STATE OF CALIFORNIA
REGIONAL WATER QUALITY CONTROL BOARD
CENTRAL COAST REGION

STAFF REPORT FOR REGULAR MEETING OF SEPTEMBER 12-13, 2013
Prepared on June 14, 2013

ITEM NUMBER:

SUBJECT: **Master Recycling Permit for Santa Lucia Community Services District, Monterey County**

STAFF CONTACT: **Tom Kukol 805-549-3689** or **tkukol@waterboards.ca.gov**

KEY INFORMATION

Facility Name:	Santa Lucia Wastewater Recycling Facility
Facility Owner:	Santa Lucia Community Services District
Location:	1 Rancho San Carlos Road, Carmel, CA
Discharge Type:	Residential and Recreational Effluent
Design Flow:	25,000 gpd
Current Flow:	13,000 gpd
Treatment Type:	Tertiary
Disposal:	None – All Wastewater is Recycled
Recycling:	Golf Course Irrigation
Existing Orders:	Board Order Nos. 98-60 and 98-61

This Action:

1. **Rescind Order No. 98-60 (Waste Discharge and Recycled Water Producer Requirements)**
2. **Rescind Order No. 98-61 (Recycled Water User Requirements)**
3. **Adopt Order No. R3-2013-0020 (Master Recycling Permit)**

SUMMARY

The Santa Lucia Preserve is a gated, residential community with a golf course. Within the Santa Lucia Preserve, the Santa Lucia Community Services District recycles residential wastewater for golf course irrigation. Due to a substantial history of effluent violations caused by unduly restrictive effluent limitations, as well as unpredicted influent characteristics, the discharger is seeking revised water reclamation requirements. The proposed Master Recycling Permit

- Permits the Santa Lucia Community Services District to
  - modify the wastewater treatment facility and
  - implement a master recycling program.

- Lowers turbidity limits to meet California Department of Public Heath requirements.

- Raises BOD and Total Suspended Solids limits to be more consistent with similar projects.

- Eliminates delivered water pH limits since controlling delivered water pH is not a reliable groundwater protection method.

- Relocates the effluent compliance monitoring point from the effluent pond inlet to the effluent pond outlet because sampling at the effluent pond outlet is more representative of the water actually recycled.

Figure 1 illustrates the project location.

Figure 1 - Santa Lucia Preserve Location

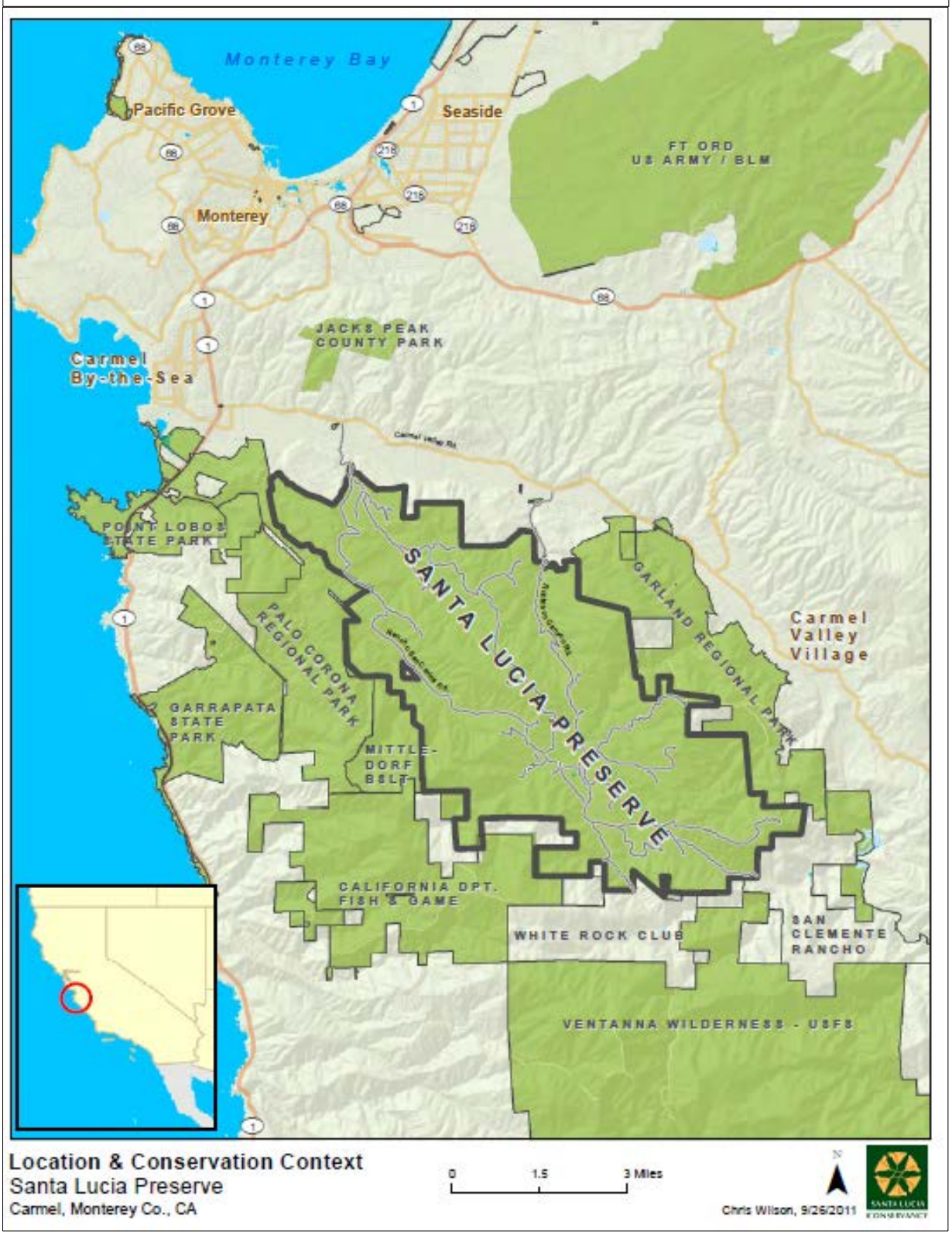

DISCUSSION

Background

The Santa Lucia Preserve is a 20,000-acre parcel located in the Santa Lucia Mountains, three miles from the Town of Carmel, seven miles from Pebble Beach, and just over nine miles from Monterey Peninsula Airport, as shown in Figure 1 - Santa Lucia Preserve Location. This land was a working cattle ranch called Rancho San Carlos for 200 years, but was sold to a limited partnership in 1990. The partnership received approval to develop 300 highly dispersed residential home sites, a unique golf "trail," and other community infrastructure, while leaving 90% of the land as open space. The Preserve Land Company, a private company representing Preserve properties, describes the Santa Lucia Preserve as, "…our own private 'national park.'"

The development also established the Santa Lucia Conservancy, which is a 501(c)(3) non-profit land trust incorporated in 1995 to conserve the ecological integrity of the protected lands within the Santa Lucia Preserve. The Conservancy has been fully endowed to protect the natural amenities of those lands in perpetuity. According to the Santa Lucia Conservancy,

> "… the Preserve design permanently protects 18,000 acres of the 20,000 acre historic "Rancho San Carlos"...The Conservancy owns approximately 10,350 acres (the "Wildlands") and holds conservation easements on an additional 7,650 acres (the "Openlands")…"

Facility Description: The Santa Lucia Community Services District (hereafter also referred to as the "Discharger") owns and operates its existing Santa Lucia Water Recycling Facility (hereafter also referred to as the "Facility," or the "Recycling Facility") to provide sanitary wastewater collection, treatment, and recycling services to the residents of the Santa Lucia Preserve, as well as to provide recycled water to the Preserve Golf Club to irrigate the golf trail.

Collection system: General WDRs, Order No. 2006-0003-DWQ, adopted May 2, 2006, apply to publicly owned sanitary sewer systems (collection systems) that are one mile or greater in length. The discharger's collection system is separately enrolled and regulated under Order No. 2006-0003-DWQ.

Order No. 2006-0003-DWQ requires collection system entities to develop a Sanitary Sewer Management Plan (SSMP). SSMPs are required to include goals; organization; legal authority; operations and maintenance program; design and performance provisions; an overflow emergency response plan; fats, oils, and greases control program; systems evaluations and capacity assurance program; monitoring, measures, and program modifications; and an SSMP Program audit. Additionally, the General WDRs require the collection system entities to report sanitary sewer overflows (SSOs). Collection system entities are required to report SSOs that are greater than 1,000 gallons. Furthermore, some entities must also report SSOs less than 1,000 gallons discharging to surface waters or storm drains or that threaten public health. Reporting provisions are set forth in the General WDRs. The Discharger reports SSOs through the Statewide Online SSO database. Reporting times vary depending on discharge amount and destination.

The Discharger's 14-mile collection system (thirteen miles of gravity sewers and one mile of forced main) currently connects about 100 homes, but will ultimately connect 300 homes. The

annual budget for collection system operation and maintenance is $214,000, with an annual capital expenditure budget of $108,000.

Because the development is sparse, the collection system must traverse long distances to connect homes. A longer collection system presents more opportunities for the entrance of groundwater (infiltration) if groundwater elevation exceeds collection pipe invert elevations. A longer collection system also presents more opportunities for the entrance of percolating surface water (inflow) into sewer pipes. Infiltration and inflow (commonly abbreviated as "I/I") can seep through defective pipe joints, cracked pipe sections, or manholes. The discharger has experienced more I/I than expected.

The collection system does not have a history of excessive overflows; however, it has an acknowledged history of I/I. During the wet season, when groundwater rises, the groundwater enters the collection system and flows to the wastewater treatment plant, stressing hydraulic capacity of the existing treatment facility. The Discharger's proposed remedy for the extreme wet season loading is to implement substantial treatment plant modifications in addition to a sewer system management plan that addresses inflow and infiltration.

Influent Wastewater: Current influent hydraulic and mass loading wastewater characteristics are shown in Table 1- Influent Hydraulic and Mass Loading Conditions.

Table 1- Current Influent Hydraulic and Mass Loading Conditions

Criteria	2009[1]	Build Out[2]	Design[3] (Phase 1)
ADWF Q_{Design}, gpd	--	50,000	25,000
ADWF $Q_{Observed}$, gpd	13,000	63,000	--
BOD_5, mg/L	490	400 to 600	250
Mass Loading, lb/day	53	260	52

[1]. Observed data
[2]. Projections for the eventual 300 homes based on observed data
[3]. Design criteria used for the existing trickling filter plant

The table shows that the average dry weather flow (ADWF) projected for project build out is approximately 25% higher than the design value. It also shows that mass loading and BOD_5 levels are higher than the initial design criteria anticipated during dry weather conditions. Additionally, peak wet weather flows of more than 82,000 GPD have been recorded. All other characteristics of the influent are similar to those anticipated by the initial design.

As can be seen from Table 2 - Raw Wastewater Chemical Quality Ranges, the projected plant flows, influent BOD, and mass loading are much higher than the plant's design level, making it increasingly difficult to meet the discharge limits.

Table 2 - Raw Wastewater Chemical Quality Ranges

Component	Units	Median Value	95th Percentile Value	Design Levels
BOD_5	mg/L	490	591	250
Mass Loading	lb/day	53	66	53
TSS	mg/L	268	728	No explicit design levels for these chemicals
TDS	mg/L	555	833	
Total N	mg/L	25	41	

Turbidity	ntu	200	510	

Figure 2 - Existing Process Flow Diagram

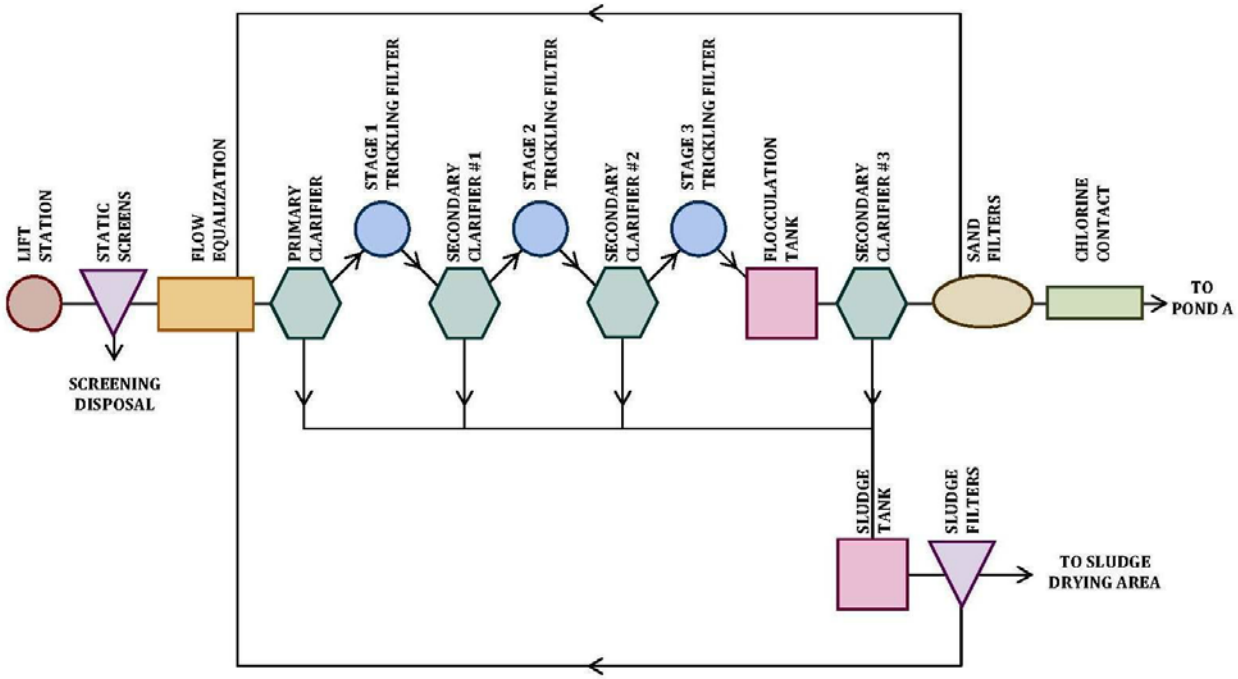

Figure 3 - Proposed WRP Process Flow

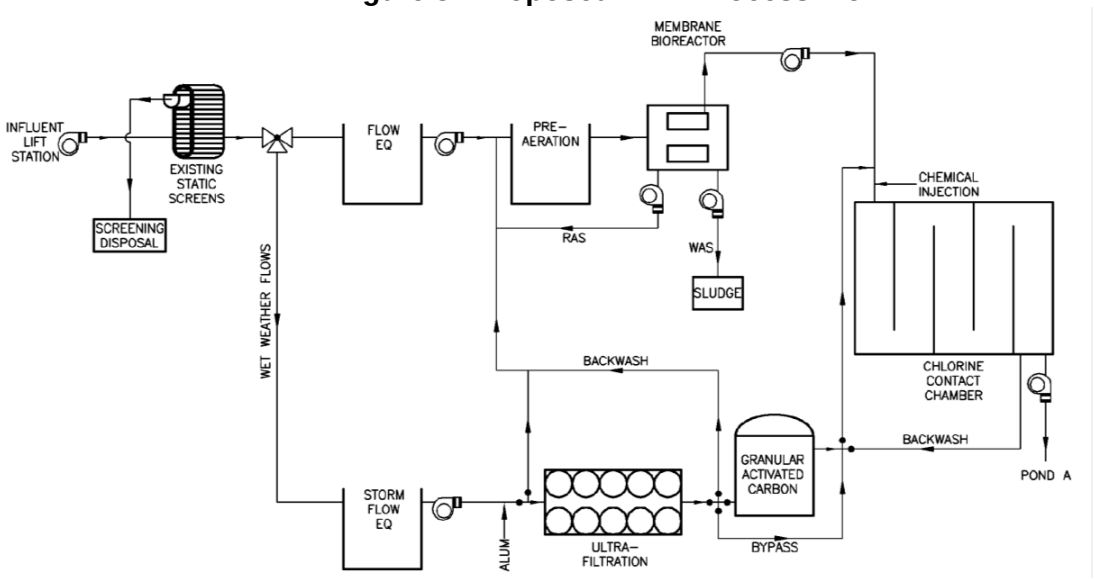

Existing Treatment: The existing wastewater treatment plant is located near the intersection of Rancho San Carlos Road and West Pronghorn Road (at latitude 36.45362 and longitude 121.80188), which is about 8.5 miles south of the Preserve's main gate. Figure 2 shows the existing process flow diagram.

The Discharger's consultant, NorthStar Engineering Group, Inc., prepared a technical report describing the existing treatment system. Their description is as follows:

> "The existing wastewater treatment plant was constructed in 1999 and consists of a headworks with static screens followed by a primary clarifier and three stages of trickling filters. The effluent from the trickling filters is pumped through sand filters, then disinfected and discharged to Pond A where it is stored for golf course irrigation. The plant operates as shown in Figure 2 - Existing Process Flow Diagram."

Proposed Treatment: Figure 3, on the previous page, shows the proposed process flow diagram. The Santa Lucia Water Recycling Facility was intended to be built in phases, with capacity added as the need arose by installing duplicate treatment units. The first phase of the Santa Lucia Water Recycling Facility proved inadequate for immediate and future needs. So, the Santa Lucia Community Services District is proposing to significantly modify the Santa Lucia Water Recycling Facility. The Discharger's consultant, NorthStar Engineering Group, Inc., prepared a technical report describing the proposed treatment system. Their description is as follows:

> "As previously noted, [Table 1- Influent Hydraulic and Mass Loading Conditions] shows that the observed flows, influent BOD, and mass loading are much higher than the facility's original design anticipated, making it increasingly difficult to meet the discharge limits. Since the observed raw wastewater characteristics are significantly different than the facility's design criteria, it is necessary to modify the current plant in order to meet the discharge criteria.
>
> The proposed treatment process consists of two parallel treatment trains to accommodate raw influent quality and quantity fluctuations associated with dry weather and wet weather periods. The dry weather process will be described first since the difference between the two processes is the addition of a parallel treatment train to the dry weather process to effectively treat wet weather flows to the WRP [Water Recycling Plant].
>
> The existing trickling filters and clarifiers will be removed and replaced with a membrane bioreactor (MBR). The MBR system has several advantages over the conventional trickling filter system currently used at the WRP. The MBR system requires a much smaller footprint since it does not require the use of clarifiers, trickling filters, or sand filters. The MBR system is also significantly easier to operate than the conventional system and less prone to upset due to flow and mass loading variations. Since the settling of sludge is not an issue, WRP adjustments and laboratory work are greatly reduced. Additionally, other than disinfection, no other treatment process is necessary after the water passes through the MBR to comply with Title 22 requirements. The retrofitted WRP will operate as shown in [Figure 3 - Proposed WRP Process Flow].
>
> Finally, WRP expansion is greatly simplified with an MBR system as development progresses and influent flow increases. The MBR system is expanded by simply adding

more membranes to the existing basins. Expanding a conventional system would involve installing additional clarifiers and filters, and would not resolve the current operational problems cause by the variations in influent characteristics.

The MBR replaces the biological and physical treatment processes that are currently provided by the trickling filters, clarifiers, and sand filters. This equipment, which currently takes up much of the space on the north end of the building (the process room), will be removed to free up space for relocating blowers for the MBR and existing sludge handling equipment. Electrical cabinets for power and controls for operating the new MBR equipment will also be located in this room. The relocation of the sludge baggers opens up the space needed for additional static screens as flows to the WRP approach build out.

Even though the MBR is less prone to upset due to flow and mass loading variations, process inefficiencies will increase during wet weather events when I&I causes influent flows to more than double. For this reason the District is installing a pretreatment train that will separate out and treat storm flows from the influent. When flows exceed ADWF rates, the pretreatment train is designed to receive screened, raw influent flows that are in excess of the main treatment system capacity. The parallel treatment train consists of ultra-filtration membranes, in combination with granular activated carbon beds, to meet discharge limits. Effluent from the parallel train will then be routed to the chlorine contact tank prior to being released to Pond A for use in golf course irrigation.

As previously mentioned, the existing facility will be retrofitted for the proposed MBR and ultra-filtration processes. To accommodate these new processes a structural addition will be constructed to house the MBR basin, the existing flow EQ basin will be converted to a storm EQ basin for wet weather flows, the existing sludge digester will be converted to a flow EQ basin, the existing sludge thickener will be converted to a pre-aeration basin, and the clarifiers will be converted to a chlorine contact chamber. During testing and prior to approval, the ultra-filtration system will be temporarily mounted on a skid outside of the treatment building. Once approval of the ultra-filtration system has been granted by CDPH, it will be relocated and installed inside the building in the location previously occupied by the sand filters."

Reliability: The Discharger's consultant, NorthStar Engineering Group, Inc., prepared a technical report describing the proposed treatment system's reliability. Their description is as follows:

"… To avoid prolonged interruption of the recycled water supply and to render the plant as a reliable source of recycled water supply, the critical plant facilities will have the reliability features required by Title 22, Division 4, Chapter 3, Article 10:

1. The SLPWRP will provide multiple treatment units capable of producing primary effluent with one unit not in operation along with long-term storage provisions.

2. The primary treatment process is provided with multiple primary treatment units capable of producing primary effluent with one unit not in operation.

3. The existing Plant is equipped with a 3-day emergency storage pond. This pond will remain available for use in case of an emergency situation to store untreated wastewater flows.

4. The secondary oxidation biological treatment unit process is provided with an alarm system, short term retention, and standby replacement equipment.

6. The aluminum sulfate feed system will be provided with standby pump, adequate chemical storage and conveyance facilities, adequate reserve chemical supply, automatic dosage control, an alarm system, short-term retention provisions, and standby replacement equipment.

7. The filtration unit process provides for automatically actuated disposal provisions. There will be a sufficient number of membrane racks in the MBR such that if one unit is being cleaned or repaired, the other operating membranes will continue to process wastewater.

8. The WRP utilizes sodium hypochlorite as the primary source for disinfectant. The disinfection system will be provided with standby pump, adequate chemical storage and conveyance facilities, adequate reserve chemical supply, automatic dosage control, an alarm system, short-term retention provisions, and standby replacement equipment.

9. The plant will be provided with a monitoring and alarm system that will alert the plant operator of the various limiting conditions for plant operation described in the preceding paragraphs. In addition, alarms for power supply failure, individual equipment failure or malfunction and high and low water levels at the critical areas will also be provided. Alarms will be both visual and audible. All alarms will be connected to a system control and data acquisition (SCADA) system which has an uninterruptable power supply rendering it unaffected by loss of power. An automatic telephone dialer is also connected to the system so that during periods when the plant is not staffed, the plant manager and other supervisorial personnel will be notified of any irregularities and alarms.

10. In spite of the reliability features to be provided, occasional shutdown of the plant will be unavoidable. Shutdown of the plant can be due to maintenance activities, upset of the treatment processes, or disinfection system failures. These shutdowns are anticipated to be infrequent and for short periods in which time the influent will be diverted to the emergency storage pond. The plant's emergency storage pond has been expanded to at least 360,000 gallons, which will accommodate more than four days of the highest peak daily wet weather flow experienced at the plant. Should the need arise to shut the plant down for more than a few hours, all flow will be diverted to the emergency storage pond until the plant is brought back online. Additionally, with two treatment processes, it is unlikely that both treatment trains will be offline at the same time. Should one need to be shut down the other will still be able to run thus reducing the flow diverted to the emergency storage pond.

    Wastewater effluent represents only a small portion of the irrigation water that is used on the golf course each year. The other sources of irrigation water include storm runoff that is collected to the ponds and well water that is pumped as necessary to supplement the other sources. Storm runoff and well water will dilute recycled strength.

11. Laboratory results for total coliform will be reported as soon as available to the plant manager or his designee. This information will be used to ensure that the maximum level of safety to public health is guaranteed. If levels exceed those allowed, actions will

immediately be taken to remedy the problem; the qualified plant manager will direct the remedial actions and generate a report of how the problem was handled."

Disposal: There will be no wastewater disposal from the plant. Instead, all treated water is stored in large ponds (described below), then recycled for golf course irrigation. The irrigation water that percolates through golf course turf enters a sand layer that includes underdrains that sit atop relatively impervious native soils. The underdrains route percolated water back to irrigation storage ponds, described below.

Recycling: The discharger proposes to recycle all effluent for golf course spray irrigation. Treated water is stored in four ponds, listed as follows:

Pond	storage capacity (acre-feet)
A	27.62
B	49.07
C1	28.14
C2	18.80

The volume of Pond A is adequate for the required 120-day storage capacity and all four ponds are lined with an impervious lining.

To limit environmental impacts and water usage at the 350-acre golf course, only 73 acres are irrigated. The developer deemed the entire golf course's native, poorly drained soils as undesirable for optimal turf conditions. So, the golf course's native soils were covered with a sand cap that included underdrain piping. The sand-capped and underdrained golf course increases percolation, enhances irrigation recapture, and ensures playability almost immediately after rainstorms. The underdrain-collect water is routed back to ample irrigation storage reservoirs (see above). This underdrained disposal/recycling area is unique with respect to water quality protection. The capture of stormwater for blending with recycled water keeps salt concentrations low. The "closed" system protects groundwater to a degree unforeseen throughout the Central Coast region. Recycled water accounts for approximately 40% of the golf trail's estimated irrigation water demand.

Stormwater: Federal Regulations for stormwater discharges require Publicly Owned Treatment Works (municipal wastewater treatment facilities) with capacity in excess of one million gallons per day, which discharge stormwater, to obtain an NPDES permit and to implement Best Available Technology Economically Achievable (BAT) and Best Conventional Pollutant Control Technology (BCT) to control pollutants in industrial stormwater discharges. This facility does not have a capacity in excess of one million gallons per day, so an NPDES permit is not necessary.

Stormwater flows from the wastewater treatment facility process areas are directed to the treatment plant head works and commingled with wastewater thus becoming wastewater. These blended flows are treated through the facility. Therefore, no industrial stormwater is discharged and separate permitting is not needed.

Receiving Water: Groundwater underlying the golf course is the receiving water most threatened by the discharge. The Santa Lucia Preserve Final Environmental Impact Report describes the hydrogeology as follows:

"Rancho San Carlos is underlain by several bedrock units, principally granitic basement rocks, continental and marine sandstones and conglomerates of the Chamisal Formation,

and marine shales and sandstones of the Monterey Formation. Geophysical and borehole data indicate that these formations extend at least several thousand feet below the land surface, or greater than the depth of any proposed water supply wells.

Unconsolidated alluvial deposits less than 100 feet deep are present along some of the creek channels. Although these deposits store and transmit groundwater more readily than the bedrock units, their contribution to the overall groundwater resources at Rancho San Carlos is small because of their limited depth and areal extent."

Groundwater is primarily found in a fractured bedrock aquifer system. Depth to first encountered groundwater is about 150 feet below the ground surface. Groundwater quality is generally good. Groundwater TDS ranges from about 300 mg/L to 500 mg/L, while groundwater sodium and chloride both range from about 50 mg/L to 100 mg/L.

The Basin Plan identifies present and anticipated beneficial uses of groundwater in the vicinity of the Santa Lucia Preserve as:

a. Domestic and Municipal Supply (MUN)
b. Agricultural Supply (AGR)
c. Industrial Process Supply (PROC)
d. Industrial Service Supply (IND)

As stated above, the groundwater threats from the water recycling operation have been minimized by the unique, underdrained design of the golf course.

Existing Order Limits: The existing waste discharge requirements established numerical limits as follows:

Constituent	**Units**	**Monthly (30-day) Average**	**Daily Maximum**
BOD, 5-Day	mg/L	5	10
Suspended Solids	mg/L	5	10
Settleable Solids	mL/L	--	0.1
Nitrate (as N)	mg/L	--	15
Total Dissolved Solids	mg/L	--	600
Sodium	mg/L	--	125
Chloride	mg/L	--	125
pH	--	$6.5 \geq pH \geq 8.4$	

The existing waste discharge requirements also established the following numerical limits:

- Reclaimed water shall be subject to a chlorine disinfection process that provides a CT (chlorine concentration times modal contact time) value of not less than 450 milligram-minutes per liter at all times with a modal contact time of at least 90 minutes, based on peak dry weather design flow.

- Turbidity of filtered wastewater shall not exceed any of the following: (a) A daily average of 2 NTU; (b) 5 NTU more than 5 percent of the time; and, (c) 10 NTU any time.

- The median number of total coliform bacteria measured in disinfected effluent discharge to the storage pond shall not exceed an MPN of 2.2 per 100 milliliters using bacteriological results of the last 7 days for which analyses have been completed. The number of total coliform bacteria shall not exceed an MPN of 23 per 100 milliliters in more than one sample in any thirty-(30) day period. No sample shall exceed an MPN of 240 total coliform bacteria per 100 milliliters.

The staff report for the existing waste discharge requirements from 1998 states that the above limits were based on staff's best professional judgment. The staff report did not elaborate further. The existing limits are unusually restrictive, without a supporting explanation.

Compliance History: Going back to 2001, our database shows over 650 effluent limit violations, summarized as follows:

Constituent/Parameter	Approximate # of Violations
Turbidity	268
BOD	102
Chloride	75
Sodium	68
Total Dissolved Solids	49
Coliform organisms	30
Suspended Solids	26
pH	8

Turbidity and Coliform: By far, the number of reported turbidity violations exceeds the number of other reported violations. In the past, the Discharger responded to turbidity violations by modifying its flocculent dosing, which better flocculated suspended solids, making them more amenable to clarification and filtration. The Discharger reported that flocculent adjustment made turbidity levels compliant with limits. That turbidity violations kept occurring was presumably attributed to the sensitivity of dosing levels amid varying waste stream qualities.

Increased turbidity reduces disinfection efficiency. Low coliform values indicate adequate disinfection. While the discharger reported hundreds of turbidity violations, the discharger reported far, far fewer coliform limit violations. It appears from the data that the turbidity violations did not usually result in disinfection violations. When coliform violations occurred, the discharger modified flocculent dosing to better flocculate suspended solids. The flocculated solids were then removed via the sand filter prior to disinfection. After flocculent adjustment, the coliform levels came back into compliance.

The existing treatment unit processes responsible for reducing turbidity consist of the clarifiers and sand filters. The proposed wastewater treatment modifications eliminate the clarifiers and sand filters in favor of membrane filtration and ultrafiltration. The Discharger believes that the membrane filtration and ultrafiltration will remedy the turbidity issues.

BOD/Suspended Solids: Natural waters contain aerobic bacteria that consume organic matter. Aerobic bacteria use a natural water's dissolved oxygen for respiration. That is, aerobic bacteria demand oxygen. Aerobic bacteria populations grow when a food source grows. The larger the aerobic bacteria population, the more oxygen is demanded. Beyond a certain point, a natural water's oxygen replenishment rate cannot support an aerobic bacteria population. In those cases, water goes anaerobic and suffers objectionable water quality impacts.

BOD and suspended solids limits are intended to keep organic matter amounts low enough so that surface water does not become anaerobic when it receives the organic matter. Typically, when proposing BOD and suspended solids limits, staff has implemented industry-standard, conservative values. However, the existing waste discharge and water recycling requirements' BOD and suspended solids limits are more stringent than limits typically imposed on a discharger. For comparison purposes, Graph 1 - BOD/Suspended Solids Limit Comparison displays BOD limits for other facilities that recycle water to land.

Graph 1 – BOD/Suspended Solids Limit Comparison

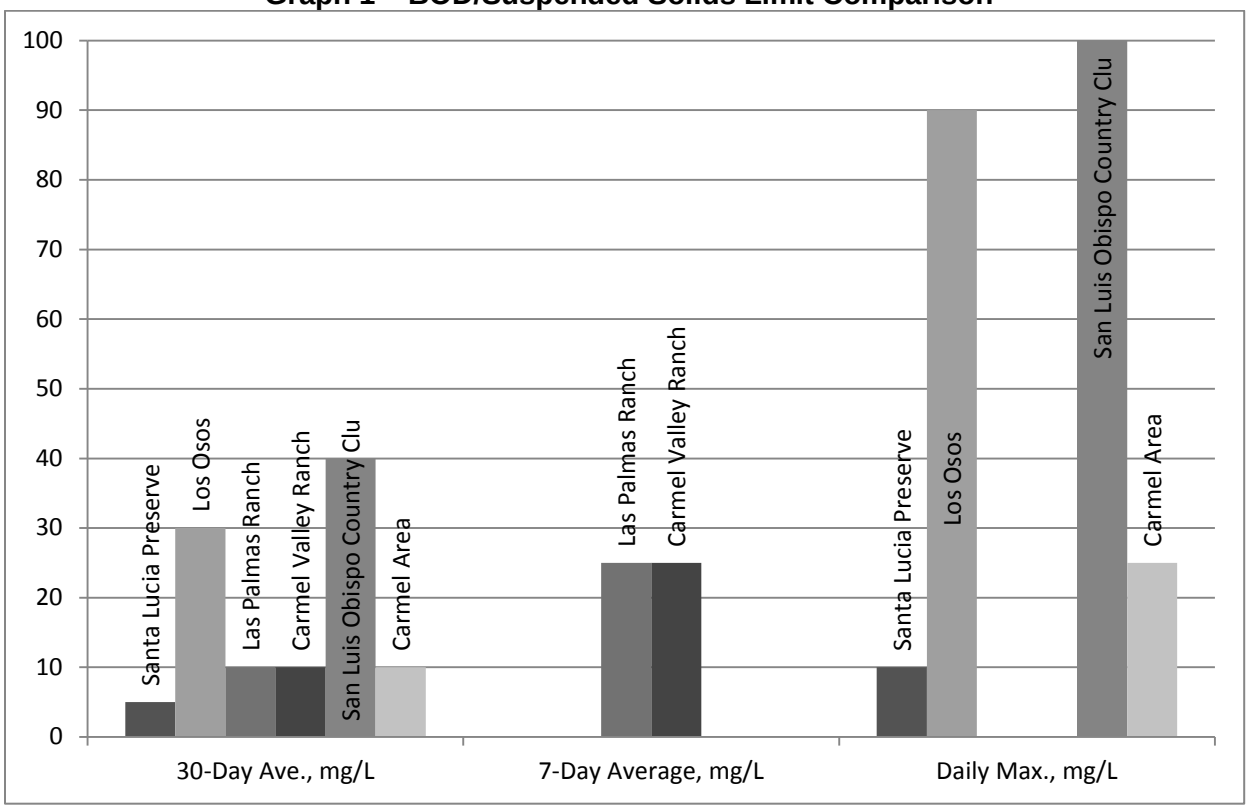

The above comparison facilities, despite having higher BOD limits, have not caused any known surface water BOD or suspended solids water quality impacts. Considering the low probability of surface water impacts, and in the absence of any identified special circumstances warranting more strict limits, it would be more reasonable and consistent to impose more typical BOD and suspended solids limits on the Santa Lucia Community Services District's discharge.

With respect to groundwater protection, there is insufficient evidence to support more stringent BOD and suspended solids limits over common limits. Staff is not aware of any groundwater impacts associated with BOD and suspended solids discharges that occur under common limits, let alone stringent limits. Discharges of BOD and suspended solids to land undergo additional treatment from the land's soils. Shallow, aerobic soils filter the solids and the soil's aerobic bacteria consume the objectionable material. In this particular case, in the unlikely event that unacceptable levels of organic material percolate beyond aerobic soil zone, the percolated organics will be collected in the golf course underdrains and returned to the irrigation system.

Salts - Total Dissolved Solids, Sodium, and Chloride: Sodium and chloride are minerals, while total dissolved solids is a gross estimator of mineral content. Waters naturally contain minerals. Sanitary wastewater typically contains natural and added inorganic mineral salts, such as

sodium and chloride. When water flows in contact with natural geologic formations, the water dissolves minerals out of the formations. That mineral-containing water is used as a water source. Sometimes, the concentration of minerals in a water source is aesthetically displeasing to a water user, so the water user decides to “soften” the water. The water softening process adds additional inorganic mineral salts to the waste stream. Then the user adds more inorganic mineral salts to the waste stream in the form of body wastes, washing water, food preparation wastes, laundry wastes, and other waste products of normal living. Inorganic salts present the most tangible threat to the receiving water (i.e., in this case, groundwater).

With respect to minerals, the regulatory goal is to maintain the receiving water’s natural mineral content. However, receiving waters can assimilate a limited amount of elevated mineral concentrations. Also, a receiving water’s mineral concentrations can be elevated without the loss of its beneficial uses. For necessary discharges, such as those required for a society to process sanitary wastewater, effluent limits should be based on the receiving water’s natural mineral content, a receiving water’s ability to assimilate a wastewater discharge, and the amount of mineral increases a receiving water can tolerate before it loses a beneficial use.

Inorganic salt removal is relatively costly. Also, disposal area soils do not appreciably prevent inorganic salts from migrating to groundwater. At present, the most cost-effective means of reducing inorganic salt discharges is to reduce the wastes generated by water softening. Water softening is typically not necessary from a human health perspective. Rather, water softening is a luxury undertaken to affect an aesthetic result. It occurs at the expense of the environment.

The environment (i.e., in this case, groundwater) has a limited capacity to assimilate inorganic mineral salts. Beyond that capacity, the groundwater will be degraded. The *Water Quality Control Plan for the Central Coastal Basin* (the Basin Plan) puts forth a strategy to monitor selected groundwaters for degradation. The strategy involves the establishment of baseline water quality to serve as a benchmark for future water quality comparisons. Baseline water quality was established by surveying a network of wells and determining their median inorganic mineral salt concentrations. Those baseline median inorganic mineral salt concentrations are found in the Basin Plan’s Table 3-8. The Basin Plan’s Table 3-8 does not include baseline median inorganic mineral salt concentrations for the receiving water underlying the proposed recycled water use area.

pH: pH is a measure of the acidity or basicity of an aqueous solution. For a surface water discharge, the effluent’s pH can directly affect the receiving water. However, a surface water discharge is not proposed.

A water’s pH readily changes in response to environmental factors. When sampling water for pH, sample holding times cannot exceed one hour if the analytical result is to be deemed representative of the waste stream sampled. Factors affecting water pH include the soil through which the water moves, and the amount of plant growth (algae) and organic material within a body of water. The pH of naturally functioning ponds varies with the time of day and season of the year. In the case of a wastewater treatment plant that discharges to a storage reservoir, then to land, the pH of a wastewater treatment plant effluent is not necessarily equal to the pH of water in the reservoir, and the pH of water in the reservoir is not necessarily equal to the pH of water that percolates through the soil. The pH of the water that percolates through soil and enters groundwater is the pH value most relevant to water quality protection. Therefore, it is unnecessary and counterproductive to limit the proposed wastewater treatment plant’s effluent pH to a neutral range.

Traditionally, that is what we have done. That practice has resulted in many pH limit violations. However, as stated above, that pH value is not the most relevant to water quality protection and is not indicative of a receiving water pH impact.

Proposed Order

The proposed order differs from the existing order. The rationale for the proposed limit changes is discussed above.

Turbidity

The existing turbidity limits came from the California Title 22 Water Recycling Criteria's §60301.320 definition of "filtered wastewater" where the wastewater has passed through a bed of filter media. As stated above, the discharger proposes to replace their clarifiers and sand filters with membrane filtration and ultrafiltration. When membrane filtration and ultrafiltration are used, California Title 22 Water Recycling Criteria's §60301.320 calls for lower turbidity limits. The following table presents the existing and Title 22 turbidity limits:

Turbidity Requirement	Daily Average (NTU)	95% of the time within a 24-hr period (NTU)	Instantaneous Maximum (NTU)
Existing	2	≤ 5	10
Proposed	--	≤ 0.2	0.5

While no daily average limit is proposed, the proposed ≤ 0.5 NTU instantaneous maximum limit requires turbidity daily average to be much less than 2.0 NTU.

BOD and Total Suspended Solids

The existing waste discharge requirements' staff report from 1998 did not justify the necessity of the adopted BOD and suspended solids limits, except to say that the limits were based on staff's "best professional judgment." Based on current staff's experience with higher limits at similar facilities and the additional, unique circumstances of this particular discharge (i.e., the dilution of sanitary wastewater with irrigation water, the relatively vast dispersal of the recycled water over a golf course, the collection and re-use of percolated water) the imposition of uncommonly stringent BOD and suspended solids limits is not necessary to protect receiving waters. The imposition of uncommonly stringent BOD and suspended solids limits results in violations that other facilities, with their more common BOD and suspended solids limits, would not experience. More traditional BOD and suspended solids limits will be sufficiently protective of water quality. Accordingly, proposed BOD and Total Suspended Solids are higher than existing limits as follows:

Constituent	Units	Monthly Average Maximum	Daily Maximum
BOD_5 ROWD	mg/L	~~5~~10	~~10~~30
Total Suspended Solids ROWD	mg/L	~~5~~10	~~10~~30

Total Coliform

The proposed total coliform bacteria limits are the same as the existing total coliform bacteria limits. Please see discussion above regarding "*Existing Order Limits*."

Salts

Typically, salts limits are derived from our Basin Plan's water quality objectives. The Basin Plan specifically says, "…application of the [Table 3-8 median water quality objectives] must be based upon consideration of the surface and ground water quality naturally present; i.e., issuance of requirements must be tempered by consideration of beneficial uses within the immediate influence of the discharge, the existing quality of receiving waters, and water quality objectives." The 1998 staff report for the existing waste discharge requirements only stated that the existing salt limits were based on "best professional judgment." The staff report did not provide a citation or technical rationale for the sodium, chloride, and total dissolved solids limits.

The proposed WDR includes several receiving water (groundwater) limitations (see WDR *Receiving Water Limitations* section, page 9). Receiving water limitations for salts are included, where concentrations in underlying groundwater cannot be significantly increased by the discharge, the discharger is required to develop upgradient and downgradient monitoring wells from the disposal area to assess impacts, if any.

The project poses relatively little threat to groundwater for the following reasons:

1. The population density is extremely sparse and the affected receiving water is relatively vast, For perspective and comparison, consider the following population densities:

   Santa Lucia Preserve..... 29 people per square mile
   San Luis Obispo ..... 3,500 people per square mile
   Santa Maria ..... 4,300 people per square mile
   Templeton..... 1,000 people per square mile
   Los Osos ..... 1,200 people per square mile

2. The recycled use area (golf course) is underdrained and plumbed back into the irrigation storage reservoirs, and

3. The golf course underdrains also collect percolated stormwater, which dilutes the accumulated recycled water

The Santa Lucia Preserve is a residential community. In residential communities, water softeners can pose a significant threat to water quality. The impacts to water quality from water softeners are dependent on the salt loading and the receiving water's assimilative capacity. At the Santa Lucia Preserve, there are about 300 homes spread over 20,000 acres. The salt loading is very low. Staff predicts negligible groundwater degradation by salts. For confirmation of staff's prediction, the proposed order requires the installation and use of a groundwater monitoring network

pH

The existing waste discharge requirements required delivered water's pH to be greater than 6.4 and less than 8.5. Historically, the Discharger sampled and reported its WWTP's effluent pH. Effluent water is not delivered water. Delivered water comes from the storage reservoir. As discussed above, a water's pH readily changes in response to environmental factors. The pH of a wastewater treatment plant effluent is not necessarily equal to the pH of water in the reservoir, and the pH of water in the reservoir is not necessarily equal to the pH of water that percolates through the golf turf and underlying soil. Because specifying effluent or delivered water pH is not a reliable control for protecting groundwater pH, staff proposes no pH limits. Although no pH

limits are proposed, golf turf grasses cannot tolerate a highly acidic or basic environment. That gives the discharger incentive to keep the irrigation water's pH relatively neutral. Also, soils typically provide a buffering capacity that would naturally insulate groundwater from pH changes.

Recycled Water Policy - Salt and Nutrient Management Plan

It is the intent of the California Recycled Water Policy that every groundwater basin/sub-basin in California will have a consistent salt/nutrient management plan. The fractured bedrock aquifer system underlying parts of the Santa Lucia Preserve recycled water use area is not specifically identified in the California Department of Water Resources' Groundwater Bulletin 118. So, the fractured bedrock aquifer system underlying parts of the Santa Lucia Preserve recycled water use area does not seem to be a groundwater basin/sub-basin that is subject to the California Recycled Water Policy's salt/nutrient management plan intentions.

While the fractured bedrock aquifer system underlying parts of the Santa Lucia Preserve recycled water use area may not be subject to the California Recycled Water Policy's salt/nutrient management plan intentions, managing salts and nutrients is important nonetheless. For reasons mentioned above, staff does not foresee significant salt impacts on groundwater. Because the WWTP treats for nitrogen, staff does not foresee the Santa Lucia CSD causing groundwater nutrient impacts. The proposed order requires the Santa Lucia CSD to implement groundwater monitoring. If groundwater monitoring indicates salt or nutrient impacts, it would not be difficult to determine the source of the impacts, due to the extremely limited contributors (i.e., the WWTP, the golf course, or the equestrian area). The proposed order will serve as a salt and nutrient management plan.

ENVIRONMENTAL SUMMARY

These waste discharge requirements are for an existing facility and are exempt from the provisions of the California Environmental Quality Act (Public Resources Code, Section 21000, et. seq.) in accordance with Section 15301, Article 19, Chapter 3, Division 6, Title 14 of the California Code of Regulations.

COMMENTS

The Central Coast Water Board distributed this staff report, the draft waste discharge requirements, and other attachments to the Discharger and known interested parties on June 18, 2013. Comments must be received by Water Board staff by July 19, 2013.

ATTACHMENTS

1. Proposed Order No. 2013-0020
2. Order No. 98-60
3. Order No. 98-61

RECOMMENDATION

Staff recommends:

1. Rescission of Order No. 98-60 (Waste Discharge and Recycled Water Producer Requirements)

2. Rescission of Order No. 98-61 (Recycled Water User Requirements)

3. Adoption of Order No. 2013-0020

TJK
126-01
CIWQS Place 255653
S:\WDR\WDR Facilities\Monterey Co\Rancho San Carlos (Santa Lucia Preserve)\2013 Revision\Staff Report_cr.docx