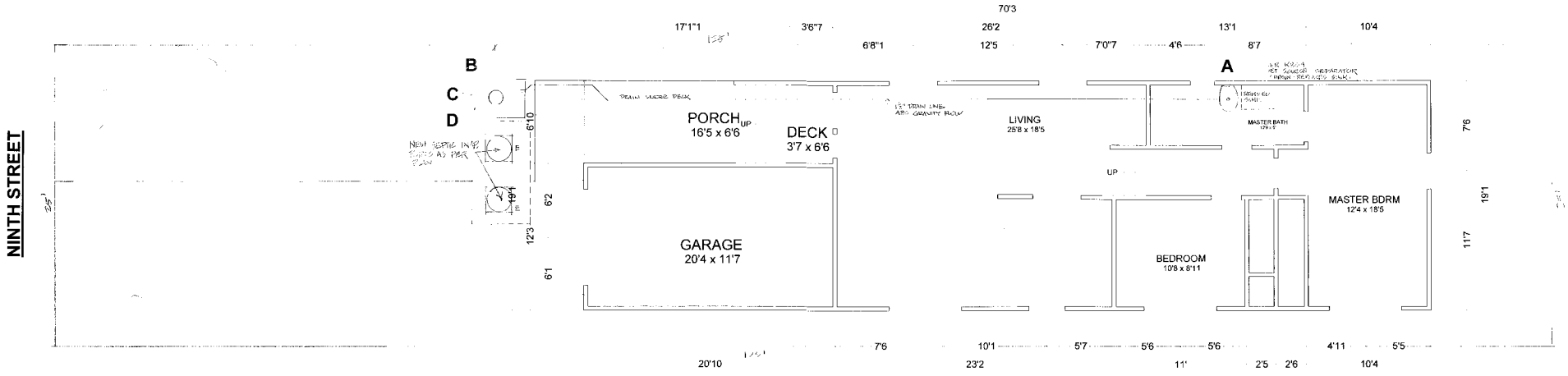

PLOT PLAN ¼ SCALE

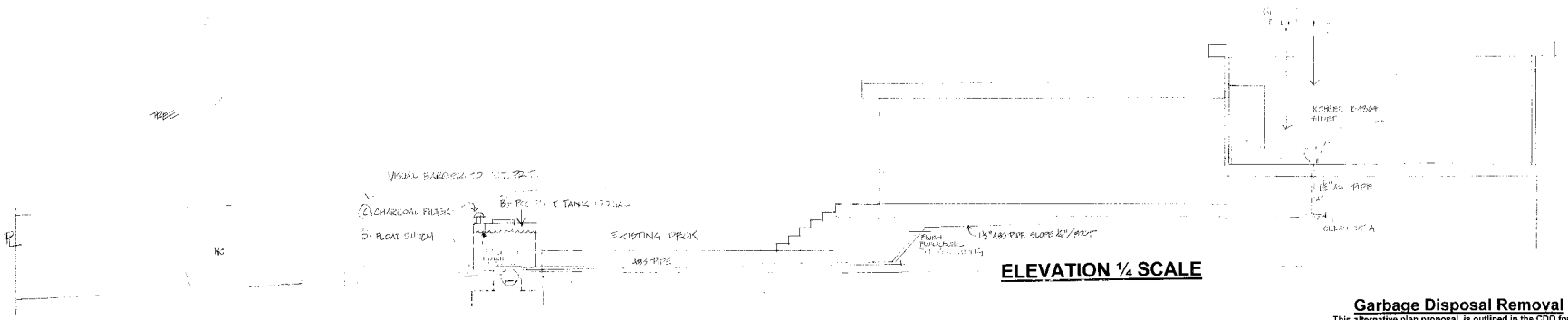

ELEVATION ¼ SCALE

B STORAGE TANK

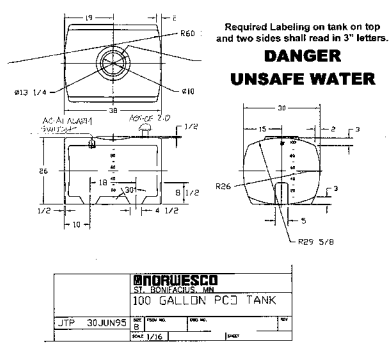

Required Labeling on tank on top and two sides shall read in 3" letters.

DANGER

UNSAFE WATER

C CHARCOAL AIR FILTER

E RETROFIT TANK PORTS

Tank ports shall be installed for continuous inspection of solids and scum thickness. Tank Shall be pumped before final inspection and every two years thereafter or when solids occupy over 18 inches in the bottom of the tank whichever comes first.

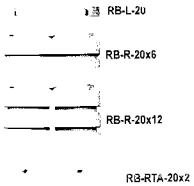

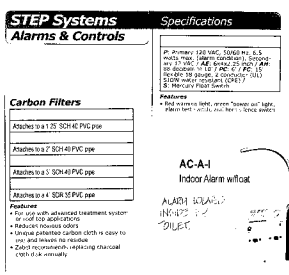

Install Zebel Alarm System as shown At 80 gallon mark on tank level.

D FLOAT SWITCH ASSEMBLY

CODES/STANDARDS APPLICABLE

Specified model meets or exceeds the following:

- *ASME/ANSI A112.19.2M*
- *IAPMO/UPC*
- *Canadian Standards Association (CSA)*
- *State of Massachusetts*

KOHLER

AMARETTO

BIDET

K-4864

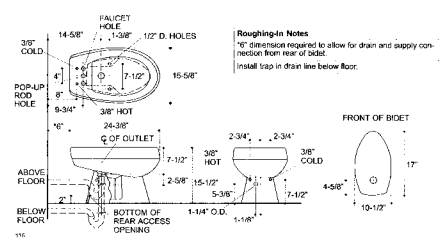

Roughing-in Notes

"6" dimension required to allow for drain and supply connection from rear of bidet.

Install trap in drain line below floor.

Garbage Disposal Removal

This alternative plan proposal is outlined in the CDO for the prohibition order in Los Osos California for individuals. AS recommended in RWQCB Resolution 83-12 this alternative shall require the removal of the garbage disposal for the period from the date of final inspection.

Deed Restriction

Conditional to final inspection, a deed restriction requiring the new owner keep the source separation plumbing system in place and garbage disposal prohibition till the prohibition is lifted by the RWQCB. A maintenance contract must be in place for urea removal at time of sale and a manual for use required.

SEPARATED SOURCE NITROGEN STORAGE PLAN FOR COMPLIANCE TO RWQCB ORDER R3-2006-R32006

TEMPORARY ALTERNATIVE MEASURES INSTALLATION

DESIGN:	[illegible]
	[illegible]
	[illegible]
OWNER:	[illegible]
	[illegible]
	[illegible]
PROJECT LOCATION:	[illegible] NINTH STREET
	LOS OSOS CA
DATE:	[illegible] **PG.** 1 **OF** **PAGES**