CALIFORNIA REGIONAL WATER QUALITY CONTROL BOARD

CENTRAL VALLEY REGION

415 Knolllcrest Drive, #100, Redding, California 96002
Phone (530) 224-4845 • Fax (530) 224-4857
http://www.waterboards.ca.gov/centralvalley

ORDER NO. R5-2010-0019
NPDES NO. CA0079081

WASTE DISCHARGE REQUIREMENTS FOR THE CITY OF CHICO CHICO WATER POLLUTION CONTROL PLANT BUTTE COUNTY

The following Discharger is subject to waste discharge requirements as set forth in this Order:

Table 1. Discharger Information

Discharger	**City of Chico**
Name of Facility	**City of Chico Water Pollution Control Plant, Chico**
Facility Address	**4827 Chico River Road**
	Chico, CA 95927
	Butte County
The U.S. Environmental Protection Agency (USEPA) and the Regional Water Quality Control Board have classified this discharge as a **major** discharge.	

The discharge by the Chico Water Pollution Control Plant from the discharge points identified below is subject to waste discharge requirements as set forth in this Order:

Table 2. Discharge Location

Discharge Point	Effluent Description	Discharge Point Latitude	Discharge Point Longitude	Receiving Water
001	Secondary treated wastewater	121 º 57' N	39 º 42' W	Sacramento River
002	Secondary treated wastewater	121 º 55' N	30º 42' W	M&T Irrigation Canal
003	Secondary treated wastewater	121 º 57' N	39 º 42' W	Sacramento River

Table 3. Administrative Information

This Order was adopted by the Regional Water Quality Control Board on:	**29 January 2010**
This Order shall become effective on:	**29 January 2010**
This Order shall expire on:	**01 January 2015**
The Discharger shall file a Report of Waste Discharge in accordance with title 23, California Code of Regulations, as application for issuance of new waste discharge requirements no later than:	**180 days prior to the Order expiration date**

THEREFORE, IT IS HEREBY ORDERED, that this Order supercedes Order No. R5-2004-0073 except for enforcement purposes, and, in order to meet the provisions contained in division 7 of the CWC (commencing with section 13000) and regulations adopted thereunder, and the provisions of the federal CWA and regulations and guidelines adopted thereunder, the Discharger shall comply with the requirements in this Order.

I, **Pamela C. Creedon**, Executive Officer, do hereby certify that this Order with all attachments is a full, true, and correct copy of an Order adopted by the California Regional Water Quality Control Board, Central Valley Region, on **29 January 2010**.

Original signed by: Kenneth D. Landau *for*

PAMELA C. CREEDON, Executive Officer

Table of Contents

I. Facility Information 4
II. Findings 4
III. Discharge Prohibitions 9
IV. Effluent Limitations and Discharge Specifications 10
A. Effluent Limitations – Discharge Point No. D-001, D-002 and D-003 10
B. Land Discharge Specifications – Not Applicable 12
C. Reclamation Specifications – Not Applicable 12
V. Receiving Water Limitations 12
A. Surface Water Limitations 12
B. Groundwater Limitations – Not Applicable 14
VI. Provisions 14
A. Standard Provisions 14
B. Monitoring and Reporting Program Requirements 18
C. Special Provisions 19
1. Reopener Provisions 19
2. Special Studies, Technical Reports and Additional Monitoring Requirements 20
3. Best Management Practices and Pollution Prevention 23
4. Construction, Operation and Maintenance Specifications 23
5. Special Provisions for Municipal Facilities (POTWs Only) 24
6. Other Special Provisions 28
7. Compliance Schedules – Not Applicable 28
VII. Compliance Determination 28

List of Tables

Table 1. Discharger Information 1
Table 2. Discharge Location 1
Table 3. Administrative Information 1
Table 4. Facility Information 4
Table 5. Basin Plan Beneficial Uses 6
Table 6. Effluent Limitations 11
Table 7. Constituent Study 22
Table 8. Salinity/EC Study 22
Table 9. Mixing Zone and Dilution Study 23

List of Attachments

Attachment A – Definitions A-1
Attachment B – Map B-1
Attachment C – Flow Schematic C-2
Attachment D – Standard Provisions D-1
Attachment E – Monitoring and Reporting Program E-1
Attachment F – Fact Sheet F-1
Attachment G – Summary of Reasonable Potential Analysis G-1
Attachment H – Calculation of WQBELs H-1
Attachment I – Effluent and Receiving Water Characterization Study I-1
Attachment J – Dioxin and Furan Sampling J-1
Attachment K – Summary of Special Studies K-1

I. FACILITY INFORMATION

The following Discharger is subject to waste discharge requirements as set forth in this Order:

Table 4. Facility Information

Discharger	**City of Chico**
Name of Facility	**Chico Water Pollution Control Plant, Chico**
Facility Address	**4827 Chico River Road**
	Chico, CA 95927
	Butte County
Facility Contact, Title, and Phone	**Marc Sulik, Wastewater Treatment Manager, 530-894-4301**
Mailing Address	**Same as Facility Address**
Type of Facility	**Publicly Owned Treatment Works**
Facility Design Flow	**12.0 million gallons per day (mgd)**

II. FINDINGS

The California Regional Water Quality Control Board, Central Valley Region (hereinafter Regional Water Board), finds:

A. Background. City of Chico (hereinafter Discharger) is currently discharging pursuant to Order No. **R5-2004-0073** and National Pollutant Discharge Elimination System (NPDES) Permit No. **CA0079081**. The Discharger submitted a Report of Waste Discharge, dated **26 November 2008,** and applied for a NPDES permit renewal to discharge up to **12 mgd** wastewater from **the Chico Water Pollution Control Plant,** hereinafter Facility. Supplemental information was requested on 11 December 2008 and received on 7 January and 27 February 2009. The application was deemed complete on 27 March 2009**.**

For the purposes of this Order, references to the “discharger” or “permittee” in applicable federal and state laws, regulations, plans, or policy are held to be equivalent to references to the Discharger herein.

B. Facility Description. The Discharger **owns and** operates **a secondary treatment wastewater treatment plant**. The treatment system consists of screening for removal of large solids, grit removal, primary clarification, activated sludge treatment with secondary clarification, and chlorination/ dechlorination. Sludge is treated by anaerobic digestion followed by mechanical dewatering using solar drying and then disposed at a sanitary landfill. Wastewater is currently discharged from Discharge Point No. D-001 (see table on cover page) to the **Sacramento River**, **a water** of the United States. The Discharger has the ability to discharge to D-002 (**M&T Canal**), however has only used this irrigation ditch discharge point once in the past 20 years. After the new diffuser is installed (D-003) the Discharger will discharge to the **Sacramento River**, approximately

1,200 feet downstream of the current diffuser. Attachment B provides a map of the area around the Facility. Attachment C provides a flow schematic of the Facility.

C. Legal Authorities. This Order is issued pursuant to section 402 of the Clean Water Act (CWA) and implementing regulations adopted by USEPA and chapter 5.5, division 7 of the California Water Code (CWC; commencing with section 13370). It shall serve as a NPDES permit for point source discharges from this facility to surface waters. This Order also serves as Waste Discharge Requirements (WDRs) pursuant to article 4, chapter 4, division 7 of the CWC (commencing with section 13260).

D. Background and Rationale for Requirements. The Regional Water Board developed the requirements in this Order based on information submitted as part of the application, through monitoring and reporting programs, and other available information. The Fact Sheet (Attachment F), which contains background information and rationale for Order requirements, is hereby incorporated into this Order and constitutes part of the Findings for this Order. Attachments A through I are also incorporated into this Order.

E. California Environmental Quality Act (CEQA). Under CWC section 13389, this action to adopt an NPDES permit is exempt from the provisions of CEQA, Public Resources Code sections 21100-21177.

F. Technology-based Effluent Limitations. Section 301(b) of the CWA and implementing USEPA permit regulations at section 122.44, title 40 of the Code of Federal Regulations (40 CFR 122.44), require that permits include conditions meeting applicable technology-based requirements at a minimum, and any more stringent effluent limitations necessary to meet applicable water quality standards. The discharge authorized by this Order must meet minimum federal technology-based requirements based on **Secondary Treatment Standards at 40 CFR Part 133 AND/OR Best Professional Judgment (BPJ) in accordance with 40 CFR 125.3**. A detailed discussion of the technology-based effluent limitations development is included in the Fact Sheet.

G. Water Quality-Based Effluent Limitations (WQBELs). Section 301(b) of the CWA and 40 CFR 122.44(d) require that permits include limitations more stringent than applicable federal technology-based requirements where necessary to achieve applicable water quality standards. **This Order contains requirements, expressed as a technology equivalence requirement, that are necessary to achieve water quality standards. The Regional Water Board has considered the factors listed in CWC section 13241 in establishing these requirements.**

40 CFR 122.44(d)(1)(i) mandates that permits include effluent limitations for all pollutants that are or may be discharged at levels that have the reasonable potential to cause or contribute to an exceedance of a water quality standard, including numeric and narrative objectives within a standard. Where reasonable potential has been established for a pollutant, but there is no numeric criterion or objective for the pollutant, WQBELs must be established using: (1) USEPA criteria guidance under CWA section 304(a), supplemented where necessary by other relevant information; (2) an indicator parameter for the pollutant of concern; or (3) a calculated numeric water quality

criterion, such as a proposed state criterion or policy interpreting the state's narrative criterion, supplemented with other relevant information, as provided in 40 CFR 122.44(d)(1)(vi).

H. Water Quality Control Plans. The Regional Water Board adopted a ***Water Quality Control Plan*, *Fourth Edition (Revised February 2007),* for the Sacramento and San Joaquin River Basins** (hereinafter Basin Plan) that designates beneficial uses, establishes water quality objectives, and contains implementation programs and policies to achieve those objectives for all waters addressed through the plan. In addition, the Basin Plan implements State Water Resources Control Board (State Water Board) Resolution No. 88-63, which established state policy that all waters, with certain exceptions, should be considered suitable or potentially suitable for municipal or domestic supply. Beneficial uses applicable to **Sacramento River** are as follows:

Table 5. Basin Plan Beneficial Uses

Discharge Point	Receiving Water Name	Beneficial Use(s)
001 / 002 / 003	Sacramento River	Existing: Municipal and domestic supply (MUN); agricultural supply, including irrigation and stock watering (AGR); industrial service supply (IND); hydropower generation (POW); water contact recreation, including canoeing and rafting (REC-1); non-contact water recreation (REC-2); warm freshwater habitat (WARM); cold freshwater habitat (COLD); migration of aquatic organisms, warm and cold (MIGR); spawning, reproduction, and/or early development, warm and cold (SPWN); wildlife habitat (WILD); and navigation (NAV).

Requirements of this Order implement the Basin Plan.

I. National Toxics Rule (NTR) and California Toxics Rule (CTR). USEPA adopted the NTR on 22 December 1992, and later amended it on 4 May 1995 and 9 November 1999. About 40 criteria in the NTR applied in California. On 18 May 2000, USEPA adopted the CTR. The CTR promulgated new toxics criteria for California and, in addition, incorporated the previously adopted NTR criteria that were applicable in the state. The CTR was amended on 13 February 2001. These rules contain water quality criteria for priority pollutants.

J. State Implementation Policy. On 2 March 2000, the State Water Board adopted the *Policy for Implementation of Toxics Standards for Inland Surface Waters, Enclosed Bays, and Estuaries of California* (State Implementation Policy or SIP). The SIP became effective on 28 April 28 2000 with respect to the priority pollutant criteria promulgated for California by USEPA through the NTR and to the priority pollutant objectives established by the Regional Water Board in the Basin Plan. The SIP became effective on 18 May 2000 with respect to the priority pollutant criteria promulgated by USEPA through the CTR. The State Water Board adopted amendments to the SIP on 24 February 2005 that became effective on 13 July 2005. The SIP establishes

implementation provisions for priority pollutant criteria and objectives and provisions for chronic toxicity control. Requirements of this Order implement the SIP.

K. Compliance Schedules and Interim Requirements. In general, an NPDES permit must include final effluent limitations that are consistent with CWA section 301 and with 40 CFR 122.44(d). There are exceptions to this general rule. The State Water Board has concluded that where the Regional Water Board's Basin Plan allows for schedules of compliance and the Regional Water Board is newly interpreting a narrative standard, it may include schedules of compliance in the permit to meet effluent limits that implement a narrative standard. See In the Matter of Waste Discharge Requirements for Avon Refinery (State Water Board Order WQ 2001-06 at pp. 53-55). See also Communities for a Better Environment et al. v. State Water Resources Control Board, 34 Cal.Rptr.3d 396, 410 (2005). The Basin Plan for the Sacramento and San Joaquin Rivers includes a provision that authorizes the use of compliance schedules in NPDES permits for water quality objectives that are adopted after the date of adoption of the Basin Plan, which was 25 September 1995 (see Basin Plan at page IV-16). Consistent with the State Water Board's Order in the CBE matter, the Regional Water Board has the discretion to include compliance schedules in NPDES permits when it is including an effluent limitation that is a "new interpretation" of a narrative water quality objective. This conclusion is also consistent with USEPA policies and administrative decisions. See, e.g., Whole Effluent Toxicity (WET) Control Policy. The Regional Water Board, however, is not required to include a schedule of compliance, but may issue a Time Schedule Order pursuant to CWC section 13300 or a Cease and Desist Order pursuant to CWC section 13301 where it finds that the discharger is violating or threatening to violate the permit. The Regional Water Board will consider the merits of each case in determining whether it is appropriate to include a compliance schedule in a permit, and, consistent with the Basin Plan, should consider feasibility of achieving compliance, and must impose a schedule that is as short as practicable to achieve compliance with the objectives, criteria, or effluent limit based on the objective or criteria.

Section 2.1 of the SIP provides that, based on a Discharger's request and demonstration that it is infeasible for an existing Discharger to achieve immediate compliance with an effluent limitation derived from a CTR criterion, compliance schedules may be allowed in an NPDES permit. Unless an exception has been granted under section 5.3 of the SIP, a compliance schedule may not exceed 5 years from the date that the permit is issued or reissued, nor may it extend beyond 10 years from the effective date of the SIP (or 18 May 2010) to establish and comply with CTR criterion-based effluent limitations. Where a compliance schedule for a final effluent limitation exceeds 1 year, the Order must include interim numeric limitations for that constituent or parameter. Where allowed by the Basin Plan, compliance schedules and interim effluent limitations or discharge specifications may also be granted to allow time to implement a new or revised water quality objective. This Order **does not** include compliance schedules or interim **effluent limitations.**

L. Alaska Rule. On 30 March 2000, USEPA revised its regulation that specifies when new and revised state and tribal water quality standards become effective for CWA purposes. (40 CFR 131.21 and 65 FR 24641 (27 April 2000).) Under the revised regulation (also known as the Alaska rule), new and revised standards submitted to

USEPA after 30 May 2000, must be approved by USEPA before being used for CWA purposes. The final rule also provides that standards already in effect and submitted to USEPA by 30 May 2000 may be used for CWA purposes, whether or not approved by USEPA.

M. Stringency of Requirements for Individual Pollutants. This Order contains both technology-based effluent limitations and WQBELs for individual pollutants. The technology-based effluent limitations consist of restrictions on BOD, TSS, flow and pH. The WQBELs consist of restrictions on **copper, chlorodibromomethane and dichlorobromomethane**. This Order's technology-based pollutant restrictions implement the minimum, applicable federal technology-based requirements. In addition, this Order includes **new** effluent limitations for **ammonia** to meet numeric objectives or protect beneficial uses. **The rationale for including these limitations is explained in the Fact Sheet. In addition, the Regional Water Board has considered the factors in CWC section 13241 in establishing these requirements.**

N. Antidegradation Policy. 40 CFR 131.12 requires that the state water quality standards include an antidegradation policy consistent with the federal policy. The State Water Board established California's antidegradation policy in State Water Board Resolution No. 68-16. Resolution No. 68-16 incorporates the federal antidegradation policy where the federal policy applies under federal law. Resolution No. 68-16 requires that existing quality of waters be maintained unless degradation is justified based on specific findings. The Regional Water Board's Basin Plan implements, and incorporates by reference, both the state and federal antidegradation policies. As discussed in detail in the Fact Sheet, the permitted discharge is consistent with the antidegradation provision of 40 CFR 131.12 and Resolution No. 68-16.

O. Anti-Backsliding Requirements. Section 303(d)(4) and sections 402(o)(2)(A) and (B)(i) of the CWA and federal regulations at 40 CFR 122.44(l) prohibit backsliding in NPDES permits. These anti-backsliding provisions require effluent limitations in a reissued permit to be as stringent as those in the previous permit, with some exceptions. **Effluent limitations in this Order are at least as stringent as the effluent limitations in Order No. R5-2004-0073.** The establishment of less stringent, or removal of, water quality based effluent limitations based on newly available information, is allowed under Sections 303(d)(4), and 402(o)(2)(A) and (B)(i) of the CWA. The establishment of less stringent, or removal of, technology based effluent limitations based on a facility upgrade is allowed under 40 CFR 122.44(l)(2)(i)(A).

P. Endangered Species Act. This Order does not authorize any act that results in the taking of a threatened or endangered species or any act that is now prohibited, or becomes prohibited in the future, under either the California Endangered Species Act (Fish and Game Code sections 2050 to 2097) or the Federal Endangered Species Act (16 U.S.C.A. sections 1531 to 1544). This Order requires compliance with effluent limits, receiving water limits, and other requirements to protect the beneficial uses of waters of the state. The discharger is responsible for meeting all requirements of the applicable Endangered Species Act.

Q. Monitoring and Reporting. 40 CFR 122.48 requires that all NPDES permits specify requirements for recording and reporting monitoring results. CWC sections 13267 and 13383 authorize the Regional Water Board to require technical and monitoring reports. The Monitoring and Reporting Program establishes monitoring and reporting requirements to implement federal and State requirements. The Monitoring and Reporting Program is provided in Attachment E.

R. Standard and Special Provisions. Standard Provisions, which apply to all NPDES permits in accordance with 40 CFR 122.41, and additional conditions applicable to specified categories of permits in accordance with 40 CFR 122.42, are provided in Attachment D. The discharger must comply with all standard provisions and with those additional conditions that are applicable under 40 CFR 122.42. The Regional Water Board has also included in this Order special provisions applicable to the Discharger. A rationale for the special provisions contained in this Order is provided in the Fact Sheet.

S. Provisions and Requirements Implementing State Law. The provisions/requirements in sections **IV.B, IV.C, V.B, and VI.C.** of this Order are included to implement state law only. These provisions/requirements are not required or authorized under the federal CWA; consequently, violations of these provisions/requirements are not subject to the enforcement remedies that are available for NPDES violations.

T. Notification of Interested Parties. The Regional Water Board has notified the Discharger and interested agencies and persons of its intent to prescribe WDRs for the discharge and has provided them with an opportunity to submit their written comments and recommendations. Details of notification are provided in the Fact Sheet of this Order.

U. Consideration of Public Comment. The Regional Water Board, in a public meeting, heard and considered all comments pertaining to the discharge. Details of the Public Hearing are provided in the Fact Sheet.

III. DISCHARGE PROHIBITIONS

A. Discharge of wastewater at a location or in a manner different from that described in the Findings is prohibited.

B. The by-pass or overflow of wastes to surface waters is prohibited, except as allowed by Federal Standard Provisions I.G. and I.H. (Attachment D).

C. Neither the discharge nor its treatment shall create a nuisance as defined in section 13050 of the CWC.

D. The Discharger shall not allow pollutant-free wastewater to be discharged into the collection, treatment, and disposal system in amounts that significantly diminish the system's capability to comply with this Order. Pollutant-free wastewater means rainfall, groundwater, cooling waters, and condensates that are essentially free of pollutants.

E. The Discharger shall not cause pollution as defined in Section 13050 of the California Water Code.

IV. EFFLUENT LIMITATIONS AND DISCHARGE SPECIFICATIONS

A. Effluent Limitations – Discharge Point No. D-001, D-002 and D-003

1. Final Effluent Limitations – Discharge Point No. No. D-001, D-002, and D-003

a. The Discharger shall maintain compliance with the following effluent limitations at Discharge Point No. **D-001, D-002, and D-003**, with compliance measured at Monitoring Location **EFF-001** as described in the Monitoring and Reporting Program:

Table 6. Effluent Limitations

Parameter	Units	Effluent Limitations				
		Average Monthly	Average Weekly	Maximum Daily	Instantaneous Minimum	Instantaneous Maximum
Biochemical Oxygen Demand[1]	mg/L	30	45	90		
	lbs/day[2]	3002	4504	9007		
Total Suspended Solids	mg/L	30	45	90		
	lbs/day[2]	3002	4504	9007		
Total Residual Chlorine	mg/L	--	0.01[3]	0.02[4]		
Total Coliform Organisms	MPN/100 mL	23		500		
pH	standard units				6.0	9.0
Ammonia	mg/L	21.29		42.71		
Average Dry Weather Flow (July-Sept)	mgd	12.0	--	--	--	--
Discharge D-001 and D-003						
Total Recoverable Copper	ug/L	81.00		160.00		
Chlorodibromomethane	ug/L	29.45		48.46		
Dichlorobromomethane	ug/L	41.04		78.28		
Discharge D-002 (April 15 through December 15)						
Total Recoverable Copper	ug/L	13.00		26.00		
Chlorodibromomethane	ug/L	1.68		2.77		
Dichlorobromomethane	ug/L	1.83		3.50		
Discharge D-002 (December 16 through April 14)						
Total Recoverable Copper	ug/L	3.30		6.70		
Chlorodibromomethane	ug/L	0.41		0.68		
Dichlorobromomethane	ug/L	0.56		1.07		

[1] 5-day, 20°C Biochemical Oxygen Demand (BOD)
[2] Based upon a design dry weather treatment capacity of 12.0 mgd, applicable from July through September
[3] 4-day average
[4] 1-hour average

b. **Percent Removal.** The average monthly percent removal of 5-day biochemical oxygen demand (BOD_5) and total suspended solids (TSS) shall not be less than 85 percent.

c. **Acute Whole Effluent Toxicity.** Survival of aquatic organisms in 96-hour bioassays of undiluted waste shall be no less than:

   i. 70%, minimum for any one bioassay; and
   ii. 90%, median for any three consecutive bioassays.

d. **Average Dry Weather Flow.** The average dry weather discharge flow (July – September) shall not exceed **12.0 mgd**.

2. Interim Effluent Limitations – Not Applicable

B. Land Discharge Specifications – Not Applicable

C. Reclamation Specifications – Not Applicable

V. RECEIVING WATER LIMITATIONS

A. Surface Water Limitations

Receiving water limitations are based on water quality objectives contained in the Basin Plan and are a required part of this Order. The discharge shall not cause the following in **Sacramento River:**

1. **Bacteria.** The fecal coliform concentration, based on a minimum of not less than five samples for any 30-day period, to exceed a geometric mean of 200 MPN/100 mL, nor more than 10 percent of the total number of fecal coliform samples taken during any 30-day period to exceed 400 MPN/100 mL.

2. **Biostimulatory Substances.** Water to contain biostimulatory substances which promote aquatic growths in concentrations that cause nuisance or adversely affect beneficial uses.

3. **Chemical Constituents.** Chemical constituents to be present in concentrations that adversely affect beneficial uses.

4. **Color.** Discoloration that causes nuisance or adversely affects beneficial uses.

5. **Dissolved Oxygen:**

   a. The 95 percentile dissolved oxygen concentration to fall below 75 percent of saturation; nor

   b. The dissolved oxygen concentration to be reduced below **7.0** mg/L at any time.

6. **Floating Material.** Floating material to be present in amounts that cause nuisance or adversely affect beneficial uses.

7. **Oil and Grease.** Oils, greases, waxes, or other materials to be present in concentrations that cause nuisance, result in a visible film or coating on the surface of the water or on objects in the water, or otherwise adversely affect beneficial uses.

8. **pH.** The pH to be depressed below 6.5, raised above **8.5**, nor changed by more than **0.5** units. **A 1-month averaging period may be applied when calculating the pH change of 0.5.**

9. **Pesticides:**

   a. Pesticides to be present, individually or in combination, in concentrations that adversely affect beneficial uses;

   b. Pesticides to be present in bottom sediments or aquatic life in concentrations that adversely affect beneficial uses;

   c. Total identifiable persistent chlorinated hydrocarbon pesticides to be present in the water column at concentrations detectable within the accuracy of analytical methods **approved by the USEPA or the Executive Officer** ;

   d. Pesticide concentrations to exceed those allowable by applicable antidegradation policies (see State Water Board Resolution No. 68-16 and 40 CFR 131.12

   e. Pesticide concentrations to exceed the lowest levels technically and economically achievable;

   f. Pesticides to be present in concentration in excess of the maximum contaminant levels **set forth in CCR, Title 22, division 4, chapter 15**; nor

   g. Thiobencarb to be present in excess of 1.0 µg/L.

10. **Radioactivity:**

   a. Radionuclides to be present in concentrations that are **harmful** to human, plant, animal, or aquatic life nor that result in the accumulation of radionuclides in the food web to an extent that presents a hazard to human, plant, animal, or aquatic life.

   b. Radionuclides to be present in excess of the maximum contaminant levels specified in Table 4 (MCL Radioactivity) of Section 64443 of Title 22 of the California Code of Regulations**.**

11. **Suspended Sediments.** The suspended sediment load and suspended sediment discharge rate of surface waters to be altered in such a manner as to cause nuisance or adversely affect beneficial uses.

12. **Settleable Substances.** Substances to be present in concentrations that result in the deposition of material that causes nuisance or adversely affects beneficial uses.

13. **Suspended Material.** Suspended material to be present in concentrations that cause nuisance or adversely affect beneficial uses.

14. **Taste and Odors.** Taste- or odor-producing substances to be present in concentrations that impart undesirable tastes or odors to fish flesh or other edible products of aquatic origin, **or that cause nuisance, or otherwise adversely affect beneficial uses**.

15. **Temperature.** The natural temperature to be increased by more than 5°F.

16. **Toxicity.** Toxic substances to be present, individually or in combination, in concentrations that produce detrimental physiological responses in human, plant, animal, or aquatic life.

17. **Turbidity.** The turbidity to increase as follows:

    a. Where natural turbidity is less than 1 Nephelometric Turbidity Unit (NTU), controllable factors shall not cause downstream turbidity to exceed 2 NTUs;

    b. Where natural turbidity is between 1 and 5 NTUs, increases shall not exceed 1 NTU;

    c. Where natural turbidity is between 5 and 50 NTUs, increases shall not exceed 20 percent;

    d. Where natural turbidity is between 50 and 100 NTUs, increases shall not exceed 10 NTUs; nor

    e. Where natural turbidity is greater than 100 NTUs, increases shall not exceed 10 percent.

B. Groundwater Limitations – Not Applicable

VI. PROVISIONS

A. Standard Provisions

1. The Discharger shall comply with all Standard Provisions (federal NPDES standard conditions from 40 CFR Part 122) included in Attachment D of this Order.

2. The Discharger shall comply with the following provisions:

    a. If the Discharger's wastewater treatment plant is publicly owned or subject to regulation by California Public Utilities Commission, it shall be supervised and operated by persons possessing certificates of appropriate grade according to Title 23, CCR, division 3, chapter 26.

    b. After notice and opportunity for a hearing, this Order may be terminated or modified for cause, including, but not limited to:

        i. violation of any term or condition contained in this Order;

        ii. obtaining this Order by misrepresentation or by failing to disclose fully all relevant facts;

        iii. a change in any condition that requires either a temporary or permanent reduction or elimination of the authorized discharge; and

iv. a material change in the character, location, or volume of discharge.

The causes for modification include:

- *New regulations.* New regulations have been promulgated under section 405(d) of the CWA, or the standards or regulations on which the permit was based have been changed by promulgation of amended standards or regulations or by judicial decision after the permit was issued.

- *Land application plans.* When required by a permit condition to incorporate a land application plan for beneficial reuse of sewage sludge, to revise an existing land application plan, or to add a land application plan.

- *Change in sludge use or disposal practice.* Under 40 CFR 122.62(a)(1), a change in the Discharger's sludge use or disposal practice is a cause for modification of the permit. It is cause for revocation and reissuance if the Discharger requests or agrees.

The Regional Water Board may review and revise this Order at any time upon application of any affected person or the Regional Water Board's own motion.

c. If a toxic effluent standard or prohibition (including any scheduled compliance specified in such effluent standard or prohibition) is established under section 307(a) of the CWA, or amendments thereto, for a toxic pollutant that is present in the discharge authorized herein, and such standard or prohibition is more stringent than any limitation upon such pollutant in this Order, the Regional Water Board will revise or modify this Order in accordance with such toxic effluent standard or prohibition.

The Discharger shall comply with effluent standards and prohibitions within the time provided in the regulations that establish those standards or prohibitions, even if this Order has not yet been modified.

d. This Order shall be modified, or alternately revoked and reissued, to comply with any applicable effluent standard or limitation issued or approved under sections 301(b)(2)(C) and (D), 304(b)(2), and 307(a)(2) of the CWA, if the effluent standard or limitation so issued or approved:

i. contains different conditions or is otherwise more stringent than any effluent limitation in the Order; or

ii. controls any pollutant limited in the Order.

The Order, as modified or reissued under this paragraph, shall also contain any other requirements of the CWA then applicable.

e. The provisions of this Order are severable. If any provision of this Order is found invalid, the remainder of this Order shall not be affected.

f. The Discharger shall take all reasonable steps to minimize any adverse effects to waters of the State or users of those waters resulting from any discharge or sludge use or disposal in violation of this Order. Reasonable steps shall include such accelerated or additional monitoring as necessary to determine the nature and impact of the non-complying discharge or sludge use or disposal.

g. The Discharger shall ensure compliance with any existing or future pretreatment standard promulgated by USEPA under section 307 of the CWA, or amendment thereto, for any discharge to the municipal system.

h. A copy of this Order shall be maintained at the discharge facility and be available at all times to operating personnel. Key operating personnel shall be familiar with its content.

i. Safeguard to electric power failure:

i. The Discharger shall provide safeguards to assure that, should there be reduction, loss, or failure of electric power, the discharge shall comply with the terms and conditions of this Order.

ii. Upon written request by the Regional Water Board the Discharger shall submit a written description of safeguards. Such safeguards may include alternate power sources, standby generators, retention capacity, operating procedures, or other means. A description of the safeguards provided shall include an analysis of the frequency, duration, and impact of power failures experienced over the past 5 years on effluent quality and on the capability of the Discharger to comply with the terms and conditions of the Order. The adequacy of the safeguards is subject to the approval of the Regional Water Board.

iii. Should the treatment works not include safeguards against reduction, loss, or failure of electric power, or should the Regional Water Board not approve the existing safeguards, the Discharger shall, within 90 days of having been advised in writing by the Regional Water Board that the existing safeguards are inadequate, provide to the Regional Water Board and USEPA a schedule of compliance for providing safeguards such that in the event of reduction, loss, or failure of electric power, the Discharger shall comply with the terms and conditions of this Order. The schedule of compliance shall, upon approval of the Regional Water Board, become a condition of this Order.

j. The Discharger, upon written request of the Regional Water Board, shall file with the Board a technical report on its preventive (failsafe) and contingency (cleanup) plans for controlling accidental discharges, and for minimizing the effect of such events. This report may be combined with that required under Regional Water Board Standard Provision contained in section VI.A.2.i. of this Order.

The technical report shall:

i. Identify the possible sources of spills, leaks, untreated waste by-pass, and contaminated drainage. Loading and storage areas, power outage, waste treatment unit outage, and failure of process equipment, tanks and pipes should be considered.

ii. Evaluate the effectiveness of present facilities and procedures and state when they became operational.

iii. Predict the effectiveness of the proposed facilities and procedures and provide an implementation schedule containing interim and final dates when they will be constructed, implemented, or operational.

The Regional Water Board, after review of the technical report, may establish conditions which it deems necessary to control accidental discharges and to minimize the effects of such events. Such conditions shall be incorporated as part of this Order, upon notice to the Discharger.

k. A publicly owned treatment works whose waste flow has been increasing, or is projected to increase, shall estimate when flows will reach hydraulic and treatment capacities of its treatment and disposal facilities. The projections shall be made in January, based on the last 3 years' average dry weather flows, peak wet weather flows and total annual flows, as appropriate. When any projection shows that capacity of any part of the facilities may be exceeded in 4 years, the Discharger shall notify the Regional Water Board by 31 January. A copy of the notification shall be sent to appropriate local elected officials, local permitting agencies and the press. Within 120 days of the notification, the Discharger shall submit a technical report showing how it will prevent flow volumes from exceeding capacity or how it will increase capacity to handle the larger flows. The Regional Water Board may extend the time for submitting the report.

l. The Discharger shall submit technical reports as directed by the Executive Officer. All technical reports required herein that involve planning, investigation, evaluation, or design, or other work requiring interpretation and proper application of engineering or geologic sciences, shall be prepared by or under the direction of persons registered to practice in California pursuant to California Business and Professions Code, sections 6735, 7835, and 7835.1. To demonstrate compliance with Title 16, CCR, sections 415 and 3065, all technical reports must contain a statement of the qualifications of the responsible registered professional(s). As required by these laws, completed technical reports must bear the signature(s) and seal(s) of the registered professional(s) in a manner such that all work can be clearly attributed to the professional responsible for the work.

m. The Regional Water Board is authorized to enforce the terms of this permit under several provisions of the CWC, including, but not limited to, sections 13385, 13386, and 13387.

n. For publicly owned treatment works, prior to making any change in the point of discharge, place of use, or purpose of use of treated wastewater that results in a decrease of flow in any portion of a watercourse, the Discharger must file a petition with the State Water Board, Division of Water Rights, and receive approval for such a change. (CWC section 1211).

o. In the event the Discharger does not comply or will be unable to comply for any reason, with any prohibition, maximum daily effluent limitation, 1-hour average effluent limitation, or receiving water limitation contained in this Order, the Discharger shall notify the Regional Water Board by telephone (916) 464-3291 within 24 hours of having knowledge of such noncompliance, and shall confirm this notification in writing within 5 days, unless the Regional Water Board waives confirmation. The written notification shall include the information required by the Standard Provision contained in Attachment D section V.E.1.
[40 CFR 122.41(l)(6)(i)].

p. Failure to comply with provisions or requirements of this Order, or violation of other applicable laws or regulations governing discharges from this facility, may subject the Discharger to administrative or civil liabilities, criminal penalties, and/or other enforcement remedies to ensure compliance. Additionally, certain violations may subject the Discharger to civil or criminal enforcement from appropriate local, state, or federal law enforcement entities.

q. In the event of any change in control or ownership of land or waste discharge facilities presently owned or controlled by the Discharger, the Discharger shall notify the succeeding owner or operator of the existence of this Order by letter, a copy of which shall be immediately forwarded to the Regional Water Board.

To assume operation under this Order, the succeeding owner or operator must apply in writing to the Executive Officer requesting transfer of the Order. The request must contain the requesting entity's full legal name, the state of incorporation if a corporation, address and telephone number of the persons responsible for contact with the Regional Water Board and a statement. The statement shall comply with the signatory and certification requirements in the federal Standard Provisions (Attachment D, section V.B) and state that the new owner or operator assumes full responsibility for compliance with this Order. Failure to submit the request shall be considered a discharge without requirements, a violation of the CWC. Transfer shall be approved or disapproved in writing by the Executive Officer.

B. Monitoring and Reporting Program Requirements

The Discharger shall comply with the Monitoring and Reporting Program, and future revisions thereto, in Attachment E of this Order.

C. Special Provisions

1. Reopener Provisions

a. Conditions that necessitate a major modification of a permit are described in 40 CFR 122.62, including:

i. If new or amended applicable water quality standards are promulgated or approved pursuant to section 303 of the CWA, or amendments thereto, this permit may be reopened and modified in accordance with the new or amended standards.

ii. When new information, that was not available at the time of permit issuance, would have justified different permit conditions at the time of issuance.

b. This Order may be reopened for modification, or revocation and reissuance, as a result of the detection of a reportable priority pollutant generated by special conditions included in this Order. These special conditions may be, but are not limited to, fish tissue sampling, whole effluent toxicity, monitoring requirements on internal waste stream(s), and monitoring for surrogate parameters. Additional requirements may be included in this Order as a result of the special condition monitoring data.

c. **Mercury.** If mercury is found to be causing toxicity based on acute or chronic toxicity test results, or if a TMDL program is adopted, this Order shall be reopened and the interim mass effluent limitation modified (higher or lower) or an effluent concentration limitation imposed. If the Regional Water Board determines that a mercury offset program is feasible for Dischargers subject to a NPDES permit, then this Order may be reopened to reevaluate the interim mercury mass loading limitation(s) and the need for a mercury offset program for the Discharger.

d. **Pollution Prevention.** This Order requires the Discharger prepare pollution prevention plans following CWC section 13263.3(d)(3) for **copper, chlorodibromomethane and dichlorobromomethane**. Based on a review of the pollution prevention plans, this Order may be reopened for addition and/or modification of effluent limitations and requirements for these constituents.

e. **Whole Effluent Toxicity.** As a result of a Toxicity Reduction Evaluation (TRE), this Order may be reopened to include a chronic toxicity limitation, a new acute toxicity limitation, and/or a limitation for a specific toxicant identified in the TRE. Additionally, if the State Water Board revises the SIP's toxicity control provisions that would require the establishment of numeric chronic toxicity effluent limitations, this Order may be reopened to include a numeric chronic toxicity effluent limitation based on the new provisions.

f. **Water Effects Ratios (WER) and Metal Translators.** A default WER of 1.0 has been used in this Order for calculating CTR criteria for applicable priority pollutant inorganic constituents. In addition, default dissolved-to-total metal translators have been used to convert water quality objectives from dissolved to total recoverable when developing effluent limitations for **copper, chlorodibromomethane and dichlorobromomethane** . If the Discharger performs studies to determine site-specific WERs and/or site-specific dissolved-to-total metal translators, this Order may be reopened to modify the effluent limitations for the applicable inorganic constituents.

g. **Constituent Study.** If after review of the study results it is determined that the discharge has reasonable potential to cause or contribute to an exceedance of a water quality objective this Order may be reopened and effluent limitations added for the subject constituents.

h. **Salinity/EC Site-Specific Studies.** This Order requires the Discharger to complete and submit a report on the results of salinity/EC site-specific studies to determine appropriate salinity/EC levels necessary to protect downstream beneficial uses. The studies shall be completed and submitted to the Regional Water Board as specified in section VI.C.2.d of this Order. Based on a review of the results of the report on the salinity/EC site-specific studies this Order may be reopened for addition and or modification of an effluent limitation and requirements for salinity and/or EC.

i. **Mixing Zone and Dilution Study.** This Order requires the Discharger to conduct a mixing zone and dilution study to determine the actual mixing zone and dilution that is achievable in the receiving water from the new diffuser. The dilution credit included in this Order is based on modeling and is consistent with the last two permit cycles. Based on the new study, this Order may be reopened for modification of effluent limits and requirements for **copper, chlorodibromomethane and dichlorobromomethane.**

2. Special Studies, Technical Reports and Additional Monitoring Requirements

a. **Chronic Whole Effluent Toxicity.** The Basin Plan contains a narrative toxicity objective that states, "*All waters shall be maintained free of toxic substances in concentrations that produce detrimental physiological responses in human, plant, animal, or aquatic life.*" (Basin Plan at page III-8.00. Based on whole effluent chronic toxicity testing performed by the Discharger from December 2004 through May 2009, the discharge does not have reasonable potential to cause or contribute to an in-stream excursion above of the Basin Plan's narrative toxicity objective.

The Monitoring and Reporting Program of this Order requires chronic WET monitoring for demonstration of compliance with the narrative toxicity objective. In addition to WET monitoring, this provision requires the Discharger to submit to the Regional Water Board an Initial Investigative TRE Workplan for approval by

the Executive Officer, to ensure the Discharger has a plan to immediately move forward with the initial tiers of a TRE, in the event effluent toxicity is encountered in the future. The provision also includes a numeric toxicity monitoring trigger, requirements for accelerated monitoring, and requirements for TRE initiation if a pattern of toxicity is demonstrated.

Monitoring Trigger. A numeric toxicity monitoring trigger of **> 10** TUc (where TUc = 100/NOEC) is applied in the provision, because this Order does allow dilution for the chronic condition. Minimum dilution credit to be applied is 47 parts of receiving water to 1 part effluent resulting in a theoretical allowance TUc of 47. The discharge showed no chronic toxicity at 100% effluent during the past permitted cycle. Therefore, based on best professional judgment, a cap of 10 to 1 dilution has been applied, and a monitoring trigger of greater than 10 TUc has been applied..

Accelerated Monitoring. The provision requires accelerated WET testing when a regular WET test result exceeds the monitoring trigger. The purpose of accelerated monitoring is to determine, in an expedient manner, whether there is a pattern of toxicity before requiring the implementation of a TRE. Due to possible seasonality of the toxicity, the accelerated monitoring should be performed in a timely manner, preferably taking no more than 2 to 3 months to complete.

The provision requires accelerated monitoring consisting of four chronic toxicity tests in a six-week period (i.e., one test every two weeks) using the species that exhibited toxicity. Guidance regarding accelerated monitoring and TRE initiation is provided in the *Technical Support Document for Water Quality-based Toxics Control,* EPA/505/2-90-001, March 1991 (TSD). The TSD at page 118 states, "*EPA recommends if toxicity is repeatedly or periodically present at levels above effluent limits more than 20 percent of the time, a TRE should be required.*" Therefore, four accelerated monitoring tests are required in this provision. If no toxicity is demonstrated in the four accelerated tests, then it demonstrates that toxicity is not present at levels above the monitoring trigger more than 20 percent of the time (only 1 of 5 tests are toxic, including the initial test). However, notwithstanding the accelerated monitoring results, if there is adequate evidence of a pattern of effluent toxicity (i.e. toxicity present exceeding the monitoring trigger more than 20 percent of the time), the Executive Officer may require that the Discharger initiate a TRE.

See the WET Accelerated Monitoring Flow Chart (Figure F-1, Fact Sheet), for further clarification of the accelerated monitoring requirements and for the decision points for determining the need for TRE initiation.

b. **Constituent Study.** There are indications that the discharge may contain constituents that have a reasonable potential to cause or contribute to an exceedance of water quality objectives: **copper, chlorodibromomethane and dichlorobromomethane**. The Discharger shall comply with the following time

schedule in conducting a study of these constituents' potential effect in surface waters:

Table 7. Constituent Study

Task	Compliance Date
i. Submit Workplan and Time Schedule	**Within 6 months** of the effective date of Order
ii. Begin Study	Within **3 months** of Regional Board approval of Workplan and Time Schedule
iii. Complete Study	As established by Task 1
iv. Submit Study Report	**60 days** following completion of Task 3 (no greater than 2 years after the effective date of this Order)

c. Salinity/EC Site-Specific Study. The Discharger shall complete and submit a report on the results of a site-specific investigation of appropriate effluent salinity/EC levels to protect the beneficial use of municipal and domestic use in the vicinity of the discharge. The study shall determine local drinking water intakes. Based on these factors, the study shall recommend site-specific numeric values for salinity/EC that fully protect **Sacramento River**'s municipal and domestic use designation. The Regional Water Board will evaluate the recommendations, select appropriate values, reevaluate reasonable potential for salinity/EC, and reopen the permit, as necessary, to include appropriate effluent limitations for salinity. The Discharger shall comply with the following time

Table 8. Salinity/EC Study

Task	Compliance Date
1 - Submit Work plan and Time Schedule	**Within 6 months** of the effective date of the Order
2 - Begin Study	Within **3 months** of Regional Board approval of Workplan and Time Schedule
3 - Complete Study	As established by Task 1
4 - Submit Summary Report	**60 days** following completion of Task 3 (no greater than 2 years after the effective date of this Order)

d. Mixing Zone and Dilution Study. The mixing zone and dilution study is required to determine the actual mixing and dilution that is achievable in the receiving water from the new diffuser.

Table 9. Mixing Zone and Dilution Study

Task	Compliance Date
1 -Submit technical report: work plan and schedule for mixing zone and dilution study	**Within 6 months** following Order adoption
2 -Commence mixing zone and dilution study	**30 days** following Executive Officer approval of Task 1.
3 -Complete mixing zone and dilution study	As established by Task 1 and/or 2 years following Task 2, whichever is sooner
4 -Submit technical report: mixing zone and dilution study	**60 days** following completion of Task 3.

3. Best Management Practices and Pollution Prevention

a. Pollution Prevention Plan for copper, chlorodibromomethane and dichlorobromomethane. The Discharger shall prepare and implement a pollution prevention plan for **copper, chlorodibromomethane and dichlorobromomethane** in accordance with **CWC section 13263.3(d)(3)**. The minimum requirements for the pollution prevention plan are outlined in the Fact Sheet (Attachment F section VII.B.3.a). **A workplan and time schedule for preparation of the pollution prevention plan shall be completed and submitted within six months of the effective date of this Order for approval by the Executive Officer. The pollution prevention plan shall be completed and submitted to the Regional Water Board no greater than two years after the effective date of this Order. Progress reports shall be submitted in accordance with the Monitoring and Reporting Program (Attachment E section X.D.1.)**

b. Salinity Reduction Goal. The Discharger shall provide annual reports demonstrating reasonable progress in the reduction of salinity in its discharge to **Sacramento River**. The annual reports shall be submitted in accordance with the Monitoring and Reporting Program (Attachment E, section X.D.1).

4. Construction, Operation and Maintenance Specifications

a. Emergency Storage Pond Operating Requirements.

i. The emergency storage pond shall be designed, constructed, operated, and maintained to prevent inundation or washout due to floods with a 100-year return frequency.

ii. Public contact with wastewater shall be precluded through such means as fences, signs, and other acceptable alternatives.

iii. Ponds shall be managed to prevent breeding of mosquitoes. In particular,

(a) An erosion control program should assure that small coves and irregularities are not created around the perimeter of the water surface.

(b) Weeds shall be minimized.

(c) Dead algae, vegetation, and debris shall not accumulate on the water surface.

iv. Freeboard in the emergency storage ponds shall not be less than 2 feet (measured vertically to the lowest point of overflow), except if lesser freeboard does not threaten the integrity of the pond, no overflow of the pond occurs, and lesser freeboard is due to direct precipitation or storm water runoff occurring as a result of annual precipitation with greater than a 100-year recurrence interval, or a storm event with an intensity greater than a 25-year, 24-hour storm event.

v. The discharge of waste classified as “hazardous” as defined in section 2521(a) of Title 23, California Code of Regulations (CCR), or “designated”, as defined in section 13173 of the CWC, to the treatment ponds is prohibited.

vi. Objectionable odors originating at this Facility shall not be perceivable beyond the limits of the wastewater treatment and disposal areas (or property owned by the Discharger).

vii. Ponds shall not have a pH less than 6.5 or greater than 8.5.

5. Special Provisions for Municipal Facilities (POTWs Only)

a. Pretreatment Requirements.

i. The Discharger shall implement its approved pretreatment program and the program shall be an enforceable condition of this Order. If the Discharger fails to perform the pretreatment functions, the Regional Water Board, the State Water Board or USEPA may take enforcement actions against the Discharger as authorized by the CWA.

ii. The Discharger shall enforce the Pretreatment Standards promulgated under sections 307(b), 307(c), and 307(d) of the CWA. The Discharger shall perform the pretreatment functions required by 40 CFR Part 403 including, but not limited to:

(a) Adopting the legal authority required by 40 CFR 403.8(f)(1);

(b) Enforcing the Pretreatment Standards of 40 CFR 403.5 and 403.6;

(c) Implementing procedures to ensure compliance as required by 40 CFR 403.8(f)(2); and

(d) Providing funding and personnel for implementation and enforcement of the pretreatment program as required by 40 CFR 403.8(f)(3).

iii. The Discharger shall implement, as more completely set forth in 40 CFR 403.5, the necessary legal authorities, programs, and controls to ensure that the following incompatible wastes are not introduced to the treatment system, where incompatible wastes are:

(a) Wastes which create a fire or explosion hazard in the treatment works;

(b) Wastes which will cause corrosive structural damage to treatment works, but in no case wastes with a pH lower than 5.0, unless the works is specially designed to accommodate such wastes;

(c) Solid or viscous wastes in amounts which cause obstruction to flow in sewers, or which cause other interference with proper operation or treatment works;

(d) Any waste, including oxygen demanding pollutants (BOD, etc.), released in such volume or strength as to cause inhibition or disruption in the treatment works, and subsequent treatment process upset and loss of treatment efficiency;

(e) Heat in amounts that inhibit or disrupt biological activity in the treatment works, or that raise influent temperatures above 40°C (104°F), unless the Regional Water Board approves alternate temperature limits;

(f) Petroleum oil, non-biodegradable cutting oil, or products of mineral oil origin in amounts that will cause interference or pass through;

(g) Pollutants which result in the presence of toxic gases, vapors, or fumes within the treatment works in a quantity that may cause acute worker health and safety problems; and:

(h) Any trucked or hauled pollutants, except at points predesignated by the Discharger.

iv. The Discharger shall implement, as more completely set forth in 40 CFR 403.5, the legal authorities, programs, and controls necessary to ensure that indirect discharges do not introduce pollutants into the sewerage system that, either alone or in conjunction with a discharge or discharges from other sources:

(a) Flow through the system to the receiving water in quantities or concentrations that cause a violation of this Order, or:

(b) Inhibit or disrupt treatment processes, treatment system operations, or sludge processes, use, or disposal and either cause a violation of this Order or prevent sludge use or disposal in accordance with this Order.

b. Sludge/Biosolids Discharge Specifications

i. Collected screenings, residual sludge, biosolids, and other solids removed from liquid wastes shall be disposed of in a manner approved by the Executive Officer, and consistent with Consolidated Regulations for Treatment, Storage, Processing, or Disposal of Solid Waste, as set forth in Title 27, CCR, division 2, subdivision 1, section 20005, et seq. Removal for further treatment, disposal, or reuse at sites (e.g., landfill, composting sites, soil amendment sites) that are operated in accordance with valid waste discharge requirements issued by a Regional Water Board will satisfy these specifications.

ii. Sludge and solid waste shall be removed from screens, sumps, ponds, clarifiers, etc. as needed to ensure optimal plant performance.

iii. The treatment of sludge generated at the Facility shall be confined to the Facility property and conducted in a manner that precludes infiltration of waste constituents into soils in a mass or concentration that will violate groundwater limitations in section V.B. of this Order. In addition, the storage of residual sludge, solid waste, and biosolids on Facility property shall be temporary and controlled, and contained in a manner that minimizes leachate formation and precludes infiltration of waste constituents into soils in a mass or concentration that will violate groundwater limitations included in section V.B. of this Order.

iv. The use and disposal of biosolids shall comply with existing federal and state laws and regulations, including permitting requirements and technical standards included in 40 CFR Part 503. If the State Water Board and the Regional Water Board are given the authority to implement regulations contained in 40 CFR Part 503, this Order may be reopened to incorporate appropriate time schedules and technical standards. The Discharger must comply with the standards and time schedules contained in 40 CFR Part 503 whether or not they have been incorporated into this Order.

c. Biosolids Disposal Requirements

i. The Discharger shall comply with the Monitoring and Reporting Program for biosolids disposal contained in Attachment E.

ii. Any proposed change in biosolids use or disposal practice from a previously approved practice shall be reported to the Executive Officer and USEPA Regional Administrator at least 90 days in advance of the change.

iii. The Discharger is encouraged to comply with the "Manual of Good Practice for Agricultural Land Application of Biosolids" developed by the California Water Environment Association.

d. Biosolids Storage Requirements

i. Facilities for the storage of Class B biosolids shall be located, designed and maintained to restrict public access to biosolids.

ii. Biosolids storage facilities shall be designed and maintained to prevent washout or inundation from a storm or flood with a return frequency of 100 years.

iii. Biosolids storage facilities, which contain biosolids, shall be designed and maintained to contain all storm water falling on the biosolids storage area during a rainfall year with a return frequency of 100 years.

iv. Biosolids storage facilities shall be designed, maintained and operated to minimize the generation of leachate.

e. Collection System. On 2 May 2006, the State Water Board adopted State Water Board Order No. 2006-0003, a Statewide General WDR for Sanitary Sewer Systems. The Discharger shall be subject to the requirements of Order No. 2006-0003 and any future revisions thereto. Order No. 2006-0003 requires that all public agencies that currently own or operate sanitary sewer systems apply for coverage under the General WDR. **The Discharger has applied for and has been approved for coverage under State Water Board Order 2006-0003 for operation of its wastewater collection system.**

Regardless of the coverage obtained under Order No. 2006-0003, the Discharger's collection system is part of the treatment system that is subject to this Order. As such, pursuant to federal regulations, the Discharger must properly operate and maintain its collection system [40 CFR 122.41(e)], report any non-compliance [40 CFR 122.41(l)(6) and (7)], and mitigate any discharge from the collection system in violation of this Order [40 CFR 122.41(d)].

f. This permit, and the Monitoring and Reporting Program which is a part of this permit, requires that certain parameters be monitored on a continuous basis. The wastewater treatment plant is not staffed on a full time basis. Permit violations or system upsets can go undetected during this period. The Discharger is required to establish an electronic system for operator notification for continuous recording device alarms. For existing continuous monitoring systems, the electronic notification system shall be installed within 6 months of adoption of this permit. For systems installed following permit adoption, the notification system shall be installed simultaneously.

6. Other Special Provisions

a. In the event of any change in control or ownership of land or waste discharge facilities presently owned or controlled by the Discharger, the Discharger shall notify the succeeding owner or operator of the existence of this Order by letter, a copy of which shall be immediately forwarded to the Regional Water Board.

To assume operation under this Order, the succeeding owner or operator must apply in writing to the Executive Officer requesting transfer of the Order. The request must contain the requesting entity's full legal name, the State of incorporation if a corporation, address and telephone number of the persons responsible for contact with the Regional Water Board and a statement. The statement shall comply with the signatory and certification requirements in the Federal Standard Provisions (Attachment D, Section V.B.) and state that the new owner or operator assumes full responsibility for compliance with this Order. Failure to submit the request shall be considered a discharge without requirements, a violation of the California Water Code. Transfer shall be approved or disapproved in writing by the Executive Officer

7. Compliance Schedules – Not Applicable

VII. COMPLIANCE DETERMINATION

A. BOD_5 and TSS Effluent Limitations (Section IV.A.1.a). Compliance with the final effluent limitations for BOD_5 and TSS required in Limitations and Discharge Requirements Section IV.A.1.a shall be ascertained by 24-hour composite samples. Compliance with effluent limitations required in Limitations and Discharge Requirements Section IV.A.1.b for percent removal shall be calculated using the arithmetic mean of BOD_5 and TSS in effluent samples collected over a monthly period as a percentage of the arithmetic mean of the values for influent samples collected at approximately the same times during the same period.

B. Average Dry Weather Flow Effluent Limitations (Section IV.A.1.a). The average dry weather discharge flow represents the daily average flow when groundwater is at or near normal and runoff is not occurring. Compliance with the average dry weather flow effluent limitations will be determined annually based on the average daily flow over three consecutive dry weather months (e.g., July, August, and September).

C. Total Residual Chlorine Effluent Limitations (Section IV.A.1.a). Continuous monitoring analyzers for chlorine residual or for dechlorination agent residual in the effluent are appropriate methods for compliance determination. A positive residual dechlorination agent in the effluent indicates that chlorine is not present in the discharge, which demonstrates compliance with the effluent limitations. This type of monitoring can also be used to prove that some chlorine residual exceedances are false positives. Continuous monitoring data showing either a positive dechlorination agent residual or a chlorine residual at or below the prescribed limit are sufficient to show

compliance with the total residual chlorine effluent limitations, as long as the instruments are maintained and calibrated in accordance with the manufacturer's recommendations.

Any excursion above the 1-hour average or 4-day average total residual chlorine effluent limitations is a violation. If the Discharger conducts continuous monitoring and the Discharger can demonstrate, through data collected from a back-up monitoring system, that a chlorine spike recorded by the continuous monitor was not actually due to chlorine, then any excursion resulting from the recorded spike will not be considered an exceedance, but rather reported as a false positive. Records supporting validation of false positives shall be maintained in accordance with Section IV Standard Provisions (Attachment D).

D. **Chronic Whole Effluent Toxicity Effluent Limitation.** Compliance with the accelerated monitoring and TRE/TIE provisions of Provision VI.C.2.a shall constitute compliance with effluent limitation Section IV.A.1.a, for chronic whole effluent toxicity.

E. **Annual Average Effluent Limitations.** Annual average effluent constituent concentrations for determining compliance with the annual average effluent limitations for salinity shall be performed as the average value of each averaging period required in the Monitoring and Reporting Program. For example, if quarterly effluent monitoring is required, the annual average would be the average of the four quarterly averages. Each quarterly average would be the average of the verified results during that calendar quarter

ATTACHMENT A – DEFINITIONS

Arithmetic Mean (μ)
Also called the average, is the sum of measured values divided by the number of samples. For ambient water concentrations, the arithmetic mean is calculated as follows:

Arithmetic mean = $\mu = \Sigma x / n$ where: Σx is the sum of the measured ambient water concentrations, and n is the number of samples.

Average Monthly Effluent Limitation (AMEL)
The highest allowable average of daily discharges over a calendar month, calculated as the sum of all daily discharges measured during a calendar month divided by the number of daily discharges measured during that month.

Average Weekly Effluent Limitation (AWEL)
The highest allowable average of daily discharges over a calendar week (Sunday through Saturday), calculated as the sum of all daily discharges measured during a calendar week divided by the number of daily discharges measured during that week.

Bioaccumulative
Those substances taken up by an organism from its surrounding medium through gill membranes, epithelial tissue, or from food and subsequently concentrated and retained in the body of the organism.

Carcinogenic
Pollutants are substances that are known to cause cancer in living organisms.

Coefficient of Variation (CV)
CV is a measure of the data variability and is calculated as the estimated standard deviation divided by the arithmetic mean of the observed values.

Daily Discharge
Daily Discharge is defined as either: (1) the total mass of the constituent discharged over the calendar day (12:00 am through 11:59 pm) or any 24-hour period that reasonably represents a calendar day for purposes of sampling (as specified in the permit), for a constituent with limitations expressed in units of mass or; (2) the unweighted arithmetic mean measurement of the constituent over the day for a constituent with limitations expressed in other units of measurement (e.g., concentration).

The daily discharge may be determined by the analytical results of a composite sample taken over the course of 1 day (a calendar day or other 24-hour period defined as a day) or by the arithmetic mean of analytical results from one or more grab samples taken over the course of the day.

For composite sampling, if 1 day is defined as a 24-hour period other than a calendar day, the analytical result for the 24-hour period will be considered as the result for the calendar day in which the 24-hour period ends.

Detected, but Not Quantified (DNQ)
DNQ are those sample results less than the RL, but greater than or equal to the laboratory's MDL.

Dilution Credit
Dilution Credit is the amount of dilution granted to a discharge in the calculation of a water quality-based effluent limitation, based on the allowance of a specified mixing zone. It is calculated from the dilution ratio or determined through conducting a mixing zone study or modeling of the discharge and receiving water.

Effluent Concentration Allowance (ECA)
ECA is a value derived from the water quality criterion/objective, dilution credit, and ambient background concentration that is used, in conjunction with the coefficient of variation for the effluent monitoring data, to calculate a long-term average (LTA) discharge concentration. The ECA has the same meaning as waste load allocation (WLA) as used in USEPA guidance (Technical Support Document For Water Quality-based Toxics Control, March 1991, second printing, EPA/505/2-90-001).

Enclosed Bays
Enclosed Bays means indentations along the coast that enclose an area of oceanic water within distinct headlands or harbor works. Enclosed bays include all bays where the narrowest distance between the headlands or outermost harbor works is less than 75 percent of the greatest dimension of the enclosed portion of the bay. Enclosed bays include, but are not limited to, Humboldt Bay, Bodega Harbor, Tomales Bay, Drake's Estero, San Francisco Bay, Morro Bay, Los Angeles-Long Beach Harbor, Upper and Lower Newport Bay, Mission Bay, and San Diego Bay. Enclosed bays do not include inland surface waters or ocean waters.

Estimated Chemical Concentration
The estimated chemical concentration that results from the confirmed detection of the substance by the analytical method below the ML value.

Estuaries
Estuaries means waters, including coastal lagoons, located at the mouths of streams that serve as areas of mixing for fresh and ocean waters. Coastal lagoons and mouths of streams that are temporarily separated from the ocean by sandbars shall be considered estuaries. Estuarine waters shall be considered to extend from a bay or the open ocean to a point upstream where there is no significant mixing of fresh water and seawater. Estuarine waters included, but are not limited to, the Sacramento-San Joaquin Delta, as defined in CWC section 12220, Suisun Bay, Carquinez Strait downstream to the Carquinez Bridge, and appropriate areas of the Smith, Mad, Eel, Noyo, Russian, Klamath, San Diego, and Otay rivers. Estuaries do not include inland surface waters or ocean waters.

Inland Surface Waters
All surface waters of the State that do not include the ocean, enclosed bays, or estuaries.

Instantaneous Maximum Effluent Limitation
The highest allowable value for any single grab sample or aliquot (i.e., each grab sample or aliquot is independently compared to the instantaneous maximum limitation).

Instantaneous Minimum Effluent Limitation
The lowest allowable value for any single grab sample or aliquot (i.e., each grab sample or aliquot is independently compared to the instantaneous minimum limitation).

Maximum Daily Effluent Limitation (MDEL)
The highest allowable daily discharge of a pollutant, over a calendar day (or 24-hour period). For pollutants with limitations expressed in units of mass, the daily discharge is calculated as the total mass of the pollutant discharged over the day. For pollutants with limitations expressed in other units of measurement, the daily discharge is calculated as the arithmetic mean measurement of the pollutant over the day.

Median
The middle measurement in a set of data. The median of a set of data is found by first arranging the measurements in order of magnitude (either increasing or decreasing order). If the number of measurements (*n*) is odd, then the median = $X_{(n+1)/2}$. If *n* is even, then the median = $(X_{n/2} + X_{(n/2)+1})/2$ (i.e., the midpoint between the *n*/2 and *n*/2+1).

Method Detection Limit (MDL)
MDL is the minimum concentration of a substance that can be measured and reported with 99 percent confidence that the analyte concentration is greater than zero, as defined in 40 CFR Part 136, Attachment B, revised as of 3 July 1999.

Minimum Level (ML)
ML is the concentration at which the entire analytical system must give a recognizable signal and acceptable calibration point. The ML is the concentration in a sample that is equivalent to the concentration of the lowest calibration standard analyzed by a specific analytical procedure, assuming that all the method specified sample weights, volumes, and processing steps have been followed.

Mixing Zone
Mixing Zone is a limited volume of receiving water that is allocated for mixing with a wastewater discharge where water quality criteria can be exceeded without causing adverse effects to the overall water body.

Not Detected (ND)
Sample results which are less than the laboratory's MDL.

Ocean Waters
The territorial marine waters of the State as defined by California law to the extent these waters are outside of enclosed bays, estuaries, and coastal lagoons. Discharges to ocean waters are regulated in accordance with the State Water Board's California Ocean Plan.

Persistent Pollutants
Persistent pollutants are substances for which degradation or decomposition in the environment is nonexistent or very slow.

Pollutant Minimization Program (PMP)
PMP means waste minimization and pollution prevention actions that include, but are not limited to, product substitution, waste stream recycling, alternative waste management methods, and education of the public and businesses. The goal of the PMP shall be to reduce all potential sources of a priority pollutant(s) through pollutant minimization (control) strategies, including pollution prevention measures as appropriate, to maintain the effluent concentration at or below the water quality-based effluent limitation. Pollution prevention measures may be particularly appropriate for persistent bioaccumulative priority pollutants where there is evidence that beneficial uses are being impacted. The Regional Water Board may consider cost effectiveness when establishing the requirements of a PMP. The completion and implementation of a Pollution Prevention Plan, if required pursuant to CWC section 13263.3(d), shall be considered to fulfill the PMP requirements.

Pollution Prevention
Pollution Prevention means any action that causes a net reduction in the use or generation of a hazardous substance or other pollutant that is discharged into water and includes, but is not limited to, input change, operational improvement, production process change, and product reformulation (as defined in Water Code section 13263.3). Pollution prevention does not include actions that merely shift a pollutant in wastewater from one environmental medium to another environmental medium, unless clear environmental benefits of such an approach are identified to the satisfaction of the State or Regional Water Board.

Reporting Level (RL)
RL is the ML (and its associated analytical method) chosen by the Discharger for reporting and compliance determination from the MLs included in this Order. The MLs included in this Order correspond to approved analytical methods for reporting a sample result that are selected by the Regional Water Board either from Appendix 4 of the SIP in accordance with section 2.4.2 of the SIP or established in accordance with section 2.4.3 of the SIP. The ML is based on the proper application of method-based analytical procedures for sample preparation and the absence of any matrix interferences. Other factors may be applied to the ML depending on the specific sample preparation steps employed. For example, the treatment typically applied in cases where there are matrix-effects is to dilute the sample or sample aliquot by a factor of ten. In such cases, this additional factor must be applied to the ML in the computation of the RL.

Satellite Collection System
The portion, if any, of a sanitary sewer system owned or operated by a different public agency than the agency that owns and operates the wastewater treatment facility that a sanitary sewer system is tributary to.

Source of Drinking Water
Any water designated as municipal or domestic supply (MUN) in a Regional Water Board Basin Plan.

Standard Deviation (σ)
Standard Deviation is a measure of variability that is calculated as follows:

$$\sigma = (\sum[(x - \mu)^2]/(n - 1))^{0.5}$$

where:

x is the observed value;

μ is the arithmetic mean of the observed values; and

n is the number of samples.

Toxicity Reduction Evaluation (TRE)

TRE is a study conducted in a step-wise process designed to identify the causative agents of effluent or ambient toxicity, isolate the sources of toxicity, evaluate the effectiveness of toxicity control options, and then confirm the reduction in toxicity. The first steps of the TRE consist of the collection of data relevant to the toxicity, including additional toxicity testing, and an evaluation of facility operations and maintenance practices, and best management practices. A Toxicity Identification Evaluation (TIE) may be required as part of the TRE, if appropriate. (A TIE is a set of procedures to identify the specific chemical(s) responsible for toxicity. These procedures are performed in three phases (characterization, identification, and confirmation) using aquatic organism toxicity tests.)

ATTACHMENT B – MAP

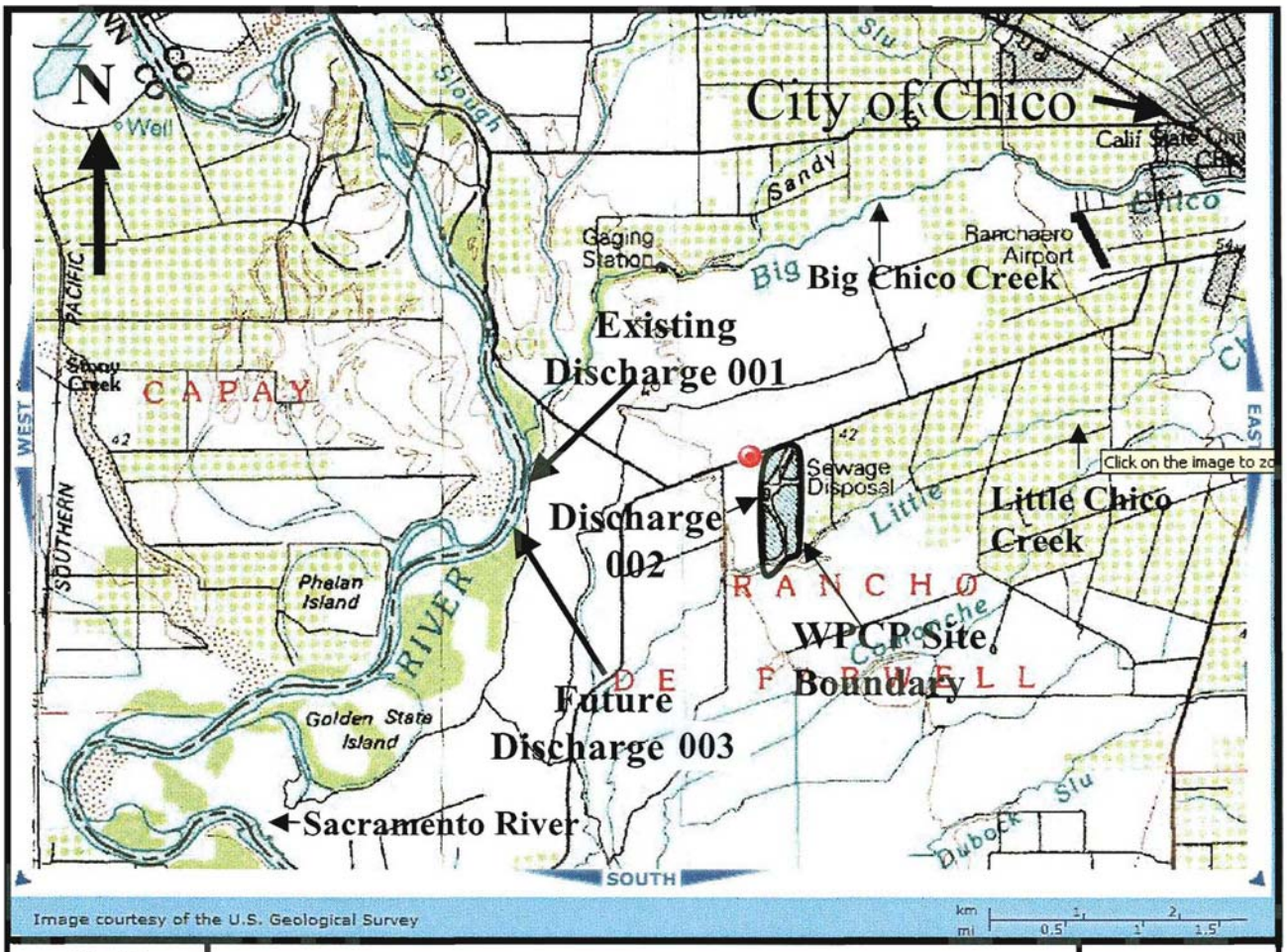

City of Chico Water Pollution Control Plant

General Location and Topographic Map

Drawing Reference: **ORD FERRY** U.S.G.S TOPOGRAPHIC MAP 7.5 MINUTE QUADRANGLE ***Not to scale***	**SITE LOCATION MAP** **CITY OF CHICO** **CHICO WATER POLLUTION CONTROL PLANT** **BUTTE COUNTY**	N W E S

ATTACHMENT C – FLOW SCHEMATIC

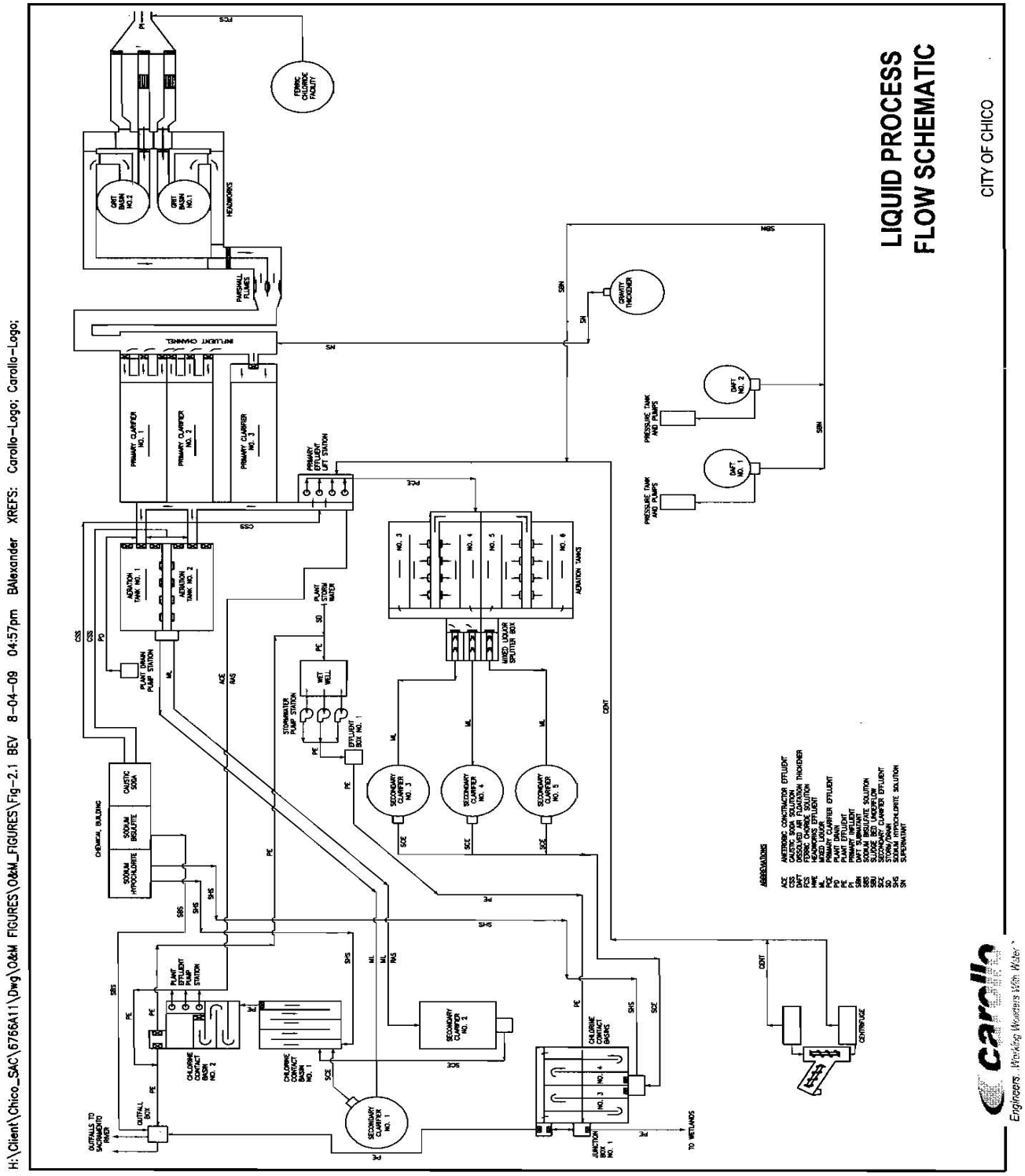

ATTACHMENT D – STANDARD PROVISIONS

I. STANDARD PROVISIONS – PERMIT COMPLIANCE

A. Duty to Comply

1. The Discharger must comply with all of the conditions of this Order. Any noncompliance constitutes a violation of the Clean Water Act (CWA) and the California Water Code (CWC) and is grounds for enforcement action, for permit termination, revocation and reissuance, or modification; or denial of a permit renewal application. (40 CFR 122.41(a).)

2. The Discharger shall comply with effluent standards or prohibitions established under section 307(a) of the CWA for toxic pollutants and with standards for sewage sludge use or disposal established under section 405(d) of the CWA within the time provided in the regulations that establish these standards or prohibitions, even if this Order has not yet been modified to incorporate the requirement. (40 CFR 122.41(a)(1).)

B. Need to Halt or Reduce Activity Not a Defense

It shall not be a defense for a Discharger in an enforcement action that it would have been necessary to halt or reduce the permitted activity in order to maintain compliance with the conditions of this Order. (40 CFR 122.41(c).)

C. Duty to Mitigate

The Discharger shall take all reasonable steps to minimize or prevent any discharge or sludge use or disposal in violation of this Order that has a reasonable likelihood of adversely affecting human health or the environment. (40 CFR 122.41(d).)

D. Proper Operation and Maintenance

The Discharger shall at all times properly operate and maintain all facilities and systems of treatment and control (and related appurtenances) which are installed or used by the Discharger to achieve compliance with the conditions of this Order. Proper operation and maintenance also includes adequate laboratory controls and appropriate quality assurance procedures. This provision requires the operation of backup or auxiliary facilities or similar systems that are installed by a Discharger only when necessary to achieve compliance with the conditions of this Order. (40 CFR 122.41(e).)

E. Property Rights

1. This Order does not convey any property rights of any sort or any exclusive privileges. (40 CFR 122.41(g).)

2. The issuance of this Order does not authorize any injury to persons or property or invasion of other private rights, or any infringement of state or local law or regulations. (40 CFR 122.5(c).)

F. Inspection and Entry

The Discharger shall allow the Regional Water Board, State Water Board, United States Environmental Protection Agency (USEPA), and/or their authorized representatives (including an authorized contractor acting as their representative), upon the presentation of credentials and other documents, as may be required by law, to (40 CFR 122.41(i); CWC section 13383):

1. Enter upon the Discharger's premises where a regulated facility or activity is located or conducted, or where records are kept under the conditions of this Order (40 CFR 122.41(i)(1));

2. Have access to and copy, at reasonable times, any records that must be kept under the conditions of this Order (40 CFR 122.41(i)(2));

3. Inspect and photograph, at reasonable times, any facilities, equipment (including monitoring and control equipment), practices, or operations regulated or required under this Order (40 CFR 122.41(i)(3)); and

4. Sample or monitor, at reasonable times, for the purposes of assuring Order compliance or as otherwise authorized by the CWA or the CWC, any substances or parameters at any location. (40 CFR 122.41(i)(4).)

G. Bypass

1. Definitions

   a. “Bypass” means the intentional diversion of waste streams from any portion of a treatment facility. (40 CFR 122.41(m)(1)(i).)

   b. “Severe property damage” means substantial physical damage to property, damage to the treatment facilities, which causes them to become inoperable, or substantial and permanent loss of natural resources that can reasonably be expected to occur in the absence of a bypass. Severe property damage does not mean economic loss caused by delays in production. (40 CFR 122.41(m)(1)(ii).)

2. Bypass not exceeding limitations. The Discharger may allow any bypass to occur which does not cause exceedances of effluent limitations, but only if it is for essential maintenance to assure efficient operation. These bypasses are not subject to the provisions listed in Standard Provisions – Permit Compliance I.G.3, I.G.4, and I.G.5 below. (40 CFR 122.41(m)(2).)

3. Prohibition of bypass. Bypass is prohibited, and the Regional Water Board may take enforcement action against a Discharger for bypass, unless (40 CFR 122.41(m)(4)(i)):

a. Bypass was unavoidable to prevent loss of life, personal injury, or severe property damage (40 CFR 122.41(m)(4)(i)(A));

b. There were no feasible alternatives to the bypass, such as the use of auxiliary treatment facilities, retention of untreated wastes, or maintenance during normal periods of equipment downtime. This condition is not satisfied if adequate back-up equipment should have been installed in the exercise of reasonable engineering judgment to prevent a bypass that occurred during normal periods of equipment downtime or preventive maintenance (40 CFR 122.41(m)(4)(i)(B)); and

c. The Discharger submitted notice to the Regional Water Board as required under Standard Provisions – Permit Compliance I.G.5 below. (40 CFR 122.41(m)(4)(i)(C).)

4. The Regional Water Board may approve an anticipated bypass, after considering its adverse effects, if the Regional Water Board determines that it will meet the three conditions listed in Standard Provisions – Permit Compliance I.G.3 above. (40 CFR 122.41(m)(4)(ii).)

5. Notice

a. Anticipated bypass. If the Discharger knows in advance of the need for a bypass, it shall submit a notice, if possible at least 10 days before the date of the bypass. (40 CFR 122.41(m)(3)(i).)

b. Unanticipated bypass. The Discharger shall submit notice of an unanticipated bypass as required in Standard Provisions - Reporting V.E below (24-hour notice). (40 CFR 122.41(m)(3)(ii).)

H. Upset

Upset means an exceptional incident in which there is unintentional and temporary noncompliance with technology based permit effluent limitations because of factors beyond the reasonable control of the Discharger. An upset does not include noncompliance to the extent caused by operational error, improperly designed treatment facilities, inadequate treatment facilities, lack of preventive maintenance, or careless or improper operation. (40 CFR 122.41(n)(1).)

1. Effect of an upset. An upset constitutes an affirmative defense to an action brought for noncompliance with such technology based permit effluent limitations if the requirements of Standard Provisions – Permit Compliance I.H.2 below are met. No determination made during administrative review of claims that noncompliance was

caused by upset, and before an action for noncompliance, is final administrative action subject to judicial review. (40 CFR 122.41(n)(2).)

2. Conditions necessary for a demonstration of upset. A Discharger who wishes to establish the affirmative defense of upset shall demonstrate, through properly signed, contemporaneous operating logs or other relevant evidence that (40 CFR 122.41(n)(3)):

a. An upset occurred and that the Discharger can identify the cause(s) of the upset (40 CFR 122.41(n)(3)(i));

b. The permitted facility was, at the time, being properly operated (40 CFR 122.41(n)(3)(ii));

c. The Discharger submitted notice of the upset as required in Standard Provisions – Reporting V.E.2.b below (24-hour notice) (40 CFR 122.41(n)(3)(iii)); and

d. The Discharger complied with any remedial measures required under Standard Provisions – Permit Compliance I.C above. (40 CFR 122.41(n)(3)(iv).)

3. Burden of proof. In any enforcement proceeding, the Discharger seeking to establish the occurrence of an upset has the burden of proof. (40 CFR 122.41(n)(4).)

II. STANDARD PROVISIONS – PERMIT ACTION

A. General

This Order may be modified, revoked and reissued, or terminated for cause. The filing of a request by the Discharger for modification, revocation and reissuance, or termination, or a notification of planned changes or anticipated noncompliance does not stay any Order condition. (40 CFR 122.41(f).)

B. Duty to Reapply

If the Discharger wishes to continue an activity regulated by this Order after the expiration date of this Order, the Discharger must apply for and obtain a new permit. (40 CFR 122.41(b).)

C. Transfers

This Order is not transferable to any person except after notice to the Regional Water Board. The Regional Water Board may require modification or revocation and reissuance of the Order to change the name of the Discharger and incorporate such other requirements as may be necessary under the CWA and the CWC. (40 CFR 122.41(l)(3) and 122.61.)

III. STANDARD PROVISIONS – MONITORING

A. Samples and measurements taken for the purpose of monitoring shall be representative of the monitored activity. (40 CFR 122.41(j)(1).)

B. Monitoring results must be conducted according to test procedures under 40 CFR Part 136 or, in the case of sludge use or disposal, approved under 40 CFR Part 136 unless otherwise specified in 40 CFR Part 503 unless other test procedures have been specified in this Order. (40 CFR 122.41(j)(4) and 122.44(i)(1)(iv).)

IV. STANDARD PROVISIONS – RECORDS

A. Except for records of monitoring information required by this Order related to the Discharger's sewage sludge use and disposal activities, which shall be retained for a period of at least 5 years (or longer as required by 40 CFR Part 503), the Discharger shall retain records of all monitoring information, including all calibration and maintenance records and all original strip chart recordings for continuous monitoring instrumentation, copies of all reports required by this Order, and records of all data used to complete the application for this Order, for a period of at least three (3) years from the date of the sample, measurement, report or application. This period may be extended by request of the Regional Water Board Executive Officer at any time. (40 CFR 122.41(j)(2).)

B. Records of monitoring information shall include:

1. The date, exact place, and time of sampling or measurements (40 CFR 122.41(j)(3)(i));

2. The individual(s) who performed the sampling or measurements (40 CFR 122.41(j)(3)(ii));

3. The date(s) analyses were performed (40 CFR 122.41(j)(3)(iii));

4. The individual(s) who performed the analyses (40 CFR 122.41(j)(3)(iv));

5. The analytical techniques or methods used (40 CFR 122.41(j)(3)(v)); and

6. The results of such analyses. (40 CFR 122.41(j)(3)(vi).)

C. Claims of confidentiality for the following information will be denied (40 CFR 122.7(b)):

1. The name and address of any permit applicant or Discharger (40 CFR 122.7(b)(1)); and

2. Permit applications and attachments, permits and effluent data. (40 CFR 122.7(b)(2).)

V. STANDARD PROVISIONS – REPORTING

A. Duty to Provide Information

The Discharger shall furnish to the Regional Water Board, State Water Board, or USEPA within a reasonable time, any information which the Regional Water Board, State Water Board, or USEPA may request to determine whether cause exists for modifying, revoking and reissuing, or terminating this Order or to determine compliance with this Order. Upon request, the Discharger shall also furnish to the Regional Water Board, State Water Board, or USEPA copies of records required to be kept by this Order. (40 CFR 122.41(h); Wat. Code, § 13267.)

B. Signatory and Certification Requirements

1. All applications, reports, or information submitted to the Regional Water Board, State Water Board, and/or USEPA shall be signed and certified in accordance with Standard Provisions – Reporting V.B.2, V.B.3, V.B.4, and V.B.5 below. (40 CFR 122.41(k).)

2. All permit applications shall be signed by either a principal executive officer or ranking elected official. For purposes of this provision, a principal executive officer of a federal agency includes: (i) the chief executive officer of the agency, or (ii) a senior executive officer having responsibility for the overall operations of a principal geographic unit of the agency (e.g., Regional Administrators of USEPA). (40 CFR 122.22(a)(3).).

3. All reports required by this Order and other information requested by the Regional Water Board, State Water Board, or USEPA shall be signed by a person described in Standard Provisions – Reporting V.B.2 above, or by a duly authorized representative of that person. A person is a duly authorized representative only if:

a. The authorization is made in writing by a person described in Standard Provisions – Reporting V.B.2 above (40 CFR 122.22(b)(1));

b. The authorization specifies either an individual or a position having responsibility for the overall operation of the regulated facility or activity such as the position of plant manager, operator of a well or a well field, superintendent, position of equivalent responsibility, or an individual or position having overall responsibility for environmental matters for the company. (A duly authorized representative may thus be either a named individual or any individual occupying a named position.) (40 CFR 122.22(b)(2)); and

c. The written authorization is submitted to the Regional Water Board and State Water Board. (40 CFR 122.22(b)(3).)

4. If an authorization under Standard Provisions – Reporting V.B.3 above is no longer accurate because a different individual or position has responsibility for the overall operation of the facility, a new authorization satisfying the requirements of Standard

Provisions – Reporting V.B.3 above must be submitted to the Regional Water Board and State Water Board prior to or together with any reports, information, or applications, to be signed by an authorized representative. (40 CFR 122.22(c).)

5. Any person signing a document under Standard Provisions – Reporting V.B.2 or V.B.3 above shall make the following certification:

"*I certify under penalty of law that this document and all attachments were prepared under my direction or supervision in accordance with a system designed to assure that qualified personnel properly gather and evaluate the information submitted. Based on my inquiry of the person or persons who manage the system or those persons directly responsible for gathering the information, the information submitted is, to the best of my knowledge and belief, true, accurate, and complete. I am aware that there are significant penalties for submitting false information, including the possibility of fine and imprisonment for knowing violations.*" (40 CFR 122.22(d).)

C. Monitoring Reports

1. Monitoring results shall be reported at the intervals specified in the Monitoring and Reporting Program (Attachment E) in this Order. (40 CFR 122.22(l)(4).)

2. Monitoring results must be reported on a Discharge Monitoring Report (DMR) form or forms provided or specified by the Regional Water Board or State Water Board for reporting results of monitoring of sludge use or disposal practices. (40 CFR 122.41(l)(4)(i).)

3. If the Discharger monitors any pollutant more frequently than required by this Order using test procedures approved under 40 CFR Part 136 or, in the case of sludge use or disposal, approved under 40 CFR Part 136 unless otherwise specified in 40 CFR Part 503, or as specified in this Order, the results of this monitoring shall be included in the calculation and reporting of the data submitted in the DMR or sludge reporting form specified by the Regional Water Board. (40 CFR 122.41(l)(4)(ii).)

4. Calculations for all limitations, which require averaging of measurements, shall utilize an arithmetic mean unless otherwise specified in this Order. (40 CFR 122.41(l)(4)(iii).)

D. Compliance Schedules

Reports of compliance or noncompliance with, or any progress reports on, interim and final requirements contained in any compliance schedule of this Order, shall be submitted no later than 14 days following each schedule date. (40 CFR 122.41(l)(5).)

E. Twenty-Four Hour Reporting

1. The Discharger shall report any noncompliance that may endanger health or the environment. Any information shall be provided orally within 24 hours from the time the Discharger becomes aware of the circumstances. A written submission shall

2. The following shall be included as information that must be reported within 24 hours under this paragraph (40 CFR 122.41(l)(6)(ii)):

   a. Any unanticipated bypass that exceeds any effluent limitation in this Order. (40 CFR 122.41(l)(6)(ii)(A).)

   b. Any upset that exceeds any effluent limitation in this Order. (40 CFR 122.41(l)(6)(ii)(B).)

3. The Regional Water Board may waive the above-required written report under this provision on a case-by-case basis if an oral report has been received within 24 hours. (40 CFR 122.41(l)(6)(iii).)

F. Planned Changes

The Discharger shall give notice to the Regional Water Board as soon as possible of any planned physical alterations or additions to the permitted facility. Notice is required under this provision only when (40 CFR 122.41(l)(1)):

1. The alteration or addition to a permitted facility may meet one of the criteria for determining whether a facility is a new source in 40 CFR 122.29(b) (40 CFR 122.41(l)(1)(i)); or

2. The alteration or addition could significantly change the nature or increase the quantity of pollutants discharged. This notification applies to pollutants that are not subject to effluent limitations in this Order. (40 CFR 122.41(l)(1)(ii).)

3. The alteration or addition results in a significant change in the Discharger's sludge use or disposal practices, and such alteration, addition, or change may justify the application of permit conditions that are different from or absent in the existing permit, including notification of additional use or disposal sites not reported during the permit application process or not reported pursuant to an approved land application plan. (40 CFR 122.41(l)(1)(iii).)

G. Anticipated Noncompliance

The Discharger shall give advance notice to the Regional Water Board or State Water Board of any planned changes in the permitted facility or activity that may result in noncompliance with General Order requirements. (40 CFR 122.41(l)(2).)

H. Other Noncompliance

The Discharger shall report all instances of noncompliance not reported under Standard Provisions – Reporting V.C, V.D, and V.E above at the time monitoring reports are submitted. The reports shall contain the information listed in Standard Provision – Reporting V.E above. (40 CFR 122.41(l)(7).)

I. Other Information

When the Discharger becomes aware that it failed to submit any relevant facts in a permit application, or submitted incorrect information in a permit application or in any report to the Regional Water Board, State Water Board, or USEPA, the Discharger shall promptly submit such facts or information. (40 CFR 122.41(l)(8).)

VI. STANDARD PROVISIONS – ENFORCEMENT

A. The Regional Water Board is authorized to enforce the terms of this permit under several provisions of the CWC, including, but not limited to, sections 13385, 13386, and 13387

VII. ADDITIONAL PROVISIONS – NOTIFICATION LEVELS

A. Publicly-Owned Treatment Works (POTWs)

All POTWs shall provide adequate notice to the Regional Water Board of the following (40 CFR 122.42(b)):

1. Any new introduction of pollutants into the POTW from an indirect discharger that would be subject to sections 301 or 306 of the CWA if it were directly discharging those pollutants (40 CFR 122.42(b)(1)); and

2. Any substantial change in the volume or character of pollutants being introduced into that POTW by a source introducing pollutants into the POTW at the time of adoption of the Order. (40 CFR 122.42(b)(2).)

3. Adequate notice shall include information on the quality and quantity of effluent introduced into the POTW as well as any anticipated impact of the change on the quantity or quality of effluent to be discharged from the POTW. (40 CFR 122.42(b)(3).)

ATTACHMENT E – MONITORING AND REPORTING PROGRAM

Table of Contents

I. General Monitoring Provisions E-2
II. Monitoring Locations E-3
III. Influent Monitoring Requirements E-4
A. Monitoring Location INF-001 ..... E-4
IV. Effluent Monitoring Requirements E-4
A. Monitoring Location EFF-001 ..... E-4
V. Whole Effluent Toxicity Testing Requirements E-5
VI. Land Discharge Monitoring Requirements – Not applicable E-9
VII. Reclamation Monitoring Requirements – Not applicable E-9
VIII. Receiving Water Monitoring Requirements – Surface Water E-9
A. Monitoring Location RSW-001/-002 (Discharge D-001) E-9
B. Monitoring Location RSW-003/-004 (Discharge D-002) E-9
C. Monitoring Location RSW-005/-006 (Discharge D-003) E-10
D. Receiving Water Conditions E-11
IX. Other Monitoring Requirements E-11
A. Biosolids E-11
B. Municipal Water Supply E-12
X. Reporting Requirements E-12
A. General Monitoring and Reporting Requirements E-12
B. Self Monitoring Reports (SMRs) E-13
C. Discharge Monitoring Reports (DMRs) E-16
D. Other Reports E-16

List of Tables

Table E-1. Monitoring Station Locations E-3
Table E-2. Influent Monitoring E-4
Table E-3. Effluent Monitoring E-5
Table E-4. Chronic Toxicity Testing Dilution Series E-7
Table E-5. Receiving Water Monitoring Requirements RSW-001/-002 ..... E-9
Table E-6. Receiving Water Monitoring Requirements E-10
Table E-7. Receiving Water Monitoring Requirements RSW-005/-006 ..... E-10
Table E-8. Municipal Water Supply Monitoring Requirements E-12
Table E-9. Monitoring Periods and Reporting Schedule E-14
Table E-10. Reporting Requirements for Special Provisions Progress Reports E-17

ATTACHMENT E – MONITORING AND REPORTING PROGRAM

Title 40 of the Code of Federal Regulations (CFR), section 122.48 (40 CFR 122.48) requires that all NPDES permits specify monitoring and reporting requirements. California Water Code (CWC) sections 13267 and 13383 also authorize the Regional Water Quality Control Board (Regional Water Board) to require technical and monitoring reports. This Monitoring and Reporting Program establishes monitoring and reporting requirements, which implement the federal and California regulations.

I. GENERAL MONITORING PROVISIONS

A. Samples and measurements taken as required herein shall be representative of the volume and nature of the monitored discharge. All samples shall be taken at the monitoring locations specified below and, unless otherwise specified, before the monitored flow joins or is diluted by any other waste stream, body of water, or substance. Monitoring locations shall not be changed without notification to and the approval of this Regional Water Board.

B. Effluent samples shall be taken downstream of the last addition of wastes to the treatment or discharge works where a representative sample may be obtained prior to mixing with the receiving waters. Samples shall be collected at such a point and in such a manner to ensure a representative sample of the discharge.

C. Chemical, bacteriological, and bioassay analyses shall be conducted at a laboratory certified for such analyses by the Department of Public Health (DPH; formerly the Department of Health Services). In the event a certified laboratory is not available to the Discharger, analyses performed by a noncertified laboratory will be accepted provided a Quality Assurance-Quality Control Program is instituted by the laboratory. A manual containing the steps followed in this program must be kept in the laboratory and shall be available for inspection by Regional Water Board staff. The Quality Assurance-Quality Control Program must conform to USEPA guidelines or to procedures approved by the Regional Water Board.

D. All analyses shall be performed in a laboratory certified to perform such analyses by DPH. Laboratories that perform sample analyses must be identified in all monitoring reports submitted to the Regional Water Board.

E. Appropriate flow measurement devices and methods consistent with accepted scientific practices shall be selected and used to ensure the accuracy and reliability of measurements of the volume of monitored discharges. All monitoring instruments and devices used by the Discharger to fulfill the prescribed monitoring program shall be properly maintained and calibrated as necessary, at least yearly, to ensure their continued accuracy. All flow measurement devices shall be calibrated at least once per year to ensure continued accuracy of the devices.

F. Monitoring results, including noncompliance, shall be reported at intervals and in a manner specified in this Monitoring and Reporting Program.

G. Laboratories analyzing monitoring samples shall be certified by DPH, in accordance with the provision of CWC section 13176, and must include quality assurance/quality control data with their reports.

H. The Discharger shall conduct analysis on any sample provided by USEPA as part of the Discharge Monitoring Quality Assurance (DMQA) program. The results of any such analysis shall be submitted to USEPA's DMQA manager.

I. The Discharger shall file with the Regional Water Board technical reports on self-monitoring performed according to the detailed specifications contained in this Monitoring and Reporting Program.

J. The results of all monitoring required by this Order shall be reported to the Regional Water Board, and shall be submitted in such a format as to allow direct comparison with the limitations and requirements of this Order. Unless otherwise specified, discharge flows shall be reported in terms of the monthly average and the daily maximum discharge flows.

II. MONITORING LOCATIONS

The Discharger shall establish the following monitoring locations to demonstrate compliance with the effluent limitations, discharge specifications, and other requirements in this Order:

Table E-1. Monitoring Station Locations

Discharge Point Name	Monitoring Location Name	Monitoring Location Description
--	INF-001	Influent monitoring location, at headworks
D-001 / -002 / -003	EFF-001	Effluent monitoring location
D-001	RSW-001	Surface water monitoring location, 500 ft upstream from D-001 (Sacramento River)
D-001	RSW-002	Surface water monitoring location, 500 ft downstream from D-001 (Sacramento River)
D-002	RSW-003	Surface water monitoring location, 500 ft upstream from D-002 (M&T Canal)
D-002	RSW-004	Surface water monitoring location, 500 ft downstream from D-002 (M&T Canal)
D-003	RSW-005	Surface water monitoring location, 500 ft upstream from D-003 (Sacramento River)
D-003	RSW-006	Surface water monitoring location, 500 ft downstream from D-003 (Sacramento River)
--	SPL-001	Municipal water supply
--	BIO-001	Biosolids (sludge) monitoring location

III. INFLUENT MONITORING REQUIREMENTS

A. Monitoring Location INF-001

1. The Discharger shall monitor **influent to the** at **Monitoring Location INF-001** as follows:

Table E-2. Influent Monitoring

Parameter	Units	Sample Type	Minimum Sampling Frequency	Required Analytical Test Method
Daily Flow	mgd	Meter	Continuous	
BOD 5-day 20°C	mg/L, lbs/day	24-hr Composite	2/month	
Suspended Solids	mg/L, lbs/day	24-hr Composite	2/month	
Temperature	^{o}F	Grab	2/month	

IV. EFFLUENT MONITORING REQUIREMENTS

A. Monitoring Location EFF-001

1. The Discharger shall monitor effluent discharge at **EFF-001** as follows. If more than one analytical test method is listed for a given parameter, the Discharger must select from the listed methods and corresponding Minimum Level:

Table E-3. Effluent Monitoring

Parameter	Units	Sample Type	Minimum Sampling Frequency	Required Analytical Test Method
Daily Flow	mgd	Continuous	Daily	[6]
Chlorine Residual	mg/L	Continuous	Continuous[1]	[6]
pH[2]	pH units	Grab	Daily	[6]
20°C BOD_5	mg/L, lbs/day	24-hour Composite	Weekly	[6]
Suspended Solids	mg/L, lbs/day	24-hour Composite	Weekly	[6]
Total Coliform Organisms	MPN/100 ml	Grab	Weekly	[6]
Temperature[2]	°F	Grab	Weekly	[6]
Ammonia[2,3]	mg/L	Grab	Monthly	[6]
Total Copper	µg/L	Grab	Monthly	[6]
Dichlorobromomethane	µg/L	Grab	Monthly	[6]
Chlorodibromomethane	µg/L	Grab	Monthly	[6]
Electrical Conductivity @ 25°C	µmhos/cm	Grab	Monthly	[6]
Total Dissolved Solids	mg/L	Grab	Quarterly	[6]
Priority Pollutants	µg/L	Grab	Annually[4]	[6]
Acute Toxicity[5]	% Survival	Grab	Quarterly	[6]

[1] Total chlorine residual must be monitored with a method sensitive to and accurate at the permitted level of 0.01 mg/L. Report peak 1-hour average for each day and peak 4-day average for the month.

[2] Concurrent with biotoxcity monitoring.

[3] Report as total and un-ionized ammonia.

[4] Concurrent with receiving surface water sampling at RSW-001/-003/-005 (depending on discharge location) (receiving water hardness and pH shall be determined at the upstream sample location at the same time EFF-001 sample taken).

[5] Rainbow trout shall be used as the test species.

[6] For priority pollutant constituents with effluent limitations, detection limits shall be below the effluent limitations. If the lowest minimum level (ML) published in Appendix 4 of the Policy for Implementation of Toxics Standards for Inland Surface Waters, Enclosed Bays, and Estuaries of California (State Implementation Plan or SIP) is not below the effluent limitation, the detection limit shall be the lowest ML. For priority pollutant constituents without effluent limitations, the detection limits shall be equal to or less than the lowest ML published in Appendix 4 of the SIP.

2. If the discharge is intermittent rather than continuous, then on the first day of each such intermittent discharge, the Discharger shall monitor and record data for all of the constituents listed above, after which the frequencies of analysis given in the schedule shall apply for the duration of each such intermittent discharge.

V. WHOLE EFFLUENT TOXICITY TESTING REQUIREMENTS

A. Acute Toxicity Testing. The Discharger shall conduct acute toxicity testing to determine whether the effluent is contributing acute toxicity to the receiving water. The Discharger shall meet the following acute toxicity testing requirements:

1. *Monitoring Frequency* – The Discharger shall perform **quarterly** acute toxicity testing, concurrent with effluent ammonia sampling.

2. *Sample Types* – For static non-renewal and static renewal testing, the samples shall be **grab samples** and shall be representative of the volume and quality of the discharge. The effluent samples shall be taken at the effluent monitoring location **EFF-001**.

3. *Test Species* – Test species shall be rainbow trout (Oncorhchus mykiss.

4. *Methods* – The acute toxicity testing samples shall be analyzed using EPA-821-R-02-012, Fifth Edition. Temperature, total residual chlorine, and pH shall be recorded at the time of sample collection. No pH adjustment may be made unless approved by the Executive Officer.

5. *Test Failure* – If an acute toxicity test does not meet all test acceptability criteria, as specified in the test method, the Discharger must re-sample and re-test as soon as possible, not to exceed 7 days following notification of test failure.

B. Chronic Toxicity Testing. The Discharger shall conduct three species chronic toxicity testing to determine whether the effluent is contributing chronic toxicity to the receiving water. The Discharger shall meet the following chronic toxicity testing requirements:

1. *Monitoring Frequency –* The Discharger shall perform **annual** three species chronic toxicity testing.

2. *Sample Types* – Effluent samples shall **be flow proportional 24-hour composites** and shall be representative of the volume and quality of the discharge. The effluent samples shall be taken at the effluent monitoring location **EFF-001**. The receiving water control shall be a grab sample obtained from the **RSW-001/-003/-005 [Upstream sampling location out of influence of the discharge]** sampling location, as identified in this Monitoring and Reporting Program.

3. *Sample Volumes* – Adequate sample volumes shall be collected to provide renewal water to complete the test in the event that the discharge is intermittent.

4. *Test Species* – Chronic toxicity testing measures sublethal (e.g., reduced growth, reproduction) and/or lethal effects to test organisms exposed to an effluent compared to that of the control organisms. The Discharger shall conduct chronic toxicity tests with:

   - The cladoceran, water flea, *Ceriodaphnia dubia* (survival and reproduction test);
   - The fathead minnow, *Pimephales promelas* (larval survival and growth test); and
   - The green alga, *Selenastrum capricornutum* (growth test).

5. *Methods* – The presence of chronic toxicity shall be estimated as specified in *Short-term Methods for Estimating the Chronic Toxicity of Effluents and Receiving Waters to Freshwater Organisms, Fourth Edition*, EPA/821-R-02-013, October 2002.

6. *Reference Toxicant* – As required by the SIP, all chronic toxicity tests shall be conducted with concurrent testing with a reference toxicant and shall be reported with the chronic toxicity test results.

7. *Dilutions* – The chronic toxicity testing shall be performed using the dilution series identified in the table, below. The receiving water control shall be used as the diluent (unless the receiving water is toxic).

Table E-4. Chronic Toxicity Testing Dilution Series

Sample	Dilutions (%)						Controls	
	100	50	25	12.5	6.25	3.125	Receiving Water	Laboratory Water
% Effluent	100	50	25	12.5	6.25	3.125	0	0
% Receiving Water	0	50	75	87.5	93.75	96.875	100	0
% Laboratory Water	0			0	0	0	0	100

8. *Test Failure* – The Discharger must re-sample and re-test as soon as possible, but no later than fourteen (14) days after receiving notification of a test failure. A test failure is defined as follows:

   a. The reference toxicant test or the effluent test does not meet all test acceptability criteria as specified in the *Short-term Methods for Estimating the Chronic Toxicity of Effluents and Receiving Waters to Freshwater Organisms, Fourth Edition*, EPA/821-R-02-013, October 2002 (Method Manual), and its subsequent amendments or revisions; or

   b. The percent minimum significant difference (PMSD) measured for the test exceeds the upper PMSD bound variability criterion in Table 6 on page 52 of the Method Manual. (A retest is only required in this case if the test results do not exceed the monitoring trigger specified in the Special Provision at section VI. 2.a.iii. of the Order.)

C. **WET Testing Notification Requirements.** The Discharger shall notify the Regional Water Board within 24-hours after the receipt of test results exceeding the monitoring trigger during regular or accelerated monitoring, or an exceedance of the acute toxicity effluent limitation.

D. **WET Testing Reporting Requirements.** All toxicity test reports shall include the contracting laboratory's complete report provided to the Discharger and shall be in accordance with the appropriate "Report Preparation and Test Review" sections of the method manuals. At a minimum, whole effluent toxicity monitoring shall be reported as follows:

1. **Chronic WET Reporting.** Regular chronic toxicity monitoring results shall be reported to the Regional Water Board within 30 days following completion of the test, and shall contain, at minimum:

   a. The results expressed in TUc, measured as 100/NOEC, and also measured as 100/LC50, 100/EC25, 100/IC25, and 100/IC50, as appropriate.

   b. The statistical methods used to calculate endpoints;

   c. The statistical output page, which includes the calculation of the percent minimum significant difference (PMSD);

   d. The dates of sample collection and initiation of each toxicity test; and

   e. The results compared to the numeric toxicity monitoring trigger.

   Additionally, the monthly discharger self-monitoring reports shall contain an updated chronology of chronic toxicity test results expressed in TUc, and organized by test species, type of test (survival, growth or reproduction), and monitoring frequency, i.e., either quarterly, monthly, accelerated, or Toxicity Reduction Evaluation (TRE).

2. **Acute WET Reporting.** Acute toxicity test results shall be submitted with the monthly discharger self-monitoring reports and reported as percent survival.

3. **TRE Reporting.** Reports for TREs shall be submitted in accordance with the schedule contained in the Discharger's approved TRE Workplan.

4. **Quality Assurance (QA).** The Discharger must provide the following information for QA purposes:

   a. Results of the applicable reference toxicant data with the statistical output page giving the species, NOEC, LOEC, type of toxicant, dilution water used, concentrations used, PMSD, and dates tested.

   b. The reference toxicant control charts for each endpoint, which include summaries of reference toxicant tests performed by the contracting laboratory.

   c. Any information on deviations or problems encountered and how they were dealt with.

VI. LAND DISCHARGE MONITORING REQUIREMENTS – NOT APPLICABLE

VII. RECLAMATION MONITORING REQUIREMENTS – NOT APPLICABLE

VIII. RECEIVING WATER MONITORING REQUIREMENTS – SURFACE WATER

A. Monitoring Location RSW-001/-002 (Discharge D-001)

1. The Discharger shall monitor the Sacramento River at **RSW-001 and RSW-002 when discharging at D-001** as follows:

Table E-5. Receiving Water Monitoring Requirements RSW-001/-002

Parameter	Units	Sample Type	Minimum Sampling Frequency	Required Analytical Test Method
pH	pH Units	Grab	1/month	[1]
Turbidity	NTU	Grab	1/month	[1]
Dissolved Oxygen	mg/L	Grab	1/month	[1]
Temperature	°F (°C)	Grab	1/month	[1]
Priority Pollutants[2,3,4]	ug/L	Grab	1/year	[1]
Total Copper[3]	µg/L	Grab	Monthly	[1]
Dichlorobromomethane[3]	µg/L	Grab	Monthly	[1]
Chlorodibromomethane[3]	µg/L	Grab	Monthly	[1]

[1] Pollutants shall be analyzed using the analytical methods described in 40 CFR Part 136; for priority pollutants the methods must meet the lowest minimum levels (MLs) specified in Attachment 4 of the SIP, where no methods are specified for a given pollutant, by methods approved by this Regional Water Board or the State Water Board.

[2] Receiving water hardness and pH shall be determined at RSW-001 the same time. These samples shall be taken the same day as effluent samples for priority pollutants are taken.

[3] Required only at RSW-001.

[4] Only one Priority Pollutant sample is required from the receiving water each year (either at RSW-001 or RSW-005, depending on where discharge is occurring)

B. Monitoring Location RSW-003/-004 (Discharge D-002)

1. The Discharger shall monitor **the M&T Canal** at **RSW-003 and RSW-004 when discharging at D-002** as follows:

Table E-6. Receiving Water Monitoring Requirements

Parameter	Units	Sample Type	Minimum Sampling Frequency	Required Analytical Test Method
pH	pH Units	Grab	1/month	[1]
Turbidity	NTU	Grab	1/month	[1]
Dissolved Oxygen	mg/L	Grab	1/month	[1]
Temperature	°F (°C)	Grab	1/month	[1]
Total Copper[3]	µg/L	Grab	Monthly	[1]
Dichlorobromomethane[3]	µg/L	Grab	Monthly	[1]
Chlorodibromomethane[3]	µg/L	Grab	Monthly	[1]

[1] Pollutants shall be analyzed using the analytical methods described in 40 CFR Part 136; for priority pollutants the methods must meet the lowest minimum levels (MLs) specified in Attachment 4 of the SIP, where no methods are specified for a given pollutant, by methods approved by this Regional Water Board or the State Water Board.

[2] Receiving water hardness and pH shall be determined at RSW-003 the same time. These samples shall be taken the same day as effluent samples for priority pollutants are taken.

[3] Required only at RSW-003.

C. Monitoring Location RSW-005/-006 (Discharge D-003)

1. The Discharger shall monitor **the Sacramento River** at **RSW-005 and RSW-006 when discharging at D-003** as follows:

Table E-7. Receiving Water Monitoring Requirements RSW-005/-006

Parameter	Units	Sample Type	Minimum Sampling Frequency	Required Analytical Test Method
pH	pH Units	Grab	1/month	[1]
Turbidity	NTU	Grab	1/month	[1]
Dissolved Oxygen	mg/L	Grab	1/month	[1]
Temperature	°F (°C)	Grab	1/month	[1]
Priority Pollutants[2,3,4]	ug/L	Grab	1/year	[1]
Total Copper[3]	µg/L	Grab	Monthly	[1]
Dichlorobromomethane[3]	µg/L	Grab	Monthly	[1]
Chlorodibromomethane[3]	µg/L	Grab	Monthly	[1]

[1] Pollutants shall be analyzed using the analytical methods described in 40 CFR Part 136; for priority pollutants the methods must meet the lowest minimum levels (MLs) specified in Attachment 4 of the SIP, where no methods are specified for a given pollutant, by methods approved by this Regional Water Board or the State Water Board.

[2] Receiving water hardness and pH shall be determined at RSW-005 the same time. These samples shall be taken the same day as effluent samples for priority pollutants are taken.

[3] Required only at RSW-005.

[4] Only one Priority Pollutant sample is required from the receiving water each year (either at RSW-001 or RSW-005, depending on where discharge is occurring)

D. Receiving Water Conditions

In conducting the receiving water sampling, a log shall be kept of the receiving water conditions. Attention shall be given to the presence or absence of:

a. Floating or suspended matter
b. Discoloration
c. Bottom deposits
d. Aquatic life
e. Visible films, sheens or coatings
f. Fungi, slimes, or objectable growths
g. Potential nuisance conditions

Notes on receiving water conditions shall be summarized in the monitoring report.

IX. OTHER MONITORING REQUIREMENTS

A. Biosolids

1. Monitoring Location BIO-001

a. A composite sample of sludge shall be collected **annually** at Monitoring Location BIO-001 in accordance with EPA's *POTW Sludge Sampling and Analysis Guidance Document*, August 1989, and tested for priority pollutants listed in 40 CFR Part 122, Appendix D, Tables II and III (excluding total phenols).

b. A composite sample of sludge shall be collected **annually** at Monitoring Location BIO-001 in accordance with USEPA's *POTW Sludge Sampling and Analysis Guidance Document*, August 1989, and tested for the metals listed in Title 22.

c. Sampling records shall be retained for a minimum of **5 years**. A log shall be maintained of sludge quantities generated and of handling and disposal activities. The frequency of entries is discretionary; however, the log must be complete enough to serve as a basis for part of the annual report.

d. Upon removal of sludge, the Discharger shall submit characterization of sludge quality, including sludge percent solids and the most recent quantitative results of chemical analysis for the priority pollutants listed in 40 CFR Part 122, Appendix D, Tables II and III (excluding total phenols). In addition to USEPA's POTW *Sludge Sampling and Analysis Guidance Document*, August 1989, suggested methods for analysis of sludge are provided in USEPA publications titled *Test Methods for Evaluating Solid Waste: Physical/Chemical Methods* and *Test Methods for Organic Chemical Analysis of Municipal and Industrial Wastewater*. Recommended analytical holding times for sludge samples should reflect those specified in 40 CFR 136.6.3(e). Other guidance is available.

B. Municipal Water Supply

1. Monitoring Location SPL-001

The Discharger shall monitor the municipal water supply at SPL-001 as follows. A sampling station shall be established where a representative sample of the municipal water supply can be obtained. Municipal water supply samples shall be collected at approximately the same time as effluent samples.

Table E-8. Municipal Water Supply Monitoring Requirements

Parameter	Units	Sample Type	Minimum Sampling Frequency	Required Analytical Test Method
Total Dissolved Solids[1]	mg/L	Grab	1/year	
Electrical Conductivity @ 25°C[1]	µmhos/cm	Grab	1/year	
Standard Minerals[2]	mg/L	Grab	1/year	

[1] If the water supply is from more than one source, the total dissolved solids and electrical conductivity shall be reported as a weighted average and include copies of supporting calculations.
[2] Standard minerals shall include all major cations and anions and include verification that the analysis is complete (i.e., cation/anion balance).

X. REPORTING REQUIREMENTS

A. General Monitoring and Reporting Requirements

1. The Discharger shall comply with all Standard Provisions (Attachment D) related to monitoring, reporting, and recordkeeping.

2. Upon written request of the Regional Water Board, the Discharger shall submit a summary monitoring report. The report shall contain both tabular and graphical summaries of the monitoring data obtained during the previous year(s).

3. **Compliance Time Schedules.** For compliance time schedules included in the Order, the Discharger shall submit to the Regional Water Board, on or before each compliance due date, the specified document or a written report detailing compliance or noncompliance with the specific date and task. If noncompliance is reported, the Discharger shall state the reasons for noncompliance and include an estimate of the date when the Discharger will be in compliance. The Discharger shall notify the Regional Water Board by letter when it returns to compliance with the compliance time schedule.

4. The Discharger shall report to the Regional Water Board any toxic chemical release data it reports to the State Emergency Response Commission within 15 days of reporting the data to the Commission pursuant to section 313 of the "*Emergency Planning and Community Right to Know Act*" of 1986.

B. Self Monitoring Reports (SMRs)

1. At any time during the term of this permit, the State Water Board or the Regional Water Board may notify the Discharger to electronically submit Self-Monitoring Reports (SMRs) using the State Water Board's California Integrated Water Quality System (CIWQS) Program Web site (http://www.waterboards.ca.gov/ciwqs/index.html). Until such notification is given, the Discharger shall submit hard copy SMRs. The CIWQS Web site will provide additional directions for SMR submittal in the event there will be service interruption for electronic submittal.

2. The Discharger shall report in the SMR the results for all monitoring specified in this Monitoring and Reporting Program under sections III through IX. The Discharger shall submit **monthly** SMRs including the results of all required monitoring using USEPA-approved test methods or other test methods specified in this Order. If the Discharger monitors any pollutant more frequently than required by this Order, the results of this monitoring shall be included in the calculations and reporting of the data submitted in the SMR.

3. Monitoring periods and reporting for all required monitoring shall be completed according to the following schedule:

Table E-9. Monitoring Periods and Reporting Schedule

Sampling Frequency	Monitoring Period Begins On…	Monitoring Period	SMR Due Date
Continuous	**First day of the calendar month following the permit effective date or on permit effective date if that date is first day of the month**	All	Submit with **monthly** SMR
1/Day	**First day of the calendar month following the permit effective date or on permit effective date if that date is first day of the month**	(Midnight through 11:59 PM) or any 24-hour period that reasonably represents a calendar day for purposes of sampling.	Submit with **monthly** SMR
1/Day	**First day of the calendar month following the permit effective date or on permit effective date if that date is first day of the month**	(Midnight through 11:59 PM) or any 24-hour period that reasonably represents a calendar day for purposes of sampling.	Submit with **monthly** SMR
1/Week	**First Sunday of the calendar month following the permit effective date or on permit effective date if on a Sunday**	Sunday through Saturday	Submit with **monthly** SMR
1/Month	**First day of calendar month following permit effective date or on permit effective date if that date is first day of the month**	First day of calendar month through last day of calendar month	**32** days from the end of the monitoring period
1/Quarter	**Closest of 1 January, 1 April, 1 July, or 1 October following (or on) permit effective date**	1 January through 1 March 1 April through 30 June 1 July through 30 September 1 October through 31 December	**32** days from the end of the monitoring period
1/Year	**1 January following (or on) permit effective date**	1 January through 31 December	**32** days from the end of the monitoring period

4. **Reporting Protocols.** The Discharger shall report with each sample result the applicable reported Minimum Level (ML) and the current Method Detection Limit (MDL), as determined by the procedure in 40 CFR Part 136.

   The Discharger shall report the results of analytical determinations for the presence of chemical constituents in a sample using the following reporting protocols:

   a. Sample results greater than or equal to the reported ML shall be reported as measured by the laboratory (i.e., the measured chemical concentration in the sample).

   b. Sample results less than the RL, but greater than or equal to the laboratory's MDL, shall be reported as "Detected, but Not Quantified," or DNQ. The estimated chemical concentration of the sample shall also be reported.

   For the purposes of data collection, the laboratory shall write the estimated chemical concentration next to DNQ as well as the words "Estimated

Concentration" (may be shortened to "Est. Conc."). The laboratory may, if such information is available, include numerical estimates of the data quality for the reported result. Numerical estimates of data quality may be percent accuracy (+ a percentage of the reported value), numerical ranges (low to high), or any other means considered appropriate by the laboratory.

c. Sample results less than the laboratory's MDL shall be reported as "Not Detected," or ND.

d. Dischargers are to instruct laboratories to establish calibration standards so that the ML value (or its equivalent if there is differential treatment of samples relative to calibration standards) is the lowest calibration standard. At no time is the Discharger to use analytical data derived from extrapolation beyond the lowest point of the calibration curve.

5. Compliance Determination. Compliance with effluent limitations for priority pollutants shall be determined using sample reporting protocols defined above and in Attachment A of this Order. For purposes of reporting and administrative enforcement by the Regional Water Board and the State Water Board, the Discharger shall be deemed out of compliance with effluent limitations if the concentration of the priority pollutant in the monitoring sample is greater than the effluent limitation and greater than or equal to the reporting level (RL).

6. Multiple Sample Data. When determining compliance with an AMEL, AWEL, or MDEL for priority pollutants and more than one sample result is available, the Discharger shall compute the arithmetic mean unless the data set contains one or more reported determinations of "Detected, but Not Quantified" (DNQ) or "Not Detected" (ND). In those cases, the Discharger shall compute the median in place of the arithmetic mean in accordance with the following procedure:

a. The data set shall be ranked from low to high, ranking the reported ND determinations lowest, DNQ determinations next, followed by quantified values (if any). The order of the individual ND or DNQ determinations is unimportant.

b. The median value of the data set shall be determined. If the data set has an odd number of data points, then the median is the middle value. If the data set has an even number of data points, then the median is the average of the two values around the middle unless one or both of the points are ND or DNQ, in which case the median value shall be the lower of the two data points where DNQ is lower than a value and ND is lower than DNQ.

7. The Discharger shall submit SMRs in accordance with the following requirements:

a. The Discharger shall arrange all reported data in a tabular format. The data shall be summarized to clearly illustrate whether the facility is operating in compliance with interim and/or final effluent limitations. The Discharger is not required to duplicate the submittal of data that is entered in a tabular format within CIWQS. When electronic submittal of data is required and CIWQS does not provide for

entry into a tabular format within the system, the Discharger shall electronically submit the data in a tabular format as an attachment.

b. The Discharger shall attach a cover letter to the SMR. The information contained in the cover letter shall clearly identify violations of the WDRs; discuss corrective actions taken or planned; and the proposed time schedule for corrective actions. Identified violations must include a description of the requirement that was violated and a description of the violation.

c. SMRs must be submitted to the Regional Water Board, signed and certified as required by the Standard Provisions (Attachment D), to the address listed below:

Regional Water Quality Control Board
Central Valley Region
NPDES South Regulatory Unit
415 Knollcrest Drive, Suite 100
Redding, CA 96002

C. Discharge Monitoring Reports (DMRs)

1. As described in section X.B.1 above, at any time during the term of this permit, the State Water Board or Regional Water Board may notify the Discharger to electronically submit SMRs that will satisfy federal requirements for submittal of Discharge Monitoring Reports (DMRs). Until such notification is given, the Discharger shall submit DMRs in accordance with the requirements described below.

2. DMRs must be signed and certified as required by the standard provisions (Attachment D). The Discharger shall submit the original DMR and one copy of the DMR to the address listed below:

STANDARD MAIL	FEDEX/UPS/ OTHER PRIVATE CARRIERS
State Water Resources Control Board Division of Water Quality c/o DMR Processing Center PO Box 100 Sacramento, CA 95812-1000	State Water Resources Control Board Division of Water Quality c/o DMR Processing Center 1001 I Street, 15th Floor Sacramento, CA 95814

3. All discharge monitoring results must be reported on the official USEPA pre-printed DMR forms (EPA Form 3320-1). Forms that are self-generated will not be accepted unless they follow the exact same format of EPA Form 3320-1.

D. Other Reports

1. Progress Reports. As specified in the compliance time schedules required in the Special Provisions contained in section VI of the Order, progress reports shall be submitted in accordance with the following reporting requirements. At minimum, the

progress reports shall include a discussion of the status of final compliance, whether the Discharger is on schedule to meet the final compliance date, and the remaining tasks to meet the final compliance date.

Table E-10. Reporting Requirements for Special Provisions Progress Reports

Special Provision	Reporting Requirements
Constituent Study	**30 January, until final compliance**
Mixing Zone and Dilution Study	**30 January, until final compliance**
Pollution Prevention Plans for **copper, chlorodibromomethane and dichlorobromomethane**	**30 January, until final compliance**
Salinity Evaluation and Minimization Study	**30 January, until final compliance**

2. The Discharger shall report the results of any **special studies, acute and chronic toxicity testing, TRE/TIE, PMP, and Pollution Prevention Plan** required by Special Provisions VI.C.2 of this Order. The Discharger shall report the progress in satisfaction of compliance schedule dates specified in the Special Provision at section VI.C.7 of this Order . The Discharger shall submit reports **with the first monthly SMR scheduled to be submitted on or immediately following the report due date**.

3. Within 60 days of permit adoption, the Discharger shall submit a report outlining minimum levels, method detection limits, and analytical methods for approval, with a goal to achieve detection levels below applicable water quality criteria. At a minimum, the Discharger shall comply with the monitoring requirements for CTR constituents as outlined in section 2.3 and 2.4 of the SIP.

4. The Discharger's sanitary sewer system collects wastewater using sewers, pipes, pumps, and/or other conveyance systems and directs the raw sewage to the wastewater treatment plant. A "sanitary sewer overflow" is defined as a discharge to ground or surface water from the sanitary sewer system at any point upstream of the wastewater treatment plant. Sanitary sewer overflows are prohibited by this Order. All violations must be reported as required in Standard Provisions. Facilities (such as wet wells, regulated impoundments, tanks, highlines, etc.) may be part of a sanitary sewer system and discharges to these facilities are not considered sanitary sewer overflows, provided that the waste is fully contained within these temporary storage facilities.

5. **Annual Operations Report.** By 30 January of each year, the Discharger shall submit a written report to the Executive Officer containing the following:

   a. The names, certificate grades, and general responsibilities of all persons employed at the Facility.

b. The names and telephone numbers of persons to contact regarding the plant for emergency and routine situations.

c. A statement certifying when the flow meter(s) and other monitoring instruments and devices were last calibrated, including identification of who performed the calibration.

d. A statement certifying whether the current operation and maintenance manual, and contingency plan, reflect the wastewater treatment plant as currently constructed and operated, and the dates when these documents were last revised and last reviewed for adequacy.

e. The Discharger may also be requested to submit an annual report to the Regional Water Board with both tabular and graphical summaries of the monitoring data obtained during the previous year. Any such request shall be made in writing. The report shall discuss the compliance record. If violations have occurred, the report shall also discuss the corrective actions taken and planned to bring the discharge into full compliance with the waste discharge requirements.

6. Annual Pretreatment Reporting Requirements. The Discharger shall submit annually a report to the Regional Water Board, with copies to USEPA Region 9 and the State Water Board, describing the Discharger's pretreatment activities over the previous 12 months. In the event that the Discharger is not in compliance with any conditions or requirements of this Order, including noncompliance with pretreatment audit/compliance inspection requirements, then the Discharger shall also include the reasons for noncompliance and state how and when the Discharger shall comply with such conditions and requirements.

An annual report shall be submitted by **28 February** and include at least the following items:

a. A summary of analytical results from representative, flow proportioned, 24-hour composite sampling of the POTW's influent and effluent for those pollutants USEPA has identified under Section 307(a) of the CWA which are known or suspected to be discharged by industrial users.

Sludge shall be sampled during the same 24-hour period and analyzed for the same pollutants as the influent and effluent sampling and analysis. The sludge analyzed shall be a composite sample of a minimum of 12 discrete samples taken at equal time intervals over the 24-hour period. Wastewater and sludge sampling and analysis shall be performed at least annually. The discharger shall also provide any influent, effluent or sludge monitoring data for nonpriority pollutants which may be causing or contributing to Interference, Pass-Through or adversely impacting sludge quality. Sampling and analysis shall be performed in accordance with the techniques prescribed in 40 CFR Part 136 and amendments thereto.

b. A discussion of Upset, Interference, or Pass-Through incidents, if any, at the treatment plant, which the Discharger knows or suspects were caused by industrial users of the POTW. The discussion shall include the reasons why the incidents occurred, the corrective actions taken and, if known, the name and address of, the industrial user(s) responsible. The discussion shall also include a review of the applicable pollutant limitations to determine whether any additional limitations, or changes to existing requirements, may be necessary to prevent Pass-Through, Interference, or noncompliance with sludge disposal requirements.

c. The cumulative number of industrial users that the Discharger has notified regarding Baseline Monitoring Reports and the cumulative number of industrial user responses.

d. An updated list of the Discharger's industrial users including their names and addresses, or a list of deletions and additions keyed to a previously submitted list. The Discharger shall provide a brief explanation for each deletion. The list shall identify the industrial users subject to federal categorical standards by specifying which set(s) of standards are applicable. The list shall indicate which categorical industries, or specific pollutants from each industry, are subject to local limitations that are more stringent than the federal categorical standards. The Discharger shall also list the noncategorical industrial users that are subject only to local discharge limitations. The Discharger shall characterize the compliance status through the year of record of each industrial user by employing the following descriptions:

i. complied with baseline monitoring report requirements (where applicable);

ii. consistently achieved compliance;

iii. inconsistently achieved compliance;

iv. significantly violated applicable pretreatment requirements as defined by 40 CFR 403.8(f)(2)(vii);

v. complied with schedule to achieve compliance (include the date final compliance is required);

vi. did not achieve compliance and not on a compliance schedule; and

vii. compliance status unknown.

A report describing the compliance status of each industrial user characterized by the descriptions in items iii. through vii. above shall be submitted for each calendar quarter **within 30 days of the end of the quarter**. The report shall identify the specific compliance status of each such industrial user and shall also identify the compliance status of the POTW with regards to audit/pretreatment compliance inspection requirements. If none of the aforementioned conditions

exist, at a minimum, a letter indicating that all industries are in compliance and no violations or changes to the pretreatment program have occurred during the quarter must be submitted. The information required in the fourth quarter report shall be included as part of the annual report. This quarterly reporting requirement shall commence upon issuance of this Order.

e. A summary of the inspection and sampling activities conducted by the Discharger during the past year to gather information and data regarding the industrial users. The summary shall include:

i. the names and addresses of the industrial users subjected to surveillance and an explanation of whether they were inspected, sampled, or both and the frequency of these activities at each user; and

ii. the conclusions or results from the inspection or sampling of each industrial user.

f. A summary of the compliance and enforcement activities during the past year. The summary shall include the names and addresses of the industrial users affected by the following actions:

i. Warning letters or notices of violation regarding the industrial users' apparent noncompliance with federal categorical standards or local discharge limitations. For each industrial user, identify whether the apparent violation concerned the federal categorical standards or local discharge limitations.

ii. Administrative orders regarding the industrial users noncompliance with federal categorical standards or local discharge limitations. For each industrial user, identify whether the violation concerned the federal categorical standards or local discharge limitations.

iii. Civil actions regarding the industrial users' noncompliance with federal categorical standards or local discharge limitations. For each industrial user, identify whether the violation concerned the federal categorical standards or local discharge limitations.

iv. Criminal actions regarding the industrial users noncompliance with federal categorical standards or local discharge limitations. For each industrial user, identify whether the violation concerned the federal categorical standards or local discharge limitations.

v. Assessment of monetary penalties. For each industrial user identify the amount of the penalties.

vi. Restriction of flow to the POTW.

vii. Disconnection from discharge to the POTW.

g. A description of any significant changes in operating the pretreatment program which differ from the information in the Discharger's approved Pretreatment Program including, but not limited to, changes concerning: the program's administrative structure, local industrial discharge limitations, monitoring program or monitoring frequencies, legal authority or enforcement policy, funding mechanisms, resource requirements, or staffing levels.

h. A summary of the annual pretreatment budget, including the cost of pretreatment program functions and equipment purchases.

Duplicate signed copies of these Pretreatment Program reports shall be submitted to the Regional Water Board and the:

State Water Resources Control Board
Division of Water Quality
1001 I Street or P.O. Box 100
Sacramento, CA 95812

and the

Regional Administrator
U.S. Environmental Protection Agency W-5
75 Hawthorne Street
San Francisco, CA 94105

ATTACHMENT F – FACT SHEET

Table of Contents

I. Permit Information F-3
II. Facility Description F-4
A. Description of Wastewater and Biosolids Treatment or Controls F-4
B. Discharge Points and Receiving Waters F-4
C. Summary of Historical Requirements and Self-Monitoring Report (SMR) Data F-5
D. Compliance Summary F-6
E. Planned Changes F-6
III. Applicable Plans, Policies, and Regulations F-7
A. Legal Authorities F-7
B. California Environmental Quality Act (CEQA) F-7
C. State and Federal Regulations, Policies, and Plans F-7
D. Impaired Water Bodies on CWA 303(d) List F-8
E. Other Plans, Polices and Regulations F-9
IV. Rationale For Effluent Limitations and Discharge Specifications F-9
A. Discharge Prohibitions F-10
B. Technology-Based Effluent Limitations F-11
1. Scope and Authority F-11
2. Applicable Technology-Based Effluent Limitations F-11
C. Water Quality-Based Effluent Limitations (WQBELs) F-12
1. Scope and Authority F-12
2. Applicable Beneficial Uses and Water Quality Criteria and Objectives F-13
3. Determining the Need for WQBELs F-21
4. WQBEL Calculations F-31
5. Whole Effluent Toxicity (WET) F-34
D. Final Effluent Limitations F-36
1. Mass-based Effluent Limitations F-38
2. Averaging Periods for Effluent Limitations F-38
3. Satisfaction of Anti-Backsliding Requirements F-38
4. Satisfaction of Antidegradation Policy F-39
E. Interim Effluent Limitations – Not Applicable F-40
F. Land Discharge Specifications – Emergency Storage Ponds F-40
G. Reclamation Specifications – Not Applicable F-40
V. Rationale for Receiving Water Limitations F-40
A. Surface Water F-40
B. Groundwater – Not Applicable F-43
VI. Rationale for Monitoring and Reporting Requirements F-43
A. Influent Monitoring F-44
B. Effluent Monitoring F-44
C. Whole Effluent Toxicity Testing Requirements F-44
D. Receiving Water Monitoring F-45
1. Surface Water F-45
2. Groundwater – Not Applicable F-45

E. Other Monitoring Requirements F-45
1. Biosolids Monitoring F-45
2. Water Supply Monitoring F-45
3. Industrial Pretreatment Program Monitoring F-45
VII. Rationale for Provisions F-45
A. Standard Provisions F-45
B. Special Provisions F-46
1. Reopener Provisions F-46
2. Special Studies and Additional Monitoring Requirements F-47
3. Best Management Practices and Pollution Prevention F-50
4. Construction, Operation, and Maintenance Specifications F-52
5. Special Provisions for Municipal Facilities (POTWs Only) F-53
6. Other Special Provisions F-54
7. Compliance Schedules – Not Applicable F-55
VIII. Public Participation F-55
A. Notification of Interested Parties F-55
B. Written Comments F-55
C. Public Hearing F-55
D. Waste Discharge Requirements Petitions F-56
E. Information and Copying F-56
F. Register of Interested Persons F-56
G. Additional Information F-56

List of Tables

Table F-1. Facility Information F-3
Table F-2. Historic Effluent Limitations and Monitoring Data F-5
Table F-3. Summary of Technology-based Effluent Limitations, ... F-12
Table F-4. Basin Plan Beneficial Uses F-14
Table F-5. Copper ECA Evaluation F-19
Table F-6. Salinity Water Quality Criteria/Objectives F-29
Table F-7. WQBEL Calculations for Ammonia at Discharge Point No. D-001/003 ..... F-32
Table F-8. WQBEL Calculations for Chlorodibromomethane at Discharge Point No. D-001/002/003 F-32
Table F-9. WQBEL Calculations for Dichlorobromomethane at Discharge Point No. D-001/002/003 F-33
Table F-10. WQBEL Calculations for Copper at Discharge Point No. D-001/003 ..... F-33
Table F-11. Summary of Final Effluent Limitations Discharge Point No. D-001/002/003.... F-37
Table F-12. Constituent Study F-50
Table F-13 Mixing Zone and Dilution Study F-50
Table F-14 Pollution Prevention Plans F-51
Table F-15 Salinity Evaluation and Minimization Study F-52

ATTACHMENT F – FACT SHEET

As described in the Findings in section II of this Order, this Fact Sheet includes the legal requirements and technical rationale that serve as the basis for the requirements of this Order.

This Order has been prepared under a standardized format to accommodate a broad range of discharge requirements for Dischargers in California. Only those sections or subsections of this Order that are specifically identified as "not applicable" have been determined not to apply to this Discharger. Sections or subsections of this Order not specifically identified as "not applicable" are fully applicable to this Discharger.

I. PERMIT INFORMATION

The following table summarizes administrative information related to the Facility.

Table F-1. Facility Information

WDID	**5A0400102001**
Discharger	**City of Chico**
Name of Facility	**Chico Water Pollution Control Plant, Chico**
Facility Address	**4827 Chico River Road**
	Chico, CA 95927
	Butte County
Facility Contact, Title and Phone	**Marc Sulik, Wastewater Treatment Manager, 530-895-4965**
Authorized Person to Sign and Submit Reports	**Marc Sulik, Wastewater Treatment Manager, 530-895-4965**
Mailing Address	**SAME**
Billing Address	**SAME**
Type of Facility	**POTW**
Major or Minor Facility	**Major**
Threat to Water Quality	**1**
Complexity	**A**
Pretreatment Program	**Y**
Reclamation Requirements	**Not Applicable**
Facility Permitted Flow	**12.0** million gallons per day (mgd)
Facility Design Flow	**12.0** mgd
Watershed	**Sacramento**
Receiving Water	**Sacramento River**
Receiving Water Type	**Sacramento River**

A. **City of Chico** (hereinafter Discharger) is the **owner and operator** of **Chico Water Pollution Control Plant** (hereinafter Facility), a Public owned treatment works.

For the purposes of this Order, references to the "discharger" or "permittee" in applicable federal and state laws, regulations, plans, or policy are held to be equivalent to references to the Discharger herein.

B. The Facility discharges wastewater to Sacramento River **a water** of the United States, and is currently regulated by Order No. **R5-2004-0073** which was adopted on **4 June 2004** and **expired** on **1 June 2009**. **The terms and conditions of the current Order have been automatically continued and remain in effect until new Waste Discharge Requirements (WDRs) and National Pollutant Discharge Elimination System (NPDES) permit are adopted pursuant to this Order.**

C. The Discharger filed a report of waste discharge and submitted an application for renewal of its Waste Discharge Requirements (WDRs) and National Pollutant Discharge Elimination System (NPDES) permit on **26 November 2008**. **Supplemental information was requested on 11 December 2008 and received on 7 January 2009. A site visit was conducted on 2 June 2009, to observe operations and collect additional data to develop permit limitations and conditions.**

II. FACILITY DESCRIPTION

The Discharger provides sewerage service for the community of **Chico** and serves a population of approximately **70,000**. The design daily average flow capacity of the Facility is **12.0** million gallons per day (mgd).

A. Description of Wastewater and Biosolids Treatment or Controls

The treatment system at the Facility consists of screening for removal of large solids, grit removal, primary clarification, activated sludge treatment with secondary clarification, and chlorination/ dechlorination. Sludge is treated by anaerobic digestion followed by mechanical dewatering using solar drying and then disposed at a sanitary landfill.

B. Discharge Points and Receiving Waters

1. The Facility is located in Section **2**, T**21N**, R**1E**, MDB&M, as shown in Attachment B, a part of this Order.

2. Treated municipal wastewater is currently discharged at Discharge Point No. 001 to **Sacramento River**, a water of the United States at a point latitude **121**° **57**' N and longitude **39**° 42' W.

3. The Discharger has the ability to discharge treated effluent to the M&T Canal, an irrigation ditch (Discharge Point No. 002), located at a point latitude **121**° **55**' N and longitude **30**° 42' W. Discharge to the canal is typically for emergency use and has only occurred once in the past 20 years.

4. The Discharger is currently constructing a new discharge point No. 003, approximately 1,200 feet downstream of the existing discharge point. The existing discharge point has to be dredged due to excess sediment accumulations in a gravel bar extending from the confluence of Big Chico Creek, immediately upstream of the existing diffuser.

C. Summary of Historical Requirements and Self-Monitoring Report (SMR) Data

Effluent limitations contained in Order No. **R5-2004-0073** for discharges from Discharge Point No. **001** (Monitoring Location **001**) and representative monitoring data from the term of Order No. **R5-2004-0073** is as follows:

Table F-2. Historic Effluent Limitations and Monitoring Data

Parameter	Units	Effluent Limitation			Monitoring Data (From December 2004 To February 2009)		
		Average Monthly	Average Weekly	Maximum Daily	Highest Average Monthly Discharge	Highest Average Weekly Discharge	Highest Daily Discharge
BOD[a]	mg/L	30	45	90	6.7		12.0
Total Suspended Solids	mg/L	30	45	90	11.3		43.0
Chlorine Residual	mg/L		0.01	0.02[b]	0.100		3.0
Total Coliform Organisms	MPN/ 100 ml	23		500	23		500
pH	pH units	6.0[c]		9.0	7.38		7.85
Average Dry Weather Flow	mgd	9.0			7.59		8.0
Discharge 001							
Total Recoverable Copper	ug/L	81		160	7.8		37.0
Total Recoverable Lead	ug/L	27		53	2.2		3.5
Total Recoverable Zinc	ug/L	1,700		3,300	59.0		120.0
Dichlorobromomethane	ug/L	60		120	11.2		33.0
Chlorodibromomethane	ug/L	41		83	2.0		9.0
Discharge 002 (April 15 through December 15)							
Total Recoverable Copper	ug/L	13		26	No Discharge to 002		
Total Recoverable Lead	ug/L	3.9		7.8			
Total Recoverable Zinc	ug/L	220		440			
Dichlorobromomethane	ug/L	5.2		10			
Chlorodibromomethane	ug/L	3.6		7.2			
Discharge 002 (December 16 through April 14)							
Total Recoverable Copper	ug/L	3.3		6.7	No Discharge to 002		
Total Recoverable Lead	ug/L	0.96		1.9			
Total Recoverable Zinc	ug/L	31		62			
Dichlorobromomethane	ug/L	0.56		1.1			
Chlorodibromomethane	ug/L	0.41		0.82			

[a] 5-day, 20°C Biochemical Oxygen Demand (BOD).
[b] 1-hour average
[C] daily minimum

D. Compliance Summary

The following is a summary of violations noted during the monthly monitoring and reporting report since the last permit cycle:

Occurrence Date	Violation Description
07/04/2004	Chlorine Residual Violation - $3,000 mandatory minimum penalty assessed
03/16/2005	Chlorine Residual Violation - $3,000 mandatory minimum penalty assessed
12/09/2006	Chlorine Residual Violation - $3,000 mandatory minimum penalty assessed
08/21/2007	Chlorine Residual Violation - $100,000 discretionary administrative civil liability assessed (combined with 09/04/2007)
09/04/2007	Chlorine Residual Violation - $100,000 discretionary administrative civil liability assessed (combined with 08/21/2007)
05/16/2008	Chlorine Residual Violation - $153,000 discretionary administrative civil liability assessed (combined with 06/15/2008)
06/15/2008	Chlorine Residual Violation - $153,000 discretionary administrative civil liability assessed (combined with 05/16/2008)

E. Planned Changes

The Discharger is currently in the process of upgrading the existing water pollution control plant by installing/upgrading the following components. Additionally, the design average dry weather flow of the plant will be increased from 9.0 mgd to 12.0 mgd. The treatment plant is not expected to exceed the average dry weather flow of 9.0 mgd until 2010, and will not exceed the 12.0 mgd flow until 2017.

Process	Major Components
Influent sewers	Improvements to the influent sewers and junction boxes
Headworks	Improvements to the influent screening, grit removal, flow metering, odor control, and chemical addition
Primary Treatment	Improvements to the primary effluent pumps
Secondary Treatment	Improvements to the aeration tanks, secondary clarifiers, return activated sludge pumping and blowers
Chlorination	Chlorine contact tank improvements, outfall gate improvements, hyprochlorite improvements, and chemical tank replacement
Effluent Disposal	Replace outfall diffuser and pipeline
Sludge Stabilization	Improve anaerobic digestion
Sludge Dewatering	Improve mechanical dewatering, sludge stockpile area
Electrical Power system	Improve power supply, standby generator, and cogeneration
Instrumentation and Control	Improve instrumentation and control system
Support Facilities	Improvements to No. 2 water system and No. 3. water pumping and yard piping

III. APPLICABLE PLANS, POLICIES, AND REGULATIONS

The requirements contained in this Order are based on the applicable plans, policies, and regulations identified in the Findings in section II of this Order. The applicable plans, policies, and regulations relevant to the discharge include the following:

A. Legal Authorities

This Order is issued pursuant to regulations in the Clean Water Act (CWA) and the California Water Code (CWC) as specified in the Finding contained at section II.C of this Order.

B. California Environmental Quality Act (CEQA)

This Order meets the requirements of CEQA as specified in the Finding contained at section II.E of this Order.

C. State and Federal Regulations, Policies, and Plans

1. **Water Quality Control Plans.** This Order implements the following water quality control plans as specified in the Finding contained at section II.H of this Order.

   a. ***Water Quality Control Plan, Fourth Edition (Revised February 2007), for the Sacramento and San Joaquin River Basins*** (Basin Plan)

   b. *Water Quality Control Plan for Control of Temperature in the Coastal and Interstate Water and Enclosed Bays and Estuaries of California* (Thermal Plan)

2. **National Toxics Rule (NTR) and California Toxics Rule (CTR).** This Order implements the NTR and CTR as specified in the Finding contained at section II.I of this Order.

3. **State Implementation Policy (SIP).** This Order implements the SIP as specified in the Finding contained at section II.I of this Order.

4. **Alaska Rule.** This Order is consistent with the Alaska Rule as specified in the Finding contained at section II.L of this Order.

5. **Antidegradation Policy.** As specified in the Finding contained at section II.N of this Order and as discussed in detail in the Fact Sheet (Attachment F, Section IV.D.4.), the discharge **is** consistent with the antidegradation provisions of 40 CFR section 131.12 and State Water Resources Control Board (State Water Board) Resolution 68-16.

6. **Anti-Backsliding Requirements.** This Order is consistent with anti-backsliding policies as specified in the Finding contained at section II.M of this Order. Compliance with the anti-backsliding requirements is discussed in the Fact Sheet (Attachment F, Section IV.D.3).

7. Emergency Planning and Community Right to Know Act

Section 13263.6(a) of the CWC, requires that "*the Regional Water Board shall prescribe effluent limitations as part of the waste discharge requirements of a POTW for all substances that the most recent toxic chemical release data reported to the state emergency response commission pursuant to Section 313 of the Emergency Planning and Community Right to Know Act of 1986 (42 U.S.C. Sec. 11023) (EPCRA) indicate as discharged into the POTW, for which the State Water Board or the Regional Water Board has established numeric water quality objectives, and has determined that the discharge is or may be discharged at a level which will cause, have the reasonable potential to cause, or contribute to, an excursion above any numeric water quality objective*".

The Regional Water Board has adopted a numeric receiving water objectives for **copper, chlorodibromomethane and dichlorobromomethane, for the receiving waters involved in this discharge**. As detailed elsewhere in this Permit, available effluent quality data indicate that effluent concentrations of **copper, chlorodibromomethane and dichlorobromomethane** does have a reasonable potential to cause or contribute to an excursion above numeric water quality objectives for included within the Basin Plan. Effluent limitations for **copper, chlorodibromomethane and dichlorobromomethane** are included in this permit pursuant to CWC section 13263.6(a).

8. Storm Water Requirements

USEPA promulgated federal regulations for storm water on 16 November 1990 in 40 CFR Parts 122, 123, and 124. The NPDES Industrial Storm Water Program regulates storm water discharges from wastewater treatment facilities. Wastewater treatment plants are applicable industries under the storm water program and are obligated to comply with the federal regulations. The Discharger has indicated that all stormwater is redirected to the headworks, therefore the NPDES Industrial Storm Water Program is not applicable to this facility.

9. Endangered Species Act. This Order is consistent with the Endangered Species Act as specified in the Finding contained at section II.P of this Order.

D. Impaired Water Bodies on CWA 303(d) List

1. Under section 303(d) of the 1972 CWA, states, territories and authorized tribes are required to develop lists of water quality limited segments. The waters on these lists do not meet water quality standards, even after point sources of pollution have installed the minimum required levels of pollution control technology. On 30 November 2006 USEPA gave final approval to California's 2006 section 303(d) List of Water Quality Limited Segments. The Basin Plan references this list of Water Quality Limited Segments (WQLSs), which are defined as "…*those sections of lakes, streams, rivers or other fresh water bodies where water quality does not meet (or is not expected to meet) water quality standards even after the application of appropriate limitations for point sources* (40 CFR Part 130, et seq.)." The Basin

Plan also states, "*Additional treatment beyond minimum federal standards will be imposed on dischargers to [WQLSs]. Dischargers will be assigned or allocated a maximum allowable load of critical pollutants so that water quality objectives can be met in the segment*." The listing for the **Sacramento River** includes: **mercury and unknown toxicity**.

2. **Total Maximum Daily Loads (TMDLs).** USEPA requires the Regional Water Board to develop TMDLs for each 303(d) listed pollutant and water body combination. **A TMDL has been proposed for the section of the Sacramento River from Red Bluff to Knights Landing for mercury and unknown toxicity. It is anticipated to be completed by 2019**.

3. The 303(d) listings and TMDLs have been considered in the development of the Order. A pollutant-by-pollutant evaluation of each pollutant of concern is described in section VI.C.3. of this Fact Sheet.

E. Other Plans, Polices and Regulations

1. The discharge authorized herein and the treatment and storage facilities associated with the discharge of treated municipal wastewater, except for discharges of residual sludge and solid waste, are exempt from the requirements of Title 27, California Code of Regulations (CCR), section 20005 *et seq.* (hereafter Title 27). The exemption, pursuant to Title 27 CCR section 20090(a), is based on the following:

   a. The waste consists primarily of domestic sewage and treated effluent;

   b. The waste discharge requirements are consistent with water quality objectives; and

   c. The treatment and storage facilities described herein are associated with a municipal wastewater treatment plant.

IV. RATIONALE FOR EFFLUENT LIMITATIONS AND DISCHARGE SPECIFICATIONS

Effluent limitations and toxic and pretreatment effluent standards established pursuant to sections 301 (Effluent Limitations), 302 (Water Quality Related Effluent Limitations), 304 (Information and Guidelines), and 307 (Toxic and Pretreatment Effluent Standards) of the CWA and amendments thereto are applicable to the discharge.

The CWA mandates the implementation of effluent limitations that are as stringent as necessary to meet water quality standards established pursuant to state or federal law [33 U.S.C., §1311(b)(1)(C); 40 CFR 122.44(d)(1)]. NPDES permits must incorporate discharge limits necessary to ensure that water quality standards are met. This requirement applies to narrative criteria as well as to criteria specifying maximum amounts of particular pollutants. Pursuant to federal regulations, 40 CFR 122.44(d)(1)(i), NPDES permits must contain limits that control all pollutants that "*are or may be discharged at a level which will cause, have the reasonable potential to cause, or contribute to an excursion above any*

state water quality standard, including state narrative criteria for water quality." Federal regulations, 40 CFR 122.44(d)(1)(vi), further provide that "[w]*here a state has not established a water quality criterion for a specific chemical pollutant that is present in an effluent at a concentration that causes, has the reasonable potential to cause, or contributes to an excursion above a narrative criterion within an applicable State water quality standard, the permitting authority must establish effluent limits*."

The CWA requires point source dischargers to control the amount of conventional, non-conventional, and toxic pollutants that are discharged into the waters of the United States. The control of pollutants discharged is established through effluent limitations and other requirements in NPDES permits. There are two principal bases for effluent limitations in the Code of Federal Regulations: 40 CFR 122.44(a) requires that permits include applicable technology-based limitations and standards; and 40 CFR 122.44(d) requires that permits include WQBELs to attain and maintain applicable numeric and narrative water quality criteria to protect the beneficial uses of the receiving water where numeric water quality objectives have not been established. The Basin Plan at page **IV-17.00,** contains an implementation policy, **"*Policy for Application of Water Quality Objectives*"**, that specifies that the Regional Water Board "*will, on a case-by-case basis, adopt numerical limitations in orders which will implement the narrative objectives*." This Policy complies with 40 CFR 122.44(d)(1). With respect to narrative objectives, the Regional Water Board must establish effluent limitations using one or more of three specified sources, including: (1) USEPA's published water quality criteria, (2) a proposed state criterion (i.e., water quality objective) or an explicit state policy interpreting its narrative water quality criteria (i.e., the Regional Water Board's "*Policy for Application of Water Quality Objectives*")(40 CFR 122.44(d)(1)(vi)(A), (B) or (C)), or (3) an indicator parameter.

The Basin Plan includes numeric site-specific water quality objectives and narrative objectives for toxicity, chemical constituents, discoloration, radionuclides, and tastes and odors. The narrative toxicity objective states: "*All waters shall be maintained free of toxic substances in concentrations that produce detrimental physiological responses in human, plant, animal, or aquatic life*." (Basin Plan at III-8.00.) The Basin Plan states that material and relevant information, including numeric criteria, and recommendations from other agencies and scientific literature will be utilized in evaluating compliance with the narrative toxicity objective. The narrative chemical constituents objective states that waters shall not contain chemical constituents in concentrations that adversely affect beneficial uses. At minimum, "…*water designated for use as domestic or municipal supply (MUN) shall not contain concentrations of chemical constituents in excess of the maximum contaminant levels (MCLs)" in Title 22 of CCR.* The Basin Plan further states that, to protect all beneficial uses, the Regional Water Board may apply limits more stringent than MCLs. The narrative tastes and odors objective states: *"Water shall not contain taste- or odor-producing substances in concentrations that impart undesirable tastes or odors to domestic or municipal water supplies or to fish flesh or other edible products of aquatic origin, or that cause nuisance, or otherwise adversely affect beneficial uses*."

A. Discharge Prohibitions

1. As stated in section I.G of Attachment D, Standard Provisions, this Order prohibits bypass from any portion of the treatment facility. Federal regulations,

40 CFR 122.41(m), define "bypass" as the intentional diversion of waste streams from any portion of a treatment facility. This section of the federal regulations, 40 CFR 122.41(m)(4), prohibits bypass unless it is unavoidable to prevent loss of life, personal injury, or severe property damage. In considering the Regional Water Board's prohibition of bypasses, the State Water Board adopted a precedential decision, Order No. WQO 2002-0015, which cites the federal regulations, 40 CFR 122.41(m), as allowing bypass only for essential maintenance to assure efficient operation, provided that the bypass does not cause violation of effluent and/or receiving water limitations.

B. Technology-Based Effluent Limitations

1. Scope and Authority

Section 301(b) of the CWA and implementing USEPA permit regulations at 40 CFR 122.44 require that permits include conditions meeting applicable technology-based requirements at a minimum, and any more stringent effluent limitations necessary to meet applicable water quality standards. The discharge authorized by this Order must meet minimum federal technology-based requirements based on **Secondary Treatment Standards at 40 CFR Part 133 OR AND/OR Best Professional Judgment (BPJ) in accordance with 40 CFR 125.3**

Regulations promulgated in 40 CFR 125.3(a)(1) require technology-based effluent limitations for municipal Dischargers to be placed in NPDES permits based on Secondary Treatment Standards or Equivalent to Secondary Treatment Standards.

The Federal Water Pollution Control Act Amendments of 1972 (PL 92-500) established the minimum performance requirements for POTWs [defined in section 304(d)(1)]. Section 301(b)(1)(B) of that Act requires that such treatment works must, as a minimum, meet effluent limitations based on secondary treatment as defined by the USEPA Administrator.

Based on this statutory requirement, USEPA developed secondary treatment regulations, which are specified in 40 CFR Part 133. These technology-based regulations apply to all municipal wastewater treatment plants and identify the minimum level of effluent quality attainable by secondary treatment in terms of 5-day biochemical oxygen demand (BOD_5), total suspended solids (TSS), and pH.

2. Applicable Technology-Based Effluent Limitations

a. BOD_5 and TSS. Federal regulations at 40 CFR Part 133, establish the minimum weekly and monthly average level of effluent quality attainable by secondary treatment for BOD_5 and TSS. A daily maximum effluent limitation for BOD_5 and TSS is also included in the Order to ensure that the treatment works are not organically overloaded and operate in accordance with design capabilities. In addition, 40 CFR 133.102, in describing the minimum level of effluent quality attainable by secondary treatment, states that the 30-day average percent

removal shall not be less than 85 percent. This Order contains a limitation requiring an average of 85 percent removal of BOD_5 and TSS over each calendar month.

b. Flow. The Facility was designed to provide a **secondary treatment level** of treatment for up to a design flow of **12.0** mgd. Therefore, this Order contains an average dry weather discharge flow effluent limit of **12.0** mgd.

c. pH. The secondary treatment regulations at 40 CFR Part 133 also require that pH be maintained between 6.0 and 9.0 standard units.

Table F-3. Summary of Technology-based Effluent Limitations, Discharge Point No. D-001

Parameter	Units	Effluent Limitations				
		Average Monthly	Average Weekly	Maximum Daily	Instantaneous Minimum	Instantaneous Maximum
BOD[1]	mg/L	30	45	90		
	lbs/day[2]	3,002	4,504	9,007		
Total Suspended Solids	mg/L	30	45	90		
	lbs/day[2]	3,002	4,504	9,007		
Average Dry Weather Flow	mgd	12.0				
pH	pH units				6.0	9.0

1 5-day, 20°C Biochemical Oxygen Demand (BOD).
2 Based upon a design treatment capacity of 12.0 mgd.

C. Water Quality-Based Effluent Limitations (WQBELs)

1. Scope and Authority

Section 301(b) of the CWA and 40 CFR 122.44(d) require that permits include limitations more stringent than applicable federal technology-based requirements where necessary to achieve applicable water quality standards.

40 CFR 122.44(d)(1)(i) mandates that permits include effluent limitations for all pollutants that are or may be discharged at levels that have the reasonable potential to cause or contribute to an exceedance of a water quality standard, including numeric and narrative objectives within a standard. Where reasonable potential has been established for a pollutant, but there is no numeric criterion or objective for the pollutant, WQBELs must be established using: (1) USEPA criteria guidance under CWA section 304(a), supplemented where necessary by other relevant information; (2) an indicator parameter for the pollutant of concern; or (3) a calculated numeric water quality criterion, such as a proposed state criterion or policy interpreting the state's narrative criterion, supplemented with other relevant information, as provided in 40 CFR 122.44(d)(1)(vi).

The process for determining reasonable potential and calculating WQBELs when necessary is intended to protect the designated uses of the receiving water as specified in the Basin Plan, and achieve applicable water quality objectives and criteria that are contained in other state plans and policies, or any applicable water quality criteria contained in the CTR and NTR.

2. Applicable Beneficial Uses and Water Quality Criteria and Objectives

The Basin Plan designates beneficial uses, establishes water quality objectives, and contains implementation programs and policies to achieve those objectives for all waters addressed through the plan. In addition, the Basin Plan implements State Water Board Resolution No. 88-63, which established state policy that all waters, with certain exceptions, should be considered suitable or potentially suitable for municipal or domestic supply.

The Basin Plan on page II-1.00 states: "*Protection and enhancement of existing and potential beneficial uses are primary goals of water quality planning…*" and with respect to disposal of wastewaters states that "*...disposal of wastewaters is [not] a prohibited use of waters of the State; it is merely a use which cannot be satisfied to the detriment of beneficial uses.*"

The federal CWA section 101(a)(2), states: "*it is the national goal that wherever attainable, an interim goal of water quality which provides for the protection and propagation of fish, shellfish, and wildlife, and for recreation in and on the water be achieved by July 1, 1983.*" Federal Regulations, developed to implement the requirements of the CWA, create a rebuttable presumption that all waters be designated as fishable and swimmable. Federal Regulations, 40 CFR sections 131.2 and 131.10, require that all waters of the State regulated to protect the beneficial uses of public water supply, protection and propagation of fish, shell fish and wildlife, recreation in and on the water, agricultural, industrial and other purposes including navigation. Section 131.3(e), 40 CFR, defines existing beneficial uses as those uses actually attained after 28 November 1975, whether or not they are included in the water quality standards. Federal Regulation, 40 CFR section 131.10 requires that uses be obtained by implementing effluent limitations, requires that all downstream uses be protected and states that in no case shall a state adopt waste transport or waste assimilation as a beneficial use for any waters of the United States.

a. Receiving Water and Beneficial Uses. Sacramento River

Beneficial uses applicable to **Sacramento River** are shown in Table F-4 (for Discharge Point 001 and 003).

The Basin Plan at **II-2.00** states that the beneficial uses of any specifically identified water body generally apply to its tributary streams. The Basin Plan does not specifically identify beneficial uses for **M&T Canal**, but does identify present and potential uses for **Sacramento River,** to which **M&T Canal,** via

Little Chico Creek, is tributary. Thus, beneficial uses applicable to **Sacramento River** are as follows (for Discharge Point 002):

Table F-4. Basin Plan Beneficial Uses

Discharge Point	Receiving Water Name	Beneficial Use(s)
001 / 002 / 003	**Sacramento River**	Existing: Municipal and domestic supply (MUN); agricultural supply, including irrigation and stock watering (AGR); industrial service supply (IND); hydropower generation (POW); water contact recreation, including canoeing and rafting (REC-1); non-contact water recreation (REC-2); warm freshwater habitat (WARM); cold freshwater habitat (COLD); migration of aquatic organisms, warm and cold (MIGR); spawning, reproduction, and/or early development, warm and cold (SPWN); wildlife habitat (WILD); and navigation (NAV).

b. **Effluent and Ambient Background Data.** The reasonable potential analysis (RPA), as described in section IV.C.3 of this Fact Sheet, was based on data from **2005** through **2009**, which includes effluent and ambient background data submitted in SMRs, and the Report of Waste Discharge (ROWD). The priority pollutant sample collected in 2006 was not utilized, because the reporting limit was approximately 5 times the detection limits in 2005, 2007 and 2008. The detection limits for the metals in the 2006 sample was higher than the water quality objectives, therefore the data is unusable in calculating RPA**.**

c. **Priority Pollutant Metals**

Hardness. While effluent limitations for hardness are not necessary in this Order, hardness is critical to the assessment of the need for, and the development of effluent limitations for certain metals. The *California Toxics Rule* (CTR) and the *National Toxics Rule* contain water quality criteria for seven metals that vary as a function of hardness. The lower the hardness, the lower the water quality criteria. The metals with hardness-dependent criteria include cadmium, copper, chromium III, lead, nickel, silver, and zinc.

This Order has established the criteria for hardness-dependent metals based on the reasonable worst-case ambient hardness as required by the State Water Board's *Implementation of Toxics Standards for Inland Surface Waters, Enclosed Bays, and Estuaries of California* (also referred to as the SIP)[1], the CTR[2] and State Water Board Order No. WQO 2008-0008 (City of Davis). The SIP and the

[1] The SIP does not address how to determine the hardness for application to the equations for the protection of aquatic life when using hardness-dependent metals criteria. It simply states, in Section 1.2, that the criteria shall be properly adjusted for hardness using the hardness of the receiving water.

[2] The CTR requires that, for waters with a hardness of 400 mg/L (as $CaCO_3$), or less, the actual ambient hardness of the surface water must be used. It further requires that the hardness values used must be consistent with the design discharge conditions for design flows and mixing zones.

CTR require the use of "receiving water" or "actual ambient" hardness, respectively, to determine effluent limitations for these metals. (SIP, § 1.2; 40 CFR § 131.38(c)(2), Table 4, note 4.) The CTR does not define whether the term "ambient," as applied in the regulations, necessarily requires the consideration of upstream as opposed to downstream hardness conditions. In some cases, the hardness of effluent discharges changes the hardness of the ambient receiving water. Therefore, where reliable, representative data are available, the hardness value for calculating criteria can be the downstream receiving water hardness, after mixing with the effluent (Order WQO 2008-0008, p. 11). The Regional Water Board thus has considerable discretion in determining ambient hardness (*Id.*, p.10.)

The hardness values must also be protective under all flow conditions (*Id.*, pp. 10-11). As discussed below, scientific literature provides a reliable method for calculating protective hardness-dependent CTR criteria, considering all discharge conditions. This methodology produces criteria that ensure these metals do not cause receiving water toxicity, while avoiding criteria that are unnecessarily stringent.

i. **Reasonable Potential Analysis (RPA).** The SIP in Section 1.3 states, "The RWQCB shall…determine whether a discharge may: (1) cause, (2) have a reasonable potential to cause, or (3) contribute to an excursion above any applicable priority pollutant criterion or objective." Section 1.3 provides a step-by-step procedure for conducting the RPA. The procedure requires the comparison of the Maximum Effluent Concentration (MEC) and Maximum Ambient Background Concentration to the applicable criterion that has been properly adjusted for hardness. Unless otherwise noted, for the hardness-dependent CTR metals criteria the following procedures were followed for properly adjusting the criterion for hardness when conducting the RPA. Based on the RPA analysis, there is reasonable potential for copper to cause, or contribute to an excursion above any applicable priority pollutant criterion or objective.

- For comparing the MEC to the applicable criterion, in accordance with the SIP, CTR, and Order WQO 2008-0008, the reasonable worst-case downstream hardness was used to adjust the criterion. In this evaluation the portion of the receiving water affected by the discharge is analyzed. For hardness-dependent criteria, the hardness of the effluent has an impact on the determination of the applicable criterion in areas in the receiving water affected by the discharge. Therefore, for this situation it is necessary to consider the hardness of the effluent in determining the applicable hardness to adjust the criterion. The procedures for determining the applicable criterion after proper adjustment using the reasonable worst-case downstream hardness is outlined in subsection ii. below.

- For comparing the Maximum Ambient Background Concentration to the applicable criterion, in accordance with the SIP, CTR, and Order WQO 2008-0008, the reasonable worst-case upstream hardness was used to adjust the criterion. In this evaluation the area outside the influence of the discharge is analyzed. For this situation, the discharge does not impact the upstream hardness. Therefore, the effect of the effluent hardness was not included in this evaluation.

a) **Discharge Point No. 001/003 (Sacramento River).** The upstream receiving water hardness in the Sacramento River ranged from 50 mg/L to 57 mg/L, based on 3 samples from 2005 to 2008. Thus, a minimum upstream receiving water hardness of 50 mg/L (as $CaCO_3$) represents the reasonable worst-case upstream hardness and was used to adjust the criterion when comparing the Maximum Background Ambient Concentration to the criterion for the discharge to the Sacramento River at Discharge Point No. 001/003. For comparing the MEC to the applicable criterion, in accordance with the SIP, CTR, and Order WQO 2008-0008, the reasonable worst-case downstream hardness was used to adjust the criterion. The procedures for determining the applicable criterion after proper adjustment using the reasonable worst-case downstream hardness is outlined in subsection ii. below.

ii. **Effluent Concentration Allowance (ECA) Calculations.** A 2006 Study[1] developed procedures for calculating the effluent concentration allowance (ECA)[2] for CTR hardness-dependent metals. The 2006 Study demonstrated that it is necessary to evaluate all discharge conditions (e.g. high and low flow conditions) and the hardness and metals concentrations of the effluent and receiving water when determining the appropriate ECA for these hardness-dependent metals. Simply using the lowest recorded upstream receiving water hardness to calculate the ECA may result in over or under protective WQBELs.

The equation describing the total recoverable regulatory criterion, as established in the CTR, is as follows:

$$\text{CTR Criterion} = \text{WER} \times (e^{m[\ln(H)]+b}) \qquad \text{(Equation 1)}$$

Where:

H = hardness (as $CaCO_3$)
WER = water-effect ratio
m, b = metal- and criterion-specific constants

[1] Emerick, R.W.; Borroum, Y.; & Pedri, J.E., 2006. California and National Toxics Rule Implementation and Development of Protective Hardness Based Metal Effluent Limitations. WEFTEC, Chicago, Ill.
[2] The ECA is defined in Appendix 1 of the SIP (page Appendix 1-2). The ECA is used to calculate WQBELs in accordance with Section 1.4 of the SIP

In accordance with the CTR, the default value for the WER is 1. A WER study must be conducted to use a value other than 1. The constants "m" and "b" are specific to both the metal under consideration, and the type of total recoverable criterion (i.e., acute or chronic). The metal-specific values for these constants are provided in the CTR at paragraph (b)(2), Table 1.

The equation for the ECA is defined in Section 1.4, Step 2, of the SIP and is as follows:

$$ECA = C \quad (\text{when } C \leq B)^{1} \qquad \text{(Equation 2)}$$

Where

C = the priority pollutant criterion/objective, adjusted for hardness (see Equation 1, above)

B = the ambient background concentration

The 2006 Study demonstrated that the relationship between hardness and the calculated criteria is the same for some metals, so the same procedure for calculating the ECA may be used for these metals. The same procedure can be used for chronic cadmium, chromium III, copper, nickel, and zinc. These metals are hereinafter referred to as "Concave Down Metals". "Concave Down" refers to the shape of the curve represented by the relationship between hardness and the CTR criteria in Equation 1. Another similar procedure can be used for determining the ECA for acute cadmium, lead, and acute silver, which are referred to hereafter as "Concave Up Metals", however, based on the RPA analysis, there is no reasonable potential for these "concave down metals" to cause, or contribute to an excursion above any applicable priority pollutant criterion or objective.

ECA for Concave Down Metals – For Concave Down Metals (i.e., chronic cadmium, chromium III, copper, nickel, and zinc) the 2006 Study demonstrates that when the effluent is in compliance with the CTR criteria and the upstream receiving water is in compliance with the CTR criteria, any mixture of the effluent and receiving water will always be in compliance with the CTR criteria. Therefore, based on any observed ambient background hardness, no receiving water assimilative capacity for metals (i.e., ambient background metals concentrations are at their respective CTR criterion) and the minimum effluent hardness, the ECA calculated using Equation 1 with a hardness equivalent to the minimum effluent hardness is protective under all discharge conditions (i.e., high and low dilution conditions and under all mixtures of effluent and receiving water as the effluent mixes with the receiving water). This is applicable whether the effluent hardness is less than or greater than the ambient background receiving water hardness.

[1] The 2006 Study assumes the ambient background metals concentration is equal to the CTR criterion (i.e. C ≤ B)

The effluent hardness ranged from 121 mg/L to 123 mg/L (as CaCO3), based on two samples from 2007 and 2008. The upstream receiving water hardness in the Sacramento River varied from 50 mg/L to 57 mg/L (as CaCO3), based on three samples from2005 through 2008. Using a hardness of 50 mg/L (as CaCO3) to calculate the ECA for all Concave Down Metals will result in WQBELs that are protective under all potential effluent/receiving water mixing scenarios and under all known hardness conditions, as demonstrated in the example using copper for the Sacramento River shown in Table F-5, below. This example assumes the following conservative conditions for the upstream receiving water:

- Upstream receiving water always at the lowest observed upstream receiving water hardness (i.e., 50 mg/L as CaCO3)
- Upstream receiving water copper concentration always at the CTR criteria (i.e., no assimilative capacity).

As demonstrated in Table F-5, using a hardness of 50 mg/L (as CaCO3) to calculate the ECA for Concave Down Metals ensures the discharge is protective under all discharge and mixing conditions. In this example, the effluent is in compliance with the CTR criteria and any mixture of the effluent and receiving water is in compliance with the CTR criteria. An ECA based on a lower hardness (e.g., lowest upstream receiving water hardness) would also be protective, but would result in unreasonably stringent effluent limits considering the known conditions. Therefore, in this Order the ECA for all Concave Down Metals has been calculated using Equation 1 with a hardness of 121 mg/L (as CaCO3).

Table F-5. Copper ECA Evaluation

Minimum Observed Effluent Hardness	**121 mg/L (as $CaCO_3$)**
Minimum Observed Upstream Receiving Water Hardness	**50 mg/L (as $CaCO_3$)**
Maximum Assumed Upstream Receiving Water Copper Concentration	**5.2 µg/L[1]**
Copper $ECA_{chronic}$[2]	**11.0 µg/L**

Effluent Fraction	Mixed Downstream Ambient Concentration		
	Hardness[3] (mg/L) (as $CaCO_3$)	**CTR Criteria[4] (µg/L)**	**Copper[5] (µg/L)**
1%	50.71	5.2	5.2
5%	53.55	5.5	5.5
15%	60.65	6.1	6.0
25%	67.75	6.7	6.6
50%	85.5	8.2	8.1
75%	103.25	9.6	9.5
100%	121	11.0	11.0

1 **Maximum assumed upstream receiving water copper concentration calculated using Equation 1 for chronic criterion at a hardness of 121** mg/L (as $CaCO_3$)**.**

2 **ECA calculated using Equation 1 for chronic criterion at a hardness of 50** mg/L (as $CaCO_3$)**.**

3 **Mixed downstream ambient hardness is the mixture of the receiving water and effluent hardness at the applicable effluent fraction.**

4 **Mixed downstream ambient criteria are the chronic criteria calculated using Equation 1 at the mixed hardness.**

5 **Mixed downstream ambient copper concentration is the mixture of the receiving water and effluent copper concentrations at the applicable effluent fraction.**

d. Assimilative Capacity/Mixing Zone

USEPA established numeric criteria for priority toxic pollutants in the California Toxics Rule (CTR). The State Water Resources Control Board adopted the Policy for Implementation of Toxics Standards for Inland Surface Waters, Enclosed Bays, and Estuaries of California (SIP) to implement the CTR. The Regional Water Board's Basin Plan allows mixing zones provided the Discharger has demonstrated that the mixing zone will not adversely impact beneficial uses. The Basin Plan further requires that in determining the size of a mixing zone, the Regional Water Board will consider the applicable procedures in USEPA's Water Quality Standards Handbook and the Technical Support Document for Water Quality Based Toxics Control (TSD). It is the Regional Water Board's discretion

whether to allow a mixing zone. The SIP, in part, states that mixing zones shall not:

- Compromise the integrity of the entire water body;
- Cause acutely toxic conditions to aquatic life passing through the mixing zone;
- Restrict passage of aquatic life;
- Adversely impact biologically sensitive or critical habitats, including but not limited to, habitat of species listed under Federal or State endangered species laws;
- Produce objectionable color, odor, taste, or turbidity;
- Cause objectionable bottom deposits;
- Cause nuisance;
- Dominate the receiving water body or overlap a mixing zone from different outfalls; and,
- Be allowed at or near any drinking water intake.

USEPA's Water Quality Standards Handbook (WQSH) states that States may, at their discretion, allow mixing zones. The WQSH recommends that mixing zones be defined on a case-by-case basis after it has been determined that the assimilative capacity of the receiving stream can safely accommodate the discharge. This assessment should take into consideration the physical, chemical, and biological characteristics of the discharge and the receiving stream; the life history of and behavior of organisms in the receiving stream; and the desired uses of the waters. Mixing zones should not be allowed where they may endanger critical areas (e.g., drinking water supplies, recreational areas, breeding grounds and areas with sensitive biota). USEPA's TSD states, in part in Section 4.3.1, that mixing zones should not be permitted where they may endanger critical areas.

The Basin Plan, the SIP and USEPA's TSD state that allowance of a mixing zone is discretionary on the part of the Regional Board. Mixing zones will be limited to the amount of assimilative capacity necessary to comply with discharge limitations. There are no water intakes downstream of the discharge point within a distance that could be impacted by the proposed mixing zone.

A mixing model referred to in the Technical support document was consulted by the Discharger's Engineer to verify the mixing regime of the outfall and river. The model is applicable to point discharges where rapid vertical mixing occurs. According to the Technical support document, the model is based on EPA-approved Visual Plumes. The model was used to evaluate the effect on dilution on a range of receiving water conditions, including variations in depth, temperature, salinity, and current speed. This modeling is essentially the same model used in the current order (R5-2004-0073).

The Discharger has conducted a mixing zone study for their discharge and based on the study, a dilution credit of 47 at critical conditions (for acute and chronic criteria) and 88 at the average condition (for human health criteria) has been developed. The Regional Water Board is granting a dilution credit for copper, chlordibromomethane and dichlorobromomethane, that represents the performance of the existing Facility. The dilution for the design dry weather flow (12.0 mgd) is 151:1, 178:1, and 404:1 (acute, chronic, human health). The worst case dilution is assumed to be 48:1 at peak wet weather effluent flow rates of 37.5 mgd. The 37.5 mgd is the maximum flow that the diffuser/piping can discharge at any one time. The mixing zone for these dilution credits (47 for acute and chronic and 88 for human health) is 94 feet wide by 250 feet long, downstream from the diffuser. This leaves a zone of passage in the river with a width of 506 feet at the proposed diffuser location. For discharge to the M&T canal, dilution credits of 5.4 for acute and chronic criteria and 6.7 for human health criteria were used. These dilution credits are calculated on the basis of typical flow in the canal of 100 cubic feet per second (cfs) minimum and an average of 125 cfs, and a maximum plant flow of 12.0 mgd. No dilution is allowed (in the M&T Canal) during the winter when the canal is drained and not in use for irrigation.

This Order requires the Discharger to conduct a mixing zone study to clarify the results of the mixing zone model. Based on the results of the mixing zone study, the permit may be reopened to modify or adjust the dilution credits. The Discharger must also, by a dilution study, show that the minimum dilution at the point of the outfall is 20:1 in a mixing zone that complies with the SIP, the Basin Plan, and the USEPA Technical support document. The existing model indicates that the minimum dilution for the existing diffuser is approximately 48:1**.**

3. Determining the Need for WQBELs

a. The Regional Water Board conducted the RPA in accordance with section 1.3 of the SIP. Although the SIP applies directly to the control of CTR priority pollutants, the State Water Board has held that the Regional Water Board may use the SIP as guidance for water quality-based toxics control.[1] The SIP states in the introduction "*The goal of this Policy is to establish a standardized approach for permitting discharges of toxic pollutants to non-ocean surface waters in a manner that promotes statewide consistency*." Therefore, in this Order the RPA procedures from the SIP were used to evaluate reasonable potential for both CTR and non-CTR constituents based on information submitted as part of the application, in studies, and as directed by monitoring and reporting programs.

b. Constituents with Limited Data. Reasonable potential cannot be determined for the following constituents because effluent data are limited or ambient background concentrations are not available. The Discharger is required to continue to monitor for these constituents in the effluent using analytical methods that provide the best feasible detection limits. When additional data become

[1] See Order WQO 2001-16 (Napa) and Order WQO 2004-0013 (Yuba City).

available, further analysis will be conducted to determine whether to add numeric effluent limitations or to continue monitoring.

i. **Bis (2-ethylhexyl) Phthalate.** The majority of effluent data provided by the Discharger indicates that bis (2-ethylhexyl) phthalate was below analytical detection levels. Also, because bis (2-ethylhexyl) phthalate is a common contaminant of sample containers, sampling apparatus, and analytical equipment, and sources of the detected bis (2-ethylhexyl) phthalate may be from plastics used for sampling or analytical equipment, the Regional Water Board is not establishing effluent limitations for bis (2-ethylhexyl) phthalate at this time. Instead of limitations, additional monitoring has been established for bis (2-ethylhexyl) phthalate; should monitoring results indicate that the discharge has the reasonable potential to cause or contribute to an exceedance of a water quality standard, then this Order may be reopened and modified by adding an appropriate effluent limitation.

ii. **Methylene Chloride.** The majority of effluent data provided by the Discharger indicates that methylene chloride was below or at analytical detection levels. Also, because methylene chloride is a common solvent used by laboratories that examines water samples to aid in the analysis process. Methylene chloride readily evaporate into the air, the laboratory air itself can potentially cross-contaminate other samples awaiting analysis. The Regional Water Board is not establishing effluent limitations for methylene chloride at this time. Instead of limitations, additional monitoring has been established for methylene chloride; should monitoring results indicate that the discharge has the reasonable potential to cause or contribute to an exceedance of a water quality standard, then this Order may be reopened and modified by adding an appropriate effluent limitation

c. **Constituents with No Reasonable Potential.** WQBELs are not included in this Order for constituents that do not demonstrate reasonable potential; however, monitoring for those pollutants is established in this Order as required by the SIP. If the results of effluent monitoring demonstrate reasonable potential, this Order may be reopened and modified by adding an appropriate effluent limitation.

d. **Constituents with Reasonable Potential.** The Regional Water Board finds that the discharge has a reasonable potential to cause or contribute to an in-stream excursion above a water quality standard for **ammonia, chlorodibromomethane and dichlorobromomethane**. WQBELs for these constituents are included in this Order. A summary of the RPA is provided in Attachment G, and a detailed discussion of the RPA for each constituent is provided below.

i. **Ammonia**

(a) **WQO.** USEPA's *Ambient Water Quality Criteria for the Protection of Freshwater Aquatic Life*, for total ammonia, recommends acute (1-hour average; criteria maximum concentration) standards based on pH and

chronic (30-day average, criteria continuous concentration) standards based on pH and temperature. USEPA found that as pH increased, both the acute and chronic toxicity of ammonia increased. Salmonids were more sensitive to acute toxicity effects than other species. However, while the acute toxicity of ammonia was not influenced by temperature, it was found that invertebrates and young fish experienced increasing chronic toxicity effects with increasing temperature. Because the Sacramento River has a beneficial use of cold freshwater habitat and the presence of salmonids and early fish life stages in the Sacramento River is well documented, the recommended criteria for waters where salmonids and early life stages are present were used. USEPA's recommended criteria are show below:

$$CCC_{30-day} = \left(\frac{0.0577}{1+10^{7.688-pH}} + \frac{2.487}{1+10^{pH-7.688}} \right) \times MIN\left(2.85, 1.45 \cdot 10^{0.028(25-T)}\right), \text{ and}$$

$$CMC = \left(\frac{0.275}{1+10^{7.204-pH}} + \frac{39.0}{1+10^{pH-7.204}} \right),$$

where *T* is in degrees Celsius

NAWQC for the protection of freshwater aquatic life for total ammonia, recommends acute (1-hour average; criteria maximum concentration or CMC) standards based on pH and chronic (30-day average; criteria continuous concentration or CCC) standards based on pH and temperature. USEPA also recommends that no 4-day average concentration should exceed 2.5 times the 30-day CCC. USEPA found that as pH increased, both the acute and chronic toxicity of ammonia increased. Salmonids were more sensitive to acute toxicity effects than other species. However, while the acute toxicity of ammonia was not influenced by temperature, it was found that invertebrates and young fish experienced increasing chronic toxicity effects with increasing temperature. Because the **Sacramento River** has a beneficial use of cold freshwater habitat and the presence of salmonids and early fish life stages in the **Sacramento River** is well-documented, the recommended criteria for waters where salmonids and early life stages are present were used

The maximum permitted effluent pH is 9.0. The Basin Plan objective for pH in the receiving stream is the range of 6.5 to 8.5. The maximum observed 30-day average effluent temperature was 86.0 ºF (30 ºC). The maximum observed 30-day R-1 temperature was 63.5 ºF (17.5 ºC) . Using the Basin Plan high pH receiving water value of 8.5 (In accordance with 51 R-1 receiving water monitoring samples submitted by the City, the River pH has not exceeded 8.25) and the worst-case average receiving water temperature values at the edge of the mixing zone (17.5ºC) on a 30-day basis (without dilution credit) the CMC and CCC are 2.139 mg/L and 0.899 mg/l, respectively. The chronic 4 day average criterion is derived by

multiplying the chronic criterion (30 day) for ammonia by 2.5, for a criterion of 2.248 mg/L. The ammonia effluent limitations, with the provision for a dilution credit of 20, are 21.29 mg/L (as N) as the AMEL and 42.71 mg/L as the MDEL. A dilution of 20:1 is approximately ½ of the dilution credit requested by the Discharger. Based on the monitoring results for the past five years, the effluent can meet the ammonia effluent concentrations at ½ of requested dilution credit.

(b) RPA Results. Untreated domestic wastewater contains ammonia. Nitrification is a biological process that converts ammonia to nitrite and nitrite to nitrate. Denitrification is a process that converts nitrate to nitrite or nitric oxide and then to nitrous oxide or nitrogen gas, which is then released to the atmosphere. The Discharger **does** currently use nitrification to remove ammonia from the waste stream. Inadequate or incomplete nitrification may result in the discharge of ammonia to the receiving stream. Ammonia is known to cause toxicity to aquatic organisms in surface waters. Discharges of ammonia would violate the Basin Plan narrative toxicity objective. The maximum effluent concentration (MEC) for ammonia was **16.58** µg/L (January 2008), however, the average monthly ammonia effluent concentration for the time period December 2004 through February 2009 was 0.65 mg/L. Therefore, ammonia in the discharge has a reasonable potential to cause or contribute to an in-stream excursion above the NAWQC.

(c) WQBELs. The Regional Water Board calculates WQBELs in accordance with SIP procedures for non-CTR constituents, and ammonia is a non-CTR constituent. The SIP procedure assumes a 4-day averaging period for calculating the long-term average discharge condition (LTA). However, USEPA recommends modifying the procedure for calculating permit limits for ammonia using a 30-day averaging period for the calculation of the LTA corresponding to the 30-day CCC. Therefore, while the LTAs corresponding to the acute and 4-day chronic criteria were calculated according to SIP procedures, the LTA corresponding to the 30-day CCC was calculated assuming a 30-day averaging period. The lowest LTA representing the acute, 4-day CCC, and 30-day CCC is then selected for deriving the average monthly effluent limitation (AMEL) and the maximum daily effluent limitation (MDEL). The remainder of the WQBEL calculation for ammonia was performed according to the SIP procedures. This Order contains a final average monthly effluent limitation (AMEL) and maximum daily effluent limitation (MDEL) for **ammonia** as shown in Table F-7 of this Fact Sheet, based on the **with the provision for a dilution credit of 20:1**.

(d) Plant Performance and Attainability. Analysis of the effluent data shows that the MEC of **16.58** µg/L is greater than the applicable WQBELs, however the average MEC for the past 4 years is 0.65 mg/L. The Regional Water Board concludes, therefore, that immediate compliance with these effluent limitations is feasible.

ii. Copper

(a) WQO. The CTR includes a criteria for **copper** for the protection of human health for waters from which both water and organisms are consumed.

(b) RPA Results. The maximum effluent concentration (MEC) for **copper** was **37** µg/L while the maximum observed upstream receiving water concentration was **1.7** µg/L. Therefore, **copper** in the discharge has a reasonable potential to cause or contribute to an in-stream excursion above the CTR criterion for the protection of human health

(c) WQBELs. The receiving water contains assimilative capacity for copper, therefore, the following dilution credits were allowed in the development of the WQBELs for copper

Discharge Point D-001 / 003 = 47:1

Discharge Point D-002 (April 15 – December 15) = 5.4:1

Discharge Point D-002 (December 16 – April 14) = no dilution

This Order contains a final average monthly effluent limitation (AMEL) and maximum daily effluent limitation (MDEL) for **copper** , as shown in Table F-10 of this Fact Sheet, based on the CTR criterion for the protection of human health.

(d) Plant Performance and Attainability. Analysis of the effluent data shows that the MEC of **37** µg/L is less than the applicable WQBELs. The Regional Water Board concludes, therefore, that immediate compliance with these effluent limitations is feasible.

iii. Chlorodibromomethane

(a) WQO. The CTR includes criteria for **chlorodibromomethane** for the protection of human health for waters from which both water and organisms are consumed.

(b) RPA Results. The The maximum effluent concentration (MEC) for **chlorodibromomethane** was **9.0** µg/L while the maximum observed upstream receiving water concentration was **0.50** µg/L. Therefore, **chlorodibromomethane** in the discharge has a reasonable potential to cause or contribute to an in-stream excursion above the CTR criterion for the protection of human health.

(c) WQBELs. The receiving water contains assimilative capacity for chlorodibromoemethane, therefore, the following dilution credits were allowed in the development of the WQBELs for copper.

Discharge Point D-001 / 003 = 88:1

Discharge Point D-002 (April 15 – December 15) = 5.4:1

Discharge Point D-002 (December 16 – April 14) = no dilution

This Order contains a final average monthly effluent limitation (AMEL) and maximum daily effluent limitation (MDEL) for **chlorodibromomethane** , as shown in Table F-8 of this Fact Sheet, based on the CTR criterion for the protection of human health.

(d) Plant Performance and Attainability. Analysis of the effluent data shows that the MEC of **9.0** µg/L is less than the applicable WQBELs. The Regional Water Board concludes, therefore, that immediate compliance with these effluent limitations is feasible.

iv. Dichlorobromomethane

(a) WQO. The CTR includes criteria for **dichlorobromomethane** for the protection of human health for waters from which both water and organisms are consumed.

(b) RPA Results. The maximum effluent concentration (MEC) for **dichlorobromomethane** was **33** µg/L while the maximum observed upstream receiving water concentration was **0.5** µg/L. Therefore, **dichlorbromomethane** in the discharge has a reasonable potential to cause or contribute to an in-stream excursion above the CTR criterion for the protection of human health.

(c) WQBELs. The receiving water contains assimilative capacity for dichlorobromomethane, therefore, the following dilution credits were allowed in the development of the WQBELs for copper.

Discharge Point D-001 / 003 = 88:1

Discharge Point D-002 (April 15 – December 15) = 5.4:1

Discharge Point D-002 (December 16 – April 14) = no dilution

This Order contains a final average monthly effluent limitation (AMEL) and maximum daily effluent limitation (MDEL) for **dichlorobromomethane** , as shown in Table F-9 of this Fact Sheet, based on the CTR criterion for the protection of human health.

(d) Plant Performance and Attainability. Analysis of the effluent data shows that the MEC of **33** µg/L is less than the applicable WQBELs. The Regional Water Board concludes, therefore, that immediate compliance with these effluent limitations is feasible.

v. Chlorine Residual

(a) WQO. USEPA developed NAWQC for protection of freshwater aquatic life for chlorine residual. The recommended 4-day average (chronic) and 1-hour average (acute) criteria for chlorine residual are 0.01 mg/L and 0.02 mg/L, respectively. These criteria are protective of the Basin Plan's narrative toxicity objective.

(b) RPA Results. The Discharger uses sodium hypochlorite for disinfection, which is extremely toxic to aquatic organisms. The Discharger uses a sodium bisulfite process to dechlorinate the effluent prior to discharge to **Sacramento River**. Due to the existing chlorine use and the potential for chlorine to be discharged, the discharge has a reasonable potential to cause or contribute to an in-stream excursion above the NAWQC.

(c) WQBELs. The USEPA *Technical Support Document for Water Quality-Based Toxics Control* [EPA/505/2-90-001] contains statistical methods for converting chronic (4-day) and acute (1-hour) aquatic life criteria to average monthly and maximum daily effluent limitations based on the variability of the existing data and the expected frequency of monitoring. However, because chlorine is an acutely toxic constituent that can and will be monitored continuously, an average 1-hour limitation is considered more appropriate than an average daily limitation. This Order contains a 4-day average effluent limitation and 1-hour average effluent limitation for chlorine residual of 0.01 mg/L and 0.02 mg/L, respectively, based on USEPA's NAWQC, which implements the Basin Plan's narrative toxicity objective for protection of aquatic life.

(d) Plant Performance and Attainability. Plant Performance and Attainability. Analysis of the effluent data shows that immediate compliance with these effluent limitations is feasible.

vi. Pathogens

The Regional Water Board, when developing NPDES permits, implements recommendations by DPH for the appropriate disinfection requirements for the protection of MUN, REC-1 and AGR. The disinfection requirements in the proposed Order implement the DPH recommendations and are fully protective of the beneficial uses of the receiving water.

(a) WQO. In 1987, the Department of Health Services (DHS) (now the Department of Public Health, or DPH) issued the "Uniform Guidelines for the Disinfection of Wastewater" (Uniform Guidelines), which included recommendations to the Regional Water Board regarding the appropriate level of disinfection for wastewater discharges to surface waters. In a letter to the Regional Water Board dated 8 April 1999, DPH indicated it would consider wastewater discharged to water bodies with identified beneficial uses of irrigation or contact recreation and where the

wastewater receives dilution of more than 20:1 to be adequately disinfected if the effluent coliform concentration does not exceed 23 MPN/100 mL as a 7-day median and if the effluent coliform concentration does not exceed 240 MPN/100 mL more than once in any 30 day period. In a subsequent letter dated 1 July 2003, DPH states that a *filtered and disinfected effluent should be required in situations where critical beneficial uses (i.e. food crop irrigation or body contact recreation) are made of the receiving waters unless a 20:1 dilution ratio is available. In these circumstances, a secondary, 23 MPN discharge is acceptable.*" DPH considers such discharges to be essentially pathogen-free.

There are no numeric water quality objectives for pathogens applicable to the receiving water for the protection of MUN. The applicable narrative water quality objective that applies to surface waters is the bacteria objective in the Basin Plan, which states, "*In waters designated for contact recreation (REC-1), the fecal coliform concentration based on a minimum of not less than five samples for any 30-day period shall not exceed a geometric mean of 200/100 ml, nor shall more than ten percent of the total number of samples taken during any 30-day period exceed 400/100 ml*

(b) RPA Results. Municipal and domestic supply, agricultural irrigation, and body contact water recreation are beneficial uses of the **Sacramento River**. Based on a review of data submitted by the Discharger, the available dilution is greater than 20:1 (river flow to design effluent flow). Therefore, the DPH requirements are applicable to the discharge.

(c) WQBELs. This Order includes effluent limitations for total coliform organisms of 23 MPN/100 mL as a 7-day median and 500 MPN/100 mL, not to be exceeded more than once in a 30-day period (consistent with current permit). These coliform limits are imposed to protect the beneficial uses of the receiving water, including public health through contact recreation and drinking water pathways.

(d) Plant Performance and Attainability. Analysis of the effluent data shows that the immediate compliance with these effluent limitations is feasible.

vii. pH

(a) WQO. The Basin Plan includes a water quality objective for surface waters (except for Goose Lake) that the *"…pH shall not be depressed below 6.5 nor raised above 8.5. Changes in normal ambient pH levels shall not exceed 0.5 in fresh waters with designated COLD or WARM beneficial uses.*"

(b) RPA Results. The discharge of **secondary treated wastewater** has a reasonable potential to cause or contribute to an excursion above the Basin Plan's numeric objectives for pH.

(c) WQBELs. Effluent limitations for pH of 6.5 as an instantaneous minimum and 8.5 as an instantaneous maximum are included in this Order based on protection of the Basin Plan objectives for pH.

(d) Plant Performance and Attainability. Analysis of the effluent data shows that the immediate compliance with these effluent limitations is feasible.

viii. Salinity

(a) WQO. There are no USEPA water quality criteria for the protection of aquatic organisms for electrical conductivity, total dissolved solids, sulfate, and chloride. The Basin Plan contains a chemical constituent objective that incorporates state MCLs, contains a narrative objective, and contains numeric water quality objectives for electrical conductivity, total dissolved solids, sulfate, and chloride.

Table F-6. Salinity Water Quality Criteria/Objectives

Parameter	Agricultural WQ Goal[1]	Secondary MCL[3]	Effluent Average
EC (µmhos/cm)	Varies[2]	900, 1600, 2200	**664**
TDS (mg/L)	Varies	500, 1000, 1500	**n/a**
Sulfate (mg/L)	Varies	250, 500, 600	**n/a**
Chloride (mg/L)	Varies	250, 500, 600	**n/a**

1 Agricultural water quality goals based on *Water Quality for Agriculture*, Food and Agriculture Organization of the United Nations—Irrigation and Drainage Paper No. 29, Rev. 1 (R.S. Ayers and D.W. Westcot, Rome, 1985)

2 The EC level in irrigation water that harms crop production depends on the crop type, soil type, irrigation methods, rainfall, and other factors. An EC level of 700 umhos/cm is generally considered to present no risk of salinity impacts to crops. However, many crops are grown successfully with higher salinities.

3 The secondary MCLs are stated as a recommended level, upper level, and a short-term maximum level.

(1) Electrical Conductivity. The secondary MCL for EC is 900 µmhos/cm as a recommended level (annual average), 1600 µmhos/cm as an upper level, and 2200 µmhos/cm as a short-term maximum. The agricultural water quality goal, that would apply the narrative chemical constituents objective, is 700 µmhos/cm as a long-term average based on Water Quality for Agriculture, Food and Agriculture Organization of the United Nations—Irrigation and Drainage Paper No. 29, Rev. 1 (R.S. Ayers and D.W. Westcot, Rome, 1985). The 700 µmhos/cm agricultural water quality goal is intended to prevent reduction in crop yield, i.e. a restriction on use of water, for salt-sensitive crops, such as beans, carrots, turnips, and strawberries. These crops are either

currently grown in the area or may be grown in the future. Most other crops can tolerate higher EC concentrations without harm, however, as the salinity of the irrigation water increases, more crops are potentially harmed by the EC, or extra measures must be taken by the farmer to minimize or eliminate any harmful impacts.

(b) RPA Results.

(1) Electrical Conductivity. A review of the Discharger's monitoring reports shows an average effluent EC of **664** µmhos/cm. These levels **do not exceed** the secondary MCL of 900 µmhos/cm or the agricultural water quality goal of 700 µmhos/cm, therefore there is no reasonable potential of exceeding the 700 µmhos/cm, thus there is no effluent limitation for electrical conductivity included in this Order.

(c) WQBELs. Effluent limitations based on the MCL or the Basin Plan would likely require construction and operation of a reverse osmosis treatment plant. The State Water Board, in Water Quality Order 2005-005 (for the City of Manteca), states, "*…the State Board takes official notice [pursuant to Title 23 of California Code of Regulations, Section 648.2] of the fact that operation of a large-scale reverse osmosis treatment plant would result in production of highly saline brine for which an acceptable method of disposal would have to be developed. Consequently, any decision that would require use of reverse osmosis to treat the City's municipal wastewater effluent on a large scale should involve thorough consideration of the expected environmental effects.*" The State Water Board states in that Order, "*Although the ultimate solution to southern Delta salinity problems have not yet been determined, previous actions establish that the State Board intended for permit limitations to play a limited role with respect to achieving compliance with the EC water quality objectives in the southern Delta.*" The State Water Board goes on to say, "*Construction and operation of reverse osmosis facilities to treat discharges…prior to implementation of other measures to reduce the salt load in the southern Delta, would not be a reasonable approach*."

The Regional Water Board, with cooperation of the State Water Board, has begun the process to develop a new policy for the regulation of salinity in the Central Valley. In a statement issued at the 16 March 2006, Regional Water Board meeting, Board Member Dr. Karl Longley recommended that the Regional Water Board continue to exercise its authority to regulate discharges of salt to minimize salinity increases within the Central Valley. Dr. Longley stated, "*The process of developing new salinity control policies does not, therefore, mean that we should stop regulating salt discharges until a salinity Policy is developed. In the meantime, the Board should consider all possible interim approaches to continue controlling and regulating salts in a reasonable manner, and encourage all stakeholder groups that may be affected by the Regional Board's policy to actively participate in policy development.*"

Based on the relatively low reported salinity, the discharge does not have reasonable potential to cause or contribute to an in-stream excursion of water quality objectives for salinity

In order to ensure that the Discharger will continue to control the discharge of salinity, this Order includes a requirement to develop and implement a salinity evaluation and minimization plan. Also water supply monitoring is required to evaluate the relative contribution of salinity from the source water to the effluent.

(d) Plant Performance and Attainability. A review of the Discharger's monitoring reports shows an average effluent EC of **664** µmhos/cm. These levels **do not exceed** the secondary MCL. Analysis of the effluent data shows that the immediate compliance with these effluent limitations is feasible.

4. WQBEL Calculations

a. This Order includes WQBELs for **copper, chlorodibromomethane and dichlorobromomethane**. The general methodology for calculating WQBELs based on the different criteria/objectives is described in subsections IV.C.4.b through e, below. See **Attachment H** for the WQBEL calculations.

b. Effluent Concentration Allowance. For each water quality criterion/objective, the ECA is calculated using the following steady-state mass balance equation from Section 1.4 of the SIP:

$ECA = C + D(C - B)$ *where C>B, and*
$ECA = C$ *where C≤B*

where:
ECA = effluent concentration allowance
D = dilution credit
C = the priority pollutant criterion/objective
B = the ambient background concentration.

According to the SIP, the ambient background concentration (B) in the equation above shall be the observed maximum with the exception that an ECA calculated from a priority pollutant criterion/objective that is intended to protect human health from carcinogenic effects shall use the arithmetic mean concentration of the ambient background samples. For ECAs based on MCLs, which implement the Basin Plan's chemical constituents objective and are applied as annual averages, an arithmetic mean is also used for B due to the long-term basis of the criteria.

Table F-7. WQBEL Calculations for Ammonia at Discharge Point No. D-001/003

	Acute	Chronic (4-day)	Chronic (30-day)
Criteria (mg/L)[1]	2.139	2.248	0.899
Dilution Credit	20	20	20
ECA	42.78	44.95	17.98
ECA Multiplier	0.321	0.527	0.78
LTA[2]	13.73	23.69	14.02
AMEL Multiplier (95th%)	1.55	[3]	[3]
AMEL (mg/L)	**21.29**	[3]	[3]
MDEL Multiplier (99th%)	3.11	[3]	[3]
MDEL (mg/L)	**42.71**	[3]	[3]

[1] USEPA Ambient Water Quality Criteria.
[2] LTA developed based on Acute and Chronic ECA Multipliers calculated at 99th percentile level per sections 5.4.1 and 5.5.4 of TSD.
[3] Limitations based on acute LTA ($LTA_{acute} < LTA_{chronic(4\text{-}day)}$ and $LTA_{acute} < LTA_{chronic(30\text{-}day)}$).

Table F-8. WQBEL Calculations for Chlorodibromomethane at Discharge Point No. D-001/002/003

	Human Health-D-001/003	Human Health-D-002 (April 15 – Dec 15)	Human Health-D-002 (Dec 16 - April 14)
Criteria (µg/L)	0.41	0.41	0.41
Dilution Credit	88	6.7	0
ECA	29.45	1.683	0.41
AMEL (µg/L)[1]	**29.45**	**1.68**	**0.41**
MDEL/AMEL Multiplier[2]	1.65	1.65	1.65
MDEL (µg/L)	**48.46**	**2.77**	**0.68**

[1] AMEL = ECA per section 1.4.B, Step 6 of SIP

[2] Assumes sampling frequency n<=4. Uses MDEL/AMEL multiplier from Table 2 of SIP.

Table F-9. WQBEL Calculations for Dichlorobromomethane at Discharge Point No. D-001/002/003

	Human Health-D-001/003	Human Health-D-002 (April 15 – Dec 15)	Human Health-D-002 (Dec 16 - April 14)
Criteria (µg/L)	0.56	0.56	0.56
Dilution Credit	88	6.7	0
ECA	41.04	1.83	0.56
AMEL (µg/L)[1]	**41.04**	**1.83**	**0.56**
MDEL/AMEL Multiplier[2]	1.91	1.91	1.91
MDEL (µg/L)	**78.28**	**3.50**	**1.07**

1 AMEL = ECA per section 1.4.B, Step 6 of SIP

2 Assumes sampling frequency n<=4. Uses MDEL/AMEL multiplier from Table 2 of SIP.

Table F-10. WQBEL Calculations for Copper at Discharge Point No. D-001/003

	Acute	Chronic
Criteria, total recoverable (µg/L) (1)	11	16.8
Dilution Credit	47	47
ECA, total recoverable (2)	726.5	448.1
ECA Multiplier (3)	0.284	0.484
LTA	206.477	217.09
AMEL Multiplier (95th%) (4)(5)	1.64	(7)
AMEL (µg/L)	**339.07**[8]	(7)
MDEL Multiplier (99th%) (6)	3.52	(7)
MDEL (µg/L)	**726.50**[8]	(7)

1 CTR aquatic life criteria, based on a hardness of 89 mg/L as $CaCO_3$. The criteria is based on application of a site-specific metals translator.
2 ECA calculated per section 1.4.B, Step 2 of SIP.
3 Acute and Chronic ECA Multiplier calculated at 99th percentile per section 1.4.B, Step 3 of SIP or per sections 5.4.1 and 5.5.4 of the TSD.
4 Assumes sampling frequency n<=4.
5 The probability basis for AMEL is 95th percentile per section 1.4.B, Step 5 of SIP or section 5.5.4 of the TSD.
6 The probability basis for MDEL is 99th percentile per section 1.4.B, Step 5 of SIP or section 5.5.4 of the TSD.
7 Limitations based on acute LTA (Acute LTA < Chronic LTA).
8 Existing effluent limits are 81.00 and 160.00 ug/L (AMEL and MDEL)

c. **Basin Plan Objectives and MCLs.** For WQBELs based on site-specific numeric Basin Plan objectives or MCLs, the effluent limitations are applied directly as the ECA as either an MDEL, AMEL, or average annual effluent limitations, depending on the averaging period of the objective.

d. **Aquatic Toxicity Criteria.** WQBELs based on acute and chronic aquatic toxicity criteria are calculated in accordance with Section 1.4 of the SIP. The ECAs are converted to equivalent long-term averages (i.e. LTAacute and LTAchronic) using statistical multipliers and the lowest LTA is used to calculate the AMEL and MDEL using additional statistical multipliers.

e. **Human Health Criteria.** WQBELs based on human health criteria, are also calculated in accordance with Section 1.4 of the SIP. The ECAs are set equal to the AMEL and a statistical multiplier was used to calculate the MDEL.

$$AMEL = mult_{AMEL}\left[\min\left(\overbrace{M_A ECA_{acute}}^{LTA_{acute}}, M_C ECA_{chronic}\right)\right]$$

$$MDEL = mult_{MDEL}\left[\min\left(M_A ECA_{acute}, \underbrace{M_C ECA_{chronic}}_{LTA_{chronic}}\right)\right]$$

$$MDEL_{HH} = \left(\frac{mult_{MDEL}}{mult_{AMEL}}\right) AMEL_{HH}$$

where:
multAMEL = statistical multiplier converting minimum LTA to AMEL
multMDEL = statistical multiplier converting minimum LTA to MDEL
MA = statistical multiplier converting acute ECA to LTA_{acute}
MC = statistical multiplier converting chronic ECA to $LTA_{chronic}$

See Section IV.D of this Fact Sheet for a summary of Water Quality Based Effluent Limitations contained in this Order.

5. Whole Effluent Toxicity (WET)

For compliance with the Basin Plan's narrative toxicity objective, this Order requires the Discharger to conduct whole effluent toxicity testing for acute and chronic toxicity, as specified in the Monitoring and Reporting Program (Attachment E section V.). This Order also contains effluent limitations for acute toxicity and chronic toxicity. The Order also requires the Discharger to implement best management practices to investigate the causes of, and identify corrective actions to reduce or eliminate effluent toxicity.

a. **Acute Aquatic Toxicity.** The Basin Plan contains a narrative toxicity objective that states, "*All waters shall be maintained free of toxic substances in concentrations that produce detrimental physiological responses in human, plant, animal, or aquatic life.*" (Basin Plan at page **III-8.00**) The Basin Plan also states that, *"…effluent limits based upon acute biotoxicity tests of effluents will be prescribed where appropriate…*". USEPA Region 9 provided guidance for the development of acute toxicity effluent limitations in the absence of numeric water quality objectives for toxicity in its document titled "Guidance for NPDES Permit Issuance", dated February 1994. In section B.2. "Toxicity Requirements" (pgs. 14-15) it states that, "*In the absence of specific numeric water quality objectives for acute and chronic toxicity, the narrative criterion 'no toxics in toxic amounts' applies. Achievement of the narrative criterion, as applied herein, means that ambient waters shall not demonstrate for acute toxicity: 1) less than 90% survival, 50% of the time, based on the monthly median, or 2) less than 70% survival, 10% of the time, based on any monthly median. For chronic toxicity, ambient waters shall not demonstrate a test result of greater than 1 TUc.*" Accordingly, effluent limitations for acute toxicity have been included in this Order as follows:

Acute Toxicity. Survival of aquatic organisms in 96-hour bioassays of undiluted waste shall be no less than:

Minimum for any one bioassay-- ---------- 70%
-
Median for any three or more consecutive bioassays --------- 90%

b. **Chronic Aquatic Toxicity.** The Basin Plan contains a narrative toxicity objective that states, "*All waters shall be maintained free of toxic substances in concentrations that produce detrimental physiological responses in human, plant, animal, or aquatic life.*" (Basin Plan at page **III-8.00**). **Based on chronic WET testing performed by the Discharger from December 2004 through March 2009, the discharge does not have reasonable potential to cause or contribute to an in-stream excursion above of the Basin Plan's narrative toxicity objective.**

The Monitoring and Reporting Program of this Order requires **annually** chronic WET monitoring for demonstration of compliance with the narrative toxicity objective. In addition to WET monitoring, the Special Provision in section VI.C.2.a. of the Order requires the Discharger to submit to the Regional Water Board an Initial Investigative TRE Workplan for approval by the Executive Officer, to ensure the Discharger has a plan to immediately move forward with the initial tiers of a TRE, in the event effluent toxicity is encountered in the future. The provision also includes a numeric toxicity monitoring trigger, requirements for accelerated monitoring, and requirements for TRE initiation if a pattern of toxicity is demonstrated.

Numeric chronic WET effluent limitations have not been included in this Order. The SIP contains implementation gaps regarding the appropriate form and

implementation of chronic toxicity limits. This has resulted in the petitioning of a NPDES permit in the Los Angeles Region[1] that contained numeric chronic toxicity effluent limitations. To address the petition, the State Water Board adopted WQO 2003-012 directing its staff to revise the toxicity control provisions in the SIP. The State Water Board states the following in WQO 2003-012, "*In reviewing this petition and receiving comments from numerous interested persons on the propriety of including numeric effluent limitations for chronic toxicity in NPDES permits for publicly-owned treatment works that discharge to inland waters, we have determined that this issue should be considered in a regulatory setting, in order to allow for full public discussion and deliberation. We intend to modify the SIP to specifically address the issue. We anticipate that review will occur within the next year. We therefore decline to make a determination here regarding the propriety of the final numeric effluent limitations for chronic toxicity contained in these permits."* The process to revise the SIP is currently underway. Proposed changes include clarifying the appropriate form of effluent toxicity limits in NPDES permits and general expansion and standardization of toxicity control implementation related to the NPDES permitting process. Since the toxicity control provisions in the SIP are under revision it is infeasible to develop numeric effluent limitations for chronic toxicity. Therefore, this Order requires that the Discharger meet best management practices for compliance with the Basin Plan's narrative toxicity objective, as allowed under 40 CFR 122.44(k).

To ensure compliance with the Basin Plan's narrative toxicity objective, the Discharger is required to conduct chronic WET testing, as specified in the Monitoring and Reporting Program (Attachment E section V.). Furthermore, the Special Provision contained at VI.C.2.a. of this Order requires the Discharger to investigate the causes of, and identify and implement corrective actions to reduce or eliminate effluent toxicity. If the discharge demonstrates a pattern of toxicity exceeding the numeric toxicity monitoring trigger, the Discharger is required to initiate a Toxicity Reduction Evaluation (TRE) in accordance with an approved TRE workplan. The numeric toxicity monitoring trigger is not an effluent limitation; it is the toxicity threshold at which the Discharger is required to perform accelerated chronic toxicity monitoring, as well as, the threshold to initiate a TRE if a pattern of effluent toxicity has been demonstrated.

D. Final Effluent Limitations

The following table summarizes the Final Effluent Limitations for Discharge Points D-001, D-002, and D-003:

[1] In the Matter of the Review of Own Motion of Waste Discharge Requirements Order Nos. R4-2002-0121 [NPDES No. CA0054011] and R4-2002-0123 [NPDES NO. CA0055119] and Time Schedule Order Nos. R4-2002-0122 and R4-2002-0124 for Los Coyotes and Long Beach Wastewater Reclamation Plants Issued by the California Regional Water Quality Control Board, Los Angeles Region SWRCB/OCC FILES A-1496 AND 1496(a)

Table F-11. Summary of Final Effluent Limitations Discharge Point No. D-001/002/003

Parameter	Units	Effluent Limitations					Basis[1]
		Average Monthly	Average Weekly	Maximum Daily	Instantaneous Minimum	Instantaneous Maximum	
BOD[1]	mg/L	30	45	90			Tech.
	lbs/day[2]	3002	4504	9007			Tech.
Total Suspended Solids	mg/L	30	45	90			Tech.
	lbs/day[2]	3002	4504	9007			Tech.
Total Residual Chlorine	mg/L	--	0.01[3]	0.02[4]	--	--	USEPA
Total Coliform Organisms	MPN/100 mL	23		500			BP
pH	pH units				6.0	9.0	Tech.
Ammonia	mg/L	21.29		42.71			BP
Average Dry Weather Flow (July – September)	mgd	**12.0**	--	--	--	--	Design
Discharge D-001 and D-003							
Total Recoverable Copper	**ug/L**	81.00		160.00			CTR
Chlorodibromomethane	ug/L	29.45		48.46			CTR
Dichlorobromomethane	ug/L	41.04		78.28			CTR
Discharge D-002 (April 15 through December 15)							
Total Recoverable Copper	ug/L	13.00		26.00			CTR
Chlorodibromomethane	ug/L	1.68		2.77			CTR
Dichlorobromomethane	ug/L	1.83		3.50			CTR
Discharge D-002 (December 16 through April 14)							
Total Recoverable Copper	ug/L	3.30		6.70			CTR
Chlorodibromomethane	ug/L	0.41		0.68			CTR
Dichlorobromomethane	ug/L	0.56		1.07			CTR

[1] 5-day, 20°C Biochemical Oxygen Demand (BOD)
[2] Based upon a design dry weather treatment capacity of 12.0 mgd, applicable from July through September
[3] 4-day average
[4] 1-hour average

Percent Removal. The average monthly percent removal of BOD 5-day 20°C and total suspended solids shall not be less than 85 percent

Acute Whole Effluent Toxicity. Survival of aquatic organisms in 96-hour bioassays of undiluted waste shall be no less than:

i. 70%, minimum for any one bioassay; and

ii. 90%, median for any three consecutive bioassays

1. Mass-based Effluent Limitations

40 CFR 122.45(f)(1) requires effluent limitations be expressed in terms of mass, with some exceptions, and 40 CFR 122.45(f)(2) allows pollutants that are limited in terms of mass to additionally be limited in terms of other units of measurement. This Order includes effluent limitations expressed in terms of mass and concentration. In addition, pursuant to the exceptions to mass limitations provided in 40 CFR 122.45(f)(1), some effluent limitations are not expressed in terms of mass, such as pH and temperature, and when the applicable standards are expressed in terms of concentration (e.g., CTR criteria and MCLs) and mass limitations are not necessary to protect the beneficial uses of the receiving water.

Mass-based effluent limitations were calculated based upon the permitted average daily discharge flow allowed in Section IV.A.1.a. of this Order.

2. Averaging Periods for Effluent Limitations

40 CFR 122.45 (d) requires average weekly and average monthly discharge limitations for publicly owned treatment works (POTWs) unless impracticable. However, for toxic pollutants and pollutant parameters in water quality permitting, USEPA recommends the use of a maximum daily effluent limitation in lieu of average weekly effluent limitations for two reasons. "*First, the basis for the 7-day average for POTWs derives from the secondary treatment requirements. This basis is not related to the need for assuring achievement of water quality standards. Second, a 7-day average, which could comprise up to seven or more daily samples, could average out peak toxic concentrations and therefore the discharge's potential for causing acute toxic effects would be missed.*" (TSD, pg. 96) This Order utilizes maximum daily effluent limitations in lieu of average weekly effluent limitations for **copper, chlorodibromomethane and dichlorobromomethane, ammonia, total coliform and total residual chlorine** as recommended by the TSD for the achievement of water quality standards and for the protection of the beneficial uses of the receiving stream.

3. Satisfaction of Anti-Backsliding Requirements

All effluent limitations in this Order are at least as stringent or more stringent as the effluent limitations in the existing Order. Following is a comparison of existing to proposed effluent limitations for CTR constituents:

Constituent	Existing Limits (AMEL / MDEL) (ug/L)	Proposed Limits (AMEL / MDEL) (ug/L)
Total Recoverable Copper	81 / 160	81.00 / 160.00
Total Recoverable Lead	27 / 53	Not Required
Total Recoverable Zinc	1,700 / 3,300	Not Required
Chlorodibromomethane	41 / 83	29.45 / 48.46
Dichlorobromomethane	60 / 120	41.04 / 78.28

Effluent limits are not required for Total Recoverable Lead and Zinc. Based on CFR Section 122.44(l)(2)(i)(B)(1) and the new information gathered over the term of Order No. R5-2004-0073, this Order does not carry forward the effluent limitations for Total Recoverable Lead and Total Recoverable Zinc, because the discharge does not demonstrate reasonable potential to cause or contribute to an in-stream exceedance of the applicable water quality criteria/objective for these constituents. This relaxation of effluent limitations is consistent with the anti-backsliding provisions, and the antidegradation provisions of 40 CFR 131.12 and State Water Resources Control Board Resolution 68-16. Any impact on existing water quality will be insignificant.

4. Satisfaction of Antidegradation Policy

The permitted discharge is consistent with the antidegradation provisions of 40 CFR 131.12 and State Water Board Resolution No. 68-16. This Order provides for an increase in the volume and mass of pollutants discharged. The increase will not have significant impacts on aquatic life, which is the beneficial use most likely affected by the pollutants discharged (**copper, chlorodibromomethane and dichlorobromomethane**). The increase will not cause a violation of water quality objectives. The increase in the discharge allows wastewater utility service necessary to accommodate housing and economic expansion in the area, and is considered to be a benefit to the people of the State. Compliance with these requirements will result in the use of best practicable treatment or control of the discharge.

E. Interim Effluent Limitations – Not Applicable

F. Land Discharge Specifications – Not Applicable

G. Reclamation Specifications – Not Applicable

V. RATIONALE FOR RECEIVING WATER LIMITATIONS

Basin Plan water quality objectives to protect the beneficial uses of surface water and groundwater include numeric objectives and narrative objectives, including objectives for chemical constituents, toxicity, and tastes and odors. The toxicity objective requires that surface water and groundwater be maintained free of toxic substances in concentrations that produce detrimental physiological responses in humans, plants, animals, or aquatic life. The chemical constituent objective requires that surface water and groundwater shall not contain chemical constituents in concentrations that adversely affect any beneficial use or that exceed the maximum contaminant levels (MCLs) in Title 22, CCR. The tastes and odors objective states that surface water and groundwater shall not contain taste- or odor-producing substances in concentrations that cause nuisance or adversely affect beneficial uses. The Basin Plan requires the application of the most stringent objective necessary to ensure that surface water and groundwater do not contain chemical constituents, toxic substances, radionuclides, or taste and odor producing substances in concentrations that adversely affect domestic drinking water supply, agricultural supply, or any other beneficial use.

A. Surface Water

1. CWA section 303(a-c), requires states to adopt water quality standards, including criteria where they are necessary to protect beneficial uses. The Regional Water Board adopted water quality criteria as water quality objectives in the Basin Plan. The Basin Plan states that "[t]*he numerical and narrative water quality objectives define the least stringent standards that the Regional Water Board will apply to regional waters in order to protect the beneficial uses.*" The Basin Plan includes numeric and narrative water quality objectives for various beneficial uses and water bodies. This Order contains receiving surface water limitations based on the Basin Plan numerical and narrative water quality objectives for **bacteria, biostimulatory substances, color, chemical constituents, dissolved oxygen, floating material, oil and grease, pH, pesticides, radioactivity, suspended sediment, settleable substances, suspended material, tastes and odors, temperature, toxicity, and turbidity**..

a. **Bacteria.** The Basin Plan includes a water quality objective that "*[I]n water designated for contact recreation (REC-1), the fecal coliform concentration based on a minimum of not less than five samples for any 30-day period shall not exceed a geometric mean of 200/100 ml, nor shall more than ten percent of the total number of samples taken during any 30-day period exceed 400/100 ml*." Numeric Receiving Water Limitations for bacteria are included in this Order and are based on the Basin Plan objective.

b. **Biostimulatory Substances**. The Basin Plan includes a water quality objective that "*[W]ater shall not contain biostimulatory substances which promote aquatic growths in concentrations that cause nuisance or adversely affect beneficial uses."* Receiving Water Limitations for biostimulatory substances are included in this Order and are based on the Basin Plan objective.

c. **Color**. The Basin Plan includes a water quality objective that "*[W]ater shall be free of discoloration that causes nuisance or adversely affects beneficial uses."* Receiving Water Limitations for color are included in this Order and are based on the Basin Plan objective.

d. **Chemical Constituents**. The Basin Plan includes a water quality objective that *"[W]aters shall not contain chemical constituents in concentrations that adversely affect beneficial uses."* Receiving Water Limitations for chemical constituents are included in this Order and are based on the Basin Plan objective.

e. **Dissolved Oxygen.** The Sacramento River has been designated as having the beneficial use of cold freshwater aquatic habitat (COLD). For water bodies designated as having COLD as a beneficial use, the Basin Plan includes a water quality objective of maintaining a minimum of 7.0 mg/L of dissolved oxygen. Since the beneficial use of COLD does apply to the Sacramento River, a receiving water limitation of 7.0 mg/L for dissolved oxygen was included in this Order.

   For surface water bodies outside of the Delta, the Basin Plan includes the water quality objective that "…*the monthly median of the mean daily dissolved oxygen (DO) concentration shall not fall below 85 percent of saturation in the main water mass, and the 95 percentile concentration shall not fall below 75 percent of saturation.*" This objective was included as a receiving water limitation in this Order.

f. **Floating Material**. The Basin Plan includes a water quality objective that *"[W]ater shall not contain floating material in amounts that cause nuisance or adversely affect beneficial uses."* Receiving Water Limitations for floating material are included in this Order and are based on the Basin Plan objective.

g. **Oil and Grease**. The Basin Plan includes a water quality objective that *"[W]aters shall not contain oils, greases, waxes, or other materials in concentrations that cause nuisance, result in a visible film or coating on the surface of the water or on objects in the water, or otherwise adversely affect beneficial uses."* Receiving Water Limitations for oil and grease are included in this Order and are based on the Basin Plan objective.

h. **pH.** The Basin Plan includes water quality objective that *"[T]he pH shall not be depressed below 6.5 nor raised above 8.5. Changes in normal ambient pH levels shall not exceed 0.5 in fresh waters with designated COLD or WARM beneficial uses.*" This Order includes receiving water limitations for both pH range and pH change.

The Basin Plan allows an appropriate averaging period for pH change in the receiving stream. Since there is no technical information available that indicates that aquatic organisms are adversely affected by shifts in pH within the 6.5 to 8.5 range, an averaging period is considered appropriate and a monthly averaging period for determining compliance with the 0.5 receiving water pH limitation is included in this Order.

i. **Pesticides**. The Basin Plan includes a water quality objective for pesticides beginning on page III-6.00. Receiving Water Limitations for pesticides are included in this Order and are based on the Basin Plan objective.

j. **Radioactivity**. The Basin Plan includes a water quality objective that *"[R]adionuclides shall not be present in concentrations that are harmful to human, plant, animal or aquatic life nor that result in the accumulation of radionuclides in the food web to an extent that presents a hazard to human, plant, animal or aquatic life."* The Basin Plan states further that *"[A]t a minimum, waters designated for use as domestic or municipal supply (MUN) shall not contain concentrations of radionuclides in excess of the maximum contaminant levels (MCLs) specified in Table 4 (MCL Radioactivity) of Section 64443 of Title 22 of the California Code of Regulations…"* Receiving Water Limitations for radioactivity are included in this Order and are based on the Basin Plan objective.

k. **Sediment.** The Basin Plan includes a water quality objective that *"[T]he suspended sediment load and suspended sediment discharge rate of surface waters shall not be altered in such a manner as to cause nuisance or adversely affect beneficial uses"* Receiving Water Limitations for suspended sediments are included in this Order and are based on the Basin Plan objective.

l. **Settleable Material.** The Basin Plan includes a water quality objective that *"[W]aters shall not contain substances in concentrations that result in the deposition of material that causes nuisance or adversely affects beneficial uses."* Receiving Water Limitations for settleable material are included in this Order and are based on the Basin Plan objective.

m. **Suspended Material.** The Basin Plan includes a water quality objective that *"[W]aters shall not contain suspended material in concentrations that cause nuisance or adversely affect beneficial uses."* Receiving Water Limitations for suspended material are included in this Order and are based on the Basin Plan objective.

n. **Taste and Odors**. The Basin Plan includes a water quality objective that *"[W]ater shall not contain taste- or odor-producing substances in concentrations that impart undesirable tastes or odors to domestic or municipal water supplies or to fish flesh or other edible products of aquatic origin, or that cause nuisance, or otherwise adversely affect beneficial uses."* Receiving Water Limitations for

taste- or odor-producing substances are included in this Order and are based on the Basin Plan objective.

o. **Temperature.** The Sacramento River has the beneficial uses of both **COLD** and WARM. The Basin Plan includes the objective that "[a]*t no time or place shall the temperature of COLD or WARM intrastate waters be increased more than 5ºF above natural receiving water temperature*." This Order includes a receiving water limitation based on this objective

p. **Toxicity**. The Basin Plan includes a water quality objective that *"[A]ll waters shall be maintained free of toxic substances in concentrations that produce detrimental physiological responses in human, plant, animal, or aquatic life."* Receiving Water Limitations for toxicity are included in this Order and are based on the Basin Plan objective.

q. **Turbidity.** The Basin Plan includes a water quality objective that "*[I]ncreases in turbidity attributable to controllable water quality factors shall not exceed the following limits:*

- *Where natural turbidity is less than 1 Nephelometric Turbidity Units (NTUs), controllable factors shall not cause downstream turbidity to exceed 2 NTUs.*
- *Where natural turbidity is between 1 and 5 NTUs, increases shall not exceed 1 NTU.*
- *Where natural turbidity is between 5 and 50 NTUs, increases shall not exceed 20 percent.*
- *Where natural turbidity is between 50 and 100 NTUs, increases shall not exceed 10 NTUs.*
- *Where natural turbidity is greater than 100 NTUs, increases shall not exceed 10 percent*."

A numeric Receiving Surface Water Limitation for turbidity is included in this Order and is based on the Basin Plan objective for turbidity.

B. Groundwater – Not Applicable

VI. RATIONALE FOR MONITORING AND REPORTING REQUIREMENTS

40 CFR 122.48 requires that all NPDES permits specify requirements for recording and reporting monitoring results. Water Code sections 13267 and 13383 authorizes the Regional Water Board to require technical and monitoring reports. The Monitoring and Reporting Program (Attachment E) of this Order, establishes monitoring and reporting requirements to implement federal and state requirements. The following provides the

rationale for the monitoring and reporting requirements contained in the Monitoring and Reporting Program for the Facility.

A. Influent Monitoring

1. Influent monitoring is required to collect data on the characteristics of the wastewater and to assess compliance with effluent limitations (e.g., BOD_5 and TSS reduction requirements). The monitoring frequencies have been retained from Order No. **R5-2004-0073**.

2. As described Section IV.C.3 above for salinity, monitoring for salinity (EC) in the influent will be required quarterly in conjunction with effluent and water supply monitoring as a means to provide data to evaluate BPTC for discharges from the Facility.

B. Effluent Monitoring

1. Pursuant to the requirements of 40 CFR 122.44(i)(2) effluent monitoring is required for all constituents with effluent limitations. Effluent monitoring is necessary to assess compliance with effluent limitations, assess the effectiveness of the treatment process, and to assess the impacts of the discharge on the receiving stream.

2. Effluent monitoring frequencies and sample types have been retained from Order No. **R5-2004-0073** to determine compliance with effluent limitations for these parameters.

3. The SIP states that if "…*all reported detection limits of the pollutant in the effluent are greater than or equal to the C [water quality criterion or objective] value, the RWQCB [Regional Water Board] shall establish interim requirements…that require additional monitoring for the pollutant*…." All reported detection limits for **Bis (2-ethylhexyl) Phthalate and Methylene Chloride** are greater than or equal to corresponding applicable water quality criteria or objectives. Monitoring for these constituents has been included in this Order in accordance with the SIP.

C. Whole Effluent Toxicity Testing Requirements

1. **Acute Toxicity. Quarterly** 96-hour bioassay testing is required to demonstrate compliance with the effluent limitation for acute toxicity.

2. **Chronic Toxicity. Annually** chronic whole effluent toxicity testing is required in order to demonstrate compliance with the Basin Plan's narrative toxicity objective.

D. Receiving Water Monitoring

1. Surface Water

i. Receiving water monitoring is necessary to assess compliance with receiving water limitations and to assess the impacts of the discharge on the receiving stream.

2. Groundwater – Not Applicable

E. Other Monitoring Requirements

1. Biosolids Monitoring

Biosolids monitoring is required to ensure compliance with the biosolids disposal requirements contained in the Special Provision contained in section VI.C.6.a. of this Order. Biosolids disposal requirements are imposed pursuant to 40 CFR Part 503 to protect public health and prevent groundwater degradation.

2. Water Supply Monitoring

Water supply monitoring is required to evaluate the source of constituents in the wastewater.

3. Industrial Pretreatment Program Monitoring

Industrial Pretreatment Program monitoring is required to evaluate the industrial source of constituents in the wastewater

VII. RATIONALE FOR PROVISIONS

A. Standard Provisions

Standard Provisions, which apply to all NPDES permits in accordance with 40 CFR 122.41, and additional conditions applicable to specified categories of permits in accordance with 40 CFR 122.42, are provided in Attachment D. The discharger must comply with all standard provisions and with those additional conditions that are applicable under 40 CFR 122.42.

40 CFR 122.41(a)(1) and (b) through (n) establish conditions that apply to all State-issued NPDES permits. These conditions must be incorporated into the permits either expressly or by reference. If incorporated by reference, a specific citation to the regulations must be included in the Order. 40 CFR 123.25(a)(12) allows the state to omit or modify conditions to impose more stringent requirements. In accordance with 40 CFR 123.25, this Order omits federal conditions that address enforcement authority specified in 40 CFR 122.41(j)(5) and (k)(2) because the enforcement authority under the CWC is more stringent. In lieu of these conditions, this Order incorporates by reference CWC section 13387(e).

B. Special Provisions

1. Reopener Provisions

a. **Mercury.** This provision allows the Regional Water Board to reopen this Order in the event mercury is found to be causing toxicity based on acute or chronic toxicity test results, or if a TMDL program is adopted. In addition, this Order may be reopened if the Regional Water Board determines that a mercury offset program is feasible for dischargers subject to NPDES permits.

b. **Pollution Prevention.** This Order requires the Discharger prepare pollution prevention plans following CWC section **13263.3(d)(3) copper, chlorodibromomethane and dichlorobromomethane**. This reopener provision allows the Regional Water Board to reopen this Order for addition and/or modification of effluent limitations and requirements for these constituents based on a review of the pollution prevention plans.

c. **Whole Effluent Toxicity.** This Order requires the Discharger to investigate the causes of, and identify corrective actions to reduce or eliminate effluent toxicity through a Toxicity Reduction Evaluation (TRE). This Order may be reopened to include a numeric chronic toxicity limitation, a new acute toxicity limitation, and/or a limitation for a specific toxicant identified in the TRE. Additionally, if a numeric chronic toxicity water quality objective is adopted by the State Water Board, this Order may be reopened to include a numeric chronic toxicity limitation based on that objective.

d. **Water Effects Ratio (WER) and Metal Translators.** A default WER of 1.0 has been used in this Order for calculating CTR criteria for applicable priority pollutant inorganic constituents. In addition, default dissolved-to-total metal translators have been used to convert water quality objectives from dissolved to total recoverable when developing effluent limitations for **copper**. If the Discharger performs studies to determine site-specific WERs and/or site-specific dissolved-to-total metal translators, this Order may be reopened to modify the effluent limitations for the applicable inorganic constituents.

e. **Dilution Study**. The discharger is required to perform an effluent dilution study within two years of installation of an effluent diffuser. The permit may be reopened at that time if the results of the dilution study are substantially different from the results used to establish an acute toxicity mixing zone for this Order.

f. **Constituent Study.** There are indications that the discharge may contain constituents that have a reasonable potential to cause or contribute to an exceedance of water quality objectives. This Order requires the Discharger to complete a study of these constituents' potential effect in the receiving water. This reopener provision allows the Regional Water Board to reopen this Order for addition of effluent limitations and requirements for these constituents if after review of the study results it is determined that the discharge has reasonable potential to cause or contribute to an exceedance of a water quality objective.

g. **Technical Studies.** The Discharger may perform technical studies in order to demonstrate and justify a change or modification of effluent limitations. This Order may be reopened for the addition and/or modification of effluent limitations and requirements.

2. **Special Studies and Additional Monitoring Requirements**

h. **Chronic Whole Effluent Toxicity Requirements.** The Basin Plan contains a narrative toxicity objective that states, "*All waters shall be maintained free of toxic substances in concentrations that produce detrimental physiological responses in human, plant, animal, or aquatic life.*" (Basin Plan at page **III-8.00**. **Based on whole effluent chronic toxicity testing performed by the Discharger from December 2004 through May 2009, the discharge does not have reasonable potential to cause or contribute to an in-stream excursion above of the Basin Plan's narrative toxicity objective.**

The Monitoring and Reporting Program of this Order requires chronic WET monitoring for demonstration of compliance with the narrative toxicity objective. In addition to WET monitoring, this provision requires the Discharger to submit to the Regional Water Board an Initial Investigative TRE Workplan for approval by the Executive Officer, to ensure the Discharger has a plan to immediately move forward with the initial tiers of a TRE, in the event effluent toxicity is encountered in the future. The provision also includes a numeric toxicity monitoring trigger, requirements for accelerated monitoring, and requirements for TRE initiation if a pattern of toxicity is demonstrated.

Monitoring Trigger. A numeric toxicity monitoring trigger of **> 10** TUc (where TUc = 100/NOEC) is applied in the provision, because this Order does allow dilution for the chronic condition. Minimum dilution credit to be applied is 47 parts of receiving water to 1 part effluent resulting in a theoretical allowance TUc of 47. The discharge showed no chronic toxicity at 100% effluent during the past permitted cycle. Therefore, based on best professional judgment, a cap of 10 to 1 dilution has been applied, and a monitoring trigger of greater than 10 TUc has been applied..

Accelerated Monitoring. The provision requires accelerated WET testing when a regular WET test result exceeds the monitoring trigger. The purpose of accelerated monitoring is to determine, in an expedient manner, whether there is a pattern of toxicity before requiring the implementation of a TRE. Due to possible seasonality of the toxicity, the accelerated monitoring should be performed in a timely manner, preferably taking no more than 2 to 3 months to complete.

The provision requires accelerated monitoring consisting of four chronic toxicity tests in a six-week period (i.e., one test every two weeks) using the species that exhibited toxicity. Guidance regarding accelerated monitoring and TRE initiation is provided in the *Technical Support Document for Water Quality-based Toxics Control,* EPA/505/2-90-001, March 1991 (TSD). The TSD at page 118 states,

"*EPA recommends if toxicity is repeatedly or periodically present at levels above effluent limits more than 20 percent of the time, a TRE should be required.*" Therefore, four accelerated monitoring tests are required in this provision. If no toxicity is demonstrated in the four accelerated tests, then it demonstrates that toxicity is not present at levels above the monitoring trigger more than 20 percent of the time (only 1 of 5 tests are toxic, including the initial test). However, notwithstanding the accelerated monitoring results, if there is adequate evidence of a pattern of effluent toxicity (i.e. toxicity present exceeding the monitoring trigger more than 20 percent of the time), the Executive Officer may require that the Discharger initiate a TRE.

See the WET Accelerated Monitoring Flow Chart (Figure F-1), below, for further clarification of the accelerated monitoring requirements and for the decision points for determining the need for TRE initiation.

TRE Guidance. The Discharger is required to prepare a TRE Workplan in accordance with USEPA guidance. Numerous guidance documents are available, as identified below:

- Toxicity Reduction Evaluation Guidance for Municipal Wastewater Treatment Plants, EPA/833-B-99/002, August 1999.
- Generalized Methodology for Conducting Industrial Toxicity Reduction Evaluations (TREs), EPA/600/2-88/070, April 1989.
- Methods for Aquatic Toxicity Identification Evaluations: Phase I Toxicity Characterization Procedures, Second Edition, EPA 600/6-91/003, February 1991.
- Toxicity Identification Evaluation: Characterization of Chronically Toxic Effluents, Phase I, EPA/600/6-91/005F, May 1992.
- Methods for Aquatic Toxicity Identification Evaluations: Phase II Toxicity Identification Procedures for Samples Exhibiting Acute and Chronic Toxicity, Second Edition, EPA/600/R-92/080, September 1993.
- Methods for Aquatic Toxicity Identification Evaluations: Phase III Toxicity Confirmation Procedures for Samples Exhibiting Acute and Chronic Toxicity, Second Edition, EPA 600/R-92/081, September 1993.
- Methods for Measuring the Acute Toxicity of Effluents and Receiving Waters to Freshwater and Marine Organisms, Fifth Edition, EPA-821-R-02-012, October 2002.
- Short-term Methods for Estimating the Chronic Toxicity of Effluents and Receiving Waters to Freshwater Organisms, Fourth Edition, EPA-821-R-02-013, October 2002.
- Technical Support Document for Water Quality-based Toxics Control, EPA/505/2-90-001, March 1991.

Figure F-1
WET Accelerated Monitoring Flow Chart

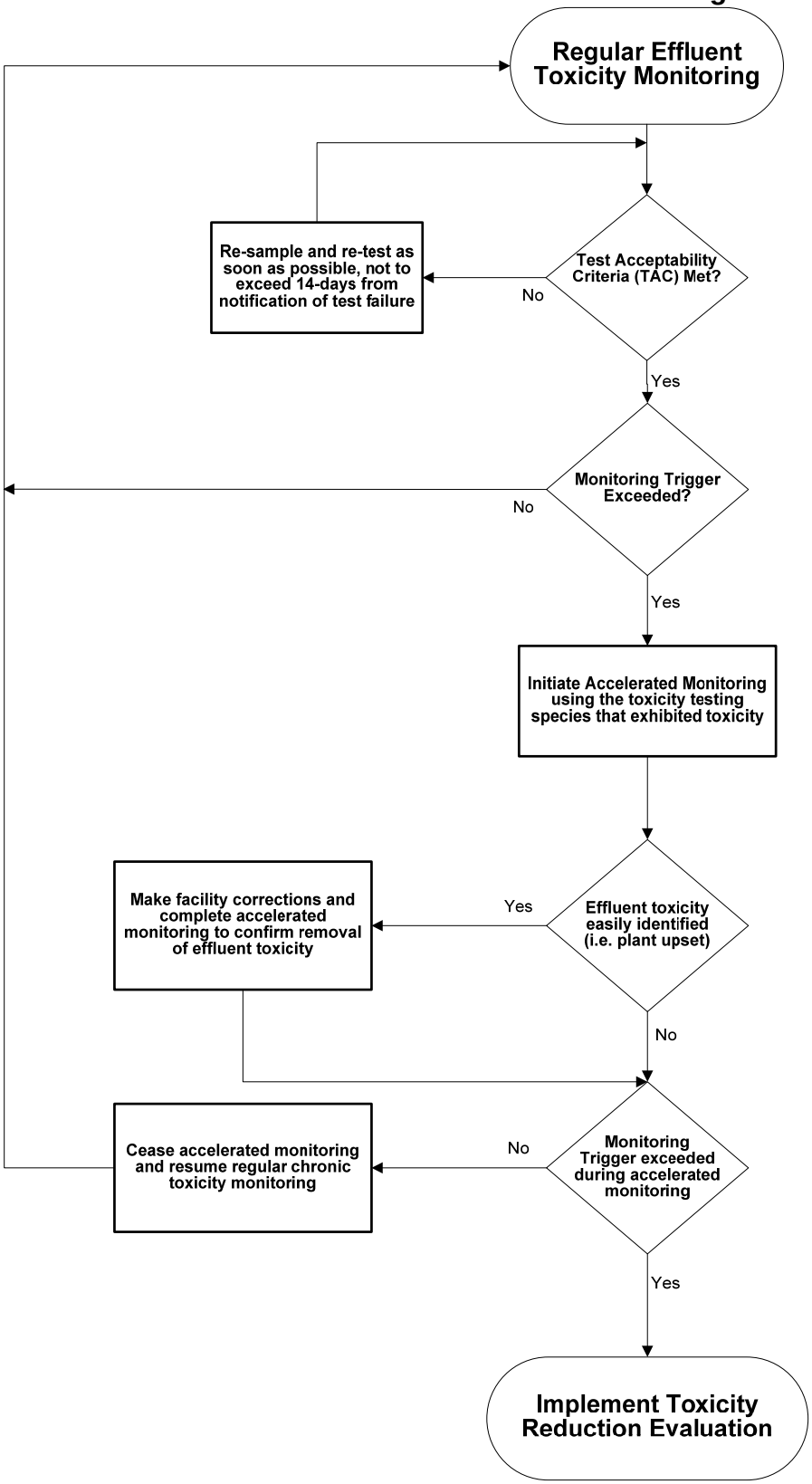

i. **Constituent Study.** There are indications that the discharge may contain constituents that have a reasonable potential to cause or contribute to an exceedance of water quality objectives: **copper, chlorodibromomethane and dichlorobromomethane** This Order requires the Discharger to complete a study of these constituents' potential effect in the receiving water. If after a review of the study results it is determined that the discharge has reasonable potential to cause or contribute to an exceedance of a water quality objective this Order may be reopened and effluent limitations added for the subject constituents.

Table F-12. Constituent Study

Task	Compliance Date
1 - Submit workplan and Time Schedule	Within 6 months of the effective date of Order
2 - Begin Study	Within 3 months of Regional Board approval of Workplan and Time Schedule
3 - Complete Study	As established by Task 1
4 - Submit Study Report	60 days following completion of Task 3 (no greater than 2 years after the effective date of this Order)

j. **Groundwater Monitoring – Not Applicable**

k. **Mixing Zone and Dilution Study.** The mixing zone and dilution study is required to determine the actual mixing and dilution that is achievable in the receiving water from the new diffuser

Table F-13 Mixing Zone and Dilution Study

Task	Compliance Date
1 -Submit technical report: work plan and schedule for mixing zone and dilution study	**Within 6 months** following Order adoption
2 -Commence mixing zone and dilution study	**30 days** following Executive Officer approval of Task 1.
3 -Complete mixing zone and dilution study	As established by Task 1 and/or 2 years following Task 2, whichever is sooner
4 -Submit technical report: mixing zone and dilution study	**60 days** following completion of Task 3.
5 -Submit annual report describing the overall status of the mixing zone and dilution study	To be submitted in accordance with the MRP (Attachment E, Section X.D.1.)

3. **Best Management Practices and Pollution Prevention**

a. **CWC Section 13263.3(d)(2) Pollution Prevention Plans.** A pollution prevention plan for **copper, chlorodibromomethane and dichlorobromomethane** is required in this Order per CWC section 13263.3(d)(1)(C). The pollution prevention plans required in section VI.C.3. of this Order, shall, at a minimum,

meet the requirements outlined in CWC section 13263.3(d)(2). The minimum requirements for the pollution prevention plans include the following:

i. An estimate of all of the sources of a pollutant contributing, or potentially contributing, to the loadings of a pollutant in the treatment plant influent.

ii. An analysis of the methods that could be used to prevent the discharge of the pollutants into the Facility, including application of local limits to industrial or commercial dischargers regarding pollution prevention techniques, public education and outreach, or other innovative and alternative approaches to reduce discharges of the pollutant to the Facility. The analysis also shall identify sources, or potential sources, not within the ability or authority of the Discharger to control, such as pollutants in the potable water supply, airborne pollutants, pharmaceuticals, or pesticides, and estimate the magnitude of those sources, to the extent feasible.

iii. An estimate of load reductions that may be attained through the methods identified in subparagraph ii.

iv. A plan for monitoring the results of the pollution prevention program.

v. A description of the tasks, cost, and time required to investigate and implement various elements in the pollution prevention plan.

vi. A statement of the Discharger's pollution prevention goals and strategies, including priorities for short-term and long-term action, and a description of the Discharger's intended pollution prevention activities for the immediate future.

vii. A description of the Discharger's existing pollution prevention programs.

viii. An analysis, to the extent feasible, of any adverse environmental impacts, including cross-media impacts or substitute chemicals that may result from the implementation of the pollution prevention program.

viii. An analysis, to the extent feasible, of the costs and benefits that may be incurred to implement the pollution prevention program.

Table F-14 Pollution Prevention Plans

Task	Compliance Date
1 - Submit Workplan and Time Schedule	Within 6 months of the effective date of Order
2 - Begin Study	Within 3 months of Regional Board approval of Workplan and Time Schedule
3 - Complete Study	As established by Task 1
4 - Submit Summary Report	60 days following completion of Task 3 (no greater than 2 years after the effective date of this Order)

b. Salinity Reduction Goal. The Discharger shall provide annual reports demonstrating reasonable progress in the reduction of salinity in its discharge to the **Sacramento River**. Based on effluent data for this Facility, the Regional Water Board finds that an increment of 500 µmhos/cm over the electrical conductivity (EC) of the municipal water supply is a reasonable goal that the Facility shall strive to achieve over the term of this Order.

c. Salinity Evaluation and Minimization Plan. An Evaluation and Minimization Plan for salinity is required in this Order to ensure adequate measures are developed and implemented by the Discharger to reduce the discharge of salinity to the Sacramento River.

Table F-15 Salinity Evaluation and Minimization Study

Task	Compliance Date
1 - Submit Work plan and Time Schedule	Within 6 months of the effective date of the Order
2 - Begin Study	Within 3 months of Regional Board approval of Workplan and Time Schedule
3 - Complete Study	As established by Task 1
4 - Submit Summary Report	60 days following completion of Task 3 (no greater than 2 years after the effective date of this Order)

4. Construction, Operation, and Maintenance Specifications

a. **Storage Pond Operating Requirements.**

i. The storage ponds shall be designed, constructed, operated, and maintained to prevent inundation or washout due to floods with a 25-year return frequency.

ii. Public contact with wastewater shall be precluded through such means as fences, signs, and other acceptable alternatives.

iii. Ponds shall be managed to prevent breeding of mosquitoes. In particular,

a) An erosion control program should assure that small coves and irregularities are not created around the perimeter of the water surface.
b) Weeds shall be minimized.
c) Dead algae, vegetation, and debris shall not accumulate on the water surface.

iv. Freeboard shall never be less than one foot (measured vertically to the lowest point of overflow.

5. Special Provisions for Municipal Facilities (POTWs Only)

a. Pretreatment Requirements.

i. The federal CWA section 307(b), and federal regulations, 40 CFR Part 403, require publicly owned treatment works to develop an acceptable industrial pretreatment program. A pretreatment program is required to prevent the introduction of pollutants, which will interfere with treatment plant operations or sludge disposal, and prevent pass through of pollutants that exceed water quality objectives, standards or permit limitations. Pretreatment requirements are imposed pursuant to 40 CFR Part 403.

ii. The Discharger shall implement and enforce its approved pretreatment program and is an enforceable condition of this Order. If the Discharger fails to perform the pretreatment functions, the Regional Water Board, the State Water Board or USEPA may take enforcement actions against the Discharger as authorized by the CWA.

b. The State Water Board issued General Waste Discharge Requirements for Sanitary Sewer Systems, Water Quality Order No. 2006-0003-DWQ (General Order) on 2 May 2006. The General Order requires public agencies that own or operate sanitary sewer systems with greater than one mile of pipes or sewer lines to enroll for coverage under the General Order. The General Order requires agencies to develop sanitary sewer management plans (SSMPs) and report all sanitary sewer overflows (SSOs), among other requirements and prohibitions.

Furthermore, the General Order contains requirements for operation and maintenance of collection systems and for reporting and mitigating sanitary sewer overflows. Inasmuch that the Discharger's collection system is part of the system that is subject to this Order, certain standard provisions are applicable as specified in Provisions, section VI.C.5. For instance, the 24-hour reporting requirements in this Order are not included in the General Order. The Discharger must comply with both the General Order and this Order. The Discharger and public agencies that are discharging wastewater into the facility were required to obtain enrollment for regulation under the General Order by 1 December 2006.

6. Other Special Provisions

a. Ownership Change. To maintain the accountability of the operation of the Facility, the Discharger is required to notify the succeeding owner or operator of the existence of this Order by letter if, and when, there is any change in control or ownership of land or waste discharge facilities presently owned or controlled by the Discharger.

b. Technical Reports. All technical reports required herein that involve planning, investigation, evaluation, or design, or other work requiring interpretation and proper application of engineering or geologic sciences, shall be prepared by or under the direction of persons registered to practice in California pursuant to California Business and Professions Code, Sections 6735, 7835, and 7835.1. To demonstrate compliance with Title 16, CCR, Sections 415 and 3065, all technical reports must contain a statement of the qualifications of the responsible registered professional(s). As required by these laws, completed technical reports must bear the signature(s) and seal(s) of the registered professional(s) in a manner such that all work can be clearly attributed to the professional responsible for the work.

c. In the event the Discharger does not comply or will be unable to comply for any reason, with any prohibition or limitation contained in this Order, this Order requires the Discharger to notify the Regional Water Board by telephone (530) 224-4845 (or to the Regional Water Board staff engineer assigned to the facility) within 24 hours of having knowledge of such noncompliance, and shall confirm this notification in writing within five days, unless the Regional Water Board waives confirmation. The written notification shall include the information required by Federal Standard Provision [40 CFR §122.41(l)(6)(i)].

d. Prior to making any change in the discharge point, place of use, or purpose of use of the wastewater, the Discharger must obtain approval of, or clearance from the State Water Resources Control Board (Division of Water Rights).

In the event of any change in control or ownership of land or waste discharge facilities presently owned or controlled by the Discharger, the Discharger shall notify the succeeding owner or operator of the existence of this Order by letter, a copy of which shall be immediately forwarded to this office.

To assume operation under this Order, the succeeding owner or operator must apply in writing to the Executive Officer requesting transfer of the Order. The request must contain the requesting entity's full legal name, the State of incorporation if a corporation, address and telephone number of the persons responsible for contact with the Regional Water Board and a statement. The statement shall comply with the signatory paragraph of Federal Standard Provision V.B.5 and state that the new owner or operator assumes full responsibility for compliance with this Order. Failure to submit the request shall be considered a discharge without requirements, a violation of the California

Water Code. Transfer shall be approved or disapproved in writing by the Executive Officer.

7. Compliance Schedules – Not Applicable

VIII. PUBLIC PARTICIPATION

The Regional Water Board is considering the issuance of WDRs that will serve as an NPDES permit for the Facility. As a step in the WDR adoption process, the Regional Water Board staff has developed tentative WDRs. The Regional Water Board encourages public participation in the WDR adoption process.

A. Notification of Interested Parties

The Regional Water Board has notified the Discharger and interested agencies and persons of its intent to prescribe waste discharge requirements for the discharge and has provided them with an opportunity to submit their written comments and recommendations. Notification was provided through physical posting (posting at city offices, county courthouse or city hall) and internet posting**.**

B. Written Comments

The staff determinations are tentative. Interested persons are invited to submit written comments concerning these tentative WDRs. Comments must be submitted either in person or by mail to the Executive Office at the Regional Water Board at the address above on the cover page of this Order.

To be fully responded to by staff and considered by the Regional Water Board, written comments must be received at the Regional Water Board offices by noon on **4 January 2010**.

C. Public Hearing

The Regional Water Board will hold a public hearing on the tentative WDRs during its regular Board meeting on the following date and time and at the following location:

Date:	**26, 27, 28 January 2010**
Time:	8:30 a.m.
Location:	Regional Water Quality Control Board, Central Valley Region 11020 Sun Center Dr., Suite #200 Rancho Cordova, CA 95670

Interested persons are invited to attend. At the public hearing, the Regional Water Board will hear testimony, if any, pertinent to the discharge, WDRs, and permit. Oral testimony will be heard; however, for accuracy of the record, important testimony should be in writing.

Please be aware that dates and venues may change. Our Web address is www.waterboards.ca.gov/centralvalley where you can access the current agenda for changes in dates and locations.

D. Waste Discharge Requirements Petitions

Any aggrieved person may petition the State Water Board to review the decision of the Regional Water Board regarding the final WDRs. The petition must be submitted within 30 days of the Regional Water Board's action to the following address:

State Water Resources Control Board
Office of Chief Counsel
P.O. Box 100, 1001 I Street
Sacramento, CA 95812-0100

E. Information and Copying

The Report of Waste Discharge, related documents, tentative effluent limitations and special provisions, comments received, and other information are on file and may be inspected at the address above at any time between 8:30 a.m. and 4:45 p.m., Monday through Friday. Copying of documents may be arranged through the Regional Water Board by calling (530) 224-4845.

F. Register of Interested Persons

Any person interested in being placed on the mailing list for information regarding the WDRs and NPDES permit should contact the Regional Water Board, reference this Facility, and provide a name, address, and phone number.

G. Additional Information

Requests for additional information or questions regarding this order should be directed to **Greg Cash** at (530) 224-3208.

ATTACHMENT G – SUMMARY OF REASONABLE POTENTIAL ANALYSIS

Constituent	Units	MEC	B	C	CMC	CCC	Water & Org	Org. Only	Basin Plan	MCL	Reasonable Potential
Antimony, Total Recoverable	µg/L	0.3	<0.10	6.0	--	--	14	4,300	--	6	No
Chromium III, Total Recoverable	µg/L	3.0	2.9	117.32	984.3	117.3	--	--	--	--	No
Copper, Total Recoverable	µg/L	37	1.7	11.0	11.0	16.8	1300	--	11.0		Yes
Lead, Total Recoverable	µg/L	3.5	<0.10	3.7	94.9	3.7	--	--	--	15	No
Nickel, Total Recoverable	µg/L	2.0	1.3	61.3	551.3	61.3	610	4,600	--	100	No
Silver, Total Recoverable	µg/L	0.14	<0.10	4.2	4.2	--	--	--	11.76	--	No
Zinc, Total Recoverable	µg/L	120	<5.0	140.8	140.8	140.8	--	--	--	--	No
Cyanide	µg/L	3	<0.01	5.20	22.0	5.20	700	220,000	10	200	No
Chlorodibromomethane	µg/L	8.9	<0.1	0.41	--	--	0.41	34	--	--	Yes
Chloroform	µg/L	54	0.2	80	--	--	--	--	--	80	No
Dichlorobromomethane	µg/L	33	<0.08	0.56	--	--	0.56	46	--	--	Yes
Methyl Chloride	µg/L	0.2	0.09	--	--	--	--	--	--	--	No
Tetrachloroethylene	µg/L	0.1	<0.10	0.8	--	--	0.8	8.85	--	5	No
Toluene	µg/L	0.2	<0.10	150	--	--	6,800	200,000	--	150	No
Bis (2-Ethylhexyl) Phthalate	µg/L	2	<1.00	1.8	--	--	1.8	5.9	--	--	No[1]
Diethyl Phthalate	µg/L	0.9	<1.00	23,000	--	--	23,000	120,000	--	--	No
Di-n-Butyl Phthalate	µg/L	1	0.9	2,700	--	--	2,700	12,000	--	--	No
Di-n-Octyl Phthalate	µg/L	0.6	<0.80	--	--	--	--	--	--	--	No

General Note: All inorganic concentrations are given as a total recoverable.
MEC = Maximum Effluent Concentration
B = Maximum Receiving Water Concentration or lowest detection level, if non-detect
C = Criterion used for Reasonable Potential Analysis
CMC = Criterion Maximum Concentration (CTR or NTR)
CCC = Criterion Continuous Concentration (CTR or NTR)
Water & Org = Human Health Criterion for Consumption of Water & Organisms (CTR or NTR)
Org. Only = Human Health Criterion for Consumption of Organisms Only (CTR or NTR)
Basin Plan = Numeric Site-specific Basin Plan Water Quality Objective
MCL = Drinking Water Standards Maximum Contaminant Level
NA = Not Available
ND = Non-detect

Footnotes:

(1) Bis (2-ethylhexyl) phthalate is a common contaminant of sample containers, sampling apparatus, and analytical equipment, and sources of the detected bis (2-ethylhexyl) phthalate may be from plastics used for sampling or analytical equipment. Additional monitoring is required for this constituent.

ATTACHMENT H – CALCULATION OF WQBELS

		Most Stringent Criteria			Dilution Factors			HH Calculations			Aquatic Life Calculations									Final Effluent Limitations	
Parameter	Units	HH	CMC	CCC	HH	CMC	CCC	ECA_{HH}= $AMEL_{HH}$	AMEL/MDEL $Multiplier_{HH}$	MDEL $_{HH}$	ECA MULTIPLIER $_{ACUTE}$	LTA_{ACUTE}	ECA MULTIPLIER $_{CHRONIC}$	LTA $_{CHRONIC}$	LOWEST LTA	AMEL MULTIPLIER $_{95}$	$AMEL_{AL}$	MDEL MULTIPLIER $_{99}$	$MDEL_{AL}$	LOWEST AMEL	LOWEST MDEL
Copper, total recoverable	ug/L	1300	16.8	11.0	47	47	47	- -	2.14	--	0.284	206.48	0.484	217.09	206.48	1.64	339.07	3.52	726.50	**81.00**[1]	**160.00**[1]
Chlorodibro moethane	ug/L	0.41	0.41	0.41	88	88	88	29.45	1.65	48.46	- -	- -	- -	- -	- -	- -	- -	- -	- -	**29.45**	**48.46**
Dichlorobro momethane	ug/L	0.56	0.56	0.56	88	88	88	41.04	1.91	78.28	- -	- -	- -	- -	- -	- -	- -	- -	- -	**41.04**	**78.28**

1. Existing Effluent Limits in Order No. R5-2004-0073.

ATTACHMENT I – EFFLUENT AND RECEIVING WATER CHARACTERIZATION STUDY

I. Background. Sections 2.4.1 through 2.4.4 of the SIP provide minimum standards for analyses and reporting. (Copies of the SIP may be obtained from the State Water Resources Control Board, or downloaded from http://www.waterboards.ca.gov/iswp/index.html). To implement the SIP, effluent and receiving water data are needed for all priority pollutants. Effluent and receiving water pH and hardness are required to evaluate the toxicity of certain priority pollutants (such as heavy metals) where the toxicity of the constituents varies with pH and/or hardness. Section 3 of the SIP prescribes mandatory monitoring of dioxin congeners. In addition to specific requirements of the SIP, the Regional Water Board is requiring the following monitoring:

A. Drinking water constituents. Constituents for which drinking water Maximum Contaminant Levels (MCLs) have been prescribed in the California Code of Regulation are included in the *Water Quality Control Plan, Fourth Edition, for the Sacramento and San Joaquin River Basins* (Basin Plan). The Basin Plan defines virtually all surface waters within the Central Valley Region as having existing or potential beneficial uses for municipal and domestic supply. The Basin Plan further requires that, at a minimum, water designated for use as domestic or municipal supply shall not contain concentrations of chemical constituents in excess of the MCLs contained in the California Code of Regulations.

B. Effluent and receiving water temperature. This is both a concern for application of certain temperature-sensitive constituents, such as fluoride, and for compliance with the Basin Plan's thermal discharge requirements.

C. Effluent and receiving water hardness and pH. These are necessary because several of the CTR constituents are hardness and pH dependent.

D. Dioxin and furan sampling. Section 3 of the SIP has specific requirements for the collection of samples for analysis of dioxin and furan congeners, which are detailed in Attachment J. Pursuant to Section 13267 of the California Water Code, this Order includes a requirement for the Discharger to submit monitoring data for the effluent and receiving water as described in Attachment J.

II. Monitoring Requirements.

A. Annual Monitoring. Annual priority pollutant samples shall be collected from the effluent and upstream receiving water (EFF-001 and RSW-001) and analyzed for the constituents listed in Table I-1. Annual monitoring shall be conducted and the results of such monitoring be submitted to the Regional Water Board. Each individual monitoring event shall provide representative sample results for the effluent and upstream receiving water.

B. Concurrent Sampling. Effluent and receiving water sampling shall be performed at approximately the same time, on the same date.

C. Sample type. All effluent samples shall be taken as 24-hour flow proportioned composite samples. All receiving water samples shall be taken as grab samples.

Table I-1. Priority Pollutants

CTR #	Constituent	CAS Number	Controlling Water Quality Criterion for Surface Waters		Criterion Quantitation Limit ug/L or noted	Suggested Test Methods
			Basis	Criterion Concentration ug/L or noted[1]		
VOLATILE ORGANICS						
28	1,1-Dichloroethane	75343	Primary MCL	5	0.5	EPA 8260B
30	1,1-Dichloroethene	75354	National Toxics Rule	0.057	0.5	EPA 8260B
41	1,1,1-Trichloroethane	71556	Primary MCL	200	0.5	EPA 8260B
42	1,1,2-Trichloroethane	79005	National Toxics Rule	0.6	0.5	EPA 8260B
37	1,1,2,2-Tetrachloroethane	79345	National Toxics Rule	0.17	0.5	EPA 8260B
75	1,2-Dichlorobenzene	95501	Taste & Odor	10	0.5	EPA 8260B
29	1,2-Dichloroethane	107062	National Toxics Rule	0.38	0.5	EPA 8260B
	cis-1,2-Dichloroethene	156592	Primary MCL	6	0.5	EPA 8260B
31	1,2-Dichloropropane	78875	Calif. Toxics Rule	0.52	0.5	EPA 8260B
101	1,2,4-Trichlorobenzene	120821	Public Health Goal	5	0.5	EPA 8260B
76	1,3-Dichlorobenzene	541731	Taste & Odor	10	0.5	EPA 8260B
32	1,3-Dichloropropene	542756	Primary MCL	0.5	0.5	EPA 8260B
77	1,4-Dichlorobenzene	106467	Primary MCL	5	0.5	EPA 8260B
17	Acrolein	107028	Aquatic Toxicity	21	2	EPA 8260B
18	Acrylonitrile	107131	National Toxics Rule	0.059	2	EPA 8260B
19	Benzene	71432	Primary MCL	1	0.5	EPA 8260B
20	Bromoform	75252	Calif. Toxics Rule	4.3	0.5	EPA 8260B
34	Bromomethane	74839	Calif. Toxics Rule	48	1	EPA 8260B
21	Carbon tetrachloride	56235	National Toxics Rule	0.25	0.5	EPA 8260B
22	Chlorobenzene (mono chlorobenzene)	108907	Taste & Odor	50	0.5	EPA 8260B
24	Chloroethane	75003	Taste & Odor	16	0.5	EPA 8260B
25	2- Chloroethyl vinyl ether	110758	Aquatic Toxicity	122 (3)	1	EPA 8260B
26	Chloroform	67663	OEHHA Cancer Risk	1.1	0.5	EPA 8260B
35	Chloromethane	74873	USEPA Health Advisory	3	0.5	EPA 8260B
23	Chlorodibromomethane	124481	Calif. Toxics Rule	0.41	0.5	EPA 8260B
27	Dichlorobromomethane	75274	Calif. Toxics Rule	0.56	0.5	EPA 8260B
36	Dichloromethane	75092	Calif. Toxics Rule	4.7	0.5	EPA 8260B
33	Ethylbenzene	100414	Taste & Odor	29	0.5	EPA 8260B
88	Hexachlorobenzene	118741	Calif. Toxics Rule	0.00075	1	EPA 8260B
89	Hexachlorobutadiene	87683	National Toxics Rule	0.44	1	EPA 8260B
91	Hexachloroethane	67721	National Toxics Rule	1.9	1	EPA 8260B

CTR #	Constituent	CAS Number	Controlling Water Quality Criterion for Surface Waters		Criterion Quantitation Limit ug/L or noted	Suggested Test Methods
			Basis	Criterion Concentration ug/L or noted[1]		
94	Naphthalene	91203	USEPA IRIS	14	10	EPA 8260B
38	Tetrachloroethene	127184	National Toxics Rule	0.8	0.5	EPA 8260B
39	Toluene	108883	Taste & Odor	42	0.5	EPA 8260B
40	trans-1,2-Dichloroethylene	156605	Primary MCL	10	0.5	EPA 8260B
43	Trichloroethene	79016	National Toxics Rule	2.7	0.5	EPA 8260B
44	Vinyl chloride	75014	Primary MCL	0.5	0.5	EPA 8260B
	Methyl-tert-butyl ether (MTBE)	1634044	Secondary MCL	5	0.5	EPA 8260B
	Trichlorofluoromethane	75694	Primary MCL	150	5	EPA 8260B
	1,1,2-Trichloro-1,2,2-Trifluoroethane	76131	Primary MCL	1200	10	EPA 8260B
	Styrene	100425	Taste & Odor	11	0.5	EPA 8260B
	Xylenes	1330207	Taste & Odor	17	0.5	EPA 8260B
SEMI-VOLATILE ORGANICS						
60	1,2-Benzanthracene	56553	Calif. Toxics Rule	0.0044	5	EPA 8270C
85	1,2-Diphenylhydrazine	122667	National Toxics Rule	0.04	1	EPA 8270C
45	2-Chlorophenol	95578	Taste and Odor	0.1	2	EPA 8270C
46	2,4-Dichlorophenol	120832	Taste and Odor	0.3	1	EPA 8270C
47	2,4-Dimethylphenol	105679	Calif. Toxics Rule	540	2	EPA 8270C
49	2,4-Dinitrophenol	51285	National Toxics Rule	70	5	EPA 8270C
82	2,4-Dinitrotoluene	121142	National Toxics Rule	0.11	5	EPA 8270C
55	2,4,6-Trichlorophenol	88062	Taste and Odor	2	10	EPA 8270C
83	2,6-Dinitrotoluene	606202	USEPA IRIS	0.05	5	EPA 8270C
50	2-Nitrophenol	25154557	Aquatic Toxicity	150 (5)	10	EPA 8270C
71	2-Chloronaphthalene	91587	Aquatic Toxicity	1600 (6)	10	EPA 8270C
78	3,3'-Dichlorobenzidine	91941	National Toxics Rule	0.04	5	EPA 8270C
62	3,4-Benzofluoranthene	205992	Calif. Toxics Rule	0.0044	10	EPA 8270C
52	4-Chloro-3-methylphenol	59507	Aquatic Toxicity	30	5	EPA 8270C
48	4,6-Dinitro-2-methylphenol	534521	National Toxics Rule	13.4	10	EPA 8270C
51	4-Nitrophenol	100027	USEPA Health Advisory	60	5	EPA 8270C
69	4-Bromophenyl phenyl ether	101553	Aquatic Toxicity	122	10	EPA 8270C
72	4-Chlorophenyl phenyl ether	7005723	Aquatic Toxicity	122 (3)	5	EPA 8270C
56	Acenaphthene	83329	Taste and Odor	20	1	EPA 8270C
57	Acenaphthylene	208968	No Criteria Available		10	EPA 8270C
58	Anthracene	120127	Calif. Toxics Rule	9,600	10	EPA 8270C
59	Benzidine	92875	National Toxics Rule	0.00012	5	EPA 8270C
61	Benzo(a)pyrene (3,4-Benzopyrene)	50328	Calif. Toxics Rule	0.0044	0.1	EPA 8270C
63	Benzo(g,h,i)perylene	191242	No Criteria Available		5	EPA 8270C

CTR #	Constituent	CAS Number	Controlling Water Quality Criterion for Surface Waters		Criterion Quantitation Limit ug/L or noted	Suggested Test Methods
			Basis	Criterion Concentration ug/L or noted[1]		
64	Benzo(k)fluoranthene	207089	Calif. Toxics Rule	0.0044	2	EPA 8270C
65	Bis(2-chloroethoxy) methane	111911	No Criteria Available		5	EPA 8270C
66	Bis(2-chloroethyl) ether	111444	National Toxics Rule	0.031	1	EPA 8270C
67	Bis(2-chloroisopropyl) ether	39638329	Aquatic Toxicity	122 (3)	10	EPA 8270C
68	Bis(2-ethylhexyl) phthalate	117817	National Toxics Rule	1.8	3	EPA 8270C
70	Butyl benzyl phthalate	85687	Aquatic Toxicity	3 (7)	10	EPA 8270C
73	Chrysene	218019	Calif. Toxics Rule	0.0044	5	EPA 8270C
81	Di-n-butylphthalate	84742	Aquatic Toxicity	3 (7)	10	EPA 8270C
84	Di-n-octylphthalate	117840	Aquatic Toxicity	3 (7)	10	EPA 8270C
74	Dibenzo(a,h)-anthracene	53703	Calif. Toxics Rule	0.0044	0.1	EPA 8270C
79	Diethyl phthalate	84662	Aquatic Toxicity	3 (7)	2	EPA 8270C
80	Dimethyl phthalate	131113	Aquatic Toxicity	3 (7)	2	EPA 8270C
86	Fluoranthene	206440	Calif. Toxics Rule	300	10	EPA 8270C
87	Fluorene	86737	Calif. Toxics Rule	1300	10	EPA 8270C
90	Hexachlorocyclopentadiene	77474	Taste and Odor	1	1	EPA 8270C
92	Indeno(1,2,3-c,d)pyrene	193395	Calif. Toxics Rule	0.0044	0.05	EPA 8270C
93	Isophorone	78591	National Toxics Rule	8.4	1	EPA 8270C
98	N-Nitrosodiphenylamine	86306	National Toxics Rule	5	1	EPA 8270C
96	N-Nitrosodimethylamine	62759	National Toxics Rule	0.00069	5	EPA 8270C
97	N-Nitrosodi-n-propylamine	621647	Calif. Toxics Rule	0.005	5	EPA 8270C
95	Nitrobenzene	98953	National Toxics Rule	17	10	EPA 8270C
53	Pentachlorophenol	87865	Calif. Toxics Rule	0.28	0.2	EPA 8270C
99	Phenanthrene	85018	No Criteria Available		5	EPA 8270C
54	Phenol	108952	Taste and Odor	5	1	EPA 8270C
100	Pyrene	129000	Calif. Toxics Rule	960	10	EPA 8270C
INORGANICS						
	Aluminum	7429905	Ambient Water Quality	87	50	EPA 6020/200.8
1	Antimony	7440360	Primary MCL	6	5	EPA 6020/200.8
2	Arsenic	7440382	Ambient Water Quality	0.018	0.01	EPA 1632
15	Asbestos	1332214	National Toxics Rule/ Primary MCL	7 MFL	0.2 MFL >10um	EPA/600/R-93/116(PCM)
	Barium	7440393	Basin Plan Objective	100	100	EPA 6020/200.8
3	Beryllium	7440417	Primary MCL	4	1	EPA 6020/200.8
4	Cadmium	7440439	Public Health Goal	0.07	0.25	EPA 1638/200.8
5a	Chromium (total)	7440473	Primary MCL	50	2	EPA 6020/200.8
5b	Chromium (VI)	18540299	Public Health Goal	0.2	0.5	EPA 7199/1636
6	Copper	7440508	National Toxics Rule	4.1 (2)	0.5	EPA 6020/200.8

CTR #	Constituent	CAS Number	Controlling Water Quality Criterion for Surface Waters		Criterion Quantitation Limit ug/L or noted	Suggested Test Methods
			Basis	Criterion Concentration ug/L or noted[1]		
14	Cyanide	57125	National Toxics Rule	5.2	5	EPA 9012A
	Fluoride	7782414	Public Health Goal	1000	0.1	EPA 300
	Iron	7439896	Secondary MCL	300	100	EPA 6020/200.8
7	Lead	7439921	Calif. Toxics Rule	0.92 (2)	0.5	EPA 1638
8	Mercury	7439976	TMDL Development		0.0002 (11)	EPA 1669/1631
	Manganese	7439965	Secondary MCL/ Basin Plan Objective	50	20	EPA 6020/200.8
9	Nickel	7440020	Calif. Toxics Rule	24 (2)	5	EPA 6020/200.8
10	Selenium	7782492	Calif. Toxics Rule	5 (8)	5	EPA 6020/200.8
11	Silver	7440224	Calif. Toxics Rule	0.71 (2)	1	EPA 6020/200.8
12	Thallium	7440280	National Toxics Rule	1.7	1	EPA 6020/200.8
	Tributyltin	688733	Ambient Water Quality	0.063	0.002	EV-024/025
13	Zinc	7440666	Calif. Toxics Rule/ Basin Plan Objective	54/ 16 (2)	10	EPA 6020/200.8
PESTICIDES - PCBs						
110	4,4'-DDD	72548	Calif. Toxics Rule	0.00083	0.02	EPA 8081A
109	4,4'-DDE	72559	Calif. Toxics Rule	0.00059	0.01	EPA 8081A
108	4,4'-DDT	50293	Calif. Toxics Rule	0.00059	0.01	EPA 8081A
112	alpha-Endosulfan	959988	National Toxics Rule	0.056 (9)	0.02	EPA 8081A
103	alpha-Hexachlorocyclohexane (BHC)	319846	Calif. Toxics Rule	0.0039	0.01	EPA 8081A
	Alachlor	15972608	Primary MCL	2	1	EPA 8081A
102	Aldrin	309002	Calif. Toxics Rule	0.00013	0.005	EPA 8081A
113	beta-Endosulfan	33213659	Calif. Toxics Rule	0.056 (9)	0.01	EPA 8081A
104	beta-Hexachlorocyclohexane	319857	Calif. Toxics Rule	0.014	0.005	EPA 8081A
107	Chlordane	57749	Calif. Toxics Rule	0.00057	0.1	EPA 8081A
106	delta-Hexachlorocyclohexane	319868	No Criteria Available		0.005	EPA 8081A
111	Dieldrin	60571	Calif. Toxics Rule	0.00014	0.01	EPA 8081A
114	Endosulfan sulfate	1031078	Ambient Water Quality	0.056	0.05	EPA 8081A
115	Endrin	72208	Calif. Toxics Rule	0.036	0.01	EPA 8081A
116	Endrin Aldehyde	7421934	Calif. Toxics Rule	0.76	0.01	EPA 8081A
117	Heptachlor	76448	Calif. Toxics Rule	0.00021	0.01	EPA 8081A
118	Heptachlor Epoxide	1024573	Calif. Toxics Rule	0.0001	0.01	EPA 8081A
105	Lindane (gamma-Hexachlorocyclohexane)	58899	Calif. Toxics Rule	0.019	0.019	EPA 8081A
119	PCB-1016	12674112	Calif. Toxics Rule	0.00017 (10)	0.5	EPA 8082
120	PCB-1221	11104282	Calif. Toxics Rule	0.00017 (10)	0.5	EPA 8082
121	PCB-1232	11141165	Calif. Toxics Rule	0.00017 (10)	0.5	EPA 8082
122	PCB-1242	53469219	Calif. Toxics Rule	0.00017 (10)	0.5	EPA 8082

CTR #	Constituent	CAS Number	Controlling Water Quality Criterion for Surface Waters		Criterion Quantitation Limit ug/L or noted	Suggested Test Methods
			Basis	Criterion Concentration ug/L or noted[1]		
123	PCB-1248	12672296	Calif. Toxics Rule	0.00017 (10)	0.5	EPA 8082
124	PCB-1254	11097691	Calif. Toxics Rule	0.00017 (10)	0.5	EPA 8082
125	PCB-1260	11096825	Calif. Toxics Rule	0.00017 (10)	0.5	EPA 8082
126	Toxaphene	8001352	Calif. Toxics Rule	0.0002	0.5	EPA 8081A
	Atrazine	1912249	Public Health Goal	0.15	1	EPA 8141A
	Bentazon	25057890	Primary MCL	18	2	EPA 643/ 515.2
	Carbofuran	1563662	CDFG Hazard Assess.	0.5	5	EPA 8318
	2,4-D	94757	Primary MCL	70	10	EPA 8151A
	Dalapon	75990	Ambient Water Quality	110	10	EPA 8151A
	1,2-Dibromo-3-chloropropane (DBCP)	96128	Public Health Goal	0.0017	0.01	EPA 8260B
	Di(2-ethylhexyl)adipate	103231	USEPA IRIS	30	5	EPA 8270C
	Dinoseb	88857	Primary MCL	7	2	EPA 8151A
	Diquat	85007	Ambient Water Quality	0.5	4	EPA 8340/ 549.1/HPLC
	Endothal	145733	Primary MCL	100	45	EPA 548.1
	Ethylene Dibromide	106934	OEHHA Cancer Risk	0.0097	0.02	EPA 8260B/504
	Glyphosate	1071836	Primary MCL	700	25	HPLC/EPA 547
	Methoxychlor	72435	Public Health Goal	30	10	EPA 8081A
	Molinate (Ordram)	2212671	CDFG Hazard Assess.	13	2	EPA 634
	Oxamyl	23135220	Public Health Goal	50	20	EPA 8318/632
	Picloram	1918021	Primary MCL	500	1	EPA 8151A
	Simazine (Princep)	122349	USEPA IRIS	3.4	1	EPA 8141A
	Thiobencarb	28249776	Basin Plan Objective/ Secondary MCL	1	1	HPLC/EPA 639
16	2,3,7,8-TCDD (Dioxin)	1746016	Calif. Toxics Rule	1.30E-08	5.00E-06	EPA 8290 (HRGC) MS
	2,4,5-TP (Silvex)	93765	Ambient Water Quality	10	1	EPA 8151A
	Diazinon	333415	CDFG Hazard Assess.	0.05	0.25	EPA 8141A/GCMS
	Chlorpyrifos	2921882	CDFG Hazard Assess.	0.014	1	EPA 8141A/GCMS
OTHER CONSTITUENTS						
	Ammonia (as N)	7664417	Ambient Water Quality	1500 (4)		EPA 350.1
	Chloride	16887006	Agricultural Use	106,000		EPA 300.0
	Flow			1 CFS		
	Hardness (as $CaCO_3$)			5000		EPA 130.2
	Foaming Agents (MBAS)		Secondary MCL	500		SM5540C
	Nitrate (as N)	14797558	Primary MCL	10,000	2,000	EPA 300.0
	Nitrite (as N)	14797650	Primary MCL	1000	400	EPA 300.0
	pH		Basin Plan Objective	6.5-8.5	0.1	EPA 150.1

CTR #	Constituent	CAS Number	Controlling Water Quality Criterion for Surface Waters		Criterion Quantitation Limit ug/L or noted	Suggested Test Methods
			Basis	Criterion Concentration ug/L or noted[1]		
	Phosphorus, Total (as P)	7723140	USEPA IRIS	0.14		EPA 365.3
	Specific conductance (EC)		Agricultural Use	700 umhos/cm		EPA 120.1
	Sulfate		Secondary MCL	250,000	500	EPA 300.0
	Sulfide (as S)		Taste and Odor	0.029		EPA 376.2
	Sulfite (as SO_3)		No Criteria Available			SM4500-SO3
	Temperature		Basin Plan Objective	^{o}F		
	Total Disolved Solids (TDS)		Agricultural Use	450,000		EPA 160.1

FOOTNOTES:

(1) - The Criterion Concentrations serve only as a point of reference for the selection of the appropriate analytical method. They do not indicate a regulatory decision that the cited concentration is either necessary or sufficient for full protection of beneficial uses. Available technology may require that effluent limits be set lower than these values.

(2) - Freshwater aquatic life criteria for metals are expressed as a function of total hardness (mg/L) in the water body. Values displayed correspond to a total hardness of 40 mg/L.

(3) - For haloethers

(4) - Freshwater aquatic life criteria for ammonia are expressed as a function of pH and temperature of the water body. Values displayed correspond to pH 8.0 and temperature of 22°C.

(5) - For nitrophenols.

(6) - For chlorinated naphthalenes.

(7) - For phthalate esters.

(8) - Basin Plan objective = 2 ug/L for Salt Slough and specific constructed channels in the Grassland watershed.

(9) - Criteria for sum of alpha- and beta- forms.

(10) - Criteria for sum of all PCBs.

(11) - Mercury monitoring shall utilize "ultra-clean" sampling and analytical methods. These methods include:

Method 1669: Sampling Ambient Water for Trace Metals at USEPA Water Quality Criteria Levels, USEPA; and

Method 1631: Mercury in Water by Oxidation, Purge and Trap, and Cold Vapor Atomic Fluoresence, USEPA

III. Additional Study Requirements

A. Laboratory Requirements. The laboratory analyzing the monitoring samples shall be certified by the Department of Health Services in accordance with the provisions of Water Code 13176 and must include quality assurance/quality control data with their reports (ELAP certified). In the event a certified laboratory is not available to the Discharger, analyses performed by a noncertified laboratory will be accepted provided a Quality Assurance-Quality Control Program is instituted by the laboratory. A manual containing the steps followed in this program must be kept in the laboratory and shall be available for inspection by Regional Water Board staff. The Quality Assurance-Quality Control Program must conform to USEPA guidelines or to procedures approved by the Regional Water Board.

B. Criterion Quantitation Limit (CQL). The criterion quantitation limits will be equal to or lower than the minimum levels (MLs) in Appendix 4 of the SIP or the detection limits for

purposes of reporting (DLRs) below the controlling water quality criterion concentrations summarized in Table I-1 of this Order. In cases where the controlling water quality criteria concentrations are below the detection limits of all approved analytical methods, the best available procedure will be utilized that meets the lowest of the MLs and DLR. Table I-1 contains suggested analytical procedures. The Discharger is not required to use these specific procedures as long as the procedure selected achieves the desired minimum detection level.

C. **Method Detection Limit (MDL**). The method detection limit for the laboratory shall be determined by the procedure found in 40 CFR Part 136, Appendix B (revised as of May 14, 1999).

D. **Reporting Limit (RL).** The reporting limit for the laboratory. This is the lowest quantifiable concentration that the laboratory can determine. Ideally, the RL should be equal to or lower than the CQL to meet the purposes of this monitoring.

E. **Reporting Protocols.** The results of analytical determinations for the presence of chemical constituents in a sample shall use the following reporting protocols:

1. Sample results greater than or equal to the reported RL shall be reported as measured by the laboratory (i.e., the measured chemical concentration in the sample).

2. Sample results less than the reported RL, but greater than or equal to the laboratory's MDL, shall be reported as "Detected, but Not Quantified," or DNQ. The estimated chemical concentration of the sample shall also be reported.

3. For the purposes of data collection, the laboratory shall write the estimated chemical concentration next to DNQ as well as the words "Estimated Concentration" (may shortened to "Est. Conc.). The laboratory, if such information is available, may include numerical estimates of the data quantity for the reported result. Numerical estimates of data quality may be percent accuracy (+ or – a percentage of the reported value), numerical ranges (low and high), or any other means considered appropriate by the laboratory.

4. Sample results that are less than the laboratory's MDL shall be reported as "Not Detected" or ND.

F. Data Format. The monitoring report shall contain the following information for each pollutant:

1. The name of the constituent.
2. Sampling location.
3. The date the sample was collected.
4. The time the sample was collected.
5. The date the sample was analyzed. For organic analyses, the extraction data will also be indicated to assure that hold times are not exceeded for prepared samples.
6. The analytical method utilized.
7. The measured or estimated concentration.
8. The required Criterion Quantitation Limit (CQL).
9. The laboratory's current Method Detection Limit (MDL), as determined by the procedure found in 40 CFR Part 136, Appendix B (revised as of May 14, 1999).
10. The laboratory's lowest reporting limit (RL).

111. Any additional comments.

ATTACHMENT J – DIOXIN AND FURAN SAMPLING

The CTR includes criteria for 2,3,7,8-tetrachlorodibenzo-pdioxin (2,3,7,8-TCDD). In addition to this compound, there are many congeners of chlorinated dibenzodioxins (2,3,7,8-CDDs) and chlorinated dibenzofurans (2,3,7,8-CDFs) that exhibit toxic effects similar to those of 2,3,7,8-TCDD. The USEPA has published toxic equivalency factors (TEFs) for 17 of the congeners. The TEFs express the relative toxicities of the congeners compared to 2,3,7,8-TCDD (whose TEF equals 1.0). In June 1997, participants in a World Health Organization (WHO) expert meeting revised TEF values for 1,2,3,7,8-PentaCDD, OctaCDD, and OctaCDF. The current TEFs for the 17 congeners, which include the three revised values, are shown below

Toxic Equivalency Factors (TEFs) for 2,3,7,8-TCDD Equivalents

Congener	TEF
2,3,7,8-TetraCDD	1
1,2,3,7,8-PentaCDD	1.0
1,2,3,4,7,8-HexaCDD	0.1
1,2,3,6,7,8-HexaCDD	0.1
1,2,3,7,8,9-HexaCDD	0.1
1,2,3,4,6,7,8-HeptaCDD	0.01
OctaCDD	0.0001
2,3,7,8-TetraCDF	0.1
1,2,3,7,8-PentaCDF	0.05
2,3,4,7,8-PentaCDF	0.5
1,2,3,4,7,8-HexaCDF	0.1
1,2,3,6,7,8-HexaCDF	0.1
1,2,3,7,8,9-HexaCDF	0.1
2,3,4,6,7,8-HexaCDF	0.1
1,2,3,4,6,7,8-HeptaCDF	0.01
1,2,3,4,7,8,9-HeptaCDF	0.01
OctaCDF	0.0001

The Discharger shall conduct effluent and receiving water monitoring for the 2,3,7,8-TCDD congeners listed above to assess the presence and amounts of the congeners being discharged and already present in the receiving water. Effluent and upstream receiving water shall be monitored for the presence of the 17 congeners once during dry weather and once during wet weather for 1 year within the term of the study.

The Discharger shall report, for each congener, the analytical results of the effluent and receiving water monitoring, including the quantifiable limit and the method detection limit, and the measured or estimated concentration.

In addition, the Discharger shall multiply each measured or estimated congener concentration by its respective TEF value and report the sum of these values

ATTACHMENT K - SUMMARY OF SPECIAL STUDIES

Following is a summary of all of the special studies that are required by this order:

Type of Special Study	Task	Compliance Date
Constituent Study		
	i. Submit Workplan and Time Schedule	Within 6 months of the effective date of Order
	ii. Begin Study	Within 3 months of Regional Board approval of Workplan and Time Schedule
	iii. Complete Study	As established by Task 1
	iv. Submit Study Report	60 days following completion of Task 3 (no greater than 2 years after the effective date of this Order)
Salinity / EC Study		
	1 - Submit Work plan and Time Schedule	Within 6 months of the effective date of the Order
	2 - Begin Study	Within 3 months of Regional Board approval of Workplan and Time Schedule
	3 - Complete Study	As established by Task 1
	4 - Submit Summary Report	60 days following completion of Task 3 (no greater than 2 years after the effective date of this Order)
Mixing Zone and Dilution Study		
	1 -Submit technical report: work plan and schedule for mixing zone and dilution study	Within 6 months following Order adoption
	2 -Commence mixing zone and dilution study	30 days following Executive Officer approval of Task 1.
	3 -Complete mixing zone and dilution study	As established by Task 1 and/or 2 years following Task 2, whichever is sooner
	4 -Submit technical report: mixing zone and dilution study	60 days following completion of Task 3.
	5 -Submit annual report describing the overall status of the mixing zone and dilution study	To be submitted in accordance with the MRP (Attachment E, Section X.D.1.)
Pollution Prevention Plans		
	1 - Submit Workplan and Time Schedule	Within 6 months of the effective date of Order
	2 - Begin Study	Within 3 months of Regional Board approval of Workplan and Time Schedule
	3 - Complete Study	As established by Task 1
	4 - Submit Summary Report	60 days following completion of Task 3 (no greater than 2 years after the effective date of this Order)