CALIFORNIA REGIONAL WATER QUALITY CONTROL BOARD
CENTRAL VALLEY REGION

11020 Sun Center Drive, #200 Rancho Cordova, California 95670-6114
Phone (916) 464-3291 • Fax (916) 464-4645
http://www.waterboards.ca.gov/centralvalley

ORDER R5-2015-0077
NPDES NO. CA0084697

WASTE DISCHARGE REQUIREMENTS FOR THE UNITED AUBURN INDIAN COMMUNITY THUNDER VALLEY CASINO WASTEWATER TREATMENT PLANT PLACER COUNTY

The following Discharger is subject to waste discharge requirements (WDR's) set forth in this Order:

Table 1. Discharger Information

Discharger	United Auburn Indian Community
Name of Facility	Thunder Valley Casino Wastewater Treatment Plant
Facility Address	1200 Athens Avenue
	Lincoln, CA 95648
	Placer County

Table 2. Discharge Location

Discharge Point	Effluent Description	Discharge Point Latitude (North)	Discharge Point Longitude (West)	Receiving Water
001	Treated Municipal Wastewater	38º 50' 44"	121º 19' 01"	Orchard Creek

Table 3. Administrative Information

This Order was adopted on:	**5 June 2015**
This Order shall become effective on:	**1 August 2015**
This Order shall expire on:	**31 July 2020**
The Discharger shall file a Report of Waste Discharge as an application for reissuance of WDR's in accordance with title 23, California Code of Regulations, and an application for reissuance of a National Pollutant Discharge Elimination System (NPDES) permit no later than:	**2 February 2020**
The U.S. Environmental Protection Agency (U.S. EPA) and the California Regional Water Quality Control Board, Central Valley Region have classified this discharge as follows:	Minor

I, Pamela C. Creedon, Executive Officer, do hereby certify that this Order with all attachments is a full, true, and correct copy of the Order adopted by the California Regional Water Quality Control Board, Central Valley Region, on **5 June 2015**.

ORIGINAL SIGNED BY

PAMELA C. CREEDON, Executive Officer

CONTENTS

I. Facility Information ... 3
II. Findings ... 3
III. Discharge Prohibitions ... 4
IV. Effluent Limitations and Discharge Specifications ... 4
A. Effluent Limitations – Discharge Point 001 ... 4
1. Final Effluent Limitations – Discharge Point 001 ... 4
2. Interim Effluent Limitations – Not Applicable ... 5
B. Land Discharge Specifications – Not Applicable ... 5
C. Recycling Specifications – Not Applicable ... 5
V. Receiving Water Limitations ... 6
A. Surface Water Limitations ... 6
B. Groundwater Limitations ... 7
VI. Provisions ... 8
A. Standard Provisions ... 8
B. Monitoring and Reporting Program (MRP) Requirements ... 11
C. Special Provisions ... 11
1. Reopener Provisions ... 11
2. Special Studies, Technical Reports and Additional Monitoring Requirements ... 12
3. Best Management Practices and Pollution Prevention ... 14
4. Construction, Operation and Maintenance Specifications ... 14
5. Special Provisions for Municipal Facilities (POTW's Only) ... 14
6. Other Special Provisions ... 16
7. Compliance Schedules – Not Applicable ... 17
VII. Compliance Determination ... 17

TABLES

Table 1. Discharger Information ... 1
Table 2. Discharge Location ... 1
Table 3. Administrative Information ... 1
Table 4. Effluent Limitations ... 4

ATTACHMENTS

Attachment A – Definitions ... A-1
Attachment B – Map ... B-1
Attachment C – Flow Schematic ... C-1
Attachment D – Standard Provisions ... D-1
Attachment E – Monitoring and Reporting Program ... E-1
Attachment F – Fact Sheet ... F-1
Attachment G – Summary Of Reasonable Potential Analysis ... G-1
Attachment H – Calculation of WQBEL'S ... H-1

I. FACILITY INFORMATION

Information describing the Thunder Valley Wastewater Treatment Plant (Facility) is summarized in Table 1 and in sections I and II of the Fact Sheet (Attachment F). Section I of the Fact Sheet also includes information regarding the Facility's permit application.

II. FINDINGS

The California Regional Water Quality Control Board, Central Valley Region (hereinafter Central Valley Water Board), finds:

A. Legal Authorities. This Order serves as WDR's pursuant to article 4, chapter 4, division 7 of the California Water Code (commencing with section 13260).This Order is also issued pursuant to section 402 of the federal Clean Water Act (CWA) and implementing regulations adopted by the U.S. EPA and chapter 5.5, division 7 of the Water Code (commencing with section 13370). It shall serve as an NPDES permit for point source discharges from this Facility to surface waters.

B. Background and Rationale for Requirements. The Central Valley Water Board developed the requirements in this Order based on information submitted as part of the application, through monitoring and reporting programs, and other available information. The Fact Sheet (Attachment F), which contains background information and rationale for the requirements in this Order, is hereby incorporated into and constitutes Findings for this Order. Attachments A through E and G through H are also incorporated into this Order.

C. Provisions and Requirements Implementing State Law. The provisions/requirements in subsections IV.B, IV.C, and V.B are included to implement state law only. These provisions/requirements are not required or authorized under the federal CWA; consequently, violations of these provisions/requirements are not subject to the enforcement remedies that are available for NPDES violations.

D. Monitoring and Reporting. 40 C.F.R. section 122.48 requires that all NPDES permits specify requirements for recording and reporting monitoring results. Water Code sections 13267 and 13383 authorize the Central Valley Water Board to require technical and monitoring reports. The Monitoring and Reporting Program establishes monitoring and reporting requirements to implement federal and State requirements. The Monitoring and Reporting Program is provided in Attachment E.

The technical and monitoring reports in this Order are required in accordance with Water Code section 13267, which states the following in subsection (b)(1), *"In conducting an investigation specified in subdivision (a), the regional board may require that any person who has discharged, discharges, or is suspected of having discharged discharging, or who proposes to discharge waste within its region, or any citizen or domiciliary, or political agency or entity of this state who has discharged, discharges, or is suspected of having discharged or discharging, or who proposes to discharge, waste outside of its region could affect the quality of waters within its region shall furnish, under penalty of perjury, technical or monitoring program reports which the regional board requires. The burden, including costs, of these reports shall bear a reasonable relationship to the need for the report and the benefits to be obtained from the reports. In requiring those reports, the regional board shall provide the person with a written explanation with regard to the need for the reports, and shall identify the evidence that supports requiring that person to provide the reports."*

The Discharger owns and operates the Facility subject to this Order. The monitoring reports required by this Order are necessary to determine compliance with this Order. The need for the monitoring reports is discussed in the Fact Sheet.

E. Notification of Interested Parties. The Central Valley Water Board has notified the Discharger and interested agencies and persons of its intent to prescribe WDR's for the discharge and has provided them with an opportunity to submit their written comments and recommendations. Details of the notification are provided in the Fact Sheet.

F. Consideration of Public Comment. The Central Valley Water Board, in a public meeting, heard and considered all comments pertaining to the discharge. Details of the Public Hearing are provided in the Fact Sheet.

THEREFORE, IT IS HEREBY ORDERED that Order R5-2010-0005 and Time Schedule Order R5-2014-0158 are rescinded upon the effective date of this Order except for enforcement purposes, and, in order to meet the provisions contained in division 7 of the Water Code (commencing with section 13000) and regulations adopted thereunder, and the provisions of the CWA and regulations and guidelines adopted thereunder, the Discharger shall comply with the requirements in this Order. This action in no way prevents the Central Valley Water Board from taking enforcement action for past violations of the previous Order.

III. DISCHARGE PROHIBITIONS

A. Discharge of wastewater from the Facility, as the Facility is specifically described in the Fact Sheet in section II.B, in a manner different from that described in this Order is prohibited.

B. The by-pass or overflow of wastes to surface waters is prohibited, except as allowed by Federal Standard Provisions I.G. and I.H. (Attachment D).

C. Neither the discharge nor its treatment shall create a nuisance as defined in section 13050 of the Water Code.

D. The Discharger shall not allow pollutant-free wastewater to be discharged into the treatment or disposal system in amounts that significantly diminish the system's capability to comply with this Order. Pollutant-free wastewater means rainfall, groundwater, cooling waters, and condensates that are essentially free of pollutants.

IV. EFFLUENT LIMITATIONS AND DISCHARGE SPECIFICATIONS

A. Effluent Limitations – Discharge Point 001

1. Final Effluent Limitations – Discharge Point 001

The Discharger shall maintain compliance with the following effluent limitations at Discharge Point 001, with compliance measured at Monitoring Location EFF-001 as described in the Monitoring and Reporting Program, Attachment E:

a. The Discharger shall maintain compliance with the effluent limitations specified in Table 4:

Table 4. Effluent Limitations

Parameter	Units	Effluent Limitations				
		Average Monthly	Average Weekly	Maximum Daily	Instantaneous Minimum	Instantaneous Maximum
Conventional Pollutants						
Biochemical Oxygen Demand (5-day @ 20°C)	mg/L	10	15	20	--	--
	lbs/day[1]	58	88	117	--	--
	lbs/day[2]	73	109	146	--	--
pH	standard units	--	--	--	6.5	8.5

Parameter	Units	Effluent Limitations				
		Average Monthly	Average Weekly	Maximum Daily	Instantaneous Minimum	Instantaneous Maximum
Total Suspended Solids	mg/L	10	15	20	--	--
	lbs/day[1]	58	88	117	--	--
	lbs/day[2]	73	109	146	--	--
Non-Conventional Pollutants						
Ammonia Nitrogen, Total (as N)	mg/L	1.1	1.8	--	--	--
	lbs/day[1]	6.4	11	--	--	--
	lbs/day[2]	8.0	13	--	--	--
Nitrate Plus Nitrite (as N)	mg/L	10	20	--	--	--

[1] Based on a maximum daily effluent flow of 0.70 MGD, effective immediately and until Executive Officer's written approval of flow increase (Special Provision VI.C.6.b).

[2] Based on a maximum daily effluent flow of 0.875 MGD, effective upon Executive Officer's written approval of flow increase (Special Provision VI.C.6.b).

b. **Percent Removal:** The average monthly percent removal of 5-day biochemical oxygen demand (BOD_5) and total suspended solids (TSS) shall not be less than 85 percent.

c. **Acute Whole Effluent Toxicity.** Survival of aquatic organisms in 96-hour bioassays of undiluted waste shall be no less than:

i. 70%, minimum for any one bioassay; and
ii. 90%, median for any three consecutive bioassays.

d. **Chronic Whole Effluent Toxicity.** There shall be no chronic toxicity in the effluent discharge.

e. **Total Coliform Organisms.** Effluent total coliform organisms shall not exceed:

i. 2.2 most probable number (MPN) per 100 mL, as a 7-day median;
ii. 23 MPN/100 mL, more than once in any 30-day period; and
iii. 240 MPN/100 mL, at any time.

f. **Maximum Daily Effluent Flow.** The maximum daily effluent flow shall not exceed:

i. 0.70 MGD effective immediately and until Executive Officer's written approval of increase indicated in Special Provision VI.C.6.b.

ii. 0.875 MGD upon Executive Officer's written approval of increase indicated in Special Provision VI.C.6.b.

g. **Mercury, total.** For a calendar year, the total annual mass discharge of total mercury shall not exceed 1.1 grams/year.

2. Interim Effluent Limitations – Not Applicable

B. Land Discharge Specifications – Not Applicable

C. Recycling Specifications – Not Applicable

V. RECEIVING WATER LIMITATIONS

A. Surface Water Limitations

The discharge shall not cause the following in Orchard Creek:

1. **Bacteria.** The fecal coliform concentration, based on a minimum of not less than five samples for any 30-day period, to exceed a geometric mean of 200 MPN/100 mL, nor more than 10 percent of the total number of fecal coliform samples taken during any 30-day period to exceed 400 MPN/100 mL.
2. **Biostimulatory Substances.** Water to contain biostimulatory substances which promote aquatic growths in concentrations that cause nuisance or adversely affect beneficial uses.
3. **Chemical Constituents.** Chemical constituents to be present in concentrations that adversely affect beneficial uses.
4. **Color.** Discoloration that causes nuisance or adversely affects beneficial uses.
5. **Dissolved Oxygen:**
   a. The monthly median of the mean daily dissolved oxygen concentration to fall below 85 percent of saturation in the main water mass;
   b. The 95 percentile dissolved oxygen concentration to fall below 75 percent of saturation; nor
   c. The dissolved oxygen concentration to be reduced below 7.0 mg/L at any time.
6. **Floating Material.** Floating material to be present in amounts that cause nuisance or adversely affect beneficial uses.
7. **Oil and Grease.** Oils, greases, waxes, or other materials to be present in concentrations that cause nuisance, result in a visible film or coating on the surface of the water or on objects in the water, or otherwise adversely affect beneficial uses.
8. **pH.** The pH to be depressed below 6.5 nor raised above 8.5.
9. **Pesticides:**
   a. Pesticides to be present, individually or in combination, in concentrations that adversely affect beneficial uses;
   b. Pesticides to be present in bottom sediments or aquatic life in concentrations that adversely affect beneficial uses;
   c. Total identifiable persistent chlorinated hydrocarbon pesticides to be present in the water column at concentrations detectable within the accuracy of analytical methods approved by U.S. EPA or the Executive Officer;
   d. Pesticide concentrations to exceed those allowable by applicable antidegradation policies (see State Water Board Resolution No. 68-16 and 40 C.F.R. 131.12.);
   e. Pesticide concentrations to exceed the lowest levels technically and economically achievable;
   f. Pesticides to be present in concentration in excess of the maximum contaminant levels (MCL's) set forth in CCR, Title 22, division 4, chapter 15; nor
   g. Thiobencarb to be present in excess of 1.0 µg/L.

10. **Radioactivity:**
    a. Radionuclides to be present in concentrations that are harmful to human, plant, animal, or aquatic life nor that result in the accumulation of radionuclides in the food web to an extent that presents a hazard to human, plant, animal, or aquatic life.
    b. Radionuclides to be present in excess of the MCL's specified in Table 64442 of section 64442 and Table 64443 of section 64443 of Title 22 of the California Code of Regulations.
11. **Suspended Sediments.** The suspended sediment load and suspended sediment discharge rate of surface waters to be altered in such a manner as to cause nuisance or adversely affect beneficial uses.
12. **Settleable Substances.** Substances to be present in concentrations that result in the deposition of material that causes nuisance or adversely affects beneficial uses.
13. **Suspended Material.** Suspended material to be present in concentrations that cause nuisance or adversely affect beneficial uses.
14. **Taste and Odors.** Taste- or odor-producing substances to be present in concentrations that impart undesirable tastes or odors to fish flesh or other edible products of aquatic origin, or that cause nuisance, or otherwise adversely affect beneficial uses.
15. **Temperature.** The natural temperature to be increased by more than 5°F.
16. **Toxicity.** Toxic substances to be present, individually or in combination, in concentrations that produce detrimental physiological responses in human, plant, animal, or aquatic life.
17. **Turbidity:**
    a. Shall not exceed 2 Nephelometric Turbidity Units (NTU) where natural turbidity is less than 1 NTU;
    b. Shall not increase more than 1 NTU where natural turbidity is between 1 and 5 NTUs;
    c. Shall not increase more than 20 percent where natural turbidity is between 5 and 50 NTUs;
    d. Shall not increase more than 10 NTU where natural turbidity is between 50 and 100 NTUs; nor
    e. Shall not increase more than 10 percent where natural turbidity is greater than 100 NTUs.

B. Groundwater Limitations

1. The discharge from the Facility shall not cause the underlying groundwater to be degraded.

VI. PROVISIONS

A. Standard Provisions

1. The Discharger shall comply with all Standard Provisions included in Attachment D.

2. The Discharger shall comply with the following provisions. In the event that there is any conflict, duplication, or overlap between provisions specified by this Order, the more stringent provision shall apply:

   a. If the Discharger's wastewater treatment plant is publicly owned or subject to regulation by California Public Utilities Commission, it shall be supervised and operated by persons possessing certificates of appropriate grade according to Title 23, CCR, division 3, chapter 26.

   b. After notice and opportunity for a hearing, this Order may be terminated or modified for cause, including, but not limited to:

      i. violation of any term or condition contained in this Order;

      ii. obtaining this Order by misrepresentation or by failing to disclose fully all relevant facts;

      iii. a change in any condition that requires either a temporary or permanent reduction or elimination of the authorized discharge; and

      iv. a material change in the character, location, or volume of discharge.

      The causes for modification include:

      i. *New regulations.* New regulations have been promulgated under section 405(d) of the CWA, or the standards or regulations on which the permit was based have been changed by promulgation of amended standards or regulations or by judicial decision after the permit was issued.

      ii. *Land application plans.* When required by a permit condition to incorporate a land application plan for beneficial reuse of sewage sludge, to revise an existing land application plan, or to add a land application plan.

      iii. *Change in sludge use or disposal practice.* Under 40 C.F.R. section 122.62(a)(1), a change in the Discharger's sludge use or disposal practice is a cause for modification of the permit. It is cause for revocation and reissuance if the Discharger requests or agrees.

      The Central Valley Water Board may review and revise this Order at any time upon application of any affected person or the Central Valley Water Board's own motion.

   c. If a toxic effluent standard or prohibition (including any scheduled compliance specified in such effluent standard or prohibition) is established under section 307(a) of the CWA, or amendments thereto, for a toxic pollutant that is present in the discharge authorized herein, and such standard or prohibition is more stringent than any limitation upon such pollutant in this Order, the Central Valley Water Board will revise or modify this Order in accordance with such toxic effluent standard or prohibition.

      The Discharger shall comply with effluent standards and prohibitions within the time provided in the regulations that establish those standards or prohibitions, even if this Order has not yet been modified.

   d. This Order shall be modified, or alternately revoked and reissued, to comply with any applicable effluent standard or limitation issued or approved under sections

301(b)(2)(C) and (D), 304(b)(2), and 307(a)(2) of the CWA, if the effluent standard or limitation so issued or approved:

i. Contains different conditions or is otherwise more stringent than any effluent limitation in the Order; or

ii. Controls any pollutant limited in the Order.

The Order, as modified or reissued under this paragraph, shall also contain any other requirements of the CWA then applicable.

e. The provisions of this Order are severable. If any provision of this Order is found invalid, the remainder of this Order shall not be affected.

f. The Discharger shall take all reasonable steps to minimize any adverse effects to waters of the State or users of those waters resulting from any discharge or sludge use or disposal in violation of this Order. Reasonable steps shall include such accelerated or additional monitoring as necessary to determine the nature and impact of the non-complying discharge or sludge use or disposal.

g. The Discharger shall ensure compliance with any existing or future pretreatment standard promulgated by U.S. EPA under section 307 of the CWA, or amendment thereto, for any discharge to the municipal system.

h. A copy of this Order shall be maintained at the discharge facility and be available at all times to operating personnel. Key operating personnel shall be familiar with its content.

i. Safeguard to electric power failure:

i. The Discharger shall provide safeguards to assure that, should there be reduction, loss, or failure of electric power, the discharge shall comply with the terms and conditions of this Order.

ii. Upon written request by the Central Valley Water Board, the Discharger shall submit a written description of safeguards. Such safeguards may include alternate power sources, standby generators, retention capacity, operating procedures, or other means. A description of the safeguards provided shall include an analysis of the frequency, duration, and impact of power failures experienced over the past 5 years on effluent quality and on the capability of the Discharger to comply with the terms and conditions of the Order. The adequacy of the safeguards is subject to the approval of the Central Valley Water Board.

iii. Should the treatment works not include safeguards against reduction, loss, or failure of electric power, or should the Central Valley Water Board not approve the existing safeguards, the Discharger shall, within 90 days of having been advised in writing by the Central Valley Water Board that the existing safeguards are inadequate, provide to the Central Valley Water Board and U.S. EPA a schedule of compliance for providing safeguards such that in the event of reduction, loss, or failure of electric power, the Discharger shall comply with the terms and conditions of this Order. The schedule of compliance shall, upon approval of the Central Valley Water Board, become a condition of this Order.

j. The Discharger, upon written request of the Central Valley Water Board, shall file with the Board a technical report on its preventive (failsafe) and contingency (cleanup) plans for controlling accidental discharges, and for minimizing the effect of

such events. This report may be combined with that required under the Central Valley Water Board Standard Provision contained in section VI.A.2.i of this Order.

The technical report shall:

i. Identify the possible sources of spills, leaks, untreated waste by-pass, and contaminated drainage. Loading and storage areas, power outage, waste treatment unit outage, and failure of process equipment, tanks and pipes should be considered.

ii. Evaluate the effectiveness of present facilities and procedures and state when they became operational.

iii. Predict the effectiveness of the proposed facilities and procedures and provide an implementation schedule containing interim and final dates when they will be constructed, implemented, or operational.

The Central Valley Water Board, after review of the technical report, may establish conditions which it deems necessary to control accidental discharges and to minimize the effects of such events. Such conditions shall be incorporated as part of this Order, upon notice to the Discharger.

k. A publicly owned treatment works whose waste flow has been increasing, or is projected to increase, shall estimate when flows will reach hydraulic and treatment capacities of its treatment and disposal facilities. The projections shall be made in January, based on the last 3 years' average dry weather flows, peak wet weather flows and total annual flows, as appropriate. When any projection shows that capacity of any part of the facilities may be exceeded in 4 years, the Discharger shall notify the Central Valley Water Board by 31 January. A copy of the notification shall be sent to appropriate local elected officials, local permitting agencies and the press. Within 120 days of the notification, the Discharger shall submit a technical report showing how it will prevent flow volumes from exceeding capacity or how it will increase capacity to handle the larger flows. The Central Valley Water Board may extend the time for submitting the report.

l. The Discharger shall submit technical reports as directed by the Executive Officer. All technical reports required herein that involve planning, investigation, evaluation, or design, or other work requiring interpretation and proper application of engineering or geologic sciences, shall be prepared by or under the direction of persons registered to practice in California pursuant to California Business and Professions Code, sections 6735, 7835, and 7835.1. To demonstrate compliance with Title 16, CCR, sections 415 and 3065, all technical reports must contain a statement of the qualifications of the responsible registered professional(s). As required by these laws, completed technical reports must bear the signature(s) and seal(s) of the registered professional(s) in a manner such that all work can be clearly attributed to the professional responsible for the work.

m. The Central Valley Water Board is authorized to enforce the terms of this permit under several provisions of the Water Code, including, but not limited to, sections 13385, 13386, and 13387.

n. For publicly owned treatment works, prior to making any change in the point of discharge, place of use, or purpose of use of treated wastewater that results in a permanent decrease of flow in any portion of a watercourse, the Discharger must file a petition with the State Water Board, Division of Water Rights, and receive approval for such a change. (Water Code section 1211).

o. In the event of any change in control or ownership of land or waste discharge facilities presently owned or controlled by the Discharger, the Discharger shall notify the succeeding owner or operator of the existence of this Order by letter, a copy of which shall be immediately forwarded to the Central Valley Water Board.

To assume operation under this Order, the succeeding owner or operator must apply in writing to the Executive Officer requesting transfer of the Order. The request must contain the requesting entity's full legal name, the state of incorporation if a corporation, address and telephone number of the persons responsible for contact with the Central Valley Water Board and a statement. The statement shall comply with the signatory and certification requirements in the federal Standard Provisions (Attachment D, section V.B) and state that the new owner or operator assumes full responsibility for compliance with this Order. Failure to submit the request shall be considered a discharge without requirements, a violation of the Water Code. Transfer shall be approved or disapproved in writing by the Executive Officer.

p. Failure to comply with provisions or requirements of this Order, or violation of other applicable laws or regulations governing discharges from this facility, may subject the Discharger to administrative or civil liabilities, criminal penalties, and/or other enforcement remedies to ensure compliance. Additionally, certain violations may subject the Discharger to civil or criminal enforcement from appropriate local, state, or federal law enforcement entities.

q. In the event the Discharger does not comply or will be unable to comply for any reason, with any prohibition, effluent limitation, or receiving water limitation of this Order, the Discharger shall notify the Central Valley Water Board by telephone (916) 464-3291 within 24 hours of having knowledge of such noncompliance, and shall confirm this notification in writing within five days, unless the Central Valley Water Board waives confirmation. The written notification shall state the nature, time, duration, and cause of noncompliance, and shall describe the measures being taken to remedy the current noncompliance and prevent recurrence including, where applicable, a schedule of implementation. Other noncompliance requires written notification as above at the time of the normal monitoring report.

B. Monitoring and Reporting Program (MRP) Requirements

The Discharger shall comply with the MRP, and future revisions thereto, in Attachment E.

C. Special Provisions

1. Reopener Provisions

a. Conditions that necessitate a major modification of a permit are described in 40 C.F.R. section 122.62, including, but not limited to:

i. If new or amended applicable water quality standards are promulgated or approved pursuant to section 303 of the CWA, or amendments thereto, this permit may be reopened and modified in accordance with the new or amended standards.

ii. When new information, that was not available at the time of permit issuance, would have justified different permit conditions at the time of issuance.

b. This Order may be reopened for modification, or revocation and reissuance, as a result of the detection of a reportable priority pollutant generated by special conditions included in this Order. These special conditions may be, but are not

limited to, fish tissue sampling, whole effluent toxicity, monitoring requirements on internal waste stream(s), and monitoring for surrogate parameters. Additional requirements may be included in this Order as a result of the special condition monitoring data.

c. **Mercury.** If mercury is found to be causing toxicity based on acute or chronic toxicity test results, or if a TMDL program is adopted, this Order shall be reopened and the mass effluent limitation modified (higher or lower) or an effluent concentration limitation imposed. If the Central Valley Water Board determines that a mercury offset program is feasible for Dischargers subject to a NPDES permit, then this Order may be reopened to reevaluate the mercury mass loading limitation(s) and the need for a mercury offset program for the Discharger.

d. **Whole Effluent Toxicity.** As a result of a Toxicity Reduction Evaluation (TRE), this Order may be reopened to include a numeric chronic toxicity limitation, a new acute toxicity limitation, and/or a limitation for a specific toxicant identified in the TRE. Additionally, if the State Water Board revises the SIP's toxicity control provisions that would require the establishment of numeric chronic toxicity effluent limitations, this Order may be reopened to include a numeric chronic toxicity effluent limitation based on the new provisions.

e. **Water Effects Ratios (WER) and Metal Translators.** A default WER of 1.0 has been used in this Order for calculating criteria for applicable inorganic constituents, except for copper. In addition, default dissolved-to-total metal translators have been used to convert water quality objectives from dissolved to total recoverable. If the Discharger performs studies to determine site-specific WERs and/or site-specific dissolved-to-total metal translators, this Order may be reopened to modify the effluent limitations for the applicable inorganic constituents.

f. **Ultraviolet Light (UV) Disinfection Operating Specifications.** The UV operating specifications in this Order are based on the UV guidelines developed by the National Water Research Institute (NWRI) and American Water Works Association Research Foundation (AWWARF) titled, "*Ultraviolet Disinfection Guidelines for Drinking Water and Water Reuse*." If the Discharger conducts a site-specific UV engineering study that identifies site-specific UV operating specifications that will achieve the virus inactivation equivalent to Title 22 disinfected tertiary recycled water, this Order may be reopened to modify the UV operating specifications.

2. Special Studies, Technical Reports and Additional Monitoring Requirements

a. **Toxicity Reduction Evaluation Requirements.** For compliance with the Basin Plan's narrative toxicity objective, this Order requires the Discharger to conduct chronic whole effluent toxicity (WET) testing, as specified in MRP section V. Furthermore, this Provision requires the Discharger to investigate the causes of, and identify corrective actions to reduce or eliminate effluent toxicity. If the discharge exceeds the numeric toxicity monitoring trigger during accelerated monitoring established in this Provision, the Discharger is required to initiate a Toxicity Reduction Evaluation (TRE) in accordance with an approved TRE Work Plan or conduct a toxicity evaluation study approved by the Executive Officer, and take actions to mitigate the impact of the discharge and prevent recurrence of toxicity. A TRE is a site-specific study conducted in a stepwise process to identify the source(s) of toxicity and the effective control measures for effluent toxicity. TREs are designed to identify the causative agents and sources of whole effluent toxicity, evaluate the effectiveness of the toxicity control options, and confirm the reduction in effluent toxicity. The discharge experienced intermittent and low level effluent

chronic reproductive toxicity to *Ceriodaphnia dubia*. Subsequently, the Discharger in April 2014 completed a TRE that was inconclusive, but suspected that low effluent hardness impaired *Ceriodaphnia dubia* and might be the cause of the chronic toxicity. Therefore to identify the source of toxicity and effective control measures for effluent chronic reproductive toxicity to *Ceriodaphnia dubia*, the Discharger may conduct a toxicity evaluation study, individually or as part of a coordinated group effort with other dischargers to evaluate low level and intermittent toxicity in effluent disinfected by an ultraviolet system and/or evaluate the toxic effects of low hardness effluent. Information on approved toxicity evaluation studies conducted within the Central Valley Region is provided in the Fact Sheet. This Provision includes procedures for accelerated chronic toxicity monitoring and TRE initiation.

i. **Accelerated Monitoring and TRE Initiation.** When the numeric toxicity monitoring trigger is exceeded during regular chronic toxicity monitoring, and the testing meets all test acceptability criteria, the Discharger shall initiate accelerated monitoring as required in the Accelerated Monitoring Specifications. The Discharger shall initiate a TRE to address effluent toxicity if any WET testing results exceed the numeric toxicity monitoring trigger during accelerated monitoring.

ii. **Numeric Toxicity Monitoring Trigger.** The numeric toxicity monitoring trigger to initiate a TRE is >1 TUc (where TUc = 100/NOEC). The monitoring trigger is not an effluent limitation; it is the toxicity threshold at which the Discharger is required to begin accelerated monitoring and initiate a TRE.

iii. **Accelerated Monitoring Specifications.** If the numeric toxicity monitoring trigger is exceeded during regular chronic toxicity testing, the Discharger shall initiate accelerated monitoring within 14-days of notification by the laboratory of the exceedance. Accelerated monitoring shall consist of four chronic toxicity tests conducted once every two weeks using the species that exhibited toxicity. The following protocol shall be used for accelerated monitoring and TRE initiation:

(a) If the results of four consecutive accelerated monitoring tests do not exceed the monitoring trigger, the Discharger may cease accelerated monitoring and resume regular chronic toxicity monitoring. However, notwithstanding the accelerated monitoring results, if there is adequate evidence of a pattern of effluent toxicity, the Executive Officer may require that the Discharger initiate a TRE.

(b) If the source(s) of the toxicity is easily identified (e.g., temporary plant upset), the Discharger shall make necessary corrections to the facility and shall continue accelerated monitoring until four consecutive accelerated tests do not exceed the monitoring trigger. Upon confirmation that the effluent toxicity has been removed, the Discharger may cease accelerated monitoring and resume regular chronic toxicity monitoring.

(c) If the result of any accelerated toxicity test exceeds the monitoring trigger, the Discharger shall cease accelerated monitoring and begin a TRE to investigate the cause(s) of, and identify corrective actions to reduce or eliminate effluent toxicity. Within thirty (30) days of notification by the laboratory of any test result exceeding the monitoring trigger during accelerated monitoring, the Discharger shall submit a TRE Action Plan to the Central Valley Water Board including, at minimum:

(1) Specific actions the Discharger will take to investigate and identify the cause(s) of toxicity, including a TRE WET monitoring schedule;

(2) Specific actions the Discharger will take to mitigate the impact of the discharge and prevent the recurrence of toxicity; and

(3) A schedule for these actions.

3. Best Management Practices and Pollution Prevention

a. **Salinity Evaluation and Minimization Plan.** The Discharger shall continue to implement its salinity evaluation and minimization plan to identify and address sources of salinity from the Facility.

4. Construction, Operation and Maintenance Specifications

a. The treatment facilities shall be designed, constructed, operated, and maintained to prevent inundation or washout due to floods with a 100-year return frequency.

b. **Filtration System Operating Specifications.** To ensure the filtration system is operating properly to provide adequate disinfection of the wastewater, the turbidity of the filter effluent measured at Monitoring Location FIL-001 shall not exceed:

i. 0.2 NTU more than 5 percent of the time within a 24-hour period; and
ii. 0.5 NTU at any time.

c. **Ultraviolet Light (UV) Disinfection System Operating Specifications.** The UV disinfection system must be operated in accordance with an operations and maintenance program that assures adequate disinfection, and shall meet the following minimum specifications to provide virus inactivation equivalent to Title 22 Disinfected Tertiary Recycled Water:

i. **UV Dose.** The minimum hourly average UV dose in the UV reactor shall be 80 millijoules per square centimeter (mJ/cm^2).

ii. **UV Transmittance**. The minimum hourly average UV transmittance (at 254 nanometers) in the wastewater measured at Monitoring Location UVS-001 shall not fall below 65 percent.

iii. The lamp sleeves and cleaning system components must be visually inspected per the manufacturer's operations manual for physical wear (scoring, solarization, seal leaks, cleaning fluid levels, etc.) and to check the efficacy of the cleaning system.

iv. The lamp sleeves must be cleaned periodically as necessary to meet the UV dose requirements.

v. Lamps must be replaced per the manufacturer's operations manual, or sooner, if there are indications the lamps are failing to provide adequate disinfection. Lamp age and lamp replacement records must be maintained.

5. Special Provisions for Municipal Facilities (POTW's Only)

a. **Sludge/Biosolids Treatment or Discharge Specifications.** Sludge in this document means the solid, semisolid, and liquid residues removed during primary, secondary, or advanced wastewater treatment processes. Solid waste refers to grit and screening material generated during preliminary treatment. Residual sludge means sludge that will not be subject to further treatment at the wastewater treatment plant. Biosolids refer to sludge that has been treated and tested and

shown to be capable of being beneficially and legally used pursuant to federal and state regulations as a soil amendment for agricultural, silvicultural, horticultural, and land reclamation activities as specified under 40 C.F.R. part 503.

i. Collected screenings, residual sludge, biosolids, and other solids removed from liquid wastes shall be disposed of in a manner approved by the Executive Officer, and consistent with Consolidated Regulations for Treatment, Storage, Processing, or Disposal of Solid Waste, as set forth in Title 27, CCR, division 2, subdivision 1, section 20005, et seq. Removal for further treatment, storage, disposal, or reuse at sites (e.g., landfill, composting sites, soil amendment sites) that are operated in accordance with valid waste discharge requirements issued by a Regional Water Board will satisfy these specifications.

Sludge and solid waste shall be removed from screens, sumps, ponds, clarifiers, etc. as needed to ensure optimal plant performance.

The treatment of sludge generated at the Facility shall be confined to the Facility property and conducted in a manner that precludes infiltration of waste constituents into soils in a mass or concentration that will violate groundwater limitations in section V.B. of this Order. In addition, the storage of residual sludge, solid waste, and biosolids on Facility property shall be temporary and controlled, and contained in a manner that minimizes leachate formation and precludes infiltration of waste constituents into soils in a mass or concentration that will violate groundwater limitations included in section V.B. of this Order.

ii. The use, disposal, storage, and transportation of biosolids shall comply with existing federal and state laws and regulations, including permitting requirements and technical standards included in 40 C.F.R. part 503. If the State Water Board and the Central Valley Water Board are given the authority to implement regulations contained in 40 C.F.R. part 503, this Order may be reopened to incorporate appropriate time schedules and technical standards. The Discharger must comply with the standards and time schedules contained in 40 C.F.R. part 503 whether or not they have been incorporated into this Order.

iii. The Discharger shall comply with Section IX.A. Biosolids of the Monitoring and Reporting Program, Attachment E.

iv. Any proposed change in biosolids use or disposal practice from a previously approved practice shall be reported to the Executive Officer and U.S. EPA Regional Administrator at least **90 days** in advance of the change.

v. The Discharger shall maintain a biosolids use or disposal plan that describes at minimum:

(a) Sources and amounts of biosolids generated annually.

(b) Location(s) of on-site storage and description of the containment area.

(c) Plans for ultimate disposal. For landfill disposal, include the present classification of the landfill; and the name and location of the landfill.

b. **Sanitary Sewer System Operation, Maintenance, and Overflow Protection.** The Discharger shall maintain all portions of the wastewater collection system to assure compliance with this Order. Collection system overflows and/or discharges are prohibited by this Order.

All violations of this Order must be reported as specified in the Standard Provisions (Attachment D) and the public shall be notified, in coordination with DDW or U.S. EPA, in areas that have been contaminated with sewage. All parties with a reasonable potential for exposure to a sewage overflow shall be notified.

6. Other Special Provisions

a. **Title 22, or Equivalent, Disinfection Requirements.** Wastewater shall be oxidized, coagulated, filtered, and adequately disinfected pursuant to the State Water Board, Division of Drinking Water (DDW) reclamation criteria, CCR, Title 22, division 4, chapter 3, (Title 22), or equivalent.

b. **Phase 2 Facility Expansion**.

i. **Alternatives Analysis**. The Facility has been expanded to 0.7 MGD peak design flow in 2010 and remains at this capacity corresponding with the first phase of the Thunder Valley Casino expansion. The Tribe may seek to complete all or portions of the second phase expansion in the next five years, which may necessitate the expansion of the Facility to 0.875 MGD. The second phase of the expansion is approved by the Tribe, and Placer County has also agreed to Conditions of Approval; however, the exact schedule for development has not been determined. The Discharger has requested to retain the ability to expand allowable flows to be discharged to Orchard Creek to accommodate flows associated with Phase 2 of the Thunder Valley Casino Upgrade Project. Prior to the commencement of construction of the second phase of the Thunder Valley Casino Upgrade Project, the Discharger shall submit an updated alternatives analysis to the Central Valley Water Board for approval by the Executive Officer. The alternatives analysis shall evaluate implementation of feasible alternative control measures which might reduce or eliminate the need for the increased discharge. The analysis must consider, at a minimum, whether regionalization has become feasible.

ii. **Increased Flow**. Upon approval of the alternatives analysis in section VI.C.6.b.i by the Executive Officer, the permitted maximum daily effluent flow may increase to 0.875 MGD upon compliance with the following conditions:

(a) **Effluent and Receiving Water Limitation Compliance**. The discharge shall demonstrate compliance with Effluent Limitations IV.A and Receiving Water Surface Limitations V.A.

(b) **Facility Expansions**. The Discharger shall have completed construction of the second phase of the Thunder Valley Casino Upgrade Project, as described in the Fact Sheet in section II.E.

(c) **Request for Increase**. The Discharger shall submit to the Central Valley Water Board a request for an increase in the permitted discharge flow rate, which demonstrates compliance with items (a) and (b) of this provision. The increase in the permitted discharge flow rate shall not be effective until the Executive Officer verifies compliance with Special Provisions VI.C.6.b.ii and approves the Discharger's request.

c. **Regionalization**. The Discharger has committed to participating in a permanent gravity sewer line project connecting the Facility to the City of Lincoln Wastewater Treatment and Reclamation Facility in accordance with an MOU with the City of Lincoln. The gravity sewer line is not currently available due to lack of funding from

other potential users and the lack of required easements and permits. The Discharger agreed in the MOU to connect to the gravity sewer line if it becomes available. Should the City of Lincoln gravity sewer line project become feasible and is planned for implementation, no later than 6 months prior to the anticipated completion of a permanent gravity sewer line, the Discharger shall submit to the Central Valley Water Board a time schedule for ceasing the discharge from the Facility to Orchard Creek and connecting to the permanent sewer line. The time schedule shall provide for connection to the permanent sewer line no later than 1 year after the completion of a permanent gravity sewer line. Any request for extension of the 1 year time schedule, or for continued discharge to Orchard Creek, shall be supported by an updated alternatives analysis demonstrating that connection within 1 year is not feasible and the proposed alternative meets the antidegradation provision of 40 C.F.R. section 131.12 and Resolution 68-16.

7. Compliance Schedules – Not Applicable

VII. COMPLIANCE DETERMINATION

A. BOD_5 and TSS Effluent Limitations (Sections IV.A.1.a and IV.A.1.b). Compliance with the final effluent limitations for BOD_5 and TSS required in Limitations and Discharge Requirements sections IV.A.1.a shall be ascertained by 24-hour composite samples. Compliance with effluent limitations required in Limitations and Discharge Requirements sections IV.A.1.b for percent removal shall be calculated using the arithmetic mean of BOD_5 and TSS in effluent samples collected over a monthly period as a percentage of the arithmetic mean of the values for influent samples collected at approximately the same times during the same period.

B. Total Mercury Mass Loading Effluent Limitations (Section IV.A.1.g). The procedures for calculating mass loadings are as follows:

1. The total pollutant mass load for each individual calendar month shall be determined using an average of all concentration data collected that month and the corresponding total monthly flow. All effluent monitoring data collected under the monitoring and reporting program, pretreatment program, and any special studies shall be used for these calculations. The total annual mass loading shall be the sum of the individual calendar months.
2. In calculating compliance, the Discharger shall count all non-detect measures at one-half of the detection level. If compliance with the effluent limitation is not attained due to the non-detect contribution, the Discharger shall improve and implement available analytical capabilities and compliance shall be evaluated with consideration of the detection limits.

C. Total Coliform Organisms Effluent Limitations (Section IV.A.1.e). For each day that an effluent sample is collected and analyzed for total coliform organisms, the 7-day median shall be determined by calculating the median concentration of total coliform bacteria in the effluent utilizing the bacteriological results of the last 7 days. For example, if a sample is collected on a Wednesday, the result from that sampling event and all results from the previous 6 days (i.e., Tuesday, Monday, Sunday, Saturday, Friday, and Thursday) are used to calculate the 7-day median. If the 7-day median of total coliform organisms exceeds a most probable number (MPN) of 2.2 per 100 milliliters, the Discharger will be considered out of compliance.

D. Mass Effluent Limitations. The mass effluent limitations contained in the Final Effluent Limitations IV.A.1.a are based on the permitted maximum daily discharge flow and calculated as follows:

Mass (lbs/day) = Flow (MGD) x Concentration (mg/L) x 8.34 (conversion factor)

If the effluent flow exceeds the permitted average dry weather flow during wet-weather seasons, the effluent mass limitations contained in Final Effluent Limitations IV.A.1.a shall not apply. If the effluent flow is below the permitted average dry weather flow during wet-weather seasons, the effluent mass limitations do apply.

E. Priority Pollutant Effluent Limitations. Compliance with effluent limitations for priority pollutants shall be determined in accordance with Section 2.4.5 of the SIP, as follows:

1. Dischargers shall be deemed out of compliance with an effluent limitation, if the concentration of the priority pollutant in the monitoring sample is greater than the effluent limitation and greater than or equal to the reporting level (RL).
2. Dischargers shall be required to conduct a Pollutant Minimization Program (PMP) in accordance with section 2.4.5.1 of the SIP when there is evidence that the priority pollutant is present in the effluent above an effluent limitation and either:
   a. A sample result is reported as detected, but not quantified (DNQ) and the effluent limitation is less than the RL; or
   b. A sample result is reported as non-detect (ND) and the effluent limitation is less than the method detection limit (MDL).
3. When determining compliance with an average monthly effluent limitation (AMEL) and more than one sample result is available in a month, the discharger shall compute the arithmetic mean unless the data set contains one or more reported determinations of DNQ or ND. In those cases, the discharger shall compute the median in place of the arithmetic mean in accordance with the following procedure:
   a. The data set shall be ranked from low to high, reported ND determinations lowest, DNQ determinations next, followed by quantified values (if any). The order of the individual ND or DNQ determinations is unimportant.
   b. The median value of the data set shall be determined. If the data set has an odd number of data points, then the median is the middle value. If the data set has an even number of data points, then the median is the average of the two values around the middle unless one or both of the points are ND or DNQ, in which case the median value shall be the lower of the two data points where DNQ is lower than a value and ND is lower than DNQ.
4. If a sample result, or the arithmetic mean or median of multiple sample results, is below the RL, and there is evidence that the priority pollutant is present in the effluent above an effluent limitation and the discharger conducts a PMP (as described in section 2.4.5.1), the discharger shall <u>not</u> be deemed out of compliance.

F. Chronic Whole Effluent Toxicity Effluent Limitation (Section IV.A.1.d). Compliance with the accelerated monitoring and TRE provisions of Provision VI.C.2.a shall constitute compliance with the effluent limitation.

G. Use of Delta Regional Monitoring Program and Other Receiving Water Data to Determine Compliance with Receiving Water Limitations. Delta Regional Monitoring Program data and other receiving water monitoring data that is not specifically required to be conducted by the Discharger under this permit will not be used directly to determine that the discharge is in violation of this Order. The Discharger may, however, conduct any site-specific receiving water monitoring deemed appropriate by the Discharger that is not conducted by the Delta Regional Monitoring Program and submit that monitoring data. As described in section VIII of Attachment E, such data may be used, if scientifically defensible, in conjunction with other receiving water data, effluent data, receiving water flow data, and other pertinent information to determine whether or not a discharge is in compliance with this Order.

ATTACHMENT A – DEFINITIONS

Arithmetic Mean (μ)
Also called the average, is the sum of measured values divided by the number of samples. For ambient water concentrations, the arithmetic mean is calculated as follows:

Arithmetic mean = $\mu = \Sigma x / n$ where: Σx is the sum of the measured ambient water concentrations, and n is the number of samples.

Average Monthly Effluent Limitation (AMEL)
The highest allowable average of daily discharges over a calendar month, calculated as the sum of all daily discharges measured during a calendar month divided by the number of daily discharges measured during that month.

Average Weekly Effluent Limitation (AWEL)
The highest allowable average of daily discharges over a calendar week (Sunday through Saturday), calculated as the sum of all daily discharges measured during a calendar week divided by the number of daily discharges measured during that week.

Bioaccumulative
Those substances taken up by an organism from its surrounding medium through gill membranes, epithelial tissue, or from food and subsequently concentrated and retained in the body of the organism.

Carcinogenic
Pollutants are substances that are known to cause cancer in living organisms.

Coefficient of Variation (CV)
CV is a measure of the data variability and is calculated as the estimated standard deviation divided by the arithmetic mean of the observed values.

Daily Discharge
Daily Discharge is defined as either: (1) the total mass of the constituent discharged over the calendar day (12:00 am through 11:59 pm) or any 24-hour period that reasonably represents a calendar day for purposes of sampling (as specified in the permit), for a constituent with limitations expressed in units of mass or; (2) the unweighted arithmetic mean measurement of the constituent over the day for a constituent with limitations expressed in other units of measurement (e.g., concentration).

The daily discharge may be determined by the analytical results of a composite sample taken over the course of one day (a calendar day or other 24-hour period defined as a day) or by the arithmetic mean of analytical results from one or more grab samples taken over the course of the day.

For composite sampling, if 1 day is defined as a 24-hour period other than a calendar day, the analytical result for the 24-hour period will be considered as the result for the calendar day in which the 24-hour period ends.

Detected, but Not Quantified (DNQ)
DNQ are those sample results less than the RL, but greater than or equal to the laboratory's MDL. Sample results reported as DNQ are estimated concentrations.

Dilution Credit
Dilution Credit is the amount of dilution granted to a discharge in the calculation of a water quality-based effluent limitation, based on the allowance of a specified mixing zone. It is calculated from the dilution ratio or determined through conducting a mixing zone study or modeling of the discharge and receiving water.

Effluent Concentration Allowance (ECA)
ECA is a value derived from the water quality criterion/objective, dilution credit, and ambient background concentration that is used, in conjunction with the coefficient of variation for the effluent monitoring data, to calculate a long-term average (LTA) discharge concentration. The ECA has the same meaning as waste load allocation (WLA) as used in U.S. EPA guidance (Technical Support Document For Water Quality-based Toxics Control, March 1991, second printing, EPA/505/2-90-001).

Enclosed Bays
Enclosed Bays means indentations along the coast that enclose an area of oceanic water within distinct headlands or harbor works. Enclosed bays include all bays where the narrowest distance between the headlands or outermost harbor works is less than 75 percent of the greatest dimension of the enclosed portion of the bay. Enclosed bays include, but are not limited to, Humboldt Bay, Bodega Harbor, Tomales Bay, Drake's Estero, San Francisco Bay, Morro Bay, Los Angeles-Long Beach Harbor, Upper and Lower Newport Bay, Mission Bay, and San Diego Bay. Enclosed bays do not include inland surface waters or ocean waters.

Estimated Chemical Concentration
The estimated chemical concentration that results from the confirmed detection of the substance by the analytical method below the ML value.

Estuaries
Estuaries means waters, including coastal lagoons, located at the mouths of streams that serve as areas of mixing for fresh and ocean waters. Coastal lagoons and mouths of streams that are temporarily separated from the ocean by sandbars shall be considered estuaries. Estuarine waters shall be considered to extend from a bay or the open ocean to a point upstream where there is no significant mixing of fresh water and seawater. Estuarine waters included, but are not limited to, the Sacramento-San Joaquin Delta, as defined in Water Code section 12220, Suisun Bay, Carquinez Strait downstream to the Carquinez Bridge, and appropriate areas of the Smith, Mad, Eel, Noyo, Russian, Klamath, San Diego, and Otay rivers. Estuaries do not include inland surface waters or ocean waters.

Inland Surface Waters
All surface waters of the state that do not include the ocean, enclosed bays, or estuaries.

Instantaneous Maximum Effluent Limitation
The highest allowable value for any single grab sample or aliquot (i.e., each grab sample or aliquot is independently compared to the instantaneous maximum limitation).

Instantaneous Minimum Effluent Limitation
The lowest allowable value for any single grab sample or aliquot (i.e., each grab sample or aliquot is independently compared to the instantaneous minimum limitation).

Maximum Daily Effluent Limitation (MDEL)
The highest allowable daily discharge of a pollutant, over a calendar day (or 24-hour period). For pollutants with limitations expressed in units of mass, the daily discharge is calculated as the total mass of the pollutant discharged over the day. For pollutants with limitations expressed in other units of measurement, the daily discharge is calculated as the arithmetic mean measurement of the pollutant over the day.

Median
The middle measurement in a set of data. The median of a set of data is found by first arranging the measurements in order of magnitude (either increasing or decreasing order). If the number of

measurements (n) is odd, then the median = $X_{(n+1)/2}$. If n is even, then the median = $(X_{n/2} + X_{(n/2)+1})/2$ (i.e., the midpoint between the n/2 and n/2+1).

Method Detection Limit (MDL)
MDL is the minimum concentration of a substance that can be measured and reported with 99 percent confidence that the analyte concentration is greater than zero, as defined in in 40 C.F.R. part 136, Attachment B, revised as of July 3, 1999.

Minimum Level (ML)
ML is the concentration at which the entire analytical system must give a recognizable signal and acceptable calibration point. The ML is the concentration in a sample that is equivalent to the concentration of the lowest calibration standard analyzed by a specific analytical procedure, assuming that all the method specified sample weights, volumes, and processing steps have been followed.

Mixing Zone
Mixing Zone is a limited volume of receiving water that is allocated for mixing with a wastewater discharge where water quality criteria can be exceeded without causing adverse effects to the overall water body.

Not Detected (ND)
Sample results which are less than the laboratory's MDL.

Ocean Waters
The territorial marine waters of the State as defined by California law to the extent these waters are outside of enclosed bays, estuaries, and coastal lagoons. Discharges to ocean waters are regulated in accordance with the State Water Board's California Ocean Plan.

Persistent Pollutants
Persistent pollutants are substances for which degradation or decomposition in the environment is nonexistent or very slow.

Pollutant Minimization Program (PMP)
PMP means waste minimization and pollution prevention actions that include, but are not limited to, product substitution, waste stream recycling, alternative waste management methods, and education of the public and businesses. The goal of the PMP shall be to reduce all potential sources of a priority pollutant(s) through pollutant minimization (control) strategies, including pollution prevention measures as appropriate, to maintain the effluent concentration at or below the water quality-based effluent limitation. Pollution prevention measures may be particularly appropriate for persistent bioaccumulative priority pollutants where there is evidence that beneficial uses are being impacted. The Central Valley Water Board may consider cost effectiveness when establishing the requirements of a PMP. The completion and implementation of a Pollution Prevention Plan, if required pursuant to Water Code section 13263.3(d), shall be considered to fulfill the PMP requirements.

Pollution Prevention
Pollution Prevention means any action that causes a net reduction in the use or generation of a hazardous substance or other pollutant that is discharged into water and includes, but is not limited to, input change, operational improvement, production process change, and product reformulation (as defined in Water Code section 13263.3). Pollution prevention does not include actions that merely shift a pollutant in wastewater from one environmental medium to another environmental medium, unless clear environmental benefits of such an approach are identified to the satisfaction of the State Water Resources Control Board (State Water Board) or Central Valley Water Board.

Satellite Collection System
The portion, if any, of a sanitary sewer system owned or operated by a different public agency than the agency that owns and operates the wastewater treatment facility that a sanitary sewer system is tributary to.

Source of Drinking Water
Any water designated as municipal or domestic supply (MUN) in a Central Valley Water Board Basin Plan.

Standard Deviation (σ)
Standard Deviation is a measure of variability that is calculated as follows:

$$\sigma = (\sum[(x - \mu)^2]/(n - 1))^{0.5}$$

where:
x is the observed value;
μ is the arithmetic mean of the observed values; and
n is the number of samples.

Toxicity Reduction Evaluation (TRE)
TRE is a study conducted in a step-wise process designed to identify the causative agents of effluent or ambient toxicity, isolate the sources of toxicity, evaluate the effectiveness of toxicity control options, and then confirm the reduction in toxicity. The first steps of the TRE consist of the collection of data relevant to the toxicity, including additional toxicity testing, and an evaluation of facility operations and maintenance practices, and best management practices. A Toxicity Identification Evaluation (TIE) may be required as part of the TRE, if appropriate. (A TIE is a set of procedures to identify the specific chemical(s) responsible for toxicity. These procedures are performed in three phases (characterization, identification, and confirmation) using aquatic organism toxicity tests.)

ATTACHMENT B – MAP

United Auburn Indian Community

Thunder Valley Casino
Wastewater Treatment Plant

NPDES Permit No. CA0084697

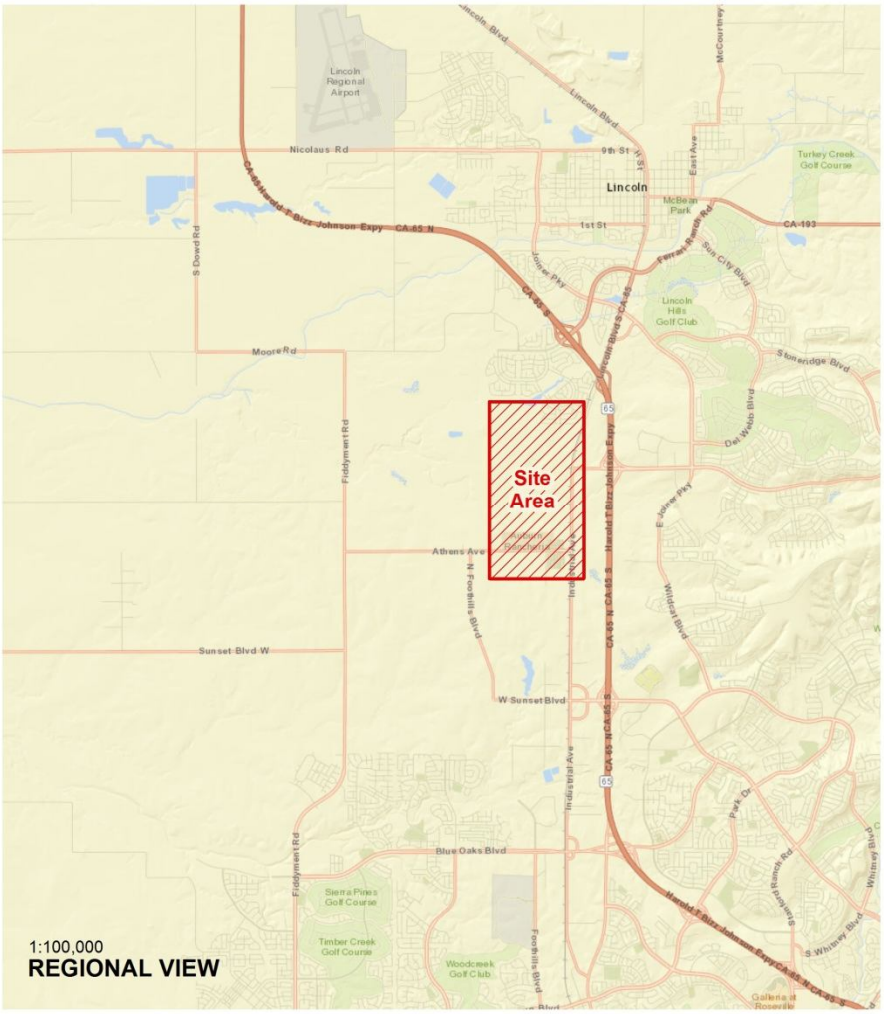

ATTACHMENT C – FLOW SCHEMATIC

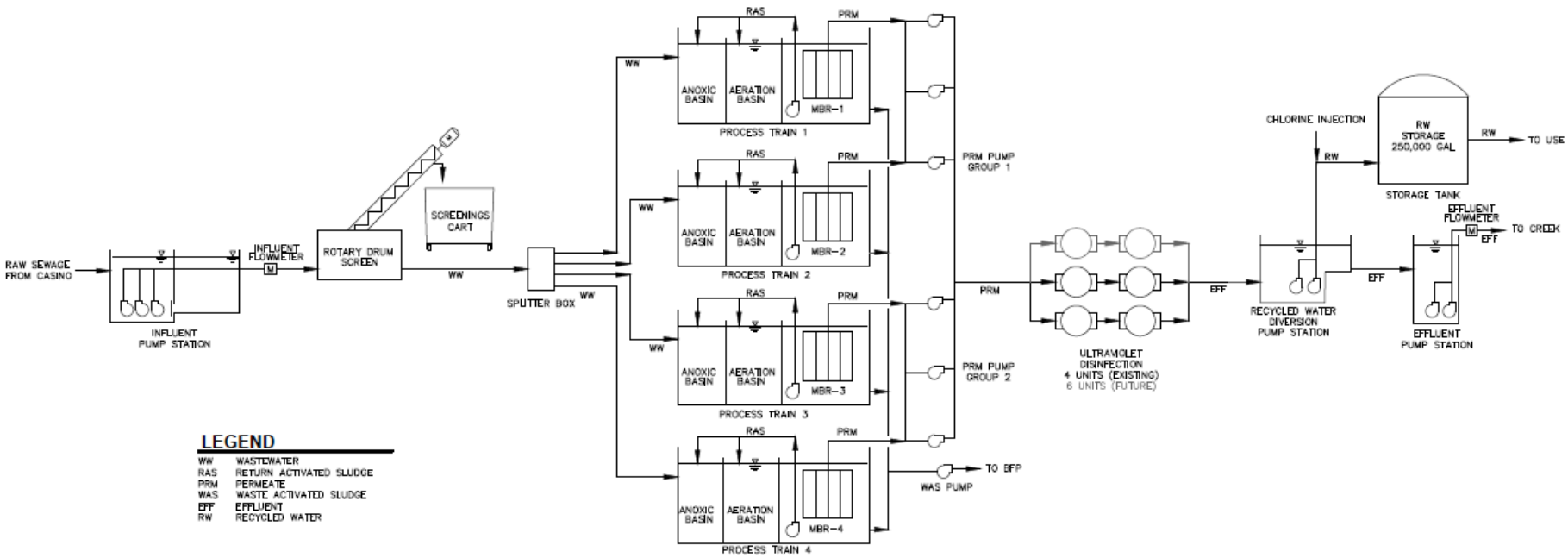

TENTATIVE ORDER

ATTACHMENT D – STANDARD PROVISIONS

I. STANDARD PROVISIONS – PERMIT COMPLIANCE

A. Duty to Comply

1. The Discharger must comply with all of the terms, requirements, and conditions of this Order. Any noncompliance constitutes a violation of the Clean Water Act (CWA) and the California Water Code and is grounds for enforcement action; permit termination, revocation and reissuance, or modification; denial of a permit renewal application; or a combination thereof. (40 C.F.R. § 122.41(a); Wat. Code, §§ 13261, 13263, 13265, 13268, 13000, 13001, 13304, 13350, 13385.)

2. The Discharger shall comply with effluent standards or prohibitions established under Section 307(a) of the CWA for toxic pollutants and with standards for sewage sludge use or disposal established under Section 405(d) of the CWA within the time provided in the regulations that establish these standards or prohibitions, even if this Order has not yet been modified to incorporate the requirement. (40 C.F.R. § 122.41(a)(1).)

B. Need to Halt or Reduce Activity Not a Defense

It shall not be a defense for a Discharger in an enforcement action that it would have been necessary to halt or reduce the permitted activity in order to maintain compliance with the conditions of this Order. (40 C.F.R. § 122.41(c).)

C. Duty to Mitigate

The Discharger shall take all reasonable steps to minimize or prevent any discharge or sludge use or disposal in violation of this Order that has a reasonable likelihood of adversely affecting human health or the environment. (40 C.F.R. § 122.41(d).)

D. Proper Operation and Maintenance

The Discharger shall at all times properly operate and maintain all facilities and systems of treatment and control (and related appurtenances) which are installed or used by the Discharger to achieve compliance with the conditions of this Order. Proper operation and maintenance also includes adequate laboratory controls and appropriate quality assurance procedures. This provision requires the operation of backup or auxiliary facilities or similar systems that are installed by a Discharger only when necessary to achieve compliance with the conditions of this Order. (40 C.F.R. § 122.41(e).)

E. Property Rights

1. This Order does not convey any property rights of any sort or any exclusive privileges. (40 C.F.R. § 122.41(g).)

2. The issuance of this Order does not authorize any injury to persons or property or invasion of other private rights, or any infringement of state or local law or regulations. (40 C.F.R. § 122.5(c).)

F. Inspection and Entry

The Discharger shall allow the Central Valley Water Board, State Water Board, U.S. EPA, and/or their authorized representatives (including an authorized contractor acting as their representative), upon the presentation of credentials and other documents, as may be required by law, to (33 U.S.C. § 1318(a)(4)(B); 40 C.F.R. § 122.41(i); Wat. Code, § 13267, 13383):

1. Enter upon the Discharger's premises where a regulated facility or activity is located or conducted, or where records are kept under the conditions of this Order (33 U.S.C § 1318(a)(4)(B)(ii); 40 C.F.R. § 122.41(i)(1); Wat. Code, §§ 13267, 13383);
2. Have access to and copy, at reasonable times, any records that must be kept under the conditions of this Order (33 U.S.C. § 1318(a)(4)(B)(ii); 40 C.F.R. § 122.41(i)(2); Wat. Code, §§ 13267, 13383);
3. Inspect and photograph, at reasonable times, any facilities, equipment (including monitoring and control equipment), practices, or operations regulated or required under this Order (33 U.S.C § 1318(a)(4)(B)(ii); 40 C.F.R. § 122.41(i)(3); Wat. Code, § 13267, 13383); and
4. Sample or monitor, at reasonable times, for the purposes of assuring Order compliance or as otherwise authorized by the CWA or the Water Code, any substances or parameters at any location. (33 U.S.C § 1318(a)(4)(B); 40 C.F.R. § 122.41(i)(4); Wat. Code, §§ 13267, 13383.)

G. Bypass

1. Definitions
   a. "Bypass" means the intentional diversion of waste streams from any portion of a treatment facility. (40 C.F.R. § 122.41(m)(1)(i).)
   b. "Severe property damage" means substantial physical damage to property, damage to the treatment facilities, which causes them to become inoperable, or substantial and permanent loss of natural resources that can reasonably be expected to occur in the absence of a bypass. Severe property damage does not mean economic loss caused by delays in production. (40 C.F.R. § 122.41(m)(1)(ii).)
2. Bypass not exceeding limitations. The Discharger may allow any bypass to occur which does not cause exceedances of effluent limitations, but only if it is for essential maintenance to assure efficient operation. These bypasses are not subject to the provisions listed in Standard Provisions – Permit Compliance I.G.3, I.G.4, and I.G.5 below. (40 C.F.R. § 122.41(m)(2).)
3. Prohibition of bypass. Bypass is prohibited, and the Central Valley Water Board may take enforcement action against a Discharger for bypass, unless (40 C.F.R. § 122.41(m)(4)(i)):
   a. Bypass was unavoidable to prevent loss of life, personal injury, or severe property damage (40 C.F.R. § 122.41(m)(4)(i)(A));
   b. There were no feasible alternatives to the bypass, such as the use of auxiliary treatment facilities, retention of untreated wastes, or maintenance during normal periods of equipment downtime. This condition is not satisfied if adequate back-up equipment should have been installed in the exercise of reasonable engineering judgment to prevent a bypass that occurred during normal periods of equipment downtime or preventive maintenance (40 C.F.R. § 122.41(m)(4)(i)(B)); and
   c. The Discharger submitted notice to the Central Valley Water Board as required under Standard Provisions – Permit Compliance I.G.5 below. (40 C.F.R. § 122.41(m)(4)(i)(C).)
4. The Central Valley Water Board may approve an anticipated bypass, after considering its adverse effects, if the Central Valley Water Board determines that it will meet the three conditions listed in Standard Provisions – Permit Compliance I.G.3 above. (40 C.F.R. § 122.41(m)(4)(ii).)

5. Notice

   a. Anticipated bypass. If the Discharger knows in advance of the need for a bypass, it shall submit a notice, if possible at least 10 days before the date of the bypass. (40 C.F.R. § 122.41(m)(3)(i).)

   b. Unanticipated bypass. The Discharger shall submit notice of an unanticipated bypass as required in Standard Provisions - Reporting V.E below (24-hour notice). (40 C.F.R. § 122.41(m)(3)(ii).)

H. Upset

Upset means an exceptional incident in which there is unintentional and temporary noncompliance with technology based permit effluent limitations because of factors beyond the reasonable control of the Discharger. An upset does not include noncompliance to the extent caused by operational error, improperly designed treatment facilities, inadequate treatment facilities, lack of preventive maintenance, or careless or improper operation. (40 C.F.R. § 122.41(n)(1).)

1. Effect of an upset. An upset constitutes an affirmative defense to an action brought for noncompliance with such technology based permit effluent limitations if the requirements of Standard Provisions – Permit Compliance I.H.2 below are met. No determination made during administrative review of claims that noncompliance was caused by upset, and before an action for noncompliance, is final administrative action subject to judicial review. (40 C.F.R. § 122.41(n)(2).)

2. Conditions necessary for a demonstration of upset. A Discharger who wishes to establish the affirmative defense of upset shall demonstrate, through properly signed, contemporaneous operating logs or other relevant evidence that (40 C.F.R. § 122.41(n)(3)):

   a. An upset occurred and that the Discharger can identify the cause(s) of the upset (40 C.F.R. § 122.41(n)(3)(i));

   b. The permitted facility was, at the time, being properly operated (40 C.F.R. § 122.41(n)(3)(ii));

   c. The Discharger submitted notice of the upset as required in Standard Provisions – Reporting V.E.2.b below (24-hour notice) (40 C.F.R. § 122.41(n)(3)(iii)); and

   d. The Discharger complied with any remedial measures required under Standard Provisions – Permit Compliance I.C above. (40 C.F.R. § 122.41(n)(3)(iv).)

3. Burden of proof. In any enforcement proceeding, the Discharger seeking to establish the occurrence of an upset has the burden of proof. (40 C.F.R. § 122.41(n)(4).)

II. STANDARD PROVISIONS – PERMIT ACTION

A. General

This Order may be modified, revoked and reissued, or terminated for cause. The filing of a request by the Discharger for modification, revocation and reissuance, or termination, or a notification of planned changes or anticipated noncompliance does not stay any Order condition. (40 C.F.R. § 122.41(f).)

B. Duty to Reapply

If the Discharger wishes to continue an activity regulated by this Order after the expiration date of this Order, the Discharger must apply for and obtain a new permit. (40 C.F.R. § 122.41(b).)

C. Transfers

This Order is not transferable to any person except after notice to the Central Valley Water Board. The Central Valley Water Board may require modification or revocation and reissuance of the Order to change the name of the Discharger and incorporate such other requirements as may be necessary under the CWA and the Water Code. (40 C.F.R. § 122.41(l)(3); 122.61.)

III. STANDARD PROVISIONS – MONITORING

A. Samples and measurements taken for the purpose of monitoring shall be representative of the monitored activity. (40 C.F.R. § 122.41(j)(1).)

B. Monitoring results must be conducted according to test procedures approved under 40 C.F.R. part 136 for the analyses of pollutants unless another method is required under 40 C.F.R. subchapters N or O. In the case of pollutants for which there are no approved methods under 40 C.F.R. part 136 or otherwise required under 40 C.F.R. subchapters N or O, monitoring must be conducted according to a test procedure specified in this Order for such pollutants. (40 C.F.R. § 122.41(j)(4); 122.44(i)(1)(iv).)

IV. STANDARD PROVISIONS – RECORDS

A. Except for records of monitoring information required by this Order related to the Discharger's sewage sludge use and disposal activities, which shall be retained for a period of at least five years (or longer as required by 40 C.F.R. part 503), the Discharger shall retain records of all monitoring information, including all calibration and maintenance records and all original strip chart recordings for continuous monitoring instrumentation, copies of all reports required by this Order, and records of all data used to complete the application for this Order, for a period of at least three (3) years from the date of the sample, measurement, report or application. This period may be extended by request of the Central Valley Water Board Executive Officer at any time. (40 C.F.R. § 122.41(j)(2).)

B. Records of monitoring information shall include:

1. The date, exact place, and time of sampling or measurements (40 C.F.R. § 122.41(j)(3)(i));
2. The individual(s) who performed the sampling or measurements (40 C.F.R. § 122.41(j)(3)(ii));
3. The date(s) analyses were performed (40 C.F.R. § 122.41(j)(3)(iii));
4. The individual(s) who performed the analyses (40 C.F.R. § 122.41(j)(3)(iv));
5. The analytical techniques or methods used (40 C.F.R. § 122.41(j)(3)(v)); and
6. The results of such analyses. (40 C.F.R. § 122.41(j)(3)(vi).)

C. Claims of confidentiality for the following information will be denied (40 C.F.R. § 122.7(b)):

1. The name and address of any permit applicant or Discharger (40 C.F.R. § 122.7(b)(1)); and
2. Permit applications and attachments, permits and effluent data. (40 C.F.R. § 122.7(b)(2).)

V. STANDARD PROVISIONS – REPORTING

A. Duty to Provide Information

The Discharger shall furnish to the Central Valley Water Board, State Water Board, or U.S. EPA within a reasonable time, any information which the Central Valley Water Board, State

Water Board, or U.S. EPA may request to determine whether cause exists for modifying, revoking and reissuing, or terminating this Order or to determine compliance with this Order. Upon request, the Discharger shall also furnish to the Central Valley Water Board, State Water Board, or U.S. EPA copies of records required to be kept by this Order. (40 C.F.R. § 122.41(h); Wat. Code, §§ 13267, 13383.)

B. Signatory and Certification Requirements

1. All applications, reports, or information submitted to the Central Valley Water Board, State Water Board, and/or U.S. EPA shall be signed and certified in accordance with Standard Provisions – Reporting V.B.2, V.B.3, V.B.4, and V.B.5 below. (40 C.F.R. § 122.41(k).)

2. All permit applications shall be signed by either a principal executive officer or ranking elected official. For purposes of this provision, a principal executive officer of a federal agency includes: (i) the chief executive officer of the agency, or (ii) a senior executive officer having responsibility for the overall operations of a principal geographic unit of the agency (e.g., Regional Administrators of U.S. EPA). (40 C.F.R. § 122.22(a)(3).).

3. All reports required by this Order and other information requested by the Central Valley Water Board, State Water Board, or U.S. EPA shall be signed by a person described in Standard Provisions – Reporting V.B.2 above, or by a duly authorized representative of that person. A person is a duly authorized representative only if:

   a. The authorization is made in writing by a person described in Standard Provisions – Reporting V.B.2 above (40 C.F.R. § 122.22(b)(1));

   b. The authorization specifies either an individual or a position having responsibility for the overall operation of the regulated facility or activity such as the position of plant manager, operator of a well or a well field, superintendent, position of equivalent responsibility, or an individual or position having overall responsibility for environmental matters for the company. (A duly authorized representative may thus be either a named individual or any individual occupying a named position.) (40 C.F.R. § 122.22(b)(2)); and

   c. The written authorization is submitted to the Central Valley Water Board and State Water Board. (40 C.F.R. § 122.22(b)(3).)

4. If an authorization under Standard Provisions – Reporting V.B.3 above is no longer accurate because a different individual or position has responsibility for the overall operation of the facility, a new authorization satisfying the requirements of Standard Provisions – Reporting V.B.3 above must be submitted to the Central Valley Water Board and State Water Board prior to or together with any reports, information, or applications, to be signed by an authorized representative. (40 C.F.R. § 122.22(c).)

5. Any person signing a document under Standard Provisions – Reporting V.B.2 or V.B.3 above shall make the following certification:

   "I certify under penalty of law that this document and all attachments were prepared under my direction or supervision in accordance with a system designed to assure that qualified personnel properly gather and evaluate the information submitted. Based on my inquiry of the person or persons who manage the system or those persons directly responsible for gathering the information, the information submitted is, to the best of my knowledge and belief, true, accurate, and complete. I am aware that there are significant penalties for submitting false information, including the possibility of fine and imprisonment for knowing violations." (40 C.F.R. § 122.22(d).)

C. Monitoring Reports

1. Monitoring results shall be reported at the intervals specified in the Monitoring and Reporting Program (Attachment E) in this Order. (40 C.F.R. § 122.41(l)(4).)
2. Monitoring results must be reported on a Discharge Monitoring Report (DMR) form or forms provided or specified by the Central Valley Water Board or State Water Board for reporting results of monitoring of sludge use or disposal practices. (40 C.F.R. § 122.41(l)(4)(i).)
3. If the Discharger monitors any pollutant more frequently than required by this Order using test procedures approved under 40 C.F.R. part 136, or another method required for an industry-specific waste stream under 40 C.F.R. subchapters N or O, the results of such monitoring shall be included in the calculation and reporting of the data submitted in the DMR or sludge reporting form specified by the Central Valley Water Board. (40 C.F.R. § 122.41(l)(4)(ii).)
4. Calculations for all limitations, which require averaging of measurements, shall utilize an arithmetic mean unless otherwise specified in this Order. (40 C.F.R. § 122.41(l)(4)(iii).)

D. Compliance Schedules

Reports of compliance or noncompliance with, or any progress reports on, interim and final requirements contained in any compliance schedule of this Order, shall be submitted no later than 14 days following each schedule date. (40 C.F.R. § 122.41(l)(5).)

E. Twenty-Four Hour Reporting

1. The Discharger shall report any noncompliance that may endanger health or the environment. Any information shall be provided orally within 24 hours from the time the Discharger becomes aware of the circumstances. A written submission shall also be provided within five (5) days of the time the Discharger becomes aware of the circumstances. The written submission shall contain a description of the noncompliance and its cause; the period of noncompliance, including exact dates and times, and if the noncompliance has not been corrected, the anticipated time it is expected to continue; and steps taken or planned to reduce, eliminate, and prevent reoccurrence of the noncompliance. (40 C.F.R. § 122.41(l)(6)(i).)
2. The following shall be included as information that must be reported within 24 hours under this paragraph (40 C.F.R. § 122.41(l)(6)(ii)):
   a. Any unanticipated bypass that exceeds any effluent limitation in this Order. (40 C.F.R. § 122.41(l)(6)(ii)(A).)
   b. Any upset that exceeds any effluent limitation in this Order. (40 C.F.R. § 122.41(l)(6)(ii)(B).)
3. The Central Valley Water Board may waive the above-required written report under this provision on a case-by-case basis if an oral report has been received within 24 hours. (40 C.F.R. § 122.41(l)(6)(iii).)

F. Planned Changes

The Discharger shall give notice to the Central Valley Water Board as soon as possible of any planned physical alterations or additions to the permitted facility. Notice is required under this provision only when (40 C.F.R. § 122.41(l)(1)):

1. The alteration or addition to a permitted facility may meet one of the criteria for determining whether a facility is a new source in section 122.29(b) (40 C.F.R. § 122.41(l)(1)(i)); or

2. The alteration or addition could significantly change the nature or increase the quantity of pollutants discharged. This notification applies to pollutants that are not subject to effluent limitations in this Order. (40 C.F.R. § 122.41(l)(1)(ii).)

3. The alteration or addition results in a significant change in the Discharger's sludge use or disposal practices, and such alteration, addition, or change may justify the application of permit conditions that are different from or absent in the existing permit, including notification of additional use or disposal sites not reported during the permit application process or not reported pursuant to an approved land application plan. (40 C.F.R.§ 122.41(l)(1)(iii).)

G. Anticipated Noncompliance

The Discharger shall give advance notice to the Central Valley Water Board or State Water Board of any planned changes in the permitted facility or activity that may result in noncompliance with this Order's requirements. (40 C.F.R. § 122.41(l)(2).)

H. Other Noncompliance

The Discharger shall report all instances of noncompliance not reported under Standard Provisions – Reporting V.C, V.D, and V.E above at the time monitoring reports are submitted. The reports shall contain the information listed in Standard Provision – Reporting V.E above. (40 C.F.R. § 122.41(l)(7).)

I. Other Information

When the Discharger becomes aware that it failed to submit any relevant facts in a permit application, or submitted incorrect information in a permit application or in any report to the Central Valley Water Board**,** State Water Board, or U.S. EPA, the Discharger shall promptly submit such facts or information. (40 C.F.R. § 122.41(l)(8).)

VI. STANDARD PROVISIONS – ENFORCEMENT

A. The Central Valley Water Board is authorized to enforce the terms of this permit under several provisions of the Water Code, including, but not limited to, sections 13385, 13386, and 13387.

VII. ADDITIONAL PROVISIONS – NOTIFICATION LEVELS

A. Publicly-Owned Treatment Works (POTW's)

All POTW's shall provide adequate notice to the Central Valley Water Board of the following (40 C.F.R. § 122.42(b)):

1. Any new introduction of pollutants into the POTW from an indirect discharger that would be subject to sections 301 or 306 of the CWA if it were directly discharging those pollutants (40 C.F.R. § 122.42(b)(1)); and

2. Any substantial change in the volume or character of pollutants being introduced into that POTW by a source introducing pollutants into the POTW at the time of adoption of the Order. (40 C.F.R. § 122.42(b)(2).)

3. Adequate notice shall include information on the quality and quantity of effluent introduced into the POTW as well as any anticipated impact of the change on the quantity or quality of effluent to be discharged from the POTW. (40 C.F.R. § 122.42(b)(3).)

ATTACHMENT E – MONITORING AND REPORTING PROGRAM

Contents

I. General Monitoring Provisions E-2
II. Monitoring Locations E-3
III. Influent Monitoring Requirements E-4
A. Monitoring Location INF-001 ..... E-4
IV. Effluent Monitoring Requirements E-4
A. Monitoring Location EFF-001 ..... E-4
V. Whole Effluent Toxicity Testing Requirements E-5
VI. Land Discharge Monitoring Requirements – Not Applicable E-8
VII. Recycling Monitoring Requirements – Not Applicable E-8
VIII. Receiving Water Monitoring Requirements E-8
A. Monitoring Locations RSW-001 and RSW-002 ..... E-9
IX. Other Monitoring Requirements E-10
A. Biosolids E-10
B. Municipal Water Supply E-11
C. Filtration System and Ultraviolet Light (UV) Disinfection System E-11
D. Effluent and Receiving Water Characterization E-12
X. Reporting Requirements E-16
A. General Monitoring and Reporting Requirements E-16
B. Self-Monitoring Reports (SMR's) E-16
C. Discharge Monitoring Reports (DMR's) – Not Applicable E-19
D. Other Reports E-19

Tables

Table E-1. Monitoring Station Locations E-3
Table E-2. Influent Monitoring E-4
Table E-3. Effluent Monitoring E-4
Table E-4. Chronic Toxicity Testing Dilution Series E-6
Table E-5. Receiving Water Monitoring Requirements E-9
Table E-6. Municipal Water Supply Monitoring Requirements E-11
Table E-7. Filtration System and UV Disinfection System Monitoring Requirements E-11
Table E-8. Effluent and Receiving Water Characterization Monitoring E-12
Table E-9. Monitoring Periods and Reporting Schedule E-17

ATTACHMENT E – MONITORING AND REPORTING PROGRAM (MRP)

The Code of Federal Regulations (40 C.F.R. § 122.48) requires that all NPDES permits specify monitoring and reporting requirements. Water Code sections 13267 and 13383 also authorize the Central Valley Water Board to require technical and monitoring reports. This MRP establishes monitoring and reporting requirements that implement federal and California regulations.

I. GENERAL MONITORING PROVISIONS

A. Samples and measurements taken as required herein shall be representative of the volume and nature of the monitored discharge. All samples shall be taken at the monitoring locations specified below and, unless otherwise specified, before the monitored flow joins or is diluted by any other waste stream, body of water, or substance. Monitoring locations shall not be changed without notification to and the approval of the Central Valley Water Board.

B. Effluent samples shall be taken downstream of the last addition of wastes to the treatment or discharge works where a representative sample may be obtained prior to mixing with the receiving waters. Samples shall be collected at such a point and in such a manner to ensure a representative sample of the discharge.

C. Chemical, bacteriological, and bioassay analyses of any material required by this Order shall be conducted by a laboratory certified for such analyses by the State Water Resources Control Board (State Water Board), Division of Drinking Water (DDW; formerly the Department of Public Health). Laboratories that perform sample analyses must be identified in all monitoring reports submitted to the Central Valley Water Board. In the event a certified laboratory is not available to the Discharger for any onsite field measurements such as pH, dissolved oxygen (DO), turbidity, temperature, and residual chlorine, such analyses performed by a noncertified laboratory will be accepted provided a Quality Assurance-Quality Control Program is instituted by the laboratory. A manual containing the steps followed in this program for any onsite field measurements such as pH, DO, turbidity, temperature, and residual chlorine must be kept onsite in the treatment facility laboratory and shall be available for inspection by Central Valley Water Board staff. The Discharger must demonstrate sufficient capability (qualified and trained employees, properly calibrated and maintained field instruments, etc.) to adequately perform these field measurements. The Quality Assurance-Quality Control Program must conform to U.S. EPA guidelines or to procedures approved by the Central Valley Water Board.

D. Appropriate flow measurement devices and methods consistent with accepted scientific practices shall be selected and used to ensure the accuracy and reliability of measurements of the volume of monitored discharges. All monitoring instruments and devices used by the Discharger to fulfill the prescribed monitoring program shall be properly maintained and calibrated as necessary, at least yearly, to ensure their continued accuracy. All flow measurement devices shall be calibrated at least once per year to ensure continued accuracy of the devices.

E. Monitoring results, including noncompliance, shall be reported at intervals and in a manner specified in this Monitoring and Reporting Program.

F. Laboratories analyzing monitoring samples shall be certified by DDW, in accordance with the provision of Water Code section 13176, and must include quality assurance/quality control data with their reports.

G. The Discharger shall file with the Central Valley Water Board technical reports on self-monitoring performed according to the detailed specifications contained in this Monitoring and Reporting Program.

H. The results of all monitoring required by this Order shall be reported to the Central Valley Water Board, and shall be submitted in such a format as to allow direct comparison with the limitations and requirements of this Order. Unless otherwise specified, discharge flows shall be reported in terms of the monthly average and the daily maximum discharge flows.

II. MONITORING LOCATIONS

The Discharger shall establish the following monitoring locations to demonstrate compliance with the effluent limitations, discharge specifications, and other requirements in this Order:

Table E-1. Monitoring Station Locations

Discharge Point Name	Monitoring Location Name	Monitoring Location Description
--	INF-001	A location where a representative sample of the Facility influent can be obtained, prior to any additives, treatment processes, and plant return flows.
001	EFF-001	A location where a representative sample of the Facility effluent can be obtained prior to discharge to the receiving water. Grab samples are obtained from the sample port located just downstream of the ultraviolet light (UV) disinfection system. Composite samples are obtained downstream of the grab sample location prior to discharge into the recycled water diversion wet well. Latitude: 38° 50’ 44” N Longitude: 121° 19’ 01” W
--	RSW-001	In Orchard Creek, 50 feet upstream from Discharge Point 001.
--	RSW-002	In Orchard Creek, 200 feet downstream from Discharge Point 001.
--	BIO-001	A location where a representative sample of the biosolids can be obtained.
--	SPL-001	A location where a representative sample of the municipal water can be obtained.
--	FIL-001	Monitoring of the filter effluent to be measured immediately downstream of the filters prior to the UV disinfection system.
--	UVS-001	A location where a representative sample of wastewater can be collected immediately upstream of the UV disinfection system.

The North latitude and West longitude information in Table E-1 are approximate for administrative purposes.

III. INFLUENT MONITORING REQUIREMENTS

A. Monitoring Location INF-001

1. The Discharger shall monitor influent to the Facility at Monitoring Location INF-001 as follows:

Table E-2. Influent Monitoring

Parameter	Units	Sample Type	Minimum Sampling Frequency	Required Analytical Test Method
Flow	MGD	Meter	Continuous	--
Conventional Pollutants				
Biochemical Oxygen Demand (5-day @ 20°C)	mg/L	24-hr Composite[1]	1/Week	[2]
Total Suspended Solids	mg/L	24-hr Composite[1]	1/Week	[2]

[1] 24-hour flow proportional composite.
[2] Pollutants shall be analyzed using the analytical methods described in 40 C.F.R. part 136; or by methods approved by the Central Valley Water Board or the State Water Board.

IV. EFFLUENT MONITORING REQUIREMENTS

A. Monitoring Location EFF-001

1. The Discharger shall monitor tertiary treated effluent at Monitoring Location EFF-001 as follows when discharges to Orchard Creek at Discharge Point 001 occur. If more than one analytical test method is listed for a given parameter, the Discharger must select from the listed methods and corresponding Minimum Level:

Table E-3. Effluent Monitoring

Parameter	Units	Sample Type	Minimum Sampling Frequency	Required Analytical Test Method
Flow	MGD	Meter	Continuous	--
Conventional Pollutants				
Biochemical Oxygen Demand (5-day @ 20° C)	mg/L	24-hr Composite[1]	1/Week	[2]
	lbs/day	Calculate	1/Week	--
pH	standard units	Grab	1/Day[3, 4]	[2]
Total Suspended Solids	mg/L	24-hr Composite[1]	1/Week	[2]
	lbs/day	Calculate	1/Week	--
Priority Pollutants				
Mercury, Total Recoverable	µg/L	Grab	1/Quarter	[2,5,6]
Zinc, Total Recoverable	µg/L	Grab	1/Quarter	[2,5,10]
Priority Pollutants and Other Constituents of Concern	See Section IX.D	See Section IX.D	See Section IX.D	[2,5]
Non-Conventional Pollutants				
Ammonia Nitrogen, Total (as N)	mg/L	Grab	1/Week[3, 7]	[2]
	lbs/day	Calculate	1/Week	--
Electrical Conductivity @ 25°C	µmhos/cm	Grab	1/Week	[2]
Hardness, Total (as $CaCO_3$)	mg/L	Grab	1/Month	[2]

Parameter	Units	Sample Type	Minimum Sampling Frequency	Required Analytical Test Method
Nitrate Nitrogen, Total (as N)	mg/L	Grab	1/Month[8]	[2]
Nitrite Nitrogen, Total (as N)	mg/L	Grab	1/Month[8]	[2]
Nitrate plus Nitrite Nitrogen, Total (as N)	mg/L	Calculate	1/Month	--
Temperature	°C	Grab	1/Day[3, 4]	[2]
Total Coliform Organisms	MPN/100 mL	Grab	3/Week[9]	[2]
Total Dissolved Solids	mg/L	Grab	1/Month	[2]

[1] 24-hour flow proportional composite.
[2] Pollutants shall be analyzed using the analytical methods described in 40 C.F.R. Part 136 or by methods approved by the Central Valley Water Board or the State Water Board.
[3] pH and temperature shall be recorded at the time of ammonia sample collection.
[4] A hand-held field meter may be used, provided the meter utilizes a U.S. EPA-approved algorithm/method and is calibrated and maintained in accordance with the manufacturer's instructions. A calibration and maintenance log for each meter used for monitoring required by this Monitoring and Reporting Program shall be maintained at the Facility.
[5] For priority pollutant constituents the reporting level shall be consistent with Sections 2.4.2 and 2.4.3 of the *Policy for Implementation of Toxics Standards for Inland Surface Waters, Enclosed Bays, and Estuaries of California* (See Attachment E, Table E-8).
[6] Unfiltered methyl mercury and total mercury samples shall be taken using clean hands/dirty hands procedures, as described in U.S. EPA method 1669: Sampling Ambient Water for Trace Metals at EPA Water Quality Criteria Levels, for collection of equipment blanks (section 9.4.4.2), and shall be analyzed by U.S. EPA method 1630/1631 (Revision E) with a reporting limit of 0.05 ng/L for methyl mercury and 0.5 ng/L for total mercury.
[7] Concurrent with whole effluent toxicity monitoring.
[8] Monitoring for nitrite and nitrate shall be conducted concurrently.
[9] Samples for total coliform organisms may be collected at any point following disinfection.
[10] Zinc shall be monitored quarterly. The Discharger may stop monitoring after two years upon Executive Officer's approval if there is no significant increase of the average zinc concentration.

V. WHOLE EFFLUENT TOXICITY TESTING REQUIREMENTS

A. Acute Toxicity Testing. The Discharger shall conduct acute toxicity testing to determine whether the effluent is contributing acute toxicity to the receiving water. The Discharger shall meet the following acute toxicity testing requirements:

1. *Monitoring Frequency* – The Discharger shall perform annual acute toxicity testing, concurrent with effluent ammonia sampling.
2. *Sample Types* – The Discharger may use flow-through or static renewal testing. For static renewal testing, the samples shall be grab samples and shall be representative of the volume and quality of the discharge. The effluent samples shall be taken at Monitoring Location EFF-001.
3. *Test Species* – Test species shall be fathead minnows (*Pimephales promelas*).
4. *Methods* – The acute toxicity testing samples shall be analyzed using EPA-821-R-02-012, Fifth Edition. Temperature, total residual chlorine, and pH shall be recorded at the time of sample collection. No pH adjustment may be made unless approved by the Executive Officer.

5. *Test Failure* – If an acute toxicity test does not meet all test acceptability criteria, as specified in the test method, the Discharger must re-sample and re-test as soon as possible, not to exceed 7 days following notification of test failure.

B. Chronic Toxicity Testing. The Discharger shall conduct three species chronic toxicity testing to determine whether the effluent is contributing chronic toxicity to the receiving water. The Discharger is not required to conduct this chronic toxicity testing when the Facility is engaged in a TIE/TRE, or toxicity evaluation study. The Discharger shall meet the following chronic toxicity testing requirements:

1. *Monitoring Frequency –* The Discharger shall perform quarterly three species chronic toxicity testing.

2. *Sample Types* – Effluent samples shall be flow proportional 24-hour composites and shall be representative of the volume and quality of the discharge. The effluent samples shall be taken at Monitoring Location EFF-001. The receiving water control shall be a grab sample obtained from Monitoring Location RSW-001, as identified in this Monitoring and Reporting Program.

3. *Sample Volumes* – Adequate sample volumes shall be collected to provide renewal water to complete the test in the event that the discharge is intermittent.

4. *Test Species* – Chronic toxicity testing measures sublethal (e.g., reduced growth, reproduction) and/or lethal effects to test organisms exposed to an effluent compared to that of the control organisms. The Discharger shall conduct chronic toxicity tests with:

   a. The cladoceran, water flea, *Ceriodaphnia dubia* (survival and reproduction test);

   b. The fathead minnow, *Pimephales promelas* (larval survival and growth test); and

   c. The green alga, *Selenastrum capricornutum* (growth test).

   The Discharger may use *Ceriodaphnia dubia* that have been acclimated to softer water to better simulate conditions in the receiving water. If the Discharger uses acclimated test species, the Discharger shall report the hardness with which the organisms are acclimated in the SMR.

5. Methods – The presence of chronic toxicity shall be estimated as specified in *Short-term Methods for Estimating the Chronic Toxicity of Effluents and Receiving Waters to Freshwater Organisms, Fourth Edition*, EPA/821-R-02-013, October 2002.

   The Discharger may adjust the hardness of the laboratory control water and the effluent sample to reflect the hardness of the receiving water. If the Discharger chooses to do so, the Discharger shall discuss the adjustment and report the associated hardness of the water in the SMR.

6. Reference Toxicant – As required by the SIP, all chronic toxicity tests shall be conducted with concurrent testing with a reference toxicant and shall be reported with the chronic toxicity test results.

7. *Dilutions* – For routine and accelerated chronic toxicity monitoring, it is not necessary to perform the test using a dilution series. The test may be performed using 100% effluent and one control. For TRE monitoring, the chronic toxicity testing shall be performed using the dilution series identified in Table E-4, below, unless an alternative dilution series is detailed in the submitted TRE Action Plan. A receiving water control or laboratory water control may be used as the diluent.

Table E-4. Chronic Toxicity Testing Dilution Series

Sample	Dilutions[1] (%)					Control
	100	75	50	25	12.5	
% Effluent	100	75	50	25	12.5	0
% Control Water	0	25	50	75	87.5	100

[1]Receiving water control or laboratory water control may be used as the diluent.

8. *Test Failure* – The Discharger must re-sample and re-test as soon as possible, but no later than fourteen (14) days after receiving notification of a test failure. A test failure is defined as follows:

   a. The reference toxicant test or the effluent test does not meet all test acceptability criteria as specified in the *Short-term Methods for Estimating the Chronic Toxicity of Effluents and Receiving Waters to Freshwater Organisms, Fourth Edition*, EPA/821-R-02-013, October 2002 (Method Manual), and its subsequent amendments or revisions; or

   b. The percent minimum significant difference (PMSD) measured for the test exceeds the upper PMSD bound variability criterion in Table 6 on page 52 of the Method Manual. (A retest is only required in this case if the test results do not exceed the monitoring trigger specified in the Special Provision at section VI.C.2.a.iii. of the Order).

C. WET Testing Notification Requirements. The Discharger shall notify the Central Valley Water Board within 24-hours after the receipt of test results exceeding the monitoring trigger during regular or accelerated monitoring, or an exceedance of the acute toxicity effluent limitation.

D. WET Testing Reporting Requirements. All toxicity test reports shall include the contracting laboratory's complete report provided to the Discharger and shall be in accordance with the appropriate "*Report Preparation and Test Review*" sections of the method manuals. At a minimum, whole effluent toxicity monitoring shall be reported as follows:

1. **Chronic WET Reporting.** Regular chronic toxicity monitoring results shall be reported to the Central Valley Water Board within 30 days following completion of the test, and shall contain, at minimum:

   a. The results expressed in TUc, measured as 100/NOEC, and also measured as 100/LC50, 100/EC25, 100/IC25, and 100/IC50, as appropriate.

   b. The statistical methods used to calculate endpoints;

   c. The statistical output page, which includes the calculation of the percent minimum significant difference (PMSD);

   d. The dates of sample collection and initiation of each toxicity test; and

   e. The results compared to the numeric toxicity monitoring trigger.

   Additionally, the monthly self-monitoring reports shall contain an updated chronology of chronic toxicity test results expressed in TUc, and organized by test species, type of test (survival, growth or reproduction), and monitoring frequency, i.e., either quarterly, monthly, accelerated, or Toxicity Reduction Evaluation (TRE).

2. **Acute WET Reporting.** Acute toxicity test results shall be submitted with the monthly discharger self-monitoring reports and reported as percent survival.

3. **TRE or Toxicity Evaluation Study Reporting.** Reports for TREs or toxicity evaluation study shall be submitted in accordance with the schedule contained in the Discharger's approved TRE Workplan, or as amended by the Discharger's TRE Action Plan.

4. **Quality Assurance (QA).** The Discharger must provide the following information for QA purposes:

   a. Results of the applicable reference toxicant data with the statistical output page giving the species, NOEC, LOEC, type of toxicant, dilution water used, concentrations used, PMSD, and dates tested.

   b. The reference toxicant control charts for each endpoint, which include summaries of reference toxicant tests performed by the contracting laboratory.

   c. Any information on deviations or problems encountered and how they were dealt with.

VI. LAND DISCHARGE MONITORING REQUIREMENTS – NOT APPLICABLE

VII. RECYCLING MONITORING REQUIREMENTS – NOT APPLICABLE

VIII. RECEIVING WATER MONITORING REQUIREMENTS

The Discharger shall implement the Receiving Water Monitoring Requirements in Attachment E, Sections VIII.A.1 and VIII.A.2 of this Order. However, in lieu of conducting the individual monitoring specified in Attachment E, Sections VIII.A.1 and VIII.A.2 of this Order (including visual observations) the Discharger may elect to participate in the Delta Regional Monitoring Program. However, if the Discharger elects to participate in the Delta Regional Monitoring Program, the Discharger shall continue to conduct upstream and downstream monitoring for hardness, pH, and temperature monthly at Monitoring Locations RSW-001 and RSW-002. The Discharger may choose to conduct all or part of the receiving water monitoring through the Delta Regional Monitoring Program. If the Discharger elects to cease all or part of the individual receiving water monitoring and instead participates in the Delta Regional Monitoring Program, the Discharger shall submit a letter signed by an authorized representative informing the Board that the Discharger will participate in the Delta Regional Monitoring Program, and the date on which individual receiving water monitoring required under Attachment E, Sections VIII.A.1 and VIII.A.2 will cease, or be modified, and specific monitoring locations and constituent combinations that will no longer be conducted individually. Written approval of the Discharger's request, by the Executive Officer, is required prior to discontinuing part or all of individual receiving water monitoring. Approval by the Executive Officer is not required prior to participating in the Delta Regional Monitoring Program.

If the Discharger participates in the Delta Regional Monitoring Program in lieu of conducting individual receiving water monitoring, the Discharger shall continue to participate in the Delta Regional Monitoring Program until such time as the Discharger informs the Board that participation in the Delta Regional Monitoring Program will cease and individual monitoring is reinstituted. Receiving water monitoring under Attachment E, Sections VIII.A.1 and VIII.A.2 is not required under this Order so long as the Discharger adequately supports the Delta Regional Monitoring Program. If the Discharger fails to adequately support the Delta Regional Monitoring Program, as defined by the Delta Regional Monitoring Program Steering Committee, the Discharger shall reinstitute individual receiving water monitoring under Attachment E, Sections VIII.A.1 and VIII.A.2 upon written notice from the Executive Officer. During participation in the Delta Regional Monitoring Program, the Discharger may conduct and submit any or part of the receiving water monitoring included in this Monitoring and Reporting Program that is deemed appropriate by the Discharger.

Delta Regional Monitoring Program data is not intended to be used directly to represent either upstream or downstream water quality for purposes of determining compliance with this Permit.

Delta Regional Monitoring Program monitoring stations are established generally as "integrator sites" to evaluate the combined impacts on water quality of multiple discharges into the Delta; Delta Regional Monitoring Program monitoring stations would not normally be able to identify the source of any specific constituent, but would be used to identify water quality issues needing further evaluation. Delta Regional Monitoring Program monitoring data, along with individual Discharger data, may be used to help establish background receiving water quality for reasonable potential analyses in an NPDES permit after evaluation of the applicability of the data for that purpose. Delta Regional Monitoring Program data, as with all environmental monitoring data, can provide an assessment of water quality at a specific place and time that can be used in conjunction with other information, such as other receiving water monitoring data, spatial and temporal distribution and trends of receiving water data, effluent data from the Discharger's discharge and other point and non-point source discharges, receiving water flow volume, speed and direction, and other information to determine the likely source or sources of a constituent that resulted in exceedance of a receiving water quality objective.

During the period of participation in the Delta Regional Monitoring Program, the Discharger shall continue to report any individually conducted receiving water monitoring data in the Electronic Self-Monitoring Reports (eSMR) according to the Monitoring and Reporting Program. In addition, 1) with each submitted eSMR, the Discharger's eSMR cover letter shall state that the Discharger is participating in the Delta Regional Monitoring Program in lieu of conducting the individual receiving water monitoring program required by the permit, and 2) with each annual report, the Discharger shall attach a copy of the letter originally submitted to the Central Valley Water Board describing the monitoring location(s) and constituent combinations that will no longer be conducted individually.

A. Monitoring Locations RSW-001 and RSW-002

1. The Discharger shall monitor Orchard Creek at Monitoring Locations RSW-001 and RSW-002 as follows when discharges to Orchard Creek at Discharge Point 001 occur:

Table E-5. Receiving Water Monitoring Requirements

Parameter	Units	Sample Type	Minimum Sampling Frequency	Required Analytical Test Method
Conventional Pollutants				
pH	standard units	Grab	1/Week[1]	[2]
Priority Pollutants				
Priority Pollutants and Other Constituents of Concern	See Section IX.D	See Section IX.D	See Section IX.D[3]	[2,4]
Non-Conventional Pollutants				
Ammonia Nitrogen, Total (as N)	mg/L	Grab	1/Quarter	[2]
Dissolved Oxygen	mg/L	Grab	1/Week	[2]
Electrical Conductivity @ 25°C	µmhos/ cm	Grab	1/Week	[2]
Hardness, Total (as $CaCO_3$)	mg/L	Grab	1/Month[1]	[2]
Temperature	°C	Grab	1/Week[1]	[2]
Turbidity	NTU	Grab	1/Week	[2]

[1] If the Discharger elects to participate in the Delta Regional Monitoring Program, the Discharger shall conduct upstream and downstream monitoring for hardness, pH, and temperature monthly at Monitoring Locations RSW-001 and RSW-002.

[2] Pollutants shall be analyzed using the analytical methods described in 40 C.F.R. part 136 or by methods approved by the Central Valley Water Board or the State Water Board.

[3] Monitoring for priority pollutants and other constituents of concern shall be conducted at Monitoring Location

Parameter	Units	Sample Type	Minimum Sampling Frequency	Required Analytical Test Method

RSW-001 only.

[4] For priority pollutant constituents the reporting level shall be consistent with Sections 2.4.2 and 2.4.3 of the *Policy for Implementation of Toxics Standards for Inland Surface Waters, Enclosed Bays, and Estuaries of California* (See Attachment E, section IX.D).

2. In conducting the receiving water monitoring, a log shall be kept of the receiving water conditions throughout the reach bounded by Monitoring Locations RSW-001 and RSW-002. Attention shall be given to the presence or absence of:

   a. Floating or suspended matter;
   b. Discoloration;
   c. Bottom deposits;
   d. Aquatic life;
   e. Visible films, sheens, or coatings;
   f. Fungi, slimes, or objectionable growths; and
   g. Potential nuisance conditions.

   Notes on receiving water conditions shall be summarized in the monitoring report.

IX. OTHER MONITORING REQUIREMENTS

A. Biosolids

1. Monitoring Location BIO-001

a. A composite sample of sludge shall be collected annually at Monitoring Location BIO-001 in accordance with EPA's *POTW Sludge Sampling and Analysis Guidance Document*, August 1989, and tested for the metals listed in Title 22.

b. Biosolids monitoring shall be conducted using the methods in Test Methods for Evaluating Solid Waste, Physical/Chemical methods (EPA publication SW-846), as required in 40 C.F.R. section 503.8(b)(4). All results must be reported on a 100% dry weight basis. Records of all analyses must state on each page of the laboratory report whether the results are expressed in “100% dry weight” or “as is.”

c. Sampling records shall be retained for a minimum of **5 years**. A log shall be maintained of sludge quantities generated and of handling and disposal activities. The frequency of entries is discretionary; however, the log must be complete enough to serve as a basis for part of the annual report.

B. Municipal Water Supply

1. Monitoring Location SPL-001

a. The Discharger shall monitor the municipal water supply at Monitoring Location SPL-001 as follows.

Table E-6. Municipal Water Supply Monitoring Requirements

Parameter	Units	Sample Type	Minimum Sampling Frequency	Required Analytical Test Method
Total Dissolved Solids[1]	mg/L	Grab	1/Quarter	[2]
Electrical Conductivity @ 25°C[1]	µmhos/cm	Grab	1/Quarter	[2]
Hardness, Total (as $CaCO_3$)	mg/L	Grab	1/Quarter	[2]

[1] If the water supply is from more than one source, the total dissolved solids and electrical conductivity shall be reported as a weighted average and include copies of supporting calculations.

[2] Pollutants shall be analyzed using the analytical methods described in 40 C.F.R. part 136 or by methods approved by the Central Valley Water Board or the State Water Board.

C. Filtration System and Ultraviolet Light (UV) Disinfection System

1. Monitoring Locations FIL-001 and UVS-001

a. The Discharger shall monitor the filtration system at Monitoring Location FIL-001 and the UV disinfection system at Monitoring Location UVS-001 as follows when discharges to Orchard Creek at Discharge Point 001 occur:

Table E-7. Filtration System and UV Disinfection System Monitoring Requirements

Parameter	Units	Sample Type	Monitoring Location	Minimum Sampling Frequency
Flow	MGD	Meter	UVS-001	Continuous[1]
Turbidity	NTU	Meter	FIL-001	Continuous[1,2]
Number of UV banks in operation	Number	Observation	N/A	Continuous[1]
UV Transmittance	Percent (%)	Meter	UVS-001	Continuous[1]
UV Dose[3]	mJ/cm [2]	Calculated	N/A	Continuous[1]

[1] For continuous analyzers, the Discharger shall report documented routine meter maintenance activities including date, time of day, and duration, in which the analyzer(s) is not in operation. If analyzer(s) fail to provide continuous monitoring for more than two hours and influent and/or effluent from the disinfection process is not diverted for retreatment, the Discharger shall obtain and report hourly manual and/or grab sample results. The Discharger shall not decrease power settings or reduce the number of UV lamp banks in operation while the continuous analyzers are out of service and water is being disinfected.

[2] Report daily average and maximum turbidity.

[3] Report daily minimum hourly average UV dose and daily average UV dose. The minimum hourly average dose shall consist of lowest hourly average dose provided in any channel that had at least one bank of lamps operating during the hour interval. For channels that did not operate for the entire hour interval, the dose will be averaged based on the actual operation time.

D. Effluent and Receiving Water Characterization

If the Discharger is participating in the Delta Regional Monitoring Program as described in Attachment E, Section VIII, the receiving water portion of this Characterization Monitoring is not required. However, the Report of Waste Discharge for the next permit renewal shall include, at minimum, one representative ambient background characterization monitoring event for priority pollutant constituents[1] during the term of the permit. Data from the Delta Regional Monitoring Program may be utilized to characterize the receiving water in the permit renewal. The Discharger may request that the Regional Monitoring Program perform sampling and laboratory analysis to address all or a portion of the monitoring under this Characterization Monitoring with the understanding that the Discharger will provide funding to the Regional Monitoring Program sufficient to reimburse all of the costs of this additional effort. Alternatively, the Discharger may conduct any site-specific receiving water monitoring deemed appropriate by the Discharger and submit that monitoring data with this Characterization Monitoring. In general, monitoring data from samples collected in the immediate vicinity of the discharge will be given greater weight in permitting decisions than receiving water monitoring data collected at greater distances from the discharge point.

1. **Quarterly Monitoring.** Quarterly samples shall be collected from the effluent and upstream receiving water (Monitoring Locations EFF-001 and RSW-001) and analyzed for the constituents listed in Table E-8, below. Quarterly monitoring shall be conducted during 2018 (4 consecutive samples, evenly distributed throughout the year) and the results of such monitoring be submitted to the Central Valley Water Board with the monthly self-monitoring reports. Each individual monitoring event shall provide representative sample results for the effluent and upstream receiving water.
2. **Concurrent Sampling.** Effluent and receiving water sampling shall be performed at approximately the same time, on the same date.
3. **Sample Type.** All receiving water samples shall be taken as grab samples. Effluent samples shall be taken as described in Table E-8, below.

Table E-8. Effluent and Receiving Water Characterization Monitoring

Parameter	Units	Effluent Sample Type	Maximum Reporting Level[1]
2- Chloroethyl vinyl ether	µg/L	Grab	1
Acrolein	µg/L	Grab	2
Acrylonitrile	µg/L	Grab	2
Benzene	µg/L	Grab	0.5
Bromoform	µg/L	Grab	0.5
Carbon Tetrachloride	µg/L	Grab	0.5
Chlorobenzene	µg/L	Grab	0.5
Chloroethane	µg/L	Grab	0.5
Chloroform	µg/L	Grab	2
Chloromethane	µg/L	Grab	2
Dibromochloromethane	µg/L	Grab	0.5
Dichlorobromomethane	µg/L	Grab	0.5
Dichloromethane	µg/L	Grab	2
Ethylbenzene	µg/L	Grab	2
Hexachlorobenzene	µg/L	Grab	1
Hexachlorobutadiene	µg/L	Grab	1

[1] Appendix A to 40 C.F.R. Part 423

Parameter	Units	Effluent Sample Type	Maximum Reporting Level[1]
Hexachloroethane	µg/L	Grab	1
Methyl bromide (Bromomethane)	µg/L	Grab	1
Naphthalene	µg/L	Grab	10
Parachlorometa cresol	µg/L	Grab	--
Tetrachloroethene	µg/L	Grab	0.5
Toluene	µg/L	Grab	2
trans-1,2-Dichloroethylene	µg/L	Grab	1
Trichloroethene	µg/L	Grab	2
Vinyl chloride	µg/L	Grab	0.5
Methyl-tert-butyl ether (MTBE)	µg/L	Grab	--
Trichlorofluoromethane	µg/L	Grab	--
1,1,1-Trichloroethane	µg/L	Grab	0.5
1,1-dichloroethane	µg/L	Grab	0.5
1,1-dichloroethylene	µg/L	Grab	0.5
1,2-dichloropropane	µg/L	Grab	0.5
1,3-dichloropropylene	µg/L	Grab	0.5
1,1,2,2-tetrachloroethane	µg/L	Grab	0.5
1,1,2-Trichloro-1,2,2-Trifluoroethane	µg/L	Grab	0.5
1,2,4-trichlorobenzene	µg/L	Grab	1
1,2-dichoroethane	µg/L	Grab	0.5
1,2-dichlorobenzene	µg/L	Grab	0.5
1,3-dichlorobenzene	µg/L	Grab	0.5
1,4-dichlorobenzene	µg/L	Grab	0.5
Styrene	µg/L	Grab	--
Xylenes	µg/L	Grab	--
1,2-Benzanthracene	µg/L	Grab	5
1,2-Diphenylhydrazine	µg/L	Grab	1
2-Chlorophenol	µg/L	Grab	5
2,4-Dichlorophenol	µg/L	Grab	5
2,4-Dimethylphenol	µg/L	Grab	2
2,4-Dinitrophenol	µg/L	Grab	5
2,4-Dinitrotoluene	µg/L	Grab	5
2,4,6-Trichlorophenol	µg/L	Grab	10
2,6-Dinitrotoluene	µg/L	Grab	5
2-Nitrophenol	µg/L	Grab	10
2-Chloronaphthalene	µg/L	Grab	10
3,3'-Dichlorobenzidine	µg/L	Grab	5
3,4-Benzofluoranthene	µg/L	Grab	10
4-Chloro-3-methylphenol	µg/L	Grab	5
4,6-Dinitro-2-methylphenol	µg/L	Grab	10
4-Nitrophenol	µg/L	Grab	10
4-Bromophenyl phenyl ether	µg/L	Grab	10
4-Chlorophenyl phenyl ether	µg/L	Grab	5
Acenaphthene	µg/L	Grab	1
Acenaphthylene	µg/L	Grab	10
Anthracene	µg/L	Grab	10
Benzidine	µg/L	Grab	5
Benzo(a)pyrene (3,4-Benzopyrene)	µg/L	Grab	2
Benzo(g,h,i)perylene	µg/L	Grab	5
Benzo(k)fluoranthene	µg/L	Grab	2

Parameter	Units	Effluent Sample Type	Maximum Reporting Level[1]
Bis(2-chloroethoxy) methane	µg/L	Grab	5
Bis(2-chloroethyl) ether	µg/L	Grab	1
Bis(2-chloroisopropyl) ether	µg/L	Grab	10
Bis(2-ethylhexyl) phthalate[2]	µg/L	Grab	5
Butyl benzyl phthalate	µg/L	Grab	10
Chrysene	µg/L	Grab	5
Di-n-butylphthalate	µg/L	Grab	10
Di-n-octylphthalate	µg/L	Grab	10
Dibenzo(a,h)-anthracene	µg/L	Grab	0.1
Diethyl phthalate	µg/L	Grab	10
Dimethyl phthalate	µg/L	Grab	10
Fluoranthene	µg/L	Grab	10
Fluorene	µg/L	Grab	10
Hexachlorocyclopentadiene	µg/L	Grab	5
Indeno(1,2,3-c,d)pyrene	µg/L	Grab	0.05
Isophorone	µg/L	Grab	1
N-Nitrosodiphenylamine	µg/L	Grab	1
N-Nitrosodimethylamine	µg/L	Grab	5
N-Nitrosodi-n-propylamine	µg/L	Grab	5
Nitrobenzene	µg/L	Grab	10
Pentachlorophenol	µg/L	Grab	1
Phenanthrene	µg/L	Grab	5
Phenol	µg/L	Grab	1
Pyrene	µg/L	Grab	10
Aluminum	µg/L	24-hr Composite[3]	--
Antimony	µg/L	24-hr Composite[3]	5
Arsenic	µg/L	24-hr Composite[3]	10
Asbestos	µg/L	24-hr Composite[3]	--
Barium	µg/L	24-hr Composite[3]	--
Beryllium	µg/L	24-hr Composite[3]	2
Cadmium	µg/L	24-hr Composite[3]	0.5
Chromium (III)	µg/L	24-hr Composite[3]	50
Chromium (VI)	µg/L	24-hr Composite[3]	10
Copper	µg/L	24-hr Composite[3]	0.5
Cyanide	µg/L	24-hr Composite[3]	5
Fluoride	µg/L	24-hr Composite[3]	--
Iron	µg/L	24-hr Composite[3]	--
Lead	µg/L	24-hr Composite[3]	0.5
Mercury[4]	µg/L	Grab	0.5
Manganese	µg/L	24-hr Composite[3]	--
Molybdenum	µg/L	24-hr Composite[3]	--
Nickel	µg/L	24-hr Composite[3]	1
Selenium	µg/L	24-hr Composite[3]	5
Silver	µg/L	24-hr Composite[3]	0.25
Thallium	µg/L	24-hr Composite[3]	1
Tributyltin	µg/L	24-hr Composite[3]	--
Zinc	µg/L	24-hr Composite[3]	20
4,4'-DDD	µg/L	24-hr Composite[3]	0.05
4,4'-DDE	µg/L	24-hr Composite[3]	0.05
4,4'-DDT	µg/L	24-hr Composite[3]	0.01

Parameter	Units	Effluent Sample Type	Maximum Reporting Level[1]
alpha-Endosulfan	µg/L	24-hr Composite[3]	0.02
alpha-Hexachlorocyclohexane (BHC)	µg/L	24-hr Composite[3]	0.01
Alachlor	µg/L	24-hr Composite[3]	--
Aldrin	µg/L	24-hr Composite[3]	0.005
beta-Endosulfan	µg/L	24-hr Composite[3]	0.01
beta-Hexachlorocyclohexane	µg/L	24-hr Composite[3]	0.005
Chlordane	µg/L	24-hr Composite[3]	0.1
delta-Hexachlorocyclohexane	µg/L	24-hr Composite[3]	0.005
Dieldrin	µg/L	24-hr Composite[3]	0.01
Endosulfan sulfate	µg/L	24-hr Composite[3]	0.01
Endrin	µg/L	24-hr Composite[3]	0.01
Endrin Aldehyde	µg/L	24-hr Composite[3]	0.01
Heptachlor	µg/L	24-hr Composite[3]	0.01
Heptachlor Epoxide	µg/L	24-hr Composite[3]	0.02
Lindane (gamma-Hexachlorocyclohexane)	µg/L	24-hr Composite[3]	0.5
PCB-1016	µg/L	24-hr Composite[3]	0.5
PCB-1221	µg/L	24-hr Composite[3]	0.5
PCB-1232	µg/L	24-hr Composite[3]	0.5
PCB-1242	µg/L	24-hr Composite[3]	0.5
PCB-1248	µg/L	24-hr Composite[3]	0.5
PCB-1254	µg/L	24-hr Composite[3]	0.5
PCB-1260	µg/L	24-hr Composite[3]	0.5
Toxaphene	µg/L	24-hr Composite[3]	--
Atrazine	µg/L	24-hr Composite[3]	--
Bentazon	µg/L	24-hr Composite[3]	--
Carbofuran	µg/L	24-hr Composite[3]	--
2,4-D	µg/L	24-hr Composite[3]	--
Dalapon	µg/L	24-hr Composite[3]	--
1,2-Dibromo-3-chloropropane (DBCP)	µg/L	24-hr Composite[3]	--
Di(2-ethylhexyl)adipate	µg/L	24-hr Composite[3]	--
Dinoseb	µg/L	24-hr Composite[3]	--
Diquat	µg/L	24-hr Composite[3]	--
Endothal	µg/L	24-hr Composite[3]	--
Ethylene Dibromide	µg/L	24-hr Composite[3]	--
Methoxychlor	µg/L	24-hr Composite[3]	--
Molinate (Ordram)	µg/L	24-hr Composite[3]	--
Oxamyl	µg/L	24-hr Composite[3]	--
Picloram	µg/L	24-hr Composite[3]	--
Simazine (Princep)	µg/L	24-hr Composite[3]	--
Thiobencarb	µg/L	24-hr Composite[3]	--
2,3,7,8-TCDD (Dioxin)	µg/L	24-hr Composite[3]	--
2,4,5-TP (Silvex)	µg/L	24-hr Composite[3]	--
Diazinon	µg/L	24-hr Composite[3]	--
Chlorpyrifos	µg/L	24-hr Composite[3]	--
Ammonia (as N)[4]	mg/L	24-hr Composite[3]	--
Boron	µg/L	24-hr Composite[3]	--
Chloride	mg/L	24-hr Composite[3]	--
Flow[4]	MGD	Meter	--
Hardness (as $CaCO_3$)[4]	mg/L	Grab	--
Foaming Agents (MBAS)	µg/L	24-hr Composite[3]	--

Parameter	Units	Effluent Sample Type	Maximum Reporting Level[1]
Mercury, Methyl	ng/L	Grab	--
Nitrate (as N)[4]	mg/L	24-hr Composite[3]	--
Nitrite (as N)[4]	mg/L	24-hr Composite[3]	--
pH[4]	Std Units	Grab	--
Phosphorus, Total (as P)	mg/L	24-hr Composite[3]	--
Specific conductance (EC)[4]	µmhos/cm	24-hr Composite[3]	--
Sulfate	mg/L	24-hr Composite[3]	--
Sulfide (as S)	mg/L	24-hr Composite[3]	--
Sulfite (as SO_3)	mg/L	24-hr Composite[3]	--
Temperature[4]	^oC	Grab	--
Total Dissolved Solids (TDS)[4]	mg/L	24-hr Composite[3]	--

[1] The reporting levels required in this table for priority pollutant constituents are established based on Section 2.4.2 and Appendix 4 of the SIP.
[2] In order to verify if bis (2-ethylhexyl) phthalate is truly present, the Discharger shall take steps to assure that sample containers, sampling apparatus, and analytical equipment are not sources of the detected contaminant.
[3] 24-hour flow proportional composite.
[4] The Discharger is not required to conduct effluent monitoring for constituents that have already been sampled in a given month, as required in Table E-3, except for hardness, pH, and temperature, which shall be conducted concurrently with the effluent sampling.

X. REPORTING REQUIREMENTS

A. General Monitoring and Reporting Requirements

1. The Discharger shall comply with all Standard Provisions (Attachment D) related to monitoring, reporting, and recordkeeping.

2. Upon written request of the Central Valley Water Board, the Discharger shall submit a summary monitoring report. The report shall contain both tabular and graphical summaries of the monitoring data obtained during the previous year(s).

3. **Compliance Time Schedules.** For compliance time schedules included in the Order, the Discharger shall submit to the Central Valley Water Board, on or before each compliance due date, the specified document or a written report detailing compliance or noncompliance with the specific date and task. If noncompliance is reported, the Discharger shall state the reasons for noncompliance and include an estimate of the date when the Discharger will be in compliance. The Discharger shall notify the Central Valley Water Board by letter when it returns to compliance with the compliance time schedule.

4. The Discharger shall report to the Central Valley Water Board any toxic chemical release data it reports to the State Emergency Response Commission within 15 days of reporting the data to the Commission pursuant to section 313 of the "*Emergency Planning and Community Right to Know Act*" of 1986.

B. Self-Monitoring Reports (SMR's)

1. The Discharger shall electronically submit SMR's using the State Water Board's California Integrated Water Quality System (CIWQS) Program Web site (http://www.waterboards.ca.gov/ciwqs/index.html). The CIWQS Web site will provide additional information for SMR submittal in the event there will be a planned service interruption for electronic submittal.

2. The Discharger shall report in the SMR the results for all monitoring specified in this MRP under sections III through IX. The Discharger shall submit monthly SMR's including the results of all required monitoring using U.S. EPA-approved test methods or other test methods specified in this Order. SMR's are to include all new monitoring results obtained since the last SMR was submitted. If the Discharger monitors any pollutant more frequently than required by this Order, the results of this monitoring shall be included in the calculations and reporting of the data submitted in the SMR.

3. Monitoring periods and reporting for all required monitoring shall be completed according to the following schedule:

Table E-9. Monitoring Periods and Reporting Schedule

Sampling Frequency	Monitoring Period Begins On…	Monitoring Period	SMR Due Date
Continuous	Permit effective date	All	Submit with monthly SMR
1/Day	Permit effective date	(Midnight through 11:59 PM) or any 24-hour period that reasonably represents a calendar day for purposes of sampling.	Submit with monthly SMR
1/Week	Permit effective date	Sunday through Saturday	Submit with monthly SMR
3/Week	Permit effective date	Sunday through Saturday	Submit with monthly SMR
1/Month	Permit effective date	1st day of calendar month through last day of calendar month	First day of second calendar month following month of sampling
1/Quarter	Permit effective date	1 January through 31 March 1 April through 30 June 1 July through 30 September 1 October through 31 December	1 May 1 August 1 November 1 February of following year
1/Year	Permit effective date	1 January through 31 December	1 February of following year

4. **Reporting Protocols.** The Discharger shall report with each sample result the applicable Reporting Level (RL) and the current laboratory's Method Detection Limit (MDL), as determined by the procedure in 40 C.F.R. part 136.

   The Discharger shall report the results of analytical determinations for the presence of chemical constituents in a sample using the following reporting protocols:

   a. Sample results greater than or equal to the RL shall be reported as measured by the laboratory (i.e., the measured chemical concentration in the sample).

   b. Sample results less than the RL, but greater than or equal to the laboratory's MDL, shall be reported as "Detected, but Not Quantified," or DNQ. The estimated chemical concentration of the sample shall also be reported.

      For the purposes of data collection, the laboratory shall write the estimated chemical concentration next to DNQ. The laboratory may, if such information is available, include numerical estimates of the data quality for the reported result. Numerical estimates of data quality may be percent accuracy (± a percentage of the reported value), numerical ranges (low to high), or any other means considered appropriate by the laboratory.

   c. Sample results less than the laboratory's MDL shall be reported as "Not Detected," or ND.

d. Dischargers are to instruct laboratories to establish calibration standards so that the Minimum Level (ML) value (or its equivalent if there is differential treatment of samples relative to calibration standards) is the lowest calibration standard. At no time is the Discharger to use analytical data derived from extrapolation beyond the lowest point of the calibration curve.

5. **Multiple Sample Data.** When determining compliance with an AMEL, AWEL, or MDEL for priority pollutants and more than one sample result is available, the Discharger shall compute the arithmetic mean unless the data set contains one or more reported determinations of "Detected, but Not Quantified" (DNQ) or "Not Detected" (ND). In those cases, the Discharger shall compute the median in place of the arithmetic mean in accordance with the following procedure:

   a. The data set shall be ranked from low to high, ranking the reported ND determinations lowest, DNQ determinations next, followed by quantified values (if any). The order of the individual ND or DNQ determinations is unimportant.

   b. The median value of the data set shall be determined. If the data set has an odd number of data points, then the median is the middle value. If the data set has an even number of data points, then the median is the average of the two values around the middle unless one or both of the points are ND or DNQ, in which case the median value shall be the lower of the two data points where DNQ is lower than a value and ND is lower than DNQ.

6. The Discharger shall submit SMR's in accordance with the following requirements:

   a. The Discharger shall arrange all reported data in a tabular format. The data shall be summarized to clearly illustrate whether the facility is operating in compliance with interim and/or final effluent limitations. The Discharger is not required to duplicate the submittal of data that is entered in a tabular format within CIWQS. When electronic submittal of data is required and CIWQS does not provide for entry into a tabular format within the system, the Discharger shall electronically submit the data in a tabular format as an attachment.

   b. The Discharger shall attach a cover letter to the SMR. The information contained in the cover letter shall clearly identify violations of the WDR's; discuss corrective actions taken or planned; and the proposed time schedule for corrective actions. Identified violations must include a description of the requirement that was violated and a description of the violation.

   c. The Discharger shall attach all laboratory analysis sheets, including quality assurance/quality control information, with all its SMR's for which sample analyses were performed.

7. The Discharger shall submit in the SMR's calculations and reports in accordance with the following requirements:

   a. **Mass Loading Limitations**. For BOD_5, TSS, and ammonia, the Discharger shall calculate and report the mass loading (lbs/day) in the SMR's. The mass loading shall be calculated as follows:

      Mass Loading (lbs/day) = Flow (MGD) x Concentration (mg/L) x 8.34

      When calculating daily mass loading, the daily average flow and constituent concentration shall be used. For weekly average mass loading, the weekly average flow and constituent concentration shall be used. For monthly average mass loading, the monthly average flow and constituent concentration shall be used.

b. **Removal Efficiency (BOD_5 and TSS).** The Discharger shall calculate and report the percent removal of BOD_5 and TSS in the SMR's. The percent removal shall be calculated as specified in Section VII.A. of the Limitations and Discharge Requirements.

c. **Total Coliform Organisms Effluent Limitations**. The Discharger shall calculate and report the 7-day median of total coliform organisms for the effluent. The 7-day median of total coliform organisms shall be calculated as specified in Section VII.D of the Limitations and Discharge Requirements.

d. **Total Calendar Annual Mass Loading Mercury Effluent Limitations.** The Discharger shall calculate and report the total calendar annual mercury mass loading for the effluent in the December SMR. The total calendar year annual mass loading shall be calculated as specified in section VII.B of the Limitations and Discharge Requirements.

e. **Dissolved Oxygen Receiving Water Limitations**. The Discharger shall calculate and report monthly in the self-monitoring report: i) the dissolved oxygen concentration, ii) the percent of saturation in the main water mass, and iii) the 95th percentile dissolved oxygen concentration.

f. **Turbidity Receiving Water Limitations**. The Discharger shall calculate and report the turbidity increase in the receiving water applicable to the natural turbidity condition specified in Section V.A.17.a-e. of the Limitations and Discharge Requirements.

g. **Temperature Receiving Water Limitations**. The Discharger shall calculate and report the temperature increase in the receiving water based on the difference in temperature at Monitoring Locations RSW-001 and RSW-002.

C. Discharge Monitoring Reports (DMR's) – Not Applicable

D. Other Reports

1. The Discharger shall report the results of any special studies, acute and chronic toxicity testing, TRE/TIE, toxicity evaluation study, PMP, and Pollution Prevention Plan required by Special Provisions – VI.C. The Discharger shall submit reports with the first monthly SMR scheduled to be submitted on or immediately following the report due date.

2. **Within 60 days of permit adoption**, the Discharger shall submit a report outlining reporting levels (RL's), method detection limits (MDL's), and analytical methods for the constituents listed in tables E-2, E-3, E-5, E-6, E-7, and E-8. In addition, no less than 6 months prior to conducting the effluent and receiving water characterization monitoring required in Section IX. D, the Discharger shall submit a report outlining RL's, MDL's, and analytical methods for the constituents listed in Table E-8. The Discharger shall comply with the monitoring and reporting requirements for CTR constituents as outlined in section 2.3 and 2.4 of the SIP. The maximum required reporting levels for priority pollutant constituents shall be based on the Minimum Levels (ML's) contained in Appendix 4 of the SIP, determined in accordance with Section 2.4.2 and Section 2.4.3 of the SIP. In accordance with Section 2.4.2 of the SIP, when there is more than one ML value for a given substance, the Central Valley Water Board shall include as RL's, in the permit, all ML values, and their associated analytical methods, listed in Appendix 4 that are below the calculated effluent limitation. The Discharger may select any one of those cited analytical methods for compliance determination. If no ML value is below the effluent limitation, then the Central Valley Water Board shall select as the RL, the lowest

ML value, and its associated analytical method, listed in Appendix 4 for inclusion in the permit. Table E-8 provides required maximum reporting levels in accordance with the SIP.

3. **Annual Operations Report.** By 30 January of each year, the Discharger shall submit a written report to the Executive Officer containing the following:

   a. The names, certificate grades, and general responsibilities of all persons employed at the Facility.

   b. The names and telephone numbers of persons to contact regarding the plant for emergency and routine situations.

   c. A statement certifying when the flow meter(s) and other monitoring instruments and devices were last calibrated, including identification of who performed the calibration.

   d. A statement certifying whether the current operation and maintenance manual, and contingency plan, reflect the wastewater treatment plant as currently constructed and operated, and the dates when these documents were last revised and last reviewed for adequacy.

   e. The Discharger may also be requested to submit an annual report to the Central Valley Water Board with both tabular and graphical summaries of the monitoring data obtained during the previous year. Any such request shall be made in writing. The report shall discuss the compliance record. If violations have occurred, the report shall also discuss the corrective actions taken and planned to bring the discharge into full compliance with the waste discharge requirements.

ATTACHMENT F – FACT SHEET

Contents

I. Permit Information F-3
II. Facility Description F-4
A. Description of Wastewater and Biosolids Treatment and Controls F-4
B. Discharge Points and Receiving Waters F-5
C. Summary of Existing Requirements and Self-Monitoring Report (SMR) Data F-5
D. Compliance Summary F-7
E. Planned Changes F-7
III. Applicable Plans, Policies, and Regulations F-7
A. Legal Authorities F-7
B. California Environmental Quality Act (CEQA) F-7
C. State and Federal Laws, Regulations, Policies, and Plans F-7
D. Impaired Water Bodies on CWA 303(d) List F-10
E. Other Plans, Polices and Regulations F-11
IV. Rationale For Effluent Limitations and Discharge Specifications F-11
A. Discharge Prohibitions F-12
B. Technology-Based Effluent Limitations F-12
1. Scope and Authority F-12
2. Applicable Technology-Based Effluent Limitations F-13
C. Water Quality-Based Effluent Limitations (WQBEL's) F-14
1. Scope and Authority F-14
2. Applicable Beneficial Uses and Water Quality Criteria and Objectives F-15
3. Determining the Need for WQBEL's F-23
4. WQBEL Calculations F-43
5. Whole Effluent Toxicity (WET) F-45
D. Final Effluent Limitation Considerations F-48
1. Mass-based Effluent Limitations F-48
2. Averaging Periods for Effluent Limitations F-49
3. Satisfaction of Anti-Backsliding Requirements F-49
4. Antidegradation Policies F-51
5. Stringency of Requirements for Individual Pollutants F-57
E. Interim Effluent Limitations – Not Applicable F-58
F. Land Discharge Specifications – Not Applicable F-58
G. Recycling Specifications – Not Applicable F-58
V. Rationale for Receiving Water Limitations F-59
A. Surface Water F-59
B. Groundwater F-61
VI. Rationale for Provisions F-61
A. Standard Provisions F-61
B. Special Provisions F-62
1. Reopener Provisions F-62
2. Special Studies and Additional Monitoring Requirements F-63
3. Best Management Practices and Pollution Prevention F-66
4. Construction, Operation, and Maintenance Specifications F-66
5. Special Provisions for Municipal Facilities (POTW's Only) F-67
6. Other Special Provisions F-67
7. Compliance Schedules – Not Applicable F-68

VII. Rationale for Monitoring and Reporting Requirements F-68
A. Influent Monitoring F-68
B. Effluent Monitoring F-68
C. Whole Effluent Toxicity Testing Requirements F-70
D. Receiving Water Monitoring F-70
1. Surface Water F-70
2. Groundwater – Not Applicable F-72
E. Other Monitoring Requirements F-72
VIII. Public Participation F-73
A. Notification of Interested Parties F-73
B. Written Comments F-73
C. Public Hearing F-73
D. Reconsideration of Waste Discharge Requirements F-73
E. Information and Copying F-74
F. Register of Interested Persons F-74
G. Additional Information F-74

Tables

Table F-1. Facility Information F-3
Table F-2. Historic Effluent Limitations and Monitoring Data F-5
Table F-3. Basin Plan Beneficial Uses F-8
Table F-4. 303 (d) List for Sacramento River (Knights Landing to the Delta) and Natomas Cross Canal F-10
Table F-5. Summary of Technology-based Effluent Limitations F-14
Table F-6. Lead Evaluation (Design Ambient Hardness = 33 mg/L) F-19
Table F-7. Copper Evaluation (Design Ambient Hardness = 33 mg/L) F-19
Table F-8. Chromium III Evaluation (Design Ambient Hardness = 33 mg/L) F-20
Table F-9. Cadmium (Chronic) Evaluation (Design Ambient Hardness = 33 mg/L) F-20
Table F-10. Cadmium (Acute) Evaluation (Design Ambient Hardness = 33 mg/L) F-20
Table F-11. Nickel Evaluation (Design Ambient Hardness = 33 mg/L) F-21
Table F-12. Silver (Acute) Evaluation (Design Ambient Hardness = 33 mg/L) F-21
Table F-13. Zinc Evaluation (Design Ambient Hardness = 33 mg/L) F-22
Table F-14. Summary of Design Ambient Hardness and CTR Criteria for Hardness-dependent Metals F-22
Table F-15. Salinity Water Quality Criteria/Objectives F-31
Table F-16. Summary of Water Quality-Based Effluent Limitations F-44
Table F-17. Whole Effluent Chronic Toxicity Testing Results F-46
Table F-18. Summary of Final Effluent Limitations F-57

ATTACHMENT F – FACT SHEET

As described in section II.B of this Order, the Central Valley Water Board incorporates this Fact Sheet as findings of the Central Valley Water Board supporting the issuance of this Order. This Fact Sheet includes the legal requirements and technical rationale that serve as the basis for the requirements of this Order.

This Order has been prepared under a standardized format to accommodate a broad range of discharge requirements for Dischargers in California. Only those sections or subsections of this Order that are specifically identified as "not applicable" have been determined not to apply to this Discharger. Sections or subsections of this Order not specifically identified as "not applicable" are fully applicable to this Discharger.

I. PERMIT INFORMATION

The following table summarizes administrative information related to the Facility.

Table F-1. Facility Information

WDID	5A31NP00001
CIWQS Facility Place ID	206730
Discharger	United Auburn Indian Community
Name of Facility	Thunder Valley Casino Wastewater Treatment Plant
Facility Address	1200 Athens Avenue
	Lincoln, CA 95648
	Placer County
Facility Contact, Title and Phone	Dawn Clayton, General Manager, (916) 408-8472
Authorized Person to Sign and Submit Reports	Donald Brown, Project Manager, (916) 544-5120
Mailing Address	Same as Facility address
Billing Address	Same as Facility address
Type of Facility	Publicly Owned Treatment Works (POTW)[1]
Major or Minor Facility	Minor
Threat to Water Quality	1
Complexity	A
Pretreatment Program	Not Applicable
Recycling Requirements	Producer – Land Irrigation
Facility Permitted Flow	Current Facility: peak daily flow of 0.70 million gallons per day (MGD) Upgraded Facility: peak daily flow of 0.875 MGD
Facility Design Flow	Current Facility: peak daily flow of 0.70 MGD Upgraded Facility: peak daily flow of 0.875 MGD
Watershed	Lower Sacramento
Receiving Water	Orchard Creek
Receiving Water Type	Inland surface water

[1] 40 C.F.R. section 403.3(q) states, "*The term Publicly Owned Treatment Works or POTW means a treatment works as defined by section 212 of the Act, which is owned by a State or municipality (as defined by section 502(4) of the Act)*. Clean Water Act section 502(4) states, "*The term 'municipality' means a city, town, borough, county, parish, district, association, or other public body created by or pursuant to State law and having jurisdiction over disposal of sewage, industrial wastes, or other wastes, or an Indian tribe or an authorized Indian tribal organization, or a designated and approved management agency under section 208 of this Act*."

A. The United Auburn Indian Community (hereinafter Discharger) is the owner of the Thunder Valley Casino Wastewater Treatment Plant (hereinafter Facility), a POTW.

For the purposes of this Order, references to the "discharger" or "permittee" in applicable federal and state laws, regulations, plans, or policy are held to be equivalent to references to the Discharger herein.

B. The Facility discharges wastewater to Orchard Creek, a water of the United States, and a tributary to Auburn Ravine, East Side Canal, Natomas Cross Canal, and the Sacramento River within the Lower Sacramento watershed. The Discharger was previously regulated by Order R5-2010-0005 and National Pollutant Discharge Elimination System (NPDES) Permit No. CA0084697 adopted on 28 January 2010 and expired on 1 January 2015. Attachment B provides a map of the area around the Facility. Attachment C provides a flow schematic of the Facility.

Prior to making any change in the point of discharge, place of use, or purpose of use of treated wastewater that results in a decrease of flow in any portion of a watercourse, the Discharger must file a petition with the State Water Board, Division of Water Rights, and receive approval for such a change. The State Water Board retains the jurisdictional authority to enforce such requirements under Water Code section 1211.

C. The Discharger filed a report of waste discharge (ROWD) and submitted an application for reissuance of its WDR's and NPDES permit on 3 July 2014. The application was deemed complete on 31 October 2014.

II. FACILITY DESCRIPTION

The Discharger provides sewerage service for the Thunder Valley Casino, a gaming and entertainment facility, and serves a population that fluctuates with the patronage at the Facility. The Facility treats wastewater collected from the Thunder Valley Casino Resort, Fire Station, and blowdown generated from the Central Plant that provides heating, ventilation, and air conditioning. The current Facility has a design daily peak flow capacity of 0.70 MGD.

A. Description of Wastewater and Biosolids Treatment and Controls

The treatment system at the Facility consists of an influent pump station, headworks (with flow measurement and fine screening), four immersed membrane bioreactors (IMB's), and ultraviolet light (UV) disinfection. The IMB's combine an anoxic zone, aeration, clarification, and membrane filtration in a single tank. The Facility uses microfiltration, in which wastewater is pulled through 0.1 micron membranes by a vacuum. Treated wastewater may either be discharged to Orchard Creek or directed to a recycled water storage tank where it may be used on-site for landscape irrigation.

The Discharger performs maintenance cleaning of the membranes several times per week using chlorine. During cleaning, the Discharger turns the effluent pumps off to eliminate discharges to Orchard Creek and pumps water to the recycled water storage tank. Clean permeate is injected with sodium hypochlorite and pumped in reverse direction through the membranes and then blends with the mixed liquor in which the membranes are submerged. Following the cleaning cycle, the Discharger discharges filter permeate to the recycled water storage tank until the chlorine residual and turbidity levels are acceptable before resuming discharges to Orchard Creek. The Discharger also has alarms and controls to discontinue discharges to Orchard Creek and direct flows to the recycled water storage tank when turbidity levels exceed 0.18 NTU.

Sludge is pumped as needed directly from the process overflow tank to the belt filter press unit process and trucked offsite to a local landfill.

B. Discharge Points and Receiving Waters

1. The Facility is located in Sections 32 and 33, T12N, R6E, MDB&M, as shown in Attachment B, a part of this Order.

2. Treated municipal wastewater is discharged at Discharge Point 001 to Orchard Creek, a water of the United States and a tributary to Auburn Ravine, East Side Canal, Natomas Cross Canal, and the Sacramento River at a point latitude 38° 50' 44" N and longitude 121° 19' 1" W.

C. Summary of Existing Requirements and Self-Monitoring Report (SMR) Data

Effluent limitations contained in Order R5-2010-0005 for discharges from Discharge Point 001 (Monitoring Location EFF-001) and representative monitoring data from the term of Order R5-2010-0005 are as follows:

Table F-2. Historic Effluent Limitations and Monitoring Data

Parameter	Units	Effluent Limitation			Monitoring Data (January 2012 – August 2014)		
		Average Monthly	Average Weekly	Maximum Daily	Highest Average Monthly Discharge	Highest Average Weekly Discharge	Highest Daily Discharge
Biochemical Oxygen Demand (5-day @ 20°C)	mg/L	10	15	20	<3.13	3.6	6.9
	lbs/day[1]	28	44	58	<6.58	<8.6	14
	lbs/day[2]	58	88	117			
	lbs/day[3]	73	109	146			
	% Removal	85	--	--	99[4]	--	--
Total Suspended Solids	mg/L	10	15	20	<5	<5	6.8
	lbs/day[1]	28	44	58	<10.9	<14.3	<14.7
	lbs/day[2]	58	88	117			
	lbs/day[3]	73	109	146			
	% Removal	85	--	--	96[4]	--	--
pH	standard units	--	--	6.5 – 8.5	--	--	6.65 – 7.96
Cadmium, Total Recoverable	µg/L	0.05	--	0.10	0.045	--	0.045
Delta-BHC	µg/L	--	--	ND[5]	--	--	ND
Endrin Aldehyde	µg/L	--	--	ND[5]	--	--	ND
Lead, Total Recoverable	µg/L	0.05	--	0.10	0.301	--	0.301
Mercury, Total Recoverable	lbs/month	0.00020	--	--	0.00029	--	--
Zinc, Total Recoverable	µg/L	10	--	20	33	--	44
Aluminum, Total Recoverable	mg/L	76	--	128	58	--	58

Parameter	Units	Effluent Limitation			Monitoring Data (January 2012 – August 2014)		
		Average Monthly	Average Weekly	Maximum Daily	Highest Average Monthly Discharge	Highest Average Weekly Discharge	Highest Daily Discharge
Ammonia Nitrogen, Total (as N)	mg/L	1.1	--	2.1	<0.1	--	0.15
	lbs/day[1]	3.2	--	6.1	<0.22	--	0.37
	lbs/day[2]	6.4	--	12		--	
	lbs/day[3]	8.0	--	15		--	
Electrical Conductivity @ 25°C	µmhos/cm	700	--	--	673	--	--
Iron, Total Recoverable	µg/L	300[6]	--	--	48[7]	--	--
Manganese, Total Recoverable	µg/L	50[6]	--	--	20[7]	--	--
Total Coliform Organisms	MPN/100 mL	--	2.2[8]	23[9]/240[10]	--	--	<1.8
Total Residual Chlorine	mg/L	0.011[11]	--	0.019[12]	0.001	--	0.001
Acute Toxicity	% Survival	--	--	70[13]/90[14]	--	--	98[15]
Average Dry Weather Flow	MGD	--	--	0.35[16]/ 0.70[17]/ 0.875[18]	--	--	0.334
Chronic Toxicity	TUc	--	--	[19]	--	--	8[20]

NR = Not reported

1 Mass limitations are based on the maximum peak daily flow of 0.35 MGD.
2 Mass limitations are based on the maximum peak daily flow of 0.70 MGD.
3 Mass limitations are based on the maximum peak daily flow of 0.875 MGD.
4 Lowest observed monthly percent removal.
5 ND indicates non-detect.
6 Applied as an annual average effluent limitation.
7 Represents the maximum observed annual average concentration.
8 Applied as a 7-day median effluent limitation.
9 Not to be exceeded more than once in any 30-day period.
10 Applied as an instantaneous maximum effluent limitation.
11 Applied as a 4-day average effluent limitation.
12 Applied as a 1-hour average effluent limitation.
13 Minimum for any one bioassay.
14 Median for any three consecutive bioassays.
15 Represents the minimum lowest observed percent survival.
16 Applicable until compliance with Special Provision VI.C.6.a of Order R5-2010-0005.
17 Applicable upon compliance with Special Provision VI.C.6.a of Order R5-2010-0005.
18 Applicable upon compliance with Special Provision VI.C.6.b of Order R5-2010-0005.
19 There shall be no chronic toxicity in the effluent discharge.
20 Maximum observed result.

D. Compliance Summary

The Central Valley Water Board issued a Notice of Violation on 16 December 2014 for violations of reclaimed water reporting requirements since the adoption of Order R5-2010-0005.

E. Planned Changes

The Discharger is planning to upgrade and expand the Facility to increase the design peak daily flow to 0.875 MGD. The expansion of the Facility will include improvements to influent screening, biological treatment, and membrane filtration capacity, and effluent disinfection. The increase in flow capacity to 0.875 MGD could be triggered by one or more of the following changes to the casino and hotel: an increase in the number of active hotel rooms by building out shelled space within the existing hotel footprint; an increase in square footage of active restaurant space by building out shelled space within the existing casino footprint; or other miscellaneous improvements within the existing casino footprint.

III. APPLICABLE PLANS, POLICIES, AND REGULATIONS

The requirements contained in this Order are based on the requirements and authorities described in this section.

A. Legal Authorities

This Order serves as WDR's pursuant to article 4, chapter 4, division 7 of the California Water Code (commencing with section 13260). This Order is also issued pursuant to section 402 of the federal Clean Water Act (CWA) and implementing regulations adopted by the U.S. EPA and chapter 5.5, division 7 of the Water Code (commencing with section 13370). It shall serve as an NPDES permit for point source discharges from this Facility to surface waters.

B. California Environmental Quality Act (CEQA)

Under Water Code section 13389, this action to adopt an NPDES permit is exempt from the provisions of Chapter 3 of CEQA, (commencing with section 21100) of Division 13 of the Public Resources Code.

C. State and Federal Laws, Regulations, Policies, and Plans

1. **Water Quality Control Plans.** Requirements of this Order specifically implement the applicable Water Quality Control Plans.

   a. **Basin Plan.** The Central Valley Water Board adopted a Water Quality Control Plan, Fourth Edition (Revised October 2011), for the Sacramento and San Joaquin River Basins (hereinafter Basin Plan) that designates beneficial uses, establishes water quality objectives, and contains implementation programs and policies to achieve those objectives for all waters addressed through the plan. Requirements in this Order implement the Basin Plan.

   The Basin Plan at II-2.00 states that the beneficial uses of any specifically identified water body generally apply to its tributary streams. The Basin Plan in Table II-1, Section II, does not specifically identify beneficial uses for Orchard Creek, but does identify present and potential uses for Sacramento River from the Colusa Basin Drain to the "I" Street Bridge, to which Orchard Creek, via Auburn Ravine, East Side Canal, and Cross Canal, is tributary. In addition, the Basin Plan implements State Water Board Resolution 88-63, which established state policy that all waters, with certain exceptions, should be considered suitable or potentially suitable for municipal or domestic supply. Thus, beneficial uses applicable to Orchard Creek are as follows:

Table F-3. Basin Plan Beneficial Uses

Discharge Point	Receiving Water Name	Beneficial Use(s)
001	Orchard Creek	Existing: Municipal and domestic water supply (MUN); agricultural supply, including irrigation (AGR); water contact recreation (REC-1); non-contact water recreation (REC-2); warm freshwater habitat (WARM); cold freshwater habitat (COLD); warm and cold migration of aquatic organisms (MIGR); warm and cold spawning, reproduction, and/or early development (SPWN); wildlife habitat (WILD); and navigation (NAV).

2. **National Toxics Rule (NTR) and California Toxics Rule (CTR).** U.S. EPA adopted the NTR on 22 December 1992, and later amended it on 4 May 1995 and 9 November 1999. About forty criteria in the NTR applied in California. On 18 May 2000, U.S. EPA adopted the CTR. The CTR promulgated new toxics criteria for California and, in addition, incorporated the previously adopted NTR criteria that were applicable in the state. The CTR was amended on 13 February 2001. These rules contain federal water quality criteria for priority pollutants.

3. **State Implementation Policy.** On 2 March 2000, the State Water Board adopted the *Policy for Implementation of Toxics Standards for Inland Surface Waters, Enclosed Bays, and Estuaries of California* (State Implementation Policy or SIP). The SIP became effective on 28 April 2000, with respect to the priority pollutant criteria promulgated for California by the U.S. EPA through the NTR and to the priority pollutant objectives established by the Central Valley Water Board in the Basin Plan. The SIP became effective on 18 May 2000, with respect to the priority pollutant criteria promulgated by the U.S. EPA through the CTR. The State Water Board adopted amendments to the SIP on 24 February 2005, that became effective on 13 July 2005. The SIP establishes implementation provisions for priority pollutant criteria and objectives and provisions for chronic toxicity control. Requirements of this Order implement the SIP.

4. **Antidegradation Policy.** Federal regulation 40 C.F.R. section 131.12 requires that the state water quality standards include an antidegradation policy consistent with the federal policy. The State Water Board established California's antidegradation policy in State Water Board Resolution 68-16 ("*Statement of Policy with Respect to Maintaining High Quality of Waters in California*"). Resolution 68-16 is deemed to incorporate the federal antidegradation policy where the federal policy applies under federal law. Resolution 68-16 requires that existing water quality be maintained unless degradation is justified based on specific findings. The Central Valley Water Board's Basin Plan implements, and incorporates by reference, both the State and federal antidegradation policies. The permitted discharge must be consistent with the antidegradation provision of 40 C.F.R. section 131.12 and State Water Board Resolution 68-16.

5. **Anti-Backsliding Requirements.** Sections 402(o) and 303(d)(4) of the CWA and federal regulations at 40 C.F.R. section 122.44(l) restrict backsliding in NPDES permits. These anti-backsliding provisions require that effluent limitations in a reissued permit must be as stringent as those in the previous permit, with some exceptions in which limitations may be relaxed.

6. **Domestic Water Quality.** In compliance with Water Code section 106.3, it is the policy of the State of California that every human being has the right to safe, clean, affordable, and accessible water adequate for human consumption, cooking, and sanitary purposes. This Order promotes that policy by requiring discharges to meet maximum contaminant levels designed to protect human health and ensure that water is safe for domestic use.

7. **Endangered Species Act Requirements.** This Order does not authorize any act that results in the taking of a threatened or endangered species or any act that is now prohibited, or becomes prohibited in the future, under either the California Endangered Species Act (Fish and Game Code, §§ 2050 to 2097) or the Federal Endangered Species Act (16 U.S.C.A. §§ 1531 to 1544). This Order requires compliance with effluent limits, receiving water limits, and other requirements to protect the beneficial uses of waters of the state. The Discharger is responsible for meeting all requirements of the applicable Endangered Species Act.

8. **Emergency Planning and Community Right to Know Act.** Section 13263.6(a) of the Water Code, requires that *"the Regional Water Board shall prescribe effluent limitations as part of the waste discharge requirements of a POTW for all substances that the most recent toxic chemical release data reported to the state emergency response commission pursuant to Section 313 of the Emergency Planning and Community Right to Know Act of 1986 (42 U.S.C. Sec. 11023) (EPCRA) indicate as discharged into the POTW, for which the State Water Board or the Regional Water Board has established numeric water quality objectives, and has determined that the discharge is or may be discharged at a level which will cause, have the reasonable potential to cause, or contribute to, an excursion above any numeric water quality objective"*.

   The most recent toxic chemical data report does not indicate any reportable off-site releases or discharges to the collection system for this Facility. Therefore, a reasonable potential analysis based on information from EPCRA cannot be conducted. Based on information from EPCRA, there is no reasonable potential to cause or contribute to an excursion above any numeric water quality objectives included within the Basin Plan or in any State Water Board plan, so no effluent limitations are included in this permit pursuant to Water Code section 13263.6(a).

   However, as detailed elsewhere in this Order, available effluent data indicate that there are constituents present in the effluent that have a reasonable potential to cause or contribute to exceedances of water quality standards and require inclusion of effluent limitations based on federal and state laws and regulations.

9. **Storm Water Requirements.** U.S. EPA promulgated federal regulations for storm water on 16 November 1990 in 40 C.F.R. parts 122, 123, and 124. The NPDES Industrial Storm Water Program regulates storm water discharges from wastewater treatment facilities. Wastewater treatment plants are applicable industries under the storm water program and are obligated to comply with the federal regulations. The State Water Board does not require wastewater treatment facilities with design flows less than 1 MGD to obtain coverage under the Industrial Storm water General Order. Precipitation that directly falls on the paved surface area of the Facility is conveyed to the headworks for treatment. Stormwater runoff from the remainder of the Thunder Valley Casino Resort is collected and conveyed to s stormwater pond located to the south of the Facility. Therefore, this Order does not regulate storm water.

D. Impaired Water Bodies on CWA 303(d) List

1. Under section 303(d) of the 1972 CWA, states, territories and authorized tribes are required to develop lists of water quality limited segments. The waters on these lists do not meet water quality standards, even after point sources of pollution have installed the minimum required levels of pollution control technology. On 11 October 2011 U.S. EPA gave final approval to California's 2008-2010 section 303(d) List of Water Quality Limited Segments. The Basin Plan references this list of Water Quality Limited Segments (WQLSs), which are defined as "…*those sections of lakes, streams, rivers or other fresh water bodies where water quality does not meet (or is not expected to meet) water quality standards even after the application of appropriate limitations for point sources* (40 C.F.R. part 130, et seq.)." The Basin Plan also states, "*Additional treatment beyond minimum federal standards will be imposed on dischargers to [WQLSs]. Dischargers will be assigned or allocated a maximum allowable load of critical pollutants so that water quality objectives can be met in the segment*." Orchard Creek, Auburn Ravine, and East Side Canal are not listed on the 303(d) list of impaired water bodies. The listing for the Sacramento River from Knights Landing to the Delta is 303(d) listed for chlordane, DDT, dieldrin, mercury, polychlorinated biphenyls (PCB's), and unknown toxicity. The 303(d) listing for Natomas Cross Canal includes mercury.

2. **Total Maximum Daily Loads (TMDL's).** U.S. EPA requires the Central Valley Water Board to develop TMDL's for each 303(d) listed pollutant and water body combination. Table F-4, below, identifies the 303(d) listings and the status of each TMDL.

Table F-4. 303 (d) List for Sacramento River (Knights Landing to the Delta) and Natomas Cross Canal

Waterbody	Pollutant	Potential Sources	TMDL Completion[1]
Sacramento River	Chlordane	Source Unknown	(2021)
Sacramento River	DDT	Source Unknown	(2021)
Sacramento River	Dieldrin	Source Unknown	(2022)
Sacramento River	Mercury	Source Unknown	(2012)
Sacramento River	PCB's	Source Unknown	(2021)
Sacramento River	Unknown Toxicity	Source Unknown	(2019)
Natomas Cross Canal	Mercury	Source Unknown	(2021)

[1] Dates in parenthesis are proposed TMDL completion dates.

3. The 303(d) listings and TMDL's have been considered in the development of the Order. A pollutant-by-pollutant evaluation of each pollutant of concern is described in section IV.C of this Fact Sheet.

E. Other Plans, Polices and Regulations

1. **Tribal Council Resolution No. 1-26-10-01 Approving a Limited Waiver of Sovereign Immunity**. As described in Order R5-2010-0005, the Tribal Council for the United Auburn Indian Community adopted Resolution No. 1-26-10-01 on 26 January 2010, recognizing Order R5-2010-0005 as a legal and binding obligation of the Discharger and acknowledging and consenting to a Limited Waiver of Sovereign Immunity. Tribal Council Resolution No. 1-26-10-01 includes any subsequent renewals or revisions thereof, thus including this Order.

IV. RATIONALE FOR EFFLUENT LIMITATIONS AND DISCHARGE SPECIFICATIONS

Effluent limitations and toxic and pretreatment effluent standards established pursuant to sections 301 (Effluent Limitations), 302 (Water Quality Related Effluent Limitations), 304 (Information and Guidelines), and 307 (Toxic and Pretreatment Effluent Standards) of the CWA and amendments thereto are applicable to the discharge.

The CWA mandates the implementation of effluent limitations that are as stringent as necessary to meet water quality standards established pursuant to state or federal law [33 U.S.C., §1311(b)(1)(C); 40 C.F.R. § 122.44(d)(1)]. NPDES permits must incorporate discharge limits necessary to ensure that water quality standards are met. This requirement applies to narrative criteria as well as to criteria specifying maximum amounts of particular pollutants. Pursuant to federal regulations, 40 C.F.R. section 122.44(d)(1)(i), NPDES permits must contain limits that control all pollutants that "*are or may be discharged at a level which will cause, have the reasonable potential to cause, or contribute to an excursion above any state water quality standard, including state narrative criteria for water quality*." Federal regulations, 40 C.F.R. section 122.44(d)(1)(vi), further provide that *"[w]here a state has not established a water quality criterion for a specific chemical pollutant that is present in an effluent at a concentration that causes, has the reasonable potential to cause, or contributes to an excursion above a narrative criterion within an applicable State water quality standard, the permitting authority must establish effluent limits*."

The CWA requires point source dischargers to control the amount of conventional, non-conventional, and toxic pollutants that are discharged into the waters of the United States. The control of pollutants discharged is established through effluent limitations and other requirements in NPDES permits. There are two principal bases for effluent limitations in the Code of Federal Regulations: 40 C.F.R. section 122.44(a) requires that permits include applicable technology-based limitations and standards; and 40 C.F.R. section 122.44(d) requires that permits include WQBEL's to attain and maintain applicable numeric and narrative water quality criteria to protect the beneficial uses of the receiving water where numeric water quality objectives have not been established. The Basin Plan at page IV-17.00, contains an implementation policy, "*Policy for Application of Water Quality Objectives*," that specifies that the Central Valley Water Board "*will, on a case-by-case basis, adopt numerical limitations in orders which will implement the narrative objectives*." This Policy complies with 40 C.F.R. section 122.44(d)(1). With respect to narrative objectives, the Central Valley Water Board must establish effluent limitations using one or more of three specified sources, including: (1) U.S. EPA's published water quality criteria, (2) a proposed state criterion (i.e., water quality objective) or an explicit state policy interpreting its narrative water quality criteria (i.e., the Central Valley Water Board's "*Policy for Application of Water Quality Objectives*")(40 C.F.R. § 122.44(d)(1)(vi)(A), (B) or (C)), or (3) an indicator parameter.

The Basin Plan includes numeric site-specific water quality objectives and narrative objectives for toxicity, chemical constituents, discoloration, radionuclides, and tastes and odors. The narrative toxicity objective states: "*All waters shall be maintained free of toxic substances in concentrations that produce detrimental physiological responses in human, plant, animal, or aquatic life.*" (Basin Plan at III-8.00) The Basin Plan states that material and relevant information, including numeric

criteria, and recommendations from other agencies and scientific literature will be utilized in evaluating compliance with the narrative toxicity objective. The narrative chemical constituents objective states that waters shall not contain chemical constituents in concentrations that adversely affect beneficial uses. At minimum, "…*water designated for use as domestic or municipal supply (MUN) shall not contain concentrations of chemical constituents in excess of the maximum contaminant levels (MCLs)*" in Title 22 of CCR. The Basin Plan further states that, to protect all beneficial uses, the Central Valley Water Board may apply limits more stringent than MCLs. The narrative tastes and odors objective states: "*Water shall not contain taste- or odor-producing substances in concentrations that impart undesirable tastes or odors to domestic or municipal water supplies or to fish flesh or other edible products of aquatic origin, or that cause nuisance, or otherwise adversely affect beneficial uses.*"

A. Discharge Prohibitions

1. **Prohibition III.A (No discharge or application of waste other than that described in this Order).** This prohibition is based on Water Code section 13260 that requires filing of a ROWD before discharges can occur. The Discharger submitted a ROWD for the discharges described in this Order; therefore, discharges not described in this Order are prohibited.

2. **Prohibition III.B (No bypasses or overflow of untreated wastewater, except under the conditions at C.F.R. section 122.41(m)(4)).** As stated in section I.G of Attachment D, Standard Provisions, this Order prohibits bypass from any portion of the treatment facility. Federal regulations, 40 C.F.R. section 122.41(m), define "bypass" as the intentional diversion of waste streams from any portion of a treatment facility. This section of the federal regulations, 40 C.F.R. section 122.41(m)(4), prohibits bypass unless it is unavoidable to prevent loss of life, personal injury, or severe property damage. In considering the Regional Water Board's prohibition of bypasses, the State Water Board adopted a precedential decision, Order No. WQO 2002-0015, which cites the federal regulations, 40 C.F.R. section 122.41(m), as allowing bypass only for essential maintenance to assure efficient operation.

3. **Prohibition III.C (No controllable condition shall create a nuisance).** This prohibition is based on Water Code section 13050 that requires water quality objectives established for the prevention of nuisance within a specific area. The Basin Plan prohibits conditions that create a nuisance.

4. **Prohibition III.D (No inclusion of pollutant free wastewater shall cause improper operation of the Facility's systems).** This prohibition is based on 40 C.F.R. section 122.41 et seq. that requires the proper design and operation of treatment facilities.

B. Technology-Based Effluent Limitations

1. Scope and Authority

Section 301(b) of the CWA and implementing U.S. EPA permit regulations at 40 C.F.R. section 122.44 require that permits include conditions meeting applicable technology-based requirements at a minimum, and any more stringent effluent limitations necessary to meet applicable water quality standards. The discharge authorized by this Order must meet minimum federal technology-based requirements based on Secondary Treatment Standards at 40 C.F.R. part 133 and Best Professional Judgment (BPJ) in accordance with 40 C.F.R. section 125.3.

Regulations promulgated in 40 C.F.R. section 125.3(a)(1) require technology-based effluent limitations for municipal Dischargers to be placed in NPDES permits based on Secondary Treatment Standards or Equivalent to Secondary Treatment Standards.

The Federal Water Pollution Control Act Amendments of 1972 (PL 92-500) established the minimum performance requirements for POTW's [defined in section 304(d)(1)]. Section 301(b)(1)(B) of that Act requires that such treatment works must, as a minimum, meet effluent limitations based on secondary treatment as defined by the U.S. EPA Administrator.

Based on this statutory requirement, U.S. EPA developed secondary treatment regulations, which are specified in 40 C.F.R. part 133. These technology-based regulations apply to all municipal wastewater treatment plants and identify the minimum level of effluent quality attainable by secondary treatment in terms of biochemical oxygen demand (BOD_5), total suspended solids (TSS), and pH.

2. Applicable Technology-Based Effluent Limitations

a. **BOD_5 and TSS.** Federal regulations at 40 C.F.R. part 133, establish the minimum weekly and monthly average level of effluent quality attainable by secondary treatment for BOD_5 and TSS. A daily maximum effluent limitation for BOD_5 and TSS is also included in the Order to ensure that the treatment works are not organically overloaded and operate in accordance with design capabilities. In addition, 40 C.F.R. section 133.102, in describing the minimum level of effluent quality attainable by secondary treatment, states that the 30-day average percent removal shall not be less than 85 percent. This Order contains a limitation requiring an average of 85 percent removal of BOD_5 and TSS over each calendar month. This Order requires WQBEL's that are equal to or more stringent than the secondary technology-based treatment described in 40 C.F.R. part 133 (see section IV.C.3.b.iv of the Fact Sheet for a discussion on Pathogens which includes WQBEL's for BOD_5 and TSS).

b. **Flow.** The Facility was designed to provide a tertiary level of treatment for up to a design peak daily flow of 0.70 MGD. In the next phase of Facility expansion, the Facility will be expanded to provide treatment for effluent at a design peak daily flow of up to 0.875 MGD. Therefore, this Order contains a maximum daily discharge flow effluent limit of 0.70 MGD, and upon completion of the next phase of Facility expansion, this Order will require that the maximum daily effluent flow shall not exceed 0.875 MGD.

c. **pH.** The secondary treatment regulations at 40 C.F.R. part 133 also require that pH be maintained between 6.0 and 9.0 standard units. This Order, however, requires more stringent WQBEL's for pH to comply with the Basin Plan's water quality objectives for pH.

Summary of Technology-based Effluent Limitations
Discharge Point 001

Table F-5. Summary of Technology-based Effluent Limitations

Parameter	Units	Effluent Limitations				
		Average Monthly	Average Weekly	Maximum Daily	Instantaneous Minimum	Instantaneous Maximum
Flow	MGD	--	--	0.70	--	--
		--	--	0.875[1]	--	--
Conventional Pollutants						
Biochemical Oxygen Demand (5-day @ 20°C)[1]	mg/L	30	45	--	--	--
	lbs/day[2]	180	260	--	--	--
	lbs/day[3]	220	330	--	--	--
pH[1]	standard units	--	--	--	6.0	9.0
Total Suspended Solids[1]	mg/L	30	45	--	--	--
	lbs/day[2]	180	260	--	--	--
	lbs/day[3]	220	330	--	--	--

1 Note that more stringent WQBEL's for BOD_5, pH, and TSS are applicable and are established as final effluent limitations in this Order (see section IV.C.3.b of this Fact Sheet).

2 Based on a maximum daily effluent flow of 0.70 MGD, effective immediately and until Executive Officer's written approval of flow increase (Special Provision VI.C.6.b).

3 Based on a maximum daily effluent flow of 0.875 MGD, effective upon Executive Officer's written approval of flow increase (Special Provision VI.C.6.b).

C. Water Quality-Based Effluent Limitations (WQBEL's)

1. Scope and Authority

CWA Section 301(b) and 40 C.F.R. section 122.44(d) require that permits include limitations more stringent than applicable federal technology-based requirements where necessary to achieve applicable water quality standards. This Order contains requirements, expressed as a technology equivalence requirement, more stringent than secondary treatment requirements that are necessary to meet applicable water quality standards. The rationale for these requirements, which consist of tertiary treatment or equivalent requirements, is discussed in section VI.C.3 of this Fact Sheet.

Section 122.44(d)(1)(i) of 40 C.F.R. requires that permits include effluent limitations for all pollutants that are or may be discharged at levels that have the reasonable potential to cause or contribute to an exceedance of a water quality standard, including numeric and narrative objectives within a standard. Where reasonable potential has been established for a pollutant, but there is no numeric criterion or objective for the pollutant, WQBEL's must be established using: (1) U.S. EPA criteria guidance under CWA section 304(a), supplemented where necessary by other relevant information; (2) an indicator parameter for the pollutant of concern; or (3) a calculated numeric water quality criterion, such as a proposed state criterion or policy interpreting the state's narrative criterion, supplemented with other relevant information, as provided in section 122.44(d)(1)(vi).

The process for determining reasonable potential and calculating WQBEL's when necessary is intended to protect the designated uses of the receiving water as specified in the Basin Plan, and achieve applicable water quality objectives and criteria that are contained in other state plans and policies, or any applicable water quality criteria contained in the CTR and NTR.

2. Applicable Beneficial Uses and Water Quality Criteria and Objectives

The Basin Plan designates beneficial uses, establishes water quality objectives, and contains implementation programs and policies to achieve those objectives for all waters addressed through the plan. In addition, the Basin Plan implements State Water Board Resolution No. 88-63, which established state policy that all waters, with certain exceptions, should be considered suitable or potentially suitable for municipal or domestic supply.

The Basin Plan on page II-1.00 states: "*Protection and enhancement of existing and potential beneficial uses are primary goals of water quality planning…*" and with respect to disposal of wastewaters states that "...*disposal of wastewaters is [not] a prohibited use of waters of the State; it is merely a use which cannot be satisfied to the detriment of beneficial uses.*"

The federal CWA section 101(a)(2), states: "*it is the national goal that wherever attainable, an interim goal of water quality which provides for the protection and propagation of fish, shellfish, and wildlife, and for recreation in and on the water be achieved by July 1, 1983.*" Federal Regulations, developed to implement the requirements of the CWA, create a rebuttable presumption that all waters be designated as fishable and swimmable. Federal Regulations, 40 C.F.R. sections 131.2 and 131.10, require that all waters of the State regulated to protect the beneficial uses of public water supply, protection and propagation of fish, shell fish and wildlife, recreation in and on the water, agricultural, industrial and other purposes including navigation. 40 C.F.R. section 131.3(e) defines existing beneficial uses as those uses actually attained after 28 November 1975, whether or not they are included in the water quality standards. Federal Regulation, 40 C.F.R. section 131.10 requires that uses be obtained by implementing effluent limitations, requires that all downstream uses be protected and states that in no case shall a state adopt waste transport or waste assimilation as a beneficial use for any waters of the United States.

a. **Receiving Water and Beneficial Uses.** Orchard Creek originates approximately 5 miles east of the Facility in the western foothills of the Sierra Nevada Mountains, near the City of Lincoln. The topography in the vicinity of the outfall is gently rolling to flat. The land adjacent to the Orchard Creek riparian zone is grasslands with numerous vernal pools and ephemeral channels. The predominant land uses in the area tributary to Orchard Creek above the outfall include grazed pasture, watershed, and some developed areas. Orchard Creek is a perennial, shallow, low-gradient, sinuous, sand- to mud-bottomed third order stream. Upstream from the discharge, Orchard Creek is fed by a number of ephemeral streams. In the vicinity of the discharge, Orchard Creek is fed by a few ephemeral streams and a large vernal pool complex. Downstream from the discharge Orchard Creek is fed by a number of ephemeral streams and one perennial stream, Ingram Slough. Orchard Creek is tributary to Auburn Ravine approximately 3 miles northwest of (±5 river miles downstream from) Discharge Point 001. Auburn Ravine is a perennial stream tributary to the East Side Canal, thence Cross Canal. Cross Canal enters the Sacramento River south of the Feather River, near Verona, approximately 10 miles north of Sacramento. Refer to III.C.1.a above for a complete description of the receiving water beneficial uses.

b. **Effluent and Ambient Background Data.** The water supply for the Facility is supplied by the Placer County Water Agency (PCWA) through the Foothill/Sunset water system. The average hardness for the source water for the site and Facility is very low at 9.4 mg/L and is also moderately to highly aggressive, with an average Langelier Saturation Index (LSI) of -1.53. In order to increase the potable water hardness and reduce water distribution system corrosion, the Discharger began blending higher hardness water from an on-site well in January 2013. The change in the water supply impacts the effluent quality from the Facility. Therefore, the RPA was conducted using effluent monitoring data collected between January 2013 and August 2014. As required by Order R5-2010-0005, the Discharger collected priority pollutant monitoring quarterly during 2012, prior to the change to the water supply. For those constituents which were not monitored routinely, this data is the only data available and thus was used for the RPA. Upstream receiving water data collected between January 2012 and August 2014 was also used for the RPA.

c. **Assimilative Capacity/Mixing Zone.** As described in section IV.C.2.a of this Fact Sheet, based on available information, Orchard Creek is a perennial stream. Although dilution may be available, in the absence of a site-specific dilution/mixing zone study, the worst-case dilution is assumed to be zero to provide protection for the receiving water beneficial uses. The impact of assuming zero assimilative capacity within the receiving water is that discharge limitations are end-of-pipe limits with no allowance for dilution within the receiving water.

d. **Conversion Factors.** The CTR contains aquatic life criteria for arsenic, cadmium, chromium III, chromium VI, copper, lead, nickel, silver, and zinc which are presented in dissolved concentrations. USEPA recommends conversion factors to translate dissolved concentrations to total concentrations. The default USEPA conversion factors contained in Appendix 3 of the SIP were used to convert the applicable dissolved criteria to total recoverable criteria, except for copper. The Discharger submitted a *Copper Water-Effect Ratio Study for Orchard Creek at the Thunder Valley WWTP Discharge Outfall* in November 2007. The Discharger's study followed U.S. EPA's 2001 *Streamlined Water-Effect Ratio Procedure for Discharges of Copper* (EPA 822-R-01-005). Following the streamlined procedure, two separate sets of samples were evaluated on 4 June 2007 and 11 July 2007 to assess ambient conditions and to calculate a freshwater copper WER using the primary test species, *Ceriodaphnia dubia*. Consistent with the streamlined procedure, the Discharger used the geometric mean of the two sample WER's to calculate final site-specific WER's for dissolved and total copper. Based on the results of the study, the Discharger concluded that a dissolved WER for copper of 24.9 and a total WER for copper of 24.5, based on effluent data to represent low-flow, zero-dilution discharge conditions, were applicable to the discharge to Orchard Creek. Based on review of the Discharger's study, the Central Valley Water Board concludes that the Discharger's proposed WER's are applicable to the discharge to Orchard Creek. Copper in the discharge did not demonstrate reasonable potential to cause or contribute to an excursion above the CTR chronic criteria for the protection of freshwater aquatic life.

e. **Hardness-Dependent CTR Metals Criteria.** The *California Toxics Rule* and the *National Toxics Rule* contain water quality criteria for seven metals that vary as a function of hardness. The lower the hardness the lower the water quality criteria. The metals with hardness-dependent criteria include cadmium, copper, chromium III, lead, nickel, silver, and zinc.

This Order has established the criteria for hardness-dependent metals based on the reasonable worst-case ambient hardness as required by the SIP[1] and the CTR[2]. The SIP and the CTR require the use of "receiving water" or "actual ambient" hardness, respectively, to determine effluent limitations for these metals. (SIP, § 1.2; 40 C.F.R. § 131.38(c)(4)) The CTR requires that the hardness values used shall be consistent with the design discharge conditions for design flows and mixing zones.[3] Where design flows for aquatic life criteria include the lowest one-day flow with an average reoccurrence frequency of once in ten years (1Q10) and the lowest average seven consecutive day flow with an average reoccurrence frequency of once in ten years (7Q10).[4] The CTR also requires that when mixing zones are allowed the CTR criteria apply at the edge of the mixing zone, otherwise the criteria apply throughout the water body including at the point of discharge.[5] The CTR does not define whether the term "ambient," as applied in the regulations, necessarily requires the consideration of upstream as opposed to downstream hardness conditions.

The State Water Board provided direction regarding the selection of hardness in two precedential water quality orders; WQO 2008-0008 for the City of Davis Wastewater Treatment Plant and WQO 2004-0013 for the Yuba City Wastewater Treatment Plant. The State Water Board recognized that the SIP and the CTR do not discuss the manner in which hardness is to be ascertained, thus regional water boards have considerable discretion in determining ambient hardness. (Davis Order, p.10). The State Water Board explained that it is necessary that, "*The [hardness] value selected should provide protection for all times of discharge under varying hardness conditions*." (Yuba City Order, p. 8). The Davis Order also provides that, "*Regardless of the hardness used, the resulting limits must always be protective of water quality criteria under all flow conditions*." (Davis Order, p. 11).

The equation describing the total recoverable regulatory criterion, as established in the CTR[6], is as follows:

$$\text{CTR Criterion} = \text{WER} \times (e^{m[\ln(H)]+b}) \quad \text{(Equation 1)}$$

Where:

H = ambient hardness (as $CaCO_3$)[7]

WER = water-effect ratio

m, b = metal- and criterion-specific constants

[1] The SIP does not address how to determine the hardness for application to the equations for the protection of aquatic life when using hardness-dependent metals criteria. It simply states, in Section 1.2, that the criteria shall be properly adjusted for hardness using the hardness of the receiving water.
[2] The CTR requires that, for waters with a hardness of 400 mg/L (as $CaCO_3$), or less, the actual ambient hardness of the surface water must be used.
[3] 40 C.F.R. 131.38 § (c)(4)(ii)
[4] 40 C.F.R. 131.38 § (c)(4)(iii) Table 4
[5] 40 C.F.R. 131.38 § (c)(2)(i)
[6] 40 C.F.R. § 131.38(b)(2).
[7] For this discussion all hardness values are measured as $CaCO_3$.

The upstream receiving water hardness varied from 36 mg/L to 140 mg/L, based on 33 samples from January 2012 to August 2014. Downstream receiving water hardness varied from 23 mg/L to 130 mg/L, based on 29 samples from January 2012 to August 2014. During portions of the year, however, Orchard Creek is effluent dominated, so the downstream ambient hardness that is consistent with the design low flow conditions is equivalent to the effluent hardness, because the effluent is, in effect, the ambient surface water under these regularly occurring conditions. The effluent hardness varied from 33 mg/L to 61 mg/L, based on 20 samples from January 2013 to August 2014.

For calculating the CTR criteria the downstream ambient hardness has been used. The SIP, CTR, and State Water Board do not require use of the minimum observed ambient hardness in the CTR equations. The hardness used must be consistent with design conditions and protective of water quality criteria under all flow conditions. The minimum effluent hardness of 33 mg/L represents the downstream ambient hardness under the design condition and was considered for use in the CTR equations.

A downstream ambient hardness of 33 mg/L results in CTR criteria that are protective of aquatic life under all flow conditions for copper, zinc, chromium III, nickel, lead, silver, and cadmium

The Facility discharges both hardness and metals, which must be considered in the downstream ambient receiving water to ensure the criteria are protective under all flow conditions. The tables below examine how the downstream ambient conditions change with varying mixtures of effluent and upstream receiving water. The calculations determine whether or not toxicity could result from one or more metals using the selected design ambient hardness to calculate the CTR criteria.

A simple mass balance (Equation 2) is used to model the ambient concentrations of hardness and metals in the receiving water downstream of the discharge for all possible mixtures of effluent and upstream receiving water under all flow conditions.

$$C_{downstream} = C_{upstream} \times (1\text{-}MIX) + C_{effluent} \times (MIX) \quad \text{(Equation 2)}$$ [1]

Where:

$C_{downstream}$ = Downstream receiving water concentration

$C_{upstream}$ = Upstream receiving water concentration

$C_{effluent}$ = Effluent concentration

MIX = Fraction of effluent in downstream ambient receiving water

For each of several downstream ambient mixtures of upstream receiving water and effluent, the potential for toxicity is examined. The hardness of the mixture is calculated, and the resultant water quality criterion is calculated from the CTR equation. The metals concentration is also calculated for the mixture of upstream receiving water and effluent. If the metals concentration complies with the CTR criterion for that mixture, the ambient mixture is not toxic, and “Yes” is indicated in the far right column. If the metals concentration exceeds the CTR criterion for that mixture, the ambient concentration is toxic, and “No” is indicated in the far right column. The results of these evaluations are summarized in Table F-14.

For this evaluation the following conservative assumptions have been made:

[1] USEPA NPDES Permit Writers’ Manual, September 2010 (EPA-833-K-10-001).

- Upstream receiving water at the lowest observed upstream receiving water hardness (i.e., 36 mg/L).
- No assimilative capacity for each metal in the upstream receiving water (i.e., metals concentration equal to CTR criteria calculated using a hardness of 36 mg/L).
- Effluent hardness at the lowest observed effluent hardness of 33 mg/L.

The following tables (F-6 through F-13) demonstrate that the selected design ambient hardness used to calculate the CTR criteria result in protective criteria for all flow conditions (i.e., the mixed downstream ambient metals concentrations do not exceed the CTR criteria). Table F-14 summarizes the design ambient hardness for each metal.

Table F-6. Lead Evaluation (Design Ambient Hardness = 33 mg/L)

Assumed Upstream Receiving Water Lead Concentration					**0.87 µg/L[1]**
				Lead Chronic Criterion[2]	**0.78 µg/L**
Mix[6]		**Mixed Downstream Ambient Concentration**			**Complies with CTR Criteria**
		Hardness [3] (mg/L)	**CTR Criteria [4] (µg/L)**	**Lead [5] (µg/L)**	
High Flow	1%	36	0.87	0.87	**Yes**
	5%	36	0.86	0.86	**Yes**
	15%	36	0.85	0.85	**Yes**
	25%	35	0.84	0.84	**Yes**
	50%	35	0.82	0.82	**Yes**
	75%	34	0.80	0.80	**Yes**
Low Flow	100%	33	0.78	0.78	**Yes**

Table F-7. Copper Evaluation (Design Ambient Hardness = 33 mg/L)

Assumed Upstream Receiving Water Copper Concentration					**3.9 µg/L[1]**
				Copper Chronic Criterion[2]	**3.6 µg/L**
Mix[6]		**Mixed Downstream Ambient Concentration**			**Complies with CTR Criteria**
		Hardness [3] (mg/L)	**CTR Criteria [4] (µg/L)**	**Copper [5] (µg/L)**	
High Flow	1%	36	3.9	3.9	**Yes**
	5%	36	3.9	3.9	**Yes**
	15%	36	3.9	3.9	**Yes**
	25%	35	3.8	3.8	**Yes**
	50%	35	3.8	3.8	**Yes**
	75%	34	3.7	3.7	**Yes**
Low Flow	100%	33	3.6	3.6	**Yes**

Table F-8. Chromium III Evaluation (Design Ambient Hardness = 33 mg/L)

Assumed Upstream Receiving Water Chromium III Concentration					90 µg/L[1]
				Chromium III Chronic Criterion[2]	84 µg/L
Mix[6]		Mixed Downstream Ambient Concentration			Complies with CTR Criteria
		Hardness [3] (mg/L)	CTR Criteria [4] (µg/L)	Chromium III [5] (µg/L)	
High Flow	1%	36	90	90	Yes
	5%	36	89	89	Yes
	15%	36	89	89	Yes
	25%	35	88	88	Yes
	50%	35	87	87	Yes
Low Flow	75%	34	85	85	Yes
	100%	33	84	84	Yes

Table F-9. Cadmium (Chronic) Evaluation (Design Ambient Hardness = 33 mg/L)

Assumed Upstream Receiving Water Cadmium Concentration					1.1 µg/L[1]
				Cadmium Chronic Criterion[2]	1.0 µg/L
Mix[6]		Mixed Downstream Ambient Concentration			Complies with CTR Criteria
		Hardness [3] (mg/L)	CTR Criteria [4] (µg/L)	Cadmium [5] (µg/L)	
High Flow	1%	36	1.1	1.1	Yes
	5%	36	1.1	1.1	Yes
	15%	36	1.1	1.1	Yes
	25%	35	1.1	1.1	Yes
	50%	35	1.1	1.1	Yes
Low Flow	75%	34	1.1	1.1	Yes
	100%	33	1.0	1.0	Yes

Table F-10. Cadmium (Acute) Evaluation (Design Ambient Hardness = 33 mg/L)

Assumed Upstream Receiving Water Cadmium Concentration					1.4 µg/L[1]
				Cadmium Acute Criterion[2]	1.3 µg/L
Mix[6]		Mixed Downstream Ambient Concentration			Complies with CTR Criteria
		Hardness [3] (mg/L)	CTR Criteria [4] (µg/L)	Cadmium [5] (µg/L)	
High Flow	1%	36	1.4	1.4	Yes
	5%	36	1.4	1.4	Yes
	15%	36	1.4	1.4	Yes
	25%	35	1.4	1.4	Yes
	50%	35	1.4	1.4	Yes
Low Flow	75%	34	1.3	1.3	Yes
	100%	33	1.3	1.3	Yes

Table F-11. Nickel Evaluation (Design Ambient Hardness = 33 mg/L)

Assumed Upstream Receiving Water Nickel Concentration					22 µg/L[1]
				Nickel Chronic Criterion[2]	20 µg/L
Mix[6]		Mixed Downstream Ambient Concentration			Complies with CTR Criteria
		Hardness [3] (mg/L)	CTR Criteria [4] (µg/L)	Nickel [5] (µg/L)	
High Flow	1%	36	22	22	Yes
	5%	36	22	22	Yes
	15%	36	22	22	Yes
	25%	35	22	22	Yes
	50%	35	21	21	Yes
Low Flow	75%	34	21	21	Yes
	100%	33	20	20	Yes

Table F-12. Silver (Acute) Evaluation (Design Ambient Hardness = 33 mg/L)

Assumed Upstream Receiving Water Silver Concentration					0.70 µg/L[1]
				Silver Acute Criterion[2]	0.60 µg/L
Mix[6]		Mixed Downstream Ambient Concentration			Complies with CTR Criteria
		Hardness [3] (mg/L)	CTR Criteria [4] (µg/L)	Silver [5] (µg/L)	
High Flow	1%	36	0.70	0.70	Yes
	5%	36	0.70	0.70	Yes
	15%	36	0.69	0.69	Yes
	25%	35	0.68	0.68	Yes
	50%	35	0.65	0.65	Yes
Low Flow	75%	34	0.63	0.63	Yes
	100%	33	0.60	0.60	Yes

Table F-13. Zinc Evaluation (Design Ambient Hardness = 33 mg/L)

Assumed Upstream Receiving Water Zinc Concentration					**50 µg/L[1]**
Zinc Chronic Criterion[2]					**47 µg/L**
Mix[6]		**Mixed Downstream Ambient Concentration**			**Complies with CTR Criteria**
		Hardness [3] (mg/L)	**CTR Criteria [4] (µg/L)**	**Zinc [5] (µg/L)**	
High Flow	1%	36	50.4	50.4	**Yes**
	5%	36	50.2	50.2	**Yes**
	15%	36	50	50	**Yes**
	25%	35	50	50	**Yes**
	50%	35	49	49	**Yes**
	75%	34	48	48	**Yes**
Low Flow	100%	33	47	47	**Yes**

Footnotes for CTR Hardness-dependent Metals Tables (F-7 through F-14)

1 Highest assumed upstream receiving water metals concentration calculated using CTR equation (Equation 1) for chronic/ acute criterion at a hardness of 36 mg/L.

2 CTR Criteria calculated using CTR equation (Equation 1) for chronic/acute criterion at the design ambient hardness for the particular metal (see Table F-14).

3 Mixed downstream ambient hardness is the mixture of the receiving water and effluent hardness at the applicable mixture using Equation 2.

4 Mixed downstream ambient criteria are the chronic/acute criteria calculated using the CTR equation (Equation 1) at the mixed hardness.

5 Mixed downstream ambient metals concentration is the mixture of the receiving water and effluent metals concentrations at the applicable mixture using Equation 2.

6 The mixture percentage represents the fraction of effluent in the downstream ambient receiving water. The mixture ranges from 1% at the high receiving water flow condition, to 100% at the lowest receiving water flow condition (i.e., effluent dominated).

The applicable design ambient hardness and CTR criteria for the hardness-dependent metals for which toxicity in ambient waters does not occur are as follows in Table F-14.

Table F-14. Summary of Design Ambient Hardness and CTR Criteria for Hardness-dependent Metals

CTR Metals	**Design Ambient Hardness (mg/L)**	**CTR Criteria (µg/L, total recoverable)[1]**	
		acute	**chronic**
Copper	33	120[2]	88[2]
Chromium III	33	700	83
Cadmium	33	1.3	1.0
Lead	33	20	0.78
Nickel	33	180	20
Silver	33	0.60	--
Zinc	33	47	47

1 Metal criteria rounded to two significant figures in accordance with the CTR.

2 Calculated using a water effects ratio (WER) of 24.5 as discussed further in section IV.C.3.a.iii.

3. Determining the Need for WQBEL's

a. **Constituents with No Reasonable Potential.** WQBEL's are not included in this Order for constituents that do not demonstrate reasonable potential (i.e., constituents were not detected in the effluent or receiving water); however, monitoring for those pollutants is established in this Order as required by the SIP. If the results of effluent monitoring demonstrate reasonable potential, this Order may be reopened and modified by adding an appropriate effluent limitation.

Most constituents with no reasonable potential are not discussed in this Order. However, the following constituents were found to have no reasonable potential after assessment of the data:

i. **Aluminum**

Aluminum is the third most abundant element in the earth's crust and is ubiquitous in both soils and aquatic sediments. When mobilized in surface waters, aluminum has been shown to be toxic to various fish species. However, the potential for aluminum toxicity in surface waters is directly related to the chemical form of aluminum present, and the chemical form is highly dependent on water quality characteristics that ultimately determine the mechanism of aluminum toxicity. Surface water characteristics, including pH, temperature, colloidal material, fluoride and sulfate concentrations, and total organic carbon, all influence aluminum speciation and its subsequent bioavailability to aquatic life. Calcium [hardness] concentrations in surface water may also reduce aluminum toxicity by competing with monomeric aluminum (Al^{3+}) binding to negatively charged fish gills.

(a) **WQO**. The State Water Board, Division of Drinking Water (DDW, formerly the Department of Public Health) has established Secondary MCL's to assist public drinking water systems in managing their drinking water for aesthetic conditions such as taste, color, and odor. The Secondary MCL for aluminum is 200 µg/L for protection of the MUN beneficial use. Title 22 requires compliance with Secondary MCL's on an annual average basis.

Title 40 of the Code of Federal Regulations promulgated criteria for priority toxic pollutants for California's surface waters as part of section 131.38. Establishment of Numeric Criteria for Priority Toxic Pollutants for the State of California (California Toxics Rule or CTR), including metals criteria. However, aluminum criteria were not promulgated as part of the CTR. Absent numeric aquatic life criteria for aluminum, WQBEL's in the Central Valley Region's NPDES permits are based on the Basin Plans' narrative toxicity objective. The Basin Plans' *Policy for Application of Water Quality Objectives* requires the Central Valley Water Board to consider, "*on a case-by-case basis, direct evidence of beneficial use impacts, all material and relevant information submitted by the discharger and other interested parties, and relevant numerical criteria and guidelines developed and/or published by other agencies and organizations. In considering such criteria, the Board evaluates whether the specific numerical criteria which are available through these sources and through other information supplied to the Board, are relevant and appropriate to the situation at hand and, therefore, should be used in determining compliance with the narrative objective*." Relevant information includes, but is not limited to (1) U.S. EPA Ambient Water Quality Criteria (NAWQC) and subsequent Correction, (2) site-specific conditions of Orchard Creek, the receiving

water, and (3) site-specific aluminum studies conducted by dischargers within the Central Valley Region. (Basin Plan, p.IV-17.00; see also, 40 C.F.R. §122.44(d)(vi).)

U.S. EPA NAWQC. U.S. EPA recommended the NAWQC aluminum acute criterion at 750 µg/L based on test waters with a pH of 6.5 to 9.0. U.S. EPA also recommended the NAWQC aluminum chronic criterion at 87 µg/L based upon the following two toxicity tests. All test waters contained hardness at 12 mg/L as $CaCO_3$.

(1) Acute toxicity tests at various aluminum doses were conducted in various acidic waters (pH 6.0 – 6.5) on 159- and 160-day old striped bass. The 159-day old striped bass showed no mortality in waters with pH at 6.5 and aluminum doses at 390 µg/L, and the 160-day old striped bass showed 58% mortality at a dose of 174.4 µg/L in same pH waters. However, the 160-day old striped bass showed 98% mortality at an aluminum dose of 87.2 µg/L in waters with pH at 6.0, which is U.S. EPA's basis for the 87 µg/L chronic criterion. The varied results draw into question this study and the applicability of the NAWQC chronic criterion of 87 µg/L.

(2) Chronic toxicity effects on 60-day old brook trout were evaluated in circumneutral pH waters (6.5-6.9 pH) in five cells at various aluminum doses (4, 57, 88, 169, and 350 µg/L). Chronic evaluation started upon hatching of eyed eggs of brook trout, and their weight and length were measured after 45 days and 60 days. The 60-day old brook trout showed 24% weight loss at 169 µg/L of aluminum and 4% weight loss at 88 µg/L of aluminum, which is the basis for U.S. EPA's chronic criteria. Though this test study shows chronic toxic effects of 4% reduction in weight after exposure for 60-days, the chronic criterion is based on 4-day exposure; so again, the applicability of the NAWQC chronic criterion of 87 µg/L is questionable.

Site-specific Conditions. U.S. EPA advises that a water effects ratio (WER) may be more appropriate to better reflect the actual toxicity of aluminum to aquatic organisms when the pH and hardness conditions of the receiving water are not similar to that of the test conditions[1]. Effluent and Orchard Creek monitoring data indicate that the pH and hardness values are occasionally similar to the low pH and hardness conditions under which the chronic criterion for aluminum was developed, as shown in the table below. The pH of the Orchard Creek, the receiving water, ranged from 6.0 to 8.2 with a median of 7.4 based on 130 monitoring results obtained between January 2012 and August 2014. These water conditions typically are circumneutral pH where aluminum is predominately in the form of $Al(OH)_3$ and non-toxic to aquatic life. The hardness of Orchard Creek ranged from 36 mg/L to 140 mg/L, based on 33 samples from January 2012 and August 2014. These conditions are similar to the conditions used for the development of the NAWQC chronic

[1] "*The value of 87 micro-g/L is based on a toxicity test with striped bass in water with pH = 6.5-6.6 and hardness <10 mg/L. Data in* [a 1994 Study] *indicate that aluminum is substantially less toxic at higher pH and hardness, but the effects of pH and hardness are not well quantified at this time*." U.S. EPA 1999 NAWQC Correction, Footnote L

criterion. Therefore, this Order uses the 87 µg/L chronic criterion to implement the Basin Plan's narrative toxicity objective.

Parameter	Units	Test Conditions for Applicability of Chronic Criterion	Effluent	Receiving Water
pH	standard units	6.0 – 6.5	6.65 – 7.96	6.0 – 8.2
Hardness, Total (as $CaCO_3$)	mg/L	12	33 – 61	36 – 140
Aluminum, Total Recoverable	µg/L	87.2 - 390	<50 – 58	230 – 640

(b) **RPA Results.** For priority pollutants, the SIP dictates the procedures for conducting the RPA. Aluminum is not a priority pollutant. Therefore, the Central Valley Water Board is not restricted to one particular RPA method. Due to the site-specific conditions of the discharge, the Central Valley Water Board has used its judgment in determining the appropriate method for conducting the RPA for this non-priority pollutant constituent. The most stringent objective is the NAWQC chronic criterion. The RPA was conducted based on the maximum observed effluent aluminum concentration.

The maximum observed effluent aluminum concentration was 58 µg/L based on 21 samples collected between January 2013 and August 2014. Therefore, the Central Valley Water Board finds the discharge does not have reasonable potential to cause or contribute to an exceedance in the receiving water and the Facility is adequately controlling the discharge of aluminum. Since the discharge does not demonstrate reasonable potential, the effluent limitations for aluminum have not been retained in this Order. Removal of these effluent limitations is in accordance with federal anti-backsliding regulations (see section IV.D.3 of the Fact Sheet).

ii. **Cadmium**

(a) **WQO.** The CTR includes hardness dependent criteria for the protection of freshwater aquatic life for cadmium. These criteria for cadmium are presented in dissolved concentrations, as 1-hour acute criteria and 4-day chronic criteria. U.S. EPA recommends conversion factors to translate dissolved concentrations to total concentrations. Default U.S. EPA conversion factors were used for the receiving water and the effluent. As described in section IV.C.2.e of this Fact Sheet, the applicable acute (1-hour average) and chronic (4-day average) criteria for cadmium in the effluent are 1.3 µg/L and 1.0 µg/L, respectively, as total recoverable. Order R5-2010-0005 included effluent limitations for cadmium based on the CTR criteria.

(b) **RPA Results.** The MEC for cadmium was 0.045 µg/L based on 20 samples collected between January 2013 and August 2014. The maximum observed cadmium concentration in the upstream receiving water was 0.87 µg/L based on four samples collected between January 2012 and August 2014. Therefore, cadmium in the discharge does not demonstrate reasonable potential to cause or contribute to an in-stream excursion above the CTR chronic criterion of 1.0 µg/L, and the WQBEL's for cadmium have not been retained in this Order. Removal of these effluent limitations is in accordance with federal anti-backsliding regulations (see section IV.D.3 of the Fact Sheet).

iii. **Chlorine Residual**

(a) **WQO.** USEPA developed NAWQC for protection of freshwater aquatic life for chlorine residual. The recommended 4-day average (chronic) and 1-hour average (acute) criteria for chlorine residual are 0.011 mg/L and 0.019 mg/L, respectively. These criteria are protective of the Basin Plan's narrative toxicity objective. Order R5-2010-0005 included effluent limitations for chlorine residual based on the NAWQC.

(b) **RPA Results.** In Order R5-2010-0005, the Central Valley Water Board determined that the discharge had reasonable potential to cause or contribute to an exceedance of the NAWQC based on the use of sodium hypochlorite during cleaning of the membranes. However, the Discharger provided additional information regarding the operational protocol for cleaning the membranes on 3 March 2015 and 5 March 2015. As described further in section II.A of this Fact Sheet, the Discharger does not discharge to Orchard Creek during cleaning operations, and directs filter permeate to the recycled water storage tank for a set period following cleaning to ensure that chlorine levels are acceptable prior to initiating discharges to Orchard Creek. Based on the operational protocol for cleaning the membranes, the Central Valley Water Board finds that the discharge does not demonstrate reasonable potential to cause or contribute to an in-stream excursion above the NAWQC, and the WQBEL's for chlorine have not been retained in this Order. Removal of these effluent limitations is in accordance with federal anti-backsliding regulations (see section IV.D.3 of the Fact Sheet).

iv. **Copper**

(a) **WQO**. The CTR includes hardness dependent criteria for the protection of freshwater aquatic life for copper. These criteria for copper are presented in dissolved concentrations, as 1-hour acute criteria and 4-day chronic criteria. U.S. EPA recommends conversion factors to translate dissolved concentrations to total concentrations. Default U.S. EPA conversion factors were used for the receiving water and the effluent.

Order R5-2010-0005 allowed for a total recoverable water effects ratio (WER) of 24.5 to calculate the aquatic life criteria for copper based on the Discharger's *Copper Water-Effect Ratio Study for Orchard Creek at the Thunder Valley WWTP Discharge Outfall* (November 2007). The Discharger's study followed U.S. EPA's 2001 *Streamlined Water-Effect Ratio Procedure for Discharges of Copper* (EPA 822-R-01-005). Consistent with Order R5-2010-0005, the aquatic life criteria for copper were calculated using a total recoverable WER of 24.5.

Using the default conversion factors, ambient hardness as described in section VI.C.2.e of this Fact Sheet, and site-specific WER of 24.5, the applicable acute (1-hour average) and chronic (4-day average) criteria are 120 µg/L and 88 µg/L, respectively, as total recoverable.

(b) **RPA Results**. The MEC for copper was 7.8 µg/L (as total recoverable) based on four samples collected between January 2013 and August 2014. The maximum observed upstream receiving water concentration was 2.9 µg/L based on four samples collected between January 2012 and August 2014. Therefore, copper in the discharge does not have a reasonable potential to cause or contribute to an in-stream excursion above the CTR criteria for the protection of freshwater aquatic life.

v. **Cyanide**

(a) **WQO.** The CTR includes maximum 1-hour average and 4-day average criteria of 22 µg/L and 5.2 µg/L, respectively, for the protection of freshwater aquatic life for cyanide.

(b) **RPA Results.** The MEC for cyanide was 7.0 µg/L based on four samples collected between January 2013 and August 2014. The maximum observed cyanide concentration in the upstream receiving water was 10 µg/L based on four samples collected between January 2012 and August 2014. However, cyanide was not detected in the remaining three samples, as shown below.

Sample Date	Effluent Cyanide (µg/L)	Receiving Water Cyanide (µg/L)
1 January 2012	ND	ND
24 April 2012	ND	ND
26 July 2012	ND	ND
18 October 2012	7	10

The laboratory reports for the detected effluent and receiving water samples collected on 18 October 2012 included a qualifier (QM-4X) indicating that "*The spike recovery was outside of QC acceptance limits for the MS and/or MSD due to analyte concentration at 4 times or greater the spike concentration. The QC batch was accepted based on LCS or LCSD recoveries within the acceptance limits*." SIP section 1.2 requires that the Regional Board use all available, valid, relevant, representative data and information, as determined by the Regional Board, to implement the SIP. SIP section 1.2 further states that the Regional Board has the discretion to consider if any data are inappropriate or insufficient for use in implementing the SIP. Therefore, in accordance with section 1.2 of the SIP, the Central Valley Water Board has determined that the effluent result of 7 µg/L collected on 18 October 2012 is not representative of the discharge from the Facility. The remaining three effluent cyanide samples were not detected in the effluent. Therefore, cyanide in the discharge does not demonstrate reasonable potential to cause or contribute to an in-stream excursion above the CTR chronic criterion of 5.2 µg/L, and the WQBEL's for cyanide have not been established in this Order.

vi. **Iron**

(a) **WQO**. The Secondary MCL – Consumer Acceptance Limit for iron is 300 µg/L, which is used to implement the Basin Plans chemical constituent objective for the protection of municipal and domestic supply. Order R5-2010-0005 included an effluent limitation for iron based on the Secondary MCL – Consumer Acceptance Limit.

(b) **RPA Results**. For priority pollutants, the SIP dictates the procedures for conducting the RPA. Iron is not a priority pollutant. Therefore, the Central Valley Water Board is not restricted to one particular RPA method. Due to the site-specific conditions of the discharge, the Central Valley Water Board has used its judgment in determining the appropriate method for conducting the RPA for this non-priority pollutant constituent. The most stringent objective is the Secondary MCL, which is derived from human welfare considerations (e.g., taste, odor, laundry staining), not for toxicity. Secondary MCL's are drinking water standards contained in Title 22 of the California Code of Regulations. Title 22 requires compliance with these standards on an annual average basis, when sampling at least quarterly. To be consistent with how compliance with the standards is determined, the RPA was conducted based on the calendar year annual average effluent iron concentrations.

The maximum observed annual average iron concentration in the effluent was 48 µg/L based on 20 samples collected between January 2013 and August 2014. Therefore, the Central Valley Water Board finds that iron in the discharge does not demonstrate reasonable potential to cause or contribute to an in-stream excursion above the Secondary MCL of 300 µg/L and the Facility is adequately controlling the discharge of iron. Since the discharge does not demonstrate reasonable potential, the effluent limitation for iron has not been retained in this Order. Removal of this effluent limitation is in accordance with federal antibacksliding regulations (see section IV.D.3 of the Fact Sheet).

vii. **Lead**

(a) **WQO.** The CTR includes hardness-dependent criteria for the protection of freshwater aquatic life for lead. These criteria for lead are presented in dissolved concentrations, as 1-hour acute criteria and 4-day chronic criteria. U.S. EPA recommends conversion factors to translate dissolved concentrations to total concentrations. Default U.S. EPA translators were used for the receiving water and effluent. As discussed in section IV.C.2.e of this Fact Sheet, the applicable acute and chronic criteria for lead are 20 µg/L and 0.78 µg/L, respectively. Order R5-2010-0005 included effluent limitations for lead based on the CTR criteria.

(b) **RPA Results.** The MEC for lead was 0.2 µg/L based on 20 samples collected between January 2013 and August 2014. The maximum observed upstream receiving was concentration for lead was 0.53 µg/L based on four samples collected between January 2012 and August 2014. Therefore, lead in the discharge does not demonstrate reasonable potential to cause or contribute to an in-stream excursion above the CTR criteria, and the WQBEL's for lead have not been retained in this Order. Removal of these effluent limitations is in accordance with federal anti-backsliding regulations (see section IV.D.3 of the Fact Sheet).

viii. **Manganese**

(a) **WQO**. The Secondary MCL – Consumer Acceptance Limit for manganese is 50 µg/L, which is used to implement the Basin Plans chemical constituent objective for the protection of municipal and domestic supply. Order R5-2010-0005 included an effluent limitation for manganese based on the Secondary MCL – Consumer Acceptance Limit.

(b) **RPA Results**. For priority pollutants, the SIP dictates the procedures for conducting the RPA. Manganese is not a priority pollutant. Therefore, the Central Valley Water Board is not restricted to one particular RPA method. Due to the site-specific conditions of the discharge, the Central Valley Water Board has used its judgment in determining the appropriate method for conducting the RPA for this non-priority pollutant constituent. The most stringent objective is the Secondary MCL, which is derived from human welfare considerations (e.g., taste, odor, laundry staining), not for toxicity. Secondary MCL's are drinking water standards contained in Title 22 of the California Code of Regulations. Title 22 requires compliance with these standards on an annual average basis, when sampling at least quarterly. To be consistent with how compliance with the standards is determined, the RPA was conducted based on the calendar year annual average effluent manganese concentrations.

The maximum observed annual average manganese concentration in the effluent was 18 µg/L based on 20 samples collected between January 2012 and August 2014. Therefore, the Central Valley Water Board finds that manganese in the discharge does not demonstrate reasonable potential to cause or contribute to an in-stream excursion above the Secondary MCL of 50 µg/L, and the Facility is adequately controlling the discharge of manganese. Since the discharge does not demonstrate reasonable potential, the effluent limitation for manganese has not been retained in this Order. Removal of this effluent limitation is in accordance with federal antibacksliding regulations (see section IV.D.3 of the Fact Sheet).

ix. **Persistent Chlorinated Hydrocarbon Pesticides**

(a) **WQO.** The Basin Plan requires that no individual pesticides shall be present in concentrations that adversely affect beneficial uses; discharges shall not result in pesticide concentrations in bottom sediments or aquatic life that adversely affect beneficial uses; persistent chlorinated hydrocarbon pesticides shall not be present in the water column at detectable concentrations; and pesticide concentrations shall not exceed those allowable by applicable antidegradation policies. Persistent chlorinated hydrocarbon pesticides include aldrin; alpha-BHC; beta-BHC; gamma-BHC; delta-BHC; chlordane; 4,4-DDT; 4,4-DDE; 4,4-DDD; dieldrin; alpha-endosulfan; beta-endosulfan; endosulfan sulfate; endrin; endrin aldehyde; heptachlor; heptachlor epoxide; and toxaphene. No numeric criteria are provided for delta-BHC, and the CTR provides criteria for endrin aldehyde based on the protection of human health of an acute and chronic criteria of 0.76 µg/L and 0.81 µg/L, respectively. Order R5-2010-0005 included effluent limitations for delta-BHC and endrin aldehyde.

(b) **RPA Results.** Delta-BHC and endrin aldehyde were not detected in the effluent in based on 20 samples collected between January 2013 and August 2014. Delta-BHC and endrin aldehyde were not detected in the receiving water based on four samples, respectively, collected between January 2012 and August 2014. Therefore, delta-BHC and endrin aldehyde do not demonstrate reasonable potential to cause or contribute to an in-stream excursion above the Basin Plan objective or CTR criteria and the effluent limitations have not been retained in this Order. Removal of these effluent limitations is in accordance with federal antibacksliding regulations (see section IV.D.3 of the Fact Sheet).

x. **Salinity**

(a) **WQO.** The Basin Plan contains a chemical constituent objective that incorporates state MCL's, contains a narrative objective, and contains numeric water quality objectives for certain specified water bodies for electrical conductivity, total dissolved solids, sulfate, and chloride. The U.S. EPA Ambient Water Quality Criteria for Chloride recommends acute and chronic criteria for the protection of aquatic life. There are no U.S. EPA water quality criteria for the protection of aquatic life for electrical conductivity, total dissolved solids, and sulfate. Additionally, there are no U.S. EPA numeric water quality criteria for the protection of agricultural, livestock, and industrial uses. Numeric values for the protection of these uses are typically based on site specific conditions and evaluations to determine the appropriate constituent threshold necessary to interpret the narrative chemical constituent Basin Plan objective. The Central Valley Water Board must determine the applicable numeric limit to implement the narrative objective for the protection of agricultural supply. The Central Valley Water Board is currently implementing the CV-SALTS initiative to develop a Basin Plan Amendment that will establish a salt and nitrate Management Plan for the Central Valley. Through this effort the Basin Plan will be amended to define how the narrative water quality objective is to be interpreted for the protection of agricultural use. All studies conducted through this Order to establish an agricultural limit to implement the narrative objective will be reviewed by and consistent with the efforts currently underway by CV-SALTS.

Table F-15. Salinity Water Quality Criteria/Objectives

Parameter	Agricultural WQ Objective[1]	Secondary MCL[2]	U.S. EPA NAWQC	Effluent	
				Average[3]	Maximum
EC (µmhos/cm)	Varies[2]	900, 1600, 2200	N/A	621[4]	720[4]
TDS (mg/L)	Varies	500, 1000, 1500	N/A	332[4]	360[4]
Sulfate (mg/L)	Varies	250, 500, 600	N/A	13[5]	14[5]
Chloride (mg/L)	Varies	250, 500, 600	860 1-hr 230 4-day	49[5]	51[5]

1 Narrative chemical constituent objective of the Basin Plan. Procedures for establishing the applicable numeric limitation to implement the narrative objective can be found in the Policy for Application of Water Quality, Chapter IV, Section 8 of the Basin Plan. However, the Basin Plan does not require improvement over naturally occurring background concentrations. In cases where the natural background concentration of a particular constituent exceeds an applicable water quality objective, the natural background concentration will be considered to comply with the objective.
2 The Secondary MCLs are stated as a recommended level, upper level, and a short-term maximum level.
3 Maximum calendar annual average.
4 Represents monitoring data collected since the change in water supply (i.e., after January 2013).
5 Monitoring data is not available since the change in water supply. Represents monitoring data collected in 2012.

(1) **Chloride.** The Secondary MCL for chloride is 250 mg/L, as a recommended level, 500 mg/L as an upper level, and 600 mg/L as a short-term maximum.

(2) **Electrical Conductivity.** The Secondary MCL for electrical conductivity is 900 µmhos/cm as a recommended level, 1600 µmhos/cm as an upper level, and 2200 µmhos/cm as a short-term maximum. Order R5-2010-0005 included an effluent limitation for electrical conductivity based on the agricultural water goal.

(3) **Sulfate.** The Secondary MCL for sulfate is 250 mg/L as a recommended level, 500 mg/L as an upper level, and 600 mg/L as a short-term maximum.

(4) **Total Dissolved Solids.** The Secondary MCL for total dissolved solids is 500 mg/L as a recommended level, 1000 mg/L as an upper level, and 1500 mg/L as a short-term maximum.

(b) **RPA Results**

(1) **Chloride.** Chloride concentrations in the effluent ranged from 45 mg/L to 51 mg/L, with an average of 49 mg/L based on four samples collected between January 2013 and August 2014. Background concentrations in Orchard Creek ranged from 3.1 mg/L to 14 mg/L, with an average of 8.3 mg/L, for four samples collected by the Discharger from January 2012 through October 2012. These levels do not exceed the Secondary MCL.

(2) **Electrical Conductivity.** A review of the Discharger's monitoring reports shows a maximum annual average effluent electrical conductivity of 621 µmhos/cm, with a range from 280 µmhos/cm to 720 µmhos/cm based on 261 samples collected between January 2013 and August 2014. These levels do not exceed the

Secondary MCL. The maximum annual background receiving water EC averaged 189 µmhos/cm based on 126 samples collected between January 2012 and August 2014.

(3) **Sulfate.** Sulfate concentrations in the effluent ranged from 12 mg/L to 14 mg/L, with an average of 13 mg/L based on four samples collected between January 2013 and August 2014. Background concentrations in Orchard Creek ranged from 2.7 mg/L to 12 mg/L, with an average of 6.1 mg/L based on four samples collected between January 2012 and August 2014. These levels do not exceed the Secondary MCL.

(4) **Total Dissolved Solids.** The average TDS effluent concentration was 328 mg/L with concentrations ranging from 280 mg/L to 360 mg/L based on 21 samples collected between January 2013 and August 2014. The background receiving water TDS ranged from not detected to 160 mg/L, with an average of 118 mg/L based on four samples collected between January 2012 and August 2014. These levels do not exceed the Secondary MCL.

(c) **WQBEL's.** Based on the low reported salinity, the discharge does not have reasonable potential to cause or contribute to an in-stream excursion of water quality objectives for salinity and the effluent limitation for electrical conductivity has not been retained in this Order. In order to ensure that the Discharger will continue to control the discharge of salinity, this Order includes a requirement to continue to implement a salinity evaluation and minimization plan. Removal of this effluent limitation is in accordance with federal antibacksliding regulations (see section IV.D.3 of the Fact Sheet) and water supply monitoring is required to evaluate the relative contribution of salinity from the source water to the effluent.

xi. **Zinc**

(a) **WQO.** The CTR includes hardness-dependent criteria for the protection of freshwater aquatic life for zinc. These criteria for zinc are presented in dissolved concentrations, as 1-hour acute criteria and 4-day chronic criteria. U.S. EPA recommends conversion factors to translate dissolved concentrations to total concentrations. Default U.S. EPA translators were used for the receiving water and effluent. As discussed in section IV.C.2.e of this Fact Sheet, the applicable acute and chronic criteria for zinc are both 47 µg/L. Order R5-2010-0005 included effluent limitations for zinc based on the CTR criteria.

(b) **RPA Results.** MEC was 54 µg/L based on 81 samples collected since the water supply change. The mean value was 16 µg/L and the standard deviation was 8 µg/L between January 2013 and August 2014. The maximum observed upstream receiving water concentration for zinc was 5 µg/L based on four samples collected between January 2012 and October 2012. The remaining results for zinc in the effluent ranged between 3.7 µg/L and 54 µg/L, as shown in the figure below. The MEC value of 54 µg/L was determined to be an outlier based on both Rosner's outlier test and Grubbs outlier test. Rosner's outlier test is the recommended test by the U.S. EPA and the Grubbs outlier test is the recommended test when testing for a single outlier by the State Water Board, Division of Water Quality.

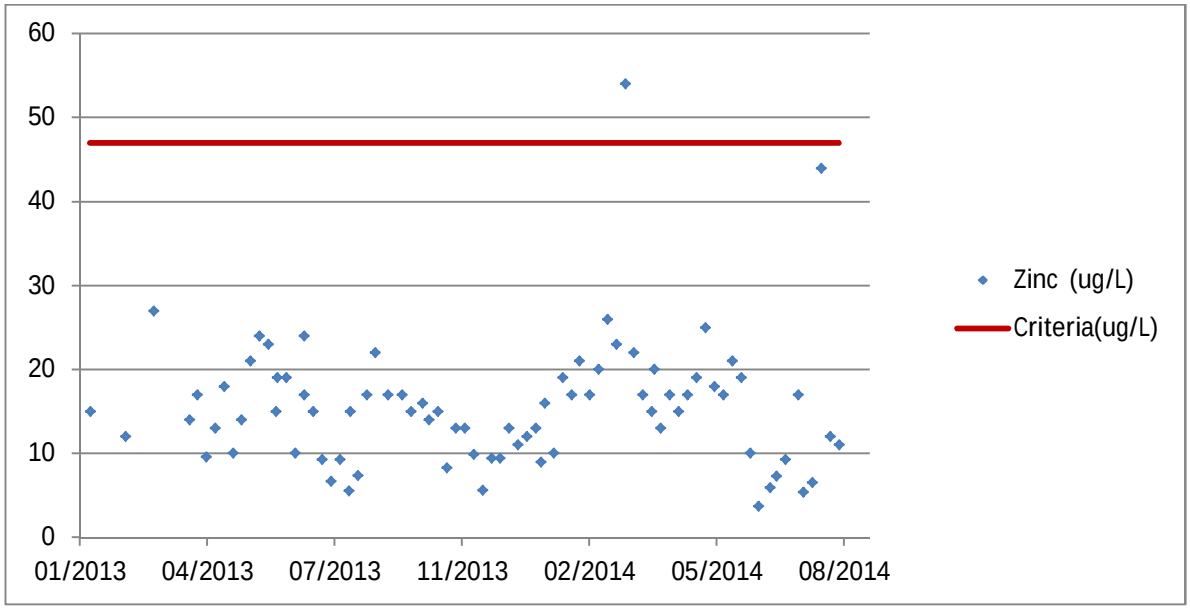

SIP section 1.2 requires that the Regional Board use all available, valid, relevant, representative data and information, as determined by the Regional Board, to implement the SIP. SIP section 1.2 further states, "The RWQCB shall have discretion to consider if any data are inappropriate or insufficient for use in implementing this Policy. Instances where such consideration is warranted include, but are not limited to, the following: evidence that a sample has been erroneously reported or is not representative of effluent or ambient receiving water quality; questionable quality control/quality assurance practices; and varying seasonal conditions." Therefore, in accordance with section 1.2 of the SIP, the Central Valley Water Board has determined that the effluent result of 54 µg/L collected on 10 March 2014 is not representative of the discharge from the Facility. Excluding the 10 March 2014 result, the MEC for zinc was 44 µg/L. Furthermore, as discussed in section IV.C.2.b of the Fact Sheet, the average hardness for the source water for the site and Facility is very low at 9.4 mg/L and is also moderately to highly aggressive, with an average Langelier Saturation Index (LSI) of -1.53 causing the water distribution system to corrode. To address this issue the Discharger began blending higher hardness water from an on-site well in January 2013 to increase the potable water hardness and reduce water distribution system corrosion. Data submitted by the Discharger on 1 April 2015 shows that the average zinc concentration in the discharge was reduced by 45% after the Discharger started blending the supply water. Therefore, zinc in the discharge does not demonstrate reasonable potential to cause or contribute to an in-stream excursion above the CTR criteria, and the WQBEL's for zinc have not been retained in this Order. Removal of these effluent limitations is in accordance with federal anti-backsliding regulations (see section IV.D.3 of the Fact Sheet).

b. **Constituents with Reasonable Potential.** The Central Valley Water Board finds that the discharge has a reasonable potential to cause or contribute to an in-stream excursion above a water quality standard for ammonia, BOD_5, mercury, nitrate plus nitrite, pathogens, pH, and TSS. WQBEL's for these constituents are included in this Order. A summary of the RPA is provided in Attachment G, and a detailed discussion of the RPA for each constituent is provided below.

i. **Ammonia**

(a) **WQO.** The 1999 USEPA National Ambient Water Quality Criteria (NAWQC) for the protection of freshwater aquatic life for total ammonia (the "1999 Criteria"), recommends acute (1-hour average; criteria maximum concentration or CMC) standards based on pH and chronic (30-day average; criteria continuous concentration or CCC) standards based on pH and temperature. USEPA also recommends that no 4-day average concentration should exceed 2.5 times the 30-day CCC. USEPA found that as pH increased, both the acute and chronic toxicity of ammonia increased. Salmonids were more sensitive to acute toxicity effects than other species. However, while the acute toxicity of ammonia was not influenced by temperature, it was found that invertebrates and young fish experienced increasing chronic toxicity effects with increasing temperature.

The USEPA recently published national recommended water quality criteria for the protection of aquatic life from the toxic effects of ammonia in freshwater (the "2013 Criteria") [1]. The 2013 Criteria is an update to USEPA's 1999 Criteria, and varies based on pH and temperature. Although the 2013 Criteria reflects the latest scientific knowledge on the toxicity of ammonia to certain freshwater aquatic life, including new toxicity data on sensitive freshwater mussels in the Family Unionidae, the species tested for development of the 2013 Criteria may not be present in some Central Valley waterways. The 2013 Criteria document therefore states that, "unionid mussel species are not prevalent in some waters, such as the arid west …" and provides that, "In the case of ammonia, where a state demonstrates that mussels are not present on a site-specific basis, the recalculation procedure may be used to remove the mussel species from the national criteria dataset to better represent the species present at the site."

The Central Valley Water Board issued a 3 April 2014 *California Water Code Section 13267 Order for Information: 2013 Final Ammonia Criteria for Protection of Freshwater Aquatic Life* (13267 Order) requiring the Discharger to either participate in an individual or group study to determine the presence of mussels or submit a method of compliance for complying with effluent limitations calculated assuming mussels present using the 2013 Criteria. The Discharger submitted a letter to the Central Valley Water Board indicating their participation in the Central Valley Clean Water Association Freshwater Collaborative Mussel Study. Studies are currently underway to determine how the latest scientific knowledge on the toxicity of ammonia reflected in the 2013 Criteria can be implemented in the Central Valley Region as part of a Basin Planning effort to adopt

[1] *Aquatic Life Ambient Water Quality Criteria for Ammonia – Freshwater*, published August 2013 [EPA 822-R-13-001]

nutrient and ammonia objectives. Until the Basin Planning process is completed, the Central Valley Water Board will continue to implement the 1999 Criteria to interpret the Basin Plan's narrative toxicity objective.

The maximum permitted effluent pH is 8.5, as the Basin Plan objective for pH in the receiving stream is the range of 6.5 to 8.5. In order to protect against the worst-case short-term exposure of an organism, a pH value of 8.5 was used to derive the acute criterion. The applicable acute criterion for is 2.14 mg/L.

A chronic criterion was calculated using the rolling 30-day average pH and temperature of the downstream receiving water for each day when paired temperature data and pH were measured. The minimum observed 30-day average criteria was established as the applicable 30-day average chronic criterion, or 30-day CCC. The applicable 30-day CCC is 1.55. The 4-day average concentration is derived in accordance with the U.S. EPA criterion as 2.5 times the 30-day CCC. Based on the 30-day CCC of 1.55 mg/L, the 4-day average concentration that should not be exceeded is 3.87 mg/L.

(b) **RPA Results.** The Facility is a POTW that treats domestic wastewater. Untreated domestic wastewater contains ammonia in concentrations that, without treatment, would be harmful to fish and would violate the Basin Plan narrative toxicity objective if discharged to the receiving water. Reasonable potential therefore exists and effluent limitations are required.

Federal regulations at 40 C.F.R. section 122.44(d)(1)(i) requires that, "*Limitations must control all pollutants or pollutant parameters (either conventional, nonconventional, or toxic pollutants) which the Director determines are or may be discharged at a level which will cause, have the reasonable potential to cause, or contribute to an excursion above any State water quality standard, including State narrative criteria for water quality*." For priority pollutants, the SIP dictates the procedures for conducting the RPA. Ammonia is not a priority pollutant. Therefore, the Central Valley Water Board is not restricted to one particular RPA method. Due to the site-specific conditions of the discharge, the Central Valley Water Board has used professional judgment in determining the appropriate method for conducting the RPA for this non-priority pollutant constituent.

U.S. EPA's September 2010 NPDES Permit Writer's Manual, page 6-30, states, "*State implementation procedures might allow, or even require, a permit writer to determine reasonable potential through a qualitative assessment process without using available facility-specific effluent monitoring data or when such data are not available…A permitting authority might also determine that WQBEL's are required for specific pollutants for all facilities that exhibit certain operational or discharge characteristics (e.g., WQBEL's for pathogens in all permits for POTW's discharging to contact recreational waters).*" U.S. EPA's TSD also recommends that factors other than effluent data should be considered in the RPA, "*When determining whether or not a discharge causes, has the reasonable potential to cause, or contributes to an excursion of a numeric or narrative water quality criterion for individual toxicants or for toxicity, the regulatory authority can use a variety of factors and information where*

facility-specific effluent monitoring data are unavailable. These factors also should be considered with available effluent monitoring data." With regard to POTW's, U.S. EPA recommends that, "*POTW's should also be characterized for the possibility of chlorine and ammonia problems*." (TSD, p. 50).

Nitrification is a biological process that converts ammonia to nitrite and nitrite to nitrate. Denitrification is a process that converts nitrate to nitrite or nitric oxide and then to nitrous oxide or nitrogen gas, which is then released to the atmosphere. The Discharger currently uses nitrification to remove ammonia from the waste stream. Inadequate or incomplete nitrification may result in the discharge of ammonia to the receiving stream. Ammonia is known to cause toxicity to aquatic organisms in surface waters. Discharges of ammonia in concentrations that produce detrimental physiological responses to human, plant, animal, or aquatic life would violate the Basin Plan narrative toxicity objective. Although the Discharger nitrifies the discharge, inadequate or incomplete nitrification creates the potential for ammonia to be discharged and provides the basis for the discharge to have a reasonable potential to cause or contribute to an in-stream excursion above the NAWQC. Therefore, the Central Valley Water Board finds the discharge has reasonable potential for ammonia and WQBEL's are required.

(c) **WQBEL's.** The Central Valley Water Board calculates WQBEL's in accordance with SIP procedures for non-CTR constituents, and ammonia is a non-CTR constituent. The SIP procedure assumes a 4-day averaging period for calculating the long-term average discharge condition (LTA). However, U.S. EPA recommends modifying the procedure for calculating permit limits for ammonia using a 30-day averaging period for the calculation of the LTA corresponding to the 30-day CCC. Therefore, while the LTA's corresponding to the acute and 4-day chronic criteria were calculated according to SIP procedures, the LTA corresponding to the 30-day CCC was calculated assuming a 30-day averaging period. The lowest LTA representing the acute, 4-day CCC, and 30-day CCC is then selected for deriving the average monthly effluent limitation (AMEL) and the average weekly effluent limitation (AWEL). The remainder of the WQBEL calculation for ammonia was performed according to the SIP procedures. This Order contains a final AMEL and AWEL for ammonia (as N) of 1.1 mg/L and 1.8 mg/L, respectively.

(d) **Plant Performance and Attainability.** Ammonia was not detected in the effluent, based on 607 samples collected between January 2013 and August 2014. The Central Valley Water Board concludes, therefore, that immediate compliance with these effluent limitations is feasible.

ii. **Mercury**

(a) **WQO.** The current NAWQC for protection of freshwater aquatic life, continuous concentration, for mercury is 0.77 µg/L (30-day average, chronic criteria). The CTR contains a human health criterion (based on a threshold dose level causing neurological effects in infants) of 0.050 µg/L for waters from which both water and aquatic organisms are consumed. Both values are controversial and subject to change. In 40 C.F.R. part 131, U.S. EPA acknowledges that the human health criteria may not be protective of some aquatic or endangered species and that "…*more stringent mercury limits may be determined and implemented through use of the State's narrative criterion.*" In the CTR, U.S. EPA reserved the mercury criteria for freshwater and aquatic life and may adopt new criteria at a later date.

(b) **RPA Results.** The MEC for mercury was 0.00151 µg/L based on 20 samples collected between January 2013 and August 2014. The maximum observed upstream receiving water concentration for mercury was 0.00382 µg/L based on four samples collected between January 2012 and August 2014. Therefore, the effluent does not have reasonable potential to cause or contribute to an exceedance of the CTR criteria for mercury. However, mercury bioaccumulates in fish tissue and, therefore, the discharge of mercury to the receiving water may contribute to exceedances of the narrative toxicity objective and impact beneficial uses. The discharge of mercury to surface waters in the Central Valley draining to the Sacramento – San Joaquin Delta are being limited in order to protect the beneficial uses of the Delta.

(c) **WQBEL's.** Order R5-2010-0005 contained a monthly mercury mass-based effluent limitation of 0.00020 lbs/month (0.09 grams/year). For this Order, the averaging period for the mass-based effluent limitation has been revised to be consistent with performance-based mass limitations assigned in other recently adopted permits in the region. Therefore, this Order contains a performance-based mass effluent limitation of 1.1 grams/year, for mercury, based on the previous monthly mass limitation. This limitation ensures the mercury loading is continued to be maintained at the current level until a TMDL can be established and U.S. EPA develops mercury standards that are protective of human health and is not less stringent than the previous limit. If U.S. EPA develops new water quality standards for mercury, this permit may be reopened and the effluent limitations adjusted.

(d) **Plant Performance and Attainability.** The maximum annual mercury mass loading was 0.13 grams/year. The Central Valley Water Board concludes, therefore, that immediate compliance with these effluent limitations is feasible.

iii. **Nitrate and Nitrite**

(a) **WQO.** DDW has adopted Primary MCL's for the protection of human health for nitrite and nitrate that are equal to 1 mg/L and 10 mg/L (measured as nitrogen), respectively. DDW has also adopted a Primary MCL of 10 mg/L for the sum of nitrate and nitrite, measured as nitrogen.

U.S. EPA has developed a Primary MCL and an MCL goal of 1 mg/L for nitrite (as nitrogen). For nitrate, U.S. EPA has developed Drinking Water Standards (10 mg/L as Primary MCL) and NAWQC for protection of human health (10 mg/L for non-cancer health effects).

(b) **RPA Results.** The Facility is a POTW that treats domestic wastewater. Untreated domestic wastewater contains ammonia in concentrations that, if untreated, will be harmful to fish and will violate the Basin Plan's narrative toxicity objective. This Order, therefore, requires removal of ammonia (i.e., nitrification). Nitrification is a biological process that converts ammonia to nitrate and nitrite, and will result in effluent nitrate concentrations above the Primary MCL for nitrate plus nitrite. Nitrate concentrations in a drinking water supply above the Primary MCL threaten the health of human fetuses and newborn babies by reducing the oxygen-carrying capacity of the blood (methemoglobinemia). Reasonable potential for nitrate and nitrite therefore exists and WQBEL's are required.

Federal regulations at 40 C.F.R. section 122.44(d)(1)(i) requires that, "*Limitations must control all pollutants or pollutant parameters (either conventional, nonconventional, or toxic pollutants) which the Director determines are or may be discharged at a level which will cause, have the reasonable potential to cause, or contribute to an excursion above any State water quality standard, including State narrative criteria for water quality.*" For priority pollutants, the SIP dictates the procedures for conducting the RPA. Nitrate and nitrite are not priority pollutants. Therefore, the Central Valley Water Board is not restricted to one particular RPA method. Due to the site-specific conditions of the discharge, the Central Valley Water Board has used professional judgment in determining the appropriate method for conducting the RPA for this non-priority pollutant constituent.

U.S. EPA's September 2010 NPDES Permit Writer's Manual, page 6-30, states, "*State implementation procedures might allow, or even require, a permit writer to determine reasonable potential through a qualitative assessment process without using available facility-specific effluent monitoring data or when such data are not available…A permitting authority might also determine that WQBEL's are required for specific pollutants for all facilities that exhibit certain operational or discharge characteristics (e.g., WQBEL's for pathogens in all permits for POTW's discharging to contact recreational waters).*" U.S. EPA's TSD also recommends that factors other than effluent data should be considered in the RPA, "*When determining whether or not a discharge causes, has the reasonable potential to cause, or contributes to an excursion of a numeric or narrative water quality criterion for individual toxicants or for toxicity, the regulatory authority can use a variety of factors and information where facility-specific effluent monitoring data are unavailable. These factors also should be considered with available effluent monitoring data*." With regard

to POTW'S, U.S. EPA recommends that, "*POTW's should also be characterized for the possibility of chlorine and ammonia problems*." (TSD, p. 50).

The concentration of nitrogen in raw domestic wastewater is sufficiently high that the resultant treated wastewater has a reasonable potential to exceed or threaten to exceed the Primary MCL for nitrate plus nitrite unless the wastewater is treated for nitrogen removal, and therefore an effluent limit for nitrate plus nitrite is required. Denitrification is a process that converts nitrate to nitrite or nitric oxide and then to nitrous oxide or nitrogen gas, which is then released to the atmosphere. The Discharger currently uses nitrification/denitrification to remove ammonia, nitrite, and nitrate from the waste stream. Inadequate or incomplete denitrification may result in the discharge of nitrate and/or nitrite to the receiving stream. Discharges of nitrate plus nitrite in concentrations that exceed the Primary MCL would violate the Basin Plan narrative chemical constituents objective. Although the Discharger denitrifies the discharge, inadequate or incomplete denitrification creates the potential for nitrate and nitrite to be discharged and provides the basis for the discharge to have a reasonable potential to cause or contribute to an in-stream excursion above the Primary MCL. Therefore, the Central Valley Water Board finds the discharge has reasonable potential for nitrate plus nitrite and WQBEL's are required.

(c) **WQBEL's.** This Order contains a final AMEL for nitrate plus nitrite of 10 mg/L (total as N) and an AWEL of 20 mg/L based on the Primary MCL. This effluent limitation is included in this Order to assure the treatment process adequately nitrifies and denitrifies the waste stream to protect the beneficial use of municipal and domestic supply.

(d) **Plant Performance and Attainability.** The maximum effluent nitrate and nitrite concentrations were 3.5 mg/L and 0.23 mg/L, respectively. The Central Valley Water Board concludes, therefore, that immediate compliance with these effluent limitations is feasible.

iv. **Pathogens**

(a) **WQO.** DDW has developed reclamation criteria, CCR, Division 4, Chapter 3 (Title 22), for the reuse of wastewater. Title 22 requires that for spray irrigation of food crops, parks, playgrounds, schoolyards, and other areas of similar public access, wastewater be adequately disinfected, oxidized, coagulated, clarified, and filtered, and that the effluent total coliform levels not exceed 2.2 MPN/100 mL as a 7-day median; 23 MPN/100 mL, not to be exceeded more than once in a 30-day period; and 240 MPN/100 mL, at any time.

Title 22 also requires that recycled water used as a source of water supply for non-restricted recreational impoundments be disinfected tertiary recycled water that has been subjected to conventional treatment. A non-restricted recreational impoundment is defined as *"…an impoundment of recycled water, in which no limitations are imposed on body-contact water recreational activities.*" Title 22 is not directly applicable to surface waters; however, the Central Valley Water Board finds that it is appropriate to apply an equivalent level of treatment to that required by the DDW's reclamation criteria because the receiving water is used for irrigation of

agricultural land and for contact recreation purposes. The stringent disinfection criteria of Title 22 are appropriate since the undiluted effluent may be used for the irrigation of food crops and/or for body-contact water recreation. Coliform organisms are intended as an indicator of the effectiveness of the entire treatment train and the effectiveness of removing other pathogens.

(b) **RPA Results.** Raw domestic wastewater inherently contains human pathogens that threaten human health and life, and constitute a threatened pollution and nuisance under CWC Section 13050 if discharged untreated to the receiving water. Reasonable potential for pathogens therefore exists and WQBEL's are required.

Federal regulations at 40 C.F.R. section 122.44(d)(1)(i) requires that, "*Limitations must control all pollutants or pollutant parameters (either conventional, nonconventional, or toxic pollutants) which the Director determines are or may be discharged at a level which will cause, have the reasonable potential to cause, or contribute to an excursion above any State water quality standard, including State narrative criteria for water quality.*" For priority pollutants, the SIP dictates the procedures for conducting the RPA. Pathogens are not priority pollutants. Therefore, the Central Valley Water Board is not restricted to one particular RPA method. Due to the site-specific conditions of the discharge, the Central Valley Water Board has used professional judgment in determining the appropriate method for conducting the RPA for this non-priority pollutant constituent.

U.S. EPA's September 2010 NPDES Permit Writer's Manual, page 6-30, states, "*State implementation procedures might allow, or even require, a permit writer to determine reasonable potential through a qualitative assessment process without using available facility-specific effluent monitoring data or when such data are not available…A permitting authority might also determine that WQBEL's are required for specific pollutants for all facilities that exhibit certain operational or discharge characteristics (e.g., WQBEL's for pathogens in all permits for POTW's discharging to contact recreational waters).*" U.S. EPA's TSD also recommends that factors other than effluent data should be considered in the RPA, "*When determining whether or not a discharge causes, has the reasonable potential to cause, or contributes to an excursion of a numeric or narrative water quality criterion for individual toxicants or for toxicity, the regulatory authority can use a variety of factors and information where facility-specific effluent monitoring data are unavailable. These factors also should be considered with available effluent monitoring data.*" (TSD, p. 50).

The beneficial uses of Orchard Creek include municipal and domestic supply, water contact recreation, and agricultural irrigation supply, and there is, at times, less than 20:1 dilution. To protect these beneficial uses, the Central Valley Water Board finds that the wastewater must be disinfected and adequately treated to prevent disease. Although the Discharger provides disinfection, inadequate or incomplete disinfection creates the potential for pathogens to be discharged. Therefore, the Central Valley Water Board finds the discharge has reasonable potential for pathogens and WQBEL's are required.

(c) **WQBEL's.** In accordance with the requirements of Title 22, this Order includes effluent limitations for total coliform organisms of 2.2 MPN/100 mL as a 7-day median; 23 MPN/100 mL, not to be exceeded more than once in a 30-day period; and 240 MPN/100 mL as an instantaneous maximum.

The tertiary treatment process, or equivalent, is capable of reliably treating wastewater to a turbidity level of 0.2 nephelometric turbidity units (NTU) as a daily average. Failure of the filtration system such that virus removal is impaired would normally result in increased particles in the effluent, which result in higher effluent turbidity. Turbidity has a major advantage for monitoring filter performance. Coliform testing, by comparison, is not conducted continuously and requires several hours, to days, to identify high coliform concentrations. Therefore, to ensure compliance with the DDW recommended Title 22 disinfection criteria, weekly average specifications are impracticable for turbidity. This Order includes operational specifications for turbidity of 0.2 NTU more than 5% of the time in a 24 hour period as an instantaneous maximum.

This Order contains effluent limitations for BOD_5, total coliform organisms, and TSS and requires a tertiary level of treatment, or equivalent, necessary to protect the beneficial uses of the receiving water. The Central Valley Water Board has previously considered the factors in Water Code section 13241 in establishing these requirements.

Final WQBEL's for BOD_5 and TSS are based on the technical capability of the tertiary process, which is necessary to protect the beneficial uses of the receiving water. BOD_5 is a measure of the amount of oxygen used in the biochemical oxidation of organic matter. The tertiary treatment standards for BOD_5 and TSS are indicators of the effectiveness of the tertiary treatment process. The principal design parameter for wastewater treatment plants is the daily BOD_5 and TSS loading rates and the corresponding removal rate of the system. The application of tertiary treatment processes results in the ability to achieve lower levels for BOD_5 and TSS than the secondary standards currently prescribed. Therefore, this Order requires AMEL's for BOD_5 and TSS of 10 mg/L, which is technically based on the capability of a tertiary system. In addition to the average weekly and average monthly effluent limitations, a daily maximum effluent limitation for BOD_5 and TSS is included in the Order to ensure that the treatment works are not organically overloaded and operate in accordance with design capabilities.

(d) **Plant Performance and Attainability.** The Facility provides tertiary treatment and utilizes a UV disinfection system which was designed to achieve Title 22 criteria. The Central Valley Water Board concludes, therefore, that immediate compliance with these effluent limitations is feasible.

v. **pH**

(a) **WQO.** The Basin Plan includes a water quality objective for surface waters (except for Goose Lake) that the *"…pH shall not be depressed below 6.5 nor raised above 8.5.*"

(b) **RPA Results.** Raw domestic wastewater inherently has variable pH. Additionally, some wastewater treatment processes can increase or decrease wastewater pH which if not properly controlled, would violate the Basin Plan's numeric objective for pH in the receiving water. Therefore, reasonable potential exists for pH and WQBEL's are required.

Federal regulations at 40 C.F.R. section 122.44(d)(1)(i) requires that, "*Limitations must control all pollutants or pollutant parameters (either conventional, nonconventional, or toxic pollutants) which the Director determines are or may be discharged at a level which will cause, have the reasonable potential to cause, or contribute to an excursion above any State water quality standard, including State narrative criteria for water quality.*" For priority pollutants, the SIP dictates the procedures for conducting the RPA. pH is not a priority pollutant. Therefore, the Central Valley Water Board is not restricted to one particular RPA method. Due to the site-specific conditions of the discharge, the Central Valley Water Board has used professional judgment in determining the appropriate method for conducting the RPA for this non-priority pollutant constituent.

U.S. EPA's September 2010 NPDES Permit Writer's Manual, page 6-30, states, "*State implementation procedures might allow, or even require, a permit writer to determine reasonable potential through a qualitative assessment process without using available facility-specific effluent monitoring data or when such data are not available…A permitting authority might also determine that WQBEL's are required for specific pollutants for all facilities that exhibit certain operational or discharge characteristics (e.g., WQBEL's for pathogens in all permits for POTW's discharging to contact recreational waters).*" U.S. EPA's TSD also recommends that factors other than effluent data should be considered in the RPA, "*When determining whether or not a discharge causes, has the reasonable potential to cause, or contributes to an excursion of a numeric or narrative water quality criterion for individual toxicants or for toxicity, the regulatory authority can use a variety of factors and information where facility-specific effluent monitoring data are unavailable. These factors also should be considered with available effluent monitoring data.*" (TSD, p. 50).

The Facility is a POTW that treats domestic wastewater. Based on 608 samples taken from January 2013 to August 2014, the maximum pH reported was 7.96 and the minimum was 6.65. Although the Discharger has proper pH controls in place, the pH for the Facility's influent varies due to the nature of municipal sewage, which provides the basis for the discharge to have a reasonable potential to cause or contribute to an in-stream excursion above the Basin Plan's numeric objective for pH in the receiving water. Therefore, WQBEL's for pH are required in this Order.

(c) **WQBEL's.** Effluent limitations for pH of 6.5 as an instantaneous minimum and 8.5 as an instantaneous maximum are included in this Order based on protection of the Basin Plan objectives for pH.

(d) **Plant Performance and Attainability.** Effluent pH ranged from 6.65 to 7.96. The Central Valley Water Board concludes, therefore, that immediate compliance with these effluent limitations is feasible.

4. WQBEL Calculations

a. This Order includes WQBEL's for ammonia, BOD_5, mercury, nitrate plus nitrite, pH, total coliform organisms, and TSS. The general methodology for calculating WQBEL's based on the different criteria/objectives is described in subsections IV.C.5.b through e, below. See Attachment H for the WQBEL calculations.

b. **Effluent Concentration Allowance.** For each water quality criterion/objective, the ECA is calculated using the following steady-state mass balance equation from Section 1.4 of the SIP:

ECA = C + D(C – B) *where C>B, and*
ECA = C *where C≤B*

where:

ECA = effluent concentration allowance
D = dilution credit
C = the priority pollutant criterion/objective
B = the ambient background concentration.

According to the SIP, the ambient background concentration (B) in the equation above shall be the observed maximum with the exception that an ECA calculated from a priority pollutant criterion/objective that is intended to protect human health from carcinogenic effects shall use the arithmetic mean concentration of the ambient background samples. For ECA's based on MCL's, which implement the Basin Plan's chemical constituents objective and are applied as annual averages, an arithmetic mean is also used for B due to the long-term basis of the criteria.

c. **Basin Plan Objectives and MCL's.** For WQBEL's based on site-specific numeric Basin Plan objectives or MCL's, the effluent limitations are applied directly as the ECA as either an MDEL, AWEL, AMEL, or average annual effluent limitations, depending on the averaging period of the objective.

d. **Aquatic Toxicity Criteria.** WQBEL's based on acute and chronic aquatic toxicity criteria are calculated in accordance with Section 1.4 of the SIP. The ECA's are converted to equivalent long-term averages (i.e., LTA_{acute} and $LTA_{chronic}$) using statistical multipliers and the lowest LTA is used to calculate the AMEL and MDEL using additional statistical multipliers.

e. **Human Health Criteria.** WQBEL's based on human health criteria, are also calculated in accordance with Section 1.4 of the SIP. The AMEL is set equal to ECA and a statistical multiplier was used to calculate the MDEL.

$$AMEL = mult_{AMEL}\left[\min\left(\overbrace{M_A ECA_{acute}}^{LTA_{acute}}, M_C ECA_{chronic}\right)\right]$$

$$MDEL = mult_{MDEL}\left[\min\left(M_A ECA_{acute}, \underbrace{M_C ECA_{chronic}}_{LTA_{chronic}}\right)\right]$$

$$MDEL_{HH} = \left(\frac{mult_{MDEL}}{mult_{AMEL}}\right) AMEL_{HH}$$

where:

$mult_{AMEL}$ = statistical multiplier converting minimum LTA to AMEL
$mult_{MDEL}$ = statistical multiplier converting minimum LTA to MDEL
M_A = statistical multiplier converting acute ECA to LTA_{acute}
M_C = statistical multiplier converting chronic ECA to $LTA_{chronic}$

Summary of Water Quality-Based Effluent Limitations
Discharge Point 001

Table F-16. Summary of Water Quality-Based Effluent Limitations

Parameter	Units	Effluent Limitations				
		Average Monthly	Average Weekly	Maximum Daily	Instantaneous Minimum	Instantaneous Maximum
Conventional Pollutants						
Biochemical Oxygen Demand (5-day @ 20°C)	mg/L	10	15	20	--	--
	lbs/day[1]	58	88	117	--	--
	lbs/day[2]	73	109	146	--	--
pH	standard units	--	--	--	6.5	8.5
Total Suspended Solids	mg/L	10	15	20	--	--
	lbs/day[1]	58	88	117	--	--
	lbs/day[2]	73	109	146	--	--
Priority Pollutants						
Mercury, Total Recoverable	grams/year	1.1[3]	--	--	--	--
Non-Conventional Pollutants						
Ammonia Nitrogen, Total (as N)	mg/L	1.1	1.8	--	--	--
	lbs/day[1]	6.4	11	--	--	--
	lbs/day[2]	8.0	13	--	--	--
Nitrate Plus Nitrite (as N)	mg/L	10	20	--	--	--
Total Coliform Organisms	MPN/100 mL	--	2.2[4]	23[5]	--	240

1 Based on a peak design flow of 0.70 MGD, effective immediately and until Executive Officer's written approval of flow increase (Special Provision VI.C.6.b).
2 Based on a peak design flow of 0.875 MGD, effective upon Executive Officer's written approval of flow increase (Special Provision VI.C.6.b).
3 For a calendar year, the total annual mass discharge of total mercury shall not exceed 1.1 grams/year.
4 Applied as a 7-day median effluent limitation.
5 Not to be exceeded more than once in any 30-day period.

5. Whole Effluent Toxicity (WET)

For compliance with the Basin Plan's narrative toxicity objective, this Order requires the Discharger to conduct whole effluent toxicity testing for acute and chronic toxicity, as specified in the Monitoring and Reporting Program (Attachment E section V.). This Order also contains effluent limitations for acute toxicity and requires the Discharger to implement best management practices to investigate the causes of, and identify corrective actions to reduce or eliminate effluent toxicity.

a. **Acute Aquatic Toxicity.** The Basin Plan contains a narrative toxicity objective that states, "*All waters shall be maintained free of toxic substances in concentrations that produce detrimental physiological responses in human, plant, animal, or aquatic life.*" (Basin Plan at page III-8.00). The Basin Plan also states that, *"…effluent limits based upon acute biotoxicity tests of effluents will be prescribed where appropriate…*"

For priority pollutants, the SIP dictates the procedures for conducting the RPA. Acute toxicity is not a priority pollutant. Therefore, the Central Valley Water Board is not restricted to one particular RPA method. Therefore, due to the site-specific conditions of the discharge, the Central Valley Water Board has used professional judgment in determining the appropriate method for conducting the RPA. U.S. EPA's September 2010 NPDES Permit Writer's Manual, page 6-30, states, "*State implementation procedures might allow, or even require, a permit writer to determine reasonable potential through a qualitative assessment process without using available facility-specific effluent monitoring data or when such data are not available…A permitting authority might also determine that WQBEL's are required for specific pollutants for all facilities that exhibit certain operational or discharge characteristics (e.g., WQBEL's for pathogens in all permits for POTW's discharging to contact recreational waters).*" Although the discharge has been consistently in compliance with the acute effluent limitations, the Facility is a POTW that treats domestic wastewater containing ammonia and other acutely toxic pollutants. Acute toxicity effluent limits are required to ensure compliance with the Basin Plan's narrative toxicity objective.

U.S. EPA Region 9 provided guidance for the development of acute toxicity effluent limitations in the absence of numeric water quality objectives for toxicity in its document titled "Guidance for NPDES Permit Issuance", dated February 1994. In section B.2. "Toxicity Requirements" (pgs. 14-15) it states that, "*In the absence of specific numeric water quality objectives for acute and chronic toxicity, the narrative criterion 'no toxics in toxic amounts' applies. Achievement of the narrative criterion, as applied herein, means that ambient waters shall not demonstrate for acute toxicity: 1) less than 90% survival, 50% of the time, based on the monthly median, or 2) less than 70% survival, 10% of the time, based on any monthly median. For chronic toxicity, ambient waters shall not demonstrate a test result of greater than 1 TUc.*" Consistent with Order R5-2010-0005, effluent limitations for acute toxicity have been included in this Order as follows:

Acute Toxicity. Survival of aquatic organisms in 96-hour bioassays of undiluted waste shall be no less than:

Minimum for any one bioassay---------- 70%
Median for any three consecutive bioassays---------- 90%

b. **Chronic Aquatic Toxicity.** The Basin Plan contains a narrative toxicity objective that states, "*All waters shall be maintained free of toxic substances in*

concentrations that produce detrimental physiological responses in human, plant, animal, or aquatic life." (Basin Plan at page III-8.00). As shown in the table below, based on chronic WET testing performed by the Discharger from 9 January 2013 through August 2014, the discharge has reasonable potential to cause or contribute to an in-stream excursion above the Basin Plan's narrative toxicity objective.

Table F-17. Whole Effluent Chronic Toxicity Testing Results

Date	Fathead Minnow *Pimephales promelas*		Water Flea *Ceriodaphnia dubia*		Green Algae *Selenastrum capricornutum*
	Survival (TUc)	Growth (TUc)	Survival (TUc)	Reproduction (TUc)	Growth (TUc)
9 January 2013	--	--	1	2[1]	--
22 January 2013	1	1	1	1	1
4 February 2013	--	--	1	1.3[1]	--
18 February 2013	--	--	1	1.3[1]	--
4 March 2013	--	--	1	1.3[1]	--
1 April 2013	--	--	1	1	--
15 April 2013	--	--	1	1[2]	--
29 April 2013	--	--	1	1.3[3]	--
27 May 2013	--	--	1	1	--
10 June 2013	--	--	1	1[2]	--
8 July 2013	--	--	1	1.3[3]	--
22 July 2013	--	--	1	2[3]	--
5 August 2013	--	--	1	1	--
19 August 2013	--	--	1	1	--
2 September 2013	--	--	1	1[2]	--
16 September 2013	--	--	1[3]	8[3]	--
30 September 2013	--	--	1	4[3]	--
14 October 2013	--	--	1	1	--
28 October 2013	--	--	1	1	--
11 November 2013	--	--	1	2[3]	--
2 December 2013	--	--	1	1.3[3]	--
9 December 2013	--	--	1	1.3[3]	--
16 December 2013	--	--	1	1.3[3]	--
6 January 2014	--	--	1	1[2]	--
20 January 2014	1	1	1	2[3]	1
3 February 2014	--	--	1	1.3[3]	--
19 February 2014	--	--	1	1	--
3 March 2014	--	--	1	4[3]	--
17 March 2014	--	--	1	1[2]	--
14 April 2014	--	--	1	1[2]	--
28 April 2014	--	--	1	1	--
12 May 2014	--	--	1	1	--

[1] The EFF-001 sample diluted in RSW-001 caused a significant decrease when compared to RSW-001. The EFF-001 sample diluted in lab water did not cause significant toxicity.

[2] The EFF-001 sample diluted in RSW-001 did not cause significant toxicity when compared to the RSW-001 control. However, the EFF-001 sample caused a significant decrease when compared to the laboratory control.

[3] The EFF-001 sample diluted in RSW-001 caused significant toxicity when compared to both the RSW-001 and laboratory controls.

Since January 2012 effluent from the Facility has produced intermittent, low-level chronic toxicity to *Ceriodaphnia dubia* with respect to reproduction. The Discharger prepared a TRE Action Plan, developed and implemented in accordance with the U.S. EPA *Toxicity Reduction Evaluation Guidance for Municipal Wastewater Treatment Plants* (EPA 833B-99-002) to determine the source of toxicity. The Discharger investigated sources of wastewater to the Facility, evaluated Facility operations and performance, and conducted TIE testing including the following: evaluating the potable water system, evaluating wastewater sources for potential toxicity, reviewing Facility operations and maintenance procedures, a literature review to identify possible *C. dubia* toxicity causes, targeted final effluent water quality sampling, TIE testing, and evaluating the TIE test results and performed additional chronic toxicity testing as needed. The TRE determined that low effluent hardness impairs *C. dubia* and may be the cause of chronic toxicity to *C. dubia* reproduction. Other TIE testing did not indicate other causes of toxicity to *C. dubia*.

The Discharger requested two variances to the chronic toxicity testing requirements in May 2014, which were approved by the Central Valley Water Board in a June 2014 letter. The Discharger requested the following:

i. The Discharger requested that laboratory control water and plant effluent be adjusted to match receiving water hardness conditions. The Central Valley Water Board requested that the monitoring reports discuss the adjustment and report the associated hardness of the water.

ii. The Discharger requested that the laboratory only use organisms from mature broods that are acclimated in softer water. The Central Valley Water Board requested that the Discharger conduct a minimum of three side-by-side chronic toxicity tests using both acclimated and regular *C. dubia* stock. If the tests indicate that there is no toxicity when using the acclimated stock, the Central Valley Water Board will allow continued testing with acclimated stock for compliance purposes. The Central Valley Water Board requested that the Discharger report the hardness with which the organisms are acclimated.

The Discharger submitted a July 2014 workplan conducting side-by-side toxicity testing using stock acclimated to soft water and regular stock to determine if stock acclimated in water that more accurately reflected the conditions in the receiving water would cause toxicity. Three side-by-side tests were conducted and the results demonstrated that there was no toxicity when acclimated stock was used. The Central Valley Water Board therefore will allow the Discharger to use acclimated stock for toxicity testing to more accurately gauge toxicity in these similar conditions.

No dilution has been granted for the chronic condition. Therefore, chronic toxicity testing results exceeding **1** chronic toxicity unit (TUc) demonstrates the discharge has a reasonable potential to cause or contribute to an exceedance of the Basin Plan's narrative toxicity objective.

The Monitoring and Reporting Program of this Order requires quarterly chronic WET monitoring for demonstration of compliance with the narrative toxicity objective. In addition to WET monitoring, the Special Provision in section VI.C.2.a of the Order includes a numeric toxicity monitoring trigger, requirements for accelerated monitoring, and requirements for TRE initiation if toxicity is demonstrated.

Numeric chronic WET effluent limitations have not been included in this Order. The SIP contains implementation gaps regarding the appropriate form and implementation of chronic toxicity limits. This has resulted in the petitioning of a

NPDES permit in the Los Angeles Region[1] that contained numeric chronic toxicity effluent limitations. To address the petition, the State Water Board adopted WQO 2003-012 directing its staff to revise the toxicity control provisions in the SIP. The State Water Board states the following in WQO 2003-012, "*In reviewing this petition and receiving comments from numerous interested persons on the propriety of including numeric effluent limitations for chronic toxicity in NPDES permits for publicly-owned treatment works that discharge to inland waters, we have determined that this issue should be considered in a regulatory setting, in order to allow for full public discussion and deliberation. We intend to modify the SIP to specifically address the issue. We anticipate that review will occur within the next year. We therefore decline to make a determination here regarding the propriety of the final numeric effluent limitations for chronic toxicity contained in these permits.*" The process to revise the SIP is currently underway. Proposed changes include clarifying the appropriate form of effluent toxicity limits in NPDES permits and general expansion and standardization of toxicity control implementation related to the NPDES permitting process. Since the toxicity control provisions in the SIP are under revision it is infeasible to develop numeric effluent limitations for chronic toxicity. Therefore, this Order requires that the Discharger meet best management practices for compliance with the Basin Plan's narrative toxicity objective, as allowed under 40 C.F.R. section 122.44(k).

To ensure compliance with the Basin Plan's narrative toxicity objective, the Discharger is required to conduct chronic WET testing, as specified in the Monitoring and Reporting Program (Attachment E section V.). Furthermore, the Special Provision contained at VI.C.2.a. of this Order requires the Discharger to investigate the causes of, and identify and implement corrective actions to reduce or eliminate effluent toxicity. If the discharge demonstrates toxicity exceeding the numeric toxicity monitoring trigger, the Discharger is required to initiate a Toxicity Reduction Evaluation (TRE) in accordance with an approved TRE workplan, or conduct a toxicity evaluation study approved by the Executive Officer. The numeric toxicity monitoring trigger is not an effluent limitation; it is the toxicity threshold at which the Discharger is required to perform accelerated chronic toxicity monitoring, as well as, the threshold to initiate a TRE if effluent toxicity has been demonstrated.

D. Final Effluent Limitation Considerations

1. Mass-based Effluent Limitations

40 C.F.R section 122.45(f)(1) requires effluent limitations be expressed in terms of mass, with some exceptions, and 40 C.F.R. section 122.45(f)(2) allows pollutants that are limited in terms of mass to additionally be limited in terms of other units of measurement. This Order includes effluent limitations expressed in terms of mass and concentration. In addition, pursuant to the exceptions to mass limitations provided in 40 CF.R. section 122.45(f)(1), some effluent limitations are not expressed in terms of mass, such as pH and temperature, and when the applicable standards are expressed in terms of concentration (e.g., CTR criteria and MCL's) and mass limitations are not necessary to protect the beneficial uses of the receiving water.

[1] In the Matter of the Review of Own Motion of Waste Discharge Requirements Order Nos. R4-2002-0121 [NPDES No. CA0054011] and R4-2002-0123 [NPDES NO. CA0055119] and Time Schedule Order Nos. R4-2002-0122 and R4-2002-0124 for Los Coyotes and Long Beach Wastewater Reclamation Plants Issued by the California Regional Water Quality Control Board, Los Angeles Region SWRCB/OCC FILES A-1496 AND 1496(a).

Mass-based effluent limitations have been established in this Order for ammonia, BOD_5, and TSS because they are oxygen demanding substances. Except for the pollutants listed above, mass-based effluent limitations are not included in this Order for pollutant parameters for which effluent limitations are based on water quality objectives and criteria that are concentration-based.

Mass-based effluent limitations were calculated based upon the design flow (Peak Daily Flow) permitted in section IV.A.1.f of this Order.

2. Averaging Periods for Effluent Limitations

40 C.F.R. section 122.45 (d) requires AWEL's and AMEL's for POTW's unless impracticable. For BOD_5, pH, and TSS, AWEL's have been replaced or supplemented with effluent limitations utilizing shorter averaging periods. The rationale for using shorter averaging periods for these constituents is discussed in section IV.C.3 of this Fact Sheet.

3. Satisfaction of Anti-Backsliding Requirements

The CWA specifies that a revised permit may not include effluent limitations that are less stringent than the previous permit unless a less stringent limitation is justified based on exceptions to the anti-backsliding provisions contained in CWA sections 402(o) or 303(d)(4), or, where applicable, 40 C.F.R. section 122.44(l).

The effluent limitations in this Order are at least as stringent as the effluent limitations in the previous Order, with the exception of effluent limitations for aluminum, cadmium, chlorine residual, delta-BHC, electrical conductivity, endrin aldehyde, iron, lead, manganese, and zinc. The effluent limitations for these pollutants are less stringent than those in Order R5-2010-0005. This relaxation of effluent limitations is consistent with the anti-backsliding requirements of the CWA and federal regulations.

a. **CWA section 402(o)(1) and 303(d)(4).** CWA section 402(o)(1) prohibits the establishment of less stringent water quality-based effluent limits "*except in compliance with Section 303(d)(4).*" CWA section 303(d)(4) has two parts: paragraph (A) which applies to nonattainment waters and paragraph (B) which applies to attainment waters.

   i. For waters where standards are not attained, CWA section 303(d)(4)(A) specifies that any effluent limit based on a TMDL or other WLA may be revised only if the cumulative effect of all such revised effluent limits based on such TMDL's or WLAs will assure the attainment of such water quality standards.

   ii. For attainment waters, CWA section 303(d)(4)(B) specifies that a limitation based on a water quality standard may be relaxed where the action is consistent with the antidegradation policy.

   Orchard Creek is considered an attainment water for aluminum, cadmium, chlorine residual, delta-BHC, electrical conductivity, endrin aldehyde, iron, lead, manganese, and zinc because the receiving water is not listed as impaired on the 303(d) list for these constituents.[1] As discussed in section IV.D.4, below, removal or relaxation of the effluent limits complies with federal and state antidegradation requirements. Thus, removal of the effluent limitations for aluminum, cadmium, chlorine residual,

[1] "*The exceptions in Section 303(d)(4) address both waters in attainment with water quality standards and those not in attainment, i.e. waters on the section 303(d) impaired waters list*." State Water Board Order WQ 2008-0006, Berry Petroleum Company, Poso Creek/McVan Facility.

delta-BHC, electrical conductivity, endrin aldehyde, iron, lead, manganese, and zinc meets the exception in CWA section 303(d)(4)(B).

b. **CWA section 402(o)(2).** CWA section 402(o)(2) provides several exceptions to the anti-backsliding regulations. CWA 402(o)(2)(B)(i) allows a renewed, reissued, or modified permit to contain a less stringent effluent limitation for a pollutant if information is available which was not available at the time of permit issuance (other than revised regulations, guidance, or test methods) and which would have justified the application of a less stringent effluent limitation at the time of permit issuance.

As described further in section IV.C.3.a of this Fact Sheet, updated information that was not available at the time Order R5-2010-0005 was issued indicates that aluminum, cadmium, chlorine residual, delta-BHC, electrical conductivity, endrin aldehyde, iron, lead, manganese, and zinc do not exhibit reasonable potential to cause or contribute to an exceedance of water quality objectives in the receiving water. The updated information that supports the relaxation of effluent limitations for these constituents includes the following:

i. **Aluminum.** Effluent monitoring data collected between January 2013 and August 2014 indicates that aluminum in the discharge does not exhibit reasonable potential to cause or contribute to an exceedance of the NAWQC chronic criterion.

ii. **Cadmium.** Effluent monitoring data collected between January 2013 and August 2014 and upstream receiving water monitoring collected between January 2012 and August 2014 indicates that cadmium in the discharge does not exhibit reasonable potential to cause or contribute to an exceedance of CTR criteria for the protection of freshwater aquatic life.

iii. **Chlorine Residual.** Updated information submitted on 3 March 2015 and 5 March 2015 regarding the operational protocol for maintenance cleaning of the membranes indicates that the discharge does not exhibit reasonable potential to cause or contribute to an exceedance of the NAWQC.

iv. **Electrical Conductivity.** Effluent monitoring data collected between January 2013 and August 2014 and upstream receiving water monitoring collected between January 2012 and August 2014 indicates that electrical conductivity in the discharge does not exhibit reasonable potential to cause or contribute to an exceedance of the agricultural water goal or the Secondary MCL.

v. **Iron.** Effluent monitoring data collected between January 2013 and August 2014 indicates that iron in the discharge does not exhibit reasonable potential to cause or contribute to an exceedance of the Secondary MCL.

vi. **Lead.** Effluent monitoring data collected between January 2013 and August 2014 and upstream receiving water monitoring collected between January 2012 and August 2014 indicates that lead in the discharge does not exhibit reasonable potential to cause or contribute to an exceedance of CTR criteria for the protection of freshwater aquatic life.

vii. **Manganese**. Effluent monitoring data collected between January 2013 and August 2014 indicates that manganese in the discharge does not exhibit reasonable potential to cause or contribute to an exceedance of the Secondary MCL.

viii. **Persistent Chlorinated Hydrocarbon Pesticides (Delta-BHC and Endrin Aldehyde).** Effluent monitoring data collected between January 2013 and August 2014 and upstream receiving water monitoring collected between January 2012 and October 2012 for delta-BHC and endrin aldehyde indicates that the discharge does not exhibit reasonable potential to cause or contribute to an exceedance of the Basin Plan objective or the CTR criteria for individual persistent chlorinated hydrocarbon pesticides.

ix. **Zinc**. Effluent monitoring data collected between January 2013 and August 2014 and upstream receiving water monitoring collected between January 2012 and August 2014 indicates that zinc in the discharge does not exhibit reasonable potential to cause or contribute to an exceedance of CTR criteria for the protection of freshwater aquatic life.

Thus, removal of the effluent limitations for aluminum, cadmium, chlorine residual, delta-BHC, electrical conductivity, endrin aldehyde, iron, lead, manganese, and zinc from Order R5-2010-0005 is in accordance with CWA section 402(o)(2)(B)(i), which allows for the removal of effluent limitations based on information that was not available at the time of permit issuance.

4. Antidegradation Policies

As discussed in section II.E of this Fact Sheet, the Discharger is planning an upgrade and expansion project that would increase the design capacity of the Facility from 0.70 MGD to 0.875 MGD. Order R5-2010-0005 provided antidegradation findings and authorized an increase in the permitted flow to 0.875 MGD from the expanded Facility. This Order does not provide for an increase in flow or mass of pollutants to the receiving water beyond the levels authorized in Order R5-2010-0005. Therefore, a complete antidegradation analysis is not necessary. A summary of the complete antidegradation analysis approved by the Central Valley Water Board in 2010 and updated information since adoption of Order R5-2010-0005 is included below:

a. **Water quality parameters and beneficial uses which will be affected by increased flow and the extent of the impact.** The increased flow will not adversely impact beneficial uses of the receiving water or downstream receiving waters. All beneficial uses are maintained and protected. Order R5-2010-0005 provided for an increase in the volume and mass of pollutants discharged directly to the receiving water. 40 C.F.R. section 131.12 defines the following tier designations to describe water quality in the receiving water body.

Tier 1 Designation: Existing instream water uses and the level of water quality necessary to protect the existing uses shall be maintained and protected. (40 C.F.R. § 131.12)

Tier 2 Designation: Where the quality of waters exceed levels necessary to support propagation of fish, shellfish, and wildlife and recreation in and on the water, that quality shall be maintained and protected unless the State finds, after full satisfaction of the intergovernmental coordination and public participation provisions of the State's continuing planning process, that allowing lower water quality is necessary to accommodate important economic or social development in the area in which the waters are located. In allowing such degradation or lower water quality, the State shall assure water quality adequate to protect existing uses fully. Further, the State shall assure that there shall be achieved the highest statutory and regulatory requirements for all new and existing point sources and all cost-effective

and reasonable best management practices for nonpoint source control. (40 C.F.R. § 131.12)

The tier designation is assigned on a pollutant-by-pollutant basis. In Order R5-2010-0005, the Central Valley Water Board found that Orchard Creek was designated as a Tier 1 receiving water for aluminum, iron, manganese, and beta-BHC because these constituents were detected in the receiving water above water quality criteria.

Orchard Creek was designated as a Tier 2 receiving water for ammonia, arsenic, barium, boron, chloride, copper, electrical conductivity, endrin aldehyde, fluoride, methylene blue active substances, lead, mercury, nickel, nitrate, nitrite, sulfate, total dissolved solids, and zinc. Except for zinc, each of these Tier 2 parameters used less than 10 percent of available assimilative capacity in Orchard Creek. Thus, the proposed increased discharge was determined to be protective of beneficial uses and will maintain greater than 90 percent of assimilative capacity in Orchard Creek.

At the time Order R5-2010-0005 was issued the Discharger estimated that the increased discharge would result in the use of 20 percent of available assimilative capacity for zinc. Effluent limitations were established in Order R5-2010-0005 which was protective of beneficial uses. As discussed in section IV.C.3.a.xi of this Order, the discharge no longer exhibits reasonable potential to cause or contribute to an in-stream excursion above the CTR criteria for zinc and effluent limitations have not been retained in this Order. However, based on Facility performance the increased mass loading of zinc will have similar impacts to the receiving water. As discussed below, the antidegradation analysis evaluated whether allowance of an increase in zinc loading is in the best interest of the people of the State.

b. **Scientific Rationale for Determining Potential Lowering of Water Quality.** The rationale used in the antidegradation analysis is based on 40 C.F.R. section 131.12, U.S. EPA memorandum Regarding Tier 2 Antidegradation Reviews and Significance Thresholds (U.S. EPA 2005), U.S. EPA Region 9 Guidance on Implementing the Antidegradation Provisions of 40 CFR 131.12 (U.S. EPA 1987), State Water Board Resolution No. 68-16, a State Water Board 1987 policy memorandum to the Regional Water Boards, and an Administrative Procedures Update (APU 90-004) issued by the State Water Board to the Regional Water Boards.

The scientific rationale used in the antidegradation analysis to determine if the Order allows a lowering of water quality is to determine the reduction of assimilative capacity. Assimilative capacity was calculated on a mass-balanced, concentration basis and, for bioaccumulative constituents, calculated on a mass loading basis. This approach is consistent with recent U.S. EPA guidance and addresses a key objective of the antidegradation analysis to *"[c]ompare receiving water quality to the water quality objectives established to protect designated beneficial uses*" (APU 90-004). U.S. EPA has recommended ten (10) percent as a measure of significance for identifying those substantial lowerings of water quality that should receive a full tier 2 antidegradation review. APU 90-004 requires the consideration of "feasible alternative control measures" as part of the procedures for a complete antidegradation analysis.

The antidegradation analysis analyzed each pollutant detected in the effluent and receiving water to determine if the proposed increase in discharge from 0.35 MGD to 0.875 MGD authorized by Order R5-2010-0005 potentially allows significant increase of the amount of pollutants present in the upstream and downstream receiving water influenced by the proposed discharge. Pollutants that significantly

increased concentration or mass downstream required an alternatives analysis to determine whether implementation of alternatives to the proposed action would be in the best socioeconomic interest of the people of the region, and be to the maximum benefit of the people of the State. Details on the scientific rationale are discussed in detail in the antidegradation analysis.

The Central Valley Water Board concurs with this scientific approach.

c. **Alternative Control Measures.** The Discharger considered several alternatives that would reduce or eliminate the lowering of water quality resulting from the proposed increase in discharge from 0.35 MGD to 0.875 MGD. A number of effluent disposal alternatives were assessed to determine if any alternative would substantially reduce or eliminate the lowering of water quality as a result of the proposed increase in discharge from 0.35 MGD to 0.875 MGD. These alternatives are summarized below:

i. Connection to the City of Lincoln Wastewater System – Pumping and transmission facilities required to convey 100 percent of the wastewater generated by the expanded casino and hotel facilities to the City of Lincoln wastewater collection and treatment facilities would be constructed as part of the South Lincoln Regional Sewer System (SLRSS) project. The expanded wastewater treatment plant would not be constructed. The existing wastewater treatment plant would be decommissioned and effluent flow to Orchard Creek at this outfall location would cease.

This alternative was infeasible at the time Order R5-2010-0005 was adopted due to the lack of funding from other industrial and property owners to support the SLRSS project, as well as the lack of required easements and permits to construct the new gravity sewer line. An interim option was considered to connect to the City of Lincoln wastewater treatment plant (WWTP) with a smaller diameter force main than that proposed for the SLRSS project. However, this option was also infeasible due to the high costs, failure to meet the long-term needs of the Facility, lack of benefits to surrounding properties, high potential for odor due to excessive hydraulic retention time in the force main system, high power usage from pumping the wastewater a long distance, and the potential for spills if a force main break occurs. Additionally, because the City of Lincoln WWTP discharges wastewater to Auburn Ravine, to which Orchard Creek is tributary, this option would not decrease the discharge from the Facility to downstream waters, but would simply change the discharge location.

ii. Connection to the Placer County Wastewater System – Pumping and transmission facilities required to convey 100 percent of the wastewater generated by the expanded casino and hotel facilities to the South Placer Wastewater Authority wastewater collection facilities, for ultimate treatment at the City of Roseville's Pleasant Grove WWTP, would be constructed. The expanded wastewater treatment plant would not be constructed. The existing wastewater treatment plant would be decommissioned and effluent flow to Orchard Creek at this outfall location would cease.

This alternative was infeasible at the time Order R5-2010-0005 was adopted because the neither the existing sewer system nor the Pleasant Grove WWTP has sufficient capacity to accommodate the additional discharge from the Facility. Additional capacity at the Pleasant Grove WWTP will not be available until the next planned expansion is constructed. Because the next expansion

is driven by future development, due to the economic recession, this date was unknown. Further, the Facility is outside the service area of the Pleasant Grove WWTP, and, as such, the City of Roseville is under no obligation to serve the Facility.

iii. Onsite Treatment/Disposal to Spray Fields – The expanded wastewater treatment plant would be constructed, and spray fields would be used for disposal of the treated effluent. Water would be applied to the spray fields at agronomic rates throughout the year. Tailwater and runoff would be captured and returned to the disposal area. Seasonal storage would be required.

This alternative was infeasible at the time Order R5-2010-0005 was adopted because the amount of land necessary to dispose of the effluent from the Facility is not available. A water balance was performed and determined that 64 acres of spray fields and a large seasonal storage basin would be required to dispose of the effluent from the Facility. This amount of land is not available on the 49-acre, developed property that the Facility is located on. The land surrounding the property is currently a wetland mitigation bank, open space with protected vernal pools, and land used or proposed for urban/industrial development.

iv. Onsite treatment/Disposal to Leach Fields – The expanded wastewater treatment plant would be constructed, and conventional leach fields would be used for disposal of the treated effluent.

This alternative was infeasible at the time Order R5-2010-0005 was adopted due to incompatible soils conditions underlying the site and surrounding area, as well as the lack of available land.

v. Additional Treatment to Remove Zinc – As described above, the proposed flow increase would result in the use of 20 percent of available assimilative capacity. The Discharger evaluated additional alternatives for reducing levels of zinc in the discharge. The Facility utilizes a state-of-the-art membrane bioreactor (MBR) treatment process with ultrafiltration membranes that provide the highest degree of filtration with the exception of reverse osmosis. Treating the effluent with reverse osmosis was not considered a feasible alternative due to the high capital and operating costs, high rates of power consumption, and high rates of greenhouse gas generation associated with the construction and operation of a reverse osmosis treatment system.

As part of the Discharger's 26 October 2009 infeasibility report for zinc, the Discharger proposed a series of actions to address zinc in the discharge, including preparation of a Pollution Prevention Plan, chemical addition of passivation agents to coat the interior of distribution pipes to reduce corrosion, and chemical addition of precipitants to remove zinc. These measures, along with the current use of MBR technology, were expected to provide best practical, treatment and control (BPTC) for the discharge.

The Discharger evaluated each of these alternatives in detail in the Thunder Valley WWTP Expansion Water/Wastewater Feasibility Study (Hydroscience Engineers, 2007), and further in supplemental information submitted to the Central Valley Water Board on 26 October 2009. As described above, the detailed analysis did not find that treatment at alternative facilities was feasible. The detailed analysis found that land disposal was not feasible because of local land use patterns and restrictions, widespread occurrence of vernal pools over the potential disposal site, and

unsuitable soils. None of the feasible alternatives evaluated would substantially reduce or eliminate significant water quality impacts of the proposed action, because the proposed action would not significantly degrade water quality. Some of the alternatives may result in water quality effects elsewhere, or other environmental impacts, that are worse than those identified for the proposed action.

In the July 2014 ROWD, the Discharger indicated that they are not aware of any changes that would affect the potential feasibility of any of the alternatives previously evaluated. The Discharger must consider, at a minimum, whether regionalization has become feasible prior to the commencement of construction of the second phase of the Thunder Valley Casino Upgrade Project to increase the maximum daily effluent flow to 0.875 MGD.

With regards to additional treatment for zinc, the Discharger submitted a Pollution Prevention Plan (PPP) on 28 January 2011 and subsequently completed evaluation of three control measures: 1) source reduction, 2) wastewater metals precipitation, and 3) potable water distribution treatment. Source reduction sampling and analysis and source investigation were completed in 2012. The on-site fire station was identified as having higher effluent concentrations of zinc when compared with other on-site sources. Wastewater metals precipitation evaluation in 2011 included bench testing, which indicated that precipitation of wastewater metals was ineffective. Potable water distribution treatment was completed in early 2012 and involved the dosing of a chemical to coat the piping to reduce leaching of metals. Stannous chloride was initially selected to coat the piping, however, it is no longer approved by the NSF (National Science Foundation). Other chemicals were researched including a trial of orthophosphate to mitigate the corrosive effects of the potable water source on distribution piping.

Control Measure 4) Hardness Adjustment is currently being evaluated and consists of two parts; 4a) involves the ongoing Blended Water Supply investigation and 4b) involves hardness adjustment with CBA-45, which was pilot tested in July and August 2013. The intent was to increase the hardness of the potable water by chemical addition to reduce corrosivity on piping and improve Facility performance. CBA-45 is a custom blended alkali which was applied at varying dosages into 55 gallon samples of source water and/or blended water. Test results indicate that pH increases significantly with dosage of CBA-45. With an effluent pH upper limit of 8.5, the modest gain in hardness achieved by bringing the water source close to that pH limit does not appear to be an effective means of hardness control, and increases the risk of exceeding the pH limit.

Control Measure 4a) Blended Water Supply evaluation started in January 2013 and is ongoing. This control measure tests a blended water supply of up to 15% well water with 85% Placer County Water Agency water. The Discharger monitors four locations for temperature, pH, EC and total hardness, along with zinc. For zinc, the results indicate a downward trend in concentrations, indicating that an increase in source water hardness may have a beneficial.

d. **Socioeconomic Evaluation.** The objective of the socioeconomic analysis was to determine if the lowering of Orchard Creek water quality is in the maximum interest of the people of the State. The socioeconomic evaluation considered the social benefits of the Facility expansion and resulting increase in flow to Orchard Creek, including increases in local employment, increases in taxes and fees paid to local agencies, increased support/patronage of local businesses, and availability of local community social and cultural resources. Without the expansion project, these

numerous short- and long-term benefits to the United Auburn Indian Community, surrounding local communities, Placer County, and the State would not occur.

e. **Justification for Allowing Degradation**. Potential degradation identified in the Antidegradation Analysis due to Order R5-2010-0005 and this Order is justified by the following considerations:

i. Implementation of alternatives does not provide important socioeconomic benefit to the people of the region, nor do they provide maximum benefit to the people of the State. The alternatives to the proposed project would inhibit socioeconomic growth making it economically infeasible for any new development to occur.

ii. The Discharger's planned wastewater treatment facility will produce Title 22 tertiary treated effluent that will result in minimal water quality degradation. The Discharger's planned wastewater treatment process will meet or exceed the highest statutory and regulatory requirements which meets or exceeds BPTC;

iii. The Order is fully protective of beneficial uses of Orchard Creek. The anticipated water quality changes in Orchard Creek will not reduce or impair its designated beneficial uses and is consistent with State and federal antidegradation policies;

iv. No feasible alternatives currently exist to reduce the impacts available; and

v. The Discharger has fully satisfied the requirements of the intergovernmental coordination and public participation provisions of the State's continuing planning process concurrent with the public participation period of Order R5-2010-0005 and this Order.

The Order requires compliance with applicable federal technology-based standards and with WQBEL's where the discharge could have the reasonable potential to cause or contribute to an exceedance of water quality standards. The permitted discharge is consistent with the antidegradation provisions of 40 C.F.R. section 131.12 and State Water Board Resolution No. 68-16. Compliance with these requirements will result in the use of best practicable treatment or control of the discharge. The impact on existing water quality will be insignificant.

This Order removes effluent limitations for aluminum, cadmium, chlorine residual, delta-BHC, electrical conductivity, endrin aldehyde, iron, lead, manganese, and zinc based on updated information demonstrating that the effluent does not cause or contribute to an exceedance of the applicable water quality criteria or objectives in the receiving water. This Order also relaxes the averaging period for the mass-based effluent limitation to be consistent with performance-based mass limitations assigned to other recently adopted permits in the region. The removal and relaxation of WQBEL's for these parameters will not results in an increase in pollutants concentration or loading, a decrease in the level of treatment or control, or a reduction of water quality. Therefore, the Central Valley Water Board finds that the relaxation of the effluent limitations does not result in an increase in pollutants or any additional degradation of the receiving water. Thus, the removal and relaxation of effluent limitations is consistent with the antidegradation provisions of 40 C.F.R. section 131.12 and State Water Board Resolution No. 68-16.

5. Stringency of Requirements for Individual Pollutants

This Order contains both technology-based effluent limitations and WQBEL's for individual pollutants. The technology-based effluent limitations consist of restrictions on flow and percent removal requirements for BOD_5 and TSS. Restrictions on these parameters are discussed in section IV.B of this Fact Sheet. This Order's technology-based pollutant restrictions implement the minimum, applicable federal technology-based requirements. In addition, this Order contains effluent limitations more stringent than the minimum, federal technology-based requirements that are necessary to meet water quality standards.

WQBEL's have been derived to implement water quality objectives that protect beneficial uses. Both the beneficial uses and the water quality objectives have been approved pursuant to federal law and are the applicable federal water quality standards. To the extent that toxic pollutant WQBEL's were derived from the CTR, the CTR is the applicable standard pursuant to 40 C.F.R. section 131.38. The procedures for calculating the individual WQBEL's for priority pollutants are based on the CTR implemented by the SIP, which was approved by U.S. EPA on 18 May 2000. All beneficial uses and water quality objectives contained in the Basin Plan were approved under state law and submitted to and approved by U.S. EPA prior to 30 May 2000. Any water quality objectives and beneficial uses submitted to U.S. EPA prior to 30 May 2000, but not approved by U.S. EPA before that date, are nonetheless "*applicable water quality standards for purposes of the CWA*" pursuant to 40 C.F.R. section 131.21(c)(1). Collectively, this Order's restrictions on individual pollutants are no more stringent than required to implement the requirements of the CWA.

Summary of Final Effluent Limitations
Discharge Point 001

Table F-18. Summary of Final Effluent Limitations

Parameter	Units	Effluent Limitations					Basis[1]
		Average Monthly	Average Weekly	Maximum Daily	Instantaneous Minimum	Instantaneous Maximum	
Flow	MGD	--	--	0.70[2]/ 0.875[3]	--	--	DC
Conventional Pollutants							
Biochemical Oxygen Demand (5-day @ 20°C)	mg/L	10	15	20	--	--	TTC
	lbs/day[2]	58	88	117	--	--	
	lbs/day[3]	73	109	146	--	--	
	% Removal	85	--	--	--	--	CFR.
pH	standard units	--	--	--	6.5	8.5	BP
Total Suspended Solids	mg/L	10	15	20	--	--	TTC
	lbs/day[2]	58	88	117	--	--	
	lbs/day[3]	73	109	146	--	--	
	% Removal	85	--	--	--	--	CFR.
Priority Pollutants							
Mercury, Total Recoverable	grams/year	1.1[4]	--	--	--	--	PB

Parameter	Units	Effluent Limitations					Basis[1]
		Average Monthly	Average Weekly	Maximum Daily	Instantaneous Minimum	Instantaneous Maximum	
Non-Conventional Pollutants							
Ammonia Nitrogen, Total (as N)	mg/L	1.1	1.8	--	--	--	NAWQC
	lbs/day[2]	6.4	11	--	--	--	
	lbs/day[3]	8.0	13	--	--	--	
Nitrate Plus Nitrite (as N)	mg/L	10	20	--	--	--	MCL
Total Coliform Organisms	MPN/100 mL	--	2.2[5]	23[6]	--	240	Title 22
Acute Toxicity	% Survival	70[7]/90[8]	--	--	--	--	BP
Chronic Toxicity	TUc	--	--	Narrative[9]	--	--	BP

[1] DC – Based on the design capacity of the Facility.
TTC – Based on tertiary treatment capability. These effluent limitations reflect the capability of a properly operated tertiary treatment plant.
CFR. – Based on secondary treatment standards contained in 40 C.F.R. part 133.
BP – Based on water quality objectives contained in the Basin Plan.
PB – Based on Facility performance.
NAWQC – Based on U.S. EPA's National Ambient Water Quality Criteria for the protection of freshwater aquatic life.
MCL – Based on the Primary Maximum Contaminant Level.
Title 22 – Based on CA Department of Public Health Reclamation Criteria, CCR, Division 4, Chapter 3 (Title 22).

[2] Based on a peak design flow of 0.70 MGD, effective immediately and until Executive Officer's written approval of flow increase (Special Provision VI.C.6.b).

[3] Based on a peak design flow of 0.875 MGD, effective upon Executive Officer's written approval of flow increase (Special Provision VI.C.6.b).

[4] For a calendar year, the total annual mass discharge of total mercury shall not exceed 1.1 grams/year.

[5] Applied as a 7-day median effluent limitation.

[6] Not to be exceeded more than once in any 30-day period.

[7] 70% minimum of any one bioassay.

[8] 90% median for any three consecutive bioassays.

[9] There shall be no chronic toxicity in the effluent discharge.

E. Interim Effluent Limitations – Not Applicable

F. Land Discharge Specifications – Not Applicable

G. Recycling Specifications – Not Applicable

The Discharger uses tertiary treated wastewater to irrigate on-site landscaping for exterior decorative fountains. Ultra filtered disinfected (recycled) water is re-used for irrigation of approximately 12 acres of ornamental landscaping on trust land. In general, nearly 50,000 gallons of treated wastewater are re-used each day for landscape irrigation, on an annual average. In hot summer months, the irrigation recycling rate increases to nearly double, up to 100,000 gpd.

The recycled water has no impact on groundwater quality and the Discharger maintains electronic records of flow and coliform results for U.S. EPA and Indian Health Services as all

recycled water uses are on trust land. Therefore, the recycling specifications are not applicable to the Discharger.

V. RATIONALE FOR RECEIVING WATER LIMITATIONS

A. Surface Water

1. CWA section 303(a-c), requires states to adopt water quality standards, including criteria where they are necessary to protect beneficial uses. The Central Valley Water Board adopted water quality criteria as water quality objectives in the Basin Plan. The Basin Plan states that "[t]*he numerical and narrative water quality objectives define the least stringent standards that the Regional Water Board will apply to regional waters in order to protect the beneficial uses.*" The Basin Plan includes numeric and narrative water quality objectives for various beneficial uses and water bodies. This Order contains receiving surface water limitations based on the Basin Plan numerical and narrative water quality objectives for bacteria, biostimulatory substances, color, chemical constituents, dissolved oxygen, floating material, oil and grease, pH, pesticides, radioactivity, suspended sediment, settleable substances, suspended material, tastes and odors, temperature, toxicity, and turbidity.

   a. **pH**. Order R5-2010-0005 established a receiving water limitation for pH specifying that discharges from the Facility shall not cause the ambient pH to change by more than 0.5 units based on the water quality objective for pH in the Basin Plan. The Central Valley Water Board adopted Resolution R5-2007-0136 on 25 October 2007, amending the Basin Plan to delete the portion of the pH water quality objective that limits the change in pH to 0.5 units and the allowance of averaging periods for pH. The Basin Plan amendment has been approved by the State Water Board, the Office of Administrative Law, and U.S. EPA. Consistent with the revised water quality objective in the Basin Plan, this Order does not require a receiving water limitation for pH change.

   In Finding No. 14 of Resolution R5-2007-0136 the Central Valley Water Board found that the change in the pH receiving water objective is consistent with the State Water Board Resolution No. 68-16, in that the changes to water quality objectives (i) consider maximum benefit to the people of the State, (ii) will not unreasonably affect present and anticipated beneficial use of waters, and (iii) will not result in water quality less than that prescribed in policies, and is consistent with the federal Antidegradation Policy (40 C.F.R. § 131.12).

   Ammonia is the only constituent in the discharge regulated by this Order directly related to pH. The fixed ammonia effluent limitations in this Order are based on reasonable worse-case conditions. Although ammonia criteria are based on pH, and the pH receiving water limitations are more lenient in this Order than in the previous permit, the fixed ammonia limits are developed to protect under worse-case pH conditions. Therefore the relaxation of the pH receiving water limitation will protect aquatic life and other beneficial uses and will not unreasonably affect present and anticipated beneficial uses nor result in water quality less than described in applicable policies. The relaxation of the receiving water limitation is not expected to cause other impacts on water quality. The Central Valley Water Board finds that the relaxation of the pH receiving water limitation (i) is to the maximum benefit to the people of the State, (ii) will not unreasonably affect present and anticipated beneficial use of waters, and (iii) will not result in water quality less than that prescribed in policies, and is consistent with the federal Antidegradation Policy (40 C.F.R. § 131.12).

The revised receiving water limitation for pH, which is based on the amendment to the Basin Plan's pH water quality objective, reflects current scientifically supported pH requirements for the protection of aquatic life and other beneficial uses. The revised receiving water limitation for pH is more consistent with the current U.S. EPA recommended criteria and is fully protective of aquatic life and the other beneficial uses listed in the Basin Plan. Changes in pH when pH is maintained within the range of 6.5 to 8.5 are neither beneficial nor adverse and, therefore, are not considered to be degradation in water quality. Attempting to restrict pH changes to 0.5 pH units would incur substantial costs without demonstrable benefits to beneficial uses. Thus, any changes in pH that would occur under the revised pH limitation would not only be protective of beneficial uses, but also would be consistent with maximum benefit to people of the State. Therefore the proposed amendment will not violate antidegradation policies.

b. **Turbidity.** Order R5-2010-0005 established a receiving water limitation for turbidity specifying that discharges from the Facility shall not cause the turbidity to increase more than 1 NTU where natural turbidity is between 0 and 5 NTU based on the water quality objective for turbidity in the Basin Plan. The Central Valley Water Board adopted Resolution R5-2007-0136 on 25 October 2007, amending the Basin Plan to limit turbidity to 2 NTU when the natural turbidity is less than 1 NTU. The Basin Plan amendment has been approved by the State Water Board, the Office of Administrative Law, and U.S. EPA. Consistent with the revised water quality objective in the Basin Plan, this Order limits turbidity to 2 NTU when the natural turbidity is less than 1 NTU.

In Finding No. 14 of Resolution R5-2007-0136 the Central Valley Water Board found that the change in the turbidity receiving water objective is consistent with the State Water Board Resolution No. 68-16, in that the changes to water quality objectives (i) consider maximum benefit to the people of the State, (ii) will not unreasonably affect present and anticipated beneficial use of waters, and (iii) will not result in water quality less than that prescribed in policies, and is consistent with the federal Antidegradation Policy (40 C.F.R. § 131.12).

This Order includes operational specifications that require the Discharger to operate the treatment system to insure that turbidity shall not exceed 0.2 NTU more than 5 percent of the time within a 24 hour period, and 0.5 NTU, at any time. Because this Order limits the average daily discharge of turbidity to 0.2 NTU, the Order will be protective of the receiving water under all natural background conditions as defined in the Basin Plan’s revised water quality objective for turbidity. The relaxation of the turbidity receiving water limitation will protect aquatic life and other beneficial uses and will not unreasonably affect present and anticipated beneficial uses nor result in water quality less than described in applicable policies. The relaxation of the receiving water limitation is not expected to cause other impacts on water quality. The Central Valley Water Board finds that the relaxation of the turbidity receiving water limitation (i) is to the maximum benefit to the people of the State, (ii) will not unreasonably affect present and anticipated beneficial use of waters, and (iii) will not result in water quality less than that prescribed in policies, and is consistent with the federal Antidegradation Policy (40 C.F.R. § 131.12).

The revised receiving water limitation for turbidity, which is based on the amendment to the Basin Plan's turbidity water quality objective, reflects current scientifically supported turbidity requirements for the protection of aquatic life and other beneficial uses and, therefore, will be fully protective of aquatic life and the other beneficial uses listed in the Basin Plan. Changes in turbidity allowed by the

revised receiving water limitation, when ambient turbidity is below 1 NTU, would not adversely affect beneficial uses and would maintain water quality at a level higher than necessary to protect beneficial uses. Restricting low-level turbidity changes further may require costly upgrades, which would not provide any additional protection of beneficial uses. Thus, any changes in turbidity that would occur under the amended turbidity receiving water limitation would not only be protective of beneficial uses, but also would be consistent with maximum benefit to people of the State. Therefore, the relaxed receiving water limitations for turbidity will not violate antidegradation policies.

B. Groundwater

1. The beneficial uses of the underlying groundwater are municipal and domestic supply, industrial service supply, industrial process supply, and agricultural supply.

2. Basin Plan water quality objectives include narrative objectives for chemical constituents, tastes and odors, and toxicity of groundwater. The toxicity objective requires that groundwater be maintained free of toxic substances in concentrations that produce detrimental physiological responses in humans, plants, animals, or aquatic life. The chemical constituent objective states groundwater shall not contain chemical constituents in concentrations that adversely affect any beneficial use. The tastes and odors objective prohibits taste- or odor-producing substances in concentrations that cause nuisance or adversely affect beneficial uses. The Basin Plan also establishes numerical water quality objectives for chemical constituents and radioactivity in groundwaters designated as municipal supply. These include, at a minimum, compliance with MCLs in Title 22 of the CCR. The bacteria objective prohibits coliform organisms at or above 2.2 MPN/100 mL. The Basin Plan requires the application of the most stringent objective necessary to ensure that waters do not contain chemical constituents, toxic substances, radionuclides, taste- or odor-producing substances, or bacteria in concentrations that adversely affect municipal or domestic supply, agricultural supply, industrial supply or some other beneficial use.

3. Groundwater limitations are required to protect the beneficial uses of the underlying groundwater. The Discharger contains all wastewater flows in systems that do not utilize land disposal. All wastewater is contained in treatment units. The wastewater collection and treatment systems do not threaten groundwater quality. Consistent with Order R5-2010-0005, this Order includes a groundwater limitation requiring that the discharge from the Facility shall not cause the underlying groundwater to be degraded.

VI. RATIONALE FOR PROVISIONS

A. Standard Provisions

Standard Provisions, which apply to all NPDES permits in accordance with 40 C.F.R. section 122.41, and additional conditions applicable to specified categories of permits in accordance with 40 C.F.R. section 122.42, are provided in Attachment D. The Discharger must comply with all standard provisions and with those additional conditions that are applicable under section 122.42.

Sections 122.41(a)(1) and (b) through (n) of 40 C.F.R. establish conditions that apply to all state-issued NPDES permits. These conditions must be incorporated into the permits either expressly or by reference. If incorporated by reference, a specific citation to the regulations must be included in the Order. Section 123.25(a)(12) of 40 C.F.R. allows the state to omit or modify conditions to impose more stringent requirements. In accordance with 40 C.F.R. section 123.25, this Order omits federal conditions that address enforcement authority

specified in 40 C.F.R. sections 122.41(j)(5) and (k)(2) because the enforcement authority under the Water Code is more stringent. In lieu of these conditions, this Order incorporates by reference Water Code section 13387(e).

B. Special Provisions

1. Reopener Provisions

a. **Mercury.** This provision allows the Central Valley Water Board to reopen this Order in the event mercury is found to be causing toxicity based on acute or chronic toxicity test results, or if a TMDL program is adopted. In addition, this Order may be reopened if the Central Valley Water Board determines that a mercury offset program is feasible for dischargers subject to NPDES permits.

b. **Whole Effluent Toxicity.** This Order requires the Discharger to investigate the causes of, and identify corrective actions to reduce or eliminate effluent toxicity through a TRE. This Order may be reopened to include a numeric chronic toxicity limitation, a new acute toxicity limitation, and/or a limitation for a specific toxicant identified in the TRE. Additionally, if a numeric chronic toxicity water quality objective is adopted by the State Water Board, this Order may be reopened to include a numeric chronic toxicity limitation based on that objective.

c. **Water Effects Ratio (WER) and Metal Translators.** A default WER of 1.0 has been used in this Order for calculating criteria for applicable inorganic constituents, except for copper. In addition, default dissolved-to-total metal translators have been used to convert water quality objectives from dissolved to total recoverable. If the Discharger performs studies to determine site-specific WERs and/or site-specific dissolved-to-total metal translators, this Order may be reopened to modify the effluent limitations for the applicable inorganic constituents.

d. **Ultraviolet Light (UV) Disinfection Operating Specifications .** UV system operating specifications are required to ensure that the UV system is operated to achieve the required pathogen removal. UV disinfection system specifications and monitoring and reporting requirements are required to ensure that adequate UV dosage is applied to the wastewater to inactivate pathogens (e.g., viruses) in the wastewater. UV dosage is dependent on several factors such as UV transmittance, UV power setting, wastewater turbidity, and wastewater flow through the UV disinfection system. The UV specifications in this Order are based on the National Water Research Institute (NWRI) and American Water Works Association Research Foundation (AWWRF) "*Ultraviolet Disinfection Guidelines for Drinking Water and Water Reuse"* first published in December 2000 and revised as a Third Edition dated August 2012 (NWRI guidelines). If the Discharger conducts a site-specific UV engineering study that identifies site-specific UV operating specifications that will achieve the virus inactivation required by Title 22 for disinfected tertiary recycled water, this Order may be reopened to modify the UV specifications, in accordance with Reopener Provision VI.C.1.f.

e. **Ammonia.** Ammonia effluent limitations contained in this Order are based on the assumption that mussels are absent in Orchard Creek. The Discharger has committed to the CVCWA Freshwater Collaborative Mussel Study to determine, with certainty, if mussels are present in Orchard Creek. This Order may be reopened to modify the effluent limitations for ammonia with respect to the outcome of the CVCWA mussel study, in accordance with Reopener Provision IV.C.1.e.

2. Special Studies and Additional Monitoring Requirements

a. **Chronic Whole Effluent Toxicity Requirements.** The Basin Plan contains a narrative toxicity objective that states, "*All waters shall be maintained free of toxic substances in concentrations that produce detrimental physiological responses in human, plant, animal, or aquatic life.*" (Basin Plan at page III-8.00). Based on whole effluent chronic toxicity testing performed by the Discharger from January 2013 through August 2014, the discharge has reasonable potential to cause or contribute to an in-stream excursion above of the Basin Plan's narrative toxicity objective.

This provision provides a numeric toxicity monitoring trigger and requirements for accelerated monitoring, as well as requirements for TRE initiation if toxicity has been demonstrated during accelerated monitoring, except for chronic reproductive toxicity to *Ceriodaphnia dubia* in which the Discharger may choose to conduct a site-specific toxicity evaluation study instead.

Monitoring Trigger. A numeric toxicity monitoring trigger of **>1** TUc (where TUc = 100/NOEC) is applied in the provision, because this Order does not allow any dilution for the chronic condition. Therefore, a TRE or toxicity evaluation study is triggered when the effluent exhibits toxicity at 100% effluent.

Accelerated Monitoring. The provision requires accelerated WET testing when a regular WET test result exceeds the monitoring trigger. The purpose of accelerated monitoring is to determine, in an expedient manner, whether there is toxicity before requiring the implementation of a TRE. Due to possible seasonality of the toxicity, the accelerated monitoring should be performed in a timely manner, preferably taking no more than 2 to 3 months to complete.

The provision requires accelerated monitoring consisting of four chronic toxicity tests in a six-week period (i.e., one test every two weeks) using the species that exhibited toxicity. Guidance regarding accelerated monitoring and TRE initiation is provided in the *Technical Support Document for Water Quality-based Toxics Control,* EPA/505/2-90-001, March 1991 (TSD). The TSD at page 118 states, "*EPA recommends if toxicity is repeatedly or periodically present at levels above effluent limits more than 20 percent of the time, a TRE should be required.*" Therefore, four accelerated monitoring tests are required in this provision. If no toxicity is demonstrated in the four accelerated tests, then it demonstrates that toxicity is not present at levels above the monitoring trigger more than 20 percent of the time (only 1 of 5 tests are toxic, including the initial test). However, notwithstanding the accelerated monitoring results, if there is adequate evidence of effluent toxicity (i.e. toxicity present exceeding the monitoring trigger more than 20 percent of the time), the Executive Officer may require that the Discharger initiate a TRE.

See the WET Accelerated Monitoring Flow Chart (Figure F-1), below, for further clarification of the accelerated monitoring requirements and for the decision points for determining the need for TRE initiation.

TRE Guidance. The Discharger submitted a TRE Report in April 2014 in accordance with U.S. EPA guidance. Numerous guidance documents are available, as identified below:

i. *Toxicity Reduction Evaluation Guidance for Municipal Wastewater Treatment Plants*, EPA/833-B-99/002, August 1999.

ii. *Generalized Methodology for Conducting Industrial Toxicity Reduction Evaluations (TREs)*, EPA/600/2-88/070, April 1989.

iii. *Methods for Aquatic Toxicity Identification Evaluations: Phase I Toxicity Characterization Procedures, Second Edition*, EPA 600/6-91/003, February 1991.

iv. *Toxicity Identification Evaluation: Characterization of Chronically Toxic Effluents, Phase I*, EPA/600/6-91/005F, May 1992.

v. *Methods for Aquatic Toxicity Identification Evaluations: Phase II Toxicity Identification Procedures for Samples Exhibiting Acute and Chronic Toxicity, Second Edition*, EPA/600/R-92/080, September 1993.

vi. *Methods for Aquatic Toxicity Identification Evaluations: Phase III Toxicity Confirmation Procedures for Samples Exhibiting Acute and Chronic Toxicity, Second Edition*, EPA 600/R-92/081, September 1993.

vii. *Methods for Measuring the Acute Toxicity of Effluents and Receiving Waters to Freshwater and Marine Organisms, Fifth Edition*, EPA-821-R-02-012, October 2002.

viii. *Short-term Methods for Estimating the Chronic Toxicity of Effluents and Receiving Waters to Freshwater Organisms, Fourth Edition*, EPA-821-R-02-013, October 2002.

ix. *Technical Support Document for Water Quality-based Toxics Control*, EPA/505/2-90-001, March 1991.

Figure F-1
WET Accelerated Monitoring Flow Chart

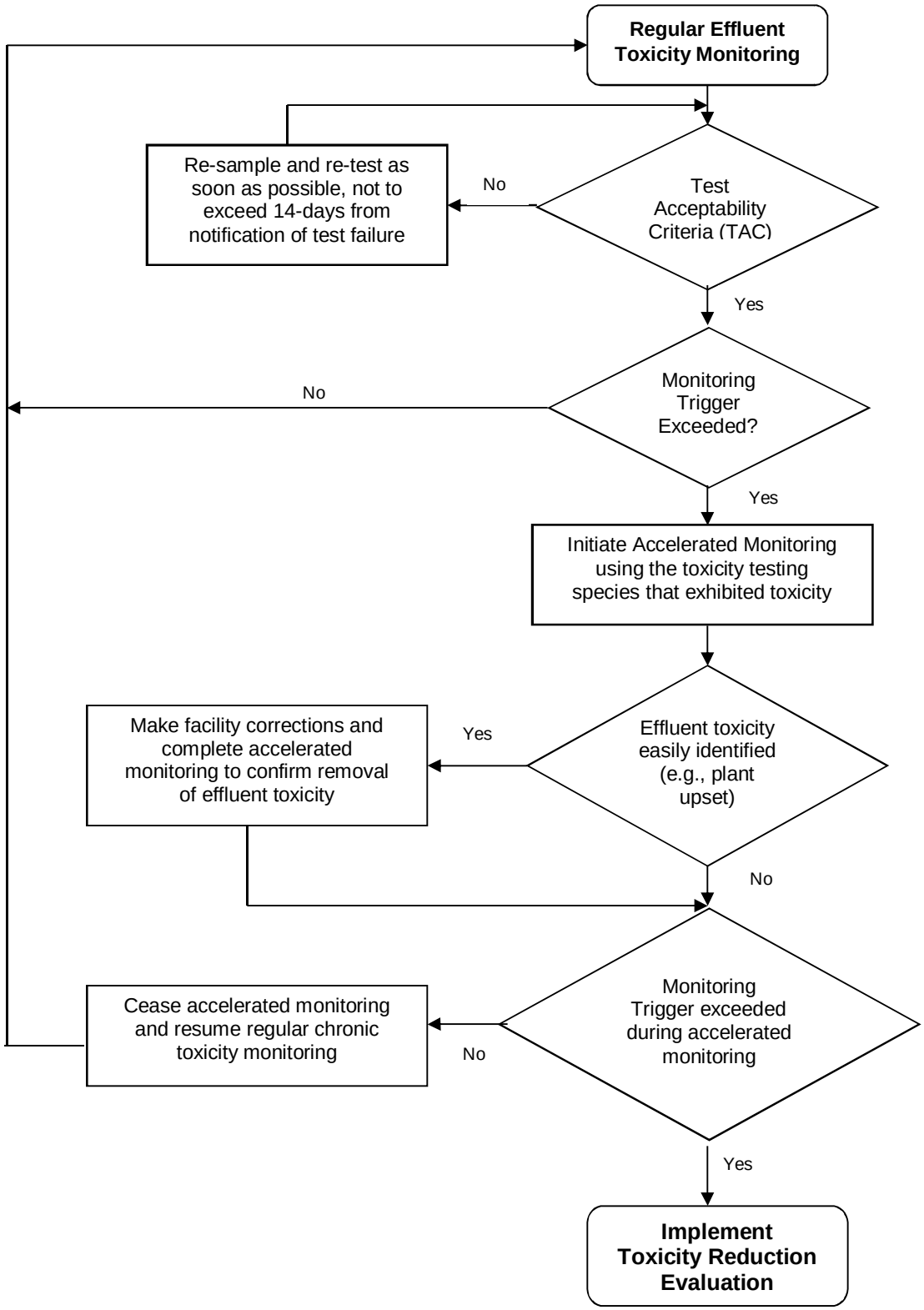

Site-specific Toxicity Evaluation Study. The Facility provides tertiary-level treatment of the municipal wastewater disinfected by UV treatment. There are no industrial dischargers to the Facility. The tertiary treatment process uses immersed membrane bioreactors that produce low turbidity effluent at 0.07 NTUs on a daily average.

The discharge is a high-quality effluent that indicates low-level toxicity at times. The Discharger just completed a TIE that was inconclusive. Therefore, if the discharge exceeds the numeric toxicity monitoring trigger, this Order allows the Discharger to conduct a site-specific toxicity evaluation study, instead of the accelerated monitoring or TRE specified in this provision, to determine effective control measures to prevent effluent chronic reproductive toxicity to *Ceriodaphnia dubia* in the future. The Discharger may conduct the study individually or as part of a coordinated group effort with other dischargers that evaluate low level and intermittent toxicity in effluent disinfected by an UV system and/or evaluate the toxic effects of low hardness effluent. Therefore this provision allows the Discharger to conduct a site-specific toxicity evaluation study approved by the Executive Officer.

3. Best Management Practices and Pollution Prevention

a. **Salinity Evaluation and Minimization Plan.** An Evaluation and Minimization Plan for salinity is required to be implemented in this Order to ensure adequate measures are developed and implemented by the Discharger to reduce the discharge of salinity to Orchard Creek.

4. Construction, Operation, and Maintenance Specifications

a. Consistent with Order R5-2010-0005, this Order requires that the treatment facilities be designed, constructed, operated, and maintained to prevent inundation or washout due to floods with a 100-year return frequency.

b. **Filtration System Operating Specifications.** Turbidity is included as an operational specification as an indicator of the effectiveness of the filtration system for providing adequate disinfection. The tertiary treatment process utilized at this Facility is capable of reliably meeting a turbidity limitation of 0.2 nephelometric turbidity units (NTU) as a daily average. Failure of the treatment system such that virus removal is impaired would normally result in increased particles in the effluent, which result in higher effluent turbidity and could impact UV dosage. Turbidity has a major advantage for monitoring filter performance, allowing immediate detection of filter failure and rapid corrective action. The operational specification requires that turbidity prior to disinfection shall not exceed 0.2 NTU more than 5 percent of the time and an instantaneous maximum of 0.5 NTU.

c. **Ultraviolet Light (UV) Disinfection System Operating Specifications.** This Order requires that wastewater shall be oxidized, coagulated, filtered, and adequately disinfected pursuant to the DDW reclamation criteria, CCR, Title 22, division 4, chapter 3, (Title 22), or equivalent. To ensure that the UV disinfection system is operated to achieve the required pathogen removal, this Order includes effluent limits for total coliform organisms, filtration system operating specifications, and UV disinfection system operating specifications. Compliance with total coliform effluent limits alone does not ensure that pathogens in the municipal wastewater have been deactivated by the UV disinfection system. Compliance with the effluent limits and the filtration system and UV disinfection operating specifications demonstrates compliance with the equivalency to Title 22 disinfection requirement.

The NWRI guidelines include UV operating specifications for compliance with Title 22. For water recycling in accordance with Title 22, the UV system shall be an approved system included in the *Treatment Technology Report for Recycled Water*, December 2009 (or a later version, as applicable) published by the DDW. The UV system shall also conform to all requirements and operating specifications of the NWRI guidelines. A memorandum dated 1 November 2004 issued by DDW to Regional Water Board executive officers recommended that provisions be included in permits for water recycling treatment plants employing UV disinfection requiring dischargers to establish fixed cleaning frequency of lamp sleeves, as well as, include provisions that specify minimum delivered UV dose that must be maintained (per the NWRI Guidelines).

For membrane filtration, the NWRI Guidelines recommend a minimum hourly average UV dose of 80 mJ/cm^2. Therefore, this Order includes UV operating specifications requiring a minimum hourly average UV dose of 80 mJ/cm^2 and a minimum hourly average UV transmittance of 65%, per the NWRI Guidelines. If the Discharger conducts a site-specific UV engineering study that demonstrates a lower UV dose meets a Title 22 equivalent virus removal, this Order may be reopened to revise the UV operating specifications accordingly.

5. Special Provisions for Municipal Facilities (POTW's Only)

a. **Sanitary Sewer System Operation, Maintenance, and Overflow Protection.** The Discharger shall maintain all portions of the wastewater collection system to assure compliance with this Order. Collection system overflows and/or discharges are prohibited by this Order.

All violations of this Order must be reported as specified in the Standard Provisions (Attachment D) and the public shall be notified, in coordination with DDW or U.S. EPA, in areas that have been contaminated with sewage. All parties with a reasonable potential for exposure to a sewage overflow shall be notified.

The Facility does not consist of a collection system; rather, the wastewater flows are from the casino and on-site areas.

6. Other Special Provisions

a. Consistent with Order R5-2010-0005, this Order requires wastewater to be oxidized, coagulated, filtered, and adequately disinfected pursuant to DDW reclamation criteria, CCR, Title 22, division 4, chapter 3 (Title 22), or equivalent.

b. **Phase 2 Facility Expansion**. The Discharger is planning to expand the Facility to treat up to 0.875 MGD in Phase 2 of the Thunder Valley Casino Upgrade Project. Other alternatives have not been feasible. However, regionalization may become feasible prior to the need to complete Phase 2 of the Thunder Valley Casino Upgrade Project. This Order requires the Discharger to submit an updated alternatives analysis prior to commencement of construction of the Phase 2 Facility Expansion for approval by the Executive Officer. The alternatives analysis shall evaluate implementation of feasible alternative control measures which might reduce or eliminate the need for the increased discharge. The analysis must consider, at a minimum, whether regionalization has become feasible. This Order also includes additional requirements that must be met prior to an allowable increase in the flow rate.

c. **Regionalization**. The Discharger has committed to participating in a permanent gravity sewer line project connecting the Facility to the City of Lincoln Wastewater Treatment and Reclamation Facility in accordance with an MOU with the City of Lincoln. The gravity sewer line is not currently available due to lack of funding from other potential users and the lack of required easements and permits. The Discharger agreed in the MOU to connect to the gravity sewer line when it becomes available. The Central Valley Water Board adopted Resolution R5-2009-0028 in support of Regionalization, Reclamation, recycling, and Conservation for Wastewater Treatment Plants on 23 April 2009 which requires the Central Valley Water Board to facilitate and encourage opportunities for wastewater regionalization. As described further in Resolution R5-2009-0028, regionalization reduces the per capita costs of wastewater treatment and disposal and increases the technical and economic feasibility of providing a higher level of wastewater treatment. In accordance with Resolution R5-2009-0028, this Order requires the Discharger to submit to the Central Valley Water Board no later than 6 months prior to the anticipated completion of the gravity sewer line connection a time schedule for ceasing the discharge from the Facility to Orchard Creek and connecting to the permanent gravity sewer line. Any request for extension of the 1 year time schedule, or for continued discharge to Orchard Creek, shall be supported by an updated alternatives analysis demonstrating that connection within 1 year is not feasible and the proposed alternative meets the antidegradation provisions of 40 C.F.R. section 131.12 and Resolution 68-12.

7. Compliance Schedules – Not Applicable

VII. RATIONALE FOR MONITORING AND REPORTING REQUIREMENTS

CWA section 308 and 40 C.F.R. sections 122.41(h), (j)-(l), 122.44(i), and 122.48 require that all NPDES permits specify monitoring and reporting requirements. Water Code sections 13267 and 13383 also authorize the Central Valley Water Board to establish monitoring, inspection, entry, reporting, and recordkeeping requirements. The Monitoring and Reporting Program (MRP), Attachment E of this Order establishes monitoring, reporting, and recordkeeping requirements that implement federal and state requirements. The following provides the rationale for the monitoring and reporting requirements contained in the MRP for this Facility.

A. Influent Monitoring

1. Influent monitoring is required to collect data on the characteristics of the wastewater and to assess compliance with effluent limitations (e.g., BOD_5 and TSS reduction requirements). The monitoring frequency for flow (continuous) has been retained from Order R5-2010-0005.

2. The influent monitoring frequency for BOD_5 and TSS has been reduced from daily to weekly. This monitoring frequency is consistent with other similar facilities and the Central Valley Water Board finds that this frequency is sufficient to characterize the influent.

B. Effluent Monitoring

1. Pursuant to the requirements of 40 C.F.R. section 122.44(i)(2) effluent monitoring is required for all constituents with effluent limitations. Effluent monitoring is necessary to assess compliance with effluent limitations, assess the effectiveness of the treatment process, and to assess the impacts of the discharge on the receiving stream and groundwater.

2. Effluent monitoring frequencies and sample types for flow (continuous), pH (daily), hardness (monthly), temperature (daily), and total dissolved solids (monthly) have been retained from Order R5-2010-0005 to determine compliance with effluent limitations, where applicable, and characterize the effluent for these parameters.

3. Monitoring data collected over the previous permit term for aluminum, cadmium, delta-BHC, endrin aldehyde, iron, lead, manganese, and zinc did not demonstrate reasonable potential to exceed water quality objectives/criteria. Thus, specific monitoring requirements for these parameters have not been retained from Order R5-2010-0005.

4. Order R5-2010-0005 included effluent limitations for chlorine residual and required continuous monitoring for chlorine residual when in use. As discussed in section II.A of this Fact Sheet, the Discharger implements operational protocols during maintenance cleaning of the membranes to ensure that discharges of chlorine residual to Orchard Creek do not occur. Therefore, this Order discontinues effluent monitoring requirements for chlorine residual.

5. This Order reduces the monitoring frequency for ammonia, BOD_5, and TSS from daily to weekly, consistent with monitoring frequencies required in other similar facilities. The Central Valley Water Board finds that this frequency is sufficient to characterize the effluent.

6. This Order reduces the monitoring frequency for mercury from monthly to quarterly. The Central Valley Water Board finds that this frequency is sufficient to characterize the effluent.

7. This Order reduces the monitoring frequency for electrical conductivity from three times per week to weekly. Electrical conductivity in the effluent did not exhibit reasonable potential to exceed water quality objectives/criteria. The Central Valley Water Board finds that this frequency is sufficient to characterize the effluent.

8. This Order reduces monitoring frequency for total coliform organisms from daily to three times per week. The Central Valley Water Board finds that this frequency is sufficient to characterize the effluent.

9. This Order establishes monitoring for nitrate and nitrite in order to characterize the effluent and determine compliance with the applicable effluent limitations.

10. In accordance with Section 1.3 of the SIP, periodic monitoring for priority pollutants for which criteria or objectives apply and for which no effluent limitations have been established is required. This Order requires monitoring quarterly during the third year of the permit term in order to collect data to conduct an RPA for the next permit renewal. See section IX.D of the MRP for more detailed requirements related to performing priority pollutant monitoring.

11. Water Code section 13176, subdivision (a), states: "*The analysis of any material required by [Water Code sections 13000-16104] shall be performed by a laboratory that has accreditation or certification pursuant to Article 3 (commencing with Section 100825) of Chapter 4 of Part 1 of Division 101 of the Health and Safety Code.*" The DDW certifies laboratories through its Environmental Laboratory Accreditation Program (ELAP).

    Section 13176 cannot be interpreted in a manner that would violate federal holding time requirements that apply to NPDES permits pursuant to the CWA. (Wat. Code §§ 13370, subd. (c), 13372, 13377.) Section 13176 is inapplicable to NPDES permits to the extent it is inconsistent with CWA requirements. (Wat. Code § 13372, subd. (a).) The holding time requirements are 15 minutes for chlorine residual, dissolved oxygen, and pH, and immediate analysis is required for temperature. (40 C.F.R. § 136.3(e), Table II) Due to

the location of the Facility, it is both legally and factually impossible for the Discharger to comply with section 13176 for constituents with short holding times.

C. Whole Effluent Toxicity Testing Requirements

1. **Acute Toxicity.** Based on acute toxicity testing conducted during the term of Order R5-2010-0005, the discharge has been in compliance with the effluent limitations for acute toxicity. Therefore, this Order reduces the frequency for 96-hour bioassay testing from quarterly to annually.

2. **Chronic Toxicity.** Consistent with Order R5-2010-0005, quarterly chronic whole effluent toxicity testing is required in order to demonstrate compliance with the Basin Plan's narrative toxicity objective.

D. Receiving Water Monitoring

1. Surface Water

a. **Delta Regional Monitoring Program.** The Central Valley Water Board requires individual dischargers and discharger groups to conduct monitoring of Delta waters and Delta tributary waters in the vicinity of their discharge, known as ambient (or receiving) water quality monitoring. This monitoring provides information on the impacts of waste discharges on Delta waters, and on the extant condition of the Delta waters. However, the equivalent funds spent on current monitoring efforts could be used more efficiently and productively, and provide a better understanding of geographic and temporal distributions of contaminants and physical conditions in the Delta, and of other Delta water quality issues, if those funds were used for a coordinated ambient monitoring effort, rather than continue to be used in individual, uncoordinated ambient water quality monitoring programs. The Delta Regional Monitoring Program will provide data to better inform management and policy decisions regarding the Delta.

This Order allows the Discharger to elect to participate in the Delta Regional Monitoring Program in lieu of conducting all or part of the individual receiving water monitoring required in the Monitoring and Reporting Program. If the Discharger elects to cease individual receiving water monitoring and participate in the Delta Regional Monitoring Program, the Discharger shall submit a letter signed by an authorized representative to the Executive Officer informing the Central Valley Water Board that the Discharger will participate in the Delta Regional Monitoring Program and the date on which individual receiving water monitoring under Attachment E, Sections VIII.A.1 and VIII.A.2, will cease or be modified. Approval by the Executive Officer is required, and contingent on Delta Regional Monitoring Program Steering Committee action on the forthcoming Regional Monitoring Program monitoring plan.

Delta Regional Monitoring Program data is not intended to be used directly to represent either upstream or downstream water quality for purposes of determining compliance with this Permit. Delta Regional Monitoring Program monitoring stations are established generally as "integrator sites" to evaluate the combined impacts on water quality of multiple discharges into the Delta; Delta Regional Monitoring Program monitoring stations would not normally be able to identify the source of any specific constituent, but would be used to identify water quality issues needing further evaluation. Delta Regional Monitoring Program monitoring data may be used to help establish background receiving water quality for an RPA in an NPDES permit after evaluation of the applicability of the data for that purpose. In general, monitoring data from samples collected in the immediate vicinity of the discharge

will be given greater weight in permitting decisions than receiving water monitoring data collected at greater distances from the discharge point. Delta Regional Monitoring Program data, as with all environmental monitoring data, can provide an assessment of water quality at a specific place and time that can be used in conjunction with other information, such as other receiving water monitoring data, spatial and temporal distribution and trends of receiving water data, effluent data from the Discharger's discharge and other point and non-point source discharges, receiving water flow volume, speed and direction, and other information to determine the likely source or sources of a constituent that resulted in exceedance of a receiving water quality objective.

If the Discharger begins to participate in the Delta Regional Monitoring Program in lieu of individual receiving water monitoring, the Discharger shall continue to participate in the Delta Regional Monitoring Program until such time as the Discharger informs the Board that participation in the Delta Regional Monitoring Program will cease and individual monitoring is reinstituted. Receiving water monitoring under Attachment E, Sections VIII.A.1 and VIII.A.2, is not required under this Order so long as the Discharger adequately supports the Delta Regional Monitoring Program. Participation in the Delta Regional Monitoring Program by a Discharger shall consist of providing funds and/or in-kind services to the Delta Regional Monitoring Program at least equivalent to discontinued individual monitoring and study efforts. If a discharger or discharger group fails to maintain adequate participation in the Delta Regional Monitoring Program, as determined through criteria to be developed by the Delta Regional Monitoring Program Steering Committee, the Steering Committee will recommend to the Central Valley Water Board that an individual monitoring program be reinstated for that discharger or discharger group.

If the Discharger is participating in the Delta Regional Monitoring Program as described in Attachment E, Section VIII, the receiving water portion of the required Characterization Monitoring need not be conducted by the Discharger. Instead, data from the Delta Regional Monitoring Program will be utilized to characterize the receiving water in the permit renewal. The Discharger may, however, conduct any site-specific receiving water monitoring deemed appropriate by the Discharger and submit that monitoring data with this Characterization Monitoring. In general, monitoring data from samples collected in the immediate vicinity of the discharge will be given greater weight in permitting decisions than receiving water monitoring data collected at greater distances from the discharge point. Historic receiving water monitoring data taken by the Discharger and from other sources may also be evaluated to determine whether or not that data is representative of current receiving water conditions. If found to be representative of current conditions, then that historic data may be used in characterizing receiving water quality for the purposes of Reasonable Potential analysis.

b. Receiving water monitoring is necessary to assess compliance with receiving water limitations and to assess the impacts of the discharge on the receiving stream.

c. Receiving water monitoring requirements at Monitoring Locations RSW-001 and RSW-002 have been retained for ammonia (quarterly), dissolved oxygen (weekly), electrical conductivity (weekly), hardness (monthly), temperature (weekly), turbidity (weekly), and pH (weekly).

d. Order R5-2010-0005 required receiving water monitoring for fecal coliform organisms at Monitoring Locations RSW-001 and RSW-002. This Order includes

effluent limitations for total coliform organisms which are more stringent than the receiving water limitations for fecal coliform organisms. Compliance with the effluent limitations for total coliform organisms is expected to be protective of the receiving water limitation for fecal coliform organisms. Therefore, this Order discontinues receiving water monitoring for fecal coliform organisms.

e. In accordance with Section 1.3 of the SIP, periodic monitoring for priority pollutants for which criteria or objectives apply and for which no effluent limitations have been established. This Order requires monitoring for priority pollutants and other pollutants of concern quarterly during the third year of the permit term in the upstream receiving water, concurrent with effluent monitoring, in order to collect data to conduct an RPA for the next permit renewal. See section IX.D of the Monitoring and Reporting Program (Attachment E) for more detailed requirements related to performing priority pollutant monitoring.

2. Groundwater – Not Applicable

E. Other Monitoring Requirements

1. **Biosolids Monitoring**

Biosolids monitoring is required to ensure compliance with the biosolids disposal requirements contained in the Special Provision contained in section VI.C.5.a. of this Order. Biosolids disposal requirements are imposed pursuant to 40 C.F.R. part 503 to protect public health and prevent groundwater degradation.

2. **Water Supply Monitoring**

Water supply monitoring is required to evaluate the source of constituents in the wastewater. Consistent with Order R5-2010-0005, this Order requires quarterly monitoring for electrical conductivity and total dissolved solids.

Quarterly monitoring requirements for hardness have been established in this Order. The Discharger began blending higher hardness water from an on-site well to increase the water supply hardness and reduce distribution system corrosion that was occurring due to the extreme low hardness of the source water.

3. **Filtration System and UV Disinfection System Monitoring**

UV system monitoring and reporting are required to ensure that the UV system is operated to adequately inactivate pathogens in the wastewater. UV disinfection system monitoring is imposed to achieve equivalency to requirements established by the DDW and the NWRI Guidelines.

Order R5-2010-0005 required monitoring for turbidity at Monitoring Location UVS-001. This Order moves the point of compliance to Monitoring Location FIL-001.

As described in section II.A of this Fact Sheet, treated wastewater may either be discharged to Orchard Creek or directed to a recycled water storage tank where it may be used on-site for landscape irrigation. Furthermore, the Discharger directs flow from the UV disinfection system to the recycled water storage tank during maintenance cleaning of the membranes and when turbidity levels exceed 0.18 NTU. This Order only requires the Discharger to monitor and report results from Monitoring Locations UVS-001, UVS-002, and FIL-001 during periods of discharge to Orchard Creek.

VIII. PUBLIC PARTICIPATION

The Central Valley Water Board has considered the issuance of WDR's that will serve as an NPDES permit for Thunder Valley Casino Wastewater Treatment Plant. As a step in the WDR adoption process, the Central Valley Water Board staff has developed tentative WDR's and has encouraged public participation in the WDR adoption process.

A. Notification of Interested Parties

The Central Valley Water Board notified the Discharger and interested agencies and persons of its intent to prescribe WDR's for the discharge and provided an opportunity to submit written comments and recommendations. Notification was provided through the following posting a Notice of Public Hearing at the Lincoln City Hall, the Placer County Superior Courthouse, and at the Facility. The Notice and tentative order were also posted on the Central Valley Water Board's website.

The public had access to the agenda and any changes in dates and locations through the Central Valley Water Board's website at:
http://www.waterboards.ca.gov/centralvalley/board_info/meetings/

B. Written Comments

Interested persons were invited to submit written comments concerning tentative WDR's as provided through the notification process. Comments were due either in person or by mail to the Executive Office at the Central Valley Water Board at the address on the cover page of this Order.

To be fully responded to by staff and considered by the Central Valley Water Board, the written comments were due at the Central Valley Water Board office by 5:00 p.m. on **4 May 2015**.

C. Public Hearing

The Central Valley Water Board held a public hearing on the tentative WDR's during its regular Board meeting on the following date and time and at the following location:

Date:	4/5 June 2015
Time:	8:30 a.m.
Location:	Regional Water Quality Control Board, Central Valley Region 11020 Sun Center Dr., Suite #200 Rancho Cordova, CA 95670

Interested persons were invited to attend. At the public hearing, the Central Valley Water Board heard testimony pertinent to the discharge, WDR's, and permit. For accuracy of the record, important testimony was requested in writing.

D. Reconsideration of Waste Discharge Requirements

Any aggrieved person may petition the State Water Board to review the decision of the Central Valley Water Board regarding the final WDR's. The petition must be received by the State Water Board at the following address within 30 calendar days of the Central Valley Water Board's action:

State Water Resources Control Board
Office of Chief Counsel
P.O. Box 100, 1001 I Street
Sacramento, CA 95812-0100

For instructions on how to file a petition for review, see
http://www.waterboards.ca.gov/public_notices/petitions/water_quality/wqpetition_instr.shtml

E. Information and Copying

The Report of Waste Discharge, other supporting documents, and comments received are on file and may be inspected at the address above at any time between 8:30 a.m. and 4:45 p.m., Monday through Friday. Copying of documents may be arranged through the Central Valley Water Board by calling (916) 464-3291.

F. Register of Interested Persons

Any person interested in being placed on the mailing list for information regarding the WDR's and NPDES permit should contact the Central Valley Water Board, reference this facility, and provide a name, address, and phone number.

G. Additional Information

Requests for additional information or questions regarding this order should be directed to Xuan Luo at (916) 464-4606.

ATTACHMENT G – SUMMARY OF REASONABLE POTENTIAL ANALYSIS

Constituent	Units	MEC	B	C	CMC	CCC	Water & Org	Org. Only	Basin Plan	MCL	Reasonable Potential
Aluminum, Total Recoverable	µg/L	58	640	87	750[1]	87[2]	--	--	--	200	No[4]
Ammonia Nitrogen, Total (as N)	mg/L	<0.1	0.22	1.55	2.14[3]	1.55[4]	--	--	--	--	No
Cadmium, Total Recoverable	µg/L	0.1	0.87	1	1.3	1	--	--	--	5	No
Copper, Total Recoverable	µg/L	7.8	2.9	88	120	88	1,300	--	--	1,000	No
Cyanide, Total (as CN)	µg/L	ND	ND	5.2	22	5.2	700	220,000	--	150	No[4]
Delta-BHC	µg/L	ND	--	ND	--	--	--	--	ND	--	No
Endrin aldehyde	µg/L	ND	--	ND	--	--	0.76	0.81	ND	--	No
Electrical Conductivity @ 25°C	µmhos/cm	621[1]	202[1]	900	--	--	--	--	--	900	No
Iron, Total Recoverable	µg/L	48[1]	635[1]	300	--	1,000	--	--	--	300	No
Lead, Total Recoverable	µg/L	0.2	0.53	0.78	20	0.78	--	--	--	15	No
Manganese, Total Recoverable	µg/L	18[1]	105[1]	50	--	--	--	100	--	50	No
Mercury, Total Recoverable	µg/L	0.0015	0.004	0.05	--	--	0.050	0.051	--	2	No
Nitrate, Total (as N)	mg/L	3.5	0.41	10	--	--	10	--	--	10	No
Nitrite, Total (as N)	mg/L	0.23	0.012	1	--	--	--	--	--	1	No
Zinc, Total Recoverable	µg/L	33	5	47	47	47	7,400	26,000	--	5,000	No[4]

General Note: All inorganic concentrations are given as a total recoverable.
MEC = Maximum Effluent Concentration
B = Maximum Receiving Water Concentration or lowest detection level, if non-detect
C = Criterion used for Reasonable Potential Analysis
CMC = Criterion Maximum Concentration (CTR or NTR)
CCC = Criterion Continuous Concentration (CTR or NTR)
Water & Org = Human Health Criterion for Consumption of Water & Organisms (CTR or NTR)
Org. Only = Human Health Criterion for Consumption of Organisms Only (CTR or NTR)
Basin Plan = Numeric Site-specific Basin Plan Water Quality Objective
MCL = Drinking Water Standards Maximum Contaminant Level
NA = Not Available
ND = Non-detect

Footnotes:
(1) U.S. EPA National Recommended Ambient Water Quality Criteria, Freshwater Aquatic Life Protection, 4-day average.
(2) U.S. EPA National Recommended Ambient Water Quality Criteria, Freshwater Aquatic Life Protection, 1-hour average.
(3) U.S. EPA National Recommended Ambient Water Quality Criteria, Freshwater Aquatic Life Protection, 30-day average.
(4) See discussion in Fact Sheet section IV.C.3.
(5) Represents the maximum observed average annual concentration for comparison with the Secondary MCL.

ATTACHMENT H – CALCULATION OF WQBEL'S

Human Health WQBEL's Calculations									
Parameter	**Units**	**Criteria**	**Mean Background Concentration**	**Dilution Factor**	**MDEL/AMEL Multiplier**	**AMEL Multiplier**	**AMEL**	**MDEL**	**AWEL**
Nitrate plus Nitrite, Total (as N)	mg/L	10	0.41[1]	0	2.01	1.55	10	--	20

[1] Maximum background concentration.

Aquatic Life WQBEL's Calculations															
Parameter	**Units**	**Criteria**		**Dilution Factors**		**Aquatic Life Calculations**							**Final Effluent Limitations**		
		CMC	**CCC**	**CMC**	**CCC**	**ECA Multiplier$_{acute}$**	**LTA$_{acute}$**	**ECA Multiplier$_{chronic}$**	**LTA$_{chronic}$**	**AMEL Multiplier$_{95}$**	**AWEL Multiplier**	**MDEL Multiplier$_{99}$**	**AMEL[1]**	**AWEL[2]**	**MDEL[3]**
Ammonia Nitrogen, Total (as N)	mg/L	2.14	1.55	--	--	0.32	0.69	0.78	1.2	1.55	2.68	--	1.1	1.8	--

[1] Average Monthly Effluent Limitations are calculated according to Section 1.4 of the SIP using a 95th percentile occurrence probability.
[2] Average Weekly Effluent Limitations are calculated according to Section 1.4 of the SIP using a 98th percentile occurrence probability.
[3] Maximum Daily Effluent Limitations are calculated according to Section 1.4 of the SIP using a 99th percentile occurrence probability.