CALIFORNIA REGIONAL WATER QUALITY CONTROL BOARD

CENTRAL VALLEY REGION

11020 Sun Center Drive, #200 Rancho Cordova, California 95670-6114
Phone (916) 464-3291 • Fax (916) 464-4645
http://www.waterboards.ca.gov/centralvalley

ORDER R5-2012-XXXX
NPDES NO. CA0079154

WASTE DISCHARGE REQUIREMENTS FOR THE CITY OF TRACY TRACY WASTEWATER TREATMENT PLANT SAN JOAQUIN COUNTY

The following Discharger is subject to waste discharge requirements as set forth in this Order:

Table 1. Discharger Information

Discharger	**City of Tracy**
Name of Facility	**Tracy Wastewater Treatment Plant**
Facility Address	**3900 Holly Drive**
	Tracy, CA 95304
	San Joaquin County
The U.S. Environmental Protection Agency (USEPA) and the Regional Water Quality Control Board have classified this discharge as a **major** discharge.	

The discharge by the City of Tracy from the discharge points identified below is subject to waste discharge requirements as set forth in this Order:

Table 2. Discharge Location

Discharge Point	Effluent Description	Discharge Point Latitude	Discharge Point Longitude	Receiving Water
001	Treated Wastewater	37º 48’ 19” N	121º 24’ 07” W	Old River
002*	Treated Wastewater	37º 48’ 20” N	121º 24’ 15” W	Old River

*Future outfall proposed as part of Facility expansion, anticipated 2015.

Table 3. Administrative Information

This Order was adopted by the Regional Water Quality Control Board on:	**7 December 2012**
This Order shall become effective on:	**26 January 2013**
This Order shall expire on:	**1 December 2017**
The Discharger shall file a Report of Waste Discharge in accordance with title 23, California Code of Regulations, as application for issuance of new waste discharge requirements no later than:	**3 June 2017**

I, **PAMELA C. CREEDON**, Executive Officer, do hereby certify that this Order with all attachments is a full, true, and correct copy of an Order adopted by the California Regional Water Quality Control Board, Central Valley Region, on **7 December 2012**.

_____
PAMELA C. CREEDON, Executive Officer

Table of Contents

I. Facility Information 3
II. Findings 3
III. Discharge Prohibitions 12
IV. Effluent Limitations and Discharge Specifications 12
A. Effluent Limitations – Discharge Point No. 001 and Discharge Point No. 002 12
B. Land Discharge Specifications – Set forth in WDR Order No. R5-2007-0038 15
C. Reclamation Specifications – Not Applicable 15
V. Receiving Water Limitations 15
A. Surface Water Limitations 15
B. Groundwater Limitations (Set forth in WDR Order No. R5-2007-0038) 17
VI. Provisions 17
A. Standard Provisions 17
B. Monitoring and Reporting Program Requirements 22
C. Special Provisions 22
1. Reopener Provisions 22
2. Special Studies, Technical Reports and Additional Monitoring Requirements 23
3. Best Management Practices and Pollution Prevention 25
4. Construction, Operation and Maintenance Specifications 27
5. Special Provisions for Municipal Facilities (POTWs Only) 27
6. Other Special Provisions 29
7. Compliance Schedules 31
VII. Compliance Determination 32

List of Tables

Table 1. Discharger Information 1
Table 2. Discharge Location 1
Table 3. Administrative Information 1
Table 4. Facility Information 3
Table 5. Basin Plan Beneficial Uses 6
Table 6. Effluent Limitations 12

List of Attachments

Attachment A – Definitions A-1
Attachment B – Map B-1
Attachment C – Flow Schematic B-1
Attachment D – Standard Provisions D-1
Attachment E – Monitoring and Reporting Program E-1
Attachment F – Fact Sheet F-1
Attachment G – Summary of Reasonable Potential Analysis G-1
Attachment H – Calculation of WQBELs H-1
Attachment I – Effluent and Receiving Water Characterization Study I-1
Attachment J – Dioxin and Furan Sampling J-1

I. FACILITY INFORMATION

The following Discharger is subject to waste discharge requirements as set forth in this Order:

Table 4. Facility Information

Discharger	**City of Tracy**
Name of Facility	**Tracy Wastewater Treatment Plant**
Facility Address	**3900 Holly Drive**
	Tracy, CA 95304
	San Joaquin County
Facility Contact, Title, and Phone	**Mr. Steve Bayley, Deputy Director of Public Works (209) 831-4434**
Mailing Address	**SAME**
Type of Facility	**Publicly Owned Treatment Works**
Facility Design Flow	**10.8 million gallons per day (mgd) (with expansion to 16 mgd)**

II. FINDINGS

The California Regional Water Quality Control Board, Central Valley Region (hereinafter Central Valley Water Board), finds:

A. Background. The City of Tracy (hereinafter Discharger) was authorized to discharge pursuant to Order R5-2007-0036-01 and National Pollutant Discharge Elimination System (NPDES) Permit No. CA0079154. The Discharger submitted a Report of Waste Discharge (ROWD), dated 3 November 2011, and applied for a NPDES permit renewal to discharge up to 16 million gallons per day (mgd) of tertiary treated wastewater from the Tracy Wastewater Treatment Plant (hereinafter Facility) to the Old River, within the Sacramento- San Joaquin Delta, a water of the United States. On 17 November 2011, the Discharger was notified their application was incomplete and a letter was sent requesting supplemental information. Subsequently, on 5 March 2012, the City of Tracy submitted a modified ROWD and the application was deemed complete.

For the purposes of this Order, references to the “discharger” or “permittee” in applicable federal and state laws, regulations, plans, or policy are held to be equivalent to references to the Discharger herein.

B. Facility Description. The Discharger owns and operates a wastewater collection, treatment, and disposal system. The treatment system consists of a main treatment facility and an industrial pretreatment facility. The main treatment facility consists of raw influent bar screening, primary sedimentation, flow equalization, biological nutrient removal, secondary sedimentation, tertiary filtration, chlorination, dechlorination, and post aeration. Biosolids are thickened by dissolved air flotation, anaerobically digested, and dewatered in impermeable drying beds. The dried biosolids are hauled off-site for land application or for disposal in a landfill. The industrial pretreatment facility consists of four unlined industrial ponds. In addition, Leprino Foods Company (Leprino), a local cheese manufacturer, leases two aerated lagoons and one unlined

oxidation pond from the Discharger for pretreatment of its industrial food processing wastewater. Per an industrial pretreatment permit, the Discharger accepts pretreated industrial food processing wastewater from Leprino. The industrial wastewater and other process water from the main facility are stored in the unlined industrial ponds and returned to the primary sedimentation basins of the main facility. Wastewater is discharged from Discharge Point No. 001 (see table on cover page) to Old River, a water of the United States and part of the Sacramento-San Joaquin Delta (Delta). Attachment B (Figure B-1) provides a topographic map describing the location of the Facility. Attachment C (Figures C-1 and C-2) provide wastewater flow schematics for the Facility.

This Order only regulates the surface water discharge to Old River. Separate Waste Discharge Requirements (WDR) Order R5-2007-0038 regulates discharges to land at the Facility.

The Discharger is upgrading the Facility to improve treatment and expand capacity. The treatment system capacity will be expanded to 16 mgd through a four-phase expansion. Phase 1 was completed in August 2008, which increased the treatment capacity from 9 mgd to 10.8 mgd and included nitrification, denitrification and tertiary filtration. The proposed Phase 2 improvements will be completed during the term of this Order and will include construction of a second outfall near the existing outfall and paving of additional sludge drying beds. A detailed description of the planned changes are discussed in Attachment F, Section II.E.

C. **Legal Authorities.** This Order is issued pursuant to section 402 of the Clean Water Act (CWA) and implementing regulations adopted by USEPA and chapter 5.5, division 7 of the California Water Code (Water Code; commencing with section 13370). It shall serve as a NPDES permit for point source discharges from this facility to surface waters. This Order also serves as Waste Discharge Requirements (WDRs) pursuant to article 4, chapter 4, division 7 of the Water Code (commencing with section 13260).

D. **Background and Rationale for Requirements.** The Central Valley Water Board developed the requirements in this Order based on information submitted as part of the application, through monitoring and reporting programs, and other available information. The Fact Sheet (Attachment F), which contains background information and rationale for Order requirements, is hereby incorporated into this Order and constitutes part of the Findings for this Order. Attachments A through E and G through J are also incorporated into this Order.

E. **California Environmental Quality Act (CEQA).** Under Water Code section 13389, this action to adopt an NPDES permit is exempt from the provisions of CEQA, Public Resources Code sections 21100-21177.

F. **Technology-based Effluent Limitations.** Section 301(b) of the CWA and implementing USEPA permit regulations at section 122.44, title 40 of the Code of Federal Regulations (40 CFR 122.44), require that permits include conditions meeting applicable technology-based requirements at a minimum, and any more stringent effluent limitations necessary to meet applicable water quality standards. The

discharge authorized by this Order must meet minimum federal technology-based requirements based on Secondary Treatment Standards at 40 CFR Part 133. A detailed discussion of the technology-based effluent limitations development is included in the Fact Sheet.

G. Water Quality-based Effluent Limitations (WQBELs). Section 301(b) of the CWA and 40 CFR 122.44(d) require that permits include limitations more stringent than applicable federal technology-based requirements where necessary to achieve applicable water quality standards. This Order contains requirements, expressed as technology equivalence requirements, which are necessary to achieve water quality standards. The Central Valley Water Board has considered the factors listed in Water Code section 13241 in establishing these requirements. The rationale for these requirements, which consist of tertiary treatment or equivalent requirements, is discussed in the Fact Sheet.

40 CFR 122.44(d)(1)(i) mandates that permits include effluent limitations for all pollutants that are or may be discharged at levels that have the reasonable potential to cause or contribute to an exceedance of a water quality standard, including numeric and narrative objectives within a standard. Where reasonable potential has been established for a pollutant, but there is no numeric criterion or objective for the pollutant, WQBELs must be established using: (1) USEPA criteria guidance under CWA section 304(a), supplemented where necessary by other relevant information; (2) an indicator parameter for the pollutant of concern; or (3) a calculated numeric water quality criterion, such as a proposed state criterion or policy interpreting the state's narrative criterion, supplemented with other relevant information, as provided in 40 CFR 122.44(d)(1)(vi).

H. Water Quality Control Plans. The Central Valley Water Board adopted a *Water Quality Control Plan*, *Fourth Edition (Revised October 2011),* for the Sacramento and San Joaquin River Basins (hereinafter Basin Plan) that designates beneficial uses in Section II, establishes water quality objectives, and contains implementation programs and policies to achieve those objectives for all waters addressed through the plan. Table II-1 of the Basin Plan identifies the beneficial uses of certain specific water bodies. The Old River is listed in Table II-1. In addition, the Basin Plan implements State Water Resources Control Board (State Water Board) Resolution No. 88-63, which established state policy that all waters, with certain exceptions, should be considered suitable or potentially suitable for municipal or domestic supply. Beneficial uses applicable to Old River are as follows:

Table 5. Basin Plan Beneficial Uses

Discharge Point	Receiving Water Name	Beneficial Use(s)
001	Old River	Existing uses from Table II-1 of the Basin Plan: Municipal and domestic supply (MUN); agricultural supply and stock watering (AGR); industrial process water supply (PROC), industrial service supply (IND); water contact recreation (REC-1); other non-contact water recreation (REC-2); warm freshwater aquatic habitat (WARM); cold freshwater aquatic habitat (COLD); warm and cold fish migration habitat (MIGR); warm spawning habitat (SPAWN); wildlife habitat (WILD); commercial and sportfishing (COMM) and navigation (NAV). Potential uses from Table II-1 of the Basin Plan: None Intermittent uses from Section II of the Basin Plan: None Suitable uses from State Water Board Resolution No. 88-63: Municipal and domestic supply (MUN).
002*	Old River	Existing uses from Table II-1 of the Basin Plan: Municipal and domestic supply (MUN); agricultural supply and stock watering (AGR); industrial process water supply (PROC), industrial service supply (IND); water contact recreation (REC-1); other non-contact water recreation (REC-2); warm freshwater aquatic habitat (WARM); cold freshwater aquatic habitat (COLD); warm and cold fish migration habitat (MIGR); warm spawning habitat (SPAWN); wildlife habitat (WILD); commercial and sportfishing (COMM) and navigation (NAV). Potential uses from Table II-1 of the Basin Plan: None Intermittent uses from Section II of the Basin Plan: None Suitable uses from State Water Board Resolution No. 88-63: Municipal and domestic supply (MUN).

*Future outfall proposed for Facility expansion, expected 2015.

The Basin Plan includes a list of Water Quality Limited Segments (WQLSs), which are defined as "…*those sections of lakes, streams, rivers or other fresh water bodies where water quality does not meet (or is not expected to meet) water quality standards even after the application of appropriate limitations for point sources (40 CFR 130, et seq.)*." The Basin Plan also states, "*Additional treatment beyond minimum federal standards will be imposed on dischargers to WQLSs. Dischargers will be assigned or allocated a maximum allowable load of critical pollutants so that water quality objectives can be met in the segment*." The listing for the western portion

Sacramento-San Joaquin Delta waterways includes: diazinon and chlorpyrifos, organo-chlorine Group A pesticides, DDT, mercury, electrical conductivity, and unknown toxicity. The listing for Old River between the San Joaquin River and the Delta-Mendota Canal also includes dissolved oxygen deficiencies. Effluent limitations for these constituents are included in this Order.

The *Water Quality Control Plan for the San Francisco Bay/Sacramento-San Joaquin Delta Estuary* (Bay-Delta Plan) was adopted in December 2006 by the State Water Board superseding the 1995 Bay-Delta Plan. The State Water Board is in the process of a phased review and update of the Bay-Delta Plan. The Bay-Delta Plan identifies the beneficial uses of the estuary and includes objectives for flow, salinity, and endangered species protection.

The State Water Board adopted Decision 1641 (D-1641) on 29 December 1999, and revised on 15 March 2000. D-1641 implements flow objectives for the Bay-Delta Estuary, approves a petition to change points of diversion of the Central Valley Project and the State Water Project in the Southern Delta, and approves a petition to change places of use and purposes of use of the Central Valley Project. The water quality objectives of the Bay-Delta Plan are implemented as part of this Order.

The Bay-Delta Plan includes water quality objectives for Electrical Conductivity (EC) for the South Delta in the vicinity of the discharge[1]. On 1 June 2011, the Superior Court for Sacramento County entered a judgment and peremptory writ of mandate in the matter of *City of Tracy v. State Water Resources Control Board* (Case No; 34-2009-8000-392-CU-WM-GDS), ruling that the South Delta salinity objectives shall not apply to the City of Tracy and other municipal dischargers in the South Delta area pending reconsideration of the South Delta salinity objectives under Wat. Code §13241 and adoption of a proper program of implementation under Wat. Code §13242 that includes municipal dischargers. The State Water Board is currently considering new salinity and flow objectives in the South Delta that will address the Court Order. Therefore, at the time this Order was adopted the South Delta salinity objectives were not applicable to the Discharger.

Requirements of this Order specifically implement the applicable Water Quality Control Plans.

I. **National Toxics Rule (NTR) and California Toxics Rule (CTR).** USEPA adopted the NTR on 22 December 1992, and later amended it on 4 May 1995 and 9 November 1999. About 40 criteria in the NTR applied in California. On 18 May 2000, USEPA adopted the CTR. The CTR promulgated new toxics criteria for California and, in addition, incorporated the previously adopted NTR criteria that were applicable in the state. The CTR was amended on 13 February 2001. These rules contain water quality criteria for priority pollutants.

[1] The Bay-Delta Plan includes water quality objectives at three locations in the South Delta for EC. The water quality objectives are a 14-day running average EC of 700 µmhos/cm from 1 April – 31 Aug and a 14-day running average EC of 1000 µmhos/cm from 1 September - 31 March.

J. State Implementation Policy. On 2 March 2000, the State Water Board adopted the *Policy for Implementation of Toxics Standards for Inland Surface Waters, Enclosed Bays, and Estuaries of California* (State Implementation Policy or SIP). The SIP became effective on 28 April 2000 with respect to the priority pollutant criteria promulgated for California by USEPA through the NTR and to the priority pollutant objectives established by the Central Valley Water Board in the Basin Plan. The SIP became effective on 18 May 2000 with respect to the priority pollutant criteria promulgated by USEPA through the CTR. The State Water Board adopted amendments to the SIP on 24 February 2005 that became effective on 13 July 2005. The SIP establishes implementation provisions for priority pollutant criteria and objectives and provisions for chronic toxicity control. Requirements of this Order implement the SIP.

K. Compliance Schedules and Interim Requirements. In general, an NPDES permit must include final effluent limitations that are consistent with CWA section 301 and with 40 CFR 122.44(d). There are exceptions to this general rule. The State Water Board's *Policy for Compliance Schedules in National Pollutant Discharge Elimination System Permits* (Compliance Schedule Policy) allows compliance schedules for new, revised, or newly interpreted water quality objectives or criteria, or in accordance with a TMDL. All compliance schedules must be as short as possible, and may not exceed ten years from the effective date of the adoption, revision, or new interpretation of the applicable water quality objective or criterion, unless a TMDL allows a longer schedule. The Central Valley Water Board, however, is not required to include a compliance schedule, but may issue a Time Schedule Order pursuant to Water Code section 13300 or a Cease and Desist Order pursuant to Water Code section 13301 where it finds that the discharger is violating or threatening to violate the permit. The Central Valley Water Board will consider the merits of each case in determining whether it is appropriate to include a compliance schedule in a permit, and, consistent with the Compliance Schedule Policy, should consider feasibility of achieving compliance, and must impose a schedule that is as short as possible to achieve compliance with the effluent limit based on the objective or criteria.

Where a compliance schedule for a final effluent limitation exceeds one year, the Order must include interim numeric limitations for that constituent or parameter, interim milestones and compliance reporting within 14 days after each interim milestone. The permit may also include interim requirements to control the pollutant, such as pollutant minimization and source control measures. This Order does include compliance schedules and interim effluent limitations. A detailed discussion of the basis for the compliance schedules and interim effluent limitation(s) is included in the Fact Sheet.

L. Alaska Rule. On 30 March 2000, USEPA revised its regulation that specifies when new and revised state and tribal water quality standards become effective for CWA purposes. (40 CFR 131.21 and 65 FR 24641 (27 April 2000).) Under the revised regulation (also known as the Alaska rule), new and revised standards submitted to USEPA after 30 May 2000, must be approved by USEPA before being used for CWA purposes. The final rule also provides that standards already in effect and submitted

to USEPA by 30 May 2000 may be used for CWA purposes, whether or not approved by USEPA.

M. Stringency of Requirements for Individual Pollutants. This Order contains both technology-based effluent limitations and WQBELs for individual pollutants. The technology-based effluent limitations consist of restrictions on pH, biochemical oxygen demand (BOD), total suspended solids (TSS), and flow . The WQBELs consist of restrictions on ammonia (total as N), bis(2-ethylhexyl) phthalate, copper (total recoverable), chlorodibromomethane, dichlorobromomethane, BOD, TSS, pH, lead (total recoverable), nitrate plus nitrite (total as N), temperature, total residual chlorine, methylmercury, chlorpyrifos, diazinon, acute whole effluent toxicity, and chronic whole effluent toxicity. This Order's technology-based pollutant restrictions implement the minimum, applicable federal technology-based requirements.

WQBELs have been scientifically derived to implement water quality objectives that protect beneficial uses. Both the beneficial uses and the water quality objectives have been approved pursuant to federal law and are the applicable federal water quality standards. To the extent that toxic pollutant WQBELs were derived from the CTR, the CTR is the applicable standard pursuant to 40 CFR 131.38. The scientific procedures for calculating the individual WQBELs for priority pollutants are based on the CTR-SIP, which was approved by USEPA on 18 May 2000. All beneficial uses and water quality objectives contained in the Basin Plan were approved under state law and submitted to and approved by USEPA prior to 30 May 2000. Any water quality objectives and beneficial uses submitted to USEPA prior to 30 May 2000, but not approved by USEPA before that date, are nonetheless "*applicable water quality standards for purposes of the [Clean Water] Act*" pursuant to 40 CFR 131.21(c)(1). Collectively, this Order's restrictions on individual pollutants are no more stringent than required to implement the technology-based requirements of the CWA and the applicable water quality standards for purposes of the CWA.

N. Antidegradation Policy. 40 CFR 131.12 requires that the state water quality standards include an antidegradation policy consistent with the federal policy. The State Water Board established California's antidegradation policy in State Water Board Resolution No. 68-16. Resolution No. 68-16 incorporates the federal antidegradation policy where the federal policy applies under federal law. Resolution No. 68-16 requires that existing quality of waters be maintained unless degradation is justified based on specific findings. The Central Valley Water Board's Basin Plan implements, and incorporates by reference, both the state and federal antidegradation policies. As discussed in detail in the Fact Sheet, the permitted discharge is consistent with the antidegradation provision of 40 CFR 131.12 and Resolution No. 68-16.

O. Anti-Backsliding Requirements. Sections 303(d)(4) and 402(o)(2) of the CWA and federal regulations at 40 CFR 122.44(l) prohibit backsliding in NPDES permits. These anti-backsliding provisions require effluent limitations in a reissued permit to be as stringent as those in the previous permit, with some exceptions. Some effluent limitations in this Order are less stringent that those in Order R5-2007-0036-01. As

discussed in detail in the Fact Sheet, this relaxation of effluent limitations is consistent with the anti-backsliding requirements of the CWA and federal regulations.

P. Endangered Species Act. This Order does not authorize any act that results in the taking of a threatened or endangered species or any act that is now prohibited, or becomes prohibited in the future, under either the California Endangered Species Act (Fish and Game Code sections 2050 to 2097) or the Federal Endangered Species Act (16 U.S.C.A. sections 1531 to 1544). This Order requires compliance with effluent limits, receiving water limits, and other requirements to protect the beneficial uses of waters of the state. The discharger is responsible for meeting all requirements of the applicable Endangered Species Act.

Q. Monitoring and Reporting. 40 CFR 122.48 requires that all NPDES permits specify requirements for recording and reporting monitoring results. Water Code sections 13267 and 13383 authorize the Central Valley Water Board to require technical and monitoring reports. The Monitoring and Reporting Program establishes monitoring and reporting requirements to implement federal and State requirements. The Monitoring and Reporting Program is provided in Attachment E.

The technical and monitoring reports in this Order are required in accordance with Water Code section 13267, which states the following in subsection (b)(1), "*In conducting an investigation specified in subdivision (a), the regional board may require that any person who has discharged, discharges, or is suspected of having discharged or discharging, or who proposes to discharge waste within its region, or any citizen or domiciliary, or political agency or entity of this state who has discharged, discharges, or is suspected of having discharged or discharging, or who proposes to discharge, waste outside of its region that could affect the quality of waters within its region shall furnish, under penalty of perjury, technical or monitoring program reports which the regional board requires. The burden, including costs, of these reports shall bear a reasonable relationship to the need for the report and the benefits to be obtained from the reports. In requiring those reports, the regional board shall provide the person with a written explanation with regard to the need for the reports, and shall identify the evidence that supports requiring that person to provide the reports.*"

The Discharger owns and operates the Facility subject to this Order. The monitoring reports required by this Order are necessary to determine compliance with this Order. The need for the monitoring reports is discussed in the Fact Sheet.

R. Standard and Special Provisions. Standard Provisions, which apply to all NPDES permits in accordance with 40 CFR 122.41, and additional conditions applicable to specified categories of permits in accordance with 40 CFR 122.42, are provided in Attachment D. The discharger must comply with all standard provisions and with those additional conditions that are applicable under 40 CFR 122.42. The Central Valley Water Board has also included in this Order special provisions applicable to the Discharger. Some special provisions require submittal of technical reports. All technical reports are required in accordance with Water Code section 13267. The rationale for the special provisions and need for technical reports required in this Order is provided in the Fact Sheet.

S. Notification of Interested Parties. The Central Valley Water Board has notified the Discharger and interested agencies and persons of its intent to prescribe WDRs for the discharge and has provided them with an opportunity to submit their written comments and recommendations. Details of notification are provided in the Fact Sheet of this Order.

T. Consideration of Public Comment. The Central Valley Water Board, in a public meeting, heard and considered all comments pertaining to the discharge. Details of the Public Hearing are provided in the Fact Sheet.

THEREFORE, IT IS HEREBY ORDERED, that WDR Order R5-2007-0036-01 and TSO R5-2007-0037-01 are rescinded upon the effective date of this Order except for enforcement purposes, and, in order to meet the provisions contained in division 7 of the Water Code (commencing with section 13000) and regulations adopted thereunder, and the provisions of the federal CWA and regulations and guidelines adopted thereunder, the Discharger shall comply with the requirements in this Order.

III. DISCHARGE PROHIBITIONS

A. Discharge of treated wastewater at a location or in a manner different from that described in the Findings is prohibited.

B. The by-pass or overflow of wastes to surface waters is prohibited, except as allowed by Federal Standard Provisions I.G. and I.H. (Attachment D).

C. Neither the discharge nor its treatment shall create a nuisance as defined in section 13050 of the Water Code.

D. The Discharger shall not allow pollutant-free wastewater to be discharged into the treatment or disposal system in amounts that significantly diminish the system's capability to comply with this Order. Pollutant-free wastewater means rainfall, groundwater, cooling waters, and condensates that are essentially free of pollutants.

IV. EFFLUENT LIMITATIONS AND DISCHARGE SPECIFICATIONS

A. Effluent Limitations – Discharge Point No. 001 and Discharge Point No. 002

1. Final Effluent Limitations

a. The Discharger shall maintain compliance with the following effluent limitations at Discharge Point No. 001 and/or Discharge Point No. 002, with compliance measured at Monitoring Location EFF-001 as described in the Monitoring and Reporting Program:

Table 6. Effluent Limitations

Parameter	Units	Effluent Limitations				
		Average Monthly	Average Weekly	Maximum Daily	Instantaneous Minimum	Instantaneous Maximum
Biochemical Oxygen Demand (BOD) (5-day @ 20 Deg. C)	mg/L	10	15	20	--	--
	lbs/day[1]	900	1400	1800	--	--
	lbs/day[2]	1000	1500	2000	--	--
	lbs/day[3]	1100	1700	2300	--	--
	lbs/day[4]	1300	2000	2700	--	--
Total Suspended Solids	mg/L	10	15	20	--	--
	lbs/day[1]	900	1400	1800	--	--
	lbs/day[2]	1000	1500	2000	--	--
	lbs/day[3]	1100	1700	2300	--	--
	lbs/day[4]	1300	2000	2700	--	--
pH	standard units	--	--	--	6.5	8.5
Ammonia	mg/L	1.3	--	2.1	--	--
	lbs/day[1]	120	--	190	--	--
	lbs/day[2]	130	--	210	--	---
	lbs/day[3]	150	--	240	--	--
	lbs/day[4]	170	--	280	--	--

Parameter	Units	Effluent Limitations				
		Average Monthly	Average Weekly	Maximum Daily	Instantaneous Minimum	Instantaneous Maximum
Bis(2-ethylhexyl) phthalate	µg/L	12	--	49	--	--
Copper (total recoverable)	µg/L	--	--	10.4	--	--
Chlorodibromomethane	µg/L	8.0	--	18	--	--
Dichlorobromomethane	µg/L	11	--	23	--	--
Nitrate + Nitrite (as N)	mg/L	10	--	--	--	--

[1] Based on an existing permitted flow of 10.8 mgd. Mass limits effective immediately and until compliance with Special Provisions VI.C.6.a.
[2] Based on a permitted flow of 12 mgd. Mass limits effective upon compliance with Special Provisions VI.C.6.b.and until compliance with Special Provisions VI.C.6.c.
[3] Based on a permitted flow of 13.6 mgd. Mass limits effective upon compliance with Special Provisions VI.C.6.c. and until compliance with Special Provisions VI.C.6.d.
[4] Based on a permitted flow of 16 mgd. Mass limits effective upon compliance with Special Provisions VI.C.6.d.

b. Percent Removal. The average monthly percent removal of 5-day biochemical oxygen demand (BOD_5) and total suspended solids (TSS) shall not be less than 85 percent.

c. Acute Whole Effluent Toxicity. Survival of aquatic organisms in 96-hour bioassays of undiluted waste shall be no less than:

i. 70%, minimum for any one bioassay; and
ii. 90%, median for any three consecutive bioassays.

d. Temperature. The maximum temperature of the discharge shall not exceed the natural receiving water temperature by more than 20°F.

e. Total Residual Chlorine. Effluent total residual chlorine shall not exceed:

i. 0.011 mg/L, as a 4-day average; and
ii. 0.019 mg/L, as a 1-hour average.

f. Total Dissolved Solids. The effluent total calendar annual mass loading of total dissolved solids shall not exceed 13,688 tons.

g. Chronic Whole Effluent Toxicity. There shall be no chronic toxicity in the effluent discharge.

h. Total Coliform Organisms. Effluent total coliform organisms shall not exceed:

i. 2.2 most probable number (MPN) per 100 mL, as a 7-day median;
ii. 23 MPN/100 mL, more than once in any 30-day period; and
iii. 240 MPN/10 mL, at any time.

i. Methylmercury. The effluent calendar annual methylmercury load shall not exceed 0.77 grams, in accordance with the Delta Mercury Control Program.

j. Average Dry Weather Flow.

i. Effective immediately and until compliance with Special Provisions VI.C.6.a., the average dry weather flow shall not exceed **10.8 mgd**.

ii. Effective upon compliance with Special Provisions VI.C.6.a. and until compliance with Special Provisions VI.C.6.b., the average dry weather flow shall not exceed **12 mgd**.

iii. Effective upon compliance with Special Provisions VI.C.6.b. and until compliance with Special Provisions VI.C.6.c., the average dry weather flow shall not exceed **13.6 mgd**.

iv. Effective upon compliance with Special Provisions VI.C.6.d., the average dry weather flow shall not exceed **16 mgd**.

k. Chlorpyrifos and Diazinon. Effluent chlorpyrifos and diazinon concentrations shall not exceed the sum of one as defined below:

i. Average Monthly Effluent Limit

$$S_{AMEL} = \frac{C_{D\text{-}avg}}{0.08} + \frac{C_{C\text{-}avg}}{0.012} \leq 1.0$$

$C_{D\text{-}avg}$ = average monthly diazinon effluent concentration in µg/L
$C_{C\text{-}avg}$ = average monthly chlorpyrifos effluent concentration in µg/L

ii. Maximum Daily Effluent Limit

$$S_{MDEL} = \frac{C_{D\text{-}max}}{0.16} + \frac{C_{C\text{-}max}}{0.025} \leq 1.0$$

$C_{D\text{-}max}$ = maximum daily diazinon effluent concentration in µg/L
$C_{C\text{-}max}$ = maximum daily chlorpyrifos effluent concentration in µg/L

2. Interim Effluent Limitations

The Discharger shall maintain compliance with the following interim effluent limitations at Discharge Point No. 001 and/or Discharge Point No. 002, with compliance measured at Monitoring Location EFF-001 as described in the Monitoring and Reporting Program:

a. Mercury, Total. Effective immediately, and until 31 December 2030, the effluent calendar year annual total mercury load shall not exceed **41 grams**. These interim effluent limitations shall apply in lieu of the final effluent limits for methylmercury (Section IV.A.1.i).

B. Land Discharge Specifications – Set forth in WDR Order R5-2007-0038

C. Reclamation Specifications – Not Applicable

V. RECEIVING WATER LIMITATIONS

A. Surface Water Limitations

Receiving water limitations are based on water quality objectives contained in the Basin Plan and are a required part of this Order. The discharge shall not cause the following in Old River:

1. **Bacteria.** The fecal coliform concentration, based on a minimum of not less than five samples for any 30-day period, to exceed a geometric mean of 200 MPN/100 mL, nor more than 10 percent of the total number of fecal coliform samples taken during any 30-day period to exceed 400 MPN/100 mL.

2. **Biostimulatory Substances.** Water to contain biostimulatory substances which promote aquatic growths in concentrations that cause nuisance or adversely affect beneficial uses.

3. **Chemical Constituents.** Chemical constituents to be present in concentrations that adversely affect beneficial uses.

4. **Color.** Discoloration that causes nuisance or adversely affects beneficial uses.

5. **Dissolved Oxygen:** The dissolved oxygen concentration to be reduced below 5 mg/L.

6. **Floating Material.** Floating material to be present in amounts that cause nuisance or adversely affect beneficial uses.

7. **Oil and Grease.** Oils, greases, waxes, or other materials to be present in concentrations that cause nuisance, result in a visible film or coating on the surface of the water or on objects in the water, or otherwise adversely affect beneficial uses.

8. **pH.** The pH to be depressed below 6.5 nor raised above 8.5.

9. **Pesticides:**

   a. Pesticides to be present, individually or in combination, in concentrations that adversely affect beneficial uses;

   b. Pesticides to be present in bottom sediments or aquatic life in concentrations that adversely affect beneficial uses;

c. Total identifiable persistent chlorinated hydrocarbon pesticides to be present in the water column at concentrations detectable within the accuracy of analytical methods approved by USEPA or the Executive Officer;

d. Pesticide concentrations to exceed those allowable by applicable antidegradation policies (see State Water Board Resolution No. 68-16 and 40 CFR 131.12.);

e. Pesticide concentrations to exceed the lowest levels technically and economically achievable;

f. Pesticides to be present in concentration in excess of the maximum contaminant levels set forth in CCR, Title 22, division 4, chapter 15; nor

g. Thiobencarb to be present in excess of 1.0 µg/L.

10. Radioactivity:

a. Radionuclides to be present in concentrations that are harmful to human, plant, animal, or aquatic life nor that result in the accumulation of radionuclides in the food web to an extent that presents a hazard to human, plant, animal, or aquatic life.

b. Radionuclides to be present in excess of the maximum contaminant levels (MCLs) specified in Table 64442 of section 64442 and Table 64443 of section 64443 of Title 22 of the California Code of Regulations.

12. Suspended Sediments. The suspended sediment load and suspended sediment discharge rate of surface waters to be altered in such a manner as to cause nuisance or adversely affect beneficial uses.

13. Settleable Substances. Substances to be present in concentrations that result in the deposition of material that causes nuisance or adversely affects beneficial uses.

14. Suspended Material. Suspended material to be present in concentrations that cause nuisance or adversely affect beneficial uses.

15. Taste and Odors. Taste- or odor-producing substances to be present in concentrations that impart undesirable tastes or odors to fish flesh or other edible products of aquatic origin, or that cause nuisance, or otherwise adversely affect beneficial uses.

16. Temperature.

a. The creation of a zone, defined by water temperatures of more than 1°F above natural receiving water temperature, which exceeds 25 percent of the cross-sectional area of the river channel at any point.

b. A surface water temperature rise greater than 4°F above the natural temperature of the receiving water at any time or place.

17. Toxicity. Toxic substances to be present, individually or in combination, in concentrations that produce detrimental physiological responses in human, plant, animal, or aquatic life.

18. Turbidity.

a. Shall not exceed 2 Nephelometric Turbidity Units (NTU) where natural turbidity is less than 1 NTU;

b. Shall not increase more than 1 NTU where natural turbidity is between 1 and 5 NTUs;

c. Shall not increase more than 20 percent where natural turbidity is between 5 and 50 NTUs;

d. Shall not increase more than 10 NTU where natural turbidity is between 50 and 100 NTUs; nor

e. Shall not increase more than 10 percent where natural turbidity is greater than 100 NTUs.

B. Groundwater Limitations (Set forth in WDR Order R5-2007-0038)

VI. PROVISIONS

A. Standard Provisions

1. The Discharger shall comply with all Standard Provisions (federal NPDES standard conditions from 40 CFR Part 122) included in Attachment D of this Order.

2. The Discharger shall comply with the following provisions:

a. If the Discharger's wastewater treatment plant is publicly owned or subject to regulation by California Public Utilities Commission, it shall be supervised and operated by persons possessing certificates of appropriate grade according to Title 23, CCR, division 3, chapter 26.

b. After notice and opportunity for a hearing, this Order may be terminated or modified for cause, including, but not limited to:

i. violation of any term or condition contained in this Order;

ii. obtaining this Order by misrepresentation or by failing to disclose fully all relevant facts;

iii. a change in any condition that requires either a temporary or permanent reduction or elimination of the authorized discharge; and

iv. a material change in the character, location, or volume of discharge.

The causes for modification include:

- *New regulations.* New regulations have been promulgated under section 405(d) of the CWA, or the standards or regulations on which the permit was based have been changed by promulgation of amended standards or regulations or by judicial decision after the permit was issued.

- *Land application plans.* When required by a permit condition to incorporate a land application plan for beneficial reuse of sewage sludge, to revise an existing land application plan, or to add a land application plan.

- *Change in sludge use or disposal practice.* Under 40 CFR 122.62(a)(1), a change in the Discharger's sludge use or disposal practice is a cause for modification of the permit. It is cause for revocation and reissuance if the Discharger requests or agrees.

The Central Valley Water Board may review and revise this Order at any time upon application of any affected person or the Central Valley Water Board's own motion.

c. If a toxic effluent standard or prohibition (including any scheduled compliance specified in such effluent standard or prohibition) is established under section 307(a) of the CWA, or amendments thereto, for a toxic pollutant that is present in the discharge authorized herein, and such standard or prohibition is more stringent than any limitation upon such pollutant in this Order, the Central Valley Water Board will revise or modify this Order in accordance with such toxic effluent standard or prohibition.

The Discharger shall comply with effluent standards and prohibitions within the time provided in the regulations that establish those standards or prohibitions, even if this Order has not yet been modified.

d. This Order shall be modified, or alternately revoked and reissued, to comply with any applicable effluent standard or limitation issued or approved under sections 301(b)(2)(C) and (D), 304(b)(2), and 307(a)(2) of the CWA, if the effluent standard or limitation so issued or approved:

i. Contains different conditions or is otherwise more stringent than any effluent limitation in the Order; or

ii. Controls any pollutant limited in the Order.

The Order, as modified or reissued under this paragraph, shall also contain any other requirements of the CWA then applicable.

e. The provisions of this Order are severable. If any provision of this Order is found invalid, the remainder of this Order shall not be affected.

f. The Discharger shall take all reasonable steps to minimize any adverse effects to waters of the State or users of those waters resulting from any discharge or sludge use or disposal in violation of this Order. Reasonable steps shall include such accelerated or additional monitoring as necessary to determine the nature and impact of the non-complying discharge or sludge use or disposal.

g. The Discharger shall ensure compliance with any existing or future pretreatment standard promulgated by USEPA under section 307 of the CWA, or amendment thereto, for any discharge to the municipal system.

h. A copy of this Order shall be maintained at the discharge facility and be available at all times to operating personnel. Key operating personnel shall be familiar with its content.

i. Safeguard to electric power failure:

i. The Discharger shall provide safeguards to assure that, should there be reduction, loss, or failure of electric power, the discharge shall comply with the terms and conditions of this Order.

ii. Upon written request by the Central Valley Water Board, the Discharger shall submit a written description of safeguards. Such safeguards may include alternate power sources, standby generators, retention capacity, operating procedures, or other means. A description of the safeguards provided shall include an analysis of the frequency, duration, and impact of power failures experienced over the past 5 years on effluent quality and on the capability of the Discharger to comply with the terms and conditions of the Order. The adequacy of the safeguards is subject to the approval of the Central Valley Water Board.

iii. Should the treatment works not include safeguards against reduction, loss, or failure of electric power, or should the Central Valley Water Board not approve the existing safeguards, the Discharger shall, within 90 days of having been advised in writing by the Central Valley Water Board that the existing safeguards are inadequate, provide to the Central Valley Water Board and USEPA a schedule of compliance for providing safeguards such

that in the event of reduction, loss, or failure of electric power, the Discharger shall comply with the terms and conditions of this Order. The schedule of compliance shall, upon approval of the Central Valley Water Board, become a condition of this Order.

j. The Discharger, upon written request of the Central Valley Water Board, shall file with the Board a technical report on its preventive (failsafe) and contingency (cleanup) plans for controlling accidental discharges, and for minimizing the effect of such events. This report may be combined with that required under the Central Valley Water Board Standard Provision contained in section VI.A.2.i of this Order.

The technical report shall:

i. Identify the possible sources of spills, leaks, untreated waste by-pass, and contaminated drainage. Loading and storage areas, power outage, waste treatment unit outage, and failure of process equipment, tanks and pipes should be considered.

ii. Evaluate the effectiveness of present facilities and procedures and state when they became operational.

iii. Predict the effectiveness of the proposed facilities and procedures and provide an implementation schedule containing interim and final dates when they will be constructed, implemented, or operational.

The Central Valley Water Board, after review of the technical report, may establish conditions which it deems necessary to control accidental discharges and to minimize the effects of such events. Such conditions shall be incorporated as part of this Order, upon notice to the Discharger.

k. A publicly owned treatment works whose waste flow has been increasing, or is projected to increase, shall estimate when flows will reach hydraulic and treatment capacities of its treatment and disposal facilities. The projections shall be made in January, based on the last 3 years' average dry weather flows, peak wet weather flows and total annual flows, as appropriate. When any projection shows that capacity of any part of the facilities may be exceeded in 4 years, the Discharger shall notify the Central Valley Water Board by 31 January. A copy of the notification shall be sent to appropriate local elected officials, local permitting agencies and the press. Within 120 days of the notification, the Discharger shall submit a technical report showing how it will prevent flow volumes from exceeding capacity or how it will increase capacity to handle the larger flows. The Central Valley Water Board may extend the time for submitting the report.

l. The Discharger shall submit technical reports as directed by the Executive Officer. All technical reports required herein that involve planning, investigation, evaluation, or design, or other work requiring interpretation and proper application of engineering or geologic sciences, shall be prepared by or under the direction of persons registered to practice in California pursuant to California Business and Professions Code, sections 6735, 7835, and 7835.1. To demonstrate compliance with Title 16, CCR, sections 415 and 3065, all technical reports must contain a statement of the qualifications of the responsible registered professional(s). As required by these laws, completed technical reports must bear the signature(s) and seal(s) of the registered professional(s) in a manner such that all work can be clearly attributed to the professional responsible for the work.

m. The Central Valley Water Board is authorized to enforce the terms of this permit under several provisions of the Water Code, including, but not limited to, sections 13385, 13386, and 13387.

n. For publicly owned treatment works, prior to making any change in the point of discharge, place of use, or purpose of use of treated wastewater that results in a permanent decrease of flow in any portion of a watercourse, the Discharger must file a petition with the State Water Board, Division of Water Rights, and receive approval for such a change. (Water Code section 1211).

o. In the event the Discharger does not comply or will be unable to comply for any reason, with any prohibition, maximum daily effluent limitation, 1-hour average or instantaneous effluent limitation, or receiving water limitation contained in this Order, the Discharger shall notify the Central Valley Water Board by telephone (916) 464-3291 within 24 hours of having knowledge of such noncompliance, and shall confirm this notification in writing within 5 days, unless the Central Valley Water Board waives confirmation. The written notification shall include the information required by the Standard Provision contained in Attachment D section V.E.1. [40 CFR 122.41(l)(6)(i)].

p. Failure to comply with provisions or requirements of this Order, or violation of other applicable laws or regulations governing discharges from this facility, may subject the Discharger to administrative or civil liabilities, criminal penalties, and/or other enforcement remedies to ensure compliance. Additionally, certain violations may subject the Discharger to civil or criminal enforcement from appropriate local, state, or federal law enforcement entities.

q. In the event of any change in control or ownership of land or waste discharge facilities presently owned or controlled by the Discharger, the Discharger shall notify the succeeding owner or operator of the existence of this Order by letter, a copy of which shall be immediately forwarded to the Central Valley Water Board.

To assume operation under this Order, the succeeding owner or operator must apply in writing to the Executive Officer requesting transfer of the Order. The

request must contain the requesting entity's full legal name, the state of incorporation if a corporation, address and telephone number of the persons responsible for contact with the Central Valley Water Board and a statement. The statement shall comply with the signatory and certification requirements in the federal Standard Provisions (Attachment D, section V.B) and state that the new owner or operator assumes full responsibility for compliance with this Order. Failure to submit the request shall be considered a discharge without requirements, a violation of the Water Code. Transfer shall be approved or disapproved in writing by the Executive Officer.

B. Monitoring and Reporting Program Requirements

The Discharger shall comply with the Monitoring and Reporting Program, and future revisions thereto, in Attachment E of this Order.

C. Special Provisions

1. Reopener Provisions

a. Conditions that necessitate a major modification of a permit are described in 40 CFR 122.62, including, but not limited to:

i. If new or amended applicable water quality standards are promulgated or approved pursuant to section 303 of the CWA, or amendments thereto, this permit may be reopened and modified in accordance with the new or amended standards.

ii. When new information, that was not available at the time of permit issuance, would have justified different permit conditions at the time of issuance.

b. This Order may be reopened for modification, or revocation and reissuance, as a result of the detection of a reportable priority pollutant generated by special conditions included in this Order. These special conditions may be, but are not limited to, fish tissue sampling, whole effluent toxicity, monitoring requirements on internal waste stream(s), and monitoring for surrogate parameters. Additional requirements may be included in this Order as a result of the special condition monitoring data.

c. Mercury. The Basin Plan's Delta Mercury Control Program was designed to proceed in two phases. After Phase 1, the Central Valley Water Board will conduct a Phase 1 Delta Mercury Control Program Review that considers: modification to the Delta Mercury Control Program. This Order may be reopened to address changes to the Delta Mercury Control Program.

d. Bay-Delta Plan South Delta Salinity Objectives Update. The State Water Board is currently in the process of updating the South Delta Salinity Objectives contained in the Bay-Delta Plan. The updated salinity objectives may result in needed changes to the salinity requirements in this Order. Therefore, this Order

may be reopened to modify salinity requirements, as appropriate, in accordance with changes to the Bay-Delta Plan.

e. **Pollution Prevention.** This Order requires the Discharger prepare pollution prevention plans following Water Code section 13263.3(d)(3) for salinity and mercury. Based on a review of the pollution prevention plans, this Order may be reopened for addition and/or modification of effluent limitations and requirements for these constituents.

f. **Whole Effluent Toxicity.** As a result of a Toxicity Reduction Evaluation (TRE), this Order may be reopened to include a numeric chronic toxicity limitation, a new acute toxicity limitation, and/or a limitation for a specific toxicant identified in the TRE. Additionally, if the State Water Board revises the SIP's toxicity control provisions, this Order may be reopened to be consistent with the new provisions.

g. **Water Effects Ratios (WER) and Metal Translators.** A default WER of 1.0 and default metal translators have been used in this Order for calculating CTR criteria for applicable priority pollutant inorganic constituents. If the Discharger performs studies to determine site-specific WERs and/or site-specific dissolved-to-total metal translators, this Order may be reopened to modify the effluent limitations for the applicable inorganic constituents.

h. **Regional Monitoring Program.** The Central Valley Water Board is developing a Regional Monitoring Program for the Sacrament-San Joaquin Delta. This Order may be reopened to modify the monitoring requirements to implement the Regional Monitoring Program.

i. **Drinking Water Policy**. The Central Valley Water Board is developing a Drinking Water Policy. This Order may be reopened to incorporate monitoring of drinking water constituents to implement the Drinking Water Policy.

2. Special Studies, Technical Reports and Additional Monitoring Requirements

a. **Chronic Whole Effluent Toxicity.** For compliance with the Basin Plan's narrative toxicity objective, this Order requires the Discharger to conduct chronic whole effluent toxicity (WET) testing, as specified in the Monitoring and Reporting Program (Attachment E, section V). Furthermore, this Provision requires the Discharger to investigate the causes of, and identify corrective actions to reduce or eliminate effluent toxicity. If the discharge exhibits toxicity, as described in subsection ii below, the Discharger is required to initiate a TRE in accordance with an approved TRE Workplan, and take actions to mitigate the impact of the discharge and prevent recurrence of toxicity. A TRE is a site-specific study conducted in a stepwise process to identify the source(s) of toxicity and the effective control measures for effluent toxicity. TREs are designed to identify the causative agents and sources of effluent toxicity, evaluate the effectiveness of the toxicity control options, and confirm the reduction in effluent toxicity. This Provision includes procedures for accelerated chronic toxicity monitoring and TRE initiation.

i. Accelerated Monitoring and TRE Initiation. When the numeric toxicity monitoring trigger is exceeded during regular chronic toxicity monitoring, the Discharger shall initiate accelerated monitoring as required in the Accelerated Monitoring Specifications. The Discharger shall initiate a TRE to address effluent toxicity if any WET testing results exceed the numeric toxicity monitoring trigger during accelerated monitoring.

ii. Numeric Toxicity Monitoring Trigger. The numeric toxicity monitoring trigger to initiate a TRE is > **1 TU_C** (where TU_C = 100/NOEC). The monitoring trigger is not an effluent limitation; it is the toxicity threshold at which the Discharger is required to begin accelerated monitoring and initiate a TRE when the effluent exhibits toxicity.

iii. Accelerated Monitoring Specifications. If the numeric toxicity monitoring trigger is exceeded during regular chronic toxicity testing, the Discharger shall initiate accelerated monitoring within 14 days of notification by the laboratory of the exceedance. Accelerated monitoring shall consist of four (4) chronic toxicity tests conducted once every 2 weeks using the species that exhibited toxicity. The following protocol shall be used for accelerated monitoring and TRE initiation:

(a) If the results of four (4) consecutive accelerated monitoring tests do not exceed the monitoring trigger, the Discharger may cease accelerated monitoring and resume regular chronic toxicity monitoring. However, notwithstanding the accelerated monitoring results, if there is evidence of effluent toxicity, the Executive Officer may require that the Discharger initiate a TRE.

(b) If the source(s) of the toxicity is easily identified (e.g., temporary plant upset), the Discharger shall make necessary corrections to the facility and shall continue accelerated monitoring until four (4) consecutive accelerated tests do not exceed the monitoring trigger. Upon confirmation that the effluent toxicity has been removed, the Discharger may cease accelerated monitoring and resume regular chronic toxicity monitoring.

(c) If the result of any accelerated toxicity test exceeds the monitoring trigger, the Discharger shall cease accelerated monitoring and begin a TRE to investigate the cause(s) of, and identify corrective actions to reduce or eliminate effluent toxicity. Within thirty (30) days of notification by the laboratory of any test result exceeding the monitoring trigger during accelerated monitoring, the Discharger shall submit a TRE Action Plan to the Central Valley Water Board including, at minimum:

(1) Specific actions the Discharger will take to investigate and identify the cause(s) of toxicity, including a TRE WET monitoring schedule;

(2) Specific actions the Discharger will take to mitigate the impact of the discharge and prevent the recurrence of toxicity; and

(3) A schedule for these actions.

b. **Phase 1 Methylmercury Control Study.** In accordance with the Basin Plan's Delta Mercury Control Program and the compliance schedule included in this Order for methylmercury (Section VI.C.7.a), the Discharger shall participate in the Central Valley Clean Water Association (CVCWA) Coordinated Methylmercury Control Study (Study) to evaluate existing control methods and, as needed, develop additional control methods that could be implemented to achieve the methylmercury waste load allocation. A work plan shall be submitted by **20 April 2013**. The study work plan will be reviewed by a Technical Advisory Committee (TAC) and approved by the Executive Officer. The work plan shall be implemented immediately after approval by the Executive Officer, and a progress report shall be submitted by **20 October 2015.**

The Study shall evaluate the feasibility of reducing sources more than the minimum amount needed to achieve the methylmercury allocation. The Study also may include an evaluation of innovative actions, watershed approaches, offsets projects, and other short and long-term actions that result in reducing inorganic (total) mercury and methylmercury to address the accumulation of methylmercury in fish tissue and to reduce methylmercury exposure. The Study may evaluate the effectiveness of using inorganic (total) mercury controls to control methylmercury discharges.

The Study shall include a description of methylmercury and/or inorganic (total) mercury management practices identified in Phase 1; an evaluation of the effectiveness, costs, potential environmental effects, and overall feasibility of the control actions. The Study shall also include proposed implementation plans and schedules to comply with methylmercury allocations as soon as possible. The Study shall be submitted to the Central Valley Water Board by **20 October 2018.**

The Executive Officer may, after public notice, may extend the due date up to two years if the Discharger demonstrates it is making significant progress towards developing, implementing and/or completing the Study and reasonable attempts have been made to secure funding for the Study, but the Discharger has experienced severe budget shortfalls.

3. **Best Management Practices and Pollution Prevention**

a. **Pollution Prevention Plan for Mercury.** The Discharger shall update and implement a pollution prevention plan (PPP) for mercury in accordance with Water Code section 13263.3(d)(3), per the compliance schedule in this Order for methylmercury (Section VI.C.7.a). The minimum requirements for the

pollution prevention plan are outlined in the Fact Sheet (Attachment F section VII.B.3.c). Progress reports shall be submitted annually in accordance with the Monitoring and Reporting Program *(Attachment E section X.D.1.).* The progress reports shall discuss the effectiveness of the PPP in the reduction of mercury in the discharge, include a summary of mercury and methylmercury monitoring results, and discuss updates to the PPP.

b. **Mercury Exposure Reduction Program.** The Discharger shall participate in a mercury Exposure Reduction Program in accordance with the Basin Plan's Delta Mercury Control Program. The Discharger, either individually or collectively with other Delta dischargers, shall submit an exposure reduction work plan for Executive Officer approval by **20 October 2013**. The objective of the Exposure Reduction Program is to reduce mercury exposure of Delta fish consumers most likely affected by mercury. The work plan shall address the Exposure Reduction Program objective, elements, and the Discharger's coordination with other stakeholders. The minimum requirements for the exposure reduction work plan are outlined in the Fact Sheet (Attachment F section VII.B.3.b). The Discharger shall integrate or, at minimum, provide good-faith opportunities for integration of community-based organizations, tribes, and consumers of Delta fish into planning, decision making, and implementation of exposure reduction activities. **The Discharger shall implement the work plan within six months of Executive Officer approval.**

c. **Salinity Reduction Plan.** The Discharger shall maintain the Salinity Reduction Plan, submitted on 30 June 2008, that describes the Discharger's approach to identify, evaluate, and implement measures to reduce salinity in the effluent discharge to Old River. The Discharger shall submit annual progress reports in accordance the Monitoring and Reporting Program (*Attachment E section X.D.1.)*. The Salinity Reduction Plan shall, at minimum, contain the following:

   i. **Pollution Prevention Plan (PPP).** The Discharger submitted a PPP for salinity that meets the requirements of Water Code section 13263.3(d)(3). The Discharger shall continue to implement the PPP and evaluate and update the PPP annually. The annual progress reports for the Salinity Reduction Plan shall include a discussion of the effectiveness of the PPP and any updates to the PPP.

   ii. **Salinity Reduction Goal.** The Central Valley Water Board finds that a calendar annual average of 500 µmhos/cm as electrical conductivity increase over the calendar annual weighted average electrical conductivity of the City of Tracy's water supply is a reasonable increase due to consumptive use in the community. The annual progress reports for the Salinity Reduction Plan shall include a discussion of the progress in meeting the salinity reduction goal.

   iii. **Best Practicable Treatment or Control (BPTC) Evaluation for Salinity.** The Discharger submitted a BPTC evaluation dated 13 September 2011. By **1 September 2016**, the Discharger shall update and submit a BPTC

evaluation for salinity that considers new information that was not available at the time the September 2011 BPTC evaluation was developed.

iv. **Central Valley Salinity Alternatives for Long-Term Sustainability (CV-SALTS) Participation.** The Discharger shall participate in CV-SALTS. The annual progress reports for the Salinity Reduction Plan shall include a discussion of the Discharger's participation in CV-SALTS.

v. **Lower Salinity Water Supply Sources.** The Salinity Reduction Plan shall include a discussion of the Discharger's efforts to obtain lower salinity water supplies and the annual progress reports for the Salinity Reduction Plan shall include a discussion of the Discharger's efforts in this area.

4. Construction, Operation and Maintenance Specifications

a. Turbidity. The Discharger shall operate the treatment system to ensure that the turbidity measured at EFF-001, as described in the MRP (Attachment E), shall not exceed:

i. 2 NTU, as a daily average;
ii. 5 NTU, more than 5% of the time within a 24-hour period;
iii. 10 NTU, at any time.

5. Special Provisions for Municipal Facilities (POTWs Only)

a. Pretreatment Requirements.

i. The Discharger shall be responsible and liable for the performance of all Control Authority pretreatment requirements contained in 40 CFR Part 403, including any subsequent regulatory revisions to 40 CFR Part 403. Where 40 CFR Part 403 or subsequent revision places mandatory actions upon the Discharger as Control Authority but does not specify a timetable for completion of the actions, the Discharger shall complete the required actions within 6 months from the issuance date of this permit or the effective date of the 40 CFR Part 403 revisions, whichever comes later. For violations of pretreatment requirements, the Discharger shall be subject to enforcement actions, penalties, fines, and other remedies by USEPA or other appropriate parties, as provided in the CWA.

ii. The Discharger shall enforce the requirements promulgated under sections 307(b), 307(c), 307(d), and 402(b) of the CWA with timely, appropriate and effective enforcement actions. The Discharger shall cause all nondomestic users subject to federal categorical standards to achieve compliance no later than the date specified in those requirements or, in the case of a new nondomestic user, upon commencement of the discharge.

iii. The Discharger shall perform the pretreatment functions as required in 40 CFR Part 403 including, but not limited to:

(a) Implement the necessary legal authorities as provided in 40 CFR 403.8(f)(1);

(b) Enforce the pretreatment requirements under 40 CFR 403.5 and 403.6;

(c) Implement the programmatic functions as provided in 40 CFR 403.8(f)(2); and

(d) Provide the requisite funding and personnel to implement the pretreatment program as provided in 40 CFR 403.8(f)(3).

iv. The Discharger shall implement, as more completely set forth in 40 CFR 403.5, the necessary legal authorities, programs, and controls to ensure that the following incompatible wastes are not introduced to the treatment system, where incompatible wastes are:

(a) Wastes which create a fire or explosion hazard in the treatment works;

(b) Wastes which will cause corrosive structural damage to treatment works, but in no case wastes with a pH lower than 5.0, unless the works is specially designed to accommodate such wastes;

(c) Solid or viscous wastes in amounts which cause obstruction to flow in sewers, or which cause other interference with proper operation or treatment works;

(d) Any waste, including oxygen demanding pollutants (BOD, etc.), released in such volume or strength as to cause inhibition or disruption in the treatment works, and subsequent treatment process upset and loss of treatment efficiency;

(e) Heat in amounts that inhibit or disrupt biological activity in the treatment works, or that raise influent temperatures above 40°C (104°F), unless the Central Valley Water Board approves alternate temperature limits;

(f) Petroleum oil, non-biodegradable cutting oil, or products of mineral oil origin in amounts that will cause interference or pass through;

(g) Pollutants which result in the presence of toxic gases, vapors, or fumes within the treatment works in a quantity that may cause acute worker health and safety problems; and:

(h) Any trucked or hauled pollutants, except at points predesignated by the Discharger.

v. The Discharger shall implement, as more completely set forth in 40 CFR 403.5, the legal authorities, programs, and controls necessary to ensure that indirect discharges do not introduce pollutants into the sewerage system that, either alone or in conjunction with a discharge or discharges from other sources:

(a) Flow through the system to the receiving water in quantities or concentrations that cause a violation of this Order, or:

(b) Inhibit or disrupt treatment processes, treatment system operations, or sludge processes, use, or disposal and either cause a violation of this Order or prevent sludge use or disposal in accordance with this Order.

d. Collection System. On 2 May 2006, the State Water Board adopted State Water Resources Control Board Order 2006-0003-DWQ, Statewide General Waste Discharge Requirements (WDRs) for Sanitary Sewer Systems. The Discharger shall be separately subject to the requirements of Order 2006-0003-DWQ and any future revisions thereto. Order 2006-0003-DWQ requires that all public agencies that currently own or operate sanitary sewer systems apply for coverage under the general WDRs. The Discharger has applied for and has been approved for coverage, effective 16 October 2006, under Order 2006-0003-DWQ for operation of its wastewater collection system.

6. Other Special Provisions

a. Phase 2 Improvements. The Discharger has requested an expansion of allowable flows to be discharged to Old River. The permitted average dry weather discharge flow may increase to 12 mgd upon compliance with the following conditions:

i. **Facility Improvements.** The Discharger shall have completed construction of its Phase 2 improvements, which include construction of a second outfall pipeline and diffuser and paving of additional sludge drying beds. The Discharger shall provide certification of completion by the design engineer.

ii. **Thermal Plan Compliance.** The Discharger shall provide information demonstrating the increased discharge will comply with Receiving Water Limitations V.A.16.

iii. **Request for Increase.** The Discharger shall submit a request for an increase in the permitted discharge flow rate, which demonstrates compliance with items i. through ii., above. The increase in the permitted discharge flow rate shall not be effective until the Executive Officer verifies compliance with Special Provisions VI.C.6.a and approves the request.

b. Phase 3 Improvements. The Discharger has requested an expansion of allowable flows to be discharged to Old River. The permitted average dry weather discharge flow may increase to 13.6 mgd upon compliance with the following conditions:

i. **Facility Improvements.** The Discharger shall have completed construction of its Phase 3 improvements, which include construction of one aeration basin and secondary clarifier, installation of a new filter pump for tertiary treatment, and paving of sludge drying beds. The Discharger shall provide certification of completion by the design engineer.

ii. **Thermal Plan Compliance.** The Discharger shall provide information demonstrating the increased discharge will comply with Receiving Water Limitations V.A.16.

iii. **Request for Increase.** The Discharger shall submit a request for an increase in the permitted discharge flow rate, which demonstrates compliance with items i. through ii., above. The increase in the permitted discharge flow rate shall not be effective until the Executive Officer verifies compliance with Special Provisions VI.C.6.a and approves the request.

c. Phase 4 Improvements. The Discharger has requested an expansion of allowable flows to be discharged to Old River. The permitted average dry weather discharge flow may increase to 16 mgd upon compliance with the following conditions:

i. **Facility Improvements.** The Discharger shall have completed construction of its Phase 4 improvements, which include construction of a new primary clarifier, replacement of two effluent pumps with larger capacity pumps, construction of a sludge digester, and paving the remaining sludge drying beds. The Discharger shall provide certification of completion by the design engineer.

ii. **Thermal Plan Compliance.** The Discharger shall provide information demonstrating the increased discharge will comply with Receiving Water Limitations V.A.16.

iii. **Request for Increase.** The Discharger shall submit a request for an increase in the permitted discharge flow rate, which demonstrates compliance with items i. through ii., above. The increase in the permitted discharge flow rate shall not be effective until the Executive Officer verifies compliance with Special Provisions VI.C.6.a and approves the request.

d. Title 22, or Equivalent, Disinfection Requirements. Wastewater shall be oxidized, coagulated, filtered, and adequately disinfected pursuant to the Department of Public Health (DPH) reclamation criteria, CCR, Title 22, division 4, chapter 3, (Title 22), or equivalent.

7. Compliance Schedules

a. Compliance Schedule for Final Effluent Limitations for Methylmercury. This Order requires compliance with the final effluent limitations for methylmercury by **31 December 2030.** The Discharger shall comply with the following time schedule to ensure compliance with the final effluent limitations:

Task	Date Due
Phase 1	
i. Submit CVCWA Coordinated Methylmercury Control Study Work Plan	**20 April 2013**
ii. Update and Implement Pollution Prevention Plan (PPP)[1] for Mercury (per Section VI.C.3.a)	**1 June 2013**
iii. Submit Mercury Exposure Reduction Work Plan (per Section VI.C.3.b)	**20 October 2013**
iv. Implement CVCWA Coordinated Methylmercury Control Study Work Plan	**Immediately following Executive Officer Approval**
v. Implement Mercury Exposure Reduction Work Plan (per Section VI.C.3.b)	**6 months following Executive Officer Approval**
vi. Annual Progress Reports[2]	**20 October 2014** **20 October 2015** **20 October 2016** **20 October 2017**
vii. Submit CVCWA Coordinated Methylmercury Control Study Progress Report	**20 October 2015**
viii. Submit Final CVCWA Coordinated Methylmercury Control Study	**20 October 2018**[4]
Phase 2	
ix. Implement methylmercury control programs	**TBD**[3]
x. Full Compliance	**31 December 2030**[3]

1 The PPP for Mercury shall be updated and implemented in accordance with Section VI.C.3.a. The Discharger shall continue to implement its existing PPP for mercury during the period in which it updates the PPP.

2 The progress reports shall detail what steps have been implemented towards achieving compliance with waste discharge requirements, including studies, construction progress, evaluation of measures implemented, sources of funding, and recommendations for additional measures as necessary to achieve full compliance by the final compliance date.

3 To be determined. Following Phase 1 the Central Valley Water Board will conduct a Phase 1 Delta Mercury Control Program Review that considers: modification of methylmercury goals, objectives, allocations, final compliance date, etc. Consequently, the start of Phase 2 and the final compliance date is uncertain at the time this Order was adopted.

4 The Executive Officer may, after public notice, extend the due date for the Final CVCWA Coordinated Methylmercury Control Study up to two years if the Discharger demonstrates it is making significant progress towards developing, implementing and/or completing the Study and reasonable attempts have been made to secure funding for the Study, but the Discharger has experienced severe budget shortfalls.

VII. COMPLIANCE DETERMINATION

A. BOD_5 and TSS Effluent Limitations (Section IV.A.1.a and b). Compliance with the final effluent limitations for BOD_5 and TSS required in Limitations and Discharge Requirements Section IV.A.1.a shall be ascertained by 24-hour composite samples. Compliance with effluent limitations required in Limitations and Discharge Requirements Section IV.A.1.b for percent removal shall be calculated using the arithmetic mean of BOD_5 and TSS in effluent samples collected over a monthly period as a percentage of the arithmetic mean of the values for influent samples collected at approximately the same times during the same period.

B. Total Calendar Annual Mass Loading Effluent Limitations (Total Dissolved Solids, Section IV.A.1.f, and Total Mercury, Section IV.A.2.a). The procedures for calculating calendar annual mass loading are as follows:

1. The total pollutant mass load for each individual calendar month shall be determined using an average of all concentration data collected that month and the corresponding total monthly flow. All effluent monitoring data collected under the monitoring and reporting program, pretreatment program, and any special studies shall be used for these calculations. The total calendar annual mass loading shall be the sum of the individual calendar months.

2. In calculating compliance, the Discharger shall count all non-detect measures at one-half of the method detection level. If compliance with the effluent limitation is not attained due to the non-detect contribution, the Discharger shall improve and implement available analytical capabilities and compliance shall be evaluated with consideration of the method detection limits.

C. Average Dry Weather Flow Effluent Limitations (Section IV.A.1.j). The average dry weather discharge flow represents the daily average flow when groundwater is at or near normal and runoff is not occurring. Compliance with the average dry weather flow effluent limitations will be determined annually based on the average daily flow over three consecutive dry weather months (e.g., July, August, and September).

D. Total Coliform Organisms Effluent Limitations (Section IV.A.1.h). For each day that an effluent sample is collected and analyzed for total coliform organisms, the 7-day median shall be determined by calculating the median concentration of total coliform bacteria in the effluent utilizing the bacteriological results of the last 7 days. For example, if a sample is collected on a Wednesday, the result from that sampling event and all results from the previous 6 days (i.e., Tuesday, Monday, Sunday, Saturday, Friday, and Thursday) are used to calculate the 7-day median. If the 7-day median of total coliform organisms exceeds a most probable number (MPN) of 2.2 per 100 milliliters, the Discharger will be considered out of compliance.

E. Total Residual Chlorine Effluent Limitations (Section IV.A.1.e). Continuous monitoring analyzers for chlorine residual or for dechlorination agent residual in the effluent are appropriate methods for compliance determination. A positive residual dechlorination agent in the effluent indicates that chlorine is not present in the

discharge, which demonstrates compliance with the effluent limitations. This type of monitoring can also be used to prove that some chlorine residual exceedances are false positives. Continuous monitoring data showing either a positive dechlorination agent residual or a chlorine residual at or below the prescribed limit are sufficient to show compliance with the total residual chlorine effluent limitations, as long as the instruments are maintained and calibrated in accordance with the manufacturer's recommendations.

Any excursion above the 1-hour average or 4-day average total residual chlorine effluent limitations is a violation. If the Discharger conducts continuous monitoring and the Discharger can demonstrate, through data collected from a back-up monitoring system, that a chlorine spike recorded by the continuous monitor was not actually due to chlorine, then any excursion resulting from the recorded spike will not be considered an exceedance, but rather reported as a false positive. Records supporting validation of false positives shall be maintained in accordance with Section IV Standard Provisions (Attachment D).

F. **Mass Effluent Limitations.** The mass effluent limitations contained in the Final Effluent Limitations IV.A.1.a are based on the permitted average dry weather flow and calculated as follows:.

Mass (lbs/day) = Flow (MGD) x Concentration (mg/L) x 8.34 (conversion factor)

If the effluent flow exceeds the permitted average dry weather flow during wet-weather, the effluent mass limitations contained in Final Effluent Limitations IV.A.1.a shall not apply. If the effluent flow is below the permitted average dry weather flow during wet-weather, the effluent mass limitations do apply.

G. **Priority Pollutant Effluent Limitations.** Compliance with effluent limitations for priority pollutants shall be determined using sample reporting protocols defined in Attachment A and Attachment E of this Order. For purposes of reporting and administrative enforcement by the Central Valley Water Board and the State Water Board, the Discharger shall be deemed out of compliance with effluent limitations if the concentration of the priority pollutant in the effluent sample is greater than the effluent limitation and greater than or equal to the reporting level (RL), per Section 2.4.5 of the SIP.

H. **Chronic Whole Effluent Toxicity Effluent Limitation (Section IV.A.1.g).** Compliance with the accelerated monitoring and TRE provisions of Provision VI.C.2.a shall constitute compliance with the effluent limitation.

I. **Temperature Receiving Water Limitations (Section V.A.16.b).** Effective immediately and until discharge at Discharge Point No. 002 commences, compliance with the temperature receiving water limitation will be determined based on the difference in the temperature measured at RSW-002 as compared to the downstream at RSW-003. Effective when discharge at Discharge Point No. 002 commences, compliance with the temperature receiving water limitation will be determined based

on the difference in the temperature measured at RSW-002 as compared to the downstream at RSW-004.

J. **Turbidity Receiving Water Limitations (Section V.A.18.a-e).** Effective immediately and until discharge at Discharge Point No. 002 commences, compliance with the turbidity receiving water limitations will be determined based on the change in turbidity measured at RSW-002 as compared to the downstream at RSW-003. Effective when discharge at Discharge Point No. 002 commences, compliance with the turbidity receiving water limitations will be determined based on the change in turbidity measured at RSW-002 as compared to the downstream at RSW-004.

K. **Temperature Effluent Limitations (Section IV.A.1.d).** Compliance with the final effluent limitations for temperature shall be ascertained using the daily average effluent temperature at monitoring location EFF-001 and the temperature of the receiving water measured on the same day by grab sample at RSW-001.

L. **Chlorpyrifos and Diazinon Effluent Limitations (Section IV.A.1.k).** Compliance shall be determined by calculating the sum (S), as provided in this Order, with analytical results that are reported as “non-detectable” concentrations to be considered to be zero.

ATTACHMENT A – DEFINITIONS

Acute Toxic Unit (TU_a)
The reciprocal of the effluent concentration that causes 50 percent of the organisms to die in an acute toxicity test ($TU_a = 100/LC_{50}$) (see LC_{50}).

Arithmetic Mean (μ)
Also called the average, is the sum of measured values divided by the number of samples. For ambient water concentrations, the arithmetic mean is calculated as follows:

Arithmetic mean = $\mu = \Sigma x / n$ where: Σx is the sum of the measured ambient water concentrations, and n is the number of samples.

Average Monthly Effluent Limitation (AMEL)
The highest allowable average of daily discharges over a calendar month, calculated as the sum of all daily discharges measured during a calendar month divided by the number of daily discharges measured during that month.

Average Weekly Effluent Limitation (AWEL)
The highest allowable average of daily discharges over a calendar week (Sunday through Saturday), calculated as the sum of all daily discharges measured during a calendar week divided by the number of daily discharges measured during that week.

Best Practicable Treatment or Control (BPTC)
BPTC is a requirement of State Water Resources Control Board Resolution 68-16 – "Statement of Policy with Respect to Maintaining High Quality of Waters in California" (referred to as the "Antidegradation Policy"). BPTC is the treatment or control of a discharge necessary to assure that, "*(a) a pollution or nuisance will not occur and (b) the highest water quality consistent with maximum benefit to the people of the State will be maintained.*" Pollution is defined in CWC Section 13050(I). In general, an exceedance of a water quality objective in the Basin Plan constitutes "pollution".

Bioaccumulative
Those substances taken up by an organism from its surrounding medium through gill membranes, epithelial tissue, or from food and subsequently concentrated and retained in the body of the organism.

Biosolids
Sludge that has been treated and tested and shown to be capable of being beneficially and legally used pursuant to federal and state regulations as a soil amendment for agriculture, silviculture, horticulture, and land reclamation activities.

Carcinogenic
Pollutants are substances that are known to cause cancer in living organisms.

Chronic Toxic Unit (TU_c)
The reciprocal of the effluent concentration that causes no observable effect on the test organisms in a chronic toxicity test (TU_c = 100/NOEC) (see NOEC).

Coefficient of Variation (CV)
CV is a measure of the data variability and is calculated as the estimated standard deviation divided by the arithmetic mean of the observed values.

Daily Discharge
Daily Discharge is defined as either: (1) the total mass of the constituent discharged over the calendar day (12:00 am through 11:59 pm) or any 24-hour period that reasonably represents a calendar day for purposes of sampling (as specified in the permit), for a constituent with limitations expressed in units of mass or; (2) the unweighted arithmetic mean measurement of the constituent over the day for a constituent with limitations expressed in other units of measurement (e.g., concentration).

The daily discharge may be determined by the analytical results of a composite sample taken over the course of 1 day (a calendar day or other 24-hour period defined as a day) or by the arithmetic mean of analytical results from one or more grab samples taken over the course of the day.

For composite sampling, if 1 day is defined as a 24-hour period other than a calendar day, the analytical result for the 24-hour period will be considered as the result for the calendar day in which the 24-hour period ends.

Detected, but Not Quantified (DNQ)
DNQ are those sample results less than the RL, but greater than or equal to the laboratory's MDL.

Dilution Credit
Dilution Credit is the amount of dilution granted to a discharge in the calculation of a water quality-based effluent limitation, based on the allowance of a specified mixing zone. It is calculated from the dilution ratio or determined through conducting a mixing zone study or modeling of the discharge and receiving water.

Effect Concentration (EC)
A point estimate of the toxicant concentration that would cause an observable adverse effect (e.g. death, immobilization, or serious incapitation) in a given percent of the test organisms, calculated from a continuous model (e.g. Probit Model). EC_{25} is a point estimate of the toxicant concentration that would cause an observable adverse effect in 25 percent of the test organisms.

Effluent Concentration Allowance (ECA)
ECA is a value derived from the water quality criterion/objective, dilution credit, and ambient background concentration that is used, in conjunction with the coefficient of variation for the effluent monitoring data, to calculate a long-term average (LTA) discharge concentration. The ECA has the same meaning as waste load allocation (WLA) as used in USEPA guidance

(Technical Support Document For Water Quality-based Toxics Control, March 1991, second printing, EPA/505/2-90-001).

Enclosed Bays
Enclosed Bays means indentations along the coast that enclose an area of oceanic water within distinct headlands or harbor works. Enclosed bays include all bays where the narrowest distance between the headlands or outermost harbor works is less than 75 percent of the greatest dimension of the enclosed portion of the bay. Enclosed bays include, but are not limited to, Humboldt Bay, Bodega Harbor, Tomales Bay, Drake's Estero, San Francisco Bay, Morro Bay, Los Angeles-Long Beach Harbor, Upper and Lower Newport Bay, Mission Bay, and San Diego Bay. Enclosed bays do not include inland surface waters or ocean waters.

Estimated Chemical Concentration
The estimated chemical concentration that results from the confirmed detection of the substance by the analytical method below the ML value.

Estuaries
Estuaries means waters, including coastal lagoons, located at the mouths of streams that serve as areas of mixing for fresh and ocean waters. Coastal lagoons and mouths of streams that are temporarily separated from the ocean by sandbars shall be considered estuaries. Estuarine waters shall be considered to extend from a bay or the open ocean to a point upstream where there is no significant mixing of fresh water and seawater. Estuarine waters included, but are not limited to, the Sacramento-San Joaquin Delta, as defined in Water Code section 12220, Suisun Bay, Carquinez Strait downstream to the Carquinez Bridge, and appropriate areas of the Smith, Mad, Eel, Noyo, Russian, Klamath, San Diego, and Otay rivers. Estuaries do not include inland surface waters or ocean waters.

Inhibition Concentration (IC)
A point estimate of the toxicant concentration that would cause a given percent reduction in a non-lethal biological measurement (e.g. reproduction or growth), calculated from a continuous model (e.g. Interpolation Method). IC_{25} is a point estimate of the toxicant concentration that would cause a 25 percent reduction in a non-lethal biological measurement.

Inland Surface Waters
All surface waters of the State that do not include the ocean, enclosed bays, or estuaries.

Instantaneous Maximum Effluent Limitation
The highest allowable value for any single grab sample or aliquot (i.e., each grab sample or aliquot is independently compared to the instantaneous maximum limitation).

Instantaneous Minimum Effluent Limitation
The lowest allowable value for any single grab sample or aliquot (i.e., each grab sample or aliquot is independently compared to the instantaneous minimum limitation).

LC_{50}, Lethal Concentration, 50 percent
The toxic or effluent concentration that would cause death in 50 percent of the test organisms over a specified period of time.

NOEC, No Observed Effect Concentration
The highest tested concentration of an effluent or test sample whose effect is not different from the control effect, according to the statistical test used (see LOEC). The NOEC is usually the highest tested concentration of an effluent or toxic that causes no observable effects on the test organisms (i.e. the highest concentration of toxicity at which the values for the observed responses do not statistically differ from the controls).

Maximum Daily Effluent Limitation (MDEL)
The highest allowable daily discharge of a pollutant, over a calendar day (or 24-hour period). For pollutants with limitations expressed in units of mass, the daily discharge is calculated as the total mass of the pollutant discharged over the day. For pollutants with limitations expressed in other units of measurement, the daily discharge is calculated as the arithmetic mean measurement of the pollutant over the day.

Median
The middle measurement in a set of data. The median of a set of data is found by first arranging the measurements in order of magnitude (either increasing or decreasing order). If the number of measurements (n) is odd, then the median = $X_{(n+1)/2}$. If n is even, then the median = $(X_{n/2} + X_{(n/2)+1})/2$ (i.e., the midpoint between the $n/2$ and $n/2+1$).

Method Detection Limit (MDL)
MDL is the minimum concentration of a substance that can be measured and reported with 99 percent confidence that the analyte concentration is greater than zero, as defined in 40 CFR Part 136, Attachment B, revised as of 3 July 1999.

Minimum Level (ML)
ML is the concentration at which the entire analytical system must give a recognizable signal and acceptable calibration point. The ML is the concentration in a sample that is equivalent to the concentration of the lowest calibration standard analyzed by a specific analytical procedure, assuming that all the method specified sample weights, volumes, and processing steps have been followed.

Mixing Zone
Mixing Zone is a limited volume of receiving water that is allocated for mixing with a wastewater discharge where water quality criteria can be exceeded without causing adverse effects to the overall water body.

Not Detected (ND)
Sample results which are less than the laboratory's MDL.

Ocean Waters
The territorial marine waters of the State as defined by California law to the extent these waters are outside of enclosed bays, estuaries, and coastal lagoons. Discharges to ocean waters are regulated in accordance with the State Water Board's California Ocean Plan.

Persistent Pollutants
Persistent pollutants are substances for which degradation or decomposition in the environment is nonexistent or very slow.

Pollutant Minimization Program (PMP)
PMP means waste minimization and pollution prevention actions that include, but are not limited to, product substitution, waste stream recycling, alternative waste management methods, and education of the public and businesses. The goal of the PMP shall be to reduce all potential sources of a priority pollutant(s) through pollutant minimization (control) strategies, including pollution prevention measures as appropriate, to maintain the effluent concentration at or below the water quality-based effluent limitation. Pollution prevention measures may be particularly appropriate for persistent bioaccumulative priority pollutants where there is evidence that beneficial uses are being impacted. The Central Valley Water Board may consider cost effectiveness when establishing the requirements of a PMP. The completion and implementation of a Pollution Prevention Plan, if required pursuant to Water Code section 13263.3(d), shall be considered to fulfill the PMP requirements.

Pollution Prevention
Pollution Prevention means any action that causes a net reduction in the use or generation of a hazardous substance or other pollutant that is discharged into water and includes, but is not limited to, input change, operational improvement, production process change, and product reformulation (as defined in Water Code section 13263.3). Pollution prevention does not include actions that merely shift a pollutant in wastewater from one environmental medium to another environmental medium, unless clear environmental benefits of such an approach are identified to the satisfaction of the State or Regional Water Board.

Reporting Level (RL)
The RL is based on the proper application of method-based analytical procedures for sample preparation and the absence of any matrix interferences. Other factors may be applied to the RL depending on the specific sample preparation steps employed. For example, the treatment typically applied in cases where there are matrix-effects is to dilute the sample or sample aliquot by a factor of ten. In such cases, this additional factor must be applied in the computation of the RL.

Residual Sludge
Sludge that will not be subject to further treatment at the Facility.

Satellite Collection System
The portion, if any, of a sanitary sewer system owned or operated by a different public agency than the agency that owns and operates the wastewater treatment facility that a sanitary sewer system is tributary to.

Source of Drinking Water
Any water designated as municipal or domestic supply (MUN) in a Regional Water Board Basin Plan.

Standard Deviation (σ)
Standard Deviation is a measure of variability that is calculated as follows:

$$\sigma = (\sum[(x - \mu)^2]/(n - 1))^{0.5}$$

where:

x is the observed value;
μ is the arithmetic mean of the observed values; and
n is the number of samples.

Sludge
The solid, semisolid, and liquid residues removed during primary, secondary, or advanced wastewater treatment processes.

Solid Waste
Grit and screening material generated during preliminary treatment.

Toxicity Reduction Evaluation (TRE)
TRE is a study conducted in a step-wise process designed to identify the causative agents of effluent or ambient toxicity, isolate the sources of toxicity, evaluate the effectiveness of toxicity control options, and then confirm the reduction in toxicity. The first steps of the TRE consist of the collection of data relevant to the toxicity, including additional toxicity testing, and an evaluation of facility operations and maintenance practices, and best management practices. A Toxicity Identification Evaluation (TIE) may be required as part of the TRE, if appropriate. (A TIE is a set of procedures to identify the specific chemical(s) responsible for toxicity. These procedures are performed in three phases (characterization, identification, and confirmation) using aquatic organism toxicity tests.)

Toxicity Test
The procedure using living organisms to determine whether a chemical or an effluent is toxic. A toxicity test measures the degree of the effect of a specific chemical or effluent on exposed test organisms.

Toxicity Unit
The measure of toxicity in an effluent as determined by the acute toxic units (TU_a) or chronic toxic units (TU_c) measured. The larger the TU, the greater the toxicity.

ATTACHMENT B – MAP

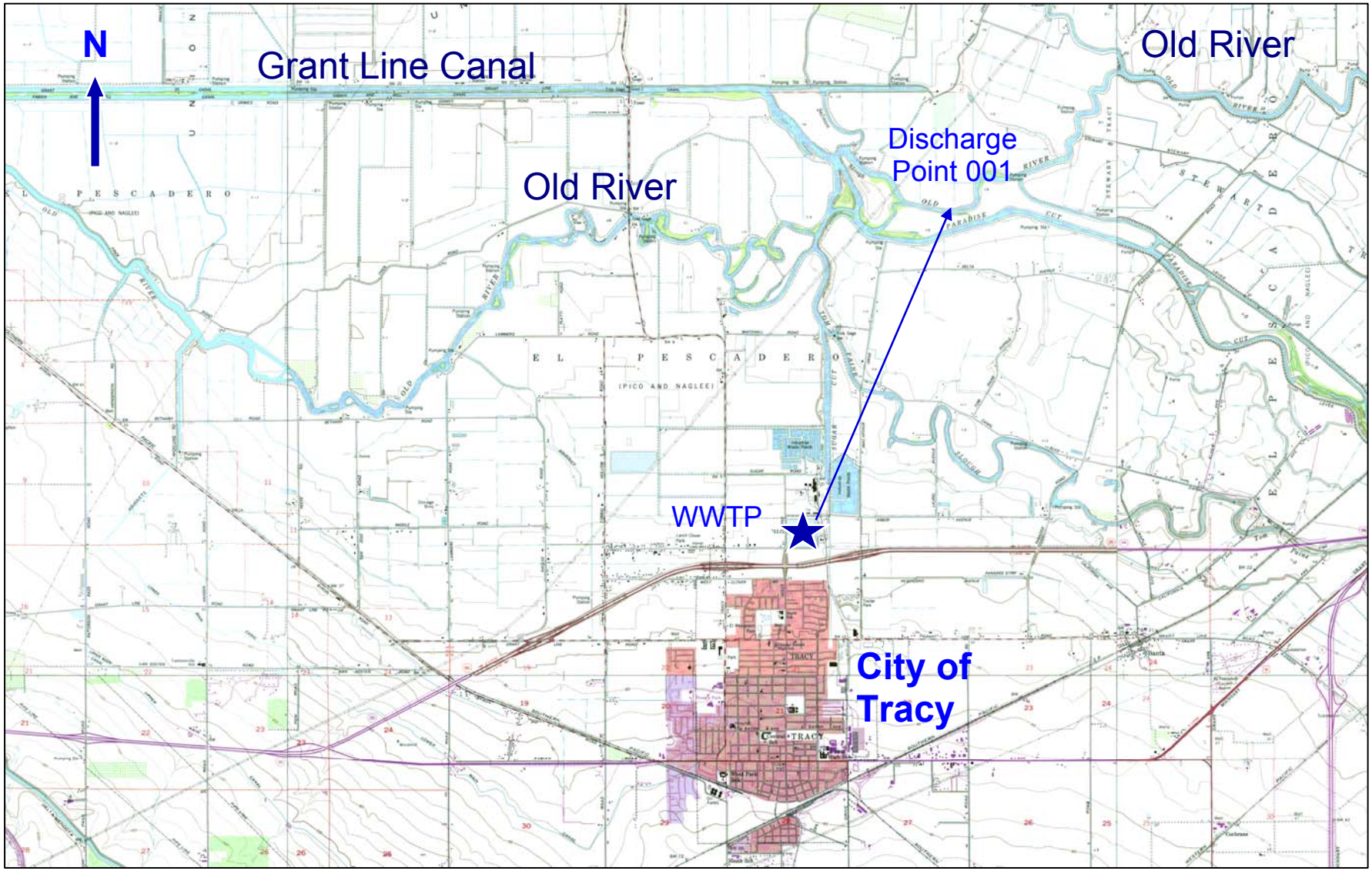

ATTACHMENT C – FLOW SCHEMATICS

MAIN WASTEWATER TREATMENT FACILITY

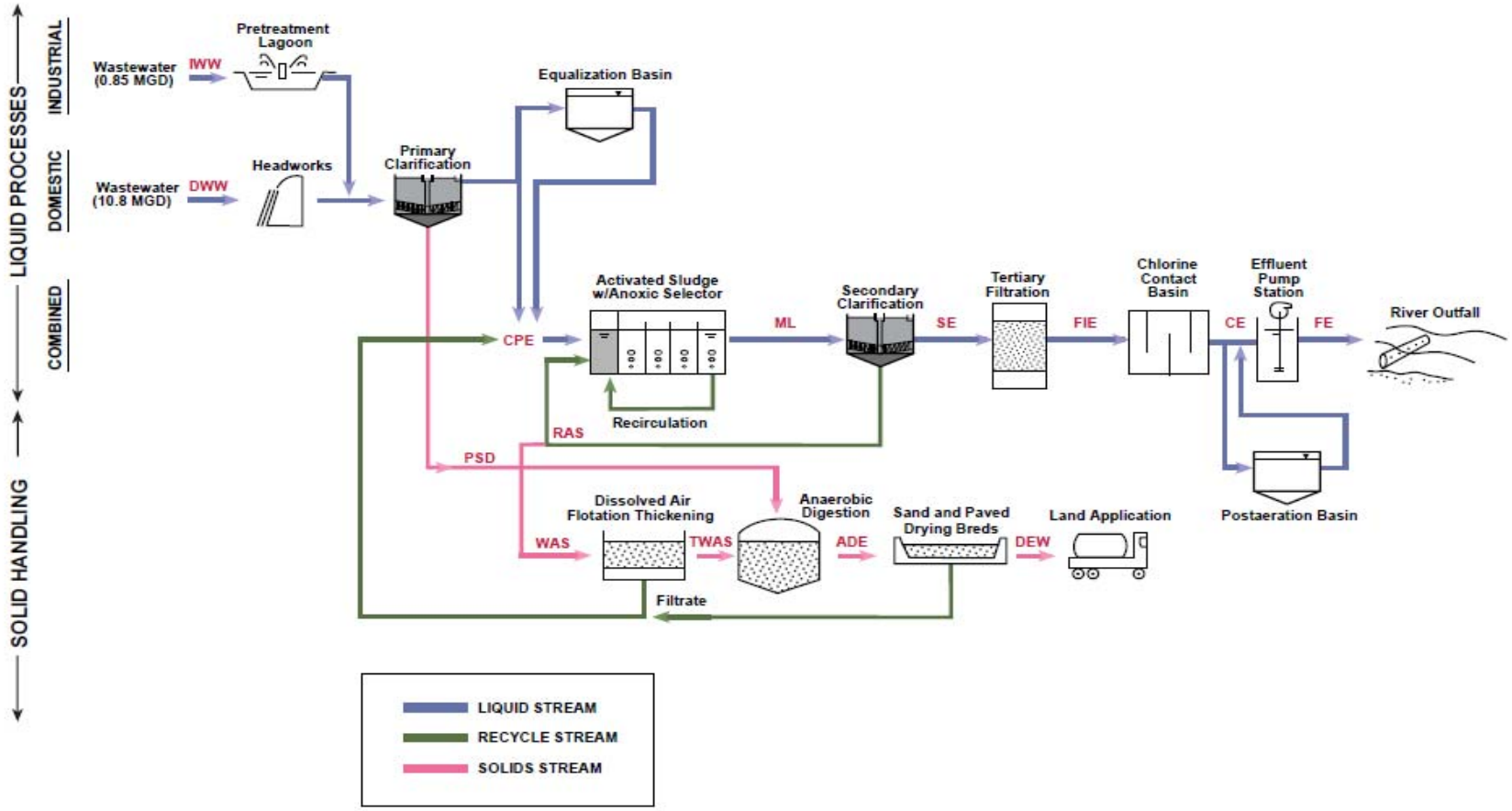

INDUSTRIAL WASTEWATER FACILITY

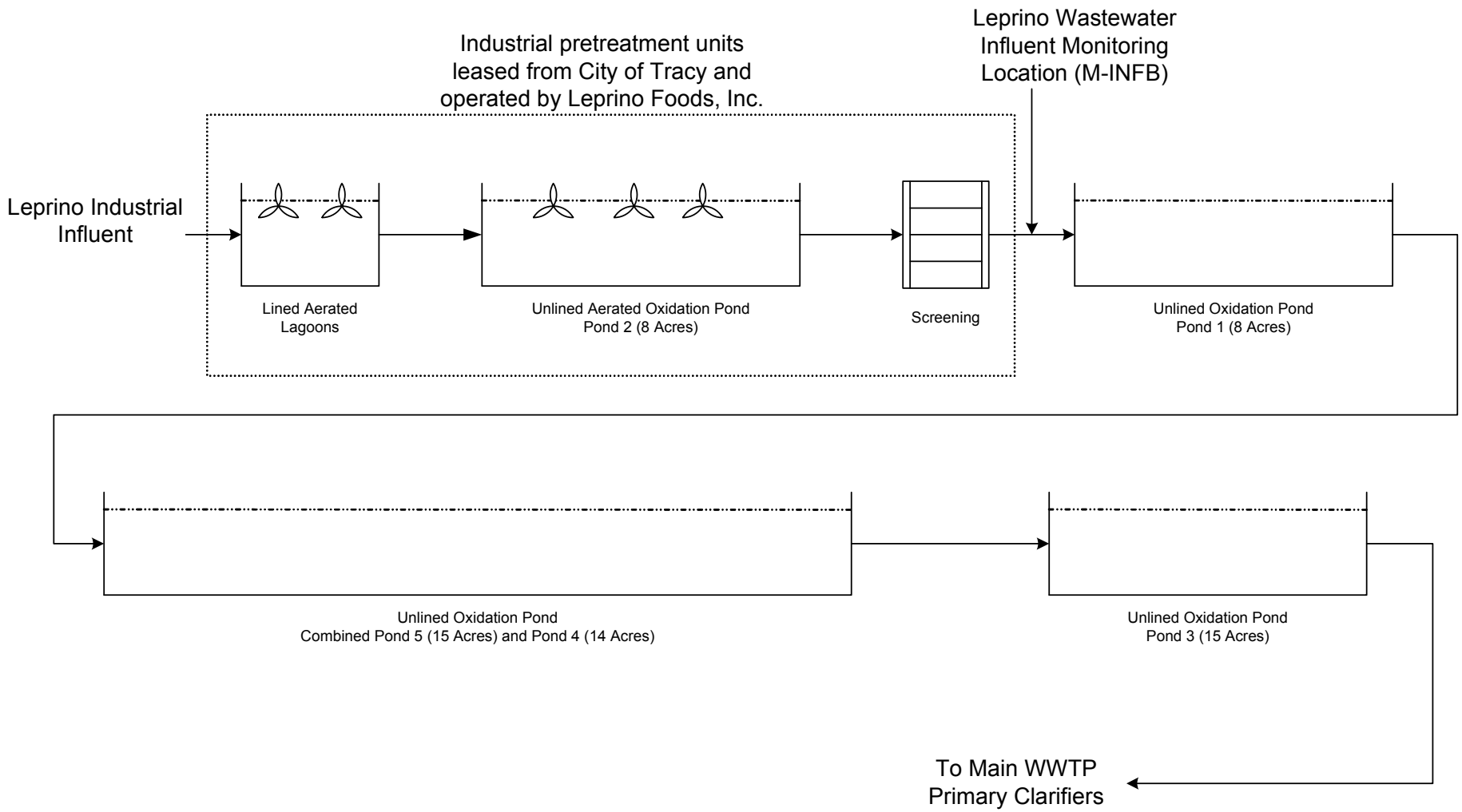

ATTACHMENT D – STANDARD PROVISIONS

I. STANDARD PROVISIONS – PERMIT COMPLIANCE

A. Duty to Comply

1. The Discharger must comply with all of the conditions of this Order. Any noncompliance constitutes a violation of the Clean Water Act (CWA) and the California Water Code (Water Code) and is grounds for enforcement action, for permit termination, revocation and reissuance, or modification; or denial of a permit renewal application. (40 CFR 122.41(a).)

2. The Discharger shall comply with effluent standards or prohibitions established under section 307(a) of the CWA for toxic pollutants and with standards for sewage sludge use or disposal established under section 405(d) of the CWA within the time provided in the regulations that establish these standards or prohibitions, even if this Order has not yet been modified to incorporate the requirement. (40 CFR 122.41(a)(1).)

B. Need to Halt or Reduce Activity Not a Defense

It shall not be a defense for a Discharger in an enforcement action that it would have been necessary to halt or reduce the permitted activity in order to maintain compliance with the conditions of this Order. (40 CFR 122.41(c))

C. Duty to Mitigate

The Discharger shall take all reasonable steps to minimize or prevent any discharge or sludge use or disposal in violation of this Order that has a reasonable likelihood of adversely affecting human health or the environment. (40 CFR 122.41(d))

D. Proper Operation and Maintenance

The Discharger shall at all times properly operate and maintain all facilities and systems of treatment and control (and related appurtenances) which are installed or used by the Discharger to achieve compliance with the conditions of this Order. Proper operation and maintenance also includes adequate laboratory controls and appropriate quality assurance procedures. This provision requires the operation of backup or auxiliary facilities or similar systems that are installed by a Discharger only when necessary to achieve compliance with the conditions of this Order. (40 CFR 122.41(e).)

E. Property Rights

1. This Order does not convey any property rights of any sort or any exclusive privileges. (40 CFR 122.41(g))

2. The issuance of this Order does not authorize any injury to persons or property or invasion of other private rights, or any infringement of state or local law or regulations. (40 CFR 122.5(c))

F. Inspection and Entry

The Discharger shall allow the Regional Water Board, State Water Board, United States Environmental Protection Agency (USEPA), and/or their authorized representatives (including an authorized contractor acting as their representative), upon the presentation of credentials and other documents, as may be required by law, to (40 CFR 122.41(i); Water Code section 13383):

1. Enter upon the Discharger's premises where a regulated facility or activity is located or conducted, or where records are kept under the conditions of this Order (40 CFR 122.41(i)(1));

2. Have access to and copy, at reasonable times, any records that must be kept under the conditions of this Order (40 CFR 122.41(i)(2));

3. Inspect and photograph, at reasonable times, any facilities, equipment (including monitoring and control equipment), practices, or operations regulated or required under this Order (40 CFR 122.41(i)(3)); and

4. Sample or monitor, at reasonable times, for the purposes of assuring Order compliance or as otherwise authorized by the CWA or the Water Code, any substances or parameters at any location. (40 CFR 122.41(i)(4))

G. Bypass

1. Definitions

   a. “Bypass” means the intentional diversion of waste streams from any portion of a treatment facility. (40 CFR 122.41(m)(1)(i))

   b. “Severe property damage” means substantial physical damage to property, damage to the treatment facilities, which causes them to become inoperable, or substantial and permanent loss of natural resources that can reasonably be expected to occur in the absence of a bypass. Severe property damage does not mean economic loss caused by delays in production. (40 CFR 122.41(m)(1)(ii))

2. Bypass not exceeding limitations. The Discharger may allow any bypass to occur which does not cause exceedances of effluent limitations, but only if it is for essential maintenance to assure efficient operation. These bypasses are not subject to the provisions listed in Standard Provisions – Permit Compliance I.G.3, I.G.4, and I.G.5 below. (40 CFR 122.41(m)(2))

3. Prohibition of bypass. Bypass is prohibited, and the Regional Water Board may take enforcement action against a Discharger for bypass, unless (40 CFR 122.41(m)(4)(i)):

a. Bypass was unavoidable to prevent loss of life, personal injury, or severe property damage (40 CFR 122.41(m)(4)(i)(A));

b. There were no feasible alternatives to the bypass, such as the use of auxiliary treatment facilities, retention of untreated wastes, or maintenance during normal periods of equipment downtime. This condition is not satisfied if adequate back-up equipment should have been installed in the exercise of reasonable engineering judgment to prevent a bypass that occurred during normal periods of equipment downtime or preventive maintenance (40 CFR 122.41(m)(4)(i)(B)); and

c. The Discharger submitted notice to the Regional Water Board as required under Standard Provisions – Permit Compliance I.G.5 below. (40 CFR 122.41(m)(4)(i)(C))

4. The Regional Water Board may approve an anticipated bypass, after considering its adverse effects, if the Regional Water Board determines that it will meet the three conditions listed in Standard Provisions – Permit Compliance I.G.3 above. (40 CFR 122.41(m)(4)(ii))

5. Notice

a. Anticipated bypass. If the Discharger knows in advance of the need for a bypass, it shall submit a notice, if possible at least 10 days before the date of the bypass. (40 CFR 122.41(m)(3)(i))

b. Unanticipated bypass. The Discharger shall submit notice of an unanticipated bypass as required in Standard Provisions - Reporting V.E below (24-hour notice). (40 CFR 122.41(m)(3)(ii))

H. Upset

Upset means an exceptional incident in which there is unintentional and temporary noncompliance with technology based permit effluent limitations because of factors beyond the reasonable control of the Discharger. An upset does not include noncompliance to the extent caused by operational error, improperly designed treatment facilities, inadequate treatment facilities, lack of preventive maintenance, or careless or improper operation. (40 CFR 122.41(n)(1))

1. Effect of an upset. An upset constitutes an affirmative defense to an action brought for noncompliance with such technology based permit effluent limitations if the requirements of Standard Provisions – Permit Compliance I.H.2 below are met. No determination made during administrative review of claims that noncompliance

was caused by upset, and before an action for noncompliance, is final administrative action subject to judicial review. (40 CFR 122.41(n)(2))

2. Conditions necessary for a demonstration of upset. A Discharger who wishes to establish the affirmative defense of upset shall demonstrate, through properly signed, contemporaneous operating logs or other relevant evidence that (40 CFR 122.41(n)(3)):

a. An upset occurred and that the Discharger can identify the cause(s) of the upset (40 CFR 122.41(n)(3)(i));

b. The permitted facility was, at the time, being properly operated (40 CFR 122.41(n)(3)(ii));

c. The Discharger submitted notice of the upset as required in Standard Provisions – Reporting V.E.2.b below (24-hour notice) (40 CFR 122.41(n)(3)(iii)); and

d. The Discharger complied with any remedial measures required under Standard Provisions – Permit Compliance I.C above. (40 CFR 122.41(n)(3)(iv))

3. Burden of proof. In any enforcement proceeding, the Discharger seeking to establish the occurrence of an upset has the burden of proof. (40 CFR 122.41(n)(4))

II. STANDARD PROVISIONS – PERMIT ACTION

A. General

This Order may be modified, revoked and reissued, or terminated for cause. The filing of a request by the Discharger for modification, revocation and reissuance, or termination, or a notification of planned changes or anticipated noncompliance does not stay any Order condition. (40 CFR 122.41(f))

B. Duty to Reapply

If the Discharger wishes to continue an activity regulated by this Order after the expiration date of this Order, the Discharger must apply for and obtain a new permit. (40 CFR 122.41(b))

C. Transfers

This Order is not transferable to any person except after notice to the Regional Water Board. The Regional Water Board may require modification or revocation and reissuance of the Order to change the name of the Discharger and incorporate such other requirements as may be necessary under the CWA and the Water Code. (40 CFR 122.41(l)(3) and 122.61)

III. STANDARD PROVISIONS – MONITORING

A. Samples and measurements taken for the purpose of monitoring shall be representative of the monitored activity. (40 CFR 122.41(j)(1))

B. Monitoring results must be conducted according to test procedures under 40 CFR Part 136 or, in the case of sludge use or disposal, approved under 40 CFR Part 136 unless otherwise specified in 40 CFR Part 503 unless other test procedures have been specified in this Order. (40 CFR 122.41(j)(4) and 122.44(i)(1)(iv))

IV. STANDARD PROVISIONS – RECORDS

A. Except for records of monitoring information required by this Order related to the Discharger's sewage sludge use and disposal activities, which shall be retained for a period of at least 5 years (or longer as required by 40 CFR Part 503), the Discharger shall retain records of all monitoring information, including all calibration and maintenance records and all original strip chart recordings for continuous monitoring instrumentation, copies of all reports required by this Order, and records of all data used to complete the application for this Order, for a period of at least three (3) years from the date of the sample, measurement, report or application. This period may be extended by request of the Regional Water Board Executive Officer at any time. (40 CFR 122.41(j)(2))

B. Records of monitoring information shall include:

1. The date, exact place, and time of sampling or measurements (40 CFR 122.41(j)(3)(i));

2. The individual(s) who performed the sampling or measurements (40 CFR 122.41(j)(3)(ii));

3. The date(s) analyses were performed (40 CFR 122.41(j)(3)(iii));

4. The individual(s) who performed the analyses (40 CFR 122.41(j)(3)(iv));

5. The analytical techniques or methods used (40 CFR 122.41(j)(3)(v)); and

6. The results of such analyses. (40 CFR 122.41(j)(3)(vi))

C. Claims of confidentiality for the following information will be denied (40 CFR 122.7(b)):

1. The name and address of any permit applicant or Discharger (40 CFR 122.7(b)(1)); and

2. Permit applications and attachments, permits and effluent data. (40 CFR 122.7(b)(2))

V. STANDARD PROVISIONS – REPORTING

A. Duty to Provide Information

The Discharger shall furnish to the Regional Water Board, State Water Board, or USEPA within a reasonable time, any information which the Regional Water Board, State Water Board, or USEPA may request to determine whether cause exists for modifying, revoking and reissuing, or terminating this Order or to determine compliance with this Order. Upon request, the Discharger shall also furnish to the Regional Water Board, State Water Board, or USEPA copies of records required to be kept by this Order. (40 CFR 122.41(h); Wat. Code, § 13267)

B. Signatory and Certification Requirements

1. All applications, reports, or information submitted to the Regional Water Board, State Water Board, and/or USEPA shall be signed and certified in accordance with Standard Provisions – Reporting V.B.2, V.B.3, V.B.4, and V.B.5 below. (40 CFR 122.41(k))

2. All permit applications shall be signed by either a principal executive officer or ranking elected official. For purposes of this provision, a principal executive officer of a federal agency includes: (i) the chief executive officer of the agency, or (ii) a senior executive officer having responsibility for the overall operations of a principal geographic unit of the agency (e.g., Regional Administrators of USEPA). (40 CFR 122.22(a)(3))

3. All reports required by this Order and other information requested by the Regional Water Board, State Water Board, or USEPA shall be signed by a person described in Standard Provisions – Reporting V.B.2 above, or by a duly authorized representative of that person. A person is a duly authorized representative only if:

a. The authorization is made in writing by a person described in Standard Provisions – Reporting V.B.2 above (40 CFR 122.22(b)(1));

b. The authorization specifies either an individual or a position having responsibility for the overall operation of the regulated facility or activity such as the position of plant manager, operator of a well or a well field, superintendent, position of equivalent responsibility, or an individual or position having overall responsibility for environmental matters for the company. (A duly authorized representative may thus be either a named individual or any individual occupying a named position.) (40 CFR 122.22(b)(2)); and

c. The written authorization is submitted to the Regional Water Board and State Water Board. (40 CFR 122.22(b)(3))

4. If an authorization under Standard Provisions – Reporting V.B.3 above is no longer accurate because a different individual or position has responsibility for the overall operation of the facility, a new authorization satisfying the requirements of

Standard Provisions – Reporting V.B.3 above must be submitted to the Regional Water Board and State Water Board prior to or together with any reports, information, or applications, to be signed by an authorized representative. (40 CFR 122.22(c))

5. Any person signing a document under Standard Provisions – Reporting V.B.2 or V.B.3 above shall make the following certification:

"*I certify under penalty of law that this document and all attachments were prepared under my direction or supervision in accordance with a system designed to assure that qualified personnel properly gather and evaluate the information submitted. Based on my inquiry of the person or persons who manage the system or those persons directly responsible for gathering the information, the information submitted is, to the best of my knowledge and belief, true, accurate, and complete. I am aware that there are significant penalties for submitting false information, including the possibility of fine and imprisonment for knowing violations.*" (40 CFR 122.22(d))

C. Monitoring Reports

1. Monitoring results shall be reported at the intervals specified in the Monitoring and Reporting Program (Attachment E) in this Order. (40 CFR 122.22(l)(4))

2. Monitoring results must be reported on a Discharge Monitoring Report (DMR) form or forms provided or specified by the Regional Water Board or State Water Board for reporting results of monitoring of sludge use or disposal practices. (40 CFR 122.41(l)(4)(i))

3. If the Discharger monitors any pollutant more frequently than required by this Order using test procedures approved under 40 CFR Part 136 or, in the case of sludge use or disposal, approved under 40 CFR Part 136 unless otherwise specified in 40 CFR Part 503, or as specified in this Order, the results of this monitoring shall be included in the calculation and reporting of the data submitted in the DMR or sludge reporting form specified by the Regional Water Board. (40 CFR 122.41(l)(4)(ii))

4. Calculations for all limitations, which require averaging of measurements, shall utilize an arithmetic mean unless otherwise specified in this Order. (40 CFR 122.41(l)(4)(iii))

D. Compliance Schedules

Reports of compliance or noncompliance with, or any progress reports on, interim and final requirements contained in any compliance schedule of this Order, shall be submitted no later than 14 days following each schedule date. (40 CFR 122.41(l)(5))

E. Twenty-Four Hour Reporting

1. The Discharger shall notify the Office of Emergency Services of any noncompliance that may endanger health or the environment within two (2) hours from the time the Discharger becomes aware of the circumstances. The Discharger shall notify the Central Valley Water Board of the noncompliance by telephone or fax within 24 hours from the time the Discharger becomes aware of the circumstances. A written submission shall also be provided to the Central Valley Water Board within five (5) days of the time the Discharger becomes aware of the circumstances. The written submission shall contain a description of the noncompliance and its cause; the period of noncompliance, including exact dates and times, and if the noncompliance has not been corrected, the anticipated time it is expected to continue; and steps taken or planned to reduce, eliminate, and prevent reoccurrence of the noncompliance. (40 CFR 122.41(l)(6)(i))

2. The following shall be included as information that must be reported within 24 hours under this paragraph (40 CFR 122.41(l)(6)(ii)):

   a. Any unanticipated bypass that exceeds any effluent limitation in this Order. (40 CFR 122.41(l)(6)(ii)(A))

   b. Any upset that exceeds any effluent limitation in this Order. (40 CFR 122.41(l)(6)(ii)(B))

3. The Regional Water Board may waive the above-required written report under this provision on a case-by-case basis if an oral report has been received within 24 hours. (40 CFR 122.41(l)(6)(iii))

F. Planned Changes

The Discharger shall give notice to the Regional Water Board as soon as possible of any planned physical alterations or additions to the permitted facility. Notice is required under this provision only when (40 CFR 122.41(l)(1)):

1. The alteration or addition to a permitted facility may meet one of the criteria for determining whether a facility is a new source in 40 CFR 122.29(b) (40 CFR 122.41(l)(1)(i)); or

2. The alteration or addition could significantly change the nature or increase the quantity of pollutants discharged. This notification applies to pollutants that are not subject to effluent limitations in this Order. (40 CFR 122.41(l)(1)(ii))

   The alteration or addition could significantly change the nature or increase the quantity of pollutants discharged. This notification applies to pollutants that are subject neither to effluent limitations in this Order nor to notification requirements under 40 CFR 122.42(a)(1) (see Additional Provisions—Notification Levels VII.A.1). (40 CFR 122.41(l)(1)(ii))

G. Anticipated Noncompliance

The Discharger shall give advance notice to the Regional Water Board or State Water Board of any planned changes in the permitted facility or activity that may result in noncompliance with General Order requirements. (40 CFR 122.41(l)(2))

H. Other Noncompliance

The Discharger shall report all instances of noncompliance not reported under Standard Provisions – Reporting V.C, V.D, and V.E above at the time monitoring reports are submitted. The reports shall contain the information listed in Standard Provision – Reporting V.E above. (40 CFR 122.41(l)(7))

I. Other Information

When the Discharger becomes aware that it failed to submit any relevant facts in a permit application, or submitted incorrect information in a permit application or in any report to the Regional Water Board, State Water Board, or USEPA, the Discharger shall promptly submit such facts or information. (40 CFR 122.41(l)(8))

VI. STANDARD PROVISIONS – ENFORCEMENT

A. The Regional Water Board is authorized to enforce the terms of this permit under several provisions of the Water Code, including, but not limited to, sections 13385, 13386, and 13387.

VII. ADDITIONAL PROVISIONS – NOTIFICATION LEVELS

A. Publicly-Owned Treatment Works (POTWs)

All POTWs shall provide adequate notice to the Regional Water Board of the following (40 CFR 122.42(b)):

1. Any new introduction of pollutants into the POTW from an indirect discharger that would be subject to sections 301 or 306 of the CWA if it were directly discharging those pollutants (40 CFR 122.42(b)(1)); and

2. Any substantial change in the volume or character of pollutants being introduced into that POTW by a source introducing pollutants into the POTW at the time of adoption of the Order. (40 CFR 122.42(b)(2))

3. Adequate notice shall include information on the quality and quantity of effluent introduced into the POTW as well as any anticipated impact of the change on the quantity or quality of effluent to be discharged from the POTW. (40 CFR 122.42(b)(3))

ATTACHMENT E – MONITORING AND REPORTING PROGRAM

Table of Contents

I. General Monitoring Provisions E-2
II. Monitoring Locations E-3
III. Influent Monitoring Requirements E-6
  A. Monitoring Locations INF-001 and INF-002 ..... E-6
IV. Effluent Monitoring Requirements E-7
  A. Monitoring Location EFF-001 ..... E-7
V. Whole Effluent Toxicity Testing Requirements E-8
VI. Land Discharge Monitoring Requirements (Set forth in Order R5-2007-0038) E-11
VII. Reclamation Monitoring Requirements (NOT APPLICABLE) E-11
VIII. Receiving Water Monitoring Requirements – Surface Water and Groundwater E-12
  A. Monitoring Location RSW-001, RSW-002, RSW-003, and RSW-004 ..... E-12
IX. Other Monitoring Requirements E-13
  A. Municipal Water Supply E-13
  B. Tertiary Filtration E-13
X. Reporting Requirements E-14
  A. General Monitoring and Reporting Requirements E-14
  B. Self Monitoring Reports (SMRs) E-14
  C. Discharge Monitoring Reports (DMRs) E-18
  D. Other Reports E-19

List of Tables

Table E-1. Monitoring Station Locations E-3
Table E-2a. Influent Monitoring E-6
Table E-2b. Influent Monitoring E-6
Table E-3. Effluent Monitoring E-7
Table E-4. Chronic Toxicity Testing Dilution Series E-10
Table E-5. Receiving Water Monitoring Requirements E-12
Table E-6. Municipal Water Supply Monitoring Requirements E-13
Table E-7. Disinfection System Monitoring E-13
Table E-8. Monitoring Periods and Reporting Schedule E-14
Table E-9. Reporting Requirements for Special Provisions Reports E-19

ATTACHMENT E – MONITORING AND REPORTING PROGRAM

Title 40 of the Code of Federal Regulations (CFR), section 122.48 (40 CFR 122.48) requires that all NPDES permits specify monitoring and reporting requirements. California Water Code (Water Code) sections 13267 and 13383 also authorize the Regional Water Quality Control Board, Central Valley Region (Central Valley Water Board) to require technical and monitoring reports. This Monitoring and Reporting Program establishes monitoring and reporting requirements, which implement the federal and California regulations.

I. GENERAL MONITORING PROVISIONS

A. Samples and measurements taken as required herein shall be representative of the volume and nature of the monitored discharge. All samples shall be taken at the monitoring locations specified below and, unless otherwise specified, before the monitored flow joins or is diluted by any other waste stream, body of water, or substance. Monitoring locations shall not be changed without notification to and the approval of the Central Valley Water Board.

B. Effluent samples shall be taken downstream of the last addition of wastes to the treatment or discharge works where a representative sample may be obtained prior to mixing with the receiving waters. Samples shall be collected at such a point and in such a manner to ensure a representative sample of the discharge.

C. Chemical, bacteriological, and bioassay analyses of any material required by this Order shall be conducted by a laboratory certified for such analyses by the Department of Public Health (DPH). Laboratories that perform sample analyses must be identified in all monitoring reports submitted to the Central Valley Water Board. In the event a certified laboratory is not available to the Discharger for any onsite field measurements such as pH, DO, turbidity, temperature, and residual chlorine, such analyses performed by a noncertified laboratory will be accepted provided that the analysis is in accordance with 40 CFR 136 or an USEPA approved alternative test procedure, and a Quality Assurance-Quality Control Program is instituted by the laboratory. A manual containing the steps followed in this program for any onsite field measurements such as pH, DO, turbidity, temperature, and residual chlorine must be kept onsite in the treatment facility laboratory and shall be available for inspection by Central Valley Water Board staff. The Discharger must demonstrate sufficient capability (qualified and trained employees, properly calibrated and maintained field instruments, etc.) to adequately perform these field measurements. The Quality Assurance-Quality Control Program must conform to USEPA guidelines or to procedures approved by the Central Valley Water Board.

D. Appropriate flow measurement devices and methods consistent with accepted scientific practices shall be selected and used to ensure the accuracy and reliability of measurements of the volume of monitored discharges. All monitoring instruments and devices used by the Discharger to fulfill the prescribed monitoring program shall be properly maintained and calibrated as necessary, at least yearly, to ensure their

continued accuracy. All flow measurement devices shall be calibrated at least once per year to ensure continued accuracy of the devices.

E. Monitoring results, including noncompliance, shall be reported at intervals and in a manner specified in this Monitoring and Reporting Program.

F. Laboratories analyzing monitoring samples shall be certified by DPH, in accordance with the provision of CWC section 13176, and must include quality assurance/quality control data with their reports.

G. The Discharger shall conduct analysis on any sample provided by USEPA as part of the Discharge Monitoring Quality Assurance (DMQA) program. The results of any such analysis shall be submitted to USEPA's DMQA manager.

H. The Discharger shall file with the Central Valley Water Board technical reports on self-monitoring performed according to the detailed specifications contained in this Monitoring and Reporting Program.

I. The results of all monitoring required by this Order shall be reported to the Central Valley Water Board, and shall be submitted in such a format as to allow direct comparison with the limitations and requirements of this Order. Unless otherwise specified, discharge flows shall be reported in terms of the monthly average and the daily maximum discharge flows.

II. MONITORING LOCATIONS

The Discharger shall establish the following monitoring locations to demonstrate compliance with the effluent limitations, discharge specifications, and other requirements in this Order:

Table E-1. Monitoring Station Locations

Discharge Point Name	Monitoring Location Name	Monitoring Location Description[1]
--	INF-001	Domestic Influent to Facility
--	INF-002	Leprino Foods Company Influent as measured at influent to Treatment Pond 1 (see Attachment C, Figure C-2).
001, 002[2]	EFF-001	Effluent discharged through Outfall 001 and Outfall 002*, measured at final effluent pump station
--	RSW-001	Old River, approximately 1 mile upstream of Outfall 001, downstream of confluence with Middle River (37.8218ºN, 121.3735ºW) see Figure E-1
--	RSW-002	Old River, approximately 500 feet upstream of Outfall 001 (37.8057ºN, 121.3992ºW) see Figure E-1a
--	RSW-003	Old River, approximately 500 feet downstream of Outfall 001 (37.8053ºN, 121.4025ºW) see Figure E-1a

Discharge Point Name	Monitoring Location Name	Monitoring Location Description[1]
--	RSW-004[3]	Old River, approximately 500 feet downstream of Outfall 002 (37.8060ºN, 121.4051ºW) see Figure E-1a
--	SPL-001	Municipal Water Supply

[1] Latitude and longitude coordinates are approximate.
[2] Future outfall proposed for Facility expansion.
[3] The Discharger is not required to monitor at R-004 until Discharge Point 002 is operational.

Figure E-1
Receiving Water Monitoring Locations

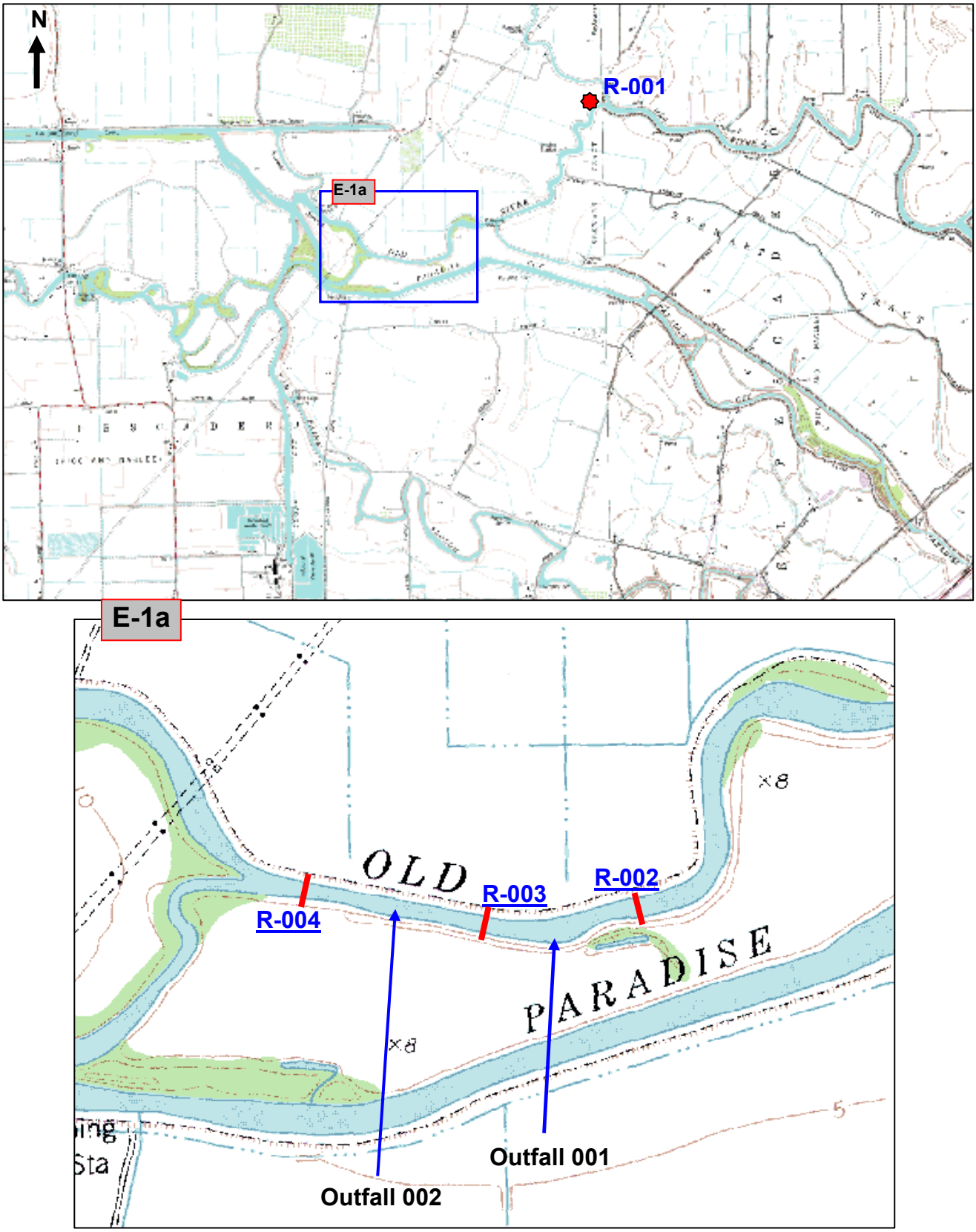

III. INFLUENT MONITORING REQUIREMENTS

A. Monitoring Locations INF-001 and INF-002

1. The Discharger shall monitor domestic influent to the facility at INF-001 as follows. Influent samples shall be collected at approximately the same time as effluent samples and shall be representative of the influent.

Table E-2a. Influent Monitoring

Parameter	Units	Sample Type	Minimum Sampling Frequency	Required Analytical Test Method
Flow	MGD	Meter	Continuous	[1]
pH	Standard Units	Meter	Continuous	[1]
BOD 5-day @ 20°C	mg/L	24-hr Composite [2]	1/Day	[1]
Total Suspended Solids	mg/L	24-hr Composite [2]	1/Day	[1]
Total Dissolved Solids	mg/L	Grab[3]	1/Week	[1]
Electrical Conductivity @ 25°C	µmhos/cm	Grab[3]	1/Week	[1]

[1] Pollutants shall be analyzed using the analytical methods described in 40 CFR Part 136 or an EPA approved Alternate Testing Procedure; where no methods are specified for a given pollutant that meet a specific reporting limit or method performance standard, an alternate method shall be approved by the Central Valley Water Board.
[2] 24-hour flow proportional composite.
[3] Grab samples shall not be collected at the same time each day to get a complete representation of variations in the influent.

2. The Discharger shall monitor Leprino Foods Company influent to the facility at INF-002 as follows. Influent samples shall be collected at approximately the same time as effluent samples and shall be representative of the influent.

Table E-2b. Influent Monitoring

Parameter	Units	Sample Type	Minimum Sampling Frequency	Required Analytical Test Method
Flow	MGD	Meter	Continuous	[1]
pH	Standard Units	Meter	1/Week	[1]
BOD 5-day @ 20°C	mg/L	24-hr Composite [2]	1/Day	[1]
Total Suspended Solids	mg/L	24-hr Composite [2]	1/Day	[1]
Total Dissolved Solids	mg/L	Grab[3]	1/Week	[1]
Electrical Conductivity @ 25°C	µmhos/cm	Grab[3]	1/Week	[1]

[1] Pollutants shall be analyzed using the analytical methods described in 40 CFR Part 136 or an EPA approved Alternate Testing Procedure; where no methods are specified for a given pollutant that meet a specific reporting limit or method performance standard, an alternate method shall be approved by the Central Valley Water Board.
[2] 24-hour flow proportional composite.
[3] Grab samples shall not be collected at the same time each day to get a complete representation of variations in the influent.

IV. EFFLUENT MONITORING REQUIREMENTS

A. Monitoring Location EFF-001

1. The Discharger shall monitor treated effluent that is discharged to Old River at Discharge Point 001 and/or Discharge Point 002 at Monitoring Location EFF-001 as follows. Effluent samples shall be collected downstream from the last connection through which wastes can be admitted into the outfall. Effluent samples should be representative of the volume and quality of the discharge. If more than one analytical test method is listed for a given parameter, the Discharger must select from the listed methods and corresponding Minimum Level:

Table E-3. Effluent Monitoring

Parameter	Units	Sample Type	Minimum Sampling Frequency	Required Analytical Test Method
Discharge Location[14]	--	--	1/Day	--
Flow	mgd	Meter	Continuous	[1]
Biochemical Oxygen Demand (BOD) (5-day @ 20 Deg. C)	mg/L	24-hr Composite [2]	1/Day	[1]
	lbs/day	Calculate	1/Day	--
Total Suspended Solids	mg/L	24-hr Composite [2]	1/Day	[1]
	lbs/day	Calculate	1/Day	--
pH	Standard Units	Meter	Continuous [3]	[1]
Bis (2-ethylhexyl) phthalate[15]	µg/L	Grab	1/Month	[1, 4, 5]
Copper[15]	µg/L	Grab	1/Quarter	
Chlorodibromomethane[15]	µg/L	Grab	1/Month	
Dichlorobromomethane[15]	µg/L	Grab	1/Month	
Ammonia Nitrogen, Total (as N)	mg/L	Grab	1/Week [3, 10]	[1]
Chlorine, Total Residual	mg/L	Meter	Continuous	[1, 9]
Electrical Conductivity @ 25°C	µmhos/cm	Grab	1/Week	[1]
Hardness (as $CaCO_3$)	mg/L	Grab	1/Month [11]	[1]
Lead, Total Recoverable[15]	µg/L	Grab	1/Quarter	[1, 11]
Mercury, Total Recoverable[15]	µg/L	Grab	1/Month	[12]
Mercury, Methyl	µg/L	Grab	1/Month	[12]
Nitrate + Nitrite (as N)	mg/L	Grab	1/Week	[1]
Temperature	°F	Meter	Continuous [3]	[1]
Total Coliform Organisms	MPN/100 mL	Grab	1/Day [13]	[1]
Whole Effluent Toxicity (see Section V. below)	--	--	--	--
Priority Pollutants and Other Constituents of Concern[7, 15]	µg/L	See Attachment I	See Attachment I	See Attachment I

[1] Pollutants shall be analyzed using the analytical methods described in 40 CFR Part 136 or an EPA approved Alternate Testing Procedure; where no methods are specified for a given pollutant that meet a specific reporting limit or method performance standard, an alternate method can be approved by the Central Valley Water Board.

[2] 24-hour flow proportional composite.

[3] pH and temperature shall be recorded at the time of ammonia sample collection.

Parameter	Units	Sample Type	Minimum Sampling Frequency	Required Analytical Test Method

[4] In order to verify if bis (2-ethylhexyl) phthalate is truly present in the effluent discharge, the Discharger shall take steps to assure that sample containers, sampling apparatus, and analytical equipment are not sources of the detected contaminant.

[5] For priority pollutant constituents with effluent limitations, reporting limits shall be below the effluent limitations. If the lowest minimum level (ML) published in Appendix 4 of the Policy for Implementation of Toxics Standards for Inland Surface Waters, Enclosed Bays, and Estuaries of California (State Implementation Plan or SIP) is not below the effluent limitation, the reporting limit shall be the lowest ML. For priority pollutant constituents without effluent limitations, the detection limits shall be equal to or less than the lowest ML published in Appendix 4 of the SIP. Sampling and analysis of Bis (2-ethylhexyl) phthalate shall be conducted using ultra-clean techniques that eliminate the possibility of sample contamination.

[6] Volatile constituents shall be sampled in accordance with 40 CFR Part 136 or by methods approved by the Central Valley Water Board or the State Water Board.

[7] Concurrent with receiving surface water sampling.

[8] Total chlorine residual must be monitored with a method sensitive to and accurate at the permitted level of 0.01 mg/L.

[10] Concurrent with whole effluent toxicity monitoring.

[11] Hardness samples shall be collected concurrently with metals samples.

[12] Unfiltered methyl mercury and total mercury samples shall be taken using clean hands/dirty hands procedures, as described in U.S. EPA method 1669: Sampling Ambient Water for Trace Metals at EPA Water Quality Criteria Levels, for collection of equipment blanks (section 9.4.4.2), and shall be analyzed by U.S. EPA method 1630/1631 (Revision E) with a method detection limit of 0.02 ng/l for methyl mercury and 0.2 ng/l for total mercury.

[13] Samples for Total coliform organisms may be collected at any point following disinfection.

[14] The Discharger shall report daily the discharge location used (i.e., Discharge Point No 001 and/or 002).

[15] The maximum required Reporting Level is specified in Attachment I, Table I-1, Priority Pollutants and Other Constituents of Concern.

V. WHOLE EFFLUENT TOXICITY TESTING REQUIREMENTS

A. Acute Toxicity Testing. The Discharger shall conduct acute toxicity testing to determine whether the effluent is contributing acute toxicity to the receiving water. The Discharger shall meet the following acute toxicity testing requirements:

1. *Monitoring Frequency* – The Discharger shall perform monthly acute toxicity testing, concurrent with effluent ammonia sampling.

2. *Sample Types* – The Discharger may use flow-through, static non-renewal, or static renewal testing. For static non-renewal and static renewal testing, the samples shall be flow proportional 24-hour composites and shall be representative of the volume and quality of the discharge. The effluent samples shall be taken at the effluent monitoring location EFF-001.

3. *Test Species* – Test species shall be rainbow trout (*Oncorhchus mykiss*).

4. *Methods* – The acute toxicity testing samples shall be analyzed using EPA-821-R-02-012, Fifth Edition. Temperature, total residual chlorine, and pH shall be recorded at the time of sample collection. No pH adjustment may be made unless approved by the Executive Officer.

5. *Test Failure* – If an acute toxicity test does not meet all test acceptability criteria, as specified in the test method, the Discharger must re-sample and re-test as soon as possible, not to exceed 7 days following notification of test failure.

B. Chronic Toxicity Testing. The Discharger shall conduct three species chronic toxicity testing to determine whether the effluent is contributing chronic toxicity to the receiving water. The Discharger shall meet the following chronic toxicity testing requirements:

1. *Monitoring Frequency –* The Discharger shall perform quarterly three species chronic toxicity testing.

2. *Sample Types* – Effluent samples shall be flow proportional 24-hour composites and shall be representative of the volume and quality of the discharge. The effluent samples shall be taken at the effluent monitoring location EFF-001. The receiving water control shall be a grab sample obtained from the RSW-001 sampling location, as identified in this Monitoring and Reporting Program.

3. *Sample Volumes* – Adequate sample volumes shall be collected to provide renewal water to complete the test in the event that the discharge is intermittent.

4. *Test Species* – Chronic toxicity testing measures sublethal (e.g., reduced growth, reproduction) and/or lethal effects to test organisms exposed to an effluent compared to that of the control organisms. The Discharger shall conduct chronic toxicity tests with:

   - The cladoceran, water flea, *Ceriodaphnia dubia* (survival and reproduction test);

   - The fathead minnow, *Pimephales promelas* (larval survival and growth test); and

   - The green alga, *Selenastrum capricornutum* (growth test).

5. *Methods* – The presence of chronic toxicity shall be estimated as specified in *Short-term Methods for Estimating the Chronic Toxicity of Effluents and Receiving Waters to Freshwater Organisms, Fourth Edition*, EPA/821-R-02-013, October 2002.

6. *Reference Toxicant* – As required by the SIP, all chronic toxicity tests shall be conducted with concurrent testing with a reference toxicant and shall be reported with the chronic toxicity test results.

7. *Dilutions* – For regular and accelerated chronic toxicity monitoring, it is not necessary to perform the test using a dilution series. The test may be performed using 100% effluent and two controls. For TRE monitoring, the chronic toxicity testing shall be performed using the dilution series identified in Table E-4, below, unless an alternative dilution series is detailed in the submitted TRE Action Plan. The receiving water control shall be used as the diluent, unless use of an

alternative diluent is detailed in the submitted TRE Action Plan, or when the receiving water is toxic.

Table E-4. Chronic Toxicity Testing Dilution Series

Sample	Dilutions (%)					Controls	
	100	75	50	25	12.5	Receiving Water	Laboratory Water
% Effluent	100	75	50	25	12.5	0	0
% Receiving Water	0	25	50	75	87.5	100	0
% Laboratory Water	0	0	0	0	0	0	100

8. *Test Failure* – The Discharger must re-sample and re-test as soon as possible, but no later than fourteen (14) days after receiving notification of a test failure. A test failure is defined as follows:

   a. The reference toxicant test or the effluent test does not meet all test acceptability criteria as specified in the *Short-term Methods for Estimating the Chronic Toxicity of Effluents and Receiving Waters to Freshwater Organisms, Fourth Edition*, EPA/821-R-02-013, October 2002 (Method Manual), and its subsequent amendments or revisions; or

   b. The percent minimum significant difference (PMSD) measured for the test exceeds the upper PMSD bound variability criterion in Table 6 on page 52 of the Method Manual. (A retest is only required in this case if the test results do not exceed the monitoring trigger specified in the Special Provision at section VI. 2.a.iii. of the Order.)

C. WET Testing Notification Requirements. The Discharger shall notify the Central Valley Water Board within 24-hours after the receipt of test results exceeding the monitoring trigger during regular or accelerated monitoring, or an exceedance of the acute toxicity effluent limitation.

D. WET Testing Reporting Requirements. All toxicity test reports shall include the contracting laboratory's complete report provided to the Discharger and shall be in accordance with the appropriate "Report Preparation and Test Review" sections of the method manuals. At a minimum, whole effluent toxicity monitoring shall be reported as follows:

1. **Chronic WET Reporting.** Regular chronic toxicity monitoring results shall be reported to the Central Valley Water Board within 30 days following completion of the test, and shall contain, at minimum:

   a. The results expressed in TUc, measured as 100/NOEC, and also measured as 100/LC50, 100/EC25, 100/IC25, and 100/IC50, as appropriate.

   b. The statistical methods used to calculate endpoints;

c. The statistical output page, which includes the calculation of the percent minimum significant difference (PMSD);

d. The dates of sample collection and initiation of each toxicity test; and

e. The results compared to the numeric toxicity monitoring trigger.

Additionally, the monthly discharger self-monitoring reports shall contain an updated chronology of chronic toxicity test results expressed in TUc, and organized by test species, type of test (survival, growth or reproduction), and monitoring frequency, i.e., either quarterly, monthly, accelerated, or Toxicity Reduction Evaluation (TRE).

2. **Acute WET Reporting.** Acute toxicity test results shall be submitted with the monthly discharger self-monitoring reports and reported as percent survival.

3. **TRE Reporting.** Reports for TREs shall be submitted in accordance with the schedule contained in the Discharger's approved TRE Workplan, or as amended by the Discharger's TRE Action Plan.

4. **Quality Assurance (QA).** The Discharger must provide the following information for QA purposes:

   a. Results of the applicable reference toxicant data with the statistical output page giving the species, NOEC, LOEC, type of toxicant, dilution water used, concentrations used, PMSD, and dates tested.

   b. The reference toxicant control charts for each endpoint, which include summaries of reference toxicant tests performed by the contracting laboratory.

   c. Any information on deviations or problems encountered and how they were dealt with.

VI. LAND DISCHARGE MONITORING REQUIREMENTS (SET FORTH IN ORDER R5-2007-0038)

VII. RECLAMATION MONITORING REQUIREMENTS (NOT APPLICABLE)

VIII. RECEIVING WATER MONITORING REQUIREMENTS – SURFACE WATER AND GROUNDWATER

A. Monitoring Location RSW-001, RSW-002, RSW-003, and RSW-004

1. The Discharger shall monitor Old River at RSW-001, RSW-002, RSW-003, and RSW-004[5] as follows:

Table E-5. Receiving Water Monitoring Requirements

Parameter	Units	Sample Type	Minimum Sampling Frequency	Required Analytical Test Method
Dissolved Oxygen[1]	mg/L	Grab	1/Week	
pH[1]	Standard Units	Grab	1/Week	
Temperature[1]	°F (°C)	Grab	1/Week	
Electrical Conductivity @ 25°C [1]	µmhos/cm	Grab	1/Week	
Ammonia (as N)[1, 2, 3]	mg/L	Grab	1/Week	
Total Phosphorus	mg/L	Grab	1/Quarter	
Total Kjeldahl Nitrogen (as N) [1]	mg/L	Grab	1/Quarter	
Total Organic Carbon[1]	mg/L	Grab	1/Quarter	
Turbidity[1]	NTU	Grab	1/Week	
Hardness as $CaCO_3$[1]	mg/L	Grab	1/Month	
Priority Pollutants and Other Constituents of Concern[4, 6]	µg/L	Grab	See Attachment I	

1 Sampling required at RSW-002, RSW-003, and RSW-004, only.
2 Temperature and pH shall be determined at the time of sample collection.
3 The ammonia method detection limit must be less than or equal to 0.5 mg/L.
4 Sampling required at RSW-001, only.
5 Monitoring at R-004 is not required until the discharge begins at Outfall 002.
6 The maximum required Reporting Level is specified in Attachment I, Table I-1, Priority Pollutants and Other Constituents of Concern.

In conducting the receiving water sampling, a log shall be kept of the receiving water conditions throughout the reach bounded by Stations R-002 and R-004. **River Flow direction shall be reported at time of each sampling event.** Attention shall also be given to the presence or absence of:

a. Floating or suspended matter
b. Discoloration
c. Bottom deposits, if visible
d. Aquatic life
e. Visible films, sheens or coatings
f. Fungi, slimes, or objectionable growths
g. Potential nuisance conditions

Notes on receiving water conditions shall be summarized in the monitoring report.

IX. OTHER MONITORING REQUIREMENTS

A. Municipal Water Supply

1. Monitoring Location SPL-001

The Discharger shall monitor the municipal water supply at SPL-001 as follows. A sampling station shall be established where a representative sample of the municipal water supply can be obtained. Municipal water supply samples shall be collected at approximately the same time as effluent samples.

Table E-6. Municipal Water Supply Monitoring Requirements

Parameter	Units	Sample Type	Minimum Sampling Frequency	Required Analytical Test Method
Total Dissolved Solids[1]	mg/L	Grab	1/Quarter	[2]
Electrical Conductivity @ 25°C[1]	µmhos/cm	Grab	1/Quarter	[2]
Standard Minerals[3]	mg/L	Grab	1/Year	[2]

1 If the water supply is from more than one source, the total dissolved solids and electrical conductivity shall be reported as a weighted average and include copies of supporting calculations.

2 Pollutants shall be analyzed using the analytical methods described in 40 CFR Part 136.

3 Standard minerals shall include all major cations and anions and include verification that the analysis is complete (i.e., cation/anion balance).

B. Tertiary Filtration

1. Tertiary Filtration System Monitoring

The Discharger shall monitor the Tertiary Filtration system at EFF-001 as follows:

Table E-7. Disinfection System Monitoring

Parameter	Units	Sample Type	Minimum Sampling Frequency
Flow	MGD	Meter	Continuous [1]
Turbidity	NTU	Meter [2]	Continuous [1, 3]

1 For continuous analyzers, the Discharger shall report documented routine meter maintenance activities including date, time of day, and duration, in which the analyzer(s) is not in operation.

2 The turbidity meter shall be stationed immediately after the filters.

3 Report daily average turbidity and maximum.

X. REPORTING REQUIREMENTS

A. General Monitoring and Reporting Requirements

1. The Discharger shall comply with all Standard Provisions (Attachment D) related to monitoring, reporting, and recordkeeping.

2. Upon written request of the Central Valley Water Board, the Discharger shall submit a summary monitoring report. The report shall contain both tabular and graphical summaries of the monitoring data obtained during the previous year(s).

3. **Compliance Time Schedules.** For compliance time schedules included in the Order, the Discharger shall submit to the Central Valley Water Board, on or before each compliance due date, the specified document or a written report detailing compliance or noncompliance with the specific date and task. If noncompliance is reported, the Discharger shall state the reasons for noncompliance and include an estimate of the date when the Discharger will be in compliance. The Discharger shall notify the Central Valley Water Board by letter when it returns to compliance with the compliance time schedule.

4. The Discharger shall report to the Central Valley Water Board any toxic chemical release data it reports to the State Emergency Response Commission within 15 days of reporting the data to the Commission pursuant to section 313 of the "*Emergency Planning and Community Right to Know Act*" of 1986.

B. Self Monitoring Reports (SMRs)

1. The Discharger shall submit eSMRs using the State Water Board's CIWQS Program Web site (http:www.waterboards.ca.gov/ciwqs/index.html). The Discharger shall maintain sufficient staffing and resources to ensure it submits eSMRs during the effective duration of this Order. This includes provision of training and supervision of individuals (e.g., Discharger personnel or consultant) on how to prepare and submit eSMRs.

2. Monitoring periods and reporting for all required monitoring shall be completed according to the following schedule:

Table E-8. Monitoring Periods and Reporting Schedule

Sampling Frequency	Monitoring Period Begins On…	Monitoring Period	SMR Due Date
Continuous	Permit effective date	Continuous	Submit with monthly SMR
1/Hour	Permit effective date	Hourly	Submit with monthly SMR
1/Day	Permit effective date	(Midnight through 11:59 PM) or any 24-hour period that reasonably represents a calendar day for purposes of sampling.	Submit with monthly SMR
1/Week	Permit effective date	Sunday through Saturday	Submit with monthly SMR
1/Month	Permit effective date	First day of calendar month through last day of calendar month	First day of second calendar month following month of sampling

Sampling Frequency	Monitoring Period Begins On…	Monitoring Period	SMR Due Date
1/Quarter	Permit effective date	1 January through 31 March 1 April through 30 June 1 July through 30 September 1 October through 31 December	1 May 1 August 1 November 1 February
1/Year	Permit effective date	1 January through 31 December	1 February

3. **Reporting Protocols.** The Discharger shall report with each sample result the applicable Reporting Level (RL) and the current Method Detection Limit (MDL), as determined by the procedure in 40 CFR Part 136.

   The Discharger shall report the results of analytical determinations for the presence of chemical constituents in a sample using the following reporting protocols:

   a. Sample results greater than or equal to the RL shall be reported as measured by the laboratory (i.e., the measured chemical concentration in the sample).

   b. Sample results less than the RL, but greater than or equal to the laboratory's MDL, shall be reported as "Detected, but Not Quantified," or DNQ. The estimated chemical concentration of the sample shall also be reported.

   For the purposes of data collection, the laboratory shall write the estimated chemical concentration next to DNQ as well as the words "Estimated Concentration" (may be shortened to "Est. Conc."). The laboratory may, if such information is available, include numerical estimates of the data quality for the reported result. Numerical estimates of data quality may be percent accuracy (+ a percentage of the reported value), numerical ranges (low to high), or any other means considered appropriate by the laboratory.

   c. Sample results less than the laboratory's MDL shall be reported as "Not Detected," or ND.

   d. Dischargers are to instruct laboratories to establish calibration standards so that the ML value (or its equivalent if there is differential treatment of samples relative to calibration standards) is the lowest calibration standard. At no time is the Discharger to use analytical data derived from extrapolation beyond the lowest point of the calibration curve.

4. **Compliance Determination.** Compliance with effluent limitations for priority pollutants shall be determined using sample reporting protocols defined above and in Attachment A of this Order. For purposes of reporting and administrative enforcement by the Central Valley Water Board and the State Water Board, the Discharger shall be deemed out of compliance with effluent limitations if the concentration of the priority pollutant in the monitoring sample is greater than the effluent limitation and greater than or equal to the reporting level (RL).

5. **Multiple Sample Data.** When determining compliance with an AMEL, AWEL, or MDEL for priority pollutants and more than one sample result is available, the Discharger shall compute the arithmetic mean unless the data set contains one or more reported determinations of "Detected, but Not Quantified" (DNQ) or "Not Detected" (ND). In those cases, the Discharger shall compute the median in place of the arithmetic mean in accordance with the following procedure:

   a. The data set shall be ranked from low to high, ranking the reported ND determinations lowest, DNQ determinations next, followed by quantified values (if any). The order of the individual ND or DNQ determinations is unimportant.

   b. The median value of the data set shall be determined. If the data set has an odd number of data points, then the median is the middle value. If the data set has an even number of data points, then the median is the average of the two values around the middle unless one or both of the points are ND or DNQ, in which case the median value shall be the lower of the two data points where DNQ is lower than a value and ND is lower than DNQ.

6. **Reporting Requirements.** In reporting the monitoring data, the Discharger shall arrange the data in tabular form so that the date, the constituents, and the concentrations are readily discernible.

   a. The data shall be summarized to clearly illustrate whether the facility is operating in compliance with interim and/or final effluent limitations or with other waste discharge requirements (e.g., discharge specifications, receiving water limitations, special provisions, etc.).

   b. Reports must clearly show when discharging to EFF-001 or other permitted discharge locations. Reports must show the date and time that the discharge started and stopped at each location.

   c. The highest daily maximum for the month and monthly and weekly averages shall be determined and recorded as needed to demonstrate compliance.

7. **Calculation Requirements**. The following shall be calculated and reported in the SMRs:

   a. **Mass Loading Limitations**. For BOD_5, TSS, and ammonia, the Discharger shall calculate and report the mass loading (lbs/day) in the SMRs. The mass loading shall be calculated as follows:

   Mass Loading (lbs/day) = Flow (MGD) x Concentration (mg/L) x 8.34

   When calculating daily mass loading, the daily average flow and constituent concentration shall be used. For weekly average mass loading, the weekly average flow and constituent concentration shall be used. For monthly average mass loading, the monthly average flow and constituent concentration shall be used.

b. **Removal Efficiency (BOD_5 and TSS)**. The Discharger shall calculate and report the percent removal of BOD_5 and TSS in the SMRs. The percent removal shall be calculated as specified in Section VII.A. of the Limitations and Discharge Requirements.

c. **Total Coliform Organisms Effluent Limitations.** The Discharger shall calculate and report the 7-day median of total coliform organisms for the effluent. The 7-day median of total coliform organisms shall be calculated as specified in Section VII.C. of the Limitations and Discharge Requirements.

d. **Dissolved Oxygen Receiving Water Limitations.** The Discharger shall calculate and report monthly in the self-monitoring report: i) the dissolved oxygen concentration, ii) the percent of saturation in the main water mass, and iii) the 95th percentile dissolved oxygen concentration.

e. **Turbidity Receiving Water Limitations.** The Discharger shall calculate and report the turbidity increase in the receiving water applicable to the natural turbidity condition specified in Section V.A.17.a-e. of the Limitations and Discharge Requirements. The Discharger shall calculate and report the turbidity change in the receiving water based on the difference in turbidity at RSW-002 and RSW-003. When Discharge Point No. 002 is initiated the calculation shall be based on the difference in turbidity at RSW-002 and RSW-004.

f. **Temperature Receiving Water Limitations.** The Discharger shall calculate and report the temperature increase in the receiving water based on the difference in temperature at RSW-002 and RSW-003. When Discharge Point No. 002 is initiated the calculation shall be based on the difference in temperature at RSW-002 and RSW-004.

g. **Chlorpyrifos and Diazinon Effluent Limitations (Section IV.A.1.l).** The Discharger shall calculate and report the value of S_{AMEL} and S_{MDEL} for the effluent, using the equation in Effluent Limitations IV.A.1.l and consistent with the Compliance Determination language specified in Section VII.K.

h. **Total Calendar Annual Mass Loading Effluent Limitations**. For constituents with effluent limitations specified as “total calendar annual mass loading” (i.e., methylmercury, total dissolved solids and total mercury) the Discharger shall report the total calendar annual mass loading in the December SMR. The total calendar annual mass loading shall be calculated as specified in Section V.B of the Limitations and Discharge Requirements.

8. The Discharger shall submit SMRs in accordance with the following requirements:

a. When electronic submittal of data is required and CIWQS does not provide for entry into a tabular format within the system, the Discharger shall electronically submit the data in a tabular format as an attachment. The Discharger is not

required to duplicate the submittal of data that is entered in a tabular format within CIWQS.

b. The Discharger shall attach a cover letter to the SMR. The information contained in the cover letter shall clearly identify violations of the WDRs; discuss corrective actions taken or planned; and the proposed time schedule for corrective actions. Identified violations must include a description of the requirement that was violated and a description of the violation.

c. SMRs must be submitted to the Central Valley Water Board, signed and certified as required by the Standard Provisions (Attachment D), to the address listed below:

Regional Water Quality Control Board
Central Valley Region
NPDES Compliance and Enforcement Unit
11020 Sun Center Dr., Suite #200
Rancho Cordova, CA 95670-6114

C. Discharge Monitoring Reports (DMRs)

1. As described in section X.B.1 above, at any time during the term of this permit, the State Water Board or Central Valley Water Board may notify the Discharger to electronically submit SMRs that will satisfy federal requirements for submittal of Discharge Monitoring Reports (DMRs). Until such notification is given, the Discharger shall submit DMRs in accordance with the requirements described below.

2. DMRs must be signed and certified as required by the standard provisions (Attachment D). The Discharger shall submit the original DMR and one copy of the DMR to the address listed below:

STANDARD MAIL	FEDEX/UPS/ OTHER PRIVATE CARRIERS
State Water Resources Control Board Division of Water Quality c/o DMR Processing Center PO Box 100 Sacramento, CA 95812-1000	State Water Resources Control Board Division of Water Quality c/o DMR Processing Center 1001 I Street, 15th Floor Sacramento, CA 95814

3. All discharge monitoring results must be reported on the official USEPA pre-printed DMR forms (EPA Form 3320-1). Forms that are self-generated will not be accepted unless they follow the exact same format of EPA Form 3320-1.

D. Other Reports

1. **Special Study Reports and Progress Reports.** As specified in the compliance time schedules required in the Special Provisions contained in section VI of the Order, special study and progress reports shall be submitted in accordance with the following reporting requirements. At minimum, the progress reports shall include a discussion of the status of final compliance, whether the Discharger is on schedule to meet the final compliance date, and the remaining tasks to meet the final compliance date.

Table E-9. Reporting Requirements for Special Provisions Reports

Special Provision	Reporting Requirements
Pollution Prevention Plan for Mercury (Special Provisions VI.C.3.a.)	**1 December**, annually
Salinity Reduction Plan (Special Provisions VI.C.3.c.)	**1 March**, annually

2. The Discharger shall report the results of any special studies, acute and chronic toxicity testing, TRE/TIE, PMP, and Pollution Prevention Plan required by Special Provisions VI.C. of this Order. The Discharger shall report the progress in satisfaction of compliance schedule dates specified in the Special Provision at section VI.C.7 of this Order. The Discharger shall submit reports with the first monthly SMR scheduled to be submitted on or immediately following the report due date.

3. Within 60 days of permit adoption, the Discharger shall submit a report outlining reporting levels, method detection limits, and analytical methods for approval, with a goal to achieve detection levels below applicable water quality criteria. The Discharger shall comply with the monitoring and reporting requirements for CTR constituents as outlined in section 2.3 and 2.4 of the SIP. The maximum required reporting levels for priority pollutant constituents shall be based on the minimum levels contained in Appendix 4 of the SIP, determined in accordance with Section 2.4.3 of the SIP. Table I-1 (Attachment I) provides required maximum reporting levels in accordance with the SIP.

4. The Discharger's sanitary sewer system collects wastewater using sewers, pipes, pumps, and/or other conveyance systems and directs the raw sewage to the wastewater treatment plant. A "sanitary sewer overflow" is defined as a discharge to ground or surface water from the sanitary sewer system at any point upstream of the wastewater treatment plant. All violations must be reported as required in Standard Provisions. Facilities (such as wet wells, regulated impoundments, tanks, highlines, etc.) may be part of a sanitary sewer system and discharges to these facilities are not considered sanitary sewer overflows, provided that the waste is fully contained within these temporary storage facilities.

5. **Effluent and Receiving Water Characterization Study.** An effluent and receiving water monitoring study is required to ensure adequate information is available for the next permit renewal. During the third year of this permit term, the Discharger shall conduct **bi-monthly** monitoring of the effluent at EFF-001 and of the receiving water at RSW-001 for all priority pollutants and other constituents of concern as described in Attachment I. Dioxin and Furan sampling shall be performed only twice during the year, as described in Attachment J. The report shall be completed in conformance with the following schedule.

Task	Compliance Date
i. Submit Work Plan and Time Schedule	No later than 2 years 6 months from adoption of this Order
ii. Conduct monthly[1] monitoring	During third or fourth year of permit term
iii. Submit Final Report	6 months following completion of final monitoring event

[1] Dioxin and Furan sampling shall be performed only twice during the year, as described in Attachment J.

6. **Annual Operations Report.** By 30 January of each year, the Discharger shall submit a written report to the Executive Officer containing the following:

   a. The names, certificate grades, and general responsibilities of all persons employed at the Facility.

   b. The names and telephone numbers of persons to contact regarding the plant for emergency and routine situations.

   c. A statement certifying when the flow meter(s) and other monitoring instruments and devices were last calibrated, including identification of who performed the calibration.

   d. A statement certifying whether the current operation and maintenance manual, and contingency plan, reflect the wastewater treatment plant as currently constructed and operated, and the dates when these documents were last revised and last reviewed for adequacy.

   e. The Discharger may also be requested to submit an annual report to the Central Valley Water Board with both tabular and graphical summaries of the monitoring data obtained during the previous year. Any such request shall be made in writing. The report shall discuss the compliance record. If violations have occurred, the report shall also discuss the corrective actions taken and planned to bring the discharge into full compliance with the waste discharge requirements.

7. **Annual Pretreatment Reporting Requirements.** The Discharger shall submit annually a report to the Central Valley Water Board, with copies to USEPA Region 9 and the State Water Board, describing the Discharger's pretreatment activities over the previous 12 months. In the event that the Discharger is not in compliance with any conditions or requirements of this Order, including noncompliance with pretreatment audit/compliance inspection requirements, then the Discharger shall also include the reasons for noncompliance and state how and when the Discharger shall comply with such conditions and requirements.

   An annual report shall be submitted by **28 February** and include at least the following items:

   a. A summary of analytical results from representative, flow proportioned, 24-hour composite sampling of the POTW's influent and effluent for those pollutants USEPA has identified under section 307(a) of the CWA which are known or suspected to be discharged by industrial users.

   Sludge shall be sampled during the same 24-hour period and analyzed for the same pollutants as the influent and effluent sampling and analysis. The sludge analyzed shall be a composite sample of a minimum of 12 discrete samples taken at equal time intervals over the 24-hour period. Wastewater and sludge sampling and analysis shall be performed at least annually. The discharger shall also provide any influent, effluent or sludge monitoring data for nonpriority pollutants which may be causing or contributing to Interference, Pass-Through or adversely impacting sludge quality. Sampling and analysis shall be performed in accordance with the techniques prescribed in 40 CFR Part 136 and amendments thereto.

   b. A discussion of Upset, Interference, or Pass-Through incidents, if any, at the treatment plant, which the Discharger knows or suspects were caused by industrial users of the POTW. The discussion shall include the reasons why the incidents occurred, the corrective actions taken and, if known, the name and address of, the industrial user(s) responsible. The discussion shall also include a review of the applicable pollutant limitations to determine whether any additional limitations, or changes to existing requirements, may be necessary to prevent Pass-Through, Interference, or noncompliance with sludge disposal requirements.

   c. The cumulative number of industrial users that the Discharger has notified regarding Baseline Monitoring Reports and the cumulative number of industrial user responses.

   d. An updated list of the Discharger's industrial users including their names and addresses, or a list of deletions and additions keyed to a previously submitted list. The Discharger shall provide a brief explanation for each deletion. The list shall identify the industrial users subject to federal categorical standards by specifying which set(s) of standards are applicable. The list shall indicate which categorical industries, or specific pollutants from each industry, are subject to

local limitations that are more stringent than the federal categorical standards. The Discharger shall also list the noncategorical industrial users that are subject only to local discharge limitations. The Discharger shall characterize the compliance status through the year of record of each industrial user by employing the following descriptions:

i. complied with baseline monitoring report requirements (where applicable);

ii. consistently achieved compliance;

iii. inconsistently achieved compliance;

iv. significantly violated applicable pretreatment requirements as defined by 40 CFR 403.8(f)(2)(vii);

v. complied with schedule to achieve compliance (include the date final compliance is required);

vi. did not achieve compliance and not on a compliance schedule; and

vii. compliance status unknown.

A report describing the compliance status of each industrial user characterized by the descriptions in items iii through vii above shall be submitted for each calendar quarter **within 21 days of the end of the quarter**. The report shall identify the specific compliance status of each such industrial user and shall also identify the compliance status of the POTW with regards to audit/pretreatment compliance inspection requirements. If none of the aforementioned conditions exist, at a minimum, a letter indicating that all industries are in compliance and no violations or changes to the pretreatment program have occurred during the quarter must be submitted. The information required in the fourth quarter report shall be included as part of the annual report. This quarterly reporting requirement shall commence upon issuance of this Order.

e. A summary of the inspection and sampling activities conducted by the Discharger during the past year to gather information and data regarding the industrial users. The summary shall include:

i. The names and addresses of the industrial users subjected to surveillance and an explanation of whether they were inspected, sampled, or both and the frequency of these activities at each user; and

ii. The conclusions or results from the inspection or sampling of each industrial user.

iii. A summary of the compliance and enforcement activities during the past year. The summary shall include the names and addresses of the industrial users affected by the following actions:

iv. Warning letters or notices of violation regarding the industrial users' apparent noncompliance with federal categorical standards or local discharge limitations. For each industrial user, identify whether the apparent violation concerned the federal categorical standards or local discharge limitations.

v. Administrative orders regarding the industrial users noncompliance with federal categorical standards or local discharge limitations. For each industrial user, identify whether the violation concerned the federal categorical standards or local discharge limitations.

vi. Civil actions regarding the industrial users' noncompliance with federal categorical standards or local discharge limitations. For each industrial user, identify whether the violation concerned the federal categorical standards or local discharge limitations.

vii. Criminal actions regarding the industrial users noncompliance with federal categorical standards or local discharge limitations. For each industrial user, identify whether the violation concerned the federal categorical standards or local discharge limitations.

viii. Assessment of monetary penalties. For each industrial user identify the amount of the penalties.

ix. Restriction of flow to the POTW.

x. Disconnection from discharge to the POTW.

xi. A description of any significant changes in operating the pretreatment program which differ from the information in the Discharger's approved Pretreatment Program including, but not limited to, changes concerning: the program's administrative structure, local industrial discharge limitations, monitoring program or monitoring frequencies, legal authority or enforcement policy, funding mechanisms, resource requirements, or staffing levels.

xii. A summary of the annual pretreatment budget, including the cost of pretreatment program functions and equipment purchases.

Duplicate signed copies of these Pretreatment Program reports shall be submitted to the Central Valley Water Board and the:

State Water Resources Control Board
Division of Water Quality
1001 I Street or P.O. Box 100
Sacramento, CA 95812

and the

Regional Administrator
U.S. Environmental Protection Agency WTR-5
75 Hawthorne Street
San Francisco, CA 94105

ATTACHMENT F – FACT SHEET

Table of Contents

I. Permit Information F-3
II. Facility Description F-4
A. Description of Wastewater and Biosolids Treatment or Controls F-4
B. Discharge Points and Receiving Waters F-5
C. Summary of Existing Requirements and Self-Monitoring Report (SMR) Data F-6
D. Compliance Summary F-7
E. Planned Changes F-7
III. Applicable Plans, Policies, and Regulations F-8
A. Legal Authorities F-8
B. California Environmental Quality Act (CEQA) F-8
C. State and Federal Regulations, Policies, and Plans F-8
D. Impaired Water Bodies on CWA 303(d) List F-13
E. Other Plans, Policies and Regulations F-14
IV. Rationale For Effluent Limitations and Discharge Specifications F-14
A. Discharge Prohibitions F-16
B. Technology-Based Effluent Limitations F-16
1. Scope and Authority F-16
2. Applicable Technology-Based Effluent Limitations F-17
C. Water Quality-Based Effluent Limitations (WQBELs) F-18
2. Applicable Beneficial Uses and Water Quality Criteria and Objectives F-19
3. Determining the Need for WQBELs F-45
4. WQBEL Calculations F-75
5. Whole Effluent Toxicity (WET) F-78
D. Final Effluent Limitations F-81
2. Averaging Periods for Effluent Limitations F-81
3. Satisfaction of Anti-Backsliding Requirements F-82
4. Satisfaction of Antidegradation Policy F-86
5. Stringency of Requirements for Individual Pollutants F-86
E. Interim Effluent Limitations F-88
F. Land Discharge Specifications (see Order R5-2007-0038) F-90
G. Reclamation Specifications (Not Applicable) F-90
V. Rationale for Receiving Water Limitations F-90
A. Surface Water F-90
B. Groundwater. (Set forth in Order R5-2007-0038) F-91
VI. Rationale for Monitoring and Reporting Requirements F-91
A. Influent Monitoring F-91
B. Effluent Monitoring F-91
C. Whole Effluent Toxicity Testing Requirements F-93
D. Receiving Water Monitoring F-93
2. Groundwater. (Set forth in Order R5-2007-0038) F-93
E. Other Monitoring Requirements F-94
VII. Rationale for Provisions F-94

A. Standard Provisions F-94
B. Special Provisions F-94
1. Reopener Provisions F-94
2. Special Studies and Additional Monitoring Requirements F-96
3. Best Management Practices and Pollution Prevention F-99
4. Construction, Operation, and Maintenance Specifications F-104
5. Special Provisions for Municipal Facilities (POTWs Only) F-104
6. Other Special Provisions F-105
7. Compliance Schedules F-105
VIII. Public Participation F-107
A. Notification of Interested Parties F-107
B. Written Comments F-108
C. Public Hearing F-108
D. Waste Discharge Requirements Petitions F-108
E. Information and Copying F-109
F. Register of Interested Persons F-109
G. Additional Information F-109

List of Tables

Table F-1. Facility Information F-3
Table F-2. Historic Effluent Limitations and Monitoring Data F-6
Table F-3a. 303 (d) List for Old River F-13
Table F-3b. 303 (d) List for the Sacramento-San Joaquin Delta Waterways F-13
Table F-4. Summary of Technology-based Effluent Limitations F-18
Table F-5. Basin Plan Beneficial Uses F-20
Table F-6. Maximum Rolling 30-Day Average Effluent Volume Fractions (% Effluent) F-30
Table F-7. Zinc ECA Evaluation F-38
Table F-7a. Copper ECA Evaluation F-39
Table F-8. Cadmium ECA Evaluation F-41
Table F-8a. Lead ECA Evaluation F-42
Table F-9. Summary of ECA Evaluations for CTR Hardness-dependent Metals F-43
Table F-10. Lead Receiving Water CTR Criteria Comparison F-47
Table F-11. Salinity Water Quality Criteria/Objectives F-71
Table F-12. Summary of Water Quality-Based Effluent Limitations F-77
Table F-13. Whole Effluent Chronic Toxicity Testing Results F-79
Table F-14. Determination of Assimilative Capacity for CDBM and DCBM F-84
Table F-15. Summary of Final Effluent Limitations F-87
Table F-16. Interim Effluent Limitation Calculation Summary F-90

ATTACHMENT F – FACT SHEET

As described in the Findings in section II of this Order, this Fact Sheet includes the legal requirements and technical rationale that serve as the basis for the requirements of this Order.

This Order has been prepared under a standardized format to accommodate a broad range of discharge requirements for Dischargers in California. Only those sections or subsections of this Order that are specifically identified as "not applicable" have been determined not to apply to this Discharger. Sections or subsections of this Order not specifically identified as "not applicable" are fully applicable to this Discharger.

I. PERMIT INFORMATION

The following table summarizes administrative information related to the Facility.

Table F-1. Facility Information

WDID	5B390108001
Discharger	City of Tracy
Name of Facility	Tracy Wastewater Treatment Plant
Facility Address	3900 Holly Drive
	Tracy, CA 95304
	San Joaquin County
Facility Contact, Title and Phone	Mr. Steve Bayley, Deputy Director of Public Works (209) 831-4434
Authorized Person to Sign and Submit Reports	Mr. Steven Bayley, Deputy Director of Public Works
Mailing Address	SAME
Billing Address	SAME
Type of Facility	POTW
Major or Minor Facility	Major
Threat to Water Quality	Category 1
Complexity	Category A
Pretreatment Program	Y
Reclamation Requirements	Not Applicable
Facility Permitted Flow	10.8 mgd(1)
Facility Design Flow	10.8 mgd(1)
Watershed	Sacramento-San Joaquin Delta
Receiving Water	Old River
Receiving Water Type	Sacramento-San Joaquin Delta

[1] Upon compliance with Special Provisions VI.C.7.d., the permitted flow may increase to 16 mgd.

A. The City of Tracy (hereinafter Discharger) is the owner and operator of the Tracy Wastewater Treatment Plant (hereinafter Facility), a Publicly-Owned Domestic Wastewater Treatment Works.

For the purposes of this Order, references to the "discharger" or "permittee" in applicable federal and state laws, regulations, plans, or policy are held to be equivalent to references to the Discharger herein.

B. The Facility discharges wastewater to Old River, a water of the United States, and was previously regulated by Order R5-2007-0036-01, which was adopted on 4 May 2007, and amended by Order R5-2011-0012 on 3 February 2011and expired on 1 May 2012. The terms and conditions of Order R5-2007-0036-01 were automatically continued and remained in effect until new Waste Discharge Requirements (WDRs) and National Pollutant Discharge Elimination System (NPDES) permit are adopted pursuant to this Order.

C. The Discharger filed a report of waste discharge and submitted an application for renewal of its WDRs and NPDES permit on 3 November 2011. Supplemental information was requested on 17 November 2011 and received on 24 January 2012 and 5 March 2012. A site visit was conducted on 16 July 2012, to observe operations and collect additional data to develop permit limitations and conditions.

D. This Order regulates the discharge of treated municipal wastewater from the Facility to Old River. As discussed above, as part of its treatment train the Discharger utilizes unlined industrial ponds, unlined sludge drying beds, and unlined sludge storage basins, which discharge wastes to groundwater. Waste Discharge Requirements Order R5-2007-0038 has been developed to regulate the incidental land discharges from these treatment facilities, in order to protect groundwater.

II. FACILITY DESCRIPTION

The Discharger provides sewerage service for the City of Tracy and serves a population of approximately 83,000. The design daily average flow capacity of the Facility is currently 10.8 million gallons per day (mgd).

A. Description of Wastewater and Biosolids Treatment or Controls

1. The Facility treats primarily domestic wastewater collected via the City of Tracy's wastewater collection system. The wastewater treatment plant also accepts industrial food processing wastewater from Leprino through a segregated industrial wastewater pipeline. The industrial food processing wastewater is pretreated in separate treatment facilities, which are located at the Facility, and introduced into the main treatment plant for final treatment and disposal, as discussed in more detail in Section II.A.3., below.

2. The Discharger provides wastewater treatment and disposal services for residences, businesses, and industries within the Tracy area. The Facility was originally constructed in 1930 and has experienced four major expansions. The most recent

expansion was completed in August 2008, which increased the treatment capacity from 9 mgd to 10.8 mgd and included nitrification, denitrification and tertiary filtration. Additional improvements will be completed during the term of this Order and will include construction of a second outfall near the existing outfall and paving of additional sludge drying beds.

3. The Facility is composed of a main treatment facility and an industrial facility. The main treatment facility consists of raw influent bar screening, primary sedimentation, flow equalization, biological nutrient removal, secondary sedimentation, tertiary filtration, chlorination, dechlorination and post-aeration. Biosolids are thickened by dissolved air flotation, anaerobically digested, and dewatered in impermeable drying beds. The dried biosolids are hauled off-site for land application or disposed in a landfill.

   The Discharger's industrial facility consists of four unlined industrial ponds (approximately 52 acres). In addition, Leprino, a local cheese manufacturer, leases two lined aerated lagoons and one 8-acre unlined oxidation pond from the Discharger for preliminary treatment of its industrial food processing wastewater and discharges to the Facility under an industrial pretreatment permit issued by the Discharger. Leprino transports its industrial wastewater to the Facility via a segregated industrial waste line. Leprino employees operate and maintain the industrial wastewater pipeline and leased pretreatment units. Leprino's industrial pretreatment program permit allows for a discharge of up to 850,000 gallons per day of industrial food-processing wastewater. Compliance with Leprino's industrial pretreatment permit is measured prior to discharge to Pond 1 (see Attachment C, Figure C-2). Leprino's industrial wastewater and process water from the main treatment plant are stored in the unlined industrial ponds and introduced into the primary sedimentation basins of the main treatment facility for treatment and disposal.

4. This Order only regulates the surface water discharge to Old River. Separate Waste Discharge Requirements (WDR) Order R5-2007-0038 regulates discharges to land at the Facility.

B. Discharge Points and Receiving Waters

1. The Facility is located in Section 21, T2S, R5E, MDB&M, as shown in Attachment B (Figure B), a part of this Order.

2. Treated municipal wastewater is discharged at Discharge Point No. 001, located 3.5-miles north of the Facility, through a 72-foot diffuser that includes ten 8-inch diameter risers spaced 8 feet on center. Discharge point 001 is located at Old River near the junction of Paradise Cut, Tom Paine Slough, Salmon Slough, and Sugar Cut Slough at a point Latitude 37°, 48', 17" N and longitude 121°, 24', 03" W. In order to increase discharge capacity, the Discharger is planning to construct a second outfall, Discharge Point 002, approximately 800 feet west of Discharge Point 001. Discharge Point 002 will be located at a point Latitude 37°, 48', 19" N

and longitude 121º, 24', 13" W and will utilize a 77-foot diffuser that includes twelve 8-inch diameter risers spaced 7 feet on center. Both outfalls will be utilized to discharge treated effluent.

3. Old River, in the vicinity of the discharge, is tidally influenced. River flow moves upstream during the incoming or flood tide, while downstream flows occur during the outgoing or ebb tide. Multiple dosing of the receiving water with effluent may occur as the tide moves the water column upstream and downstream past the outfall. Upstream San Joaquin River releases, tidal influences, the South Delta Temporary Barriers Program, and State Water Project and Central Valley Project pumping at Clifton Court Forebay affect the amount of flow in Old River. A more detailed discussion of Old River hydrodynamics and dilution is provided in Attachment F, Section IV.C.c.2.c.ii.

C. Summary of Existing Requirements and Self-Monitoring Report (SMR) Data

Effluent limitations and Discharge Specifications contained in Order R5-2007-0036-001 for discharges from Discharge Point No. 001 (Monitoring Location EFF-001) and representative monitoring data from the term of Order R5-2007-0036-01 are as follows:

Table F-2. Historic Effluent Limitations and Monitoring Data

Parameter	Units	Effluent Limitation			Monitoring Data (August 2008[1] To December 2011)		
		Average Monthly	Average Weekly	Maximum Daily	Highest Average Monthly Discharge	Highest Average Weekly Discharge	Highest Daily Discharge
Aluminum (Total Recoverable)	µg/L	462	200 (Annual Average)	755	310	21 (Annual Average)[2]	310
Ammonia (as N)[3]	mg/L	1.3	--	2.1	1.28	--	3.6
	lbs/ day	98 117[4] 174	--	158 189[4] 280	90[4]	--	113[4]
BOD 5-day 20°C	mg/L	10	15	20	4.6	6.4	8.6
	lbs/ day	751 900[4] 1334	1126 1351[4] 2002	1501 1801[4] 2669	351[4]	438[4]	564[4]
BOD % removal	%	85	--	--	>98	--	--
Chloro-dibromomethane	µg/L	3.6	--	7.6	28	--	28
Copper (Total Recoverable)	µg/L	9.1	--	10.4	5.9	--	5.9
Dichlo-robromomethane	µg/L	6.8	--	9.5	40	--	40

Parameter	Units	Effluent Limitation			Monitoring Data (August 2008[1] To December 2011)		
		Average Monthly	Average Weekly	Maximum Daily	Highest Average Monthly Discharge	Highest Average Weekly Discharge	Highest Daily Discharge
Dissolved Oxygen[5]	mg/L	--	--	> 5.0 (Daily Average)	--	--	> 5.2 (Daily Average)
Electrical Conductivity	µmhos/ cm	700 1000	--	1350[6]	1317 1468	--	1569
Iron (Total Recoverable)	µg/L	--	--	300	--	--	54
Nitrate (as N)	mg/L	10	--	--	8.5	--	--
Nitrite (as N)	mg/L	1	--	--	0.5	--	--
pH	Std. Units	--	--	6.5-8.5	--	--	7.69[2]
Temperature	°F	--	--	[7]	--	--	[8]
Total Suspended Solids	mg/L	10	15	20	2.5	3.4	4.7
	lbs/ day	751 900[4] 1334	1126 1351[4] 2002	1501 1801[4] 2669	173[4]	238[4]	326[4]

[1] Facility was upgraded to tertiary during August 2008.
[2] Highest daily average based on complete data from August 2008 through December 2011.
[3] Instantaneous minimum and maximum.
[4] Facility capacity 10.8 MGD.
[5] The daily average effluent DO concentration shall not be less than 5.0 mg/L.
[6] Interim goal of a maximum 500 µmhos/cm electrical conductivity increase over the weighted average electrical conductivity of the City of Tracy's water supply.
[7] The maximum temperature of the discharge shall not exceed the natural receiving water temperature by more than 20° F.
[8] The maximum observed difference between the discharge and natural receiving water 21° F.

D. Compliance Summary

The Discharger reported the following effluent limitation violations and mandatory minimum penalties were assessed, as summarized below, for the period of August 2008 thru December 2011:

Date	Constituent	Reported Result	Effluent Limitation
5 August 2008	Aluminum	290 µ/L	266 µ/L
10 September 2008	Aluminum	310 µ/L	266 µ/L
22 October 2008	Dichlorobromomethane	40 µ/L	37 µ/L (Interim TSO Limit)

E. Planned Changes

The Discharger is in the process of upgrading the Facility to improve treatment and expand capacity. The treatment system capacity will be expanded to 16 mgd through a four-phase expansion. Phase 1 of the upgrade and expansion was completed in August 2008, which included an increase in capacity from 9 mgd to 10.8 mgd,

nitrification/denitrification and tertiary filtration. The Report of Waste Discharge describes the proposed changes as follows:

1. **Phases 2 – 4 (16 mgd Design Capacity).** Phases 2-4 improvements expand the treatment and discharge capacity to 16 mgd. The proposed Phase 2 improvements include construction of a second outfall near the existing outfall, and paving of additional sludge drying beds using impermeable hydraulic asphalt cement pavement. The proposed Phase 3 improvements include construction of one primary clarifier, solids processing facility, installation of a new filter pump for tertiary treatment, and paving of sludge drying beds. The proposed Phase 4 improvements include construction of a new secondary clarifier, aeration basin, and replacement of two effluent pumps with larger capacity pumps, construction of a sludge digester, and paving the remaining sludge drying beds. The proposed initiation of operation of the Phase 2, 3 and 4 improvements are 2014, 2018, and 2025, respectively.

III. APPLICABLE PLANS, POLICIES, AND REGULATIONS

The requirements contained in this Order are based on the applicable plans, policies, and regulations identified in the Findings in section II of this Order. The applicable plans, policies, and regulations relevant to the discharge include the following:

A. Legal Authorities

This Order is issued pursuant to regulations in the Clean Water Act (CWA) and the California Water Code (Water Code) as specified in the Finding contained at section II.C of this Order.

B. California Environmental Quality Act (CEQA)

This Order meets the requirements of CEQA as specified in the Finding contained at section II.E of this Order.

C. State and Federal Regulations, Policies, and Plans

1. **Water Quality Control Plans.** This Order implements the following water quality control plans as specified in the Finding contained at section II.H of this Order.

   a. ***Water Quality Control Plan, Fourth Edition (Revised February 2007), for the Sacramento and San Joaquin River Basins* (Basin Plan)**

   The Basin Plan designates beneficial uses, establishes water quality objectives, and contains implementation programs and policies to achieve those objectives for all waters addressed through the plan. In addition, State Water Board Resolution No. 88-63 requires that, with certain exceptions, the Regional Water Board assign the municipal and domestic supply use to water bodies that do not have beneficial uses listed in the Basin Plan. The beneficial uses of the Sacramento-San Joaquin Delta, including Old River downstream of the

discharge, as identified in Table II-1 of the Basin Plan, are municipal and domestic supply, agricultural supply, agricultural stock watering, industrial process water supply, industrial service supply, water contact recreation, other non-contact water recreation, warm freshwater aquatic habitat, cold freshwater aquatic habitat, warm fish migration habitat, cold fish migration habitat, warm spawning habitat, wildlife habitat, and navigation.

The Basin Plan on page II-1.00 states: "*Protection and enhancement of existing and potential beneficial uses are primary goals of water quality planning…*" and with respect to disposal of wastewaters states that "...*disposal of wastewaters is [not] a prohibited use of waters of the State; it is merely a use which cannot be satisfied to the detriment of beneficial uses.*"

The federal CWA section 101(a)(2), states: "*it is the national goal that wherever attainable, an interim goal of water quality which provides for the protection and propagation of fish, shellfish, and wildlife, and for recreation in and on the water be achieved by July 1, 1983.*" Federal Regulations, developed to implement the requirements of the CWA, create a rebuttable presumption that all waters be designated as fishable and swimmable. Federal Regulations, 40 CFR sections 131.2 and 131.10, require that all waters of the State regulated to protect the beneficial uses of public water supply, protection and propagation of fish, shell fish and wildlife, recreation in and on the water, agricultural, industrial and other purposes including navigation. Section 131.3(e), 40 CFR, defines existing beneficial uses as those uses actually attained after November 28, 1975, whether or not they are included in the water quality standards. Federal Regulation, 40 CFR section 131.10 requires that uses be obtained by implementing effluent limitations, requires that all downstream uses be protected and states that in no case shall a state adopt waste transport or waste assimilation as a beneficial use for any waters of the United States.

b. *Water Quality Control Plan for Control of Temperature in the Coastal and Interstate Water and Enclosed Bays and Estuaries of California* (Thermal Plan)

The State Water Board adopted a Water Quality Control Plan for Control of Temperature in the Coastal and Interstate Waters and Enclosed Bays and Estuaries of California (Thermal Plan) on 18 May 1972, and amended this plan on 18 September 1975. This plan contains temperature objectives for inland surface waters. The Thermal Plan is applicable to this discharge. For purposes of the Thermal Plan, the Discharger is considered to be an Existing Discharger of Elevated Temperature Waste. The Thermal Plan in section 5.A., requires the following:

"*5. Estuaries*

A. Existing discharges

(1) Elevated temperature waste discharges shall comply with the following:

a. The maximum temperature shall not exceed the natural receiving water temperature by more than 20°F.

b. Elevated temperature waste discharges either individually or combined with other discharges shall not create a zone, defined by water temperatures of more than 1°F above natural receiving water temperature, which exceeds 25 percent of the cross-sectional area of a main river channel at any point.

c. No discharge shall cause a surface water temperature rise greater than 4°F above the natural temperature of the receiving waters at any time or place.

d. Additional limitations shall be imposed when necessary to assure protection of beneficial uses.

(2) Thermal waste discharges shall comply with the provisions of 5A (1) above and, in addition, the maximum temperature of thermal waste discharges shall not exceed 86°F."

Based on the Dischargers Final EIR, modeling indicates that Objective 5.A.(1)b of the Thermal Plan, may be exceeded 3 months of the year at the expanded discharge flow rate of 16 mgd. As described in the Final EIR for the expansion of the Facility, the Discharger has proposed mitigation measures to ensure that any thermal impacts will be less than significant. The previous Order required the Discharger conduct four years of intensive monitoring of thermal impacts in the vicinity of the outfall and evaluate the need for mitigation measures. This information will be used to evaluate if the discharge can meet the Thermal Plan requirements or whether a Thermal Plan exception will be needed prior to initiating discharge from Discharge Point No. 002. If a Thermal Plan exception is requested, the Discharger will be required to conduct consultations with the United States Fish and Wildlife Services, National Marine Fisheries Service, and California Department of Fish and Game to ensure the Thermal Plan exception is adequately protective of aquatic species, including rare, threatened, and endangered species protected under the Endangered Species Act. Prior to initiating discharge at Discharge Point No. 002, the Discharger is required to ensure compliance with the Thermal Plan and/or be granted a Thermal Plan exception by the Central Valley Water Board.

c. *Water Quality Control Plan for the San Francisco Bay/Sacramento-San Joaquin Delta Estuary* (Bay-Delta Plan)

The *Water Quality Control Plan for the San Francisco Bay/Sacramento-San Joaquin Delta Estuary* (Bay-Delta Plan) was adopted in May 1995 by the State Water Board superseding the 1991 Bay-Delta Plan. The Bay-Delta Plan was last updated on 13 December 2006. The Bay-Delta Plan identifies the beneficial uses of the estuary and includes objectives for flow, salinity, and endangered species protection.

The State Water Board adopted Decision 1641 (D-1641) on 29 December 1999, and revised on 15 March 2000. D-1641 implements flow objectives for the Bay-Delta Estuary, approves a petition to change points of diversion of the Central Valley Project and the State Water Project in the Southern Delta, and approves a petition to change places of use and purposes of use of the Central Valley Project.

The Bay-Delta Plan includes water quality objectives for Electrical Conductivity (EC) for the South Delta in the vicinity of the discharge[2]. On 1 June 2011, the Superior Court for Sacramento County entered a judgment and peremptory writ of mandate in the matter of *City of Tracy v. State Water Resources Control Board* (Case No; 34-2009-8000-392-CU-WM-GDS), ruling that the South Delta salinity objectives shall not apply to the City of Tracy and other municipal dischargers pending reconsideration of the South Delta salinity objectives and adoption of a proper program of implementation that includes municipal dischargers. The State Water Board is currently considering new salinity and flow objectives in the South Delta that will address the Court Order. Therefore, at the time this Order was adopted the South Delta salinity objectives were not applicable to the Discharger.

2. **National Toxics Rule (NTR) and California Toxics Rule (CTR).** This Order implements the NTR and CTR as specified in the Finding contained at section II.I of this Order.

3. **State Implementation Policy (SIP).** This Order implements the SIP as specified in the Finding contained at section II.I of this Order.

4. **Alaska Rule.** This Order is consistent with the Alaska Rule as specified in the Finding contained at section II.L of this Order.

5. **Antidegradation Policy.** As specified in the Finding contained at section II.N of this Order and as discussed in detail in the Fact Sheet (Attachment F, Section IV.D.4.), the discharge is consistent with the antidegradation provisions of 40 CFR section 131.12 and State Water Resources Control Board (State Water Board) Resolution 68-16.

6. **Anti-Backsliding Requirements.** This Order is consistent with anti-backsliding policies as specified in the Finding contained at section II.M of this Order. Compliance with the anti-backsliding requirements is discussed in the Fact Sheet (Attachment F, Section IV.D.3).

[2] The Bay-Delta Plan includes water quality objectives at three locations in the South Delta for EC. The water quality objectives are a 14-day running average EC of 700 µmhos/cm from 1 April – 31 Aug and a 14-day running average EC of 1000 µmhos/cm from 1 September - 31 March.

7. Emergency Planning and Community Right to Know Act

Section 13263.6(a) of the Water Code, requires that "*the Regional Water Board shall prescribe effluent limitations as part of the waste discharge requirements of a POTW for all substances that the most recent toxic chemical release data reported to the state emergency response commission pursuant to Section 313 of the Emergency Planning and Community Right to Know Act of 1986 (42 U.S.C. Sec. 11023) (EPCRA) indicate as discharged into the POTW, for which the State Water Board or the Regional Water Board has established numeric water quality objectives, and has determined that the discharge is or may be discharged at a level which will cause, have the reasonable potential to cause, or contribute to, an excursion above any numeric water quality objective*".

The Central Valley Water Board has adopted numeric water quality objectives in the Basin Plan for the following constituents: arsenic, chlorpyrifos, copper, diazinon, iron, and manganese. As detailed elsewhere in this Permit, available effluent quality data indicate that none of these constituents have a reasonable potential to cause or contribute to an excursion above any numeric water quality objectives included within the Basin Plan or in any State Water Board plan.

The most recent toxic chemical data report does not indicate any reportable off-site releases or discharges to the collection system for this Facility. Therefore, a reasonable potential analysis based on information from EPCRA cannot be conducted. Based on information from EPCRA, there is no reasonable potential to cause or contribute to an excursion above any numeric water quality objectives included within the Basin Plan or in any State Water Board plan, so no effluent limitations are included in this permit pursuant to Water Code section 13263.6(a).

However, as detailed elsewhere in this Order, available effluent data indicate that there are constituents present in the effluent that have a reasonable potential to cause or contribute to exceedances of water quality standards and require inclusion of effluent limitations based on federal and state laws and regulations.

8. Storm Water Requirements

USEPA promulgated federal regulations for storm water on 16 November 1990 in 40 CFR Parts 122, 123, and 124. The NPDES Industrial Storm Water Program regulates storm water discharges from wastewater treatment facilities. Wastewater treatment plants are applicable industries under the storm water program and are obligated to comply with the federal regulations.

9. Endangered Species Act. This Order is consistent with the Endangered Species Act as specified in the Finding contained at section II.P of this Order.

D. Impaired Water Bodies on CWA 303(d) List

1. Under section 303(d) of the 1972 CWA, states, territories and authorized tribes are required to develop lists of water quality limited segments. The waters on these lists do not meet water quality standards, even after point sources of pollution have installed the minimum required levels of pollution control technology. On 30 November 2006 USEPA gave final approval to California's 2006 section 303(d) List of Water Quality Limited Segments. The Basin Plan references this list of Water Quality Limited Segments (WQLSs), which are defined as "…*those sections of lakes, streams, rivers or other fresh water bodies where water quality does not meet (or is not expected to meet) water quality standards even after the application of appropriate limitations for point sources* (40 CFR Part 130, et seq.)." The Basin Plan also states, "*Additional treatment beyond minimum federal standards will be imposed on dischargers to [WQLSs]. Dischargers will be assigned or allocated a maximum allowable load of critical pollutants so that water quality objectives can be met in the segment*." The listing for Old River between the San Joaquin River and the Delta-Mendota Canal also includes dissolved oxygen (DO) deficiencies.

2. **Total Maximum Daily Loads (TMDLs).** USEPA requires the Central Valley Water Board to develop TMDLs for each 303(d) listed pollutant and water body combination. The status of each TMDL and applicable effluent limitations are discussed in Tables F-3a and F-3b, below, for each specific pollutant.

Table F-3a. 303 (d) List for Old River

Pollutant	Potential Sources	Proposed TMDL Completion
Chlorpyrifos	Agriculture	Approved 10 October 2007
Electrical Conductivity	Unknown	2021
Low Dissolved Oxygen	Agriculture	2019
Total Dissolved Solids	Agriculture	2021

Table F-3b. 303 (d) List for the Sacramento-San Joaquin Delta Waterways, southern portion

Pollutant	Potential Sources	Proposed TMDL Completion
Chlorpyrifos	Agriculture	Approved 10 October 2007
DDT (Dichlorodiphenyltrichloroethane)	Agriculture	(1)
Diazinon	Agriculture	Approved 10 October 2007
Electrical Conductivity	Agriculture	2019

Pollutant	Potential Sources	Proposed TMDL Completion
Chlorpyrifos	Agriculture	Approved 10 October 2007
DDT (Dichlorodiphenyltrichloroethane)	Agriculture	(1)
Diazinon	Agriculture	Approved 10 October 2007
Invasive Species	Unknown	2019
Organo-chlorine Group A Pesticides	Agriculture	(1)
Mercury	Resource Extraction	Approved 20 October 2011
Unknown Toxicity	Unknown	2019

[1] TMDL completion date will be updated when the next 303(d) list is updated.

3. The 303(d) listings and TMDLs have been considered in the development of the Order. A pollutant-by-pollutant evaluation of each pollutant of concern is described in section VI.C.3. of this Fact Sheet.

E. Other Plans, Policies and Regulations

1. The discharge authorized herein and the treatment and storage facilities associated with the discharge of treated municipal wastewater, except for discharges of residual sludge and solid waste, are exempt from the requirements of Title 27, California Code of Regulations (CCR), section 20005 *et seq* (hereafter Title 27). The exemption, pursuant to Title 27 CCR section 20090(a), is based on the following:

a. The waste consists primarily of domestic sewage and treated effluent;

b. The waste discharge requirements are consistent with water quality objectives; and

c. The treatment and storage facilities described herein are associated with a municipal wastewater treatment plant.

IV. RATIONALE FOR EFFLUENT LIMITATIONS AND DISCHARGE SPECIFICATIONS

Effluent limitations and toxic and pretreatment effluent standards established pursuant to sections 301 (Effluent Limitations), 302 (Water Quality Related Effluent Limitations), 304 (Information and Guidelines), and 307 (Toxic and Pretreatment Effluent Standards) of the CWA and amendments thereto are applicable to the discharge.

The CWA mandates the implementation of effluent limitations that are as stringent as necessary to meet water quality standards established pursuant to state or federal law [33 U.S.C., §1311(b)(1)(C); 40 CFR 122.44(d)(1)]. NPDES permits must incorporate

discharge limits necessary to ensure that water quality standards are met. This requirement applies to narrative criteria as well as to criteria specifying maximum amounts of particular pollutants. Pursuant to federal regulations, 40 CFR 122.44(d)(1)(i), NPDES permits must contain limits that control all pollutants that "*are or may be discharged at a level which will cause, have the reasonable potential to cause, or contribute to an excursion above any state water quality standard, including state narrative criteria for water quality*." Federal regulations, 40 CFR 122.44(d)(1)(vi), further provide that "[w]*here a state has not established a water quality criterion for a specific chemical pollutant that is present in an effluent at a concentration that causes, has the reasonable potential to cause, or contributes to an excursion above a narrative criterion within an applicable State water quality standard, the permitting authority must establish effluent limits*."

The CWA requires point source dischargers to control the amount of conventional, non-conventional, and toxic pollutants that are discharged into the waters of the United States. The control of pollutants discharged is established through effluent limitations and other requirements in NPDES permits. There are two principal bases for effluent limitations in the Code of Federal Regulations: 40 CFR 122.44(a) requires that permits include applicable technology-based limitations and standards; and 40 CFR 122.44(d) requires that permits include WQBELs to attain and maintain applicable numeric and narrative water quality criteria to protect the beneficial uses of the receiving water where numeric water quality objectives have not been established. The Basin Plan, page IV-17.00, contains an implementation policy, "*Policy for Application of Water Quality Objectives,*" that specifies that the Central Valley Water Board "*will, on a case-by-case basis, adopt numerical limitations in orders which will implement the narrative objectives*." This Policy complies with 40 CFR 122.44(d)(1). With respect to narrative objectives, the Central Valley Water Board must establish effluent limitations using one or more of three specified sources, including: (1) USEPA's published water quality criteria, (2) a proposed state criterion (i.e., water quality objective) or an explicit state policy interpreting its narrative water quality criteria (i.e., the Central Valley Water Board's "*Policy for Application of Water Quality Objectives*")(40 CFR 122.44(d)(1)(vi)(A), (B) or (C)), or (3) an indicator parameter.

The Basin Plan includes numeric site-specific water quality objectives and narrative objectives for toxicity, chemical constituents, discoloration, radionuclides, and tastes and odors. The narrative toxicity objective states: "*All waters shall be maintained free of toxic substances in concentrations that produce detrimental physiological responses in human, plant, animal, or aquatic life*." (Basin Plan at III-8.00) The Basin Plan states that material and relevant information, including numeric criteria, and recommendations from other agencies and scientific literature will be utilized in evaluating compliance with the narrative toxicity objective. The narrative chemical constituents objective states that waters shall not contain chemical constituents in concentrations that adversely affect beneficial uses. At minimum, "…*water designated for use as domestic or municipal supply (MUN) shall not contain concentrations of chemical constituents in excess of the maximum contaminant levels (MCLs)" in Title 22 of CCR.* The Basin Plan further states that, to protect all beneficial uses, the Central Valley Water Board may apply limits more stringent than MCLs. The narrative tastes and odors objective states: *"Water shall not*

contain taste- or odor-producing substances in concentrations that impart undesirable tastes or odors to domestic or municipal water supplies or to fish flesh or other edible products of aquatic origin, or that cause nuisance, or otherwise adversely affect beneficial uses."

A. Discharge Prohibitions

1. **Prohibition III.A (No discharge of treated wastewater at locations other than that described in this Order).** This prohibition is based on Water Code section 13260 that requires filing of a report of waste discharge (ROWD) before discharges can occur. The Discharger submitted a ROWD for the discharges described in this Order; therefore, discharges not described in this Order are prohibited.

2. **Prohibition III.B (No bypasses or overflow of untreated wastewater, except under the conditions at CFR Part 122.41(m)(4)).** As stated in section I.G of Attachment D, Standard Provisions, this Order prohibits bypass from any portion of the treatment facility. Federal regulations, 40 CFR 122.41(m), define "bypass" as the intentional diversion of waste streams from any portion of a treatment facility. This section of the federal regulations, 40 CFR 122.41(m)(4), prohibits bypass unless it is unavoidable to prevent loss of life, personal injury, or severe property damage. In considering the Regional Water Board's prohibition of bypasses, the State Water Board adopted a precedential decision, Order WQO 2002-0015, which cites the federal regulations, 40 CFR 122.41(m), as allowing bypass only for essential maintenance to assure efficient operation.

3. **Prohibition III.C (No controllable condition shall create a nuisance).** This prohibition is based on Water Code section 13050 that requires water quality objectives established for the prevention of nuisance within a specific area. The Basin Plan prohibits conditions that create a nuisance.

4. **Prohibition III.D (No inclusion of pollutant free wastewater shall cause improper operation of the Facility's systems).** This prohibition is based on CFR Part 122.41 et seq. that requires the proper design and operation of treatment facilities.

B. Technology-Based Effluent Limitations

1. Scope and Authority

Section 301(b) of the CWA and implementing USEPA permit regulations at 40 CFR 122.44 require that permits include conditions meeting applicable technology-based requirements at a minimum, and any more stringent effluent limitations necessary to meet applicable water quality standards. The discharge authorized by this Order must meet minimum federal technology-based requirements based on Secondary Treatment Standards at 40 CFR Part 133.

Regulations promulgated in 40 CFR 125.3(a)(1) require technology-based effluent limitations for municipal Dischargers to be placed in NPDES permits based on Secondary Treatment Standards or Equivalent to Secondary Treatment Standards.

The Federal Water Pollution Control Act Amendments of 1972 (PL 92-500) established the minimum performance requirements for POTWs [defined in section 304(d)(1)]. Section 301(b)(1)(B) of that Act requires that such treatment works must, as a minimum, meet effluent limitations based on secondary treatment as defined by the USEPA Administrator.

Based on this statutory requirement, USEPA developed secondary treatment regulations, which are specified in 40 CFR Part 133. These technology-based regulations apply to all municipal wastewater treatment plants and identify the minimum level of effluent quality attainable by secondary treatment in terms of 5-day biochemical oxygen demand (BOD_5), total suspended solids (TSS), and pH.

2. Applicable Technology-Based Effluent Limitations

a. BOD_5 and TSS. Federal regulations, 40 CFR Part 133, establish the minimum weekly and monthly average level of effluent quality attainable by secondary treatment for BOD_5 and TSS. Tertiary treatment is necessary to protect the beneficial uses of the receiving stream and the final effluent limitations for BOD_5 and TSS are based on the technical capability of the tertiary process. BOD_5 is a measure of the amount of oxygen used in the biochemical oxidation of organic matter. The secondary and tertiary treatment standards for BOD_5 and TSS are indicators of the effectiveness of the treatment processes. The principal design parameter for wastewater treatment plants is the daily BOD_5 and TSS loading rates and the corresponding removal rate of the system. In applying 40 CFR Part 133 for weekly and monthly average BOD_5 and TSS limitations, the application of tertiary treatment processes results in the ability to achieve lower levels for BOD_5 and TSS than the secondary standards currently prescribed; the 30-day average BOD_5 and TSS limitations have been revised to 10 mg/L, which is technically based on the capability of a tertiary system. In addition to the average weekly and average monthly effluent limitations, a daily maximum effluent limitation for BOD_5 and TSS is included in the Order to ensure that the treatment works are not organically overloaded and operate in accordance with design capabilities. In addition, 40 CFR 133.102, in describing the minimum level of effluent quality attainable by secondary treatment, states that the 30-day average percent removal shall not be less than 85 percent. If 85 percent removal of BOD_5 and TSS must be achieved by a secondary treatment plant, it must also be achieved by a tertiary (i.e., treatment beyond secondary level) treatment plant. This Order contains a limitation requiring an average of 85 percent removal of BOD_5 and TSS over each calendar month.

b. Flow. The Facility is currently designed to provide a tertiary level of treatment for up to a design flow of 10.8 mgd. The Discharger is expanding its capacity through a four-phased expansion. Phase 1 has been constructed and included an upgrade to tertiary treatment with a design capacity of 10.8 mgd. Phase 2

has a design capacity of 12 mgd, Phase 3 has a design capacity of 13.6 mgd, and Phase 4 has a design capacity of 16 mgd. Therefore, this Order includes average dry weather discharge flow effluent limits ranging from 10.8 mgd to 16 mgd based on the applicable design flows for the Facility.

c. **pH.** The secondary treatment regulations at 40 CFR Part 133 also require that pH be maintained between 6.0 and 9.0 standard units.

Summary of Technology-based Effluent Limitations
Discharge Point No. 001 and Discharge Point 002

Table F-4. Summary of Technology-based Effluent Limitations

Parameter	Units	Effluent Limitations				
		Average Monthly	Average Weekly	Maximum Daily	Instantaneous Minimum	Instantaneous Maximum
Flow	mgd	--	--	10.8 - 16[1]	--	--
BOD 5-day 20°C	mg/L	10	15	20	--	--
Total Suspended Solids	mg/L	10	15	20	--	--
pH[2]	Standard Units	--	--	--	6.0	9.0

1 Based on an existing permitted flow of 10.8 mgd. Flow capacity will increase with construction of Phases 2, 3 and 4.
2 More stringent water quality-based effluent limits have been implemented for pH.

C. Water Quality-Based Effluent Limitations (WQBELs)

1. Scope and Authority

Section 301(b) of the CWA and 40 CFR 122.44(d) require that permits include limitations more stringent than applicable federal technology-based requirements where necessary to achieve applicable water quality standards. This Order contains requirements, expressed as a technology equivalence requirement, more stringent than secondary treatment requirements that are necessary to meet applicable water quality standards. The rationale for these requirements, which consist of tertiary treatment or equivalent requirements or other provisions, is discussed in section IV.C.3.c.x of this Fact Sheet.

40 CFR 122.44(d)(1)(i) mandates that permits include effluent limitations for all pollutants that are or may be discharged at levels that have the reasonable potential to cause or contribute to an instream exceedance of an applicable water quality standard, including numeric and narrative objectives within a standard. Where reasonable potential has been established for a pollutant, but there is no numeric criterion or objective for the pollutant, WQBELs must be established using: (1) USEPA criteria guidance under CWA section 304(a), supplemented where necessary by other relevant information; (2) an indicator parameter for the pollutant of concern; or (3) a calculated numeric water quality criterion, such as a proposed state criterion or policy interpreting the state's narrative criterion, supplemented with other relevant information, as provided in 40 CFR 122.44(d)(1)(vi).

The process for determining reasonable potential and calculating WQBELs when necessary is intended to protect the designated uses of the receiving water as specified in the Basin Plan, and achieve applicable water quality objectives and criteria that are contained in other state plans and policies, or any applicable water quality criteria contained in the CTR and NTR.

2. Applicable Beneficial Uses and Water Quality Criteria and Objectives

The Basin Plan designates beneficial uses, establishes water quality objectives, and contains implementation programs and policies to achieve those objectives for all waters addressed through the plan. In addition, the Basin Plan implements State Water Board Resolution No. 88-63, which established state policy that all waters, with certain exceptions, should be considered suitable or potentially suitable for municipal or domestic supply.

The Basin Plan on page II-1.00 states: "*Protection and enhancement of existing and potential beneficial uses are primary goals of water quality planning…*" and with respect to disposal of wastewaters states that "*...disposal of wastewaters is [not] a prohibited use of waters of the State; it is merely a use which cannot be satisfied to the detriment of beneficial uses.*"

The federal CWA section 101(a)(2), states: "*it is the national goal that wherever attainable, an interim goal of water quality which provides for the protection and propagation of fish, shellfish, and wildlife, and for recreation in and on the water be achieved by July 1, 1983.*" Federal Regulations, developed to implement the requirements of the CWA, create a rebuttable presumption that all waters be designated as fishable and swimmable. Federal Regulations, 40 CFR sections 131.2 and 131.10, require that all waters of the State regulated to protect the beneficial uses of public water supply, protection and propagation of fish, shell fish and wildlife, recreation in and on the water, agricultural, industrial and other purposes including navigation. Section 131.3(e), 40 CFR, defines existing beneficial uses as those uses actually attained after 28 November 1975, whether or not they are included in the water quality standards. Federal Regulation, 40 CFR section 131.10 requires that uses be obtained by implementing effluent limitations, requires that all downstream uses be protected and states that in no case shall a state adopt waste transport or waste assimilation as a beneficial use for any waters of the United States.

a. **Receiving Water and Beneficial Uses.** The beneficial uses of the Sacramento-San Joaquin Delta, including Old River downstream of the discharge, as identified in Table II-1 of the Basin Plan are municipal and domestic supply (MUN), agricultural supply (AGR), agricultural stock watering, industrial process water supply (PRO), industrial service supply (IND), water contact recreation (REC1), other non-contact water recreation (REC2), warm freshwater aquatic habitat (WARM), cold freshwater aquatic habitat (COLD), migration of aquatic organisms (MIGR) both warm and cold habitats, warm spawning habitat (SPWN), wildlife habitat (WILD), commercial and sportfishing (COMM), and navigation (NAV). The beneficial uses of the underlying

groundwater are municipal and domestic (MUN), industrial service (IND), industrial process (PRO) and agricultural supply (AGR). Thus, beneficial uses applicable to Old River are described as follows:

Table F-5. Basin Plan Beneficial Uses

Discharge Point	Receiving Water Name	Beneficial Use(s)
001, 002*	Old River	Existing uses from Table II-1 of the Basin Plan: Municipal and domestic supply (MUN); agricultural supply and stock watering (AGR); industrial process water supply (PROC), industrial service supply (IND); water contact recreation (REC-1); other non-contact water recreation (REC-2); warm freshwater aquatic habitat (WARM); cold freshwater aquatic habitat (COLD); warm and cold fish migration habitat (MIGR); warm spawning habitat (SPAWN); wildlife habitat (WILD); commercial and sportfishing (COMM) and navigation (NAV). Potential uses from Table II-1 of the Basin Plan: None Intermittent uses from Section II of the Basin Plan: None Suitable uses from State Water Board Resolution No. 88-63: Municipal and domestic supply (MUN).

*Future outfall proposed for Facility expansion, expected 2015.

b. **Effluent and Ambient Background Data.** The reasonable potential analysis (RPA), as described in section IV.C.3 of this Fact Sheet, was based on data since tertiary upgrades, from August 2008 through December 2011, which includes effluent and ambient background data submitted in the SMRs, eSMRs, and the Report of Waste Discharge (ROWD). When determining reasonable potential for constituents using alternate data periods, it will be discussed in the Fact Sheet (IV.C.3.).

c. **Assimilative Capacity/Mixing Zone.** The issues of dilution credits and mixing zones are complex. Subsection i. summarizes the flow management of the San Joaquin River (SJR) and the Bay Delta Plan, Subsection ii. discusses the flow dynamics of Old River, Subsection iii. reviews the history of available flow data, Subsection iv. discusses the existing hydrodynamic and water quality models, Subsection v. discusses available mixing zone guidance, Subsection vi. provides evaluation of available dilution credits for compliance with human health criteria, and Subsection vii. discusses issues related to regulatory compliance for dilution credits and mixing zones.

i. **Delta Operations, Bay-Delta Plan, and CALFED.** The *Water Quality Control Plan for the San Francisco Bay/Sacramento-San Joaquin Delta Estuary* (Bay-Delta Plan) was adopted in May 1995 by the State Water Board

and was revised in December 2006. The Bay-Delta Plan identifies the beneficial uses of the estuary and includes objectives for flow, salinity, and endangered species protection. The Bay-Delta Plan is reviewed periodically in compliance with CWC section 13240 and federal CWA section 303(c).

In December 1999 and March 2000, the State Water Board adopted and revised Water Rights Decision 1641 (D-1641) as part of the State Water Board's implementation of the Bay-Delta Plan. Many of the objectives in the Bay-Delta Plan are best implemented by making changes in the flow of water or in the operation of facilities that move water. Accordingly, this decision amends certain water rights by assigning responsibilities to the persons or entities holding those rights to help meet the objectives.

ii. **South Delta/Old River Hydrodynamics.** The responsibility for meeting certain objectives in the South Delta is currently placed with the Department of Water Resources (DWR) and the United States Bureau of Reclamation (USBR) through D-1641. To meet these objectives, USBR controls the San Joaquin River flow at Vernalis and DWR utilizes temporary barriers in the south Delta through the South Delta Temporary Barriers Program, instituted in 1991. The South Delta Temporary Barriers Program provides temporary measures to mitigate flow, water quality, water availability, and the protection of migrating San Joaquin River salmon. This project is ongoing until permanent flow control structures are installed as part of the South Delta Improvements Program.

The South Delta Temporary Barriers Program is comprised of temporary barriers that are installed at the Head of Old River, Middle River, Grant Line Canal, and Old River near Tracy. The Head of Old River (HOR) barrier restricts flow from entering Old River. The HOR barrier was historically a physical barrier installed in the spring and fall. In the spring, the HOR barrier is principally a fish barrier and helps to reduce fishery impacts caused by the Central Valley Project and the State Water Project. The spring installation of the HOR barrier reduces entrainment of emigrating juvenile San Joaquin fall-run Chinook salmon in the southern Delta. The spring HOR barrier is no longer a physical barrier. It is Bio-Acoustic Fish Fence (BAFF). The BAFF uses a combination of fish-deterring sound from underwater speakers, air bubbles, and light, to deter juvenile salmon and steelhead from entering Old River, while allowing water to pass through the barrier. In the fall, the HOR barrier is still a physical barrier and is installed to maintain flow rates in the SJR thereby improving dissolved oxygen conditions in the Stockton Deep Water Ship Channel.

The Grant Line Canal, Middle River, and Old River barriers are agricultural barriers. These are intended to primarily benefit agricultural water users in the south Delta. The agricultural barriers allow incoming tides to flow upstream while restricting downstream flow. These barriers reduce tidally caused flow reversals in the South Delta. The agricultural barriers are

installed to reduce salinity in the South Delta in an effort to meet the D-1641 salinity objectives. The barriers also increase water levels and circulation patterns for local agricultural diversions. Flow conditions in Old River in the vicinity of the discharge are affected by San Joaquin River flows, barrier operations, and state and federal pumping operations from the State Water Project and Central Valley Project. Additionally, the discharge is located in a tidal zone. River flow moves upstream during the incoming or flood tide, while downstream flows occur during the outgoing or ebb tide. Multiple dosing of the receiving water with effluent occurs as the tide moves the water column upstream and downstream past the point of discharge. The complex dynamics of the stream flow, the tidal flows, the barrier operations, and the state and federal pumping operations must be considered in an evaluation of the available dilution for the discharge.

Flow conditions in Old River in the vicinity of the discharge are affected by San Joaquin River flows, barrier operations, and state and federal pumping operations from the State Water Project and Central Valley Project. Additionally, the discharge is located in a tidal zone. River flow moves upstream during the incoming or flood tide, while downstream flows occur during the outgoing or ebb tide. Multiple dosing of the receiving water with effluent occurs as the tide moves the water column upstream and downstream past the point of discharge. The complex dynamics of the stream flow, the tidal flows, the barrier operations, and the state and federal pumping operations must be considered in an evaluation of the available dilution for the discharge.

The flow of diluting water at the point of discharge varies with the tidal cycle. Typically, as net river flow drops, at some point in the tidal cycle the incoming tide balances against the downstream river flow resulting in river flow stagnation and very little dilution of effluent. Below this net river flow, the direction of the river flow reverses with incoming tides resulting in short periods of time with zero net river flows. Additionally, with flow reversals, some volume of river water is multiple dosed with the effluent as the river flows downstream past the discharge, reverses, moves upstream past the discharge a second time, then again reverses direction and passes the discharge point a third time as it moves down the river. A particular volume of river water may move back and forth, past the discharge point many times due to tidal action, each time receiving an additional load of wastewater. This is exacerbated with the barriers installed in the South Delta. The barriers minimize inflow from the San Joaquin River and restrict downstream flows. Therefore, flows while the barriers are in place are primarily tidal, since the HOR barrier directs the majority of San Joaquin River flows north towards Stockton. In addition, the agricultural barriers allow flood tides through but the ebb tides are restricted. This maintains water levels for irrigation, but reduces downstream flow in Old River.

iii. **Historical Receiving Water Flow Data.** Real-time flow monitoring data for Old River in the vicinity of the discharge is not available.

However, flow data in the area are available from the United States Geological Survey (USGS) San Joaquin River (SJR) flow monitoring station at Vernalis, upstream of Head of Old River. SJR flow data from 1923 to the present are available from the Vernalis station. These flow data are not directly representative of that in Old River due to great variations that can occur with barrier operations and Delta withdrawals. However, the data are useful for determining critical low flow periods in the region.

The Discharger has not installed a real-time monitoring station in the vicinity of the outfall to provide continuous monitoring of flow direction and velocity. Real-time monitoring would provide a more accurate assessment of dilution.

iv. **Water Quality Models.** Water quality dilution studies have been provided by the Discharger to support permit and CEQA requirements. Carollo Engineers prepared a dilution study for the Discharger titled *Dilution Study and Water Quality Attainability Assessment*, April 1999. The Carollo study includes dilution modeling by Flow Science Incorporated. Larry Walker Associates (LWA) prepared a dilution study for the Discharger titled *Water Quality Analysis of Surface Water Discharge*, 2001. The LWA study includes dilution modeling by Resource Management Associates (RMA).

Dilution Study and Water Quality Attainability Assessment, April 1999 (Carollo Engineers). The Carollo Engineers study includes a dilution analysis and river flow analysis utilizing the Fischer-Delta Model (FDM) to generate average seasonal dilution values. The FDM is a proprietary computer model used to simulate the hydrodynamics of the entire Delta. The study utilized 5.9 mgd for the effluent discharge rate and 20-year historical Delta inflow and outflow data were utilized to generate monthly average daily flows at the point of discharge. The model was calibrated with a rubidium tracer study conducted in September and November 1996. Several deficiencies are found in the model that causes uncertainty in the accuracy of the results.

- The FDM model was calibrated during a wet water year hydrological classification with temporary barriers only partially installed. The extrapolation of the calibrated model from a wet water year with partial barrier installation to a critically dry water year with all barriers installed creates uncertainty that was not addressed in the study. Furthermore, calibration alone is not adequate to determine the predictive capability of a model for a particular receiving water. Validation and sensitivity analyses are necessary to determine if the model is predictively valid. Without validation testing, the calibrated model remains a description of the conditions defined by the calibrated data set.
- The model stated that average conditions were utilized, and failed to present additional information as to the error, uncertainty, sensitivity, or

limitations of the site-specific model over the range of conditions considered in the study.

- Modeling was carried out with the condition that the downstream agricultural barriers were in place during the summer and the HOR fish barrier was in place in the spring and fall. The model did not anticipate the scenario where all barriers were installed, which greatly restricts river flow and tidal influence. This scenario has occurred several times, most recently in May and October 2001, October 2002, October 2003, and October 2004.
- The model only used 5.9 mgd for the effluent discharge when the Report of Waste Discharge requests a discharge of 16 mgd.
- The study did not consider the Mountain House Wastewater Treatment Facility located approximately 8 miles downstream of the outfall. Mountain House is projected to discharge 5.4 mgd of tertiary treated wastewater to Old River at build out.
- The calculated dilution was based on the results of nested models. The calculated net Delta outflow was input into the FDM to calculate the flow, which was used to estimate the dilution. The study failed to discuss the confidence level in the model outputs or how the variable inputs affected the estimated final dilution (e.g. error, sensitivity, uncertainty, etc.).

Water Quality Analysis of Surface Water Discharge, 2001 (Larry Walker Associates). A water quality analysis was performed by Larry Walker Associates (LWA), as part of the CEQA process for the expansion of the Facility, to evaluate the impacts of the increased discharge on Old River. LWA developed the report titled, *Water Quality Analysis of Surface Water Discharge*, October 2001, which used modeling performed by Resource Management Systems, Inc. (*Analysis of the Fate and Water Quality Impacts of the City of Tracy Discharge*, May 15, 2001). The water quality analysis and modeling report are included in the October 2001 Tracy Wastewater Treatment Plant Expansion Draft Environmental Impact Report.

The USEPA approved CORMIX model was used to evaluate initial dilution in the vicinity of the diffuser and define the mixing zones. Computed tidally averaged minimum monthly average velocities, flows, and depths were used in the near-field analysis for temperature, ammonia, and other sensitive parameters. Model sensitivity analysis indicated that the initial dilution is dominated by the high exit velocity of the diffusers relative to the low current velocities and the temperature differences in the receiving stream.

The far field analysis utilized the Link Node hydrodynamic model to simulate the long-term transport and fate of a discharge. It uses monthly averaged hydrologic data from the DWR-SIM model covering the 1922 to 1995 hydrologic year period. The model was utilized to calculate the effluent fraction and the change in dissolved oxygen (DO) concentrations at various

locations in the South Delta. The simulation was run with four different Delta configurations; (1) no barriers, (2) HOR barrier only, (3) agricultural barriers only, and (4) permanent barriers. The model was calibrated using stage and flow data from April 1997, a wet hydrologic water year, with the assumption that the Grant Line Canal (GLC) barrier was not installed.

Several deficiencies are found in the study that causes uncertainty in the accuracy of the results.

CORMIX is not designed for discharges to tidally influenced receiving waters, whereas the tidal environment in Old River is significant. The study recognizes that "*tidal action causes reverse flows and prolonged periods of slake water (several hours) at low river flows*". This results in the receiving water being multiple-dosed with effluent. The study did not discuss the uncertainty in the near-field model results due to the multiple-dosing. The study did not consider the Mountain House Wastewater Treatment Facility located approximately 8 miles downstream of the outfall. Mountain House is projected to discharge 5.4 mgd of tertiary treated wastewater to Old River in the near future.

The far-field water quality analysis did not evaluate the Delta configuration of all temporary barriers installed (HOR and agricultural barriers). It assumed the agricultural barriers are installed through September. However, recent configurations (2001-2004) have the agricultural barriers installed until the middle of November, which coincides with installation of the Head of Old River fish barrier from October through November. This configuration results in the lowest likely flows in Old River at the point of discharge.

v. **Regulatory Guidance for Dilution Credits and Mixing Zones.** The Discharger has requested mixing zones and dilution credits for compliance with human carcinogen water quality criteria. The Central Valley Water Board has the discretion to accept or deny mixing zones and dilution credits. The CWA directs states to adopt water quality standards to protect the quality of its waters. USEPA's current water quality standards regulation authorizes states to adopt general policies, such as mixing zones, to implement state water quality standards (40 CFR section 122.44 and section 122.45). The USEPA allows states to have broad flexibility in designing its mixing zone policies. Primary policy and guidance on determining mixing zone and dilution credits is provided by the Policy for Implementation of Toxics Standards for Inland Surface Waters, Enclosed Bays and Estuaries of California (State Implementation Policy or SIP) and the Basin Plan. If no procedure applies in the SIP or the Basin Plan, then the Regional Water Board may use the USEPA Technical Support Document for Water Quality-Based Toxics Control (EPA/505/2-90-001) (TSD).

The TSD defines a mixing zone as follows, "…*a mixing zone is an area where an effluent discharge undergoes initial dilution and is extended to cover the secondary mixing in the ambient waterbody. A mixing zone is an allocated*

impact zone where water quality criteria can be exceeded as long as acutely toxic conditions are prevented."[3] The SIP provides guidance on mixing zones and dilution credits in establishing water quality-based effluent limitations. Water quality criteria and objectives must be met throughout a water body except within a mixing zone. All mixing zones shall be as small as practicable and must meet specific conditions. The allowance of mixing zones by the Central Valley Water Board is discretionary and can be granted parameter-by-parameter and/or type of criteria (e.g., acute or chronic aquatic life criteria).

For non-priority pollutant constituents the allowance of mixing zones by the Central Valley Water Board is discussed in the Basin Plan, Policy for Application of Water Quality Objectives, which states in part, "*In conjunction with the issuance of NPDES and storm water permits, the Regional Board may designate mixing zones within which water quality objectives will not apply provided the discharger has demonstrated to the satisfaction of the Regional Board that the mixing zone will not adversely impact beneficial uses. If allowed, different mixing zones may be designated for different types of objectives, including, but not limited to, acute aquatic life objectives, chronic aquatic life objectives, human health objectives, and acute and chronic whole effluent toxicity objectives, depending in part on the averaging period over which the objectives apply. In determining the size of such mixing zones, the Regional Board will consider the applicable procedures and guidelines in the EPA's Water Quality Standards Handbook and the [TSD]. Pursuant to EPA guidelines, mixing zones designated for acute aquatic life objectives will generally be limited to a small zone of initial dilution in the immediate vicinity of the discharge*."[4]

For priority pollutants the SIP supersedes the Basin Plan mixing zone provisions. Section 1.4.2 of the SIP states, in part, "…*with the exception of effluent limitations derived from TMDLs, in establishing and determining compliance with effluent limitations for applicable human health, acute aquatic life, or chronic aquatic life priority pollutant criteria/objectives or the toxicity objective for aquatic life protection in a basin plan, the Regional Board may grant mixing zones and dilution credits to dischargers ... The applicable priority pollutant criteria and objectives are to be met throughout a water body except within any mixing zone granted by the Regional Board. <u>The allowance of mixing zones is discretionary and shall be determined on a discharge-by-discharge basis.</u> The Regional Board may consider allowing mixing zones and dilution credits only for discharges with a physically identifiable point of discharge that is regulated through an NPDES permit issued by the Regional Board.*" (<u>emphasis added</u>)[5]

3 TSD, Glossary
4 Basin Plan, page IV-16.00
5 SIP, pg. 15

Both federal and state guidance include similar mixing zone conditions, the SIP conditions are as follows:

"A mixing zone shall be as small as practicable. The following conditions must be met in allowing a mixing zone: (emphasis added)

A: A mixing zone shall not:

(1) compromise the integrity of the entire water body;

(2) cause acutely toxic conditions to aquatic life passing through the mixing zone;

(3) restrict the passage of aquatic life;

(4) adversely impact biologically sensitive or critical habitats, including, but not limited to, habitat of species listed under federal or State endangered species laws;

(5) produce undesirable or nuisance aquatic life;

(6) result in floating debris, oil, or scum;

(7) produce objectionable color, odor, taste, or turbidity;

(8) cause objectionable bottom deposits;

(9) cause nuisance;

(10) dominate the receiving water body or overlap a mixing zone from different outfalls; or

(11) *be allowed at or near any drinking water intake. A mixing zone is not a source of drinking water. To the extent of any conflict between this determination and the Sources of Drinking Water Policy (Resolution No. 88-63), this SIP supersedes the provisions of that policy.*"

Section 1.4.2.1 of the SIP establishes the authority for the Central Valley Water Board to consider dilution credits based on the mixing zone conditions in a receiving water. Section 1.4.2.1 in part states:

> *"The dilution credit, D, is a numerical value associated with the mixing zone that accounts for the receiving water entrained into the discharge. The dilution credit is a value used in the calculation of effluent limitations (described in Section 1.4). Dilution credits may be limited or denied on a pollutant-by-pollutant basis, which may result in a dilution credit for all, some, or no priority pollutants in the discharge." (emphasis added)*

The mixing zone is thus an administrative construct defined as an area around the outfall that may exceed water quality objectives, but is otherwise protective of the beneficial uses. Dilution is defined as the amount of mixing that has occurred at the edge of this mixing zone under critical conditions, thus protecting the beneficial uses at the concentration and for the duration and

frequency required.

vi. **Evaluation of Available Dilution for Priority Pollutant Human Health Criteria.** The human health-based criteria for carcinogens, other than arsenic, are based on safe levels for lifetime exposure and dilution is based on the harmonic mean flow of the receiving water. In determining the available receiving water dilution for compliance with human carcinogen criteria, the SIP, section 1.4.2.1 requires that the harmonic mean of the receiving water flow be compared against the arithmetic mean of the effluent flow of the observed discharge period. However, direct Old River flow measurements do not exist over the required period.

The Final Environmental Impact Report (EIR) for the Facility expansion includes a short discussion of the harmonic mean flows. Table 2-9 of the Final EIR includes a table of modeled harmonic mean flows based on the DWR-SIM model. However, insufficient information is provided to determine how the modeled flows were calculated. No information regarding the model inputs has been provided in the Final EIR, and the accuracy of the modeled flows cannot be verified.

The Discharger subsequently re-evaluated the harmonic mean flows and available dilution using DWRs Delta Simulation Model 2 (DSM2), which was used in the development of the draft Environmental Impact Statement/Environment Impact Report (EIS/R) for the South Delta Improvements Program (SDIP). Reasonable worst-case assumptions were used for the model inputs, which are outlined in a technical memorandum prepared by CH2M Hill for the Discharger, dated 3 April 2006, and in more detail in Appendix D of the draft EIS/R.

Modeling was performed for a 16-year period, from 1975-1991, with reasonable worst-case assumptions for the operation of SDIP's operable gates. The estimated daily harmonic mean flow was 549 cfs in Old River, near the discharge. When excluding the wet years of 1982 and 1985, the estimated daily harmonic mean flow was 492 cfs. The Discharger has requested an increase in design flow to 16 mgd. Therefore, using the estimated harmonic mean flow, excluding the wet years, and the future design flow, the maximum allowable harmonic dilution is 20:1.

DSM2, which has been used extensively for the South Delta Improvement Project, was also used to model the Tracy discharge to evaluate the salinity impacts of the discharge. Several factors influence the flow and dilution in the South Delta, including barrier operations, San Joaquin River (SJR) flow, Central Valley Project and State Water Project export pumping, delta tides, etc. During development of the previous permit a stakeholder group was formed that included representatives from the City of Tracy, Mountain House Community Services District, South Delta Water Agency, California Sportfishing Protection Alliance, DWR, and the Central Valley Water Board to

develop appropriate scenarios for running the DSM2 model. The model was run under reasonable worst-case conditions and was used to predict the effluent volume fraction or effluent "finger printing" in the receiving water at given locations. The daily average wastewater volume fractions and the 15-minute flow and stage within the river channels were estimated at several select locations. The DWR modelers recommended evaluating the model output data on a minimum monthly average basis. This was recommended because several inputs to the model were set constant, such as SJR flow, agricultural inflow/outflow, and wastewater discharge rates. Therefore, the monthly average outputs are likely to be more accurate than shorter averaging periods (e.g., daily or weekly).

Although the intended use of the model was to evaluate the salinity impacts, the model output is also appropriate for determining the amount of human health dilution and the size of the human health mixing zone. Adverse human health effects from carcinogens are based on long-term exposure (e.g., drinking 2 liters per day for 70 years), and the CTR criteria are based on a 30-day averaging period therefore, the monthly average model outputs are appropriate. The permit allows a dilution of 20:1 for human carcinogens based on the harmonic mean flow in Old River of 492 cfs. Using the reasonable worst-case modeling scenarios, DSM2 estimated the flow in Old River upstream of the discharge to be in the same range as the harmonic mean flow used to calculate the human carcinogen dilution credit. The average Old River flow estimated by the DSM2 model was 505 cfs with high exports and 491 cfs with low exports.

With a dilution credit of 20:1, the effluent volume fraction would be approximately 5%. As shown in Table F-6 below, an effluent fraction of 5% occurs 1 mile downstream of the discharge. Therefore, the human carcinogen mixing zone extends no more than 1 mile downstream of the discharge. Old River in the vicinity of the discharge is tidal and experiences reverse flows. Based on the model output, the human carcinogen mixing zone extends less than 0.5 miles upstream of the discharge. Modeling nodes closer to the discharge were not modeled, so it is not possible to determine the exact location of the upstream edge of the mixing zone. However, even if it were the full 0.5 miles upstream the impacts would be insignificant, because there are no drinking water or agricultural intakes within the mixing zone. The nearest drinking water intakes are the CVP and SWP, which are approximately 10 miles downstream of the discharge. Thus, a dilution credit of 20:1 for human carcinogens is appropriate and reasonable. Human health carcinogen criteria dilution credits have been used in the calculation of the WQBELs for chlorodibromomethane, dichlorobromomethane, and bis(2-ethylhexyl)phthalate.

Table F-6. Maximum Rolling 30-Day Average Effluent Volume Fractions (% Effluent)

16 mgd Discharge Permanent Barriers Installed	High Exports	Low Exports	Aprox. Distance from Outfall
Old River 0.5 mi. Upstream of Outfall	0.5	0.4	0.5 miles upstream of outfall
Old River 1 mi. Downstream of Outfall	**5.0**	**4.5**	1 mile downstream of outfall
Old River at Tracy Rd	0.1	2.9	4 miles downstream of outfall
Grant Line Canal at Tracy Rd	4.3	4.6	2 miles downstream of outfall
Grant Line Canal at barrier	3.5	3.8	8 miles downstream of outfall
Channel Near CVP Pumps	0.5	2.0	10 miles downstream of outfall
Clifton Court Forebay (SWP Pumps)	0.0	0.2	10 miles downstream of outfall

Chlorodibromomethane and Dichlorobromomethane. For chlorodibromomethane and dichlorobromomethane, a 20:1 dilution credit was used in the calculation of WQBELs in this Order. In this case, the Central Valley Water Board finds the WQBELs in this Order require the Facility to implement BPTC for these constituents and the human health carcinogen criteria mixing zone is as small as practicable.

Bis(2-ethylhexyl)phthalate. For bis(2-ethylhexyl)phthalate, the WQBELs based on a 20:1 dilution credit are an average monthly effluent limit (AMEL) and maximum daily effluent limit (MDEL) of 30 µg/L and 92 µg/L, respectively. Section 1.4.2.2 of the SIP requires that mixing zones are as small as practicable. Section 1.4.2.2.B of the SIP, in part states, *"The RWQCB shall deny or significantly limit a mixing zone and dilution credits as necessary to protect beneficial uses, meet the conditions of this Policy, or comply with other regulatory requirements."* Based on existing Facility performance, the Facility can meet WQBELs calculated using a dilution credit of 7.5:1 (i.e., AMEL of 12 µg/L and MDEL of 49 µg/L), which correlates to a significantly smaller mixing zone. Based on modeling by the discharger this level of dilution would occur in the zone of initial dilution that would extend a maximum of 150 feet of the outfall. This represents a mixing zone that is as small as practicable for this Facility and that fully complies with the SIP.

Furthermore, the Central Valley Water Board finds that granting of the full dilution credits could allocate an unnecessarily large portion of the receiving water's assimilative capacity for bis(2-ethylhexyl)phthalate and could violate the Antidegradation Policy. Although the Antidegradation Policy does not apply within a mixing zone, the allowance of a mixing zone allows an increase in the discharge of pollutants. Therefore, when a mixing zone and dilution credits are allowed, it is necessary to ensure the discharge complies with the Antidegradation Policy outside the mixing zone. The Antidegradation Policy requires that any activity which produces a waste or increased volume or concentration of waste which discharges to existing high quality waters is

required to meet waste discharge requirements that result inBPTC, which in this case for bis(2-ethylhexyl)phthalate is, at minimum, existing facility performance. Allowing the full dilution credit would allow the Discharger to increase its loading of bis(2-ethylhexyl)phthalate to the Old River and reduce the treatment and/or control of the pollutant. Allowing the Discharger to reduce the level of treatment and/or control would not comply with the BPTC requirements of the Antidegradation Policy.

In this case, the Central Valley Water Board finds this Order includes requirements that ensure the Facility is providing BPTC for these constituents and the human health carcinogen criteria mixing zones are as small as practicable.

vii. **Regulatory Compliance for Dilution Credits and Mixing Zones.** To fully comply with all applicable laws, regulations and policies of the State, Central Valley Water Board approved a mixing zone and the associated dilution credits, shown in Table F-6, based on the following:

- Mixing zones are allowed under the SIP provided all elements contain in Section 1.4.2.2 are met. Based on the mixing zone study conducted by the Discharger the Central Valley Water Board has determined that these factors are met.

- Section 1.4.2.2.of the SIP requires mixing zones to be as small as practicable. Based on the mixing zone study conducted by the Discharger the Central Valley Water Board has determined the mixing zones are as small as practicable.

- In accordance with Section 1.4.2.2 of the SIP, the Central Valley Water Board has determined the mixing zones are as small as practicable, will not compromise the integrity of the entire water body, restrict the passage of aquatic life, dominate the water body or overlap existing mixing zones from different outfalls. The mixing zones are small relative to the large size of the receiving water, are not at or near a drinking water intake, and do not overlap a mixing zone from a different outfall.

- The Central Valley Water Board is allowing mixing zones for human carcinogen criteria only and has determined allowing such mixing zones will not cause acutely toxic conditions to aquatic life passing through the mixing zones.

- The Central Valley Water Board has determined the discharge will not adversely impact biologically sensitive or critical habitats, including, but not limited to, habitat of species listed under the federal or State endangered species laws, because the mixing zones are for human carcinogen criteria only, are relatively small, and acutely toxic conditions will not occur in the mixing zones. The discharge will not

produce undesirable or nuisance aquatic life, result in floating debris, oil, or scum, produce objectionable odor, taste, or turbidity, cause objectionable bottom deposits, or cause nuisance, because the Order establishes end-of-pipe effluent limitations (e.g., for ammonia, BOD_5, and TSS) and discharge prohibitions to prevent these conditions from occurring.

- As required by the SIP, in determining the extent of or whether to allow mixing zones and dilution credits, the Central Valley Water Board has considered the presence of pollutants in the discharge that are carcinogenic, mutagenic, teratogenic, persistent, bioaccumulative, or attractive to aquatic organisms, and concluded that the allowance of the mixing zones and dilution credits are adequately protective of the beneficial uses of the receiving water.

- The Central Valley Water Board has determined the mixing zones comply with the SIP for priority pollutants.

- The mixing zone study indicates the maximum allowed dilution factor for CTR human carcinogen criteria to be 20:1. Section 1.4.2.2.B of the SIP, in part states, *"The RWQCB shall deny or significantly limit a mixing zone and dilution credits as necessary to protect beneficial uses, meet the conditions of this Policy, or comply with other regulatory requirements."* The Central Valley Water Board has determined the full dilution factor of 20:1 is not needed or necessary for bis(2-ethylhexyl)phthalate and the Facility is capable of achieving compliance based on a dilution factor of 7.5:1.

- The Central Valley Water Board has determined that for bis(2-ethylhexyl)phthalate allowing a dilution factor that exceeds those allowed in this Order would not comply with the State Anti-degradation Policy for receiving waters outside the allowable mixing zone. The State Water Board established California's antidegradation policy in State Water Board Resolution No. 68-16. Resolution No. 68-16 incorporates the federal antidegradation policy and requires that existing quality of waters be maintained unless degradation is justified based on specific findings. Item 2 of Resolution 68-16 states:

  "Any activity which produces or may produce a waste or increased volume or concentration of waste and which dischargers or proposed to discharge to existing high quality waters will be required to meet waste discharge requirements which will result in the best practicable treatment or control of the discharge necessary to assure that (a) a pollution or nuisance will not occur and (b) the highest water quality consistent with maximum benefit to the people of the State will be maintained."

The effluent limitations established in the Order for bis(2-ethylyhexyl)phthalate that have been adjusted based on a dilution credit of 7.5:1 were developed based on performance of the Discharger's current wastewater treatment capabilities. Therefore, the Central Valley Water Board determined the effluent limitations required by this Order will result in the Discharger implementing best practicable treatment or control of the discharge necessary to assure that pollution or nuisance will not occur and the highest water quality consistent with maximum benefit to the people of the State will be maintained. The Central Valley Water Board also determined the Discharger will be in immediate compliance with the effluent limitations,

The Central Valley Water Board also determined establishing effluent limitations for bis(2-ethylyhexyl)phthalate that have been adjusted using a dilution credit of 7.5:1 is consistent with Section 1.4.2.2.B of the SIP that requires the Central Valley Water Board shall deny or significantly limit a mixing zone and dilution credits as necessary to comply with other regulatory requirements.

- Therefore, the Central Valley Water Board has determined the effluent limitations established in the Order for bis(2-ethylyhexyl)phthalate that have been developed using a dilution credit of 7.5:1 are appropriate and necessary to comply with the Basin Plan, SIP, Federal anti-degradation regulations and Resolution 68-16.

d. Conversion Factors. The CTR contains aquatic life criteria for arsenic, cadmium, chromium III, chromium VI, copper, lead, nickel, silver, and zinc which are presented in dissolved concentrations. USEPA recommends conversion factors to translate dissolved concentrations to total concentrations. The default USEPA conversion factors contained in Appendix 3 of the SIP were used to convert the applicable dissolved criteria to total recoverable criteria. There have been no approved studies to evaluate discharge-specific metal translators for the discharge to Old River. Therefore, default USEPA translators have been used for reasonable potential analysis and effluent limitation derivation for metals. Where default USEPA translators are not available, a translator of 1.0 has been used.

e. Hardness-Dependent CTR Metals Criteria. The *California Toxics Rule* and the *National Toxics Rule* contain water quality criteria for seven metals that vary as a function of hardness. The lower the hardness the lower the water quality criteria. The metals with hardness-dependent criteria include cadmium, copper, chromium III, lead, nickel, silver, and zinc.

This Order has established the criteria for hardness-dependent metals based on the reasonable worst-case ambient hardness as required by the SIP[6], the CTR[7] and State Water Board Order WQO 2008-0008 (City of Davis). The SIP and the CTR require the use of "receiving water" or "actual ambient" hardness, respectively, to determine effluent limitations for these metals. (SIP, § 1.2; 40 CFR § 131.38(c)(4)) The CTR does not define whether the term "ambient," as applied in the regulations, necessarily requires the consideration of upstream as opposed to downstream hardness conditions. Therefore, where reliable, representative data are available, the hardness value for calculating criteria can be the downstream receiving water hardness, after mixing with the effluent (Order WQO 2008-0008, p. 11). The Central Valley Water Board thus has considerable discretion in determining ambient hardness (*Id.*, p.10).

As discussed below, scientific literature provides a reliable method for calculating protective hardness-dependent CTR criteria, considering all discharge conditions. This methodology produces hardness-dependent CTR criteria based on the reasonable worst-case downstream ambient hardness that ensure these metals do not cause receiving water toxicity under any downstream receiving water condition. Under this methodology, the Central Valley Water Board considers all hardness conditions that could occur in the ambient downstream receiving water after the effluent has mixed with the water body[8]. This ensures that effluent limitations are fully protective of aquatic life in all areas of the receiving water affected by the discharge under all flow conditions, at the fully mixed location, and throughout the water body including at the point of discharge into the water body.

i. **Conducting the Reasonable Potential Analysis (RPA).** The SIP in Section 1.3 states, "The RWQCB shall…determine whether a discharge may: (1) cause, (2) have a reasonable potential to cause, or (3) contribute to an excursion above any applicable priority pollutant criterion or objective." Section 1.3 provides a step-by-step procedure for conducting the RPA. The procedure requires the comparison of the Maximum Effluent Concentration (MEC) and Maximum Ambient Background Concentration to the applicable criterion that has been properly adjusted for hardness. Unless otherwise noted, for the hardness-dependent CTR metals criteria the following procedures were followed for properly adjusting the criterion for hardness when conducting the RPA.

a) The SIP requires water quality-based effluent limitations (WQBELs) if the MEC is equal to or exceeds the applicable criterion, adjusted for

[6] The SIP does not address how to determine the hardness for application to the equations for the protection of aquatic life when using hardness-dependent metals criteria. It simply states, in Section 1.2, that the criteria shall be properly adjusted for hardness using the hardness of the receiving water.

[7] The CTR requires that, for waters with a hardness of 400 mg/L (as $CaCO_3$), or less, the actual ambient hardness of the surface water must be used. It further requires that the hardness values used must be consistent with the design discharge conditions for design flows and mixing zones.

[8] All effluent discharges will change the ambient downstream metals concentration and hardness. It is not possible to change the metals concentration without also changing the hardness.

hardness. For comparing the MEC to the applicable criterion, the "fully mixed" reasonable worst-case downstream ambient hardness was used to adjust the criterion. In this evaluation the portion of the receiving water affected by the discharge is analyzed. For hardness-dependent criteria, the hardness of the effluent has an impact on the determination of the applicable criterion in areas of the receiving water affected by the discharge. Therefore, for comparing the MEC to the applicable criterion, the reasonable worst-case downstream ambient hardness was used to adjust the criterion. For this situation it is necessary to consider the hardness of the effluent in determining the applicable hardness to adjust the criterion. The procedures for determining the applicable criterion after proper adjustment using the reasonable worst-case downstream ambient hardness is outlined in subsection ii, below.

b) The SIP requires WQBELs if the receiving water is impaired upstream (outside the influence) of the discharge, i.e., if the Maximum Ambient Background Concentration of a pollutant exceeds the applicable criterion, adjusted for hardness[9]. For comparing the Maximum Ambient Background Concentration to the applicable criterion, the reasonable worst-case upstream ambient hardness was used to adjust the criteria. This is appropriate, because this area is outside the influence of the discharge. Since the discharge does not impact the upstream hardness, the effect of the effluent hardness was not included in this evaluation.

ii. Calculating Water Quality-Based Effluent Limitations. The remaining discussion in this section relates to the development of WQBELs when it has been determined that the discharge has reasonable potential to cause or contribute to an exceedance of the CTR hardness-dependent metals criteria in the receiving water.

A 2006 Study[10] developed procedures for calculating the effluent concentration allowance (ECA)[11] for CTR hardness-dependent metals. The 2006 Study demonstrated that it is necessary to evaluate all discharge conditions (e.g. high and low flow conditions) and the hardness and metals concentrations of the effluent and receiving water when determining the appropriate ECA for these hardness-dependent metals. This method is superior to relying on downstream receiving water samples alone because it captures all possible mixed conditions in the receiving water. Both receiving water and effluent hardness vary based on flow and other factors, but the variability of receiving water and effluent hardness is

[9] The pollutant must also be detected in the effluent.
[10] Emerick, R.W.; Borroum, Y.; & Pedri, J.E., 2006. California and National Toxics Rule Implementation and Development of Protective Hardness Based Metal Effluent Limitations. WEFTEC, Chicago, Ill.
[11] The ECA is defined in Appendix 1 of the SIP (page Appendix 1-2). The ECA is used to calculate WQBELs in accordance with Section 1.4 of the SIP.

sometimes independent. Using a calculated hardness value ensures that the Central Valley Water Board considers all possible mixed downstream values that may result from these two independent variables. Relying on receiving water sampling alone is less likely to capture all possible mixed downstream conditions.

The equation describing the total recoverable regulatory criterion, as established in the CTR[12], is as follows:

$$\text{CTR Criterion} = \text{WER} \times (e^{m[\ln(H)]+b}) \qquad \text{(Equation 1)}$$

Where:

H = hardness (as $CaCO_3$)[13]
WER = water-effect ratio
m, b = metal- and criterion-specific constants

In accordance with the CTR, the default value for the WER is 1. A WER study must be conducted to use a value other than 1. The constants "m" and "b" are specific to both the metal under consideration, and the type of total recoverable criterion (i.e., acute or chronic). The metal-specific values for these constants are provided in the CTR at paragraph (b)(2), Table 1.

The equation for the ECA is defined in Section 1.4, Step 2, of the SIP and is as follows:

$$\text{ECA} = C \qquad (\text{when } C \leq B)^{14} \qquad \text{(Equation 2)}$$

Where:

C = the priority pollutant criterion/objective, adjusted for hardness (see Equation 1, above)

B = the ambient background concentration

The 2006 Study demonstrated that the relationship between hardness and the calculated criteria is the same for some metals, so the same procedure for calculating the ECA may be used for these metals. The same procedure can be used for chronic cadmium, chromium III, copper, nickel, and zinc. These metals are hereinafter referred to as "Concave Down Metals". "Concave Down" refers to the shape of the curve represented by the relationship between hardness and the CTR criteria in Equation 1. Another similar procedure can be used for determining the

[12] 40 CFR § 131.38(b)(2).
[13] For this discussion, all hardness values are in mg/L as $CaCO_3$.
[14] The 2006 Study assumes the ambient background metals concentration is equal to the CTR criterion (i.e. C ≤ B)

ECA for acute cadmium, lead, and acute silver, which are referred to hereafter as "Concave Up Metals".

ECA for Chronic Cadmium, Chromium III, Copper, Nickel, and Zinc – For Concave Down Metals (i.e., chronic cadmium, chromium III, copper, nickel, and zinc) the 2006 Study demonstrates that when the effluent is in compliance with the CTR criteria and the upstream receiving water is in compliance with the CTR criteria, any mixture of the effluent and receiving water will always be in compliance with the CTR criteria[15]. The 2006 Study proves that regardless of whether the effluent hardness is lower or greater than the upstream hardness, the reasonable worst-case flow condition is the effluent dominated condition (i.e., no receiving water flow)[16]. Consequently, for Concave Down Metals, the CTR criteria have been calculated using the downstream ambient hardness under this condition.

The effluent hardness ranged from 200 mg/L to 348 mg/L, based on 13 samples from July 1998 to September 2011. The upstream receiving water hardness varied from 35 mg/L to 225 mg/L, based on 42 samples from August 2008 to December 2011, and the downstream receiving water hardness varied from 40 mg/L to 225 mg/L, during the same period. Under the effluent dominated condition, the reasonable worst-case downstream ambient hardness is 200 mg/L. As demonstrated in the example shown in Table F-7, below, using this hardness to calculate the ECA for all Concave Down Metals will result in WQBELs that are protective under all flow conditions, from the effluent dominated condition to high flow condition. This example for zinc assumes the following conservative conditions for the upstream receiving water:

- Upstream receiving water <u>always</u> at the lowest observed upstream receiving water hardness (i.e., 35 mg/L)
- Upstream receiving water zinc concentration <u>always</u> at the CTR criteria (i.e., no assimilative capacity).

Using these reasonable worst-case receiving water conditions, a simple mass balance (as shown in Equation 3, below) accounts for all possible mixtures of effluent and receiving water under all flow conditions.

$$C_{MIX} = C_{RW} \times (1\text{-}EF) + C_{Eff} \times (EF) \qquad \text{(Equation 3)}$$

[15] 2006 Study, p. 5700

[16] There are two typographical errors in the 2006 Study in the discussion of Concave Down Metals when the effluent hardness is less than the receiving water hardness. The effluent and receiving water hardness were transposed in the discussion, but the correct hardness values were used in the calculations. The typographical errors were confirmed by the author of the 2006 Study, by email dated 1 April 2011, from Dr. Robert Emerick to Mr. James Marshall, Central Valley Water Board.

Where:

C_{MIX} = Mixed concentration (e.g. metals or hardness)
C_{RW} = Upstream receiving water concentration
C_{Eff} = Effluent concentration
EF = Effluent Fraction

In this example, for zinc, for any receiving water flow condition (high flow to low flow), the fully-mixed downstream ambient zinc concentration is in compliance with the CTR criteria.[17]

Table F-7. Zinc ECA Evaluation

Lowest Observed Effluent Hardness					**200 mg/L (as $CaCO_3$)**
Lowest Observed Upstream Receiving Water Hardness					**35 mg/L (as $CaCO_3$)**
Highest Assumed Upstream Receiving Water Zinc Concentration					**14.0 µg/L[1]**
Zinc $ECA_{chronic}$[2]					**215.6 µg/L**
Effluent Fraction[6]		**Fully Mixed Downstream Ambient Concentration**			
		Hardness[3] (mg/L)	**CTR Criteria[4] (µg/L)**	**Zinc[5] (µg/L)**	**Complies with CTR Criteria**
High Flow	1%	36.65	51.2	50.9	**Yes**
	5%	43.25	58.9	57.5	**Yes**
	15%	59.75	77.4	74.2	**Yes**
	25%	76.25	95.2	90.8	**Yes**
	50%	117.5	137.4	132.4	**Yes**
	75%	158.75	177.2	174.0	**Yes**
Low Flow	100%	200	215.6	215.6	**Yes**

1 Highest assumed upstream receiving water zinc concentration calculated using Equation 1 for chronic criterion at a hardness of 35 mg/L.

2 ECA calculated using Equation 1 for chronic criterion at a hardness of 200 mg/L.

3 Fully mixed downstream ambient hardness is the mixture of the receiving water and effluent hardness at the applicable effluent fraction using Equation 3.

4 Fully mixed downstream ambient criteria are the chronic criteria calculated using Equation 1 at the mixed hardness.

5 Fully mixed downstream ambient zinc concentration is the mixture of the receiving water and effluent zinc concentrations at the applicable effluent fraction using Equation 3.

6 The effluent fraction ranges from 1% at the high receiving water flow condition, to 100% at the lowest receiving water flow condition (i.e., effluent dominated).

As discussed above, the receiving water at times contains concentrations of copper that exceed water quality criteria associated with the hardness

[17] This method considers the actual lowest observed upstream hardness and actual lowest observed effluent hardness to determine the reasonable worst-case ambient downstream hardness under all possible receiving water flow conditions. Table F-7 demonstrates that the receiving water is always in compliance with the CTR criteria at the fully-mixed location in the receiving water. It also demonstrates that the receiving water is in compliance with the CTR criteria for all mixtures from the point of discharge to the fully-mixed location. Therefore, a mixing zone is not used for compliance.

condition previous to the discharge. The 2006 study procedures remain applicable under these conditions. The discharge cannot cause or contribute to a violation of water quality criteria/objectives in the receiving water. Although metals concentrations downstream of the discharge exceed CTR criteria, the cause of the exceedance is not due to the discharge, it is due to the elevated metals concentrations upstream of the discharge. Implementing the procedures of the 2006 study does not result in an increase in toxicity downstream of the discharge, and in fact reduces the amount of toxicity already present in the receiving water. This is demonstrated in the example below for copper (see Table F-4a).

As shown in Table F-7a for copper, prior to the discharge the copper has been observed to exceed water quality criteria by up to 84%. When the receiving water contains some fraction of effluent, the percent exceedance is reduced. The greater the amount of effluent in the receiving water, the lower the percent exceedance, until a fully compliant state is achieved when the effluent constitutes the entire flow. The effluent limitation associated with copper, therefore, was sufficient to assure that the discharge never causes or contributes to a violation of a water quality criterion, and in fact reduces the amount of toxicity already present in the receiving water.

Table F-7a. Copper ECA Evaluation

Lowest Observed Effluent Hardness					**200 mg/L (as $CaCO_3$)**
Lowest Observed Upstream Receiving Water Hardness					**35 mg/L (as $CaCO_3$)**
Highest Observed Upstream Receiving Water Copper Concentration					**7.0 µg/L[1]**
Copper $ECA_{chronic}$[2]					**16.9 µg/L**
Effluent Fraction[6]		**Fully Mixed Downstream Ambient Concentration**			
		Hardness[3] (mg/L)	**CTR Criteria[4] (µg/L)**	**Copper[5] (µg/L)**	**Percent Exceeding Criterion**
High Flow	0%	35	3.8	7.0	84%
	1%	36.65	4.0	7.1	79%
	5%	43.25	4.6	7.5	64%
	15%	59.75	6.0	8.5	41%
	25%	76.25	7.4	9.5	28%
	50%	117.5	10.7	11.9	11%
	75%	158.75	13.8	14.4	4%
Low Flow	100%	200	16.9	16.9	0%

1 Highest assumed upstream receiving water copper concentration calculated using Equation 1 for chronic criterion at a hardness of 35 mg/L.

2 ECA calculated using Equation 1 for chronic criterion at a hardness of 200 mg/L.

3 Fully mixed downstream ambient hardness is the mixture of the receiving water and effluent hardness at the applicable effluent fraction using Equation 3.

4 Fully mixed downstream ambient criteria are the chronic criteria calculated using Equation 1 at the mixed hardness.

5 Fully mixed downstream ambient copper concentration is the mixture of the receiving water

and effluent copper concentrations at the applicable effluent fraction using Equation 3.

[6] The effluent fraction ranges from 0% at the high receiving water flow condition, to 100% at the lowest receiving water flow condition (i.e., effluent dominated).

ECA for Acute Cadmium, Lead, and Acute Silver – For Concave Up Metals (i.e., acute cadmium, lead, and acute silver), the relationship between hardness and the metals criteria is different than for Concave Down Metals. The 2006 Study demonstrates that for Concave Up Metals, the effluent and upstream receiving water can be in compliance with the CTR criteria, but the resulting mixture may contain metals concentrations that exceed the CTR criteria and could cause toxicity. For these metals, the 2006 Study provides a mathematical approach to calculate the ECA that is protective of aquatic life, in all areas of the receiving water affected by the discharge, under all discharge and receiving water flow conditions (see Equation 4, below).

The ECA, as calculated using Equation 4, is based on the reasonable worst-case upstream receiving water hardness, the lowest observed effluent hardness, and assuming no receiving water assimilative capacity for metals (i.e., ambient background metals concentrations are at their respective CTR criterion). Equation 4 is not used in place of the CTR equation (Equation 1). Rather, Equation 4, which is derived using the CTR equation, is used as a direct approach for calculating the ECA. This replaces an iterative approach for calculating the ECA. The CTR equation has been used to evaluate the receiving water downstream of the discharge at all discharge and flow conditions to ensure the ECA is protective (e.g., see Table F-8).

$$\text{ECA} = \left(\frac{m\left(H_e - H_{rw}\right)\left(e^{m\{\ln(H_{rw})\}+b}\right)}{H_{rw}} \right) + e^{m\{\ln(H_{rw})\}+b} \qquad \text{(Equation 4)}$$

Where:

m, b = criterion specific constants (from CTR)

H_e = lowest observed effluent hardness

H_{rw} = reasonable worst-case upstream receiving water hardness

An example similar to the Concave Down Metals is shown for cadmium, a Concave Up Metal, in Table F-8, below. As previously mentioned, the lowest effluent hardness is 200 mg/L, while the upstream receiving water hardness ranged from 35 mg/L to 225 mg/L, and the downstream receiving water hardness ranged from 40 mg/L to 225 mg/L.

Using the procedures discussed above to calculate the ECA for all Concave Up Metals will result in WQBELs that are protective under all potential effluent/receiving water flow conditions (high flow to low flow) and under all known hardness conditions, as demonstrated in Table F-8, for cadmium.

Table F-8. Cadmium ECA Evaluation

Lowest Observed Effluent Hardness					**200 mg/L**
Reasonable Worst-case Upstream Receiving Water Hardness					**35 mg/L**
Reasonable Worst-case Upstream Receiving Water Cadmium Concentration					**0.05 µg/L[1]**
Cadmium $ECA_{chronic}$[2]					**4.24 µg/L**
Effluent Fraction[6]		**Fully Mixed Downstream Ambient Concentration**			
		Hardness[3] (mg/L) (as $CaCO_3$)	**CTR Criteria[4] (µg/L)**	**Cadmium[5] (µg/L)**	**Complies with CTR Criteria**
High Flow	1%	36.7	1.1	1.1	**Yes**
	5%	43.3	1.3	1.2	**Yes**
	15%	59.8	1.6	1.6	**Yes**
	25%	76.3	2.0	1.9	**Yes**
	50%	117.5	2.8	2.7	**Yes**
	75%	158.8	3.5	3.5	**Yes**
Low Flow	100%	200.0	4.2	4.2	**Yes**

1 Reasonable worst-case upstream receiving water cadmium concentration calculated using Equation 1 for chronic criterion at a hardness of 200 mg/L.

2 ECA calculated using Equation 4 for chronic criteria.

3 Fully mixed downstream ambient hardness is the mixture of the receiving water and effluent hardness at the applicable effluent fraction.

4 Fully mixed downstream ambient criteria are the chronic criteria calculated using Equation 1 at the mixed hardness.

5 Fully mixed downstream ambient cadmium concentration is the mixture of the receiving water and effluent lead concentrations at the applicable effluent fraction.

6 The effluent fraction ranges from 1% at the high receiving water flow condition, to 100% at the lowest receiving water flow condition (i.e., effluent dominated).

As discussed above, the receiving water at times contains concentrations of lead that exceed water quality criteria associated with the hardness condition previous to the discharge. The 2006 study procedures remain applicable under these conditions. The discharge cannot cause or contribute to a violation of water quality criteria/objectives in the receiving water. Although metals concentrations downstream of the discharge exceed CTR criteria, the cause of the exceedance is not due to the discharge, it is due to the elevated metals concentrations upstream of the discharge. Implementing the procedures of the 2006 study does not result in an increase in toxicity downstream of the discharge, and in fact reduces

the amount of toxicity already present in the receiving water. This is demonstrated in the example below for lead (see Table F-8a).

As shown in Table F-8a for lead, prior to the discharge the lead has been observed to exceed water quality criteria by up to 79%. When the receiving water contains some fraction of effluent, the percent exceedance is reduced. The greater the amount of effluent in the receiving water, the lower the percent exceedance, until a fully compliant state is achieved when the effluent constitutes the entire flow. The effluent limitation associated with lead, therefore, was sufficient to assure that the discharge never causes or contributes to a violation of a water quality criterion, and in fact reduces the amount of toxicity already present in the receiving water.

Table F-8a. Lead ECA Evaluation

Lowest Observed Effluent Hardness	**200 mg/L (as $CaCO_3$)**
Lowest Observed Upstream Receiving Water Hardness	**35 mg/L (as $CaCO_3$)**
Highest Observed Upstream Receiving Water Lead Concentration	**µg/L[1]**
Lead $ECA_{chronic}$[2]	**5.85 µg/L**

Effluent Fraction[6]		**Fully Mixed Downstream Ambient Concentration**			
		Hardness[3] (mg/L)	**CTR Criteria[4] (µg/L)**	**Lead[5] (µg/L)**	**Percent Exceeding Criterion**
High Flow	0%	35	0.84	1.50	79%
	1%	36.65	0.89	1.54	74%
	5%	43.25	1.09	1.72	57%
	15%	59.75	1.65	2.15	30%
	25%	76.25	2.25	2.59	15%
	50%	117.5	3.91	3.68	-6%
	75%	158.75	5.73	4.76	-17%
Low Flow	100%	200	7.69	5.85	-24%

1 Highest assumed upstream receiving water lead concentration calculated using Equation 1 for chronic criterion at a hardness of 35 mg/L.

2 ECA calculated using Equation 1 for chronic criterion at a hardness of 200 mg/L.

3 Fully mixed downstream ambient hardness is the mixture of the receiving water and effluent hardness at the applicable effluent fraction using Equation 3.

4 Fully mixed downstream ambient criteria are the chronic criteria calculated using Equation 1 at the mixed hardness.

5 Fully mixed downstream ambient copper concentration is the mixture of the receiving water and effluent copper concentrations at the applicable effluent fraction using Equation 3.

6 The effluent fraction ranges from 0% at the high receiving water flow condition, to 100% at the lowest receiving water flow condition (i.e., effluent dominated).

Based on the procedures discussed above, Table F-9 lists all the CTR hardness-dependent metals and the associated ECA used in this Order.

Table F-9. Summary of ECA Evaluations for CTR Hardness-dependent Metals

CTR Metals	ECA (µg/L, total recoverable)	
	acute	chronic
Copper	27	17
Chromium III	3063	365
Cadmium	8.7	4.2
Lead	150	5.9
Nickel	843	94
Silver	6.1	--
Zinc	216	216

Figure F-1
South Delta Temporary Barrier Locations

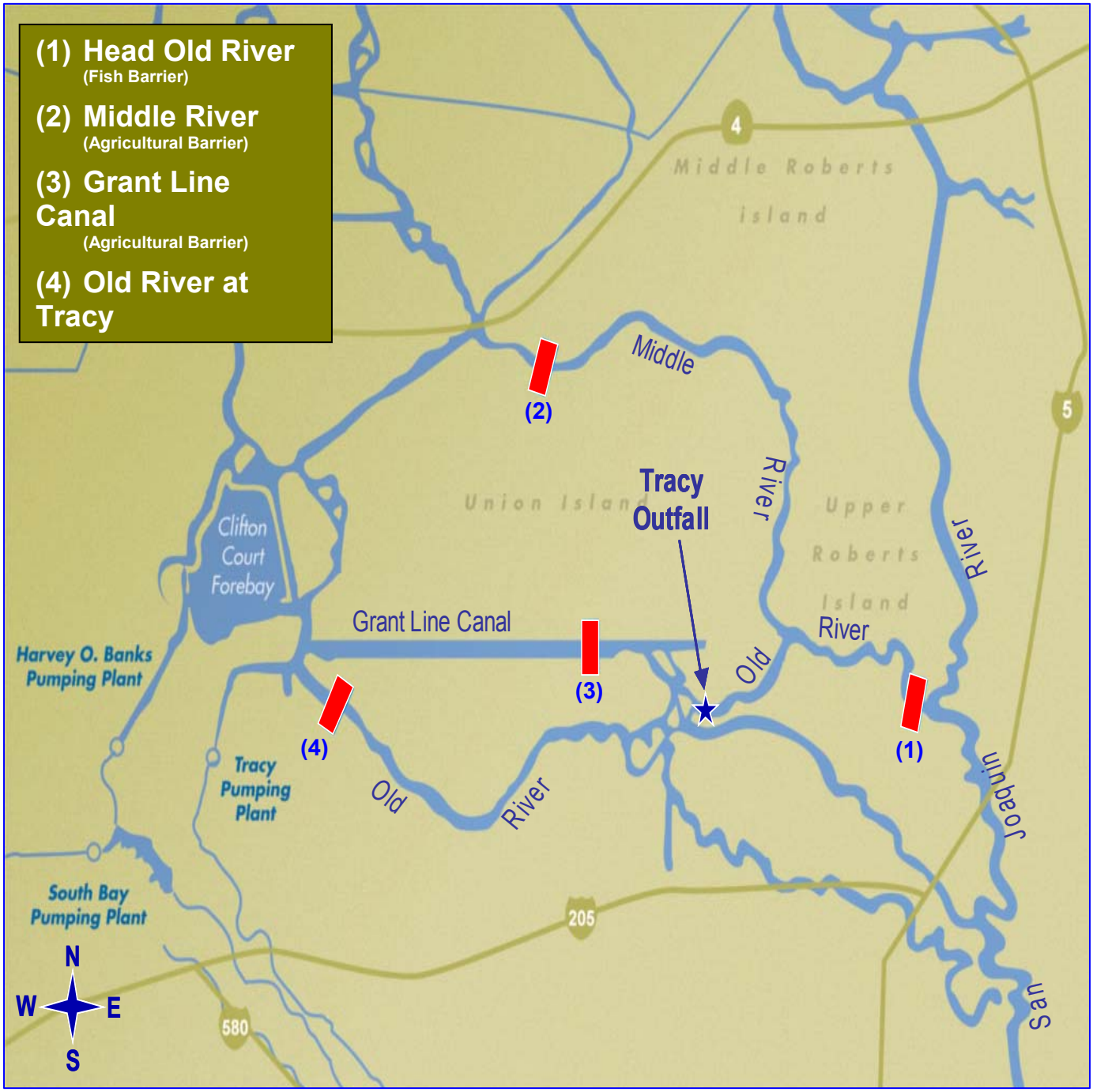

3. Determining the Need for WQBELs

a. The Central Valley Water Board conducted the reasonable potential analysis (RPA) in accordance with section 1.3 of the SIP. Although the SIP applies directly to the control of CTR priority pollutants, the State Water Board has held that the Regional Water Boards may use the SIP as guidance for water quality-based toxics control.[18] The SIP states in the introduction "*The goal of this Policy is to establish a standardized approach for permitting discharges of toxic pollutants to non-ocean surface waters in a manner that promotes statewide consistency*." Therefore, unless otherwise specified, in this Order the RPA procedures from the SIP were used to evaluate reasonable potential for both CTR and non-CTR constituents based on information submitted as part of the application, in studies, and as directed by monitoring and reporting programs.

b. Constituents with No Data or Insufficient Data. Reasonable potential cannot be determined for the following constituents because effluent data and ambient background concentrations are not available or insufficient.

i. Diazinon and Chlorpyrifos

(a) WQO. A TMDL was adopted for chlorpyrifos and diazinon for the Delta and established site-specific Basin Plan water quality objectives for chlorpyrifos of 0.025 µg/L as a 1-hour average and 0.015 µg/L as a 4-day average and diazinon of 0.16 µg/L as a 1-hour average and 0.10 µg/L as a 4-day average for Delta Waterways as specified in, Appendix 42 of Basin Plan, which includes Old River. The TMDL also established waste load allocations for NPDES dischargers that are included in the Basin Plan on page IV-36.03.01 and states that "[C]*ompliance with the applicable water quality objectives, load allocations, and waste load allocations for diazinon and chlorpyrifos in the Delta Waterways is required by December 1, 2011.*"

(b) RPA Results. The Discharger has not sampled the effluent or receiving water for diazinon or chlorpyrifos, therefore, a RPA cannot be conducted for these constituents.

(c) WQBELs. Although an RPA cannot be conducted due to no data, in accordance with 40 CFR 122.44(d)(1)(vii)(B), WQBELs for chlorpyrifos and diazinon are required based on the TMDL for diazinon and chlorpyrifos for the Delta . Therefore, this Order includes effluent limits calculated based on the waste load allocations contained in the TMDL, as follows:

Effluent chlorpyrifos and diazinon concentrations shall not exceed the sum of one as defined below:

[18] See Order WQO 2001-16 (Napa) and Order WQO 2004-0013 (Yuba City).

i. Average Monthly Effluent Limit

$$S_{AMEL} = \frac{C_{D\text{-}avg}}{0.08} + \frac{C_{C\text{-}avg}}{0.012} \leq 1.0$$

$C_{D\text{-}avg}$ = average monthly diazinon effluent concentration in µg/L
$C_{C\text{-}avg}$ = average monthly chlorpyrifos effluent concentration in µg/L

ii. Maximum Daily Effluent Limit

$$S_{MDEL} = \frac{C_{D\text{-}max}}{0.16} + \frac{C_{C\text{-}max}}{0.025} \leq 1.0$$

$C_{D\text{-}max}$ = maximum daily diazinon effluent concentration in µg/L
$C_{C\text{-}max}$ = maximum daily chlorpyrifos effluent concentration in µg/L

(d) Plant Performance and Attainability. There is no expectation that diazinon and chlorpyrifos will be in the Facility's discharge because these pesticides have been banned. The Central Valley Water Board concludes that immediate compliance with these effluent limitations is feasible.

ii. Lead

(a) WQO. The CTR includes hardness-dependent criteria for the protection of freshwater aquatic life for lead. These criteria for lead are presented in dissolved concentrations. USEPA recommends conversion factors to translate dissolved concentrations to total concentrations. Default USEPA translators were used in this Order.

(b) RPA Results. Section IV.C.2 includes procedures for conducting the RPA for lead. When conducting the RPA for CTR metals with hardness-dependent criteria, the reasonable worst-case downstream hardness is used to calculate the CTR criteria. In this case, the applicable CTR criteria for lead based on the downstream hardness are 5.9 µg/L (chronic) and 150 µg/L (acute), as total recoverable. Total recoverable lead was detected but not quantified (DNQ) in three effluent samples (see table below). Since the effluent data is DNQ, the data is insufficient per Section 1.2 of the SIP.

Sample Date	Method Detection Level (MDL)	Reporting Level (RL)	Lead Effluent Result
10 September 2009	0.02	0.25	0.17 J
21 December 2010	0.02	0.25	0.14 J
19 July 2011	0.02	0.25	0.21 J

When conducting the RPA for CTR metals with hardness-dependent criteria, the maximum ambient background concentration is compared with the CTR criteria calculated using the lowest observed upstream receiving water hardness. The lowest observed hardness was 35 mg/L (as $CaCO_3$), which correlates with a chronic criterion of 0.84 µg/L and an acute criterion of 21 µg/L (as total recoverable). The maximum observed upstream total recoverable lead was 1.5 µg/L measured on 21 December 2010. Therefore, the maximum ambient receiving water concentration exceeds the applicable criteria for lead. As shown in Table F-10, an evaluation of the known situation where metals and hardness were measured on the same day indicates that there was an instance where the upstream receiving water exceeded the CTR chronic criterion for lead.

Table F-10. Lead Receiving Water CTR Criteria Comparison

Sample Date	RW Hardness (mg/L)	Lead	
		CTR Chronic Criterion (µg/L)	RW Lead (µg/L)
12/21/2010	44.2	1.1	1.5

SIP Section 2.4.2 states that the Minimum Level (ML) is the lowest quantifiable concentration in a sample based on the proper application of all method-based analytical procedures and the absence of any matrix interferences.

a) Required MLs are listed in Appendix 4 of the SIP. Where more than one ML is listed in Appendix 4, the discharger may select any one of the cited analytical methods for compliance determination. The selected ML used for compliance determination is referred to as the Reporting Level (RL).

b) A Reporting Level can be lower than the Minimum Level in Appendix 4 only when the discharger agrees to use a Reporting Level that is lower than the Minimum Level listed in Appendix 4. The Central Valley Water Board and the Discharger have no agreement to use a Reporting Limit lower than the listed Minimum Levels.

c) SIP Section 1.2 requires that the Regional Board use all available, valid, relevant, representative data and information, as determined by the Regional Board, to implement the SIP. SIP Section 1.2 further states that the Regional Board has the discretion to consider if any data are inappropriate or insufficient for use in implementing the SIP.

d) Data reported below the Minimum Level indicates the data may not be valid due to possible matrix interferences during the analytical procedure.

e) Further, SIP Section 2.4.5 (Compliance Determination) supports the insufficiency of data reported below the Minimum Level or Reporting Level. In part it states, “Dischargers shall be deemed out of compliance with an effluent limitation, for reporting and administrative enforcement purposes, if the concentration of the priority pollutant in the monitoring sample is greater than the effluent limitation and greater than or equal to the RL.” Thus, if submitted data is below the Reporting Limit, that data cannot be used to determine compliance with effluent limitations.

f) Data reported below the Minimum Level is not considered valid data for use in determining Reasonable Potential. Therefore, in accordance with Section 1.2 of the SIP, the Central Valley Water Board has determined that data reported below the Minimum Level is inappropriate and insufficient to be used to determine Reasonable Potential.

g) In implementing its discretion, the Central Valley Water Board is not finding that Reasonable Potential does not exist; rather the Central Valley Water Board cannot make such a determination given the invalid data. Therefore, the Central Valley Water Board will require additional monitoring for such constituents until such time a determination can be made in accordance with the SIP policy.

SIP Appendix 4 cites several Minimum Levels (ML) for lead. The lowest applicable ML cited for lead is 0.5 µg/L. The Discharger used an analytical method that was more sensitive than the minimum level required by the SIP. The effluent results were all estimated values (i.e., DNQ). Therefore, the submitted effluent lead data is inappropriate and insufficient to determine reasonable potential under the SIP.

The upstream receiving water concentration of 1.5 µg/L does exceed the CTR chronic criterion, however, Section 1.3, Step 6 of the SIP states that if the receiving water concentration exceeds the criteria and the pollutant is detected in the effluent, an effluent limitation is required. However; as discussed in detail above, insufficient effluent data is available at this time to justify establishing an effluent limitation for lead.

Section 1.3, Step 8 of the SIP allows the Central Valley Water Board to require additional monitoring for a pollutant in place of an effluent limitation if data are unavailable or insufficient. Instead of limitations, additional monitoring has been established for lead in both the effluent and the receiving water. Should monitoring results indicate that the discharge has the reasonable potential to cause or contribute to an

exceedance of a water quality standard, this Order may be reopened and modified by adding an appropriate effluent limitation.

c. **Constituents with No Reasonable Potential.** WQBELs are not included in this Order for constituents that do not demonstrate reasonable potential (i.e. constituents were not detected in the effluent or receiving water); however, monitoring for those pollutants is established in this Order as required by the SIP. If the results of effluent monitoring demonstrate reasonable potential, this Order may be reopened and modified by adding an appropriate effluent limitation.

Most constituents with no reasonable potential are not discussed in this Order. However, the following constituents were found to have no reasonable potential after assessment of the data:

i. Aluminum

(a) WQO. The Code of Federal Regulations promulgated criteria for priority toxic pollutants for California's surface waters as part of section 131.38 Establishment of Numeric Criteria for Priority Toxic Pollutants for the State of California (California Toxics Rule or CTR), including metals criteria. Freshwater aquatic life criteria for metals are expressed as a function of total hardness. However, aluminum criteria were not promulgated as part of the CTR. Absent numeric aquatic life criteria for aluminum, WQBEL's in the Central Valley Water Board's NPDES permits are based on the Basin Plan's narrative toxicity objective.

The Basin Plan's *Policy for Application of Water Quality Objectives* requires the Central Valley Water Board to consider, "*on a case-by-case basis, direct evidence of beneficial use impacts, all material and relevant information submitted by the discharger and other interested parties, and relevant numerical criteria and guidelines developed and/or published by other agencies and organizations. In considering such criteria, the Board evaluates whether the specific numerical criteria which are available through these sources and through other information supplied to the Board, are relevant and appropriate to the situation at hand and, therefore, should be used in determining compliance with the narrative objective*." Relevant information includes, but is not limited to the following: (1) USEPA Guidelines for Deriving Numerical National Water Quality Criteria for the Protection of Aquatic Organisms and Their Uses, (2) USEPA National Recommended Ambient Water Quality Criteria (NAWQC), (3) NAWQC–Correction, and (4) site-specific aluminum studies conducted by dischargers within the Central Valley Region. (Basin Plan, p. IV.-17.00; see also, 40 CFR 122.44(d)(vi).)

For aluminum, this Order implements the Basin Plan's narrative toxicity objective and the narrative chemical constituents objective for protection of the aquatic life and domestic and municipal supply beneficial uses.

USEPA developed National Recommended Ambient Water Quality Criteria (NAWQC) for protection of freshwater aquatic life for aluminum (1988). The recommended 4-day average (chronic) and 1-hour average (acute) criteria for aluminum are 87 µg/L and 750 µg/L, respectively, for waters with a pH of 6.5 to 9.0. The NAWQC can be used to implement the Basin Plan's narrative toxicity objective. In addition, the Secondary Maximum Contaminant Level (MCL) - Consumer Acceptance Limit for aluminum is 200 µg/L, which implements the Basin Plan's narrative chemical constituents objective. Order R5-2007-0036-01 included average monthly and maximum daily effluent limitations for aluminum based on the NAWQC acute criterion, and annual average effluent limitations for aluminum based on the secondary MCL.

In April 1999, USEPA released the National Recommended Water Quality Criteria–Correction. There were no corrections to the 1988 aluminum recommended criteria; however, USEPA recognized that they were aware of field data indicating that many high quality waters in the U.S. contain more than 87 µg/L aluminum, when either total recoverable or dissolved is measured (i.e., the higher levels of aluminum did not affect beneficial uses). Therefore, Footnote L to the National Recommended Ambient Water Quality Criteria summary table for aluminum indicated a water effects ratio (WER) might be appropriate for implementation of its recommended chronic criterion for aluminum to protect aquatic organisms. (*National Recommended Water Quality Criteria–Correction (April 1999*).)

Although striped bass may be present in the receiving water in the vicinity of the discharge, monitoring data demonstrates that the study conditions are not similar to those in the Old River, which consistently has a higher upstream hardness, ranging from 35 to 225 mg/L and higher pH, ranging from 6.7 to 9.1 standard units (7.6 median). Because the hardness in the Old River is higher (which decreases the toxic effects to aquatic life) than the water hardness values in which the criterion was developed, USEPA advises that a WER might be appropriate to better reflect the actual toxicity of aluminum to aquatic organisms.

In April 2005, the City of Modesto, which discharges from the Modesto Water Quality Control Facility to the San Joaquin River upstream of the confluence with the Old River, completed a Phase I WER for aluminum, and on 11 November 2005, submitted the results in its *Aluminum Water-Effect Ratio Study Plan*. The Phase I WER study consisted of range-finding toxicity tests, in which the NOEC, LOEC, and EC_{50}[19] were determined for the species *Daphnia magna, Ceriodaphnia dubia, and Rainbow Trout*. For this initial range-finding test, side-by-side testing with laboratory water was not conducted. However, to obtain an estimate of the

[19] The NOEC is the "no observed effect concentration", the LOEC is the "lowest observed effect concentration", and the EC_{50} is the concentration that caused an effect to 50% of the test organisms. See Attachment A for more detailed definitions.

potential WER for the Modesto effluent, the EC_{50} values determined for the site water were divided by the Species Mean Acute Value (SMAV) available in the aluminum criteria document according to EPA's streamlined WER procedure[20]. According to the EPA streamlined procedure, two WERs are determined by dividing site water WERs with both the laboratory dilution water EC_{50} and the SMAV; the final WER of the sample is the lesser of the two. The estimated WERs calculated using the SMAVs are presented in the table below:

Species	Site Water EC_{50} for Total Al (µg/L)	SMAV (µg/L Al)	WER
Daphnia magna	31,604	38.2	827
Ceriodaphnia dubia	>11,900[1]	1.9	6,263
Rainbow trout	>34,250[1]	10.39	3,296

[1] The 2001 EPA streamlined procedures state that a "greater than" value for the EC_{50} in the site water is interpreted as "equal to" in calculating the WER.

The Modesto Phase I WER study is not sufficient to calculate a WER, however, the preliminary results confirm the conditions of San Joaquin River are not similar to the EPA study conditions for the development of the USEPA recommended chronic criterion. The chronic criterion is overly stringent and is not appropriate to use to interpret the Basin Plan's narrative toxicity objective.

In addition, on 12 April 2007, the City of Manteca completed a Phase II aluminum WER study for the San Joaquin River near the discharge point for the Manteca Wastewater Quality Control Facility, which is downstream of the City of Modesto. The Manteca Phase II WER study, which may be used to calculate a WER for the City of Manteca's discharge, indicated that a WER of 22.7 can be applied to the chronic criterion for aluminum (resulting in a chronic criterion of 22.7 x 87 ug/L = 1,975 ug/L).

In addition, monitoring data demonstrates Old River hardness concentrations ranging from 35 mg/L to 225 mg/L and pH ranging from 6.7 to 9.1 standard units (7.6 median), are similar to conditions in the San Joaquin River near the Manteca and Modesto discharge locations, and are higher than conditions in which the NAWQC chronic criteria were developed. Thus, it is unlikely that application of the chronic criterion of 87 µg/L is necessary to protect aquatic life in the Old River. Since the characteristics of the Old River (e.g., hardness and pH) near Manteca and Modesto are similar to those near the Facility, the results of the Manteca WER and Modesto studies indicates that the chronic criterion recommended by the NAWQC for aluminum is overly stringent for the Old River.

[20] USEPA. 2001. Streamlined Water-Effect Ratio Procedure for Discharges of Copper. Office of Water. EPA-822-R-01-005. March.

Based on best professional judgment considering the site-specific conditions of the receiving water (e.g., hardness and pH), the Modesto Phase I WER Study, and the Manteca Phase II WER Study, the Central Valley Water Board finds that the NAWQC chronic criterion for aluminum is overly stringent and should not be used to interpret the narrative toxicity objective for this discharge. Therefore, the USEPA's NAWQC acute criterion for the protection of freshwater aquatic life, and the DPH Secondary MCL for aluminum were used to conduct the reasonable potential analysis for aluminum.

(b) RPA Results. The MEC for aluminum was 49 µg/L, based on 39 samples collected between August 2008 and December 2011. Two effluent samples collected on 5 August 2008 (290 µg/L) and 10 September 2008 (310 µg/L) were deemed to be outliers and non-representative of the discharge, thus were not used in the RPA. The figure below clearly demonstrates the samples are not representative of the discharge.

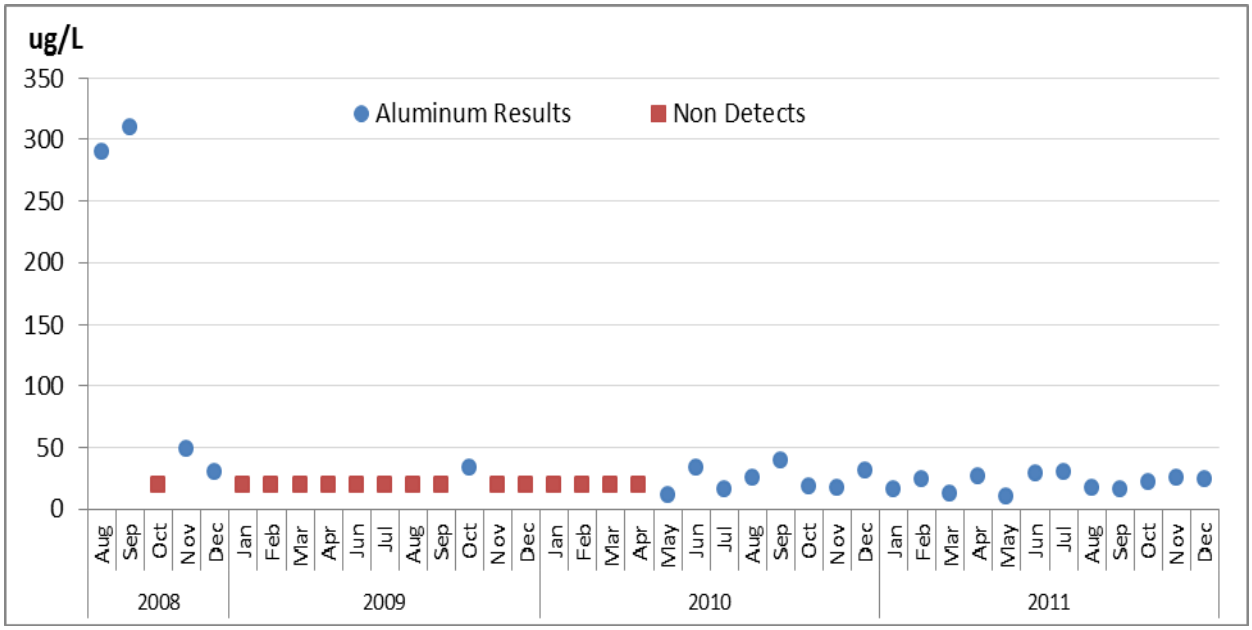

The maximum observed upstream receiving water aluminum concentration was 1900 µg/L, and the maximum annual average concentration was 955 µg/L, based on 15 samples collected between July 2008 and October 2011.

For priority pollutants, the SIP dictates the procedures for conducting the RPA. Aluminum is not a priority pollutant. Therefore, the Central Valley Water Board is not restricted to one particular RPA method. Due to the site-specific conditions of the discharge, the Central Valley Water Board has used best professional judgment in determining the appropriate method for conducting the RPA for this non-priority

pollutant constituent.

The most stringent objective is the Secondary MCL, which is derived from human welfare considerations (e.g., taste, odor, laundry staining). Although the receiving water contains aluminum exceeding the Secondary MCL, the effluent aluminum is consistently less than the concentrations in the receiving water and below the Secondary MCL. Therefore, the Central Valley Water Board finds the discharge does not have reasonable potential to cause or contribute to an exceedance in the receiving water and the Facility is adequately controlling the discharge of aluminum.

Order R5-2007-0036-01 included an annual average final effluent limit of 200 µg/L, an AMEL of 462 µg/L, and an MDEL of 755 µg/L. Since there is no reasonable potential these effluent limits have not been retained in this Order. Removal of these effluent limitations is in accordance with federal antibacksliding regulations (see section IV.D.3 of the Fact Sheet).

ii. Dissolved Oxygen

(a) WQO. The Basin Plan contains a numeric site-specific water quality objective for the Delta, in the vicinity of the discharge, that requires that dissolved oxygen (DO) concentrations shall not be reduced below 5 mg/L. Old River from the San Joaquin River to the Delta Mendota Canal is listed on the CWA Section 303(d) list for low dissolved oxygen.

(b) RPA Results. Based on 412 receiving water samples collected between August 2008 through July 2012 at RSW-002 and RSW-003 (500 feet east and west of the discharge), the DO concentrations have been consistently above the Basin Plan objective of 5 mg/L, averaging 10.2 mg/L. Of the 206 days of DO sampling, the receiving water DO was measured below the Basin Plan objective on only four days, twice in August 2008 and twice in July 2009. Based on the effluent sampling for DO and oxygen-demanding substances (i.e., biochemical oxygen demand and ammonia) the effluent discharge did not cause or contribute to the DO violations in the receiving water. The effluent daily average DO in the discharge during those periods was between 6.2 mg/L and 9.7 mg/L, while the effluent biochemical oxygen demand ranged from 2.7 mg/L to 3.6 mg/L and the effluent ammonia was non-detect (<1.0 mg/L).

Based on this information, the discharge does not have reasonable potential to cause or contribute to an exceedance of the Basin Plan DO Objective in the receiving water. Therefore, the WQBELs for DO have been removed in this Order. Removal of the effluent limitations is

consistent federal antibacksliding regulations and complies with state and federal antidegradation requirements.

iii. Iron

(a) WQO. The Basin Plan contains a site-specific numeric objective for the Delta of 300 µg/L (maximum concentration) for iron, expressed as dissolved metal. The Secondary MCL for iron is 300 µg/L (annual average), expressed as total recoverable metal.

(b) RPA Results. The MEC for iron was 54 µg/L, based on 42 samples collected between August 2008 and December 2011. The maximum observed iron concentration in the receiving water was 4000 µg /L in 15 samples collected August 2008 and October 2011, and the maximum annual average concentration was 1833 µg/L.

For priority pollutants, the SIP dictates the procedures for conducting the RPA. Iron is not a priority pollutant. Therefore, the Central Valley Water Board is not restricted to one particular RPA method. Due to the site-specific conditions of the discharge, the Central Valley Water Board has used best professional judgment in determining the appropriate method for conducting the RPA for this non-priority pollutant constituent.

The most stringent objective is the Secondary MCL, which is derived from human welfare considerations (e.g., taste, odor, laundry staining). Although the receiving water contains iron exceeding the Secondary MCL, the effluent iron is consistently less than the concentrations in the receiving water and below the applicable water quality objective. Therefore, the Central Valley Water Board finds the discharge does not have reasonable potential to cause or contribute to an exceedance in the receiving water and the Facility is adequately controlling the discharge of iron.

Since the discharge does not demonstrate reasonable potential, the effluent limitations for iron have not been retained in this Order. Removal of these effluent limitations is in accordance with federal antibacksliding regulations (see section IV.D.3 of the Fact Sheet).

iv. Manganese

(a) WQO. The Basin Plan includes a site-specific Basin Plan objective for manganese for the Delta of 50 µg/L (maximum concentration) and the Secondary MCL is 50 µg/L (annual average).

(b) RPA Results. The MEC for manganese was 20 µg/L, based on 42 samples collected between August 2008 and December 2011. The maximum observed manganese concentration in the receiving water

was 290 µg/L in 15 samples collected between August 2008 and October 2011, and the maximum annual average concentration was 147 µg/L.

For priority pollutants, the SIP dictates the procedures for conducting the RPA. Manganese is not a priority pollutant. Therefore, the Central Valley Water Board is not restricted to one particular RPA method. Due to the site-specific conditions of the discharge, the Central Valley Water Board has used best professional judgment in determining the appropriate method for conducting the RPA for this non-priority pollutant constituent.

The most stringent objective is the Secondary MCL, which is derived from human welfare considerations (e.g., taste, odor, laundry staining). Although the receiving water contains manganese exceeding the Secondary MCL, the effluent manganese is consistently less than the concentrations in the receiving water and below the applicable water quality objective Therefore, the Central Valley Water Board finds the discharge does not have reasonable potential to cause or contribute to an exceedance in the receiving water and the Facility is adequately controlling the discharge of manganese.

d. Constituents with Reasonable Potential. The Central Valley Water Board finds that the discharge has a reasonable potential to cause or contribute to an in-stream excursion above a water quality standard for ammonia, bis(2-ethylhexyl) phthalate, chlorodibromomethane, copper, dichlorobromomethane, electrical conductivity, mercury, nitrate + nitrite, pathogens, pH, salinity and toxicity. WQBELs for these constituents are included in this Order. A summary of the RPA is provided in Attachment G, and a detailed discussion of the RPA for each constituent is provided below.

i. Ammonia

(a) WQO. The NAWQC for the protection of freshwater aquatic life for total ammonia, recommends acute (1-hour average; criteria maximum concentration or CMC) standards based on pH and chronic (30-day average; criteria continuous concentration or CCC) criteria based on pH and temperature. USEPA also recommends that the 4-day average concentration should not exceed 2.5 times the 30-day CCC. USEPA found that as pH increased, both the acute and chronic toxicity of ammonia increased. Salmonids were more sensitive to acute toxicity effects than other species. However, while the acute toxicity of ammonia was not influenced by temperature, it was found that invertebrates and young fish experienced increasing chronic toxicity effects with increasing temperature. Because the Old River has a beneficial use of cold freshwater habitat and the presence of salmonids and early fish life stages in the Old River is well-documented, the

recommended criteria for waters where salmonids and early life stages are present were used.

(a) RPA Results. Federal regulations at 40 C.F.R. §122.44(d)(1)(i) requires that, "*Limitations must control all pollutants or pollutant parameters (either conventional, nonconventional, or toxic pollutants) which the Director determines are or may be discharged at a level which will cause, have the reasonable potential to cause, or contribute to an excursion above any State water quality standard, including State narrative criteria for water quality.*" For priority pollutants, the SIP dictates the procedures for conducting the RPA. Ammonia is not a priority pollutant. Therefore, the Central Valley Water Board is not restricted to one particular RPA method. Due to the site-specific conditions of the discharge, the Central Valley Water Board has used best professional judgment in determining the appropriate method for conducting the RPA for this non-priority pollutant constituent.

USEPA's September 2010 NPDES Permit Writer's Manual, page 6-30, states, "*State implementation procedures might allow, or even require, a permit writer to determine reasonable potential through a qualitative assessment process without using available facility-specific effluent monitoring data or when such data are not available…A permitting authority might also determine that WQBELs are required for specific pollutants for all facilities that exhibit certain operational or discharge characteristics (e.g., WQBELs for pathogens in all permits for POTWs discharging to contact recreational waters).*" USEPA's TSD also recommends that factors other than effluent data should be considered in the RPA, "*When determining whether or not a discharge causes, has the reasonable potential to cause, or contributes to an excursion of a numeric or narrative water quality criterion for individual toxicants or for toxicity, the regulatory authority can use a variety of factors and information where facility-specific effluent monitoring data are unavailable. These factors also should be considered with available effluent monitoring data.*" With regard to POTWs, USEPA recommends that, "*POTWs should also be characterized for the possibility of chlorine and ammonia problems.*" (TSD, p. 50)

The Facility is a POTW that treats domestic wastewater. Untreated domestic wastewater contains ammonia. Nitrification is a biological process that converts ammonia to nitrite and nitrite to nitrate. Denitrification is a process that converts nitrate to nitrite or nitric oxide and then to nitrous oxide or nitrogen gas, which is then released to the atmosphere. The Discharger currently uses nitrification to remove ammonia from the waste stream. Inadequate or incomplete nitrification may result in the discharge of ammonia to the receiving stream. Ammonia is known to cause toxicity to aquatic organisms in surface waters. Discharges of ammonia in concentrations that produce

detrimental physiological responses to human, plant, animal, or aquatic life would violate the Basin Plan narrative toxicity objective. Although the Discharger nitrifies the discharge, inadequate or incomplete nitrification creates the potential for ammonia to be discharged and provides the basis for the discharge to have a reasonable potential to cause or contribute to an in-stream excursion above the NAWQC. Therefore, the Central Valley Water Board finds the discharge has reasonable potential for ammonia and WQBELs are required.

(b) WQBELs. Applying 40 CFR CFR section 122.44(d)(1)(vi)(B), effluent limitations for ammonia are included in this Order and are based on U.S. EPA's Ambient Water Quality Criteria for the protection of the beneficial use of freshwater aquatic habitat. This Order contains final AMEL and MDEL for ammonia of 1.3 mg/L and 2.1 mg/L, respectively (See Attachment F, Table F-8 for WQBEL calculations). The use of seasonal effluent limitations was considered due to the seasonal variation of temperature of the effluent. However, the acute criterion, which is not dependent on temperature, controls the effluent limitation derivation. Therefore, for the application of the acute condition (1-hr duration), the ammonia effluent limitations apply year-round. Furthermore, due to periods of no flow in the receiving water, a dilution credit cannot be granted.

The development of fixed WQBELs for ammonia can be complex due to the variable ammonia criteria. In State Water Board WQ 2009-0003 for the City of Tracy, the State Water Board determined that the permit lacked an adequate rationale for development of the fixed WQBELs for ammonia using the median receiving water pH and remanded the permit to the Central Valley Water Board to either provide sufficient justification for the effluent limits or modify the limits. In the above approach for determining the appropriate chronic criterion, an assumption is made that the compliant discharge (i.e., meets ammonia criteria) causes a non-compliant situation in the receiving water due to changes in pH and/or temperature that result in a more stringent chronic criterion. In this approach, the ammonia concentrations in the effluent are assumed to remain the same downstream of the discharge, whereas the pH and temperature change. This is a conservative approach and is used when there is insufficient ammonia receiving water data to determine the actual ambient ammonia concentrations. For the City of Tracy, there is weekly ammonia monitoring in the receiving water, along with pH and temperature monitoring.

In a similar situation for the City of Stockton, receiving water ammonia concentrations were compared to paired 30-day average chronic ammonia criteria to determine if the discharge caused the receiving water criterion to be exceeded in the receiving water. Based on the

receiving water data, the ammonia criteria were never exceeded and it was determined that the current ammonia effluent limits were adequately protective. In the case of Stockton where this evaluation was used to justify current effluent limits, the permit was petitioned and the State Water Board agreed with this approach[21].

This same evaluation was conducted for the City of Tracy. Receiving water ammonia, pH, and temperature data were evaluated since implementation of the current ammonia effluent limits. Figure F-3, below, shows the calculated 30-day average chronic criteria from March 2007 thru January 2012 at R-002 and R-003, which are located 500 feet east and west of the discharge, respectively. This period includes the critically dry years of 2007 and 2008[22]. As demonstrated in the figure, the criteria fluctuate based on season due to fluctuations in pH and temperature. The most stringent criteria occur during the summer when the highest pH and temperature values occur.

Figure F-2
30-day Average Ammonia Criteria

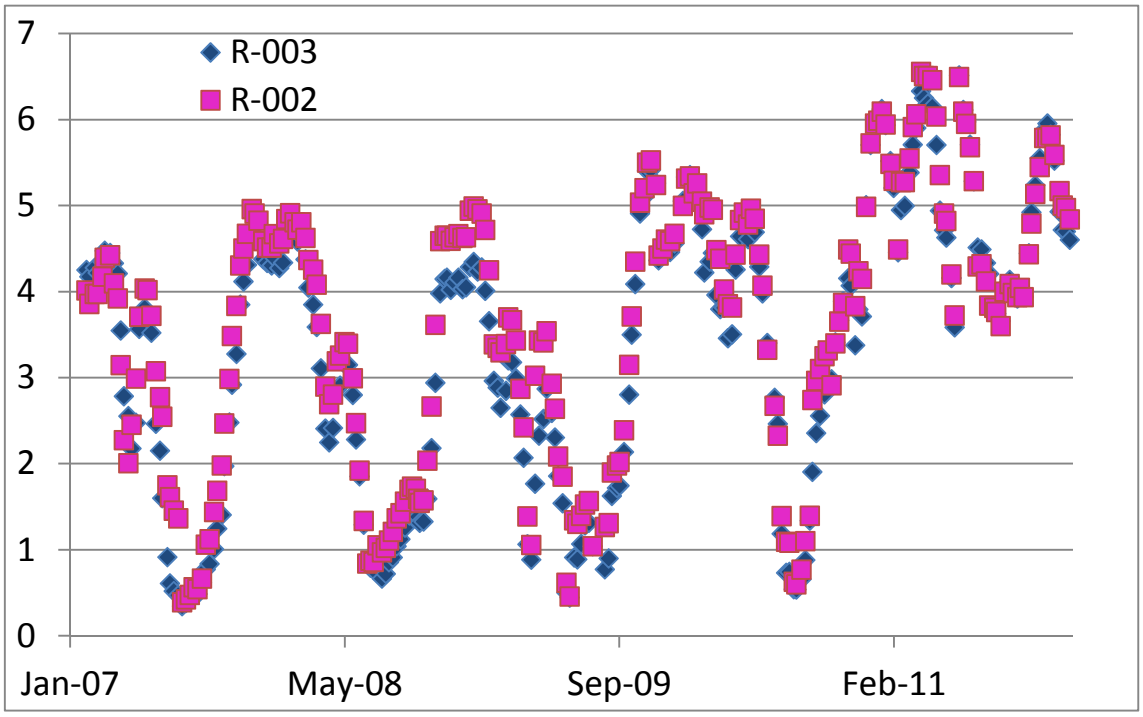

All ammonia receiving water data has been non-detect (<1 mg/L) from June 2007 through July 2010 and non-detect (<0.2 mg/L) from August 2010 through January 2012 (Tracy conducts weekly receiving water monitoring for ammonia, pH, and temperature).This demonstrates that

[21] State Board WQ 2009-0012 for the City of Stockton Regional Wastewater Control Facility
[22] Water Year Hydrologic Classification Indices (http://cdec.water.ca.gov/cgi-progs/iodir/WSIHIST)

the discharge is not causing exceedances of the ammonia criteria in the receiving water. Therefore, based on this information, it is justified to maintain the final effluent limits for ammonia. During each permit renewal, the ammonia effluent limitations will be re-evaluated to ensure they are adequately protective of the aquatic life beneficial uses.

This Order contains final AMEL and MDEL for ammonia of 1.3 mg/L and 2.1 mg/L, respectively (See Attachment F, Table F-8 for WQBEL calculations).

(c) Plant Performance and Attainability. Analysis of the effluent data shows that the MEC is 3.6 µg/L, which exceeds the MDEL for ammonia. However, the effluent ammonia concentrations have not exceeded the MDEL of 2.1 mg/L since July 2009. The Central Valley Water Board concludes, therefore, that immediate compliance with these effluent limitations is feasible.

ii. Bis(2-ethylhexyl)phthalate

(a) WQO. The CTR includes a criterion of 1.8 µg/L for bis (2-ethylhexyl) phthalate for the protection of human health for waters from which both water and organisms are consumed.

(b) RPA Results. Bis (2-ethylhexyl) phthalate was detected 4 times out of 43 effluent samples collected between August 2008 and December 2011 at concentrations ranging from 0.76 µg/L to 12 µg/L. Bis (2-ethylhexyl) phthalate was not detected in the upstream receiving water based on 15 samples collected between July 2008 and October 2011. The MEC of 12 µg/L could be considered an outlier as it is 6 standard deviations from the mean, but the bis-2 detection of 2 µg/L is likely not an outlier and exceeds the CTR criterion. Bis (2-ethylhexyl) phthalate is a common contaminant of sample containers, sampling apparatus, and analytical equipment, and sources of the detected bis (2-ethylhexyl) phthalate may be from plastics used for sampling or analytical equipment. The Discharger has been collecting and analyzing bis (2-ethylhexyl) phthalate using “clean techniques” to ensure that sample containers, sampling apparatus, and analytical equipment are not sources of the detections. In the absence of evidence that the source of the detected samples is laboratory error, the Central Valley Water Board concludes that bis (2-ethylehxyl) phthalate in the discharge has a reasonable potential to cause or contribute to an in-stream excursion above the CTR criterion for the protection of human health.

(c) WQBELs. As described further in section IV.C.2.c of this Fact Sheet, assimilative capacity is available and a dilution credit of 7.5:1 is appropriate for calculating effluent limitations for bis (2-ethylhexyl) phthalate. Therefore, this Order establishes WQBELs for bis (2-

ethylhexyl) phthalate of 12 µg/L and 49 µg/L, as an AMEL and MDEL, respectively.

(d) Plant Performance and Attainability. Analysis of the effluent data shows that the 99.9th percentile of the data is 6.7 µg/L and the MEC is 12 µg/L. The Central Valley Water Board concludes, therefore, that immediate compliance with these effluent limitations is feasible.

iii. Chlorine, Total Residual

(a) WQO. USEPA developed NAWQC for protection of freshwater aquatic life for chlorine residual. The recommended 4-day average (chronic) and 1-hour average (acute) criteria for chlorine residual are 0.011 µg/L and 0.019 µg/L, respectively. These criteria are protective of the Basin Plan's narrative toxicity objective.

(b) RPA Results. Federal regulations at 40 C.F.R. §122.44(d)(1)(i) requires that, "*Limitations must control all pollutants or pollutant parameters (either conventional, nonconventional, or toxic pollutants) which the Director determines are or may be discharged at a level which will cause, have the reasonable potential to cause, or contribute to an excursion above any State water quality standard, including State narrative criteria for water quality.*" For priority pollutants, the SIP dictates the procedures for conducting the RPA. Ammonia is not a priority pollutant. Therefore, the Central Valley Water Board is not restricted to one particular RPA method. Due to the site-specific conditions of the discharge, the Central Valley Water Board has used best professional judgment in determining the appropriate method for conducting the RPA for this non-priority pollutant constituent.

USEPA's September 2010 NPDES Permit Writer's Manual, page 6-30, states, "*State implementation procedures might allow, or even require, a permit writer to determine reasonable potential through a qualitative assessment process without using available facility-specific effluent monitoring data or when such data are not available…A permitting authority might also determine that WQBELs are required for specific pollutants for all facilities that exhibit certain operational or discharge characteristics (e.g., WQBELs for pathogens in all permits for POTWs discharging to contact recreational waters).*" USEPA's TSD also recommends that factors other than effluent data should be considered in the RPA, "*When determining whether or not a discharge causes, has the reasonable potential to cause, or contributes to an excursion of a numeric or narrative water quality criterion for individual toxicants or for toxicity, the regulatory authority can use a variety of factors and information where facility-specific effluent monitoring data are unavailable. These factors also should be considered with available effluent monitoring data.*" With regard to POTWs, USEPA recommends that, "*POTWs should also be characterized for the possibility of chlorine and ammonia problems.*" (TSD,

p. 50)

The Discharger uses chlorine for disinfection, which is extremely toxic to aquatic organisms. Although the Discharger uses a sulfur dioxide process to dechlorinate the effluent prior to discharge to Old River, the existing chlorine use and the potential for chlorine to be discharged provides the basis for the discharge to have a reasonable potential to cause or contribute to an in-stream excursion above the NAWQC.

(c) WQBELs. The USEPA *Technical Support Document for Water Quality-Based Toxics Control* [EPA/505/2-90-001] contains statistical methods for converting chronic (4-day) and acute (1-hour) aquatic life criteria to average monthly and maximum daily effluent limitations based on the variability of the existing data and the expected frequency of monitoring. However, because chlorine is an acutely toxic constituent that can and will be monitored continuously, an average 1-hour limitation is considered more appropriate than an average daily limitation. This Order contains a 4-day average effluent limitation and 1-hour average effluent limitation for chlorine residual of 0.011 µg/L and 0.019 µg/L, respectively, based on USEPA's NAWQC, which implements the Basin Plan's narrative toxicity objective for protection of aquatic life.

(d) Plant Performance and Attainability. Based on the analysis of the effluent, the Central Valley Water Board concludes that immediate compliance with these effluent limitations is feasible.

iv. Chlorodibromomethane

(a) WQO. The CTR includes a chlorodibromomethane criterion of 0.41 µg/L for the protection of human health and is based on a one-in-a-million cancer risk for waters from which both water and organisms are consumed.

(b) RPA Results. All Old River monitoring results from 17 samples collected between July 2008 and October 2011 were below the method detection limit; therefore, the maximum background ambient concentration was set to the lowest of the individual reported method detection limits, which was 0.03 µg/L.

The MEC for chlorodibromomethane was 28 µg/L, based on 58 samples collected between August 2008 and December 2011. Therefore, the discharge has a reasonable potential to cause or contribute to an in-stream excursion of a water quality objective and effluent limitations are necessary.

(c) WQBELs. The ambient monitoring demonstrates the receiving water has assimilative capacity for chlorodibromomethane. A dilution credit for chlorodibromomethane of 20:1 has been granted, based on the

available human health dilution (see Attachment F, Section IV.C.2.b.viii.). This Order contains final AMEL and MDEL for chlorodibromomethane of 8 µg/L and 18 µg/L, respectively (See Attachment H for WQBEL calculations).

(d) Plant Performance and Attainability. In 2010, the Facility installed a water champ chemical induction mixer for the purpose of enhanced mixing of chlorine and ammonia. The direct gas injection/mixer resulted in a better mixing of the chemical solution that allowed adequate control of THMs formation, chemical usage reduction, and eliminated using a water pump to create the chemical solution which also reduced energy usage. Since this improvement and based on current Facility performance, it appears that the Discharger can immediately comply with these effluent limitations.

v. Copper

(a) WQO. The CTR includes hardness-dependent criteria for the protection of freshwater aquatic life for copper. These criteria for copper are presented in dissolved concentrations. USEPA recommends conversion factors to translate dissolved concentrations to total concentrations. Default USEPA translators (i.e., 0.96 for acute and chronic criteria) were used for the receiving water and effluent.

The Basin Plan (BP) includes a site-specific objective for the Sacramento-San Joaquin Delta of 10 µg/L (dissolved) as a maximum concentration. Using the default USEPA translator, the BP objective is 10.4 µg/L (total recoverable).

You cannot directly compare the BP objective and CTR criteria to determine which is the most stringent objective, because they have different averaging periods and the CTR criteria vary with hardness while the BP objective does not. In this situation, the RPA has been conducted considering both water quality objectives.

(b) RPA Results. Section IV.C.2 includes procedures for conducting the RPA for copper. The CTR includes hardness-dependent criteria for copper. The maximum observed upstream receiving water copper concentration was 7 µg/L, based on 18 samples collected between July 2008 and October 2011. The RPA was conducted using the upstream receiving water hardness to calculate the criteria for comparing the maximum ambient background concentration and using the reasonable worst-case downstream hardness comparing the maximum effluent concentration. The table below shows the specific criteria used for the RPA.

	CTR Chronic Criterion, Total Recoverable	Site-Specific BP Objective, Total Recoverable	Maximum Concentration	Reasonable Potential (Y/N)
Receiving Water	3.8 µg/L[1]	10.4 µg/L	7 µg/L	Yes[3]
Effluent	17 µg/L[2]	10.4 µg/L	5.9 µg/L[4]	No

[1] Based on lowest observed upstream hardness of 35 mg/L (as $CaCO_3$)
[2] Based on reasonable worst-case downstream hardness of 200 mg/L (as $CaCO_3$)
[3] Maximum ambient background concentration exceeds CTR chronic criterion, but not BP objective.
[4] Maximum observed copper concentration, from May 2010 through December 1011, after the interim effluent limitation of 19 µg/L expired.

Based on the available data, the discharge has reasonable potential to cause or contribute to an exceedance of the CTR criterion in the receiving water, but the discharge does not demonstrate reasonable potential for the site-specific Basin Plan objective. Consequently, WQBELs are required for copper.

(c) WQBELs. Although reasonable potential was triggered only by the CTR criteria, WQBELs calculated based on the CTR criteria result in WQBELs exceeding the BP Objective. Consequently, the WQBELs have been developed using the BP Objective resulting in a MDEL of 10.4 µg/L (total recoverable), which is consistent with the previous Order. Federal regulations require that, unless impracticable, effluent limitations for POTWs are to be established as average weekly and average monthly. The site-specific objective for copper is established as a maximum concentration. Therefore, it is impracticable to calculate average weekly and average monthly effluent limitations for copper. A MDEL has been established to implement the site-specific objective.

(d) Plant Performance and Attainability. Based on facility performance the Central Valley Water Board finds the Discharger can comply immediately with these limits.

vi. Dichlorobromomethane

(a) WQO. The CTR includes a dichlorobromomethane criterion of 0.56 µg/L for the protection of human health and is based on a one-in-a-million cancer risk for waters from which both water and organisms are consumed.

(b) RPA Results. All Old River monitoring results from 17 samples collected between July 2008 and October 2011 were below the method detection limit; therefore, the maximum background ambient concentration was set to the lowest of the individual reported method detection limits, which was 0.06 µg/L.

The MEC for dichlorobromomethane was 40 µg/L, based on 58 samples collected between August 2008 and December 2011. Therefore, the discharge has a reasonable potential to cause or contribute to an in-stream excursion of a water quality objective and effluent limitations are necessary.

(c) WQBELs. The ambient monitoring demonstrates the receiving water has assimilative capacity for dichlorobromomethane. A dilution credit for dichlorobromomethane of 20:1 has been granted, based on the available human health dilution (see Attachment F, Section IV.C.2.b.viii.). This Order contains final AMEL and MDEL for dichlorobromomethane of 11 µg/L and 29 µg/L, respectively (See Attachment H for WQBEL calculations).

(d) Plant Performance and Attainability. In 2010, the Facility installed a water champ chemical induction mixer for the purpose of enhanced mixing of chlorine and ammonia. The direct gas injection/mixer resulted in a better mixing of the chemical solution that allowed adequate control of THMs formation, chemical usage reduction, and eliminated using a water pump to create the chemical solution which also reduced energy usage. Since this improvement and based on current Facility performance, it appears that the Discharger can immediately comply with these effluent limitations.

vii. Electrical Conductivity. (see Subsection xii. Salinity)

viii. Mercury

(a) WQO. The Basin Plan contains fish tissue objectives for all Delta waterways listed in Appendix 43 of the Basin Plan that states, "…*the average methylmercury concentrations shall not exceed 0.08 and 0.24 mg methylmercury/kg, wet weight, in muscle tissue of trophic level 3 and 4 fish, respectively (150-500 mm total length). The average methylmercury concentrations shall not exceed 0.03 mg methylmercury/kg, wet weight, in whole fish less than 50 mm in length.*" The Delta Mercury Control Program contains aqueous methylmercury waste load allocations that are calculated to achieve the fish tissue objectives. Methylmercury reductions are assigned to discharges with concentrations of methylmercury greater than 0.06 ng/l (the concentration of methylmercury in water to meet the fish tissue objectives).

The CTR contains a human health criterion (based on a threshold dose level causing neurological effects in infants) of 50 ng/L for total mercury for waters from which both water and aquatic organisms are consumed. However, in 40 CFR Part 131, USEPA acknowledges that the human health criteria may not be protective of some aquatic or endangered species and that "…*more stringent mercury limits may be*

determined and implemented through use of the State's narrative criterion." In the CTR, USEPA reserved the mercury criteria for freshwater and aquatic life and may adopt new criteria at a later date.

(b) RPA Results. Section 1.3 of the SIP states, "*The RWQCB shall conduct the analysis in this section for each priority pollutant with an applicable criterion or objective,* ***excluding priority pollutants for which a Total Maximum Daily Load (TMDL) has been developed****, to determine if a water quality-based effluent limitation is required in the discharger's permit.*" (emphasis added) Although a RPA is not required, based on the available effluent and receiving water methylmercury data, it appears the discharge is causing or contributing to an exceedance of the concentration of methylmercury in water to meet the site-specific fish tissue objectives in the Basin Plan. The maximum observed effluent methylmercury concentration was 0.2 ng/L, and the maximum ambient methylmercury concentration was 0.3 ng/L.

(c) WQBELs. The Basin Plan's Delta Mercury Control Program includes wasteload allocations for POTWs in the Delta, including for the Discharger. In accordance with 40 CFR 122.44(d)(1)(vii)(B) and the SIP,This Order contains final WQBELs for methylmercury based on the wasteload allocation. The total calendar annual methylmercury load shall not exceed 0.77 grams.

(d) Plant Performance and Attainability. Based on available effluent methylmercury data, the Central Valley Water Board finds the Discharger is unable to immediately comply with the final WQBELs for methylmercury. Therefore, a compliance schedule in accordance with the State Water Board's Compliance Schedule Policy and the Delta Mercury Control Program has been established in this Order.

ix. Nitrate and Nitrite

(a) WQO. DPH has adopted Primary MCLs for the protection of human health for nitrite and nitrate that are equal to 1 mg/L and 10 mg/L (measured as nitrogen), respectively. DPH has also adopted a primary MCL of 10,000 µg/L for the sum of nitrate and nitrite, measured as nitrogen.

USEPA has developed a primary MCL and an MCL goal of 1,000 µg/L for nitrite (as nitrogen). For nitrate, USEPA has developed Drinking Water Standards (10,000 µg/L as Primary MCL) and NAWQC for protection of human health (10,000 µg/L for non-cancer health effects). Recent toxicity studies have indicated a possibility that nitrate is toxic to aquatic organisms.

(b) RPA Results. Federal regulations at 40 C.F.R. §122.44(d)(1)(i) requires that, "*Limitations must control all pollutants or pollutant parameters (either conventional, nonconventional, or toxic pollutants) which the Director determines are or may be discharged at a level which will cause, have the reasonable potential to cause, or contribute to an excursion above any State water quality standard, including State narrative criteria for water quality.*" For priority pollutants, the SIP dictates the procedures for conducting the RPA. Ammonia is not a priority pollutant. Therefore, the Central Valley Water Board is not restricted to one particular RPA method. Due to the site-specific conditions of the discharge, the Central Valley Water Board has used best professional judgment in determining the appropriate method for conducting the RPA for this non-priority pollutant constituent.

USEPA's September 2010 NPDES Permit Writer's Manual, page 6-30, states, "*State implementation procedures might allow, or even require, a permit writer to determine reasonable potential through a qualitative assessment process without using available facility-specific effluent monitoring data or when such data are not available…A permitting authority might also determine that WQBELs are required for specific pollutants for all facilities that exhibit certain operational or discharge characteristics (e.g., WQBELs for pathogens in all permits for POTWs discharging to contact recreational waters).*" USEPA's TSD also recommends that factors other than effluent data should be considered in the RPA, "*When determining whether or not a discharge causes, has the reasonable potential to cause, or contributes to an excursion of a numeric or narrative water quality criterion for individual toxicants or for toxicity, the regulatory authority can use a variety of factors and information where facility-specific effluent monitoring data are unavailable. These factors also should be considered with available effluent monitoring data.*" With regard to POTWS, USEPA recommends that, "*POTWs should also be characterized for the possibility of chlorine and ammonia problems.*" (TSD, p. 50)

The Facility is a POTW that treats domestic wastewater. Untreated domestic wastewater contains ammonia and this Order requires removal of ammonia (i.e., nitrification). Nitrification is a biological process that converts ammonia to nitrite and nitrite to nitrate. Denitrification is a process that converts nitrate to nitrite or nitric oxide and then to nitrous oxide or nitrogen gas, which is then released to the atmosphere. The Discharger currently uses nitrification/denitrification to remove ammonia, nitrite, and nitrate from the waste stream. Inadequate or incomplete denitrification may result in the discharge of nitrate and/or nitrite to the receiving stream. Discharges of nitrate plus nitrite in concentrations that exceed the primary MCL would violate the Basin Plan narrative chemical constituents objective. Although the Discharger denitrifies the discharge, inadequate or incomplete

denitrification creates the potential for nitrate and nitrite to be discharged and provides the basis for the discharge to have a reasonable potential to cause or contribute to an in-stream excursion above the primary MCL. Therefore, the Central Valley Water Board finds the discharge has reasonable potential for nitrate plus nitrite and WQBELs are required.

(c) WQBELs. This Order contains an AMEL for nitrate plus nitrite of 10 mg/L (total as N), based on the primary MCL. This effluent limitation is included in this Order to assure the treatment process adequately nitrifies and denitrifies the waste stream to protect the beneficial use of municipal and domestic supply.

(d) Plant Performance and Attainability. Since upgrades were completed to completely nitrify and denitrify the wastewater in August 2008, and based on the current Facility performance, it appears that the Discharger can immediately comply with this effluent limitation.

x. Pathogens

(a) WQO. DPH has developed reclamation criteria, CCR, Division 4, Chapter 3 (Title 22), for the reuse of wastewater. Title 22 requires that for spray irrigation of food crops, parks, playgrounds, schoolyards, and other areas of similar public access, wastewater be adequately disinfected, oxidized, coagulated, clarified, and filtered, and that the effluent total coliform levels not exceed 2.2 MPN/100 mL as a 7-day median; 23 MPN/100 mL, not to be exceeded more than once in a 30-day period; and 240 MPN/100 mL, at any time.

Title 22 also requires that recycled water used as a source of water supply for non-restricted recreational impoundments be disinfected tertiary recycled water that has been subjected to conventional treatment. A non-restricted recreational impoundment is defined as *"…an impoundment of recycled water, in which no limitations are imposed on body-contact water recreational activities."* Title 22 is not directly applicable to surface waters; however, the Central Valley Water Board finds that it is appropriate to apply an equivalent level of treatment to that required by the DPH's reclamation criteria because the receiving water is used for irrigation of agricultural land and for contact recreation purposes. The stringent disinfection criteria of Title 22 are appropriate since the undiluted effluent may be used for the irrigation of food crops and/or for body-contact water recreation. Coliform organisms are intended as an indicator of the effectiveness of the entire treatment train and the effectiveness of removing other pathogens.

(b) RPA Results. Federal regulations at 40 C.F.R. §122.44(d)(1)(i) requires that, "*Limitations must control all pollutants or pollutant*

parameters (either conventional, nonconventional, or toxic pollutants) which the Director determines are or may be discharged at a level which will cause, have the reasonable potential to cause, or contribute to an excursion above any State water quality standard, including State narrative criteria for water quality." For priority pollutants, the SIP dictates the procedures for conducting the RPA. Ammonia is not a priority pollutant. Therefore, the Central Valley Water Board is not restricted to one particular RPA method. Due to the site-specific conditions of the discharge, the Central Valley Water Board has used best professional judgment in determining the appropriate method for conducting the RPA for this non-priority pollutant constituent.

USEPA's September 2010 NPDES Permit Writer's Manual, page 6-30, states, "*State implementation procedures might allow, or even require, a permit writer to determine reasonable potential through a qualitative assessment process without using available facility-specific effluent monitoring data or when such data are not available…A permitting authority might also determine that WQBELs are required for specific pollutants for all facilities that exhibit certain operational or discharge characteristics (e.g., WQBELs for pathogens in all permits for POTWs discharging to contact recreational waters).*" USEPA's TSD also recommends that factors other than effluent data should be considered in the RPA, "*When determining whether or not a discharge causes, has the reasonable potential to cause, or contributes to an excursion of a numeric or narrative water quality criterion for individual toxicants or for toxicity, the regulatory authority can use a variety of factors and information where facility-specific effluent monitoring data are unavailable. These factors also should be considered with available effluent monitoring data.*" (TSD, p. 50)

The beneficial uses of Old River include municipal and domestic supply, water contact recreation, and agricultural irrigation supply, and there is, at times, less than 20:1 dilution. To protect these beneficial uses, the Central Valley Water Board finds that the wastewater must be disinfected and adequately treated to prevent disease. Although the Discharger provides disinfection, inadequate or incomplete disinfection creates the potential for pathogens to be discharged and provides the basis for the discharge to have a reasonable potential to cause or contribute to an exceedance of the Basin Plan's narrative toxicity objective. Therefore, the Central Valley Water Board finds the discharge has reasonable potential for pathogens and WQBELs are required.

(c) WQBELs. The method of treatment is not prescribed by this Order; however, wastewater must be treated to a level equivalent to that recommended by DPH. In accordance with the requirements of Title 22, this Order includes effluent limitations for total coliform

organisms of 2.2 MPN/100 mL as a 7-day median; 23 MPN/100 mL, not to be exceeded more than once in a 30-day period; and 240 MPN/100 mL as an instantaneous maximum. As coliform organisms are living and mobile, it is impracticable to quantify an exact number of coliform organisms and to establish weekly average limitations. Instead, coliform organisms are measured as a most probable number and regulated based on a 7-day median limitation.

In addition to coliform limitations, an operational specification for turbidity has been included as a second indicator of the effectiveness of the treatment process and to assure compliance with the required level of treatment. The Title 22 tertiary treatment process, or equivalent, is capable of reliably meeting a turbidity limitation of 2 nephelometric turbidity units (NTU) as a daily average. Failure of the filtration system such that virus removal is impaired would normally result in increased particles in the effluent, which result in higher effluent turbidity. Turbidity has a major advantage for monitoring filter performance, allowing immediate detection of filter failure and rapid corrective action. Coliform testing, by comparison, is not conducted continuously and requires several hours, to days, to identify high coliform concentrations. In accordance with DPH recommendations, this Order includes operational specifications for turbidity of 2 NTU as a daily average; 5 NTU, not to be exceeded more than 5% of the time within a 24-hour period; and 10 NTU as an instantaneous maximum.

Final WQBELs for BOD_5 and TSS are based on the technical capability of the tertiary process, which is necessary to protect the beneficial uses of the receiving water. BOD_5 is a measure of the amount of oxygen used in the biochemical oxidation of organic matter. The tertiary treatment standards for BOD_5 and TSS are indicators of the effectiveness of the tertiary treatment process. The principal design parameter for wastewater treatment plants is the daily BOD_5 and TSS loading rates and the corresponding removal rate of the system. The application of tertiary treatment processes results in the ability to achieve lower levels for BOD_5 and TSS than the secondary standards currently prescribed. Therefore, this Order requires AMELs for BOD_5 and TSS of 10 mg/L, which is technically based on the capability of a tertiary system. In addition to the average weekly and average monthly effluent limitations, a daily maximum effluent limitation for BOD_5 and TSS is included in the Order to ensure that the treatment works are not organically overloaded and operate in accordance with design capabilities.

This Order contains effluent limitations for BOD_5, total coliform organisms, and TSS and requires a Title 22 tertiary level of treatment, or equivalent, necessary to protect the beneficial uses of the receiving water. The Central Valley Water Board has previously considered the

factors in Water Code section 13241 in establishing these requirements.

(d) Plant Performance and Attainability. The Facility includes disinfection facilities that can comply with the WQBELs. The Central Valley Water Board concludes, therefore, that immediate compliance with these effluent limitations is feasible.

xi. pH

(a) WQO. The Basin Plan includes a water quality objective for surface waters (except for Goose Lake) that the *"…pH shall not be depressed below 6.5 nor raised above 8.5.*

(b) RPA Results. Federal regulations at 40 C.F.R. §122.44(d)(1)(i) requires that, "*Limitations must control all pollutants or pollutant parameters (either conventional, nonconventional, or toxic pollutants) which the Director determines are or may be discharged at a level which will cause, have the reasonable potential to cause, or contribute to an excursion above any State water quality standard, including State narrative criteria for water quality.*" For priority pollutants, the SIP dictates the procedures for conducting the RPA. Ammonia is not a priority pollutant. Therefore, the Central Valley Water Board is not restricted to one particular RPA method. Due to the site-specific conditions of the discharge, the Central Valley Water Board has used best professional judgment in determining the appropriate method for conducting the RPA for this non-priority pollutant constituent.

USEPA's September 2010 NPDES Permit Writer's Manual, page 6-30, states, "*State implementation procedures might allow, or even require, a permit writer to determine reasonable potential through a qualitative assessment process without using available facility-specific effluent monitoring data or when such data are not available…A permitting authority might also determine that WQBELs are required for specific pollutants for all facilities that exhibit certain operational or discharge characteristics (e.g., WQBELs for pathogens in all permits for POTWs discharging to contact recreational waters).*" USEPA's TSD also recommends that factors other than effluent data should be considered in the RPA, "*When determining whether or not a discharge causes, has the reasonable potential to cause, or contributes to an excursion of a numeric or narrative water quality criterion for individual toxicants or for toxicity, the regulatory authority can use a variety of factors and information where facility-specific effluent monitoring data are unavailable. These factors also should be considered with available effluent monitoring data.*" (TSD, p. 50)

The Facility is a POTW that treats domestic wastewater. Although the Discharger has proper pH controls in place, the pH for the Facility's

influent varies due to the nature of municipal sewage, which provides the basis for the discharge to have a reasonable potential to cause or contribute to an in-stream excursion above the Basin Plan's numeric objective for pH in the receiving water. Therefore, WQBELs for pH are required in this Order.

(c) WQBELs. Effluent limitations for pH of 6.5 as an instantaneous minimum and 8.5 as an instantaneous maximum are included in this Order based on protection of the Basin Plan objectives for pH.

(d) Plant Performance and Attainability. Based on available effluent pH data, it appears the Discharger is able to comply with these limitations. The Central Valley Water Board concludes, therefore, that immediate compliance with these effluent limitations is feasible.

xii. Salinity

(a) WQO. The Basin Plan contains a chemical constituent objective that incorporates state MCLs, contains a narrative objective, and contains numeric water quality objectives for electrical conductivity, total dissolved solids, sulfate, and chloride. In addition, USEPA has developed National Ambient Water Quality Criteria for chloride for the protection of freshwater aquatic life.

Table F-11. Salinity Water Quality Criteria/Objectives

Parameter	Secondary MCL[1]	Bay-Delta Plan	USEPA NAWQC	Effluent	
				Average	Maximum
EC (µmhos/cm)	900, 1600, 2200	700/1000[3]	N/A	1252[2]	1569
TDS (mg/L)	500, 1000, 1500	N/A	N/A	728[2]	909
Sulfate (mg/L)	250, 500, 600	N/A	N/A	147	150
Chloride (mg/L)	250, 500, 600	N/A	230 4-day 860 1-hr	161	220

[1] The secondary MCLs are stated as a recommended level, upper level, and a short-term maximum level.

[2] Maximum calendar annual average.

[3] The Bay-Delta Plan includes water quality objectives at three locations in the South Delta for EC, which includes a 14-day running average EC of 700 µmhos/cm from 1 April – 31 Aug and a 14-day running average EC of 1000 µmhos/cm from 1 September - 31 March. The State Water Board is developing revised salinity objectives for municipal dischargers.

(1) Chloride. The secondary MCL for chloride is 250 mg/L, as a recommended level, 500 mg/L as an upper level, and 600 mg/L as a short-term maximum. USEPA Ambient Water Quality Criteria for

Chloride recommends acute (1-hour) and chronic (4-day) criteria for the protection of freshwater aquatic life of 860 mg/L and 230 mg/L, respectively.

(2) Electrical Conductivity. The secondary MCL for EC is 900 µmhos/cm as a recommended level, 1600 µmhos/cm as an upper level, and 2200 µmhos/cm as a short-term maximum.

The Bay-Delta Plan includes water quality objectives for EC for the South Delta in the vicinity of the discharge[23]. On 1 June 2011, the Superior Court for Sacramento County entered a judgment and peremptory writ of mandate in the matter of *City of Tracy v. State Water Resources Control Board* (Case No; 34-2009-8000-392-CU-WM-GDS), ruling that the South Delta salinity objectives shall not apply to the City of Tracy and other municipal dischargers pending reconsideration of the South Delta salinity objectives and adoption of a proper program of implementation that includes municipal dischargers. The State Water Board is currently considering new salinity and flow objectives in the South Delta that will address the Court Order. Therefore, at the time this Order was adopted the South Delta salinity objectives are not applicable to the Discharger.

(3) Sulfate. The secondary MCL for sulfate is 250 mg/L as a recommended level, 500 mg/L as an upper level, and 600 mg/L as a short-term maximum.

(4) Total Dissolved Solids. The secondary MCL for TDS is 500 mg/L as a recommended level, 1000 mg/L as an upper level, and 1500 mg/L as a short-term maximum.

(b) RPA Results.

(1) Chloride. Chloride concentrations in the effluent ranged from 160 mg/L to 220 mg/L, with an average of 161 mg/L. Background concentrations in Old River ranged from 21 mg/L to 100 mg/L, with an average of 47 mg/L, for 4 samples collected by the Discharger from August 2008 through July 2011. The applicable water quality objective to implement the Basin Plan's narrative chemical constituents objective for salinity is the Bay-Delta Plan south Delta salinity objectives, which are under development.

(2) Electrical Conductivity. A review of the Discharger's monitoring reports shows a maximum calendar annual average effluent EC of 1252 µmhos/cm, with a range from 954 µmhos/cm to 1569 µmhos/cm. The background receiving water EC averaged 544 µmhos/cm. The

[23] The Bay-Delta Plan includes water quality objectives at three locations in the South Delta for EC. The water quality objectives are a 14-day running average EC of 700 µmhos/cm from 1 April – 31 Aug and a 14-day running average EC of 1000 µmhos/cm from 1 September - 31 March.

applicable water quality objective to implement the Basin Plan's narrative chemical constituents objective for salinity is the Bay-Delta Plan south Delta salinity objectives.

(3) Sulfate. Sulfate concentrations in the effluent ranged from 110 mg/L to 150 mg/L, with an average of 147 mg/L. These levels do not exceed the secondary MCL. Background concentrations in Old River ranged from 22 mg/L to 70 mg/L, with an average of 45 mg/L. The Discharge does not have reasonable potential for sulfate.

(4) Total Dissolved Solids. The maximum calendar annual average TDS effluent concentration was 728 mg/L with concentrations ranging from 569 mg/L to 909 mg/L. Background receiving water data is unavailable. The applicable water quality objective to implement the Basin Plan's narrative chemical constituents objective for salinity is the Bay-Delta Plan south Delta salinity objectives, which are under development.

(c) WQBELs.

The State Water Board is currently revising the Bay-Delta Plan to include salinity objectives that would be applicable to the discharge. Since the Bay-Delta Plan will include the applicable salinity objectives to conduct the reasonable potential analysis, until completion of the update, the reasonable potential analysis cannot be completed properly.

Pending the Bay-Delta Plan amendment, this Order carries forward the TDS effluent limits and salinity controls from the previous permit. This Order includes an annual mass loading effluent limitation for TDS and requires the Discharger to implement measures to reduce the salinity in its discharge to Old River.

The TDS effluent limitation is carried forward from the previous Order and is based on treatment plant performance. The TDS effluent limit will ensure that the mass loading of salinity does not increase as the effluent flow rate increases. In previous Order R5-2007-0036-01 an interim TDS loading limit was established due to antidegradation concerns. In the previous permit the Discharger requested an increase in discharge flow from 9 MGD to 16 MGD. A condition of the increase was that the salt loading would remain the same, which satisfied the antidegradation requirements. The Discharger is able to maintain its current salt loading as the discharge flows increase, because it is expanding the use of lower salinity water supplies to support the growth in the City of Tracy. In this Order, the TDS loading limit was changed from an interim effluent limit to a final effluent limit. The TDS loading limit was originally established to satisfy antidegradation requirements, therefore, the effluent limits should be final effluent

limits. Interim effluent limits should only be included in NPDES permits when a time schedule results in a delay in the implementation of final effluent limits. In this case, the TDS loading limits must remain in effect to comply with antidegradation requirements and therefore are not interim effluent limits that will be replaced by final effluent limits at a future date.

This Order also requires the Discharger to implement a Salinity Reduction Plan that includes pollution prevention measures to reduce the salinity in its discharge to Old River. The Salinity Plan must include a pollution prevention plan for salinity in accordance with Water Code section 13263.3(d)(3), and requires the Discharger to report on progress in reducing salinity discharges to Old River in an effort to meet a salinity goal of a calendar annual average 500 µmhos/cm electrical conductivity increase over the calendar annual weighted average EC of the City of Tracy's water supply. The Salinity Reduction Plan must also include measures the Discharger is taking to implement best practicable treatment or control (BPTC) of the discharge for salinity, describe the Discharger's participation in CV-SALTS, and describe the Dischargers efforts to obtain lower salinity water supplies.

xiii. Temperature

(a) WQO. The Thermal Plan requires that, "*The maximum temperature shall not exceed the natural receiving water temperature by more than 20°F.*"

(b) RPA Results. Federal regulations at 40 C.F.R. §122.44(d)(1)(i) requires that, "*Limitations must control all pollutants or pollutant parameters (either conventional, nonconventional, or toxic pollutants) which the Director determines are or may be discharged at a level which will cause, have the reasonable potential to cause, or contribute to an excursion above any State water quality standard, including State narrative criteria for water quality.*" For priority pollutants, the SIP dictates the procedures for conducting the RPA. Ammonia is not a priority pollutant. Therefore, the Central Valley Water Board is not restricted to one particular RPA method. Due to the site-specific conditions of the discharge, the Central Valley Water Board has used best professional judgment in determining the appropriate method for conducting the RPA for this non-priority pollutant constituent.

USEPA's September 2010 NPDES Permit Writer's Manual, page 6-30, states, "*State implementation procedures might allow, or even require, a permit writer to determine reasonable potential through a qualitative assessment process without using available facility-specific effluent monitoring data or when such data are not available…A permitting authority might also determine that WQBELs are required for specific pollutants for all facilities that exhibit certain operational or discharge*

characteristics (e.g., WQBELs for pathogens in all permits for POTWs discharging to contact recreational waters)." USEPA's TSD also recommends that factors other than effluent data should be considered in the RPA, "*When determining whether or not a discharge causes, has the reasonable potential to cause, or contributes to an excursion of a numeric or narrative water quality criterion for individual toxicants or for toxicity, the regulatory authority can use a variety of factors and information where facility-specific effluent monitoring data are unavailable. These factors also should be considered with available effluent monitoring data.*" (TSD, p. 50)

The Facility is a POTW that treats domestic wastewater. Domestic wastewater is an elevated temperature waste, which provides the basis for the discharge to have a reasonable potential to cause or contribute to an excursion above Thermal Plan requirements. Therefore, WQBELs for temperature are required in this Order.

(c) WQBELs. To ensure compliance with the Thermal Plan, an effluent limitation for temperature is included in this Order.

(d) Plant Performance and Attainability. Based on existing Facility performance it appears the Discharger can immediately comply with the temperature effluent limits.

xiv. Whole Effluent Toxicity (See Section IV.C.5)

4. WQBEL Calculations

a. This Order includes WQBELs for ammonia, copper, chlorodibromomethane, dichlorobromomethane, bis(2-ethylhexyl)phthalate, nitrate plus nitrite (total as N), dissolved oxygen, total residual chlorine, diazinon, chlorpyrifos, and methylmercury. The general methodology for calculating WQBELs based on the different criteria/objectives is described in subsections IV.C.4.b through e, below. See Attachment H for the WQBEL calculations.

b. Effluent Concentration Allowance. For each water quality criterion/objective, the ECA is calculated using the following steady-state mass balance equation from Section 1.4 of the SIP:

$$ECA = C + D(C - B) \quad \text{where } C>B, \text{ and}$$
$$ECA = C \quad \text{where } C \leq B$$

where:

ECA = effluent concentration allowance
D = dilution credit
C = the priority pollutant criterion/objective
B = the ambient background concentration.

According to the SIP, the ambient background concentration (B) in the equation above shall be the observed maximum with the exception that an ECA calculated from a priority pollutant criterion/objective that is intended to protect human health from carcinogenic effects shall use the arithmetic mean concentration of the ambient background samples. For ECAs based on MCLs, which implement the Basin Plan's chemical constituents objective and are applied as annual averages, an arithmetic mean is also used for B due to the long-term basis of the criteria.

c. **Basin Plan Objectives and MCLs.** For WQBELs based on site-specific numeric Basin Plan objectives or MCLs, the effluent limitations are applied directly as the ECA as either an MDEL, AMEL, or average annual effluent limitations, depending on the averaging period of the objective.

d. **Aquatic Toxicity Criteria.** WQBELs based on acute and chronic aquatic toxicity criteria are calculated in accordance with Section 1.4 of the SIP. The ECAs are converted to equivalent long-term averages (i.e. LTAacute and LTAchronic) using statistical multipliers and the lowest LTA is used to calculate the AMEL and MDEL using additional statistical multipliers.

e. **Human Health Criteria.** WQBELs based on human health criteria, are also calculated in accordance with Section 1.4 of the SIP. The ECAs are set equal to the AMEL and a statistical multiplier was used to calculate the MDEL.

$$AMEL = mult_{AMEL}\left[\min\left(\overbrace{M_A ECA_{acute}}^{LTA_{acute}}, M_C ECA_{chronic}\right)\right]$$

$$MDEL = mult_{MDEL}\left[\min\left(M_A ECA_{acute}, \underbrace{M_C ECA_{chronic}}_{LTA_{chronic}}\right)\right]$$

$$MDEL_{HH} = \left(\frac{mult_{MDEL}}{mult_{AMEL}}\right) AMEL_{HH}$$

where:
$mult_{AMEL}$ = statistical multiplier converting minimum LTA to AMEL
$mult_{MDEL}$ = statistical multiplier converting minimum LTA to MDEL
M_A = statistical multiplier converting acute ECA to LTA_{acute}
M_C = statistical multiplier converting chronic ECA to $LTA_{chronic}$

Summary of Water Quality-Based Effluent Limitations
Discharge Point No. 001 and Discharge Point No. 002

Table F-12. Summary of Water Quality-Based Effluent Limitations

Parameter	Units	Effluent Limitations				
		Average Monthly	Average Weekly	Maximum Daily	Instantaneous Minimum	Instantaneous Maximum
Biochemical Oxygen Demand (BOD) (5-day @ 20 Deg. C)	mg/L	10	15	20	--	--
	lbs/day[1]	900	1400	1800	--	--
	lbs/day[2]	1000	1500	2000	--	--
	lbs/day[3]	1100	1700	2300	--	--
	lbs/day[4]	1300	2000	2700	--	--
Total Suspended Solids	mg/L	10	15	20	--	--
	lbs/day[1]	900	1400	1800	--	--
	lbs/day[2]	1000	1500	2000	--	--
	lbs/day[3]	1100	1700	2300	--	--
	lbs/day[4]	1300	2000	2700	--	--
pH	standard units	--	--	--	6.5	8.5
Ammonia	mg/L	1.3	--	2.1	--	--
	lbs/day[1]	120	--	190	--	--
	lbs/day[2]	130	--	200	--	---
	lbs/day[3]	150	--	240	--	--
	lbs/day[4]	170	--	280	--	--
Bis(2-ethylhexyl) phthalate	µg/L	12	--	49	--	--
Copper (total recoverable)	µg/L	--	--	10.4	--	--
Chlorodibromomethane	µg/L	8.0	--	18	--	--
Dichlorobromomethane	µg/L	11	--	23	--	--
Methylmercury	grams	0.77[5]	--	--	--	--
Diazinon and Chlorpyrifos	µg/L	[10]	--	[11]	--	--
Nitrate + Nitrite (as N)	mg/L	10	--	--	--	--
Chlorine, Total Residual	mg/L	--	0.011[8]	0.019[9]	--	--
Total Coliform Organisms	MPN/ 100 mL	--	2.2[6]	23[7]	--	240

Parameter	Units	Effluent Limitations				
		Average Monthly	Average Weekly	Maximum Daily	Instantaneous Minimum	Instantaneous Maximum

[1] Based on an existing permitted flow of 10.8 mgd. Mass limits effective immediately and until compliance with Special Provisions VI.C.6.a.
[2] Based on a permitted flow of 12 mgd. Mass limits effective upon compliance with Special Provisions VI.C.6.b.and until compliance with Special Provisions VI.C.6.c.
[3] Based on a permitted flow of 13.6 mgd. Mass limits effective upon compliance with Special Provisions VI.C.6.c. and until compliance with Special Provisions VI.C.6.d.
[4] Based on a permitted flow of 16 mgd. Mass limits effective upon compliance with Special Provisions VI.C.6.d.
[5] The total calendar annual load of methylmercury shall not exceed 0.77 grams.
[6] Applied as a 7-day median effluent limitation.
[7] Not to be exceeded more than once in any 30-day period.
[8] Applied as a 4-day average effluent limitation.
[9] Applied as a 1-hour average effluent limitation.
[10] $$S_{AMEL} = \frac{C_{D-avg}}{0.079} + \frac{C_{C-avg}}{0.012} \leq 1.0$$
$C_{D\text{-}avg}$ = average monthly diazinon effluent concentration in µg/L
$C_{C\text{-}avg}$ = average monthly chlorpyrifos effluent concentration in µg/L
[11] $$S_{MDEL} = \frac{C_{D-max}}{0.16} + \frac{C_{C-max}}{0.025} \leq 1.0$$

5. Whole Effluent Toxicity (WET)

For compliance with the Basin Plan's narrative toxicity objective, this Order requires the Discharger to conduct whole effluent toxicity testing for acute and chronic toxicity, as specified in the Monitoring and Reporting Program (Attachment E section V.). This Order also contains effluent limitations for acute and chronic toxicity and requires the Discharger to implement best management practices to investigate the causes of, and identify corrective actions to reduce or eliminate effluent toxicity.

a. Acute Aquatic Toxicity. The Basin Plan contains a narrative toxicity objective that states, "All waters shall be maintained free of toxic substances in concentrations that produce detrimental physiological responses in human, plant, animal, or aquatic life." (Basin Plan at page III-8.00 for discharges in the Sac/SJ Basins). The Basin Plan also states that, "…effluent limits based upon acute biotoxicity tests of effluents will be prescribed where appropriate…".

For priority pollutants, the SIP dictates the procedures for conducting the RPA. Acute toxicity is not a priority pollutant. Therefore, the Central Valley Water Board is not restricted to one particular RPA method. Due to the site-specific conditions of the discharge, the Central Valley Water Board has used best professional judgment in determining the appropriate method for conducting the RPA for this non-priority pollutant constituent. USEPA's September 2010 NPDES Permit Writer's Manual, page 6-30, states, "*State implementation procedures might allow, or even require, a permit writer to determine reasonable potential through a qualitative assessment process without using available facility-specific effluent monitoring data or when such data are not available…A permitting authority might also determine that WQBELs are*

required for specific pollutants for all facilities that exhibit certain operational or discharge characteristics (e.g., WQBELs for pathogens in all permits for POTWs discharging to contact recreational waters)." Although the discharge has been consistently in compliance with the acute effluent limitations, the Facility is a POTW that treats domestic wastewater containing ammonia and other acutely toxic pollutants. Acute toxicity effluent limits are required to ensure compliance with the Basin Plan's narrative toxicity objective.

USEPA Region 9 provided guidance for the development of acute toxicity effluent limitations in the absence of numeric water quality objectives for toxicity in its document titled "Guidance for NPDES Permit Issuance", dated February 1994. In section B.2. "Toxicity Requirements" (pgs. 14-15) it states that, "In the absence of specific numeric water quality objectives for acute and chronic toxicity, the narrative criterion 'no toxics in toxic amounts' applies. Achievement of the narrative criterion, as applied herein, means that ambient waters shall not demonstrate for acute toxicity: 1) less than 90% survival, 50% of the time, based on the monthly median, or 2) less than 70% survival, 10% of the time, based on any monthly median. Accordingly, effluent limitations for acute toxicity have been included in this Order as follows:

Acute Toxicity. Survival of aquatic organisms in 96-hour bioassays of undiluted waste shall be no less than:

Minimum for any one bioassay---------- 70%
Median for any three consecutive bioassays ---------- 90%

b. **Chronic Aquatic Toxicity.** Based on chronic WET testing performed by the Discharger from February 2008 through November 2011, there was one exceedance of the numeric monitoring trigger, as shown in Table F-13 below. The Discharger conducted bi-weekly accelerated monitoring in accordance with the permit and the results did not exceed the trigger. Therefore, a toxicity reduction evaluation was not required. Based on the one exceedance of the trigger, however, the discharge has reasonable potential to cause or contribute to an in-stream excursion above of the Basin Plan's narrative toxicity objective.

Table F-13. Whole Effluent Chronic Toxicity Testing Results

	Fathead Minnow *Pimephales promelas*		**Water Flea** *Ceriodaphnia dubia*		**Green Algae** *Selenastrum capricornutum*
Date	Survival (TUc)	Growth (TUc)	Survival (TUc)	Reproduction (TUc)	Growth (TUc)
2/5/2008	1	1	1	1	1
5/6/2008	1	1	1	1	1
8/5/2008	1	1	1	2	1
9/9/2008			1	1	
9/30/2008			1	1	
10/7/2008			1	1	
10/21/2008			1	1	

Date	**Fathead Minnow** *Pimephales promelas* Survival (TUc)	Growth (TUc)	**Water Flea** *Ceriodaphnia dubia* Survival (TUc)	Reproduction (TUc)	**Green Algae** *Selenastrum capricornutum* Growth (TUc)
11/4/2008	1	1	1	1	1
2/24/2009	1	1	1	1	1
5/5/2009	1	1	1	1	1
8/4/2009	1	1	1	1	1
11/3/2009	1	1	1	1	1
2/2/2010	1	1	1	1	1
5/11/2010	1	1	1	1	1
8/17/2010	1	1	1	1	1
11/16/2010	1	1	1	1	1
3/15/2011	1	1	1	1	1
5/10/2011	1	1	1	1	1
8/9/2011	1	1	1	1	1
11/15/2011	1	1	1	1	1

The Monitoring and Reporting Program of this Order requires quarterly chronic WET monitoring for demonstration of compliance with the narrative toxicity objective. In addition to WET monitoring, the Special Provision in section VI.C.2.a of the Order includes a numeric toxicity monitoring trigger, requirements for accelerated monitoring, and requirements for TRE initiation if toxicity is demonstrated.

Numeric chronic WET effluent limitations have not been included in this Order. The SIP contains implementation gaps regarding the appropriate form and implementation of chronic toxicity limits. This has resulted in the petitioning of a NPDES permit in the Los Angeles Region[24] that contained numeric chronic toxicity effluent limitations. To address the petition, the State Water Board adopted WQO 2003-012 directing its staff to revise the toxicity control provisions in the SIP. The State Water Board states the following in WQO 2003-012, "*In reviewing this petition and receiving comments from numerous interested persons on the propriety of including numeric effluent limitations for chronic toxicity in NPDES permits for publicly-owned treatment works that discharge to inland waters, we have determined that this issue should be considered in a regulatory setting, in order to allow for full public discussion and deliberation. We intend to modify the SIP to specifically address the issue. We anticipate that review will occur within the next year. We therefore decline to make a determination here regarding the propriety of the final numeric effluent limitations for chronic toxicity contained in these permits.*" The process to revise the SIP is currently underway. Proposed changes include clarifying the appropriate form of effluent toxicity limits in NPDES permits and general

[24] In the Matter of the Review of Own Motion of Waste Discharge Requirements Order Nos. R4-2002-0121 [NPDES No. CA0054011] and R4-2002-0123 [NPDES NO. CA0055119] and Time Schedule Order Nos. R4-2002-0122 and R4-2002-0124 for Los Coyotes and Long Beach Wastewater Reclamation Plants Issued by the California Regional Water Quality Control Board, Los Angeles Region SWRCB/OCC FILES A-1496 AND 1496(a)

expansion and standardization of toxicity control implementation related to the NPDES permitting process. Since the toxicity control provisions in the SIP are under revision it is infeasible to develop numeric effluent limitations for chronic toxicity. Therefore, this Order includes a narrative effluent limitation and requires that the Discharger meet best management practices for compliance with the Basin Plan's narrative toxicity objective, as allowed under 40 CFR 122.44(k).

To ensure compliance with the Basin Plan's narrative toxicity objective, the Discharger is required to conduct chronic WET testing, as specified in the Monitoring and Reporting Program (Attachment E section V.). Furthermore, the Special Provision contained at VI.C.2.a. of this Order requires the Discharger to investigate the causes of, and identify and implement corrective actions to reduce or eliminate effluent toxicity. If the discharge demonstrates toxicity exceeding the numeric toxicity monitoring trigger, the Discharger is required to initiate a Toxicity Reduction Evaluation (TRE) in accordance with an approved TRE workplan. The numeric toxicity monitoring trigger is not an effluent limitation; it is the toxicity threshold at which the Discharger is required to perform accelerated chronic toxicity monitoring, as well as, the threshold to initiate a TRE if effluent toxicity has been demonstrated.

D. Final Effluent Limitations

1. Mass-based Effluent Limitations

40 CFR 122.45(f)(1) requires effluent limitations be expressed in terms of mass, with some exceptions, and 40 CFR 122.45(f)(2) allows pollutants that are limited in terms of mass to additionally be limited in terms of other units of measurement. This Order includes effluent limitations expressed in terms of mass and concentration. In addition, pursuant to the exceptions to mass limitations provided in 40 CFR 122.45(f)(1), some effluent limitations are not expressed in terms of mass, such as pH and temperature, and when the applicable standards are expressed in terms of concentration (e.g., CTR criteria and MCLs) and mass limitations are not necessary to protect the beneficial uses of the receiving water.

Mass-based effluent limitations were calculated based upon the design flow (Average Dry Weather Flow) permitted in section IV.A.1.a of this Order.

2. Averaging Periods for Effluent Limitations

40 CFR 122.45 (d) requires average weekly and average monthly discharge limitations for publicly owned treatment works (POTWs) unless impracticable. However, for toxic pollutants and pollutant parameters in water quality permitting, USEPA recommends the use of a maximum daily effluent limitation in lieu of average weekly effluent limitations for two reasons. "*First, the basis for the 7-day average for POTWs derives from the secondary treatment requirements. This basis is not related to the need for assuring achievement of water quality standards. Second, a 7-day average, which could comprise up to seven or more*

daily samples, could average out peak toxic concentrations and therefore the discharge's potential for causing acute toxic effects would be missed." (TSD, pg. 96) This Order uses maximum daily effluent limitations in lieu of average weekly effluent limitations for ammonia, bis(2-ethylhexyl)phthalate, copper, chlorodibromomethane and dichlorobromomethane as recommended by the TSD for the achievement of water quality standards and for the protection of the beneficial uses of the receiving stream. Furthermore, for pH, total coliform organisms, and total residual chlorine, weekly average effluent limitations have been replaced or supplemented with effluent limitations utilizing shorter averaging periods. The rationale for using shorter averaging periods for these constituents is discussed in section IV.C.3 of this Fact Sheet.

3. Satisfaction of Anti-Backsliding Requirements

The Clean Water Act specifies that a revised permit may not include effluent limitations that are less stringent than the previous permit unless a less stringent limitation is justified based on exceptions to the anti-backsliding provisions contained in Clean Water Act sections 402(o) or 303(d)(4), or, where applicable, 40 CFR 122.44(l).

Based on the new information gathered over the term of Order R5-2007-0036-01, the effluent limitations in this Order are at least as stringent as the effluent limitations in the existing Order, with the exception of effluent limitations for aluminum, chlorodibromomethane, dichlorobromomethane, dissolved oxygen, iron, nitrate (as N) and nitrite (as N). The effluent limitations for these pollutants are less stringent than those in Order R5-2007-0036-01. This relaxation of effluent limitations is consistent with the anti-backsliding requirements of the CWA and federal regulations.

a. Aluminum.

CWA section 402(o)(2). In the recent permit amendment due to the City's lawsuit, the Central Valley Water Board found that the USEPA NAWQC chronic criterion (87 µg/L) was not applicable and applied the acute criterion (750 µg/L) and the secondary MCL of 200 µg/L. The previous permit includes an AMEL of 462 µg/L and MDEL of 755 µg/L for aluminum based on the acute criterion, and a final annual average effluent limit of 200 µg/L. The limits were included in the previous permit due to the receiving water exceeding the USEPA acute criterion and the secondary MCL for aluminum. Based on new tertiary effluent data for aluminum, the discharge does not demonstrate reasonable potential, therefore, the effluent limits have been removed in this Order. In accordance with section 402(o)(2) of the CWA the effluent limits may be relaxed if, "*There have been material and substantial alterations or additions to the permitted facility which justify the application of less stringent effluent limitations.*" In this case, the Facility has been upgraded to tertiary filtration since adoption of the last permit. The effluent has demonstrated consistently low concentrations of aluminum since the Facility upgrades, which results in a finding of no reasonable potential.

Therefore, the removal of these effluent limitations meet the exception to the anti-backsliding requirements under CWA section 402(o)(2).

CWA section 402(o)(1) and 303(d)(4). CWA section 402(o)(1) specifies that, in the case of effluent limitations established on the basis of CWA section 301(b)(1)(C) (i.e., WQBELs), a permit may not be renewed, reissued, or modified to contain effluent limitations which are less stringent than the comparable effluent limitations in the previous permit except in compliance with CWA section 303(d)(4). The effluent limitations for aluminum established in previous Order R5-2007-0036-01 are WQBELs and may be relaxed if the requirements of CWA section 303(d)(4) are satisfied.

CWA section 303(d)(4) has two parts: paragraph (A) which applies to nonattainment waters and paragraph (B) which applies to attainment waters. For attainment waters, CWA section 303(d)(4)(B) specifies that a limitation based on a water quality standard may be relaxed where the action is consistent with the antidegradation policy. The 303(d) listings for Old River and the Sacramento-San Joaquin Delta, as described in section III.D.1 of this Fact Sheet, do not include aluminum. Thus, the receiving water is an attainment water for aluminum[25]. As discussed in section IV.D.4, the removal of WQBELs for aluminum is consistent with the antidegradation provisions of 40 CFR 131.12 and State Water Board Resolution No. 68-16. Therefore, the removal of these effluent limitations meet the exception to the anti-backsliding requirements under CWA section 402(o)(1) and 303(d)(4).

b. **Chlorodibromomethane (CDBM) and Dichlorobromomethane (DCBM).** The water quality-based effluent limits (WQBELs) for CDBM and DCBM in this Order are less stringent than in previous Order R5-2007-0036-01. The WQBELs are less stringent because new background receiving water data for CDBM and DCBM was made available for the WQBEL calculations that were not available at the time the WQBELs in the previous permit were established.

During the term of the previous permit, the Discharger collected new data for the background receiving water using improved analytical methods with a lower method detection limit. Similar to the previous permit, all data was below detection limits. The use of lower method detection limits demonstrated there is more assimilative capacity for CDBM and DCBM in the receiving water than previously determined. Dilution credits are allowed for CDBM and DCBM, so the available assimilative capacity impacts the WQBEL calculations. In accordance with Section 1.4.3.2 of the SIP, when dilution credits are used for the WQBEL calculations and all background receiving water data is non-detect, the lowest method detection limit is used

[25] *The exceptions in Section 303(d)(4) address both waters in attainment with water quality standards and those not in attainment, i.e. waters on the section 303(d) impaired waters list.*" See *In the Matter of the Petition of the Environmental Law Foundation*, WQO 2008-0006 at p. 4.

to represent the maximum ambient background concentration. Consequently, the new data using lower method detection limits results in less stringent WQBELs.

In the previous Order, the Central Valley Water Board authorized dilution credits for CDBM and DCBM and found the utilization of some assimilative capacity for these constituents complied with the antidegradation provisions of 40 CFR 131.12 and State Water Board Resolution 68-16. In Table F-11 below, it is demonstrated that although the effluent limits have increased in this Order, the estimated amount of assimilative capacity used has not increased due to the new information. To evaluate the use of assimilative capacity, the estimated receiving water concentrations at the Clifton Court Forebay (a representative far-field location) were estimated using the Delta Simulation Model 2 (DSM2) modeling discussed in Section IV.C.2.c.vi of the Fact Sheet. Table F-14 shows the estimated mixed receiving water concentrations of CDBM and DCBM at Clifton Court Forebay for the previous permit and this permit. As demonstrated below, although the effluent limits are increased in this permit, the estimated impacts on the receiving water at the far-field location are reduced from the previously estimated impacts determined in the previous Order. Therefore, the estimated degradation is reduced and the increased effluent limits are consistent with the antidegradation provisions of 40 CFR 131.12 and State Water Board Resolution 68-16. Compliance with these WQBELs will result in the use of best practicable treatment or control of the discharge and the impact on existing water quality will be insignificant.

Table F-14. Determination of Assimilative Capacity for CDBM and DCBM

						Far-Field Location Clifton Court Forebay		
		Estimated Background Concentration		Average Monthly Effluent Limit			Mixed Receiving Water Concentration	
Constituent	CTR Criterion	Previous Permit	Current Permit	Previous Permit	Current Permit	Effluent Fraction	Previous Permit	Current Permit
CDBM	0.41 µg/L	<0.25 µg/L	<0.03 µg/L	3.6 µg/L	8 µg/L	2%	0.32 µg/L	0.19 µg/L
DCBM	0.56 µg/L	<0.25 µg/L	<0.06 µg/L	6.8 µg/L	11 µg/L	2%	0.39 µg/L	0.28 µg/L

Section 303(d)(4)(B) of the Clean Water Act (CWA) for attainment waters, provides that WQBELs based on a total maximum daily load (TMDL), waste load allocation (WLA), other water quality standard, or any other permitting standard may be relaxed where the action is consistent with state's antidegradation policy. The action to relax the WQBELs for CDBM and DCBM complies with State Water Board Resolution 68-16, which meets the exception to backsliding in accordance with section 303(d)(4)(B) of the CWA.

c. Iron.

CWA section 402(o)(2). Previous Order R5-2007-0036-01 included an effluent limit for total recoverable iron of of 300 mg/L for the discharge, applied as an annual average. Based on tertiary effluent data for iron, the discharge does not demonstrate reasonable potential, therefore, the effluent limit has been removed in this Order. In accordance with section 402(o)(2) of the CWA the effluent limits may be relaxed if, "*There have been material and substantial alterations or additions to the permitted facility which justify the application of less stringent effluent limitations.*" In this case, the Facility has been upgraded to tertiary filtration since adoption of the last permit. The effluent has demonstrated consistently low concentrations of iron since the Facility upgrades, which results in a finding of no reasonable potential. Therefore, the removal of these effluent limitations meet the exception to the anti-backsliding requirements under CWA section 402(o)(2).

CWA section 402(o)(1) and 303(d)(4). CWA section 402(o)(1) specifies that, in the case of effluent limitations established on the basis of CWA section 301(b)(1)(C) (i.e., WQBELs), a permit may not be renewed, reissued, or modified to contain effluent limitations which are less stringent than the comparable effluent limitations in the previous permit except in compliance with CWA section 303(d)(4). The effluent limitations for iron established in previous Order R5-2007-0036-01 are WQBELs and may be relaxed if the requirements of CWA section 303(d)(4) are satisfied.

CWA section 303(d)(4) has two parts: paragraph (A) which applies to nonattainment waters and paragraph (B) which applies to attainment waters. For attainment waters, CWA section 303(d)(4)(B) specifies that a limitation based on a water quality standard may be relaxed where the action is consistent with the antidegradation policy. The 303(d) listings for Old River and the Sacramento-San Joaquin Delta, as described in section III.D.1 of this Fact Sheet, do not include iron. Thus, the receiving water is an attainment water for iron[26]. As discussed in section IV.D.4, the removal of WQBELs for iron is consistent with the antidegradation provisions of 40 CFR 131.12 and State Water Board Resolution No. 68-16. Therefore, the removal of these effluent limitations meet the exception to the anti-backsliding requirements under CWA section 402(o)(1) and 303(d)(4).

d. Dissolved Oxygen. Previous Order R5-2007-0036-01 included an effluent limit for dissolved oxygen of 5 mg/L as a daily average. Based on data collected since the adoption of the previous Order, the discharge does not demonstrate reasonable potential to cause or contribute to an exceedance of the applicable water quality objectives for dissolved oxygen in the receiving water. Therefore, the dissolved oxygen effluent limit has been

[26] "*The exceptions in Section 303(d)(4) address both waters in attainment with water quality standards and those not in attainment, i.e. waters on the section 303(d) impaired waters list.*" See *In the Matter of the Petition of the Environmental Law Foundation*, WQO 2008-0006 at p. 4.

removed in this Order. In accordance with section 402(o)(2) of the CWA the effluent limits may be relaxed if, "*There have been material and substantial alterations or additions to the permitted facility which justify the application of less stringent effluent limitations.*" In this case, the Facility has been upgraded to tertiary filtration since adoption of the last permit that has resulted in a significant reduction in oxygen-demanding substances (e.g., biochemical oxygen demand, ammonia, and total suspended solids).

4. Satisfaction of Antidegradation Policy

This Order does not allow for an increase in flow or mass of pollutants to the receiving water. Therefore, a complete antidegradation analysis is not necessary. The Order requires compliance with applicable federal technology-based standards and with WQBELs where the discharge could have the reasonable potential to cause or contribute to an exceedance of water quality standards. The permitted discharge is consistent with the antidegradation provisions of 40 CFR 131.12 and State Water Board Resolution No. 68-16. Compliance with these requirements will result in the use of best practicable treatment or control of the discharge. The impact on existing water quality will be insignificant.

This Order removes existing effluent limitations for constituents in which updated monitoring data demonstrates that the effluent does not cause or contribute to an exceedance of the applicable water quality criteria or objectives in the receiving water. The Central Valley Water Board finds that the removal of the effluent limitations does not result in an allowed increase in pollutants or any additional degradation of the receiving water. Thus, the removal of effluent limitations is consistent with the antidegradation provisions of 40 CFR 131.12 and State Water Board Resolution No. 68-16.

The permitted surface water discharge is consistent with the antidegradation provisions of 40 CFR 131.12 and State Water Board Resolution No. 68-16. Compliance with these requirements will result in the use of best practicable treatment or control of the discharge. The impact on existing water quality will be insignificant.

5. Stringency of Requirements for Individual Pollutants

This Order contains both technology-based effluent limitations and WQBELs for individual pollutants. The technology-based effluent limitations consist of restrictions on Flow. The WQBELs consist of restrictions on ammonia, bis(2-ethylhexyl)phthalate, chlorodibromomethane, copper, BOD, TSS, pH, total coliform organisms, total residual chlorine, and dichlorobromomethane. This Order's technology-based pollutant restrictions implement the minimum, applicable federal technology-based requirements. In addition, this Order includes new effluent limitations for nitrate + nitrite (as N) to meet numeric objectives or protect beneficial uses.

This Order does not contain pollutant restrictions that are more stringent than applicable federal requirements and standards.

Summary of Final Effluent Limitations
Discharge Point No. 001 and Discharge Point No. 002

Table F-15. Summary of Final Effluent Limitations

Parameter	Units	Effluent Limitations					Basis[1]
		Average Monthly	Average Weekly	Maximum Daily	Instantaneous Minimum	Instantaneous Maximum	
Flow	MGD	--	--	10.8	--	--	PF
	MGD	--	--	12	--	--	
	MGD	--	--	13.6	--	--	
	MGD	--	--	16	--	--	
Biochemical Oxygen Demand	mg/L	10	15	20	--	--	TTC
	lbs/day	900	1351	1801	--	--	
	lbs/day	1001	1501	2002	--	--	
	lbs/day	1134	1701	2268	--	--	
	lbs/day	1334	2002	2669	--	--	
	% Removal	85	--	--	--	--	CFR
Total Suspended Solids	mg/L	10	15	20	--	--	TTC
	lbs/day	900	1351	1801	--	--	
	lbs/day	1001	1501	2002	--	--	
	lbs/day	1134	1701	2268	--	--	
	lbs/day	1334	2002	2669	--	--	
	% Removal	85	--	--	--	--	CFR
pH	standard units	--	--	--	6.5	8.5	BP, PB
Ammonia (as N)	mg/L	1.3	--	2.1	--	--	NAWQC
	lbs/day	117	--	189	--	--	
	lbs/day	130	--	210	--	--	
	lbs/day	147	--	238	--	--	
	lbs/day	173	--	280	--	--	
Bis(2-ethylhexyl)Phthalate	µg/L	12	--	79	--	--	CTR
Chlorine, Total Residual	mg/L	--	0.011[2]	0.019[3]	--	--	NAWQC
Chlorodibromomethane	µg/L	8.0	--	18	--	--	CTR
Copper, Total Recoverable	µg/L	--	--	10.4	--	--	BP
Diazinon and Chlorpyrifos	µg/L	[4]	--	[5]	--	--	BP
Dichlorobromomethane	µg/L	11	--	23	--	--	CTR
Dissolved Oxygen	mg/L	--	--	5[9]	--	--	BP
Methylmercury	grams	0.77[8]	--	--	--	--	BP

Parameter	Units	Effluent Limitations					Basis[1]
		Average Monthly	Average Weekly	Maximum Daily	Instantaneous Minimum	Instantaneous Maximum	
Nitrite Plus Nitrate (as N)	mg/L	10	--	--	--	--	MCL
Total Coliform Organisms	MPN/100 mL	--	2.2[6]	23[7]	--	240	Title 22

1 PF – Based on permitted flow of the Facility ranging from 10.8 MGD to 16 MGD to coincide with phased upgrade project.
TTC – Based on tertiary treatment capability. These effluent limitations reflect the capability of a properly operated tertiary treatment plant.
CFR – Based on secondary treatment standards contained in 40 CFR Part 133.
BP – Based on water quality objectives contained in the Basin Plan.
CTR – Based on water quality criteria contained in the California Toxics Rule and applied as specified in the SIP.
NAWQC – Based on USEPA's National Ambient Water Quality Criteria for the protection of freshwater aquatic life.
SEC MCL – Based on the Secondary Maximum Contaminant Level.
TMDL – Based on the TMDL for salinity and boron in the lower San Joaquin River.
MCL – Based on the Primary Maximum Contaminant Level.
Title 22 – Based on CA Department of Public Health Reclamation Criteria, CCR, Division 4, Chapter 3 (Title 22).

2 Applied as a 4-day average effluent limitation.

3 Applied as a 1-hour average effluent limitation.

4 $$S_{AMEL} = \frac{C_{D-avg}}{0.079} + \frac{C_{C-avg}}{0.012} \leq 1.0$$
$C_{D\text{-}avg}$ = average monthly diazinon effluent concentration in µg/L
$C_{C\text{-}avg}$ = average monthly chlorpyrifos effluent concentration in µg/L

5 $$S_{MDEL} = \frac{C_{D-max}}{0.16} + \frac{C_{C-max}}{0.025} \leq 1.0$$
$C_{D\text{-}max}$ = maximum daily diazinon effluent concentration in µg/L
$C_{C\text{-}max}$ = maximum daily chlorpyrifos effluent concentration in µg/L

6 Applied as a 7-day median effluent limitation.

7 Not to be exceeded more than once in any 30-day period.

8 The total calendar annual load of methylmercury shall not exceed 0.77 grams.

9 Average daily dissolved oxygen shall not be less than 5 mg/L.

E. Interim Effluent Limitations

1. **Compliance Schedule for Mercury.** The permit limitations for methylmercury are more stringent than the limitations previously imposed. These new limitations are based on the Basin Plan's Delta Mercury Control Program that became effective on 20 October 2011. The Discharger has complied with the application requirements in paragraph 4 of the State Water Board's Compliance Schedule Policy, and the Discharger's application demonstrates the need for additional time to implement actions to comply with the new limitations, as described below. Therefore, a compliance schedule for compliance with the effluent limitations for methylmercury is established in this Order.

   A compliance schedule is necessary because the Discharger must implement actions, including a Phase 1 Methylmercury Control Study and possible facility upgrades to comply with the final effluent limitations.

The Discharger has made diligent efforts to quantify pollutant levels in the discharge and the sources of the pollutant in the waste stream, and the results of those efforts. The Discharger is currently implementing a pollution prevention plan for mercury that was submitted to the Central Valley Water Board on 21 June 2012.

The compliance schedule is as short as possible. The Central Valley Water Board will use the Phase 1 Control Studies' results and other information to consider amendments to the Delta Mercury Control Program during the Phase 1 Delta Mercury Control Program Review. Therefore, at this time it is uncertain what measures must be taken to consistently comply with the waste load allocation for methylmercury. The interim effluent limits and final compliance date may be modified at the completion of Phase 1.

Interim performance-based limitations have been established in this Order in accordance with the Delta Mercury Control Program. The interim limitations were determined as described in section IV.E.2., below, and are in effect through until the final limitations take effect.

2. **Interim Limits for Total Mercury.** During Phase 1, the Delta Mercury Control Program requires POTWs to limit their discharges of inorganic (total) mercury to facility performance-based levels. The interim inorganic (total) mercury effluent mass limit is to be derived using current, representative data and shall not exceed the 99.9th percentile of 12-month running effluent inorganic (total) mercury loads (lbs/year). At the end of Phase 1, the interim inorganic (total) mercury mass limit will be re-evaluated and modified as appropriate.

   The interim limitations for total mercury in this Order are based on the current treatment plant performance. In developing the interim limitation, where there are 10 sampling data points or more, sampling and laboratory variability is accounted for by establishing interim limits that are based on normally distributed data where 99.9% of the data points will lie within 3.3 standard deviations of the mean (Basic Statistical Methods for Engineers and Scientists, Kennedy and Neville, Harper and Row). Therefore, the 99.9^{th} percentile was determined using the mean plus 3.3 standard deviations of the available data.

   Total mercury effluent data collected since the operation of tertiary filtration, from August 2008 through December 2011, was used in the determination of the performance-based interim effluent limits. 12-month running mercury loads were calculated, the average and standard deviation of the 12-month running mercury loads were determined, and used to calculate the 99.9^{th} percentile.

   The Central Valley Water Board finds that the Discharger can undertake source control and treatment plant measures to maintain compliance with the interim limitations included in this Order. Interim limitations are established when compliance with final effluent limitations cannot be achieved by the existing discharge. Discharge of constituents in concentrations in excess of the final effluent limitations, but in compliance with the interim effluent limitations, can

significantly degrade water quality and adversely affect the beneficial uses of the receiving stream on a long-term basis. The interim limitations, however, establish an enforceable ceiling concentration until compliance with the effluent limitation can be achieved.

The following table summarizes the calculations of the interim effluent limitations for total mercury:

Table F-16. Interim Effluent Limitation Calculation Summary

Parameter	Units	Maximum Annual Effluent Loading	Mean	Standard Deviation	Number of Samples	Interim Limitation
Total Mercury	g/yr	40.4	27.3	4.02	45	41

F. Land Discharge Specifications (see Order R5-2007-0038)

G. Reclamation Specifications (Not Applicable)

V. RATIONALE FOR RECEIVING WATER LIMITATIONS

Basin Plan water quality objectives to protect the beneficial uses of surface water and groundwater include numeric objectives and narrative objectives, including objectives for chemical constituents, toxicity, and tastes and odors. The toxicity objective requires that surface water and groundwater be maintained free of toxic substances in concentrations that produce detrimental physiological responses in humans, plants, animals, or aquatic life. The chemical constituent objective requires that surface water and groundwater shall not contain chemical constituents in concentrations that adversely affect any beneficial use or that exceed the maximum contaminant levels (MCLs) in Title 22, CCR. The tastes and odors objective states that surface water and groundwater shall not contain taste- or odor-producing substances in concentrations that cause nuisance or adversely affect beneficial uses. The Basin Plan requires the application of the most stringent objective necessary to ensure that surface water and groundwater do not contain chemical constituents, toxic substances, radionuclides, or taste and odor producing substances in concentrations that adversely affect domestic drinking water supply, agricultural supply, or any other beneficial use.

A. Surface Water

1. CWA section 303(a-c), requires states to adopt water quality standards, including criteria where they are necessary to protect beneficial uses. The Central Valley Water Board adopted water quality criteria as water quality objectives in the Basin Plan. The Basin Plan states that "[t]*he numerical and narrative water quality objectives define the least stringent standards that the Regional Water Board will apply to regional waters in order to protect the beneficial uses.*" The Basin Plan includes numeric and narrative water quality objectives for various beneficial uses and water bodies. This Order contains receiving surface water limitations based on the Basin Plan numerical and narrative water quality objectives for bacteria,

biostimulatory substances, color, chemical constituents, dissolved oxygen, floating material, oil and grease, pH, pesticides, radioactivity, salinity, suspended sediment, settleable substances, suspended material, tastes and odors, temperature, toxicity, and turbidity. The following receiving water limitations were removed from the existing Order R5-2007-36-01. Removal of these limitations will continue to be protective of beneficial uses, consistent with the maximum benefit to people of the State, which is consistent with antidegradation policies.

a. Aquatic communities and populations, including vertebrate, invertebrate, and plant species, to be degraded.

b. Esthetically undesirable discoloration.

c. Fungi, slimes, or other objectionable growths.

B. Groundwater. (Set forth in Order R5-2007-0038)

VI. RATIONALE FOR MONITORING AND REPORTING REQUIREMENTS

40 CFR 122.48 requires that all NPDES permits specify requirements for recording and reporting monitoring results. Water Code sections 13267 and 13383 authorize the Regional Water Boards to require technical and monitoring reports. The Monitoring and Reporting Program (Attachment E) of this Order, establishes monitoring and reporting requirements to implement federal and state requirements. The following provides the rationale for the monitoring and reporting requirements contained in the Monitoring and Reporting Program for the Facility.

A. Influent Monitoring

1. Domestic influent monitoring for the main treatment facility and industrial influent monitoring for the industrial treatment facility is required in this Order. Influent monitoring is required to collect data on the characteristics of the wastewater and to assess compliance with effluent limitations (e.g., BOD_5 and TSS reduction requirements). The monitoring frequencies for flow (continuous), pH (continuous), BOD_5 (daily), TSS (daily), TDS (weekly), and EC (weekly) have been retained from Order R5-2007-0036-01. Domestic influent monthly monitoring requirements for methylmercury have not been retained from Order R5-2007-0036-01 as they are not necessary to determine compliance with permit requirements. Methylmercury will be performed as part of the Methylmercury Control Studies required under Phase I of the Delta Mercury TMDL, separate from the NPDES permit.

B. Effluent Monitoring

1. Pursuant to the requirements of 40 CFR 122.44(i)(2) effluent monitoring is required for all constituents with effluent limitations. Effluent monitoring is necessary to assess compliance with effluent limitations, assess the effectiveness of the treatment process, and to assess the impacts of the discharge on the receiving stream and groundwater.

2. Effluent monitoring frequencies and sample types for flow (continuous), total residual chlorine (continuous), temperature (continuous), pH (continuous), BOD_5 (daily), TSS (daily), total coliform organisms (daily), settleable solids (monthly), dissolved oxygen (continuous), ammonia (weekly), nitrate (weekly), nitrite (weekly), total phosphorus (monthly), total kjeldahl nitrogen (monthly), total organic carbon (monthly), EC (weekly), TDS (monthly), dichlorobromomethane (monthly), chlorodibromomethane (monthly), mercury (monthly) and bis(2-ethylhexyl)phthalate (monthly) have been retained from Order R5-2007-0036-01to determine compliance with effluent limitations or the Facility's impact on the beneficial uses of the receiving water.

3. Monthly effluent monitoring for hardness (as $CaCO_3$) has been included in this Order to evaluate compliance with CTR hardness dependent metals.

4. This Order retains effluent limitations for copper from Order R5-2007-0036-01. Monitoring data over the term of Order R5-2007-0036-01 indicates reasonable potential to cause or contribute to an exceedance of water quality criteria based on the background concentration of the receiving water exceeding the CTR criteria. However, effluent monitoring data does not exceed either the BP objective or the CTR criteria. Therefore, this Order reduces the monitoring frequency for copper from monthly to quarterly.

5. Monthly effluent monitoring data collected over the existing permit term for aluminum, iron, and manganese) did not demonstrate reasonable potential to exceed water quality objectives/criteria. Thus, specific monitoring requirements for these parameters will only be required as part of the Effluent and Receiving Water Characterization Study (monitoring every other month during 3rd or 4th year of this Order). See the Monitoring and Reporting Program (Attachment E) of this Order.

6. Monthly effluent monitoring data collected over the existing permit term for oil and grease, bromoform, and chloroform did not demonstrate reasonable potential to exceed water quality objectives/criteria. Thus, specific monitoring requirements for these parameters have not been retained from Order R5-2007-0036-01.

7. **Chlorpyrifos and Diazinon.** This Order requires that pollutants be analyzed using the analytical methods described in 40 CFR Part 136 or an EPA approved Alternate Testing Procedure. However, where no methods are specified for a given pollutant that meets a specific reporting limit or method performance standard, an alternate method can be approved by the Central Valley Water Board. This Order requires either EPA 8141A or EPA 625M for chlorpyrifos and diazinon. These alternate analytical methods are necessary to determine compliance with the effluent limits for these constituents. Basin Plan water quality objectives for chlorpyrifos and diazinon are 0.015 µg/L and 0.1 µg/L, respectively (as a 4-day average. See Attachment F, Section IV.C.3.b.i.(a) for more information). Therefore, chlorpyrifos and diazinon must be analyzed using analytical methods that have a lower MDL than the Basin Plan water quality objectives.

8. California Water Code section 13176, subdivision (a), states: "The analysis of any material required by [Water Code sections 13000-16104] shall be performed by a laboratory that has accreditation or certification pursuant to Article 3 (commencing with Section 100825) of Chapter 4 of Part 1 of Division 101 of the Health and Safety Code." The Department of Public Health certifies laboratories through its Environmental Laboratory Accreditation Program (ELAP).

   Section 13176 cannot be interpreted in a manner that would violate federal holding time requirements that apply to NPDES permits pursuant to the Clean Water Act. (Wat. Code §§ 13370, subd. (c), 13372, 13377.) Section 13176 is inapplicable to NPDES permits to the extent it is inconsistent with Clean Water Act requirements. (Wat. Code § 13372, subd. (a).) The holding time requirements are 15 minutes for chlorine residual, dissolved oxygen, and pH, and immediate analysis is required for temperature. (40 C.F.R. § 136.3(e), Table II)

C. Whole Effluent Toxicity Testing Requirements

1. **Acute Toxicity.** 96-hour bioassay testing is required to demonstrate compliance with the effluent limitation for acute toxicity. Previous Order R5-2007-0036-01 required weekly 96-hour acute bioassays. Since upgrading to tertiary treatment, the Discharger has demonstrated consistent compliance with the acute toxicity effluent limits. Therefore, the monitoring frequency for the 96-hour acute bioassays has been reduced to monthly in this Order.

   Acute toxicity testing shall be conducted in accordance with USEPA's Methods for Measuring the Acute Toxicity of Effluents and Receiving Waters to Freshwater and Marine Organisms, October 2002 (EPA-821-R-02-012, Fifth Edition). EPA's acute toxicity testing method allows the use of either the test species *Pimephales promelas* (fathead minnow) or *Oncorhynchus my*kiss (rainbow trout). Due to the presence of salmon and steelhead in Old River, this Order requires the use of *Oncorhynchus my*kiss (rainbow trout) as the test species.

2. **Chronic Toxicity.** Quarterly chronic whole effluent toxicity testing is required in order to demonstrate compliance with the Basin Plan's narrative toxicity objective. This is consistent with previous Order R5-2007-0036-01

D. Receiving Water Monitoring

1. Surface Water

Receiving water monitoring is necessary to assess compliance with receiving water limitations and to assess the impacts of the discharge on the receiving stream.

2. **Groundwater.** (Set forth in Order R5-2007-0038)

E. Other Monitoring Requirements

1. Biosolids Monitoring. (Set forth in Order R5-2007-0038)

Biosolids monitoring is required to ensure compliance with the biosolids disposal requirements contained in the Special Provision contained in section VI.C.6.a. of this Order. Biosolids disposal requirements are imposed pursuant to 40 CFR Part 503 to protect public health and prevent groundwater degradation.

2. Water Supply Monitoring

Water supply monitoring is required to evaluate the source of constituents in the wastewater.

3. Effluent and Receiving Water Characterization Study.

An effluent and receiving water monitoring study is required to ensure adequate information is available for the next permit renewal. During the third or fourth year of this permit term, the Discharger is required to conduct monthly monitoring of the effluent at EFF-001 and of the receiving water at RSW-001 for all priority pollutants and other constituents of concern as described in Attachment I. Dioxin and furan sampling shall be performed twice during the year, as described in Attachment J.

VII. RATIONALE FOR PROVISIONS

A. Standard Provisions

Standard Provisions, which apply to all NPDES permits in accordance with 40 CFR 122.41, and additional conditions applicable to specified categories of permits in accordance with 40 CFR 122.42, are provided in Attachment D. The discharger must comply with all standard provisions and with those additional conditions that are applicable under 40 CFR 122.42.

40 CFR 122.41(a)(1) and (b) through (n) establish conditions that apply to all State-issued NPDES permits. These conditions must be incorporated into the permits either expressly or by reference. If incorporated by reference, a specific citation to the regulations must be included in the Order. 40 CFR 123.25(a)(12) allows the state to omit or modify conditions to impose more stringent requirements. In accordance with 40 CFR 123.25, this Order omits federal conditions that address enforcement authority specified in 40 CFR 122.41(j)(5) and (k)(2) because the enforcement authority under the Water Code is more stringent. In lieu of these conditions, this Order incorporates by reference Water Code section 13387(e).

B. Special Provisions

1. Reopener Provisions

a. Mercury. The Delta Mercury Control Program was designed to proceed in two phases. Phase 1 spans a period of approximately nine years. Phase 1

emphasizes studies and pilot projects to develop and evaluate management practices to control methylmercury. At the end of Phase 1, the Central Valley Water Board will conduct a Phase 1 Delta Mercury Control Program Review that considers: modification of methylmercury goals, objectives, allocations and/or the Final Compliance Date; implementation of management practices and schedules for methylmercury controls; and adoption of a mercury offset program for dischargers who cannot meet their load and waste load allocations after implementing all reasonable load reduction strategies. The fish tissue objectives, the linkage analysis between objectives and sources, and the attainability of the allocations will be re-evaluated based on the findings of Phase 1 control studies and other information. The linkage analysis, fish tissue objectives, allocations, and time schedules may be adjusted at the end of Phase 1, or subsequent program reviews, as appropriate. Therefore, this Order may be reopened to address changes to the Delta Mercury Control Program.

b. **Pollution Prevention.** This Order requires the Discharger prepare pollution prevention plans following Water Code section 13263.3(d)(3) for salinity. This reopener provision allows the Central Valley Water Board to reopen this Order for addition and/or modification of effluent limitations and requirements for these constituents based on a review of the pollution prevention plans.

c. **Whole Effluent Toxicity.** This Order requires the Discharger to investigate the causes of, and identify corrective actions to reduce or eliminate effluent toxicity through a Toxicity Reduction Evaluation (TRE). This Order may be reopened to include a numeric chronic toxicity limitation, a new acute toxicity limitation, and/or a limitation for a specific toxicant identified in the TRE. Additionally, if the State Water Board revises the SIP's toxicity control provisions, this Order may be reopened to be consistent with the new provisions.

d. **Water Effects Ratio (WER) and Metal Translators.** A default WER of 1.0 has been used in this Order for calculating CTR criteria for applicable priority pollutant inorganic constituents. In addition, default dissolved-to-total metal translators have been used to convert water quality objectives from dissolved to total recoverable when developing effluent limitations for non-priority pollutant metals. If the Discharger performs studies to determine site-specific WERs and/or site-specific dissolved-to-total metal translators, this Order may be reopened to modify the effluent limitations for the applicable inorganic constituents.

e. **Bay-Delta Plan South Salinity Objectives Update.** The State Water Board is currently in the process of updating the South Delta Salinity Objectives contained in the Bay-Delta Plan. The updated salinity objectives may result in needed changes to the salinity requirements in this Order. Therefore, this Order may be reopened to modify salinity requirements, as appropriate, in accordance with changes to the Bay-Delta Plan.

2. Special Studies and Additional Monitoring Requirements

a. Chronic Whole Effluent Toxicity Requirements. The Basin Plan contains a narrative toxicity objective that states, "All waters shall be maintained free of toxic substances in concentrations that produce detrimental physiological responses in human, plant, animal, or aquatic life." (Basin Plan at page III-8.00) Based on whole effluent chronic toxicity testing performed by the Discharger from February 2008 through November 2011, the discharge has reasonable potential to cause or contribute to an in-stream excursion above of the Basin Plan's narrative toxicity objective. Use the following paragraph and delete the one below it if the discharge exhibits reasonable potential.

This provision requires the Discharger to develop a TRE Workplan in accordance with USEPA guidance. In addition, the provision provides a numeric toxicity monitoring trigger and requirements for accelerated monitoring, as well as, requirements for TRE initiation if toxicity has been demonstrated.

Monitoring Trigger. A numeric toxicity monitoring trigger of **> 1** TUc (where TUc = 100/NOEC) is applied in the provision, because this Order does not allow any dilution for the chronic condition. Therefore, a TRE is triggered when the effluent exhibits toxicity at 100% effluent.

Accelerated Monitoring. The provision requires accelerated WET testing when a regular WET test result exceeds the monitoring trigger. The purpose of accelerated monitoring is to determine, in an expedient manner, whether there is toxicity before requiring the implementation of a TRE. Due to possible seasonality of the toxicity, the accelerated monitoring should be performed in a timely manner, preferably taking no more than 2 to 3 months to complete.

The provision requires accelerated monitoring consisting of four chronic toxicity tests in a six-week period (i.e., one test every two weeks) using the species that exhibited toxicity. Guidance regarding accelerated monitoring and TRE initiation is provided in the *Technical Support Document for Water Quality-based Toxics Control,* EPA/505/2-90-001, March 1991 (TSD). The TSD at page 118 states, "*EPA recommends if toxicity is repeatedly or periodically present at levels above effluent limits more than 20 percent of the time, a TRE should be required.*" Therefore, four accelerated monitoring tests are required in this provision. If no toxicity is demonstrated in the four accelerated tests, then it demonstrates that toxicity is not present at levels above the monitoring trigger more than 20 percent of the time (only 1 of 5 tests are toxic, including the initial test). However, notwithstanding the accelerated monitoring results, if there is adequate evidence of effluent toxicity (i.e. toxicity present exceeding the monitoring trigger more than 20 percent of the time), the Executive Officer may require that the Discharger initiate a TRE.

See the WET Accelerated Monitoring Flow Chart (Figure F-2), below, for further clarification of the accelerated monitoring requirements and for the decision points for determining the need for TRE initiation.

TRE Workplan. The Discharger submitted a TRE Workplan that was determined to be sufficient and was approved by the Executive Officer.

Figure F-2
WET Accelerated Monitoring Flow Chart

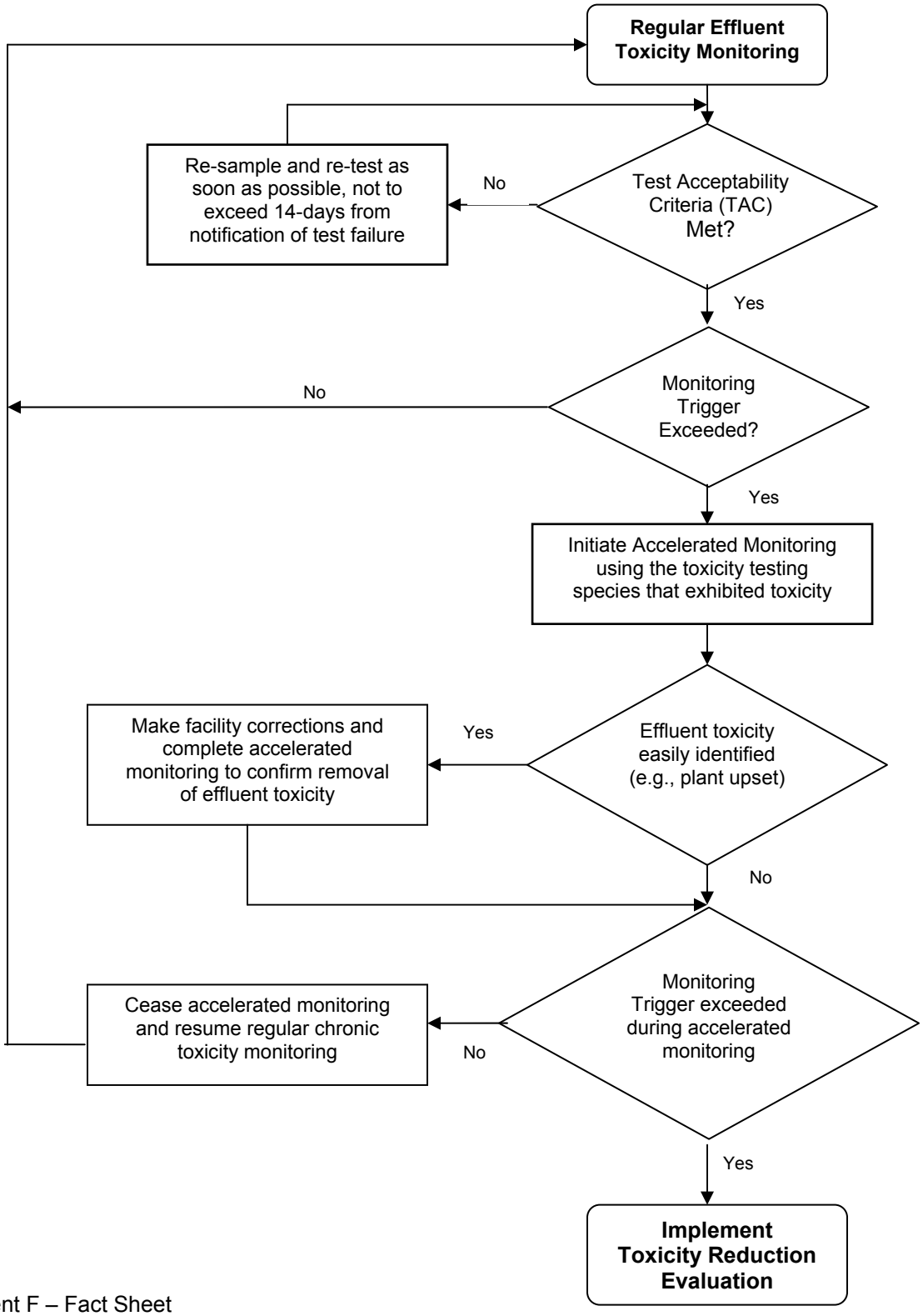

b. **Phase 1 Methylmercury Control Study.** The Basin Plan's Delta Mercury Control Program requires NPDES dischargers, working with other stakeholders, to conduct methylmercury control studies (Control Studies) to evaluate existing control methods and, as needed, develop additional control methods that could be implemented to achieve their methylmercury load and waste load allocations. Control Studies can be developed through a stakeholder group approach or other collaborative mechanism, or by individual dischargers. By letter dated 16 April 2012, the Discharger agreed to participate in the Central Valley Clean Water Association (CVCWA) Coordinated Methylmercury Control Study (Study).

The Central Valley Water Board will use the Phase 1 Control Studies' results and other information to consider amendments to the Delta Mercury Control Program during the Phase 1 Delta Mercury Control Program Review. The objective of the Control Studies is to evaluate existing control methods and, as needed, develop additional control methods that could be implemented to achieve the methylmercury load and waste load allocation. In accordance with the Delta Mercury Control Plan, a work plan shall be submitted by **20 April 2013**.

The Central Valley Water Board commits to supporting an Adaptive Management approach. The adaptive management approach includes the formation of a Stakeholder Group(s) and a Technical Advisory Committee (TAC).

The study work plan will be reviewed and approval by the TAC and subsequently approved by the Executive Officer. The Discharge shall immediately implement the work plan upon Executive Officer approval, and a progress report shall be submitted by **20 October 2015.**

The Study shall evaluate the feasibility of reducing sources more than the minimum amount needed to achieve the methylmercury allocation. The Study also may include an evaluation of innovative actions, watershed approaches, offsets projects, and other short and long-term actions that result in reducing inorganic (total) mercury and methylmercury to address the accumulation of methylmercury in fish tissue and to reduce methylmercury exposure. The Study may evaluate the effectiveness of using inorganic (total) mercury controls to control methylmercury discharges.

The Study shall include a description of methylmercury and/or inorganic (total) mercury management practices identified in Phase 1; an evaluation of the effectiveness, and costs, potential environmental effects, and overall feasibility of the control actions. The Study shall also include proposed implementation plans and schedules to comply with methylmercury allocations as soon as possible. The Study shall be submitted by **20 October 2018.**

The Executive Officer may authorize extending the Study due date. The Executive Officer may, after public notice, extend the due date up to two years if the Discharger demonstrates it is making significant progress towards developing, implementing and/or completing the Study and reasonable attempts have been made to secure funding for the Study, but the Discharger has experienced severe budget shortfalls.

3. Best Management Practices and Pollution Prevention

a. Pollution Prevention Plan for Mercury. The Basin Plan's Delta Mercury Control Plan requires NPDES permitted facilities to submit and implement pollutant minimization programs for mercury. The Discharger submitted a pollution prevention plan for mercury dated 17 July 2012. The Discharger shall update and implement a pollution prevention plan for mercury in accordance with Water Code section 13263.3(d)(3), per the compliance schedule in this Order for methylmercury (Section VI.C.7.a). The minimum requirements for the pollution prevention plan are outlined in the Fact Sheet (Attachment F section VII.B.3.c). Progress reports shall be submitted annually in accordance with the Monitoring and Reporting Program *(Attachment E section X.D.1.).* The progress reports shall discuss the effectiveness of the PPP in the reduction of mercury in the discharge, include a summary of mercury and methylmercury monitoring results, and discuss updates to the PPP.

b. Mercury Exposure Reduction Program. The Basin Plan's Delta Mercury Control Program requires dischargers to participate in a mercury Exposure Reduction Program. The Exposure Reduction Program is needed to address public health impacts of mercury in Delta fish, including activities that reduce actual and potential exposure of and mitigate health impacts to those people and communities most likely to be affected by mercury in Delta caught fish, such as subsistence fishers and their families.

The Exposure Reduction Program must include elements directed toward:

- Developing and implementing community-driven activities to reduce mercury exposure;
- Raising awareness of fish contamination issues among people and communities most likely affected by mercury in Delta-caught fish such as subsistence fishers and their families;
- Integrating community-based organizations that serve Delta fish consumers, Delta fish consumers, tribes, and public health agencies in the design and implementation of an exposure reduction program;
- Identifying resources, as needed, for community-based organizations and tribes to participate in the Program;

- Utilizing and expanding upon existing programs and materials or activities in place to reduce mercury, and as needed, create new materials or activities; and

- Developing measures for program effectiveness.

This Order requires the Discharger participate in a mercury Exposure Reduction Program in accordance with the Delta Mercury Control Program. The Discharger, either individually or collectively with other Delta dischargers, shall submit an exposure reduction work plan for Executive Officer approval by **20 October 2013**. The objective of the Exposure Reduction Program is to reduce mercury exposure of Delta fish consumers most likely affected by mercury. The work plan shall address the Exposure Reduction Program objective, elements, and the Discharger's coordination with other stakeholders. The Discharger shall integrate or, at minimum, provide good-faith opportunities for integration of community-based organizations, tribes, and consumers of Delta fish into planning, decision making, and implementation of exposure reduction activities. **The Discharger shall implement the work plan within six months of Executive Officer Approval of the work plan.**

c. **Salinity Reduction Plan.** The Discharger is required to maintain a Salinity Reduction Plan submitted a Salinity Plan that describes the Discharger's approach to identify, evaluate, and implement measures to reduce salinity in the effluent discharge to Old River. The Discharger shall submit annual progress reports in accordance the Monitoring and Reporting Program (*Attachment E section X.D.1.)*. The Salinity Reduction Plan shall, at minimum, contain the following:

i. **Pollution Prevention Plan (PPP).** The Discharger submitted a PPP for salinity on 17 July 2012 that meets the requirements of Water Code section 13263.3(d)(3). The Discharger shall continue to implement the PPP and evaluate and update the PPP annually. The annual progress reports for the Salinity Reduction Plan shall include a discussion of the effectiveness of the PPP and any updates to the PPP.

ii. **Salinity Reduction Goal.** The Central Valley Water Board finds that a calendar annual average of 500 µmhos/cm as electrical conductivity increase over the calendar annual weighted average electrical conductivity of the City of Tracy's water supply is a reasonable increase due to consumptive use in the community. The annual progress reports for the Salinity Reduction Plan shall include a discussion of the progress in meeting the salinity reduction goal.

iii. **Best Practicable Treatment or Control (BPTC) Evaluation for Salinity.** The Discharger submitted a BPTC evaluation dated 13 September 2011. By **1 September 2016**, the Discharger shall update and submit a BPTC evaluation for salinity that considers new information that was not available at the time the September 2011 BPTC evaluation was developed.

iv. **Central Valley Salinity Alternatives for Long-Term Sustainability (CV-SALTS) Participation.** The Discharger shall participate in CV-SALTS. The annual progress reports for the Salinity Reduction Plan shall include a discussion of the Discharger's participation in CV-SALTS.

v. **Lower Salinity Water Supply Sources.** The Salinity Reduction Plan shall include a discussion of the Discharger's efforts to obtain lower salinity water supplies and the annual progress reports for the Salinity Reduction Plan shall include a discussion of the Discharger's efforts in this area.

The Discharger's primary approach to reduce salinity in the wastewater effluent has been to obtain surface water potable supplies to replace the use of the salty native groundwater from municipal production wells. The Discharger obtained additional surface water supplies, and in the span of just five years reduced salt in the potable water supply by approximately 5,000 tons per year. The following lists the chronology of the Discharger's specific efforts to reduce salt in the potable water supply:

1995	Began project to bring South San Joaquin Irrigation District's Stanislaus River water through 40 miles of pipeline to Tracy. In September 2005, water deliveries commenced.
2001	Entered into long-term agreement to purchase additional surface water from the Delta-Mendota Canal (DMC) to replace the highly saline native groundwater. Water became available in 2004.
2002	Initiated design of an expansion to the potable water treatment plant in order to process the additional DMC surface water. Construction was completed in 2007.
2005	Successfully commenced a pilot project to store surplus surface water supplies in the Semitropic Water Storage District in Kern County. The Discharger is currently preparing the environmental documentation to allow permanent storage to increase the reliability of the DMC surface water supplies and significantly reduce the need to utilize the highly saline native groundwater during periods of drought or other water shortages.
2008	Completed construction of a transmission pipeline that delivers the Stanislaus River water to a second location within Tracy, which comprises 62% of the water customers served in 2009.
2013	Discharger completed construction of an Aquifer Storage and Recovery (ASR) well pilot project in 2012. The Central Valley Water Board must approve pilot tests on injection of drinking water into the groundwater basin. The permanent ASR project is planned for 2013 upon completion of environmental review.

The Discharger's efforts to obtain lower salinity water supplies has resulted in reduced salinity levels as demonstrated in Figure F-3, below:

Figure F-3
Total Dissolved Solids
Annual Average Discharge Concentration

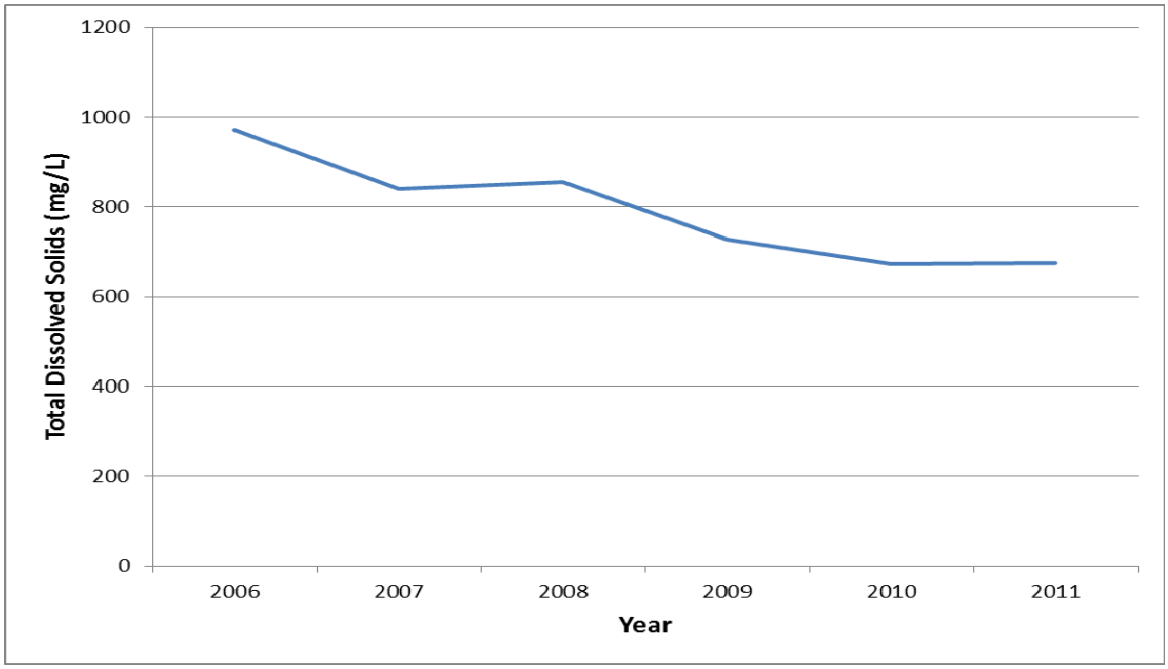

The Discharger is also evaluating a desalination and green energy project. The primary purpose of the proposed project is to construct and operate an approximately 1.2 MGD desalination plant (Plant) in the City of Tracy. The desalination plant would process treated effluent currently generated by the Facility to a quality that is suitable for discharge into the Delta. Project implementation would effectively remove salt from approximately 13 percent of the Facility's effluent. The treated desalination water would then be blended back into the remaining Facility effluent prior to discharge into the Delta. The newly blended and treated effluent will have lower salinity and will assist the Discharger in compliance with all applicable Delta salinity standards.

The operation of the desalination plant will require a heat energy supply. The proposed project includes a biomass cogeneration energy production component. The biomass energy component would utilize available sources of biomass, primarily agricultural residuals and urban wood waste, within a 50-mile radius of the site. The biomass energy component would generate approximately 16.4 megawatt-hours (MW/hr) of electricity, 15 MW/hr of which would be distributed and sold to the local energy grid.

The Discharger has also been investigating the sources of salinity in an effort to reduce concentrations to the Facility and is currently implementing a pollution prevention plan (PPP) for salinity. Through its PPP, the Discharger concluded that the primary controllable sources of salinity in the influent are "food packaging industries and water softeners," and that the "cheese processing

facility also appears to be a significant contributor of salinity." The Discharger completed and submitted a report in June 2011 that identified the sources of salinity and appropriate pollution prevention activities to reduce generation or discharge of salts.

Activities identified that could be undertaken to control salt discharges into the Facility include the following: 1) Public outreach program informing the City's residents about the new and improved water quality, 2) Work in partnership with water softener providers to advise residents of more appropriate devices, 3) Reduce infiltration and inflow along the domestic interceptor, 4) Implement local limits for industries contributing salt to the Facility that is 10% or higher, and 5) Under the pretreatment program, implement monitoring plans for users that have a net contribution of salt to the Facility that is 10% or higher.

The Discharger conducted a Salinity Best Practical Treatment or Control Study, which began in 2007 and concluded with a final report in September 2011. The study concluded that the TDS species with the highest concentrations were chloride, sulfate, and sodium. BMPs to reduce TDS concentrations included discontinuing coagulant aid which caused an increase in chloride and improving the disinfection process to reduce chlorine and sulfur dioxide use. The study indicates the most significant reduction in EC since the salinity BPTC study began is believed to be the result of increased water use from the South San Joaquin Irrigation District (SSJID) for the water source improvement program. Proven technologies were evaluated for salinity reduction including reverse osmosis, electrodialysis reversal, and nanofiltration. The 30-year life cycle cost analysis for these advanced treatment technologies resulted in estimated costs higher than $170 million. After consideration of technical, economic, environmental, and social factors, the salinity BPTC study concluded that source control options are the best practical control methods for the City at this time.

a. Water Code Section 13263.3(d)(3) Pollution Prevention Plans. A pollution prevention plans for mercury and salinity are required in this Order per Water Code section 13263.3(d)(1)(C). The minimum requirements for the pollution prevention plans include the following:

i. An estimate of all of the sources of a pollutant contributing, or potentially contributing, to the loadings of a pollutant in the treatment plant influent.

ii. An analysis of the methods that could be used to prevent the discharge of the pollutants into the Facility, including application of local limits to industrial or commercial dischargers regarding pollution prevention techniques, public education and outreach, or other innovative and alternative approaches to reduce discharges of the pollutant to the Facility. The analysis also shall identify sources, or potential sources, not within the ability or authority of the Discharger to control, such as pollutants in the potable water supply, airborne pollutants, pharmaceuticals, or

pesticides, and estimate the magnitude of those sources, to the extent feasible.

iii. An estimate of load reductions that may be attained through the methods identified in subparagraph ii.

iv. A plan for monitoring the results of the pollution prevention program.

v. A description of the tasks, cost, and time required to investigate and implement various elements in the pollution prevention plan.

vi. A statement of the Discharger's pollution prevention goals and strategies, including priorities for short-term and long-term action, and a description of the Discharger's intended pollution prevention activities for the immediate future.

vii. A description of the Discharger's existing pollution prevention programs.

viii. An analysis, to the extent feasible, of any adverse environmental impacts, including cross-media impacts or substitute chemicals that may result from the implementation of the pollution prevention program.

ix. An analysis, to the extent feasible, of the costs and benefits that may be incurred to implement the pollution prevention program.

4. **Construction, Operation, and Maintenance Specifications**

a. Turbidity Operational Requirements. Turbidity specifications have been included in this Order as a second indicator of the effectiveness of the treatment process and to assure compliance with the required level of treatment. Failure of the filtration system such that virus removal is impaired would normally result in increased particles in the effluent, which result in higher effluent turbidity. Turbidity has a major advantage for monitoring filter performance, allowing immediate detection of filter failure and rapid corrective action. These operational turbidity specifications are necessary to assess compliance with the DPH recommended Title 22 disinfection criteria, or equivalent.

5. Special Provisions for Municipal Facilities (POTWs Only)

a. Pretreatment Requirements.

i. The federal CWA section 307(b), and federal regulations, 40 CFR Part 403, require publicly owned treatment works to develop an acceptable industrial pretreatment program. A pretreatment program is required to prevent the introduction of pollutants, which will interfere with treatment plant operations or sludge disposal, and prevent pass through of pollutants that exceed water quality objectives, standards or permit

limitations. Pretreatment requirements are imposed pursuant to 40 CFR Part 403.

ii. The Discharger shall implement and enforce its approved pretreatment program and is an enforceable condition of this Order. If the Discharger fails to perform the pretreatment functions, the Central Valley Water Board, the State Water Board or USEPA may take enforcement actions against the Discharger as authorized by the CWA.

b. Collection System. The State Water Board issued General Waste Discharge Requirements for Sanitary Sewer Systems, Water Quality Order 2006-0003-DWQ (General Order) on 2 May 2006. The General Order requires public agencies that own or operate sanitary sewer systems with greater than one mile of pipes or sewer lines to enroll for coverage under the General Order. The General Order requires agencies to develop sanitary sewer management plans (SSMPs) and report all sanitary sewer overflows (SSOs), among other requirements and prohibitions.

Furthermore, the General Order contains requirements for operation and maintenance of collection systems and for reporting and mitigating sanitary sewer overflows. Inasmuch that the Discharger's collection system is part of the system that is subject to this Order, certain standard provisions are applicable as specified in Provisions, section VI.C.5. For instance, the 24-hour reporting requirements in this Order are not included in the General Order. The Discharger must comply with this Order and separately with the requirements of the General Order, which are not incorporated herein by reference. The Discharger and public agencies that are discharging wastewater into the facility were required to obtain enrollment for regulation under the General Order by 1 December 2006.

6. Other Special Provisions

a. Ownership Change. To maintain the accountability of the operation of the Facility, the Discharger is required to notify the succeeding owner or operator of the existence of this Order by letter if, and when, there is any change in control or ownership of land or waste discharge facilities presently owned or controlled by the Discharger.

7. Compliance Schedules

a. Compliance Schedule for Methylmercury. The State Water Board adopted the Policy for Compliance Schedules in National Pollutant Discharge Elimination System Permits (Resolution 2008 0025), which is the governing Policy for compliance schedules in NPDES permits. A Discharger who seeks a compliance schedule must demonstrate additional time is necessary to implement actions to comply with a more stringent permit limitation. The Discharger must provide the following documentation as part of the application requirements:

a) Diligent efforts have been made to quantify pollutant levels in the discharge and the sources of the pollutant in the waste stream, and the results of those efforts;

b) Source control efforts are currently underway or completed, including compliance with any pollution prevention programs that have established;

c) A proposed schedule for additional source control measures or waste treatment;

d) Data demonstrating current treatment facility performance to compare against existing permit effluent limits, as necessary to determine which is the more stringent interim, permit effluent limit to apply if a schedule of compliance is granted;

e) The highest discharge quality that can reasonably be achieved until final compliance is attained;

f) The proposed compliance schedule is as short as possible, given the type of facilities being constructed or programs being implemented, and industry experience with the time typically required to construct similar facilities or implement similar programs; and

g) Additional information and analyses to be determined by the Regional Water Board on a case-by-case basis.

Based on information submitted with the Report of Waste Discharge, self-monitoring reports, pollution prevention plans, and other miscellaneous submittals, it has been demonstrated to the satisfaction of the Central Valley Water Board that the Discharger needs time to implement actions to comply with the new effluent limitations for methylmercury

The Delta Mercury Control Program is composed of two phases. Phase 1 spans from 20 October 2011 through the Phase I Delta Mercury Control Program Review, expected to conclude by October 2020. Phase 1 emphasizes studies and pilot projects to develop and evaluate management practices to control methylmercury. Phase 1 includes provisions for: implementing pollution minimization programs and interim mass limits for inorganic (total) mercury point sources in the Delta and Yolo Bypass; controlling sediment-bound mercury in the Delta and Yolo Bypass that may become methylated in agricultural lands, wetland, and open-water habitats; and reducing total mercury loading to San Francisco Bay, as required by the Water Quality Control Plan for the San Francisco Bay Basin.

At the end of Phase 1, the Central Valley Water Board will conduct a Phase 1 Delta Mercury Control Program Review that considers: modification of methylmercury goals, objectives, allocations and/or the Final Compliance Date;

implementation of management practices and schedules for methylmercury controls; and adoption of a mercury offset program for dischargers who cannot meet their load and waste load allocations after implementing all reasonable load reduction strategies. The review also will consider other potential public and environmental benefits and negative impacts (e.g., habitat restoration, flood protection, water supply, fish consumption) of attaining the allocations. The fish tissue objectives, the linkage analysis between objectives and sources, and the attainability of the allocations will be re-evaluated based on the findings of Phase 1 control studies and other information. The linkage analysis, fish tissue objectives, allocations, and time schedules shall be adjusted at the end of Phase 1, or subsequent program reviews, if appropriate.

Phase 2 begins after the Phase 1 Delta Mercury Control Program Review or by 20 October 22, whichever occurs first, and ends in 2030. During Phase 2, dischargers shall implement methylmercury control programs and continue inorganic (total) mercury reduction programs. Compliance monitoring and implementation of upstream control programs also shall occur in Phase 2.

The Compliance Schedule Policy requires that compliance schedules are as short as possible and may not exceed 10 years, except when *"…a permit limitation that implements or is consistent with the waste load allocations specified in a TMDL that is established through a Basin Plan amendment, provided that the TMDL implementation plan contains a compliance schedule or implementation schedule.*" As discussed above, the Basin Plan's Delta Mercury Control Program includes compliance schedule provisions and allows compliance with the waste load allocations for methylmercury by 2030. Until the Phase 1 Control Studies are complete and the Central Valley Water Board conducts the Phase 1 Delta Mercury Control Program Review, it is not possible to determine the compliance date for the Discharger that is as soon as possible. Therefore, this Order establishes a compliance schedule for the new, final, WQBELs for methylmercury with full compliance required by **31 December 2030**, which is consistent with the Final Compliance Date of the TMDL. At completion of the Phase 1 Delta Mercury Control Program Review, the final compliance date for this compliance schedule will be re-evaluated to ensure compliance is require as soon as possible.

VIII. PUBLIC PARTICIPATION

The Central Valley Water Board is considering the issuance of WDRs that will serve as an NPDES permit for the Facility. As a step in the WDR adoption process, the Central Valley Water Board staff has developed tentative WDRs. The Central Valley Water Board encourages public participation in the WDR adoption process.

A. Notification of Interested Parties

The Central Valley Water Board has notified the Discharger and interested agencies and persons of its intent to prescribe waste discharge requirements for the discharge and has provided them with an opportunity to submit their written comments and

recommendations. Notification was provided through publication of a Notice of Public Hearing in the Tri Valley Herald.

B. Written Comments

The staff determinations are tentative. Interested persons are invited to submit written comments concerning these tentative WDRs. Comments must be submitted either in person or by mail to the Executive Office at the Central Valley Water Board at the address above on the cover page of this Order.

To be fully responded to by staff and considered by the Central Valley Water Board, written comments must be received at the Central Valley Water Board offices by 5:00 p.m. on **26 October 2012**

C. Public Hearing

The Central Valley Water Board will hold a public hearing on the tentative WDRs during its regular Board meeting on the following date and time and at the following location:

Date:	**7 December 2012**
Time:	8:30 a.m.
Location:	Regional Water Quality Control Board, Central Valley Region 11020 Sun Center Dr., Suite #200 Rancho Cordova, CA 95670

Interested persons are invited to attend. At the public hearing, the Central Valley Water Board will hear testimony, if any, pertinent to the discharge, WDRs, and permit. Oral testimony will be heard; however, for accuracy of the record, important testimony should be in writing.

Please be aware that dates and venues may change. Our Web address is www.waterboards.ca.gov/centralvalley where you can access the current agenda for changes in dates and locations.

D. Waste Discharge Requirements Petitions

Any aggrieved person may petition the State Water Board to review the decision of the Central Valley Water Board regarding the final WDRs. The petition must be received by the State Water Board within 30 days of the Central Valley Water Board's action, and must be submitted to the following address:

State Water Resources Control Board
Office of Chief Counsel
P.O. Box 100, 1001 I Street
Sacramento, CA 95812-0100

E. Information and Copying

The Report of Waste Discharge, related documents, tentative effluent limitations and special provisions, comments received, and other information are on file and may be inspected at the address above at any time between 8:30 a.m. and 4:45 p.m., Monday through Friday. Copying of documents may be arranged through the Central Valley Water Board by calling (916) 464-3291.

F. Register of Interested Persons

Any person interested in being placed on the mailing list for information regarding the WDRs and NPDES permit should contact the Central Valley Water Board, reference this Facility, and provide a name, address, and phone number.

G. Additional Information

Requests for additional information or questions regarding this order should be directed to Kari Holmes at (916) 464-4843.

ATTACHMENT G – SUMMARY OF REASONABLE POTENTIAL ANALYSIS FOR CONSTITUENTS OF CONCERN [1]

Constituent	Units	MEC	B	C	CMC	CCC	Water & Org	Org. Only	Basin Plan	MCL	Reasonable Potential
Aluminum	mg/L	310	1900	200	750	750	N/A	N/A	N/A	200	No
Ammonia (as N)	mg/L	3.6	1								Yes
Bis(2-ethylhexyl)phthalate	µg/L	12	0.6	1.8	N/A	N/A	1.8	5.9	N/A	4	Yes
Chlorodibromomethane	µg/L	23	0.5	0.41	N/A	N/A	0.41	34	N/A	80	Yes
Chlorpyrifos	µg/L			0.1	0.02	0.014	N/A	N/A	0.1	N/A	Limited Data
Copper (total recoverable)	µg/L	5.9	7	3.8	5.2	3.8	1300	N/A	10	1000	Yes
Diazinon	µg/L			0.015	0.08	0.05	N/A	N/A	0.015	N/A	Limited Data
Dichlorobromomethane	µg/L	29	0.5	0.56	N/A	N/A	0.56	46	N/A	80	Yes
Dissolved Oxygen	mg/L								5[1]		No
Iron (total recoverable)	µg/L	54	4000	300	N/A	1000	N/A	N/A	300	300	No
Lead (total recoverable)	µg/L		1.5	0.8	21	0.8	N/A	N/A	N/A	15	Limited Data
Manganese	µg/L	20	290	50	N/A	N/A	N/A	100	50	50	No
Mercury (total recoverable)	ng/L	0.18	0.008	2	N/A	N/A	N/A	N/A	N/A	2	Yes
Methylmercury	ng/L	0.22	0.18						0.77[2]		Yes
Nitrate + Nitrite (as N)	mg/L			10	N/A	N/A	N/A	N/A	N/A	10	Yes

General Note: All inorganic concentrations are given as a total recoverable.
MEC = Maximum Effluent Concentration
B = Maximum Receiving Water Concentration or lowest detection level, if non-detect
C = Criterion used for Reasonable Potential Analysis
CMC = Criterion Maximum Concentration (CTR or NTR)
CCC = Criterion Continuous Concentration (CTR or NTR)
Water & Org = Human Health Criterion for Consumption of Water & Organisms (CTR or NTR)
Org. Only = Human Health Criterion for Consumption of Organisms Only (CTR or NTR)
Basin Plan = Numeric Site-specific Basin Plan Water Quality Objective
MCL = Drinking Water Standards Maximum Contaminant Level
NA = Not Available
ND = Non-detect

Footnotes:
(1) Dissolved oxygen concentrations shall not be reduced below 5 mg/L.
(2) The total calendar annual load of methylmercury shall not exceed 0.77 grams.

ATTACHMENT H – CALCULATION OF WQBELS

Parameter	Units	Most Stringent Criteria			Dilution Factors			HH Calculations			Aquatic Life Calculations									Final Effluent Limitations	
		HH	CMC	CCC	HH	CMC	CCC	ECA_{HH} = $AMEL_{HH}$	AMEL/MDEL $Multiplier_{HH}$	$MDEL_{HH}$	ECA $Multiplier_{acute}$	LTA_{acute}	ECA $Multiplier_{chronic}$	$LTA_{chronic}$	Lowest LTA	AMEL $Multiplier_{95}$	$AMEL_{AL}$	MDEL $Multiplier_{99}$	$MDEL_{AL}$	Lowest AMEL	Lowest MDEL
Ammonia Nitrogen, Total (as N)	mg/L	--	2.14	1.42	--	--	--	--	--	--	0.54	1.2	0.89	1.3	1.2	1.13	1.3	1.84	2.1	1.3	2.1
Bis (2-ethylhexyl) phthalate	µg/L	1.8	--	--	7.5:1	--	--	12.19	3.99	48.7	--	--	--	--	--	--	--	--	--	12	49
Copper (total recoverable)	µg/L	--	10.4[1]	--	--	--	--	--	--	--	--	--	--	--	--	--	--	--	--	--	10.4[1]
Chlorodibromomethane	µg/L	0.41	--	--	20:1	--	--	8.01	2.21	18	--	--	--	--	--	--	--	--	--	8	18
Dichlorobromomethane	µg/L	0.56	--	--	20:1	--	--	10.56	2.19	23	--	--	--	--	--	--	--	--	--	11	23

[1] A more stringent MDEL of 10.4 µg/L is established in this Order based on the Basin Plan Objective (see Section IV.c.3.d.iv of the Fact Sheet for a detailed discussion).

ATTACHMENT I – EFFLUENT AND RECEIVING WATER CHARACTERIZATION STUDY

I. Background. Sections 2.4.1 through 2.4.4 of the SIP provide minimum standards for analyses and reporting. (Copies of the SIP may be obtained from the State Water Resources Control Board, or downloaded from http://www.waterboards.ca.gov/iswp/index.html). To implement the SIP, effluent and receiving water data are needed for all priority pollutants. Effluent and receiving water pH and hardness are required to evaluate the toxicity of certain priority pollutants (such as heavy metals) where the toxicity of the constituents varies with pH and/or hardness. Section 3 of the SIP prescribes mandatory monitoring of dioxin congeners. In addition to specific requirements of the SIP, the Central Valley Water Board is requiring the following monitoring:

A. Drinking water constituents. Constituents for which drinking water Maximum Contaminant Levels (MCLs) have been prescribed in the California Code of Regulation are included in the *Water Quality Control Plan, Fourth Edition, for the Sacramento and San Joaquin River Basins* (Basin Plan). The Basin Plan defines virtually all surface waters within the Central Valley Region as having existing or potential beneficial uses for municipal and domestic supply. The Basin Plan further requires that, at a minimum, water designated for use as domestic or municipal supply shall not contain concentrations of chemical constituents in excess of the MCLs contained in the California Code of Regulations.

B. Effluent and receiving water temperature. This is both a concern for application of certain temperature-sensitive constituents, such as fluoride, and for compliance with the Basin Plan's thermal discharge requirements.

C. Effluent and receiving water hardness and pH. These are necessary because several of the CTR constituents are hardness and pH dependent.

D. Dioxin and furan sampling. Section 3 of the SIP has specific requirements for the collection of samples for analysis of dioxin and furan congeners, which are detailed in Attachment J. Pursuant to Section 13267 of the California Water Code, this Order includes a requirement for the Discharger to submit monitoring data for the effluent and receiving water as described in Attachment J.

II. Monitoring Requirements.

A. Bi-Monthly Monitoring. Bi-monthly (i.e., every other month) samples shall be collected from the effluent and upstream receiving water (EFF-001 and RSW-001) and analyzed for the constituents listed in Table I-1. Bi-monthly monitoring shall be conducted for 1 year, during the third or fourth year of the permit term (i.e., 6 samples, collected every other month for one year) and the results of such monitoring shall be submitted to the Central Valley Water Board within 6 months of the final monitoring event. Each individual monitoring event shall provide representative sample results for the effluent and upstream receiving water.

B. Semi-annual Monitoring (dioxins and furans only). Semi-annual monitoring is required for dioxins and furans, as specified in Attachment J. The results of dioxin and furan monitoring shall be submitted to the Central Valley Water Board with the monitoring data discussed in subsection A, above.

C. Concurrent Sampling. Effluent and receiving water sampling shall be performed at approximately the same time, on the same date.

D. Sample type. All effluent samples shall be taken as 24-hour flow proportioned composite samples. All receiving water samples shall be taken as grab samples.

E. Additional Monitoring/Reporting Requirements. The Discharger shall conduct the monitoring and reporting in accordance with the General Monitoring Provisions and Reporting Requirements in Attachment E.

Table I-1. Priority Pollutants and Other Constituents of Concern

CTR #	Constituent	CAS Number	Maximum Reporting Level[1] µg/L or noted
28	1,1-Dichloroethane	75343	1
30	1,1-Dichloroethene	75354	0.5
41	1,1,1-Trichloroethane	71556	2
42	1,1,2-Trichloroethane	79005	0.5
37	1,1,2,2-Tetrachloroethane	79345	0.5
75	1,2-Dichlorobenzene	95501	2
29	1,2-Dichloroethane	107062	0.5
	cis-1,2-Dichloroethene	156592	
31	1,2-Dichloropropane	78875	0.5
101	1,2,4-Trichlorobenzene	120821	1
76	1,3-Dichlorobenzene	541731	2
32	1,3-Dichloropropene	542756	0.5
77	1,4-Dichlorobenzene	106467	2
17	Acrolein	107028	2
18	Acrylonitrile	107131	2
19	Benzene	71432	0.5
20	Bromoform	75252	2
34	Bromomethane	74839	2
21	Carbon tetrachloride	56235	0.5
22	Chlorobenzene (mono chlorobenzene)	108907	2

[1] The reporting levels required in these tables for priority pollutant constituents are established based on Section 2.4.2 and Appendix 4 of the SIP.

CTR #	Constituent	CAS Number	Maximum Reporting Level[1] µg/L or noted
24	Chloroethane	75003	2
25	2- Chloroethyl vinyl ether	110758	1
26	Chloroform	67663	2
35	Chloromethane	74873	2
23	Dibromochloromethane	124481	0.5
27	Dichlorobromomethane	75274	0.5
36	Dichloromethane	75092	2
33	Ethylbenzene	100414	2
88	Hexachlorobenzene	118741	1
89	Hexachlorobutadiene	87683	1
91	Hexachloroethane	67721	1
94	Naphthalene	91203	10
38	Tetrachloroethene	127184	0.5
39	Toluene	108883	2
40	trans-1,2-Dichloroethylene	156605	1
43	Trichloroethene	79016	2
44	Vinyl chloride	75014	0.5
	Methyl-tert-butyl ether (MTBE)	1634044	
	Trichlorofluoromethane	75694	
	1,1,2-Trichloro-1,2,2-Trifluoroethane	76131	
	Styrene	100425	
	Xylenes	1330207	
60	1,2-Benzanthracene	56553	5
85	1,2-Diphenylhydrazine	122667	1
45	2-Chlorophenol	95578	5
46	2,4-Dichlorophenol	120832	5
47	2,4-Dimethylphenol	105679	2
49	2,4-Dinitrophenol	51285	5
82	2,4-Dinitrotoluene	121142	5
55	2,4,6-Trichlorophenol	88062	10
83	2,6-Dinitrotoluene	606202	5
50	2-Nitrophenol	25154557	10
71	2-Chloronaphthalene	91587	10
78	3,3'-Dichlorobenzidine	91941	5
62	3,4-Benzofluoranthene	205992	10
52	4-Chloro-3-methylphenol	59507	5

CTR #	Constituent	CAS Number	Maximum Reporting Level[1] µg/L or noted
48	4,6-Dinitro-2-methylphenol	534521	10
51	4-Nitrophenol	100027	10
69	4-Bromophenyl phenyl ether	101553	10
72	4-Chlorophenyl phenyl ether	7005723	5
56	Acenaphthene	83329	1
57	Acenaphthylene	208968	10
58	Anthracene	120127	10
59	Benzidine	92875	5
61	Benzo(a)pyrene (3,4-Benzopyrene)	50328	2
63	Benzo(g,h,i)perylene	191242	5
64	Benzo(k)fluoranthene	207089	2
65	Bis(2-chloroethoxy) methane	111911	5
66	Bis(2-chloroethyl) ether	111444	1
67	Bis(2-chloroisopropyl) ether	39638329	10
68	Bis(2-ethylhexyl) phthalate	117817	5
70	Butyl benzyl phthalate	85687	10
73	Chrysene	218019	5
81	Di-n-butylphthalate	84742	10
84	Di-n-octylphthalate	117840	10
74	Dibenzo(a,h)-anthracene	53703	0.1
79	Diethyl phthalate	84662	10
80	Dimethyl phthalate	131113	10
86	Fluoranthene	206440	10
87	Fluorene	86737	10
90	Hexachlorocyclopentadiene	77474	5
92	Indeno(1,2,3-c,d)pyrene	193395	0.05
93	Isophorone	78591	1
98	N-Nitrosodiphenylamine	86306	1
96	N-Nitrosodimethylamine	62759	5
97	N-Nitrosodi-n-propylamine	621647	5
95	Nitrobenzene	98953	10
53	Pentachlorophenol	87865	1
99	Phenanthrene	85018	5
54	Phenol	108952	1
100	Pyrene	129000	10
	Aluminum	7429905	

CTR #	Constituent	CAS Number	Maximum Reporting Level[1] µg/L or noted
1	Antimony	7440360	5
2	Arsenic	7440382	10
15	Asbestos	1332214	
	Barium	7440393	
3	Beryllium	7440417	2
4	Cadmium	7440439	0.5
5a	Chromium (III)	16065831	50
5b	Chromium (VI)	18540299	10
6	Copper	7440508	0.5
14	Cyanide	57125	5
	Fluoride	7782414	
	Iron	7439896	
7	Lead	7439921	0.5
8	Mercury	7439976	0.5
	Manganese	7439965	
	Molybdenum	7439987	
9	Nickel	7440020	20
10	Selenium	7782492	5
11	Silver	7440224	0.25
12	Thallium	7440280	1
	Tributyltin	688733	
13	Zinc	7440666	20
110	4,4'-DDD	72548	0.05
109	4,4'-DDE	72559	0.05
108	4,4'-DDT	50293	0.01
112	alpha-Endosulfan	959988	0.02
103	alpha-Hexachlorocyclohexane (BHC)	319846	0.01
	Alachlor	15972608	
102	Aldrin	309002	0.005
113	beta-Endosulfan	33213659	0.01
104	beta-Hexachlorocyclohexane	319857	0.005
107	Chlordane	57749	0.1
106	delta-Hexachlorocyclohexane	319868	0.005
111	Dieldrin	60571	0.01
114	Endosulfan sulfate	1031078	0.05
115	Endrin	72208	0.01

CTR #	Constituent	CAS Number	Maximum Reporting Level[1] µg/L or noted
116	Endrin Aldehyde	7421934	0.01
117	Heptachlor	76448	0.01
118	Heptachlor Epoxide	1024573	0.01
105	Lindane (gamma-Hexachlorocyclohexane)	58899	0.02
119	PCB-1016	12674112	0.5
120	PCB-1221	11104282	0.5
121	PCB-1232	11141165	0.5
122	PCB-1242	53469219	0.5
123	PCB-1248	12672296	0.5
124	PCB-1254	11097691	0.5
125	PCB-1260	11096825	0.5
126	Toxaphene	8001352	0.5
	Atrazine	1912249	
	Bentazon	25057890	
	Carbofuran	1563662	
	2,4-D	94757	
	Dalapon	75990	
	1,2-Dibromo-3-chloropropane (DBCP)	96128	
	Di(2-ethylhexyl)adipate	103231	
	Dinoseb	88857	
	Diquat	85007	
	Endothal	145733	
	Ethylene Dibromide	106934	
	Glyphosate	1071836	
	Methoxychlor	72435	
	Molinate (Ordram)	2212671	
	Oxamyl	23135220	
	Picloram	1918021	
	Simazine (Princep)	122349	
	Thiobencarb	28249776	
16	2,3,7,8-TCDD (Dioxin)	1746016	
	2,4,5-TP (Silvex)	93765	
	Diazinon	333415	
	Chlorpyrifos	2921882	
	Ammonia (as N)	7664417	
	Chloride	16887006	

CTR #	Constituent	CAS Number	Maximum Reporting Level[1] µg/L or noted
	Flow		
	Hardness (as $CaCO_3$)		
	Foaming Agents (MBAS)		
	Mercury, Methyl	22967926	
	Nitrate (as N)	14797558	
	Nitrite (as N)	14797650	
	pH		
	Phosphorus, Total (as P)	7723140	
	Specific conductance (EC)		
	Sulfate		
	Sulfide (as S)		
	Sulfite (as SO_3)		
	Temperature		
	Total Dissolved Solids (TDS)		

ATTACHMENT J – DIOXIN AND FURAN SAMPLING

The CTR includes criteria for 2,3,7,8-tetrachlorodibenzo-pdioxin (2,3,7,8-TCDD). In addition to this compound, there are many congeners of chlorinated dibenzodioxins (2,3,7,8-CDDs) and chlorinated dibenzofurans (2,3,7,8-CDFs) that exhibit toxic effects similar to those of 2,3,7,8-TCDD. The USEPA has published toxic equivalency factors (TEFs) for 17 of the congeners. The TEFs express the relative toxicities of the congeners compared to 2,3,7,8-TCDD (whose TEF equals 1.0). In June 1997, participants in a World Health Organization (WHO) expert meeting revised TEF values for 1,2,3,7,8-PentaCDD, OctaCDD, and OctaCDF. The current TEFs for the 17 congeners, which include the three revised values, are shown below:

Toxic Equivalency Factors (TEFs) for 2,3,7,8-TCDD Equivalents

Congener	TEF
2,3,7,8-TetraCDD	1
1,2,3,7,8-PentaCDD	1.0
1,2,3,4,7,8-HexaCDD	0.1
1,2,3,6,7,8-HexaCDD	0.1
1,2,3,7,8,9-HexaCDD	0.1
1,2,3,4,6,7,8-HeptaCDD	0.01
OctaCDD	0.0001
2,3,7,8-TetraCDF	0.1
1,2,3,7,8-PentaCDF	0.05
2,3,4,7,8-PentaCDF	0.5
1,2,3,4,7,8-HexaCDF	0.1
1,2,3,6,7,8-HexaCDF	0.1
1,2,3,7,8,9-HexaCDF	0.1
2,3,4,6,7,8-HexaCDF	0.1
1,2,3,4,6,7,8-HeptaCDF	0.01
1,2,3,4,7,8,9-HeptaCDF	0.01
OctaCDF	0.0001

The Discharger shall conduct effluent and receiving water monitoring for the 2,3,7,8-TCDD congeners listed above to assess the presence and amounts of the congeners being discharged and already present in the receiving water. Effluent and upstream receiving water shall be monitored for the presence of the 17 congeners once during dry weather and once during wet weather for 1 year within the term of the study.

The Discharger shall report, for each congener, the analytical results of the effluent and receiving water monitoring, including the quantifiable limit and the method detection limit, and the measured or estimated concentration.

In addition, the Discharger shall multiply each measured or estimated congener concentration by its respective TEF value and report the sum of these values.