CALIFORNIA REGIONAL WATER QUALITY CONTROL BOARD
CENTRAL VALLEY REGION

11020 Sun Center Drive, #200 Rancho Cordova, California 95670-6114
Phone (916) 464-3291 • Fax (916) 464-4645
http://www.waterboards.ca.gov/centralvalley

ORDER R5-2013-XXXX
NPDES NO. CA0079243

WASTE DISCHARGE REQUIREMENTS FOR THE CITY OF LODI
WHITE SLOUGH WATER POLLUTION CONTROL FACILITY
SAN JOAQUIN COUNTY

The following Discharger is subject to waste discharge requirements as set forth in this Order:

Table 1. Discharger Information

Discharger	**City of Lodi**
Name of Facility	**White Slough Water Pollution Control Facility, Lodi**
Facility Address	**12751 North Thornton Road**
	Lodi, CA 95242
	San Joaquin County
The U.S. Environmental Protection Agency (USEPA) and the Regional Water Quality Control Board have classified this discharge as a major discharge.	

The discharge by the City of Lodi from the discharge points identified below is subject to waste discharge requirements as set forth in this Order:

Table 2. Discharge Location

Discharge Point	Effluent Description	Discharge Point Latitude	Discharge Point Longitude	Receiving Water
001	Tertiary treated municipal effluent	38º, 05', 35" N	121º, 22', 48" W	Dredger Cut

Table 3. Administrative Information

This Order was adopted by the Regional Water Quality Control Board on:	**<Adoption Date>**
This Order shall become effective on:	**Adopt plus 50 days**
This Order shall expire on:	**<Expiration Date>**
The Discharger shall file a Report of Waste Discharge in accordance with title 23, California Code of Regulations, as application for issuance of new waste discharge requirements no later than:	**<180 days prior to the Order expiration date OR insert date>**

I, **PAMELA C. CREEDON**, Executive Officer, do hereby certify that this Order with all attachments is a full, true, and correct copy of an Order adopted by the California Regional Water Quality Control Board, Central Valley Region, on **<Adoption Date>**.

_____

CONTENTS

I. Facility Information 3
II. Findings 3
III. Discharge Prohibitions 11
IV. Effluent Limitations and Discharge Specifications 11
A. Effluent Limitations – Discharge Point No. 001 11
B. Land Discharge Specifications (Not Applicable) 13
C. Reclamation Specifications (Not Applicable) 13
V. Receiving Water Limitations 13
A. Surface Water Limitations 13
B. Groundwater Limitations (Not Applicable) 15
VI. Provisions 16
A. Standard Provisions 16
B. Monitoring and Reporting Program Requirements 20
C. Special Provisions 20
1. Reopener Provisions 20
2. Special Studies, Technical Reports and Additional Monitoring Requirements 22
3. Best Management Practices and Pollution Prevention 24
4. Construction, Operation and Maintenance Specifications 25
5. Special Provisions for Municipal Facilities (POTWs Only) 26
6. Other Special Provisions 28
7. Compliance Schedules 29
VII. Compliance Determination 31

Tables

Table 1. Discharger Information 1
Table 2. Discharge Location 1
Table 3. Administrative Information 1
Table 4. Facility Information 3
Table 5. Basin Plan Beneficial Uses 6
Table 6. Effluent Limitations 11

Attachments

Attachment A – Definitions A-1
Attachment B – Map B-1
Attachment C – Flow Schematic C-1
Attachment D – Standard Provisions D-1
Attachment E – Monitoring and Reporting Program E-1
Attachment F – Fact Sheet F-1
Attachment G – Summary of Reasonable Potential Analysis FOR CONSTITUENTS OF CONCERN [1] G-1
Attachment H – Calculation of WQBELs H-1
Attachment I – Effluent and Receiving Water Characterization I-1

I. FACILITY INFORMATION

The following Discharger is subject to waste discharge requirements as set forth in this Order:

Table 4. Facility Information

Discharger	City of Lodi
Name of Facility	White Slough Water Pollution Control Facility
Facility Address	12751 North Thornton Road
	Lodi, CA 95242
	San Joaquin County
Facility Contact, Title, and Phone	Mr. Larry Parlin, Deputy Public Works Director (209) 333-6740
Mailing Address	1331 South Ham Lane, Lodi, CA 95242
Type of Facility	Publicly Owned Treatment Works (POTW)
Facility Design Flow	8.5 million gallons per day (mgd) (average dry weather flow)

II. FINDINGS

The California Regional Water Quality Control Board, Central Valley Region (hereinafter Central Valley Water Board), finds:

A. Background. The City of Lodi (hereinafter Discharger) was authorized to discharge from the White Slough Water Pollution Control Facility (hereinafter Facility) pursuant to Order R5-2007-0113 and National Pollutant Discharge Elimination System (NPDES) Permit No. CA0079243. Order R5-2007-0113 regulated discharges to Dredger Cut, a water of the United States, and part of the Sacramento-San Joaquin Delta, and also regulated discharges to land. The Facility seasonally discharges to land and provides reclaimed water to the Northern California Power Agency (NCPA) and San Joaquin County (SJCo) Vector Control District. The Discharger submitted a Report of Waste Discharge (ROWD) in February 2012, and applied for a NPDES permit renewal to continue the authorization to discharge up to 8.5 mgd (average dry weather flow) of treated wastewater to Dredger Cut from the Facility, and also requested the issuance of separate permits to regulate the land and surface water discharges. The application was deemed complete on 9 October 2012.

Due to the complexities of the discharges to land for this Facility, separate permits have been issued for the surface water and land discharges. Order R5-2007-0113 was amended by Order R5-2013-XXXX on X October 2013 to remove all NPDES permitting requirements and now only regulates the discharges to land and reclaimed water uses. This Order is a NPDES Permit and only regulates the discharges to Dredger Cut.

For the purposes of this Order, references to the “discharger” or “permittee” in applicable federal and state laws, regulations, plans, or policy are held to be equivalent to references to the Discharger herein.

B. Facility Description. The Discharger owns and operates a municipal wastewater collection system and an industrial wastewater collection system. The Facility's wastewater treatment system consists of a head works with influent screens, mechanical grit removal, primary sedimentation, conventional activated sludge with nitrification and denitrification, secondary sedimentation, tertiary treatment using cloth media filtration, and ultraviolet light pathogen deactivation (UV Disinfection).

Surface Water Discharges. In general, during the months of September through June, the municipal wastewater is treated to tertiary standards and disinfected (UV Disinfection) prior to discharge to Dredger Cut, a water of the United States, and part of the Sacramento-San Joaquin Delta. This Order regulates the effluent discharge to Dredger Cut.

Land Discharges. Discharges to land and reclamation uses are regulated by separate Waste Discharge Requirements Order R5-2007-0113-01. Typically during the summer months (mid-June through early-September), secondary treated undisinfected municipal wastewater is pumped to the Facility's 40-acres of unlined storage ponds, and is used to irrigate the Discharger's agricultural fields. The Discharger's agricultural fields cover approximately 790 acres adjacent to the Facility and are used for fodder, fiber, or feed crops that are not directly used for human consumption (hereinafter The Agricultural Fields). Throughout the year, the Discharger also supplies tertiary treated municipal wastewater (Recycled Water) to the Northern California Power Agency (NCPA) and San Joaquin County (SJCo) Vector Control District. Approximately 1.0 – 1.5 mgd of Recycled Water is used as cooling water makeup for NCPA. The SJCo Vector Control District uses approximately 45 million gallons per year of Recycled Water for its mosquito fish rearing ponds.

Biosolids are thickened with a dissolved air floatation (DAF) thickener and are treated by anaerobic digestion and stored in the Facility's lined sludge stabilization pond. The stabilized solids are dewatered by rotary press. The dewatered solids are applied to the agricultural fields and regulated by separate Waste Discharge Requirements Order R5-2007-0113-01.

C. Legal Authorities. This Order is issued pursuant to section 402 of the Clean Water Act (CWA) and implementing regulations adopted by USEPA and chapter 5.5, division 7 of the California Water Code (Water Code; commencing with section 13370). It shall serve as a NPDES permit for point source discharges from this facility to surface waters. This Order also serves as Waste Discharge Requirements (WDRs) pursuant to article 4, chapter 4, division 7 of the Water Code (commencing with section 13260).

D. Background and Rationale for Requirements. The Central Valley Water Board developed the requirements in this Order based on information submitted as part of the application, through monitoring and reporting programs, and other available information. The Fact Sheet (Attachment F), which contains background information and rationale for Order requirements, is hereby incorporated into this Order and constitutes part of the Findings for this Order. Attachments A through I are also incorporated into this Order.

E. California Environmental Quality Act (CEQA). Under Water Code section 13389, this action to adopt an NPDES permit is exempt from the provisions of CEQA, Public Resources Code sections 21100-21177.

F. Technology-based Effluent Limitations. Section 301(b) of the CWA and implementing USEPA permit regulations at section 122.44, title 40 of the Code of Federal Regulations (40 CFR 122.44), require that permits include conditions meeting applicable technology-based requirements at a minimum, and any more stringent effluent limitations necessary to meet applicable water quality standards. The discharge authorized by this Order must meet minimum federal technology-based requirements based on Secondary Treatment Standards at 40 CFR Part 133. A detailed discussion of the technology-based effluent limitations development is included in the Fact Sheet.

G. Water Quality-based Effluent Limitations (WQBELs). Section 301(b) of the CWA and 40 CFR 122.44(d) require that permits include limitations more stringent than applicable federal technology-based requirements where necessary to achieve applicable water quality standards. This Order contains requirements, expressed as technology equivalence requirements, which are necessary to achieve water quality standards. The Central Valley Water Board has considered the factors listed in Water Code section 13241 in establishing these requirements. The rationale for these requirements, which consist of tertiary treatment or equivalent requirements, is discussed in the Fact Sheet.

40 CFR 122.44(d)(1)(i) mandates that permits include effluent limitations for all pollutants that are or may be discharged at levels that have the reasonable potential to cause or contribute to an exceedance of a water quality standard, including numeric and narrative objectives within a standard. Where reasonable potential has been established for a pollutant, but there is no numeric criterion or objective for the pollutant, WQBELs must be established using: (1) USEPA criteria guidance under CWA section 304(a), supplemented where necessary by other relevant information; (2) an indicator parameter for the pollutant of concern; or (3) a calculated numeric water quality criterion, such as a proposed state criterion or policy interpreting the state's narrative criterion, supplemented with other relevant information, as provided in 40 CFR 122.44(d)(1)(vi).

H. Water Quality Control Plans. The Central Valley Water Board adopted a *Water Quality Control Plan*, *Fourth Edition (Revised September 2009),* for the Sacramento and San Joaquin River Basins (hereinafter Basin Plan) on 22 April 2010 that designates beneficial uses in Section II, establishes water quality objectives, and contains implementation programs and policies to achieve those objectives for all waters addressed through the plan. Table II-1 of the Basin Plan identifies the beneficial uses of certain specific water bodies. The Sacramento-San Joaquin Delta is listed in Table II-1. In addition, the Basin Plan implements State Water Resources Control Board (State Water Board) Resolution No. 88-63, which established state policy that all waters, with certain exceptions, should be considered suitable or potentially suitable for municipal or domestic supply. Beneficial uses applicable to Dredger Cut and Sacramento-San Joaquin Delta are as follows:

Table 5. Basin Plan Beneficial Uses

Discharge Point	Receiving Water Name	Beneficial Use(s)
001	**Sacramento-San Joaquin Delta**	<u>Existing uses from Table II-1 of the Basin Plan:</u> Municipal and domestic supply (MUN); Agricultural supply, including irrigation and stock watering (AGR); Industrial process supply (PROC); Industrial service supply (IND); Water contact recreation, including canoeing and rafting (REC-1); Non-contact water recreation (REC-2); Warm freshwater habitat (WARM); cold freshwater habitat (COLD); Migration of aquatic organisms, warm and cold (MIGR); Spawning, reproduction, and/or early development, warm and cold (SPWN); Wildlife habitat (WILD); and Navigation (NAV); and Commercial and sport fishing (COMM). <u>Potential uses from Table II-1 of the Basin Plan:</u> None <u>Intermittent uses from Section II of the Basin Plan:</u> None

The Basin Plan includes a list of Water Quality Limited Segments (WQLSs), which are defined as "…*those sections of lakes, streams, rivers or other fresh water bodies where water quality does not meet (or is not expected to meet) water quality standards even after the application of appropriate limitations for point sources (40 CFR 130, et seq.)*." The Basin Plan also states, "*Additional treatment beyond minimum federal standards will be imposed on dischargers to WQLSs. Dischargers will be assigned or allocated a maximum allowable load of critical pollutants so that water quality objectives can be met in the segment*." Sacramento-San Joaquin Delta is listed as a WQLS for chlorpyrifos, dichlorodiphenyltrichloroethane (DDT), diazinon, Group A pesticides, invasive species, mercury and unknown toxicity in the 303(d) list of impaired water bodies. Effluent limitations for these constituents are included in this Order**.**

The State Water Board adopted the *Water Quality Control Plan for Control of Temperature in the Coastal and Interstate Water and Enclosed Bays and Estuaries of California* (Thermal Plan) on 18 May 1972, and amended this plan on 18 September 1975. This plan contains temperature objectives for surface waters. Requirements of this Order implement the Thermal Plan.

The *Water Quality Control Plan for the San Francisco Bay/Sacramento-San Joaquin Delta Estuary* (Bay-Delta Plan) was adopted in May 1995 by the State Water Board superseding the 1991 Bay-Delta Plan. The State Water Board is in the process of a phased review and update of the Bay-Delta Plan. The Bay-Delta Plan identifies the beneficial uses of the estuary and includes objectives for flow, salinity, and endangered species protection.

The State Water Board adopted Decision 1641 (D-1641) on 29 December 1999 and revised on 15 March 2000. D-1641 implements flow objectives for the Bay-

Delta Estuary, approves a petition to change points of diversion of the Central Valley Project and the State Water Project in the Southern Delta, and approves a petition to change places of use and purposes of use of the Central Valley Project. The water quality objectives of the Bay-Delta Plan are implemented as part of this Order. Requirements of this Order specifically implement the applicable Water Quality Control Plans**.**

I. **National Toxics Rule (NTR) and California Toxics Rule (CTR).** USEPA adopted the NTR on 22 December 1992, and later amended it on 4 May 1995 and 9 November 1999. About 40 criteria in the NTR applied in California. On 18 May 2000, USEPA adopted the CTR. The CTR promulgated new toxics criteria for California and, in addition, incorporated the previously adopted NTR criteria that were applicable in the state. The CTR was amended on 13 February 2001. These rules contain water quality criteria for priority pollutants.

J. **State Implementation Policy.** On 2 March 2000, the State Water Board adopted the *Policy for Implementation of Toxics Standards for Inland Surface Waters, Enclosed Bays, and Estuaries of California* (State Implementation Policy or SIP). The SIP became effective on 28 April 2000 with respect to the priority pollutant criteria promulgated for California by USEPA through the NTR and to the priority pollutant objectives established by the Central Valley Water Board in the Basin Plan. The SIP became effective on 18 May 2000 with respect to the priority pollutant criteria promulgated by USEPA through the CTR. The State Water Board adopted amendments to the SIP on 24 February 2005 that became effective on 13 July 2005. The SIP establishes implementation provisions for priority pollutant criteria and objectives and provisions for chronic toxicity control. Requirements of this Order implement the SIP.

K. **Compliance Schedules and Interim Requirements.** In general, an NPDES permit must include final effluent limitations that are consistent with CWA section 301 and with 40 CFR 122.44(d). There are exceptions to this general rule. The State Water Board's *Policy for Compliance Schedules in National Pollutant Discharge Elimination System Permits* (Compliance Schedule Policy) allows compliance schedules for new, revised, or newly interpreted water quality objectives or criteria, or in accordance with a TMDL. All compliance schedules must be as short as possible, and may not exceed ten years from the effective date of the adoption, revision, or new interpretation of the applicable water quality objective or criterion, unless a TMDL allows a longer schedule. A Central Valley Water Board, however, is not required to include a compliance schedule, but may issue a Time Schedule Order pursuant to Water Code section 13300 or a Cease and Desist Order pursuant to Water Code section 13301 where it finds that the discharger is violating or threatening to violate the permit. The Central Valley Water Board will consider the merits of each case in determining whether it is appropriate to include a compliance schedule in a permit, and, consistent with the Compliance Schedule Policy, should consider feasibility of achieving compliance, and must impose a schedule that is as short as possible to achieve compliance with the effluent limit based on the objective or criteria.

Where a compliance schedule for a final effluent limitation exceeds one year, the Order must include interim numeric limitations for that constituent or parameter, interim milestones and compliance reporting within 14 days after each interim milestone. The permit may also include interim requirements to control the pollutant, such as pollutant minimization and source control measures. This Order does include compliance schedules and interim effluent limitations. A detailed discussion of the basis for the compliance schedules and interim effluent limitation(s) is included in the Fact Sheet.

L. Stringency of Requirements for Individual Pollutants. This Order contains both technology-based effluent limitations and WQBELs for individual pollutants. The technology-based effluent limitations consist of restrictions on of 5-day biochemical oxygen demand (BOD_5), total suspended solids (TSS), and pH. The WQBELs consist of restrictions on pathogens, turbidity, ammonia, nitrate, nitrite, electrical conductivity, chronic and acute toxicity. This Order's technology-based pollutant restrictions implement the minimum, applicable federal technology-based requirements.

WQBELs have been scientifically derived to implement water quality objectives that protect beneficial uses. Both the beneficial uses and the water quality objectives have been approved pursuant to federal law and are the applicable federal water quality standards. To the extent that toxic pollutant WQBELs were derived from the CTR, the CTR is the applicable standard pursuant to 40 CFR 131.38. The scientific procedures for calculating the individual WQBELs for priority pollutants are based on the CTR-SIP, which was approved by USEPA on 18 May 2000. All beneficial uses and water quality objectives contained in the Basin Plan were approved under state law and submitted to and approved by USEPA prior to 30 May 2000. Any water quality objectives and beneficial uses submitted to USEPA prior to 30 May 2000, but not approved by USEPA before that date, are nonetheless "*applicable water quality standards for purposes of the [Clean Water] Act*" pursuant to 40 CFR 131.21(c)(1). Collectively, this Order's restrictions on individual pollutants are no more stringent than required to implement the technology-based requirements of the CWA and the applicable water quality standards for purposes of the CWA.

M. Antidegradation Policy. 40 CFR 131.12 requires that the state water quality standards include an antidegradation policy consistent with the federal policy. The State Water Board established California's antidegradation policy in State Water Board Resolution No. 68-16. Resolution No. 68-16 incorporates the federal antidegradation policy where the federal policy applies under federal law. Resolution No. 68-16 requires that existing quality of waters be maintained unless degradation is justified based on specific findings. The Central Valley Water Board's Basin Plan implements, and incorporates by reference, both the state and federal antidegradation policies. As discussed in detail in the Fact Sheet, the permitted discharge is consistent with the antidegradation provision of 40 CFR 131.12 and Resolution No. 68-16.

N. Anti-Backsliding Requirements. Sections 303(d)(4) and 402(o)(2) of the CWA and federal regulations at 40 CFR 122.44(l) prohibit backsliding in NPDES permits.

These anti-backsliding provisions require effluent limitations in some effluent limitations in this Order are less stringent that those in Order No. R5-2007-0113. As discussed in detail in the Fact Sheet, this relaxation of effluent limitations is consistent with the anti-backsliding requirements of the CWA and federal regulations.

O. Endangered Species Act. This Order does not authorize any act that results in the taking of a threatened or endangered species or any act that is now prohibited, or becomes prohibited in the future, under either the California Endangered Species Act (Fish and Game Code sections 2050 to 2097) or the Federal Endangered Species Act (16 U.S.C.A. sections 1531 to 1544). This Order requires compliance with effluent limits, receiving water limits, and other requirements to protect the beneficial uses of waters of the state. The discharger is responsible for meeting all requirements of the applicable Endangered Species Act.

P. Monitoring and Reporting. 40 CFR 122.48 requires that all NPDES permits specify requirements for recording and reporting monitoring results. Water Code sections 13267 and 13383 authorize the Central Valley Water Board to require technical and monitoring reports. The Monitoring and Reporting Program establishes monitoring and reporting requirements to implement federal and State requirements. The Monitoring and Reporting Program for the surface water discharge is provided in Attachment E.

The technical and monitoring reports in this Order are required in accordance with Water Code section 13267, which states the following in subsection (b)(1), "*In conducting an investigation specified in subdivision (a), the regional board may require that any person who has discharged, discharges, or is suspected of having discharged or discharging, or who proposes to discharge waste within its region, or any citizen or domiciliary, or political agency or entity of this state who has discharged, discharges, or is suspected of having discharged or discharging, or who proposes to discharge, waste outside of its region that could affect the quality of waters within its region shall furnish, under penalty of perjury, technical or monitoring program reports which the regional board requires. The burden, including costs, of these reports shall bear a reasonable relationship to the need for the report and the benefits to be obtained from the reports. In requiring those reports, the regional board shall provide the person with a written explanation with regard to the need for the reports, and shall identify the evidence that supports requiring that person to provide the reports.*"

The Discharger owns and operates the Facility subject to this Order. The monitoring reports required by this Order are necessary to determine compliance with this Order. The need for the monitoring reports is discussed in the Fact Sheet.

Q. Standard and Special Provisions. Standard Provisions, which apply to all NPDES permits in accordance with 40 CFR 122.41, and additional conditions applicable to specified categories of permits in accordance with 40 CFR 122.42, are provided in Attachment D. The discharger must comply with all standard provisions and with those additional conditions that are applicable under

40 CFR 122.42. The Central Valley Water Board has also included in this Order special provisions applicable to the Discharger. Some special provisions require submittal of technical reports. All technical reports are required in accordance with Water Code section 13267. The rationale for the special provisions and need for technical reports required in this Order is provided in the Fact Sheet.

R. In compliance with Water Code section 106.3, it is the policy of the State of California that every human being has the right to safe, clean, affordable, and accessible water adequate for human consumption, cooking, and sanitary purposes. This order promotes that policy by requiring discharges to meet maximum contaminant levels designed to protect human health and ensure that water is safe for domestic use.

S. Notification of Interested Parties. The Central Valley Water Board has notified the Discharger and interested agencies and persons of its intent to prescribe WDRs for the discharge and has provided them with an opportunity to submit their written comments and recommendations. Details of notification are provided in the Fact Sheet of this Order.

T. Consideration of Public Comment. The Central Valley Water Board, in a public meeting, heard and considered all comments pertaining to the discharge. Details of the Public Hearing are provided in the Fact Sheet.

THEREFORE, IT IS HEREBY ORDERED, in order to meet the provisions contained in division 7 of the Water Code (commencing with section 13000) and regulations adopted thereunder, and the provisions of the federal CWA and regulations and guidelines adopted thereunder, the Discharger shall comply with the requirements in this Order.

III. DISCHARGE PROHIBITIONS

A. Discharge of treated wastewater at a location or in a manner different from that described in the Findings is prohibited.

B. The by-pass or overflow of wastes to surface waters is prohibited, except as allowed by Federal Standard Provisions I.G. and I.H. (Attachment D).

C. Neither the discharge nor its treatment shall create a nuisance as defined in section 13050 of the Water Code.

IV. EFFLUENT LIMITATIONS AND DISCHARGE SPECIFICATIONS

A. Effluent Limitations – Discharge Point No. 001

1. Final Effluent Limitations – Discharge Point No. 001

a. The Discharger shall maintain compliance with the following effluent limitations at Discharge Point No. 001 at Dredger Cut, with compliance measured at Monitoring Location EFF-001 as described in the Monitoring and Reporting Program:

Table 6. Effluent Limitations

Parameter	Units	Effluent Limitations				
		Average Monthly	Average Weekly	Maximum Daily	Instantaneous Minimum	Instantaneous Maximum
Biochemical Oxygen Demand (BOD) (5-day @ 20°C)	mg/L	10	15	20	--	--
	lbs/day[1]	709	1064	1418	--	--
Total Suspended Solids	mg/L	10	15	20	--	--
	lbs/day[1]	709	1064	1418	--	--
Ammonia (as N)	mg/L	1.3	--	4.3	--	--
	lbs/day	92.2	--	305	--	--
Nitrate + Nitrite (as N)	mg/L	10	--	--	--	--
pH	Standard Units	--	--	--	6.5	8.5

1. Based on a permitted average dry weather flow of 8.5 mgd.

b. Percent Removal. The average monthly percent removal of 5-day biochemical oxygen demand (BOD_5) and total suspended solids (TSS) shall not be less than 85 percent.

c. Acute Whole Effluent Toxicity. Survival of aquatic organisms in 96-hour bioassays of undiluted waste shall be no less than:

i. 70%, minimum for any one bioassay; and
ii. 90%, median for any three consecutive bioassays.

d. Chronic Whole Effluent Toxicity. There shall be no chronic toxicity in the effluent discharge.

e. Total Coliform Organisms. Effluent total coliform organisms shall not exceed:

i. 2.2 most probable number (MPN) per 100 mL, as a 7-day median;
ii. 23 MPN/100 mL, more than once in any 30-day period; and
iii. 240 MPN/10 mL, at any time.

f. Average Dry Weather Flow. The average dry weather discharge flow shall not exceed 8.5 mgd.

g. Methylmercury. The effluent calendar annual methylmercury load shall not exceed 0.94 grams/year.

h. Chlorpyrifos and Diazinon. Effluent chlorpyrifos and diazinon concentrations shall not exceed the sum of one as defined below:

i. Average Monthly Effluent Limit

$$S_{AMEL} = \frac{C_{D\text{-}avg}}{0.08} + \frac{C_{C\text{-}avg}}{0.012} \leq 1.0$$

$C_{D\text{-}avg}$ = average monthly diazinon effluent concentration in µg/L
$C_{C\text{-}avg}$ = average monthly chlorpyrifos effluent concentration in µg/L

ii. Maximum Daily Effluent Limit

$$S_{MDEL} = \frac{C_{D\text{-}max}}{0.16} + \frac{C_{C\text{-}max}}{0.025} \leq 1.0$$

$C_{D\text{-}max}$ = maximum daily diazinon effluent concentration in µg/L
$C_{C\text{-}max}$ = maximum daily chlorpyrifos effluent concentration in µg/L

i. Electrical Conductivity. The calendar annual average electrical conductivity shall not exceed 727 µhmos/cm.

2. Interim Effluent Limitations

a. **Mercury, Total. Effective immediately, and until 31 December 2030**, the effluent calendar annual total mercury mass discharge shall not exceed 23 grams. These interim effluent limitations shall apply in lieu of the final effluent limits for methylmercury (Section IV.A.1.h).

B. Land Discharge Specifications (Not Applicable)

C. Reclamation Specifications (Not Applicable)

V. RECEIVING WATER LIMITATIONS

A. Surface Water Limitations

Receiving water limitations are based on water quality objectives contained in the Basin Plan and are a required part of this Order. The discharge shall not cause the following in the receiving water:

1. **Bacteria.** The fecal coliform concentration, based on a minimum of not less than five samples for any 30-day period, to exceed a geometric mean of 200 MPN/100 mL, nor more than 10 percent of the total number of fecal coliform samples taken during any 30-day period to exceed 400 MPN/100 mL.

2. **Biostimulatory Substances.** Water to contain biostimulatory substances which promote aquatic growths in concentrations that cause nuisance or adversely affect beneficial uses.

3. **Chemical Constituents.** Chemical constituents to be present in concentrations that adversely affect beneficial uses.

4. **Color.** Discoloration that causes nuisance or adversely affects beneficial uses.

5. **Dissolved Oxygen.** The dissolved oxygen concentration to be reduced below 5 mg/L at any time.

6. **Floating Material.** Floating material to be present in amounts that cause nuisance or adversely affect beneficial uses.

7. **Oil and Grease.** Oils, greases, waxes, or other materials to be present in concentrations that cause nuisance, result in a visible film or coating on the surface of the water or on objects in the water, or otherwise adversely affect beneficial uses.

8. **pH.** The pH to be depressed below 6.5 nor raised above 8.5**.**

9. **Pesticides:**

a. Pesticides to be present, individually or in combination, in concentrations that adversely affect beneficial uses;

b. Pesticides to be present in bottom sediments or aquatic life in concentrations that adversely affect beneficial uses;

c. Total identifiable persistent chlorinated hydrocarbon pesticides to be present in the water column at concentrations detectable within the accuracy of analytical methods approved by USEPA or the Executive Officer;

d. Pesticide concentrations to exceed the lowest levels technically and economically achievable;

e. Pesticides to be present in concentration in excess of the maximum contaminant levels set forth in CCR, Title 22, division 4, chapter 15; nor

f. Thiobencarb to be present in excess of 1.0 µg/L.

10. Radioactivity:

a. Radionuclides to be present in concentrations that are harmful to human, plant, animal, or aquatic life nor that result in the accumulation of radionuclides in the food web to an extent that presents a hazard to human, plant, animal, or aquatic life.

b. Radionuclides to be present in excess of the maximum contaminant levels (MCLs) specified in Table 64442 of section 64442 and Table 64443 of section 64443 of Title 22 of the California Code of Regulations.

12. Suspended Sediments. The suspended sediment load and suspended sediment discharge rate of surface waters to be altered in such a manner as to cause nuisance or adversely affect beneficial uses.

13. Settleable Substances. Substances to be present in concentrations that result in the deposition of material that causes nuisance or adversely affects beneficial uses.

14. Suspended Material. Suspended material to be present in concentrations that cause nuisance or adversely affect beneficial uses.

15. Taste and Odors. Taste- or odor-producing substances to be present in concentrations that impart undesirable tastes or odors to fish flesh or other edible products of aquatic origin, or that cause nuisance, or otherwise adversely affect beneficial uses.

16. Temperature.

a. An instantaneous temperature measured at RSW-001 of :

i. 86°F for the period of May through October; or

ii. 80°F for the month of April; or

iii. 75°F for the months of March and November; or

iv. 68°F for the period of December through February.

17. Toxicity. Toxic substances to be present, individually or in combination, in concentrations that produce detrimental physiological responses in human, plant, animal, or aquatic life.

18. Turbidity.

a. Shall not exceed 2 Nephelometric Turbidity Units (NTU) where natural turbidity is less than 1 NTU;

b. Shall not increase more than 1 NTU where natural turbidity is between 1 and 5 NTUs;

c. Shall not increase more than 20 percent where natural turbidity is between 5 and 50 NTUs;

d. Shall not increase more than 10 NTU where natural turbidity is between 50 and 100 NTUs; nor

e. Shall not increase more than 10 percent where natural turbidity is greater than 100 NTUs.

B. Groundwater Limitations (Not Applicable)

VI. PROVISIONS

A. Standard Provisions

1. The Discharger shall comply with all Standard Provisions (federal NPDES standard conditions from 40 CFR Part 122) included in Attachment D of this Order.

2. The Discharger shall comply with the following provisions:

a. If the Discharger's wastewater treatment plant is publicly owned or subject to regulation by California Public Utilities Commission, it shall be supervised and operated by persons possessing certificates of appropriate grade according to Title 23, CCR, division 3, chapter 26.

b. After notice and opportunity for a hearing, this Order may be terminated or modified for cause, including, but not limited to:

i. violation of any term or condition contained in this Order;

ii. obtaining this Order by misrepresentation or by failing to disclose fully all relevant facts;

iii. a change in any condition that requires either a temporary or permanent reduction or elimination of the authorized discharge; and

iv. a material change in the character, location, or volume of discharge.

The causes for modification include:

- *New regulations.* New regulations have been promulgated under section 405(d) of the CWA, or the standards or regulations on which the permit was based have been changed by promulgation of amended standards or regulations or by judicial decision after the permit was issued.

- *Land application plans.* When required by a permit condition to incorporate a land application plan for beneficial reuse of sewage sludge, to revise an existing land application plan, or to add a land application plan.

- *Change in sludge use or disposal practice.* Under 40 CFR 122.62(a)(1), a change in the Discharger's sludge use or disposal practice is a cause for modification of the permit. It is cause for revocation and reissuance if the Discharger requests or agrees.

The Central Valley Water Board may review and revise this Order at any time upon application of any affected person or the Central Valley Water Board's own motion.

c. If a toxic effluent standard or prohibition (including any scheduled compliance specified in such effluent standard or prohibition) is established under section

307(a) of the CWA, or amendments thereto, for a toxic pollutant that is present in the discharge authorized herein, and such standard or prohibition is more stringent than any limitation upon such pollutant in this Order, the Central Valley Water Board will revise or modify this Order in accordance with such toxic effluent standard or prohibition.

The Discharger shall comply with effluent standards and prohibitions within the time provided in the regulations that establish those standards or prohibitions, even if this Order has not yet been modified.

d. This Order shall be modified, or alternately revoked and reissued, to comply with any applicable effluent standard or limitation issued or approved under sections 301(b)(2)(C) and (D), 304(b)(2), and 307(a)(2) of the CWA, if the effluent standard or limitation so issued or approved:

i. Contains different conditions or is otherwise more stringent than any effluent limitation in the Order; or

ii. Controls any pollutant limited in the Order.

The Order, as modified or reissued under this paragraph, shall also contain any other requirements of the CWA then applicable.

e. The provisions of this Order are severable. If any provision of this Order is found invalid, the remainder of this Order shall not be affected.

f. The Discharger shall take all reasonable steps to minimize any adverse effects to waters of the State or users of those waters resulting from any discharge or sludge use or disposal in violation of this Order. Reasonable steps shall include such accelerated or additional monitoring as necessary to determine the nature and impact of the non-complying discharge or sludge use or disposal, and adequate public notification to downstream water agencies or others who might contact the non-complying discharge.

g. The Discharger shall ensure compliance with any existing or future pretreatment standard promulgated by USEPA under section 307 of the CWA, or amendment thereto, for any discharge to the municipal system.

h. A copy of this Order shall be maintained at the discharge facility and be available at all times to operating personnel. Key operating personnel shall be familiar with its content.

i. Safeguard to electric power failure:

i. The Discharger shall provide safeguards to assure that, should there be reduction, loss, or failure of electric power, the discharge shall comply with the terms and conditions of this Order.

ii. Upon written request by the Central Valley Water Board, the Discharger shall submit a written description of safeguards. Such safeguards may include alternate power sources, standby generators, retention capacity, operating procedures, or other means. A description of the safeguards provided shall include an analysis of the frequency, duration, and impact of power failures experienced over the past 5 years on effluent quality and on the capability of the Discharger to comply with the terms and conditions of the Order. The adequacy of the safeguards is subject to the approval of the Central Valley Water Board.

iii. Should the treatment works not include safeguards against reduction, loss, or failure of electric power, or should the Central Valley Water Board not approve the existing safeguards, the Discharger shall, within 90 days of having been advised in writing by the Central Valley Water Board that the existing safeguards are inadequate, provide to the Central Valley Water Board and USEPA a schedule of compliance for providing safeguards such that in the event of reduction, loss, or failure of electric power, the Discharger shall comply with the terms and conditions of this Order. The schedule of compliance shall, upon approval of the Central Valley Water Board, become a condition of this Order.

j. The Discharger, upon written request of the Central Valley Water Board, shall file with the Board a technical report on its preventive (failsafe) and contingency (cleanup) plans for controlling accidental discharges, and for minimizing the effect of such events. This report may be combined with that required under the Central Valley Water Board Standard Provision contained in section VI.A.2.i of this Order.

The technical report shall:

i. Identify the possible sources of spills, leaks, untreated waste by-pass, and contaminated drainage. Loading and storage areas, power outage, waste treatment unit outage, and failure of process equipment, tanks and pipes should be considered.

ii. Evaluate the effectiveness of present facilities and procedures and state when they became operational.

iii. Predict the effectiveness of the proposed facilities and procedures and provide an implementation schedule containing interim and final dates when they will be constructed, implemented, or operational.

The Central Valley Water Board, after review of the technical report, may establish conditions which it deems necessary to control accidental

discharges and to minimize the effects of such events. Such conditions shall be incorporated as part of this Order, upon notice to the Discharger.

k. A publicly owned treatment works whose waste flow has been increasing, or is projected to increase, shall estimate when flows will reach hydraulic and treatment capacities of its treatment and disposal facilities. The projections shall be made in January, based on the last 3 years' average dry weather flows, peak wet weather flows and total annual flows, as appropriate. When any projection shows that capacity of any part of the facilities may be exceeded in 4 years, the Discharger shall notify the Central Valley Water Board by 31 January. A copy of the notification shall be sent to appropriate local elected officials, local permitting agencies and the press. Within 120 days of the notification, the Discharger shall submit a technical report showing how it will prevent flow volumes from exceeding capacity or how it will increase capacity to handle the larger flows. The Central Valley Water Board may extend the time for submitting the report.

l. The Discharger shall submit technical reports as directed by the Executive Officer. All technical reports required herein that involve planning, investigation, evaluation, or design, or other work requiring interpretation and proper application of engineering or geologic sciences, shall be prepared by or under the direction of persons registered to practice in California pursuant to California Business and Professions Code, sections 6735, 7835, and 7835.1. To demonstrate compliance with Title 16, CCR, sections 415 and 3065, all technical reports must contain a statement of the qualifications of the responsible registered professional(s). As required by these laws, completed technical reports must bear the signature(s) and seal(s) of the registered professional(s) in a manner such that all work can be clearly attributed to the professional responsible for the work.

m. The Central Valley Water Board is authorized to enforce the terms of this permit under several provisions of the Water Code, including, but not limited to, sections 13385, 13386, and 13387.

n. For publicly owned treatment works, prior to making any change in the point of discharge, place of use, or purpose of use of treated wastewater that results in a permanent decrease of flow in any portion of a watercourse, the Discharger must file a petition with the State Water Board, Division of Water Rights, and receive approval for such a change. (Water Code section 1211).

o. In the event the Discharger does not comply or will be unable to comply for any reason, with any prohibition, maximum daily effluent limitation, 1-hour average effluent limitation, or receiving water limitation contained in this Order, the Discharger shall notify the Central Valley Water Board by telephone (916) 464-3291 within 24 hours of having knowledge of such noncompliance, and shall confirm this notification in writing within 5 days, unless the Central Valley Water Board waives confirmation. The written notification shall include the information required by the Standard Provision contained in Attachment D section V.E.1. [40 CFR 122.41(l)(6)(i)].

p. Failure to comply with provisions or requirements of this Order, or violation of other applicable laws or regulations governing discharges from this facility, may subject the Discharger to administrative or civil liabilities, criminal penalties, and/or other enforcement remedies to ensure compliance. Additionally, certain violations may subject the Discharger to civil or criminal enforcement from appropriate local, state, or federal law enforcement entities.

q. In the event of any change in control or ownership of land or waste discharge facilities presently owned or controlled by the Discharger, the Discharger shall notify the succeeding owner or operator of the existence of this Order by letter, a copy of which shall be immediately forwarded to the Central Valley Water Board.

To assume operation under this Order, the succeeding owner or operator must apply in writing to the Executive Officer requesting transfer of the Order. The request must contain the requesting entity's full legal name, the state of incorporation if a corporation, address and telephone number of the persons responsible for contact with the Central Valley Water Board and a statement. The statement shall comply with the signatory and certification requirements in the federal Standard Provisions (Attachment D, section V.B) and state that the new owner or operator assumes full responsibility for compliance with this Order. Failure to submit the request shall be considered a discharge without requirements, a violation of the Water Code. Transfer shall be approved or disapproved in writing by the Executive Officer.

B. Monitoring and Reporting Program Requirements

The Discharger shall comply with the Monitoring and Reporting Program, and future revisions thereto, in Attachment E of this Order.

C. Special Provisions

1. Reopener Provisions

a. Conditions that necessitate a major modification of a permit are described in 40 CFR 122.62, including, but not limited to:

i. If new or amended applicable water quality standards are promulgated or approved pursuant to section 303 of the CWA, or amendments thereto, this permit may be reopened and modified in accordance with the new or amended standards.

ii. When new information, that was not available at the time of permit issuance, would have justified different permit conditions at the time of issuance.

b. This Order may be reopened for modification, or revocation and reissuance, as a result of the detection of a reportable priority pollutant generated by special

conditions included in this Order. These special conditions may be, but are not limited to, fish tissue sampling, whole effluent toxicity, monitoring requirements on internal waste stream(s), and monitoring for surrogate parameters. Additional requirements may be included in this Order as a result of the special condition monitoring data.

c. **Mercury.** The Basin Plan's Delta Mercury Control Program was designed to proceed in two phases. After Phase 1, the Central Valley Water Board will conduct a Phase 1 Delta Mercury Control Program Review that considers: modification to the Delta Mercury Control Program. This Order may be reopened to address changes to the Delta Mercury Control Program.

d. **Pollution Prevention.** This Order requires the Discharger to prepare a pollution prevention plan following Water Code section 13263.3(d)(3) for mercury. Based on a review of the pollution prevention plans, this Order may be reopened for addition and/or modification of effluent limitations and requirements for these constituents.

e. **Whole Effluent Toxicity.** As a result of a Toxicity Reduction Evaluation (TRE), this Order may be reopened to include a numeric chronic toxicity limitation, a new acute toxicity limitation, and/or a limitation for a specific toxicant identified in the TRE. Additionally, if the State Water Board revises the SIP's toxicity control provisions that would require the establishment of numeric chronic toxicity effluent limitations, this Order may be reopened to include a numeric chronic toxicity effluent limitation based on the new provisions.

f. **Water Effects Ratios (WER) and Metal Translators.** A default WER of 1.0 has been used in this Order for calculating CTR criteria for applicable priority pollutant inorganic constituents. In addition, default dissolved-to-total metal translators have been used to convert water quality objectives from dissolved to total recoverable when developing effluent limitations for metals. If the Discharger performs studies to determine site-specific WERs and/or site-specific dissolved-to-total metal translators, this Order may be reopened to modify the effluent limitations for the applicable inorganic constituents.

g. **Regional Monitoring Program.** The Central Valley Water Board is developing a Regional Monitoring Program. This Order may be reopened to modify the monitoring requirements to implement the Regional Monitoring Program.

h. **Drinking Water Policy**. The Central Valley Water Board is developing a Drinking Water Policy. This Order may be reopened to incorporate monitoring of drinking water constituents to implement the Drinking Water Policy.

i. **Diazinon and Chlorpyrifos Basin Plan Amendment**. In the event the Central Valley Water Board modifies the Diazinon and Chlorpyrifos TMDL with regard to the implementation plan for NPDES-permitted domestic wastewater dischargers, this Order may be reopened to modify diazinon and chlorpyrifos effluent limitations, as appropriate, in accordance with an amendment to the Basin Plan.

2. Special Studies, Technical Reports and Additional Monitoring Requirements

a. Chronic Whole Effluent Toxicity. For compliance with the Basin Plan's narrative toxicity objective, this Order requires the Discharger to conduct chronic whole effluent toxicity (WET) testing, as specified in the Monitoring and Reporting Program (Attachment E, section V). Furthermore, this Provision requires the Discharger to investigate the causes of, and identify corrective actions to reduce or eliminate effluent toxicity. If the discharge exhibits toxicity, as described in subsection ii below, the Discharger is required to initiate a TRE in accordance with an approved TRE Workplan, and take actions to mitigate the impact of the discharge and prevent recurrence of toxicity. A TRE is a site-specific study conducted in a stepwise process to identify the source(s) of toxicity and the effective control measures for effluent toxicity. TREs are designed to identify the causative agents and sources of effluent toxicity, evaluate the effectiveness of the toxicity control options, and confirm the reduction in effluent toxicity. This Provision includes procedures for accelerated chronic toxicity monitoring and TRE initiation.

i. Accelerated Monitoring and TRE Initiation. When the numeric toxicity monitoring trigger is exceeded during regular chronic toxicity monitoring, the Discharger shall initiate accelerated monitoring as required in the Accelerated Monitoring Specifications. The Discharger shall initiate a TRE to address effluent toxicity if any WET testing results exceed the numeric toxicity monitoring trigger during accelerated monitoring.

ii. Numeric Toxicity Monitoring Trigger. The numeric toxicity monitoring trigger to initiate a TRE is > **1 TU_C** (where TU_C = 100/NOEC). The monitoring trigger is not an effluent limitation; it is the toxicity threshold at which the Discharger is required to begin accelerated monitoring and initiate a TRE when the effluent exhibits toxicity.

iii. Accelerated Monitoring Specifications. If the numeric toxicity monitoring trigger is exceeded during regular chronic toxicity testing, the Discharger shall initiate accelerated monitoring within 14 days of notification by the laboratory of the exceedance. Accelerated monitoring shall consist of four (4) chronic toxicity tests conducted once every 2 weeks using the species that exhibited toxicity. The following protocol shall be used for accelerated monitoring and TRE initiation:

(a) If the results of four (4) consecutive accelerated monitoring tests do not exceed the monitoring trigger, the Discharger may cease accelerated monitoring and resume regular chronic toxicity monitoring. However, notwithstanding the accelerated monitoring results, if there is evidence of effluent toxicity, the Executive Officer may require that the Discharger initiate a TRE.

(b) If the source(s) of the toxicity is easily identified (e.g., temporary plant upset), the Discharger shall make necessary corrections to the facility

and shall continue accelerated monitoring until four (4) consecutive accelerated tests do not exceed the monitoring trigger. Upon confirmation that the effluent toxicity has been removed, the Discharger may cease accelerated monitoring and resume regular chronic toxicity monitoring.

(c) If the result of any accelerated toxicity test exceeds the monitoring trigger, the Discharger shall cease accelerated monitoring and begin a TRE to investigate the cause(s) of, and identify corrective actions to reduce or eliminate effluent toxicity. Within thirty (30) days of notification by the laboratory of any test result exceeding the monitoring trigger during accelerated monitoring, the Discharger shall submit a TRE Action Plan to the Central Valley Water Board including, at minimum:

(1) Specific actions the Discharger will take to investigate and identify the cause(s) of toxicity, including a TRE WET monitoring schedule;

(2) Specific actions the Discharger will take to mitigate the impact of the discharge and prevent the recurrence of toxicity; and

(3) A schedule for these actions.

b. Phase 1 Methylmercury Control Study. In accordance with the Basin Plan's Delta Mercury Control Program and the compliance schedule included in this Order for methylmercury (Section VI.C.7.a), the Discharger shall participate in the Central Valley Clean Water Association (CVCWA) Coordinated Methylmercury Control Study (Study) to evaluate existing control methods and, as needed, develop additional control methods that could be implemented to achieve the methylmercury waste load allocation. A work plan was submitted by CVCWA on 20 April 2013. The study work plan will be reviewed by a Technical Advisory Committee (TAC) and approved by the Executive Officer. The work plan shall be implemented immediately after approval by the Executive Officer, and a progress report shall be submitted by **20 October 2015.**

The Study shall evaluate the feasibility of reducing sources more than the minimum amount needed to achieve the methylmercury allocation. The Study also may include an evaluation of innovative actions, watershed approaches, offsets projects, and other short and long-term actions that result in reducing inorganic (total) mercury and methylmercury to address the accumulation of methylmercury in fish tissue and to reduce methylmercury exposure. The Study may evaluate the effectiveness of using inorganic (total) mercury controls to control methylmercury discharges.

The Study shall include a description of methylmercury and/or inorganic (total) mercury management practices identified in Phase 1; an evaluation

of the effectiveness, costs, potential environmental effects, and overall feasibility of the control actions. The Study shall also include proposed implementation plans and schedules to comply with methylmercury allocations as soon as possible. The Study shall be submitted to the Central Valley Water Board by **20 October 2018.** As feasible implementation measures are determined, the Discharger shall take action to reduce methylmercury in the discharge.

The Executive Officer may, after public notice, extend the due date up to two years if the Discharger demonstrates it is making significant progress towards developing, implementing and/or completing the Study and reasonable attempts have been made to secure funding for the Study, but the Discharger has experienced severe budget shortfalls.

c. Update Temperature Study. Based on the United States Fish and Wildlife Service (USFWS) review of the August 2012, *Assessment of the Potential Effects of the Proposed Temperature Limits for the White Slough Water Pollution Control Facility Discharge on Delta Smelt,* USFWS staff recommends for the next permit cycled the Discharger gather additional data to meet three objectives; 1) characterize the background temperature regime of White Slough and Bishop Cut throughout a range of water years and spring climate conditions; 2) characterize the effect of the discharge on White Slough and Bishop Cut during January through June; and 3) predict the effect of any proposed thermal discharge conditions less restrictive than the Thermal Plan on White Slough and Bishop Cut. The Discharger shall monitor White Slough and Bishop Cut to meet the objectives described above and update the temperature assessment as necessary. The updated temperature assessment shall be completed in conformance with the following schedule:

Task	Compliance Date
i. Submit Workplan and Time Schedule (coordinated with USFWS)	1April 2014
ii. Begin Monitoring	According to the time schedule approved by USFWS
iii. Submit Updated Temperature Assessment	6 months following completion of final monthly monitoring

3. Best Management Practices and Pollution Prevention

a. Mercury Exposure Reduction Program. The Discharger shall participate in a mercury Exposure Reduction Program in accordance with the Basin Plan's Delta Mercury Control Program. The Discharger, either individually or collectively with other Delta dischargers, shall submit an exposure reduction

work plan for Executive Officer approval by **20 October 2013**. The objective of the Exposure Reduction Program is to reduce mercury exposure of Delta fish consumers most likely affected by mercury. The work plan shall address the Exposure Reduction Program objective, elements, and the Discharger's coordination with other stakeholders. The minimum requirements for the exposure reduction work plan are outlined in the Fact Sheet (Attachment F section VII.B.3.b). The Discharger shall integrate or, at minimum, provide good-faith opportunities for integration of community-based organizations, tribes, and consumers of Delta fish into planning, decision making, and implementation of exposure reduction activities. **The Discharger shall implement the work plan within six months of Executive Officer approval.**

b. Salinity Evaluation and Minimization Plan. The Discharger shall update and submit a salinity evaluation and minimization plan to identify and address sources of salinity from the Facility. The updated plan shall be submitted to the Central Valley Water Board **within 9 months of the adoption date of this Order** for the approval by the Executive Officer. If the existing Salinity Evaluation and Minimization Plan submitted by the Discharger on 31 October 2008 is adequate, a new Plan is not necessary. A letter indicating the existing is Plan is adequate is only necessary.

4. Construction, Operation and Maintenance Specifications

a. While discharging to Dredger Cut, the Discharger shall operate the UV disinfection system to provide disinfection equivalent to Title 22 disinfected tertiary recycled water, and shall meet the following requirements:

i. The Discharger shall provide continuous, reliable monitoring of flow, UV transmittance, UV power, and turbidity.

ii. UV Dose. A minimum hourly average UV dose per channel of 100 millijoules per square centimeter (mJ/cm^2) at peak daily flow shall be provided.

iii. Turbidity. The Discharger shall operate the treatment system to ensure that turbidity prior to disinfection shall not exceed 2 NTU as a daily average, and 5 NTU more than 5 percent of the time within a 24-hour period, and 10 NTU, at any time.

iv. UV Transmittance. The minimum hourly average UV transmittance (at 254 nanometers) shall not fall below the percentages below for the indicated range of flows through the UV disinfection system:

i. 67 percent for flows between 15.2 and 16.3 mgd;

ii. 66 percent for flows between 14.0 and 15.2 mgd;

iii. 65 percent for flows between 12.9 and 14.0 mgd;

iv. 64 percent for flows between 11.8 and 12.9 mgd; or

v. 63 percent for flows up to 11.8 mgd.

v. The quartz sleeves and cleaning system components must be visually inspected per the manufacturer's operations manual for physical wear (scoring, solarization, seal leaks, cleaning fluid levels, etc.) and to check the efficacy of the cleaning system.

vi. The lamp sleeves must be cleaned periodically as necessary to meet the requirements.

vii. Lamps must be replaced per the manufacturer's operations manual, or sooner, if there are indications the lamps are failing to provide adequate disinfection. Lamp age and lamp replacement records must be maintained.

viii. The Facility must be operated in accordance with an operations and maintenance program that assures adequate disinfection.

5. Special Provisions for Municipal Facilities (POTWs Only)

a. Pretreatment Requirements.

i. The Discharger shall be responsible and liable for the performance of all Control Authority pretreatment requirements contained in 40 CFR Part 403, including any subsequent regulatory revisions to 40 CFR Part 403. Where 40 CFR Part 403 or subsequent revision places mandatory actions upon the Discharger as Control Authority but does not specify a timetable for completion of the actions, the Discharger shall complete the required actions within 6 months from the issuance date of this permit or the effective date of the 40 CFR Part 403 revisions, whichever comes later. For violations of pretreatment requirements, the Discharger shall be subject to enforcement actions, penalties, fines, and other remedies by USEPA or other appropriate parties, as provided in the CWA. USEPA may initiate enforcement action against a nondomestic user for noncompliance with applicable standards and requirements as provided in the CWA.

ii. The Discharger shall enforce the requirements promulgated under sections 307(b), 307(c), 307(d), and 402(b) of the CWA with timely, appropriate and effective enforcement actions. The Discharger shall cause all nondomestic users subject to federal categorical standards to achieve compliance no later than the date specified in those requirements or, in the case of a new nondomestic user, upon commencement of the discharge.

iii. The Discharger shall perform the pretreatment functions as required in 40 CFR Part 403 including, but not limited to:

(a) Implement the necessary legal authorities as provided in 40 CFR 403.8(f)(1);

(b) Enforce the pretreatment requirements under 40 CFR 403.5 and 403.6;

(c) Implement the programmatic functions as provided in 40 CFR 403.8(f)(2); and

(d) Provide the requisite funding and personnel to implement the pretreatment program as provided in 40 CFR 403.8(f)(3).

iv. The Discharger shall implement, as more completely set forth in 40 CFR 403.5, the necessary legal authorities, programs, and controls to ensure that the following incompatible wastes are not introduced to the treatment system, where incompatible wastes are:

(a) Wastes which create a fire or explosion hazard in the treatment works;

(b) Wastes which will cause corrosive structural damage to treatment works, but in no case wastes with a pH lower than 5.0, unless the works is specially designed to accommodate such wastes;

(c) Solid or viscous wastes in amounts which cause obstruction to flow in sewers, or which cause other interference with proper operation or treatment works;

(d) Any waste, including oxygen demanding pollutants (BOD, etc.), released in such volume or strength as to cause inhibition or disruption in the treatment works, and subsequent treatment process upset and loss of treatment efficiency;

(e) Heat in amounts that inhibit or disrupt biological activity in the treatment works, or that raise influent temperatures above 40°C (104°F), unless the Central Valley Water Board approves alternate temperature limits;

(f) Petroleum oil, non-biodegradable cutting oil, or products of mineral oil origin in amounts that will cause interference or pass through;

(g) Pollutants which result in the presence of toxic gases, vapors, or fumes within the treatment works in a quantity that may cause acute worker health and safety problems; and:

(h) Any trucked or hauled pollutants, except at points predesignated by the Discharger.

v. *The Discharger shall implement, as more completely set forth in 40 CFR 403.5, the legal authorities, programs, and controls necessary to ensure that indirect discharges do not introduce pollutants into the sewerage system that, either alone or in conjunction with a discharge or discharges from other sources:*

(a) Flow through the system to the receiving water in quantities or concentrations that cause a violation of this Order, or:

(b) Inhibit or disrupt treatment processes, treatment system operations, or sludge processes, use, or disposal and either cause a violation of this Order or prevent sludge use or disposal in accordance with this Order.

b. Collection System. On 2 May 2006, the State Water Board adopted State Water Resources Control Board Order No. 2006-0003-DWQ, Statewide General Waste Discharge Requirements (WDRs) for Sanitary Sewer Systems. The Discharger shall be subject to the requirements of Order No. 2006-0003-DWQ and any future revisions thereto. Order No. 2006-0003-DWQ requires that all public agencies that currently own or operate sanitary sewer systems apply for coverage under the general WDRs. The Discharger has applied for and has been approved for coverage under Order 2006-0003-DWQ for operation of its wastewater collection system**.**

6. Other Special Provisions

a. When discharging to Dredger Cut, wastewater shall be oxidized, coagulated, filtered, and adequately disinfected pursuant to the Department of Public Health (DPH) reclamation criteria, CCR, Title 22, division 4, chapter 3, (Title 22), or equivalent.

7. Compliance Schedules

a. Compliance Schedules for Final Effluent Limitations for Methylmercury. This Order requires compliance with the final effluent limitations for methylmercury by **31 December 2030**. The Discharger shall comply with the following time schedule to ensure compliance with the final effluent limitations:

Task	Date Due
Phase 1	
i. Submit CVCWA Coordinated Methylmercury Control Study Work Plan	**Submitted**
ii. Update and Implement Pollution Prevention Plan (PPP)[1] for Mercury	**1 December 2013**
iii. Submit Mercury Exposure Reduction Work Plan	**20 October 2013**
iv. Implement CVCWA Coordinated Methylmercury Control Study Work Plan	**Immediately following Executive Officer Approval**
v. Implement Mercury Exposure Reduction Work Plan (per Section VI.C.3.a)	**6 months following Executive Officer Approval**
vi. Annual Progress Reports[2]	**1 October 2014** **1 October 2015** **1 October 2016** **1 October 2017**
vii. Submit CVCWA Coordinated Methylmercury Control Study Progress Report	**20 October 2015**
viii. Submit Final CVCWA Coordinated Methylmercury Control Study	**20 October 2018**[4]
Phase 2	
ix. Implement methylmercury control programs	**TBD**[3]
x. Full Compliance	**31 December 2030**[3]

Task	Date Due
[1] The PPP for Mercury shall be updated and implemented in accordance with Section VI.C.3.a. The Discharger shall continue to implement its existing PPP for mercury during the period in which it updates the PPP. If the existing PPP submitted by the Discharger in April 2012is adequate, a new PPP is not necessary. A letter indicating the existing is PPP is adequate is only necessary.	
[2] The progress reports shall detail what steps have been implemented towards achieving compliance with waste discharge requirements, including studies, construction progress, evaluation of measures implemented, sources of funding, and recommendations for additional measures as necessary to achieve full compliance by the final compliance date.	
[3] To be determined. Following Phase 1 the Central Valley Water Board will conduct a Phase 1 Delta Mercury Control Program Review that considers: modification of methylmercury goals, objectives, allocations and/or the final compliance date, etc. Consequently, the start of Phase 2 and the final compliance date is uncertain at the time this Order was adopted.	
[4] The Executive Officer may, after public notice, extend the due date for the Final CVCWA Coordinated Methylmercury Control Study up to two years if the Discharger demonstrates it is making significant progress towards developing, implementing and/or completing the Study and reasonable attempts have been made to secure funding for the Study, but the Discharger has experienced severe budget shortfalls.	

VII. COMPLIANCE DETERMINATION

A. BOD_5 and TSS Effluent Limitations (Section IV.A.1.a). Compliance with the final effluent limitations for BOD_5 and TSS required in Limitations and Discharge Requirements section **IV.A.1.a** shall be ascertained by 24-hour composite samples. Compliance with effluent limitations required in Limitations and Discharge Requirements section **IV.A.1.b** for percent removal shall be calculated using the arithmetic mean of BOD_5 and TSS in effluent samples collected over a monthly period as a percentage of the arithmetic mean of the values for influent samples collected at approximately the same times during the same period.

B. Total Mercury Mass Loading Interim Effluent Limitations (Section IV.A.2.a). The procedures for calculating mass loadings are as follows:

1. The total pollutant mass load for each individual calendar month shall be determined using an average of all concentration data collected that month and the corresponding total monthly flow. All effluent monitoring data collected under the monitoring and reporting program, pretreatment program, and any special studies shall be used for these calculations. The total annual mass loading shall be the sum of the individual calendar months.

2. In calculating compliance, the Discharger shall count all non-detect measures at one-half of the detection level. If compliance with the effluent limitation is not attained due to the non-detect contribution, the Discharger shall improve and implement available analytical capabilities and compliance shall be evaluated with consideration of the detection limits.

C. Average Dry Weather Flow Effluent Limitations (Section IV.A.1.g). The average dry weather discharge flow represents the daily average flow when groundwater is at or near normal and runoff is not occurring. Compliance with the average dry weather flow effluent limitations will be determined annually based on the average daily flow over three consecutive dry weather months (e.g., July, August, and September) as measured at INF-001.

D. Total Coliform Organisms Effluent Limitations (Section IV.A.1.f). For each day that an effluent sample is collected and analyzed for total coliform organisms, the 7-day median shall be determined by calculating the median concentration of total coliform bacteria in the effluent utilizing the bacteriological results of the last 7 days. For example, if a sample is collected on a Wednesday, the result from that sampling event and all results from the previous 6 days (i.e., Tuesday, Monday, Sunday, Saturday, Friday, and Thursday) are used to calculate the 7-day median. If the 7-day median of total coliform organisms exceeds a most probable number (MPN) of 2.2 per 100 milliliters, the Discharger will be considered out of compliance.

E. Mass Effluent Limitations. The mass effluent limitations contained in the Final Effluent Limitations IV.A.1.a. are based on the permitted average dry weather flow and calculated as follows:.

Mass (lbs/day) = Flow (MGD) x Concentration (mg/L) x 8.34 (conversion factor)

If the effluent flow exceeds the permitted average dry weather flow during wet-weather seasons, the effluent mass limitations contained in Final Effluent Limitations IV.A.1.a shall not apply. If the effluent flow is below the permitted average dry weather flow during wet-weather seasons, the effluent mass limitations do apply.

F. Chronic Whole Effluent Toxicity Effluent Limitation (Section IV.A.1.e), Compliance with the accelerated monitoring and TRE provisions of Provision VI.C.2.a shall constitute compliance with the effluent limitation.

G. Chlorpyrifos and Diazinon Effluent Limitations (Section IV.A.1.i). Compliance shall be determined by calculating the sum (S), as provided in this Order, with analytical results that are reported as “non-detectable” concentrations to be considered to be zero.

H. Priority Pollutant Effluent Limitations. Compliance with effluent limitations for priority pollutants shall be determined in accordance with Section 2.4.5 of the SIP, as follows:

1. Dischargers shall be deemed out of compliance with an effluent limitation, if the concentration of the priority pollutant in the monitoring sample is greater than the effluent limitation and greater than or equal to the reporting level (RL).

2. Dischargers shall be required to conduct a Pollutant Minimization Program (PMP) in accordance with section 2.4.5.1 of the SIP when there is evidence that the priority pollutant is present in the effluent above an effluent limitation and either:

a. A sample result is reported as detected, but not quantified (DNQ) and the effluent limitation is less than the RL; or

b. A sample result is reported as non-detect (ND) and the effluent limitation is less than the method detection limit (MDL).

3. When determining compliance with an average monthly effluent limitation (AMEL) and more than one sample result is available in a month, the discharger shall compute the arithmetic mean unless the data set contains one or more reported determinations of DNQ or ND. In those cases, the discharger shall compute the median in place of the arithmetic mean in accordance with the following procedure:

a. The data set shall be ranked from low to high, reported ND determinations lowest, DNQ determinations next, followed by quantified values (if any). The order of the individual ND or DNQ determinations is unimportant.

b. The median value of the data set shall be determined. If the data set has an odd number of data points, then the median is the middle value. If the data set has an even number of data points, then the median is the average of the two values around the middle unless one or both of the points are ND or DNQ, in which case the median value shall be the lower of the two data points where DNQ is lower than a value and ND is lower than DNQ.

4. If a sample result, or the arithmetic mean or median of multiple sample results, is below the RL, and there is evidence that the priority pollutant is present in the effluent above an effluent limitation and the discharger conducts a PMP (as described in section 2.4.5.1), the discharger shall <u>not</u> be deemed out of compliance.

ATTACHMENT A – DEFINITIONS

Arithmetic Mean (μ)
Also called the average, is the sum of measured values divided by the number of samples. For ambient water concentrations, the arithmetic mean is calculated as follows:

Arithmetic mean = $\mu = \Sigma x / n$ where: Σx is the sum of the measured ambient water concentrations, and n is the number of samples.

Average Monthly Effluent Limitation (AMEL)
The highest allowable average of daily discharges over a calendar month, calculated as the sum of all daily discharges measured during a calendar month divided by the number of daily discharges measured during that month.

Average Weekly Effluent Limitation (AWEL)
The highest allowable average of daily discharges over a calendar week (Sunday through Saturday), calculated as the sum of all daily discharges measured during a calendar week divided by the number of daily discharges measured during that week.

Best Practicable Treatment or Control (BPTC)
BPTC is a requirement of State Water Resources Control Board Resolution 68-16 – "Statement of Policy with Respect to Maintaining High Quality of Waters in California" (referred to as the "Antidegradation Policy"). BPTC is the treatment or control of a discharge necessary to assure that, "*(a) a pollution or nuisance will not occur and (b) the highest water quality consistent with maximum benefit to the people of the State will be maintained.*" Pollution is defined in CWC Section 13050(l). In general, an exceedance of a water quality objective in the Basin Plan constitutes "pollution".

Bioaccumulative
Those substances taken up by an organism from its surrounding medium through gill membranes, epithelial tissue, or from food and subsequently concentrated and retained in the body of the organism.

Biosolids
Sludge that has been treated and tested and shown to be capable of being beneficially and legally used pursuant to federal and state regulations as a soil amendment for agriculture, silviculture, horticulture, and land reclamation activities.

Carcinogenic
Pollutants are substances that are known to cause cancer in living organisms.

Coefficient of Variation (CV)
CV is a measure of the data variability and is calculated as the estimated standard deviation divided by the arithmetic mean of the observed values.

Daily Discharge
Daily Discharge is defined as either: (1) the total mass of the constituent discharged over the calendar day (12:00 am through 11:59 pm) or any 24-hour period that reasonably represents a calendar day for purposes of sampling (as specified in the permit), for a constituent with limitations expressed in units of mass or; (2) the unweighted arithmetic mean measurement of the constituent over the day for a constituent with limitations expressed in other units of measurement (e.g., concentration).

The daily discharge may be determined by the analytical results of a composite sample taken over the course of 1 day (a calendar day or other 24-hour period defined as a day) or by the arithmetic mean of analytical results from one or more grab samples taken over the course of the day.

For composite sampling, if 1 day is defined as a 24-hour period other than a calendar day, the analytical result for the 24-hour period will be considered as the result for the calendar day in which the 24-hour period ends.

Detected, but Not Quantified (DNQ)
DNQ are those sample results less than the RL, but greater than or equal to the laboratory's MDL.

Dilution Credit
Dilution Credit is the amount of dilution granted to a discharge in the calculation of a water quality-based effluent limitation, based on the allowance of a specified mixing zone. It is calculated from the dilution ratio or determined through conducting a mixing zone study or modeling of the discharge and receiving water.

Effluent Concentration Allowance (ECA)
ECA is a value derived from the water quality criterion/objective, dilution credit, and ambient background concentration that is used, in conjunction with the coefficient of variation for the effluent monitoring data, to calculate a long-term average (LTA) discharge concentration. The ECA has the same meaning as waste load allocation (WLA) as used in USEPA guidance (Technical Support Document For Water Quality-based Toxics Control, March 1991, second printing, EPA/505/2-90-001).

Enclosed Bays
Enclosed Bays means indentations along the coast that enclose an area of oceanic water within distinct headlands or harbor works. Enclosed bays include all bays where the narrowest distance between the headlands or outermost harbor works is less than 75 percent of the greatest dimension of the enclosed portion of the bay. Enclosed bays include, but are not limited to, Humboldt Bay, Bodega Harbor, Tomales Bay, Drake's Estero, San Francisco Bay, Morro Bay, Los Angeles-Long Beach Harbor, Upper and Lower Newport Bay, Mission Bay, and San Diego Bay. Enclosed bays do not include inland surface waters or ocean waters.

Estimated Chemical Concentration
The estimated chemical concentration that results from the confirmed detection of the substance by the analytical method below the ML value.

Estuaries
Estuaries means waters, including coastal lagoons, located at the mouths of streams that serve as areas of mixing for fresh and ocean waters. Coastal lagoons and mouths of streams that are temporarily separated from the ocean by sandbars shall be considered estuaries. Estuarine waters shall be considered to extend from a bay or the open ocean to a point upstream where there is no significant mixing of fresh water and seawater. Estuarine waters included, but are not limited to, the Sacramento-San Joaquin Delta, as defined in Water Code section 12220, Suisun Bay, Carquinez Strait downstream to the Carquinez Bridge, and appropriate areas of the Smith, Mad, Eel, Noyo, Russian, Klamath, San Diego, and Otay rivers. Estuaries do not include inland surface waters or ocean waters.

Inland Surface Waters
All surface waters of the State that do not include the ocean, enclosed bays, or estuaries.

Instantaneous Maximum Effluent Limitation
The highest allowable value for any single grab sample or aliquot (i.e., each grab sample or aliquot is independently compared to the instantaneous maximum limitation).

Instantaneous Minimum Effluent Limitation
The lowest allowable value for any single grab sample or aliquot (i.e., each grab sample or aliquot is independently compared to the instantaneous minimum limitation).

Maximum Daily Effluent Limitation (MDEL)
The highest allowable daily discharge of a pollutant, over a calendar day (or 24-hour period). For pollutants with limitations expressed in units of mass, the daily discharge is calculated as the total mass of the pollutant discharged over the day. For pollutants with limitations expressed in other units of measurement, the daily discharge is calculated as the arithmetic mean measurement of the pollutant over the day.

Median
The middle measurement in a set of data. The median of a set of data is found by first arranging the measurements in order of magnitude (either increasing or decreasing order). If the number of measurements (n) is odd, then the median = $X_{(n+1)/2}$. If n is even, then the median = $(X_{n/2} + X_{(n/2)+1})/2$ (i.e., the midpoint between the $n/2$ and $n/2+1$).

Method Detection Limit (MDL)
MDL is the minimum concentration of a substance that can be measured and reported with 99 percent confidence that the analyte concentration is greater than zero, as defined in 40 CFR Part 136, Attachment B, revised as of 3 July 1999.

Minimum Level (ML)
ML is the concentration at which the entire analytical system must give a recognizable signal and acceptable calibration point. The ML is the concentration in a sample that is equivalent to the concentration of the lowest calibration standard analyzed by a specific analytical procedure, assuming that all the method specified sample weights, volumes, and processing steps have been followed.

Mixing Zone
Mixing Zone is a limited volume of receiving water that is allocated for mixing with a wastewater discharge where water quality criteria can be exceeded without causing adverse effects to the overall water body.

NOEC, No Observed Effect Concentration
The highest tested concentration of an effluent or test sample whose effect is not different from the control effect, according to the statistical test used (see LOEC). The NOEC is usually the highest tested concentration of an effluent or toxic that causes no observable effects on the test organisms (i.e. the highest concentration of toxicity at which the values for the observed responses do not statistically differ from the controls).

Not Detected (ND)
Sample results which are less than the laboratory's MDL.

Ocean Waters
The territorial marine waters of the State as defined by California law to the extent these waters are outside of enclosed bays, estuaries, and coastal lagoons. Discharges to ocean waters are regulated in accordance with the State Water Board's California Ocean Plan.

Persistent Pollutants
Persistent pollutants are substances for which degradation or decomposition in the environment is nonexistent or very slow.

Pollutant Minimization Program (PMP)
PMP means waste minimization and pollution prevention actions that include, but are not limited to, product substitution, waste stream recycling, alternative waste management methods, and education of the public and businesses. The goal of the PMP shall be to reduce all potential sources of a priority pollutant(s) through pollutant minimization (control) strategies, including pollution prevention measures as appropriate, to maintain the effluent concentration at or below the water quality-based effluent limitation. Pollution prevention measures may be particularly appropriate for persistent bioaccumulative priority pollutants where there is evidence that beneficial uses are being impacted. The Central Valley Water Board may consider cost effectiveness when establishing the requirements of a PMP. The completion and implementation of a Pollution Prevention Plan, if required pursuant to Water Code section 13263.3(d), shall be considered to fulfill the PMP requirements.

Pollution Prevention
Pollution Prevention means any action that causes a net reduction in the use or generation of a hazardous substance or other pollutant that is discharged into water and includes, but is not limited to, input change, operational improvement, production process change, and product reformulation (as defined in Water Code section 13263.3). Pollution prevention does not include actions that merely shift a pollutant in wastewater from one environmental medium to another environmental medium, unless clear environmental benefits of such an approach are identified to the satisfaction of the State or Regional Water Board.

Satellite Collection System
The portion, if any, of a sanitary sewer system owned or operated by a different public agency than the agency that owns and operates the wastewater treatment facility that a sanitary sewer system is tributary to.

Source of Drinking Water
Any water designated as municipal or domestic supply (MUN) in a Regional Water Board Basin Plan.

Standard Deviation (σ)
Standard Deviation is a measure of variability that is calculated as follows:

$$\sigma = (\sum[(x - \mu)^2]/(n - 1))^{0.5}$$

where:

- x is the observed value;
- μ is the arithmetic mean of the observed values; and
- n is the number of samples.

Total Maximum Daily Load

Toxicity Reduction Evaluation (TRE)
TRE is a study conducted in a step-wise process designed to identify the causative agents of effluent or ambient toxicity, isolate the sources of toxicity, evaluate the effectiveness of toxicity control options, and then confirm the reduction in toxicity. The first steps of the TRE consist of the collection of data relevant to the toxicity, including additional toxicity testing, and an evaluation of facility operations and maintenance practices, and best management practices. A Toxicity Identification Evaluation (TIE) may be required as part of the TRE, if appropriate. (A TIE is a set of procedures to identify the specific chemical(s) responsible for toxicity. These procedures are performed in three phases (characterization, identification, and confirmation) using aquatic organism toxicity tests.)

Toxicity Test
The procedure using living organisms to determine whether a chemical or an effluent is toxic. A toxicity test measures the degree of the effect of a specific chemical or effluent on exposed test organisms.

Toxicity Unit
The measure of toxicity in an effluent as determined by the acute toxic units (TU_a) or chronic toxic units (TU_c) measured. The larger the TU, the greater the toxicity.

ATTACHMENT B – MAP

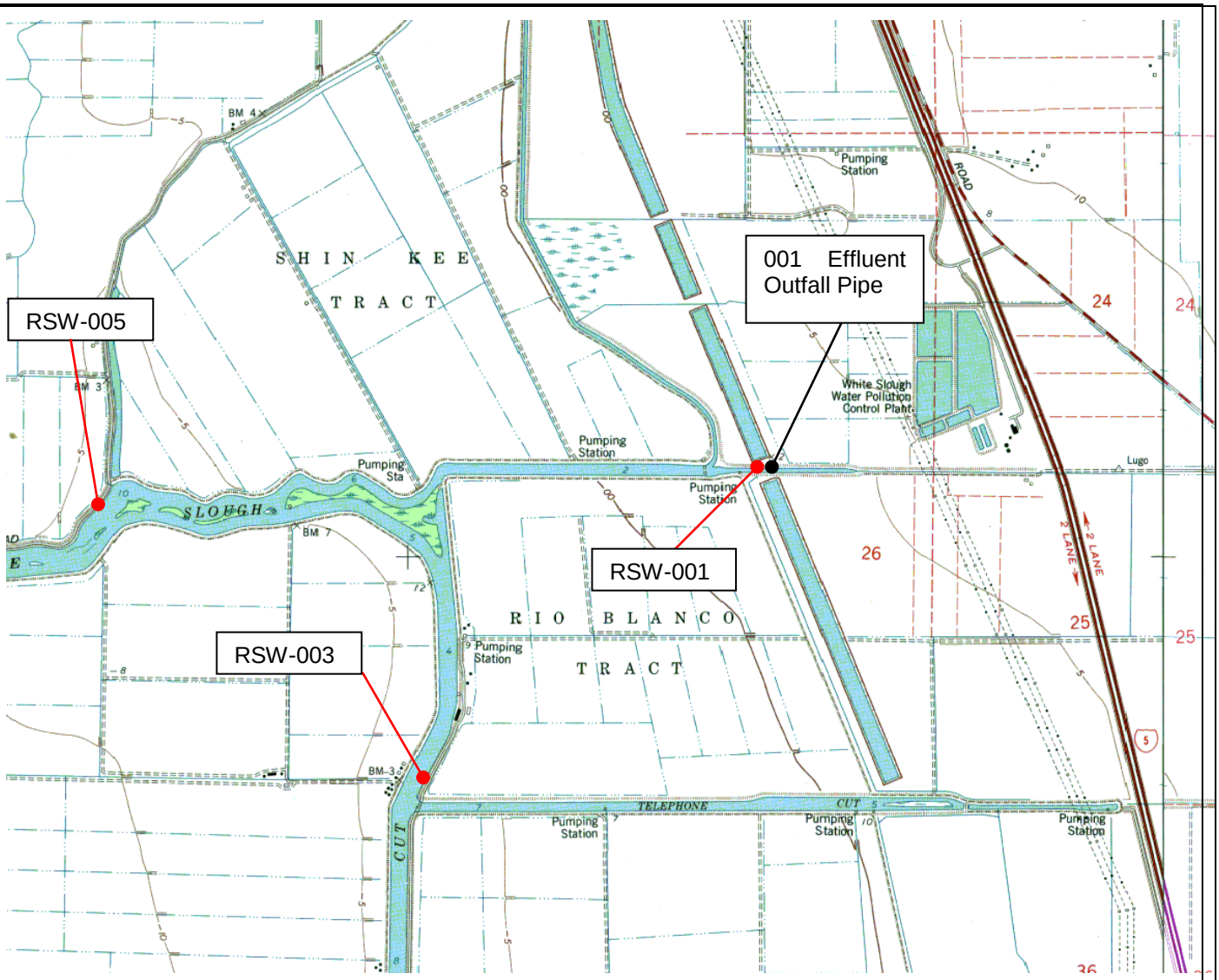

Drawing Reference:	CITY OF LODI	
U.S.G.S TOPOGRAPHIC MAP 7.5 MINUTE QUADRANGLE *Photo revised 1973* *Not to scale*	**WHITE SLOUGH WATER POLLUTION CONTROL FACILITY** **SAN JOAQUIN COUNTY**	N W E S

ATTACHMENT C – FLOW SCHEMATIC

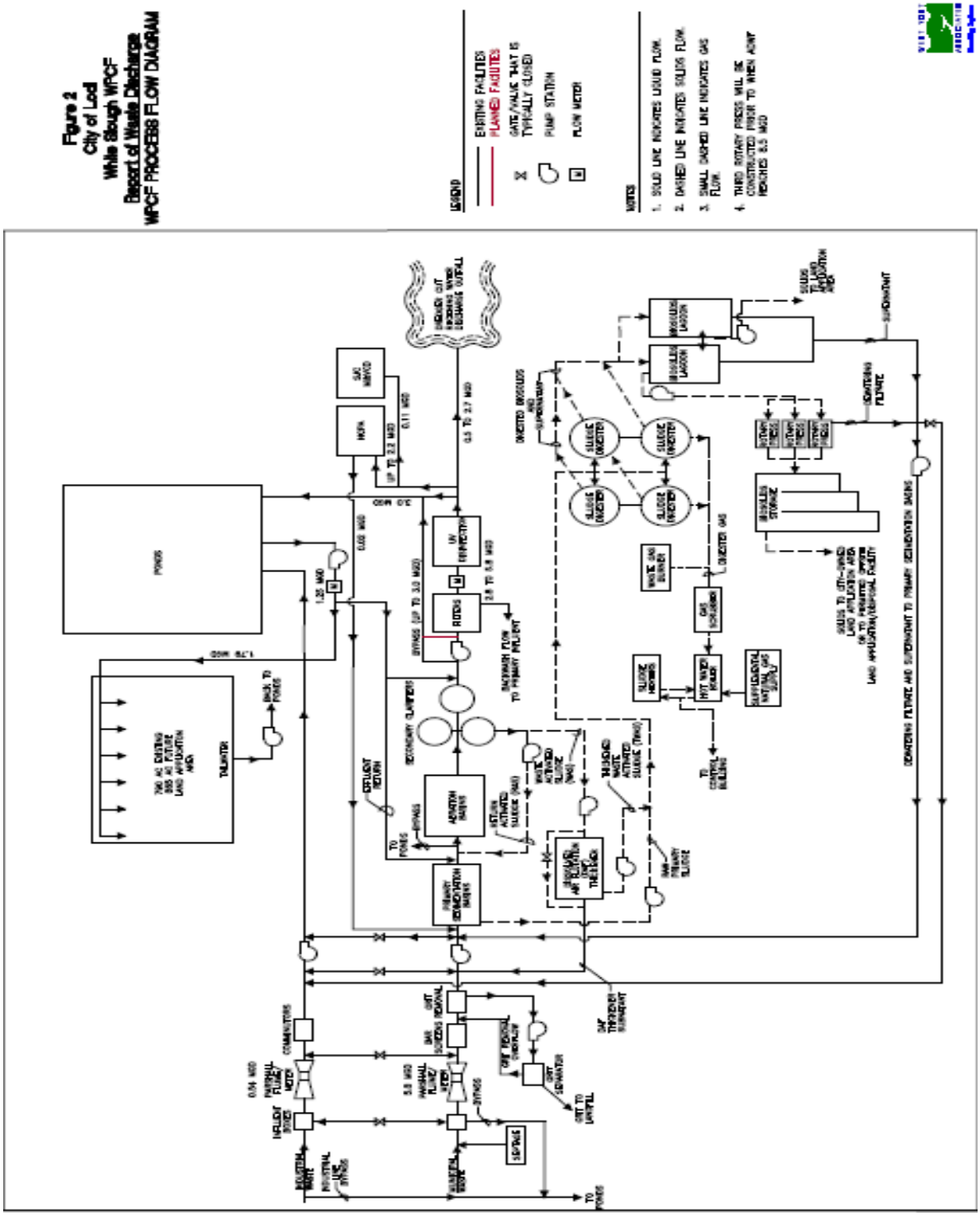

ATTACHMENT D – STANDARD PROVISIONS

I. STANDARD PROVISIONS – PERMIT COMPLIANCE

A. Duty to Comply

1. The Discharger must comply with all of the conditions of this Order. Any noncompliance constitutes a violation of the Clean Water Act (CWA) and the California Water Code (Water Code) and is grounds for enforcement action, for permit termination, revocation and reissuance, or modification; or denial of a permit renewal application. (40 CFR 122.41(a).)

2. The Discharger shall comply with effluent standards or prohibitions established under section 307(a) of the CWA for toxic pollutants and with standards for sewage sludge use or disposal established under section 405(d) of the CWA within the time provided in the regulations that establish these standards or prohibitions, even if this Order has not yet been modified to incorporate the requirement. (40 CFR 122.41(a)(1).)

B. Need to Halt or Reduce Activity Not a Defense

It shall not be a defense for a Discharger in an enforcement action that it would have been necessary to halt or reduce the permitted activity in order to maintain compliance with the conditions of this Order. (40 CFR 122.41(c))

C. Duty to Mitigate

The Discharger shall take all reasonable steps to minimize or prevent any discharge or sludge use or disposal in violation of this Order that has a reasonable likelihood of adversely affecting human health or the environment. (40 CFR 122.41(d))

D. Proper Operation and Maintenance

The Discharger shall at all times properly operate and maintain all facilities and systems of treatment and control (and related appurtenances) which are installed or used by the Discharger to achieve compliance with the conditions of this Order. Proper operation and maintenance also includes adequate laboratory controls and appropriate quality assurance procedures. This provision requires the operation of backup or auxiliary facilities or similar systems that are installed by a Discharger only when necessary to achieve compliance with the conditions of this Order. (40 CFR 122.41(e).)

E. Property Rights

1. This Order does not convey any property rights of any sort or any exclusive privileges. (40 CFR 122.41(g))

2. The issuance of this Order does not authorize any injury to persons or property or invasion of other private rights, or any infringement of state or local law or regulations. (40 CFR 122.5(c))

F. Inspection and Entry

The Discharger shall allow the Regional Water Board, State Water Board, United States Environmental Protection Agency (USEPA), and/or their authorized representatives (including an authorized contractor acting as their representative), upon the presentation of credentials and other documents, as may be required by law, to (40 CFR 122.41(i); Water Code section 13383):

1. Enter upon the Discharger's premises where a regulated facility or activity is located or conducted, or where records are kept under the conditions of this Order (40 CFR 122.41(i)(1));

2. Have access to and copy, at reasonable times, any records that must be kept under the conditions of this Order (40 CFR 122.41(i)(2));

3. Inspect and photograph, at reasonable times, any facilities, equipment (including monitoring and control equipment), practices, or operations regulated or required under this Order (40 CFR 122.41(i)(3)); and

4. Sample or monitor, at reasonable times, for the purposes of assuring Order compliance or as otherwise authorized by the CWA or the Water Code, any substances or parameters at any location. (40 CFR 122.41(i)(4))

G. Bypass

1. Definitions

a. “Bypass” means the intentional diversion of waste streams from any portion of a treatment facility. (40 CFR 122.41(m)(1)(i))

b. “Severe property damage” means substantial physical damage to property, damage to the treatment facilities, which causes them to become inoperable, or substantial and permanent loss of natural resources that can reasonably be expected to occur in the absence of a bypass. Severe property damage does not mean economic loss caused by delays in production.
(40 CFR 122.41(m)(1)(ii))

2. Bypass not exceeding limitations. The Discharger may allow any bypass to occur which does not cause exceedances of effluent limitations, but only if it is for essential maintenance to assure efficient operation. These bypasses are not subject to the provisions listed in Standard Provisions – Permit Compliance I.G.3, I.G.4, and I.G.5 below. (40 CFR 122.41(m)(2))

3. Prohibition of bypass. Bypass is prohibited, and the Regional Water Board may take enforcement action against a Discharger for bypass, unless (40 CFR 122.41(m)(4)(i)):

a. Bypass was unavoidable to prevent loss of life, personal injury, or severe property damage (40 CFR 122.41(m)(4)(i)(A));

b. There were no feasible alternatives to the bypass, such as the use of auxiliary treatment facilities, retention of untreated wastes, or maintenance during normal periods of equipment downtime. This condition is not satisfied if adequate back-up equipment should have been installed in the exercise of reasonable engineering judgment to prevent a bypass that occurred during normal periods of equipment downtime or preventive maintenance (40 CFR 122.41(m)(4)(i)(B)); and

c. The Discharger submitted notice to the Regional Water Board as required under Standard Provisions – Permit Compliance I.G.5 below. (40 CFR 122.41(m)(4)(i)(C))

4. The Regional Water Board may approve an anticipated bypass, after considering its adverse effects, if the Regional Water Board determines that it will meet the three conditions listed in Standard Provisions – Permit Compliance I.G.3 above. (40 CFR 122.41(m)(4)(ii))

5. Notice

a. Anticipated bypass. If the Discharger knows in advance of the need for a bypass, it shall submit a notice, if possible at least 10 days before the date of the bypass. (40 CFR 122.41(m)(3)(i))

b. Unanticipated bypass. The Discharger shall submit notice of an unanticipated bypass as required in Standard Provisions - Reporting V.E below (24-hour notice). (40 CFR 122.41(m)(3)(ii))

H. Upset

Upset means an exceptional incident in which there is unintentional and temporary noncompliance with technology based permit effluent limitations because of factors beyond the reasonable control of the Discharger. An upset does not include noncompliance to the extent caused by operational error, improperly designed treatment facilities, inadequate treatment facilities, lack of preventive maintenance, or careless or improper operation. (40 CFR 122.41(n)(1))

1. Effect of an upset. An upset constitutes an affirmative defense to an action brought for noncompliance with such technology based permit effluent limitations if the requirements of Standard Provisions – Permit Compliance I.H.2 below are met. No determination made during administrative review of claims that noncompliance was caused by upset, and before an action for noncompliance, is final administrative action subject to judicial review. (40 CFR 122.41(n)(2))

2. Conditions necessary for a demonstration of upset. A Discharger who wishes to establish the affirmative defense of upset shall demonstrate, through properly signed, contemporaneous operating logs or other relevant evidence that (40 CFR 122.41(n)(3)):

a. An upset occurred and that the Discharger can identify the cause(s) of the upset (40 CFR 122.41(n)(3)(i));

b. The permitted facility was, at the time, being properly operated (40 CFR 122.41(n)(3)(ii));

c. The Discharger submitted notice of the upset as required in Standard Provisions – Reporting V.E.2.b below (24-hour notice) (40 CFR 122.41(n)(3)(iii)); and

d. The Discharger complied with any remedial measures required under Standard Provisions – Permit Compliance I.C above. (40 CFR 122.41(n)(3)(iv))

3. Burden of proof. In any enforcement proceeding, the Discharger seeking to establish the occurrence of an upset has the burden of proof. (40 CFR 122.41(n)(4))

II. STANDARD PROVISIONS – PERMIT ACTION

A. General

This Order may be modified, revoked and reissued, or terminated for cause. The filing of a request by the Discharger for modification, revocation and reissuance, or termination, or a notification of planned changes or anticipated noncompliance does not stay any Order condition. (40 CFR 122.41(f))

B. Duty to Reapply

If the Discharger wishes to continue an activity regulated by this Order after the expiration date of this Order, the Discharger must apply for and obtain a new permit. (40 CFR 122.41(b))

C. Transfers

This Order is not transferable to any person except after notice to the Regional Water Board. The Regional Water Board may require modification or revocation and reissuance of the Order to change the name of the Discharger and incorporate such other requirements as may be necessary under the CWA and the Water Code. (40 CFR 122.41(l)(3) and 122.61)

III. STANDARD PROVISIONS – MONITORING

A. Samples and measurements taken for the purpose of monitoring shall be representative of the monitored activity. (40 CFR 122.41(j)(1))

B. Monitoring results must be conducted according to test procedures under 40 CFR Part 136 or, in the case of sludge use or disposal, approved under 40 CFR Part 136 unless otherwise specified in 40 CFR Part 503 unless other test procedures have been specified in this Order. (40 CFR 122.41(j)(4) and 122.44(i)(1)(iv))

IV. STANDARD PROVISIONS – RECORDS

A. Except for records of monitoring information required by this Order related to the Discharger's sewage sludge use and disposal activities, which shall be retained for a period of at least 5 years (or longer as required by 40 CFR Part 503), the Discharger shall retain records of all monitoring information, including all calibration and maintenance records and all original strip chart recordings for continuous monitoring instrumentation, copies of all reports required by this Order, and records of all data used to complete the application for this Order, for a period of at least three (3) years from the date of the sample, measurement, report or application. This period may be extended by request of the Regional Water Board Executive Officer at any time. (40 CFR 122.41(j)(2))

B. Records of monitoring information shall include:

1. The date, exact place, and time of sampling or measurements (40 CFR 122.41(j)(3)(i));

2. The individual(s) who performed the sampling or measurements (40 CFR 122.41(j)(3)(ii));

3. The date(s) analyses were performed (40 CFR 122.41(j)(3)(iii));

4. The individual(s) who performed the analyses (40 CFR 122.41(j)(3)(iv));

5. The analytical techniques or methods used (40 CFR 122.41(j)(3)(v)); and

6. The results of such analyses. (40 CFR 122.41(j)(3)(vi))

C. Claims of confidentiality for the following information will be denied (40 CFR 122.7(b)):

1. The name and address of any permit applicant or Discharger (40 CFR 122.7(b)(1)); and

2. Permit applications and attachments, permits and effluent data. (40 CFR 122.7(b)(2))

V. STANDARD PROVISIONS – REPORTING

A. Duty to Provide Information

The Discharger shall furnish to the Regional Water Board, State Water Board, or USEPA within a reasonable time, any information which the Regional Water Board,

State Water Board, or USEPA may request to determine whether cause exists for modifying, revoking and reissuing, or terminating this Order or to determine compliance with this Order. Upon request, the Discharger shall also furnish to the Regional Water Board, State Water Board, or USEPA copies of records required to be kept by this Order. (40 CFR 122.41(h); Wat. Code, § 13267)

B. Signatory and Certification Requirements

1. All applications, reports, or information submitted to the Regional Water Board, State Water Board, and/or USEPA shall be signed and certified in accordance with Standard Provisions – Reporting V.B.2, V.B.3, V.B.4, and V.B.5 below. (40 CFR 122.41(k))

2. All permit applications shall be signed by either a principal executive officer or ranking elected official. For purposes of this provision, a principal executive officer of a federal agency includes: (i) the chief executive officer of the agency, or (ii) a senior executive officer having responsibility for the overall operations of a principal geographic unit of the agency (e.g., Regional Administrators of USEPA). (40 CFR 122.22(a)(3))

3. All reports required by this Order and other information requested by the Regional Water Board, State Water Board, or USEPA shall be signed by a person described in Standard Provisions – Reporting V.B.2 above, or by a duly authorized representative of that person. A person is a duly authorized representative only if:

a. The authorization is made in writing by a person described in Standard Provisions – Reporting V.B.2 above (40 CFR 122.22(b)(1));

b. The authorization specifies either an individual or a position having responsibility for the overall operation of the regulated facility or activity such as the position of plant manager, operator of a well or a well field, superintendent, position of equivalent responsibility, or an individual or position having overall responsibility for environmental matters for the company. (A duly authorized representative may thus be either a named individual or any individual occupying a named position.) (40 CFR 122.22(b)(2)); and

c. The written authorization is submitted to the Regional Water Board and State Water Board. (40 CFR 122.22(b)(3))

4. If an authorization under Standard Provisions – Reporting V.B.3 above is no longer accurate because a different individual or position has responsibility for the overall operation of the facility, a new authorization satisfying the requirements of Standard Provisions – Reporting V.B.3 above must be submitted to the Regional Water Board and State Water Board prior to or together with any reports, information, or applications, to be signed by an authorized representative. (40 CFR 122.22(c))

5. Any person signing a document under Standard Provisions – Reporting V.B.2 or V.B.3 above shall make the following certification:

"*I certify under penalty of law that this document and all attachments were prepared under my direction or supervision in accordance with a system designed to assure that qualified personnel properly gather and evaluate the information submitted. Based on my inquiry of the person or persons who manage the system or those persons directly responsible for gathering the information, the information submitted is, to the best of my knowledge and belief, true, accurate, and complete. I am aware that there are significant penalties for submitting false information, including the possibility of fine and imprisonment for knowing violations.*"
(40 CFR 122.22(d))

C. Monitoring Reports

1. Monitoring results shall be reported at the intervals specified in the Monitoring and Reporting Program (Attachment E) in this Order. (40 CFR 122.22(l)(4))

2. Monitoring results must be reported on a Discharge Monitoring Report (DMR) form or forms provided or specified by the Regional Water Board or State Water Board for reporting results of monitoring of sludge use or disposal practices.
(40 CFR 122.41(l)(4)(i))

3. If the Discharger monitors any pollutant more frequently than required by this Order using test procedures approved under 40 CFR Part 136 or, in the case of sludge use or disposal, approved under 40 CFR Part 136 unless otherwise specified in 40 CFR Part 503, or as specified in this Order, the results of this monitoring shall be included in the calculation and reporting of the data submitted in the DMR or sludge reporting form specified by the Regional Water Board.
(40 CFR 122.41(l)(4)(ii))

4. Calculations for all limitations, which require averaging of measurements, shall utilize an arithmetic mean unless otherwise specified in this Order.
(40 CFR 122.41(l)(4)(iii))

D. Compliance Schedules

Reports of compliance or noncompliance with, or any progress reports on, interim and final requirements contained in any compliance schedule of this Order, shall be submitted no later than 14 days following each schedule date. (40 CFR 122.41(l)(5))

E. Twenty-Four Hour Reporting

1. The Discharger shall notify the Office of Emergency Services of any noncompliance that may endanger health or the environment within two (2) hours from the time the Discharger becomes aware of the circumstances. The Discharger shall notify the Central Valley Water Board of the noncompliance by telephone or fax within 24 hours from the time the Discharger becomes aware of the circumstances. A written submission shall also be provided to the Central Valley Water Board within five (5) days of the time the Discharger becomes aware of the circumstances. The written submission shall contain a description of the

noncompliance and its cause; the period of noncompliance, including exact dates and times, and if the noncompliance has not been corrected, the anticipated time it is expected to continue; and steps taken or planned to reduce, eliminate, and prevent reoccurrence of the noncompliance. (40 CFR 122.41(l)(6)(i))

2. The following shall be included as information that must be reported within 24 hours under this paragraph (40 CFR 122.41(l)(6)(ii)):

d. Any unanticipated bypass that exceeds any effluent limitation in this Order. (40 CFR 122.41(l)(6)(ii)(A))

e. Any upset that exceeds any effluent limitation in this Order. (40 CFR 122.41(l)(6)(ii)(B))

3. The Regional Water Board may waive the above-required written report under this provision on a case-by-case basis if an oral report has been received within 24 hours. (40 CFR 122.41(l)(6)(iii))

F. Planned Changes

The Discharger shall give notice to the Regional Water Board as soon as possible of any planned physical alterations or additions to the permitted facility. Notice is required under this provision only when (40 CFR 122.41(l)(1)):

1. The alteration or addition to a permitted facility may meet one of the criteria for determining whether a facility is a new source in 40 CFR 122.29(b) (40 CFR 122.41(l)(1)(i)); or

2. The alteration or addition could significantly change the nature or increase the quantity of pollutants discharged. This notification applies to pollutants that are not subject to effluent limitations in this Order. (40 CFR 122.41(l)(1)(ii))

3. The alteration or addition results in a significant change in the Discharger's sludge use or disposal practices, and such alteration, addition, or change may justify the application of permit conditions that are different from or absent in the existing permit, including notification of additional use or disposal sites not reported during the permit application process or not reported pursuant to an approved land application plan. (40 CFR 122.41(l)(1)(iii))

G. Anticipated Noncompliance

The Discharger shall give advance notice to the Regional Water Board or State Water Board of any planned changes in the permitted facility or activity that may result in noncompliance with General Order requirements. (40 CFR 122.41(l)(2))

H. Other Noncompliance

The Discharger shall report all instances of noncompliance not reported under Standard Provisions – Reporting V.C, V.D, and V.E above at the time monitoring

reports are submitted. The reports shall contain the information listed in Standard Provision – Reporting V.E above. (40 CFR 122.41(l)(7))

I. Other Information

When the Discharger becomes aware that it failed to submit any relevant facts in a permit application, or submitted incorrect information in a permit application or in any report to the Regional Water Board, State Water Board, or USEPA, the Discharger shall promptly submit such facts or information. (40 CFR 122.41(l)(8))

VI. STANDARD PROVISIONS – ENFORCEMENT

A. The Regional Water Board is authorized to enforce the terms of this permit under several provisions of the Water Code, including, but not limited to, sections 13385, 13386, and 13387.

VII. ADDITIONAL PROVISIONS – NOTIFICATION LEVELS

A. Publicly-Owned Treatment Works (POTWs)

All POTWs shall provide adequate notice to the Regional Water Board of the following (40 CFR 122.42(b)):

1. Any new introduction of pollutants into the POTW from an indirect discharger that would be subject to sections 301 or 306 of the CWA if it were directly discharging those pollutants (40 CFR 122.42(b)(1)); and

2. Any substantial change in the volume or character of pollutants being introduced into that POTW by a source introducing pollutants into the POTW at the time of adoption of the Order. (40 CFR 122.42(b)(2))

3. Adequate notice shall include information on the quality and quantity of effluent introduced into the POTW as well as any anticipated impact of the change on the quantity or quality of effluent to be discharged from the POTW. (40 CFR 122.42(b)(3))

ATTACHMENT E – MONITORING AND REPORTING PROGRAM

Contents

I. General Monitoring Provisions E-2
II. Monitoring Locations E-3
III. Influent Monitoring Requirements E-4
A. Municipal Monitoring Location – INF-001 ..... E-4
IV. Effluent Monitoring Requirements E-4
A. Monitoring Location Municipal Effluent – EFF-001 ..... E-4
V. Whole Effluent Toxicity Testing Requirements E-5
VI. Land Discharge Monitoring Requirements (Not Applicable) E-9
VII. Reclamation Monitoring Requirements (Not Applicable) E-9
VIII. Receiving Water Monitoring Requirements – Surface Water E-9
A. Surface Water Monitoring Locations RSW-00, RSW-003, and RSW-005 ..... E-9
IX. Other Monitoring Requirements E-10
A. Municipal Water Supply E-10
B. Ultraviolet Light (UV) Disinfection System E-10
X. Reporting Requirements E-11
A. General Monitoring and Reporting Requirements E-11
B. Self Monitoring Reports (SMRs) E-11
C. Discharge Monitoring Reports (DMRs) E-15
D. Other Reports E-16

List of Tables

Table E-1. Monitoring Station Locations E-3
Table E-2. Municipal Influent Monitoring E-4
Table E-3. Effluent Monitoring - EFF-001 ..... E-4
Table E-4. Chronic Toxicity Testing Dilution Series E-7
Table E-5a. Receiving Water Monitoring Requirements E-9
Table E-6. Municipal Water Supply Monitoring Requirements E-10
Table E-7. Ultraviolet Light Disinfection System Monitoring E-10
Table E-8. Monitoring Periods and Reporting Schedule E-12
Table E-9. Reporting Requirements for Special Provisions Reports E-16

ATTACHMENT E – MONITORING AND REPORTING PROGRAM

Title 40 of the Code of Federal Regulations (CFR), section 122.48 (40 CFR 122.48) requires that all NPDES permits specify monitoring and reporting requirements. California Water Code (Water Code) sections 13267 and 13383 also authorize the Regional Water Quality Control Board, Central Valley Region (Central Valley Water Board) to require technical and monitoring reports. This Monitoring and Reporting Program establishes monitoring and reporting requirements, which implement the federal and California regulations.

I. GENERAL MONITORING PROVISIONS

A. Samples and measurements taken as required herein shall be representative of the volume and nature of the monitored discharge. All samples shall be taken at the monitoring locations specified below and, unless otherwise specified, before the monitored flow joins or is diluted by any other waste stream, body of water, or substance. Monitoring locations shall not be changed without notification to and the approval of the Central Valley Water Board.

B. Effluent samples shall be taken downstream of the last addition of wastes to the treatment or discharge works where a representative sample may be obtained prior to mixing with the receiving waters. Samples shall be collected at such a point and in such a manner to ensure a representative sample of the discharge.

C. Chemical, bacteriological, and bioassay analyses of any material required by this Order shall be conducted by a laboratory certified for such analyses by the Department of Public Health (DPH). Laboratories that perform sample analyses must be identified in all monitoring reports submitted to the Central Valley Water Board. In the event a certified laboratory is not available to the Discharger for any onsite field measurements such as pH, DO, turbidity, temperature, and residual chlorine, such analyses performed by a noncertified laboratory will be accepted provided a Quality Assurance-Quality Control Program is instituted by the laboratory. A manual containing the steps followed in this program for any onsite field measurements such as pH, DO, turbidity, temperature, and residual chlorine must be kept onsite in the treatment facility laboratory and shall be available for inspection by Central Valley Water Board staff. The Discharger must demonstrate sufficient capability (qualified and trained employees, properly calibrated and maintained field instruments, etc.) to adequately perform these field measurements. The Quality Assurance-Quality Control Program must conform to USEPA guidelines or to procedures approved by the Central Valley Water Board.

D. Appropriate flow measurement devices and methods consistent with accepted scientific practices shall be selected and used to ensure the accuracy and reliability of measurements of the volume of monitored discharges. All monitoring instruments and devices used by the Discharger to fulfill the prescribed monitoring program shall be properly maintained and calibrated as necessary, at least yearly, to ensure their continued accuracy. All flow measurement devices shall be calibrated at least once per year to ensure continued accuracy of the devices.

E. Monitoring results, including noncompliance, shall be reported at intervals and in a manner specified in this Monitoring and Reporting Program.

F. Laboratories analyzing monitoring samples shall be certified by DPH, in accordance with the provision of CWC section 13176, and must include quality assurance/quality control data with their reports.

G. The Discharger shall conduct analysis on any sample provided by USEPA as part of the Discharge Monitoring Quality Assurance (DMQA) program. The results of any such analysis shall be submitted to USEPA's DMQA manager.

H. The Discharger shall file with the Central Valley Water Board technical reports on self-monitoring performed according to the detailed specifications contained in this Monitoring and Reporting Program.

I. The results of all monitoring required by this Order shall be reported to the Central Valley Water Board, and shall be submitted in such a format as to allow direct comparison with the limitations and requirements of this Order. Unless otherwise specified, discharge flows shall be reported in terms of the monthly average and the daily maximum discharge flows.

II. MONITORING LOCATIONS

Table E-1. Monitoring Station Locations

Discharge Point Name[1]	Monitoring Location Name	Monitoring Location Description
--	INF-001	Municipal Influent to Facility
001	EFF-001[1]	At the filter pump station effluent box (38º 05' 22.9" N, 121º 23' 07.1" W), at which all waste tributary to the discharge outfall is present, is representative of the discharge, and at which point adequate disinfection is assured for the discharge of tertiary treated municipal effluent to Dredger Cut.
	UVS-001	After secondary clarifiers and before disinfection.
--	RSW-001[1]	At the east side of the middle of the bridge crossing over Dredger Cut (38º, 05', 13.4" N, 121º, 24', 04.6" W), approximately 1000 feet west of the effluent discharge end of pipe. Note "end of pipe" is at the east end of Dredger Cut (38º 05' 14.1" N, 121º 23' 52.2" W)
--	RSW-003[1]	At the eastside of Bishop Cut at Telephone Cut, 300 feet north of the north-end of the Telephone Cut bridge. (38º, 04', 24.8" N, 121º, 25', 00.2" W)
--	RSW-005[1]	North Channel White Slough at Upland Canal, approximately 5330 feet west of the confluence of Dredger Cut, White Slough, and Bishop Cut. (38º, 05', 12.30" N, 121º, 26', 01.65" W)
--	SPL-001	Municipal Water Supply

[1] See Attachment B

III. INFLUENT MONITORING REQUIREMENTS

A. Municipal Monitoring Location – INF-001

a. The Discharger shall monitor municipal influent at INF-001 as follows. Influent samples shall be collected at approximately the same time as effluent samples and shall be representative of the influent:

Table E-2. Municipal Influent Monitoring

Parameter	Units	Sample Type	Minimum Sampling Frequency	Required Analytical Test Method
Flow	MGD	Meter	Continuous	[1]
BOD 5-day @ 20°C	mg/L	24-hr Composite [3]	1/Week	[1]
Total Suspended Solids	mg/L	24-hr Composite [3]	1/Week	[1]
Electrical Conductivity @ 25°C	umhos/cm	Grab[2]	1/week	[1]
Total Dissolved Solids	mg/L	Grab [2]	1/quarter	[1]

[1] Pollutants shall be analyzed using the analytical methods described in 40 CFR Part 136; or by methods approved by the Central Valley Water Board or the State Water Board.
[2] Grab samples shall <u>not</u> be collected at the same time each day to get a complete representation of variations in the influent.
[3] 24-hour flow proportional composite.

IV. EFFLUENT MONITORING REQUIREMENTS

A. Monitoring Location Municipal Effluent – EFF-001

1. The Discharger shall monitor treated municipal effluent at EFF-001 as follows. If more than one analytical test method is listed for a given parameter, the Discharger must select from the listed methods and corresponding Minimum Level. Sampling is not required during periods when no municipal effluent is directed to Dredger Cut:

Table E-3. Effluent Monitoring - EFF-001

Parameter	Units	Sample Type	Minimum Sampling Frequency	Required Analytical Test Method
Flow	mgd	Meter	Continuous	--
Biochemical Oxygen Demand (BOD) (5-day @ 20 Deg. C)	mg/L	24-hr Composite [2]	1/Day	[1]
	lbs/day	Calculate	1/Day	--
Total Suspended Solids	mg/L	24-hr Composite [2]	1/Day	[1]
	lbs/day	Calculate	1/Day	--
pH	Standard Units	Grab	1/Week [3,4]	[1]
Dissolved Oxygen	mg/L	Grab	1/Day[4]	
Chlorpryifos	µg/L	24-hr Composite [2,9]	1/year	[1]
Diazinon	µg/L	24-hr Composite [2,9]	1/year	[1]
Endrin	µg/L	24-hr Composite [2,9]	1/Quarter	
Ammonia Nitrogen, Total (as N)	mg/L	Grab	1/Week [3,9,12]	[1]
Electrical Conductivity @ 25°C	µmhos/cm	24-hr Composite [2]	1/Month[4]	[1]

Hardness (as $CaCO_3$)	mg/L	24-hr Composite [2]	1/Month[10]	[1]
Mercury (methyl)	µg/L	Grab	1/Month	[11]
Mercury, Total Recoverable	µg/L	Grab	1/Month	[11]
Nitrate + Nitrite, Total (as N)	mg/L	Grab	1/Week[12]	[1]
Temperature	°C	Meter	Continuous [3]	[1]
Total Residual Chlorine	mg/L	Grab	1/day[8]	
Total Coliform Organisms	MPN/100 mL	Grab	1/Day[13]	[1]
Total Dissolved Solids	mg/L	24-hr Composite [2]	1/Month	[1]
Priority Pollutants and Other Constituents of Concern	µg/L	See Att I	See Att I[1,5,,6,7,10,11, 14]	[1, 5]
Whole Effluent Toxicity (see Section V. below)	--	--	--	--

[1] Pollutants shall be analyzed using the analytical methods described in 40 CFR Part 136 or by methods approved by the Central Valley Water Board or the State Water Board.
[2] 24-hour flow proportional composite.
[3] pH and temperature shall be recorded at the time of ammonia sample collection.
[4] A hand-held field meter may be used, provided the meter utilizes a USEPA-approved algorithm/method and is calibrated and maintained in accordance with the manufacturer's instructions. A calibration and maintenance log for each meter used for monitoring required by this Monitoring and Reporting Program shall be maintained at the Facility.
[5] For priority pollutant constituents the reporting level shall be consistent with Sections 2.4.2 and 2.4.3 of the Policy for Implementation of Toxics Standards for Inland Surface Waters, Enclosed Bays, and Estuaries of California (See Attachment I, Table I-1).
[6] Volatile constituents shall be sampled in accordance with 40 CFR Part 136 or by methods approved by the Central Valley Water Board or the State Water Board.
[7] Concurrent with receiving surface water sampling and conducted concurrently with upstream receiving water monitoring for hardness (as $CaCO_3$) and pH. Sampling shall be monthly from Sept-April for 1 year. Sample that are non-detect after the first 2 samples do not need to be sampled for the remaining permit term.
[8] Total chlorine residual must be monitored with a method sensitive to and accurate at the permitted level of 0.01 mg/L. Total residual chlorine is to be monitored only on days when chlorine is used at the Facility for maintenance or other purposes.
[9] Concurrent with whole effluent toxicity monitoring.
[10] Hardness samples shall be collected concurrently with metals samples.
[11] Unfiltered methyl and total mercury samples shall be taken using clean hands/dirty hands procedures, as described in U.S. EPA method 1669: Sampling Ambient Water for Trace Metals at EPA Water Quality Criteria Levels, for collection of equipment blanks (section 9.4.4.2), and shall be analyzed by U.S. EPA method 1630/1631 (Revision E).
[12] Monitoring for ammonia, nitrite and nitrate, shall be conducted concurrently.
[13] Samples for Total coliform organisms may be collected at any point following disinfection.
[14] Sampling and analysis of Bis (2-ethylhexyl) phthalate shall be conducted using ultra-clean techniques that minimize the possibility of sample contamination.

V. WHOLE EFFLUENT TOXICITY TESTING REQUIREMENTS

A. Acute Toxicity Testing. The Discharger shall conduct acute toxicity testing to determine whether the effluent is contributing acute toxicity to the receiving water. The Discharger shall meet the following acute toxicity testing requirements:

1. *Monitoring Frequency* – The Discharger shall perform monthly acute toxicity testing, concurrent with effluent ammonia sampling.

2. *Sample Types* – For static renewal testing, the samples shall be flow proportional 24-hour composites and shall be representative of the volume and quality of the discharge. The effluent samples shall be taken at the effluent monitoring location EFF-001.

3. *Test Species* – Test species shall be fathead minnows (*Pimephales promelas*).

4. *Methods* – The acute toxicity testing samples shall be analyzed using EPA-821-R-02-012, Fifth Edition. Temperature, total residual chlorine, and pH shall be recorded at the time of sample collection. No pH adjustment may be made unless approved by the Executive Officer.

5. *Test Failure* – If an acute toxicity test does not meet all test acceptability criteria, as specified in the test method, the Discharger must re-sample and re-test as soon as possible, not to exceed 7 days following notification of test failure.

B. Chronic Toxicity Testing. The Discharger shall conduct three species chronic toxicity testing to determine whether the effluent is contributing chronic toxicity to the receiving water. The Discharger shall meet the following chronic toxicity testing requirements:

1. *Monitoring Frequency –* The Discharger shall perform quarterly three species chronic toxicity testing.

2. *Sample Types* – Effluent samples shall be flow proportional 24-hour composites and shall be representative of the volume and quality of the discharge. The effluent samples shall be taken at the effluent monitoring location EFF-001. The receiving water control shall be a grab sample obtained from Bishop Cut RSW-003 sampling location, as identified in this Monitoring and Reporting Program.

3. *Sample Volumes* – Adequate sample volumes shall be collected to provide renewal water to complete the test in the event that the discharge is intermittent.

4. *Test Species* – Chronic toxicity testing measures sublethal (e.g., reduced growth, reproduction) and/or lethal effects to test organisms exposed to an effluent compared to that of the control organisms. The Discharger shall conduct chronic toxicity tests with:

   - The cladoceran, water flea, *Ceriodaphnia dubia* (survival and reproduction test);
   - The fathead minnow, *Pimephales promelas* (larval survival and growth test); and
   - The green alga, *Selenastrum capricornutum* (growth test).

5. *Methods* – The presence of chronic toxicity shall be estimated as specified in *Short-term Methods for Estimating the Chronic Toxicity of Effluents and Receiving*

Waters to Freshwater Organisms, Fourth Edition, EPA/821-R-02-013, October 2002.

6. *Reference Toxicant* – As required by the SIP, all chronic toxicity tests shall be conducted with concurrent testing with a reference toxicant and shall be reported with the chronic toxicity test results.

7. *Dilutions/Control* – For regular and accelerated chronic toxicity monitoring, it is not necessary to perform the test using a dilution series. The chronic toxicity testing shall be performed using 100% effluent and one control. A receiving water control or laboratory water control may be used as the control water. For TRE monitoring, the chronic toxicity testing shall be performed using the dilution series identified in Table E-4, below, unless use of an alternative dilution series is detailed in the submitted TRE Action Plan.

Table E-4. Chronic Toxicity Testing Dilution Series

	Dilutions (%)					Control
	100	**75**	**50**	**25**	**12.5**	
% Effluent	100	75	50	25	12.5	0
% Control Water	0	25	50	75	87.5	100

8. *Test Failure* – The Discharger must re-sample and re-test as soon as possible, but no later than fourteen (14) days after receiving notification of a test failure. A test failure is defined as follows:

   a. The reference toxicant test or the effluent test does not meet all test acceptability criteria as specified in the *Short-term Methods for Estimating the Chronic Toxicity of Effluents and Receiving Waters to Freshwater Organisms, Fourth Edition*, EPA/821-R-02-013, October 2002 (Method Manual), and its subsequent amendments or revisions; or

   b. The percent minimum significant difference (PMSD) measured for the test exceeds the upper PMSD bound variability criterion in Table 6 on page 52 of the Method Manual. (A retest is only required in this case if the test results do not exceed the monitoring trigger specified in the Special Provision at section VI. C.2.a.ii. of the Order.)

B. WET Testing Notification Requirements. The Discharger shall notify the Central Valley Water Board within 24-hours after the receipt of test results exceeding the monitoring trigger during regular or accelerated monitoring, or an exceedance of the acute toxicity effluent limitation.

C. WET Testing Reporting Requirements. All toxicity test reports shall include the contracting laboratory's complete report provided to the Discharger and shall be in accordance with the appropriate "Report Preparation and Test Review" sections of the method manuals. At a minimum, whole effluent toxicity monitoring shall be reported as follows:

1. **Chronic WET Reporting.** Regular chronic toxicity monitoring results shall be reported to the Central Valley Water Board within 45 days following completion of the test, and shall contain, at minimum:

   a. The results expressed in TUc, measured as 100/NOEC, and also measured as 100/LC50, 100/EC25, 100/IC25, and 100/IC50, as appropriate.

   b. The statistical methods used to calculate endpoints;

   c. The statistical output page, which includes the calculation of the percent minimum significant difference (PMSD);

   d. The dates of sample collection and initiation of each toxicity test; and

   e. The results compared to the numeric toxicity monitoring trigger.

   Additionally, the monthly discharger self-monitoring reports shall contain an updated chronology of chronic toxicity test results expressed in TUc, and organized by test species, type of test (survival, growth or reproduction), and monitoring frequency, i.e., either quarterly, monthly, accelerated, or Toxicity Reduction Evaluation (TRE).

2. **Acute WET Reporting.** Acute toxicity test results shall be submitted with the monthly discharger self-monitoring reports and reported as percent survival.

3. **TRE Reporting.** Reports for TREs shall be submitted in accordance with the schedule contained in the Discharger's approved TRE Workplan.

4. **Quality Assurance (QA).** The Discharger must provide the following information for QA purposes:

   a. Results of the applicable reference toxicant data with the statistical output page giving the species, NOEC, LOEC, type of toxicant, dilution water used, concentrations used, PMSD, and dates tested.

   b. The reference toxicant control charts for each endpoint, which include summaries of reference toxicant tests performed by the contracting laboratory.

   c. Any information on deviations or problems encountered and how they were dealt with.

VI. LAND DISCHARGE MONITORING REQUIREMENTS (NOT APPLICABLE)

VII. RECLAMATION MONITORING REQUIREMENTS (NOT APPLICABLE)

VIII. RECEIVING WATER MONITORING REQUIREMENTS – SURFACE WATER

A. Surface Water Monitoring Locations RSW-001, RSW-003, and RSW-005

1. During months that a discharge occurs to Dredger Cut, the Discharger shall monitor the receiving water at RSW-001, RSW-003, and RSW-005 as follows:

Table E-5. Receiving Water Monitoring Requirements

Parameter	Units	Sample Type	Minimum Sampling Frequency	Required Analytical Test Method
Dissolved Oxygen	mg/L	Grab	1/week	[2]
pH[1]	Standard Units	Grab	1/week	[2]
Temperature[1]	°F (°C)	Grab	1/week	[2]
Electrical Conductivity @ 25°C	umhos/cm	Grab	1/week	[2]
Total Dissolved Solids	mg/L	Grab	1/quarter	[2]
Turbidity	NTU	Grab	1/week	[2]
Hardness as $CaCO_3$	mg/L	Grab	1/month	[2]
Ammonia (as N)[1]	mg/L	Grab	1/week	[2]
Priority Pollutants and Other Constituents of Concern[3, 4]	µg/L	Grab	See Attachment I	[2]

[1] Temperature and pH shall be determined at the time of sample collection.

[2] Pollutants shall be analyzed using the analytical methods described in 40 CFR Part 136 or by methods approved by the Central Valley Water Board or the State Water Board.

[3] Monitoring only required at RSW-005 in accordance with Attachment I.

[4] The maximum required Reporting Levels are specified in Attachment I, Table I-1, Priority Pollutants and Other Constituents of Concern.

In conducting the receiving water sampling, a log shall be kept of the receiving water conditions throughout the reach bounded by Stations RSW-001 through RSW-005. Attention shall also be given to the presence or absence of the following:

a. Floating or suspended matter
b. Discoloration
c. Bottom deposits
d. Aquatic life
e. Visible films, sheens or coatings
f. Fungi, slimes, or objectionable growths
g. Potential nuisance conditions

Notes on receiving water conditions shall be summarized in the monitoring report.

IX. OTHER MONITORING REQUIREMENTS

A. Municipal Water Supply

1. Monitoring Location SPL-001

The Discharger shall monitor the municipal water supply at SPL-001 as follows. A sampling station shall be established where a representative sample of the municipal water supply can be obtained. Municipal water supply samples shall be collected at approximately the same time as effluent samples.

Table E-6. Municipal Water Supply Monitoring Requirements

Parameter	Units	Sample Type	Minimum Sampling Frequency	Required Analytical Test Method
Total Dissolved Solids[1]	mg/L	Grab	1/year	
Electrical Conductivity @ 25°C[1]	µmhos/cm	Grab	1/year	
Standard Minerals[2]	mg/L	Grab	1/year	

1 If the water supply is from more than one source, the total dissolved solids and electrical conductivity shall be reported as a weighted average and include copies of supporting calculations.
2 Standard minerals shall include all major cations and anions and include verification that the analysis is complete (i.e., cation/anion balance).

B. Ultraviolet Light (UV) Disinfection System

1. Monitoring Location UVS-001

The Discharger shall monitor the UV disinfection system at UVS-001 as follows:

Table E-7. Ultraviolet Light Disinfection System Monitoring

Parameter	Units	Sample Type	Minimum Sampling Frequency
Flow	MGD	Meter	Continuous [1]
Turbidity	NTU	Meter [2]	Continuous [1, 3]
Number of UV banks in operation	Number	Meter	Continuous [1]
UV Transmittance	Percent (%)	Meter	Continuous [1]
UV Dose [4]	MW-sec/cm [2]	Calculated	Continuous [1]

1 For continuous analyzers, the Discharger shall report documented routine meter maintenance activities including date, time of day, and duration, in which the analyzer(s) is not in operation.
2 The turbidity meter shall be stationed immediately after the filters, prior to the UV disinfection process.
3 Report daily average turbidity and maximum. If the influent exceeds 10 NTU, collect a sample for total coliform organisms and report the duration of the turbidity exceedance.
4 Report daily minimum UV dose and daily average UV dose.. For the daily minimum UV dose, also report associated number of banks, gallons per minute per lamp, and UV transmittance used in the calculation. If effluent discharge has received less than the minimum UV dose and is not diverted from discharging to Dredger Cut, report the duration and dose calculation variables associated with each incident.

X. REPORTING REQUIREMENTS

A. General Monitoring and Reporting Requirements

1. The Discharger shall comply with all Standard Provisions (Attachment D) related to monitoring, reporting, and recordkeeping.

2. Upon written request of the Central Valley Water Board, the Discharger shall submit a summary monitoring report. The report shall contain both tabular and graphical summaries of the monitoring data obtained during the previous year(s).

3. Compliance Time Schedules. For compliance time schedules included in the Order, the Discharger shall submit to the Central Valley Water Board, on or before each compliance due date, the specified document or a written report detailing compliance or noncompliance with the specific date and task. If noncompliance is reported, the Discharger shall state the reasons for noncompliance and include an estimate of the date when the Discharger will be in compliance. The Discharger shall notify the Central Valley Water Board by letter when it returns to compliance with the compliance time schedule.

4. The Discharger shall report to the Central Valley Water Board any toxic chemical release data it reports to the State Emergency Response Commission within 15 days of reporting the data to the Commission pursuant to section 313 of the "Emergency Planning and Community Right to Know Act" of 1986.

B. Self Monitoring Reports (SMRs)

1. The Discharger shall continue to submit eSMRs using the State Water Board's CIWQS Program Web site (http:www.waterboards.ca.gov/ciwqs/index.html). The Discharger shall maintain sufficient staffing and resources to ensure it submits eSMRs during the effective duration of this Order. This includes provision of training and supervision of individuals (e.g., Discharger personnel or consultant) on how to prepare and submit eSMRs.

The Discharger shall attach a cover letter to the eSMR. The information contained in the cover letter shall clearly identify violations of the WDRs; discuss corrective actions taken or planned; and the proposed time schedule for corrective actions. Identified violations must include a description of the requirement that was violated and a description of the violation.

2. Monitoring periods and reporting for all required monitoring shall be completed according to the following schedule:

Table E-8. Monitoring Periods and Reporting Schedule

Sampling Frequency	Monitoring Period Begins On…	Monitoring Period	SMR Due Date
Continuous	Permit effective date	All	Submit with monthly SMR
1/Hour	Permit effective date	Hourly	Submit with monthly SMR
1/Day	Permit effective date	(Midnight through 11:59 PM) or any 24-hour period that reasonably represents a calendar day for purposes of sampling.	Submit with monthly SMR
1/Week	Permit effective date	Sunday through Saturday	Submit with monthly SMR
1/Month	Permit effective date	First day of calendar month through last day of calendar month	First day of second calendar month following month of sampling
1/Quarter	Permit effective date	1 January through 31 March 1 April through 30 June 1 July through 30 September 1 October through 31 December	1 May 1 August 1 November 1 February
1/Year	Permit effective date	1 January through 31 December	1 February

3. **Reporting Protocols.** The Discharger shall report with each sample result the applicable reported Reporting Level (RL) and the current Method Detection Limit (MDL), as determined by the procedure in 40 CFR Part 136.

   The Discharger shall report the results of analytical determinations for the presence of chemical constituents in a sample using the following reporting protocols:

   a. Sample results greater than or equal to the RL shall be reported as measured by the laboratory (i.e., the measured chemical concentration in the sample).

   b. Sample results less than the RL, but greater than or equal to the laboratory's MDL, shall be reported as "Detected, but Not Quantified," or DNQ. The estimated chemical concentration of the sample shall also be reported.

   For the purposes of data collection, the laboratory shall write the estimated chemical concentration next to DNQ as well as the words "Estimated Concentration" (may be shortened to "Est. Conc."). The laboratory may, if such information is available, include numerical estimates of the data quality for the reported result. Numerical estimates of data quality may be percent accuracy (+ a percentage of the reported value), numerical ranges (low to high), or any other means considered appropriate by the laboratory.

   c. Sample results less than the laboratory's MDL shall be reported as "Not Detected," or ND.

d. Dischargers are to instruct laboratories to establish calibration standards so that the Minimum Level (ML) value (or its equivalent if there is differential treatment of samples relative to calibration standards) is the lowest calibration standard. At no time is the Discharger to use analytical data derived from extrapolation beyond the lowest point of the calibration curve.

4. **Multiple Sample Data.** When determining compliance with an AMEL, AWEL, or MDEL for priority pollutants and more than one sample result is available, the Discharger shall compute the arithmetic mean unless the data set contains one or more reported determinations of "Detected, but Not Quantified" (DNQ) or "Not Detected" (ND). In those cases, the Discharger shall compute the median in place of the arithmetic mean in accordance with the following procedure:

   a. The data set shall be ranked from low to high, ranking the reported ND determinations lowest, DNQ determinations next, followed by quantified values (if any). The order of the individual ND or DNQ determinations is unimportant.

   b. The median value of the data set shall be determined. If the data set has an odd number of data points, then the median is the middle value. If the data set has an even number of data points, then the median is the average of the two values around the middle unless one or both of the points are ND or DNQ, in which case the median value shall be the lower of the two data points where DNQ is lower than a value and ND is lower than DNQ.

5. **Reporting Requirements.** In reporting the monitoring data, the Discharger shall arrange the data in tabular form so that the date, the constituents, and the concentrations are readily discernible.

   a. The data shall be summarized to clearly illustrate whether the facility is operating in compliance with interim and/or final effluent limitations or with other waste discharge requirements (e.g., discharge specifications, receiving water limitations, special provisions, etc.).

   a. Reports must clearly show when discharging to EFF-001 or other permitted discharge locations. Reports must show the date and time that the discharge started and stopped at each location.

   b. The highest daily maximum for the month and monthly and weekly averages shall be determined and recorded as needed to demonstrate compliance.

6. **Calculation Requirements**. The following shall be calculated and reported in the SMRs:

   a. **Annual Average Limitations**. For constituents with effluent limitations specified as "annual average" (electrical conductivity) the Discharger shall report the annual average in the February SMR. The annual average shall be calculated as the average of the samples gathered for the calendar year.

b. Mass Loading Limitations. For BOD_5, TSS, and ammonia, the Discharger shall calculate and report the mass loading (lbs/day) in the SMRs. The mass loading shall be calculated as follows:

Mass Loading (lbs/day) = Flow (MGD) x Concentration (mg/L) x 8.34

When calculating daily mass loading, the daily average flow and constituent concentration shall be used. For weekly average mass loading, the weekly average flow and constituent concentration shall be used. For monthly average mass loading, the monthly average flow and constituent concentration shall be used.

c. Removal Efficiency (BOD_5 and TSS). The Discharger shall calculate and report the percent removal of BOD_5 and TSS in the SMRs. The percent removal shall be calculated as specified in Section VII.A. of the Limitations and Discharge Requirements.

d. Total Coliform Organisms Effluent Limitations. The Discharger shall calculate and report the 7-day median of total coliform organisms for the effluent. The 7-day median of total coliform organisms shall be calculated as specified in Section VII.C. of the Limitations and Discharge Requirements.

e. Turbidity Receiving Water Limitations. Compliance with the turbidity receiving water limitations shall be determined based on the effluent turbidity.

f. Temperature Receiving Water Limitations. Compliance with the Receiving Water Limitations shall be determined at RSW-001.

g. Total Mercury Mass Loading Interim Effluent Limitations. The procedures for calculation mass loadings are as follows:

1. The total pollutant mass load for each individual calendar month shall be determined using an average of all concentration data collected that month and the corresponding total monthly flow. All effluent monitoring data collected under the monitoring and reporting program, pretreatment program, and any special studies shall be used for these calculations. The total annual mass loading shall be the sum of the individual months.

2. In calculating compliance, the Discharger shall count all non-detect measures at one-half of the detection level. If compliance with the effluent limitation is not attained due to the non-detect contribution, the Discharger shall improve and implement available analytical capabilities and compliance shall be evaluated with consideration of the detection limits.

h. Average Dry Weather Flow Effluent Limitations. The average dry weather discharge flow shall be determined annually and based on the average daily flow over three consecutive dry weather months (e.g. July, August and

September) as measured at INF-001. The Discharger shall report the average dry weather discharge flow in the December SMR.

i. Chlorpyrifos and Diazinon Effluent Limitations. The procedures for calculating mass loadings are as follows:

i. Average Monthly Effluent Limit

$$S_{AMEL} = \frac{C_{D\text{-}avg}}{0.08} + \frac{C_{C\text{-}avg}}{0.012} \leq 1.0$$

$C_{D\text{-}avg}$ = average monthly diazinon effluent concentration in µg/L
$C_{C\text{-}avg}$ = average monthly chlorpyrifos effluent concentration in µg/L

ii. Maximum Daily Effluent Limit

$$S_{MDEL} = \frac{C_{D\text{-}max}}{0.16} + \frac{C_{C\text{-}max}}{0.025} \leq 1.0$$

$C_{D\text{-}max}$ = maximum daily diazinon effluent concentration in µg/L
$C_{C\text{-}max}$ = maximum daily chlorpyrifos effluent concentration in µg/L

Analytical results that are reported as "non-detectable" concentrations to be considered to be zero in the above calculations.

C. Discharge Monitoring Reports (DMRs)

1. As described in section X.B.1 above, at any time during the term of this permit, the State Water Board or Central Valley Water Board may notify the Discharger to electronically submit SMRs that will satisfy federal requirements for submittal of Discharge Monitoring Reports (DMRs). Until such notification is given, the Discharger shall submit DMRs in accordance with the requirements described below.

2. DMRs must be signed and certified as required by the standard provisions (Attachment D). The Discharger shall submit the original DMR and one copy of the DMR to the address listed below:

STANDARD MAIL	FEDEX/UPS/ OTHER PRIVATE CARRIERS
State Water Resources Control Board Division of Water Quality c/o DMR Processing Center PO Box 100 Sacramento, CA 95812-1000	State Water Resources Control Board Division of Water Quality c/o DMR Processing Center 1001 I Street, 15th Floor Sacramento, CA 95814

3. All discharge monitoring results must be reported on the official USEPA pre-printed DMR forms (EPA Form 3320-1). Forms that are self-generated will not be accepted unless they follow the exact same format of EPA Form 3320-1.

D. Other Reports

1. **Special Study Reports and Progress Reports.** As specified in the compliance time schedules required in the Special Provisions contained in section VI of the Order, special study and progress reports shall be submitted in accordance with the following reporting requirements. At minimum, the progress reports shall include a discussion of the status of final compliance, whether the Discharger is on schedule to meet the final compliance date, and the remaining tasks to meet the final compliance date.

Table E-9. Reporting Requirements for Special Provisions Reports

Special Provision	Reporting Requirements
Methylmercury Compliance Schedule Annual Progress Reports (Special Provisions VI.C.7.a.)	**20 October 2014** **20 October 2015** **20 October 2016** **20 October 2017**

2. The Discharger shall report the results of any special studies, acute and chronic toxicity testing and TRE/TIE, PMP, and Pollution Prevention Plan required by Special Provisions VI.C.2.a. of this Order with the first monthly SMR scheduled to be submitted on or immediately following the Discharger's receipt of the reports from the laboratory. The Discharger shall report the progress in satisfaction of compliance schedule dates specified in the Special Provision at section VI.C.7 of this Order. The Discharger shall submit these reports with the first monthly SMR scheduled to be submitted on or immediately following the report due date.

3. Within 60 days of permit adoption, the Discharger shall submit a report outlining reporting levels (RLs), method detection limits, and analytical methods for approval. The Discharger shall comply with the monitoring and reporting requirements for CTR constituents as outlined in section 2.3 and 2.4 of the SIP. The maximum required reporting levels for priority pollutant constituents shall be based on the Minimum Levels (MLs) contained in Appendix 4 of the SIP, determined in accordance with Section 2.4.2 and Section 2.4.3 of the SIP. In accordance with Section 2.4.2 of the SIP, when there is more than one ML value for a given substance, the Central Valley Water Board shall include as RLs, in the permit, all ML values, and their associated analytical methods, listed in Appendix 4 that are below the calculated effluent limitation. The Discharger may select any one of those cited analytical methods for compliance determination. If no ML value is below the effluent limitation, then the Central Valley Water Board shall select as the RL, the lowest ML value, and its associated analytical method, listed in Appendix 4 for inclusion in the permit. Table I-1 (Attachment I) provides required maximum reporting levels in accordance with the SIP.

4. **Annual Operations Report.** By 30 January of each year, the Discharger shall submit a written report to the Executive Officer containing the following:

    a. The names, certificate grades, and general responsibilities of all persons employed at the Facility.

    b. The names and telephone numbers of persons to contact regarding the plant for emergency and routine situations.

    c. A statement certifying when the flow meter(s) and other monitoring instruments and devices were last calibrated, including identification of who performed the calibration.

    d. A statement certifying whether the current operation and maintenance manual, and contingency plan, reflect the wastewater treatment plant as currently constructed and operated, and the dates when these documents were last revised and last reviewed for adequacy.

    e. The Discharger may also be requested to submit an annual report to the Central Valley Water Board with both tabular and graphical summaries of the monitoring data obtained during the previous year. Any such request shall be made in writing. The report shall discuss the compliance record. If violations have occurred, the report shall also discuss the corrective actions taken and planned to bring the discharge into full compliance with the waste discharge requirements.

5. **Annual Pretreatment Reporting Requirements.** The Discharger shall submit annually a report to the Central Valley Water Board, with copies to USEPA Region 9 and the State Water Board, describing the Discharger's pretreatment activities over the previous 12 months (1 January through 31 December). In the event that the Discharger is not in compliance with any conditions or requirements of this Order, including noncompliance with pretreatment audit/compliance inspection requirements, then the Discharger shall also include the reasons for noncompliance and state how and when the Discharger shall comply with such conditions and requirements.

    An annual report shall be submitted by **28 February** and include at least the following items:

    a. A summary of analytical results from representative, flow proportioned, 24-hour composite sampling of the POTW's influent and effluent for those pollutants USEPA has identified under section 307(a) of the CWA which are known or suspected to be discharged by nondomestic users. This will consist of an annual full priority pollutant scan. The Discharger is not required to sample and analyze for asbestos. The Discharger shall submit the results of the annual priority pollutant scan electronically to the Central Valley Water Board using the State Water Board's CIWQS Program Website.

Sludge shall be sampled during the same 24-hour period and analyzed for the same pollutants as the influent and effluent sampling and analysis. The sludge analyzed shall be a composite sample of a minimum of 12 discrete samples taken at equal time intervals over the 24-hour period. Wastewater and sludge sampling and analysis shall be performed at least annually. The Discharger shall also provide any influent, effluent or sludge monitoring data for nonpriority pollutants which may be causing or contributing to Interference, Pass-Through or adversely impacting sludge quality. Sampling and analysis shall be performed in accordance with the techniques prescribed in 40 CFR Part 136 and amendments thereto.

b. A discussion of Upset, Interference, or Pass-Through incidents, if any, at the treatment plant, which the Discharger knows or suspects were caused by nondomestic users of the POTW. The discussion shall include the reasons why the incidents occurred, the corrective actions taken and, if known, the name and address of, the nondomestic user(s) responsible. The discussion shall also include a review of the applicable pollutant limitations to determine whether any additional limitations, or changes to existing requirements, may be necessary to prevent Pass-Through, Interference, or noncompliance with sludge disposal requirements.

c. The cumulative number of nondomestic users that the Discharger has notified regarding Baseline Monitoring Reports and the cumulative number of nondomestic user responses.

d. An updated list of the Discharger's significant industrial users (SIUs) including their names and addresses, or a list of deletions, additions and SIU name changes keyed to a previously submitted list. The Discharger shall provide a brief explanation for each change. The list shall identify the SIUs subject to federal categorical standards by specifying which set(s) of standards are applicable to each SIU. The list shall indicate which SIUs, or specific pollutants from each industry, are subject to local limitations. Local limitations that are more stringent than the federal categorical standards shall also be identified.

e. The Discharger shall characterize the compliance status through the year of record of each SIU by employing the following descriptions:

i. complied with baseline monitoring report requirements (where applicable);

ii. consistently achieved compliance;

iii. inconsistently achieved compliance;

iv. significantly violated applicable pretreatment requirements as defined by 40 CFR 403.8(f)(2)(vii);

v. complied with schedule to achieve compliance (include the date final compliance is required);

vi. did not achieve compliance and not on a compliance schedule; and

vii. compliance status unknown.

f. A report describing the compliance status of each SIU characterized by the descriptions in items iii through vii above shall be submitted for each calendar quarter by the **first day of the second month following the end of the quarter**. The report shall identify the specific compliance status of each such SIU and shall also identify the compliance status of the POTW with regards to audit/pretreatment compliance inspection requirements. If none of the aforementioned conditions exist, at a minimum, a letter indicating that all industries are in compliance and no violations or changes to the pretreatment program have occurred during the quarter must be submitted. The information required in the fourth quarter report shall be included as part of the annual report due every **28 February**. This quarterly reporting requirement shall commence upon issuance of this Order.

g. A summary of the inspection and sampling activities conducted by the Discharger during the past year to gather information and data regarding the SIUs. The summary shall include:

i. The names and addresses of the SIUs subjected to surveillance and an explanation of whether they were inspected, sampled, or both and the frequency of these activities at each user; and

ii. The conclusions or results from the inspection or sampling of each industrial user.

h. The Discharger shall characterize the compliance status of each SIU by providing a list or table which includes the following information:

i. Name of the SIU;

ii. Category, if subject to federal categorical standards;

iii. The type of wastewater treatment or control processes in place;

iv. The number of samples taken by the POTW during the year;

v. The number of samples taken by the SIU during the year;

vi. For an SIU subject to discharge requirements for total toxic organics, whether all required certifications were provided;

vii. A list of the standards violated during the year. Identify whether the violations were for categorical standards or local limits;

viii. Whether the facility is in significant noncompliance (SNC) as defined at 40 CFR 403.8(f)(2)(viii) at any time during the year; and

ix. A summary of enforcement or other actions taken during the year to return the SIU to compliance. Describe the type of action (e.g., warning letters or notices of violation, administrative orders, civil actions, and criminal actions), final compliance date, and the amount of fines and penalties collected, if any. Describe any proposed actions for bringing the SIU into compliance;

x. Restriction of flow to the POTW.

xi. Disconnection from discharge to the POTW.

i. A brief description of any programs the POTW implements to reduce pollutants from nondomestic users that are not classified as SIUs;

j. A brief description of any significant changes in operating the pretreatment program which differ from the previous year including, but not limited to, changes concerning the program's administrative structure, local limits, monitoring program or monitoring frequencies, legal authority, enforcement policy, funding levels, or staffing levels;

k. A summary of the annual pretreatment budget, including the cost of pretreatment program functions and equipment purchases; and

l. A summary of activities to involve and inform the public of the program including a copy of the newspaper notice, if any, required under 40 CFR 403.8(f)(2)(viii).

Duplicate signed copies of these Pretreatment Program reports shall be submitted to the Central Valley Water Board and the:

State Water Resources Control Board
Division of Water Quality
1001 I Street or P.O. Box 100
Sacramento, CA 95812

and the

Regional Administrator
U.S. Environmental Protection Agency WTR-5
75 Hawthorne Street
San Francisco, CA 94105

ATTACHMENT F – FACT SHEET

Contents

I. PERMIT INFORMATION F-4
II. FACILITY DESCRIPTION F-5
A. DESCRIPTION OF WASTEWATER AND BIOSOLIDS TREATMENT AND CONTROLS ... F-5
B. DISCHARGE POINTS AND RECEIVING WATERS F-6
C. SUMMARY OF EXISTING REQUIREMENTS AND SELF-MONITORING REPORT (SMR) DATA F-6
D. COMPLIANCE SUMMARY F-7
E. PLANNED CHANGES F-7
III. APPLICABLE PLANS, POLICIES, AND REGULATIONS F-7
A. LEGAL AUTHORITIES F-7
B. CALIFORNIA ENVIRONMENTAL QUALITY ACT (CEQA) F-8
C. STATE AND FEDERAL LAWS, REGULATIONS, POLICIES, AND PLANS F-8
D. IMPAIRED WATER BODIES ON CWA 303(D) LIST F-9
E. OTHER PLANS, POLICES AND REGULATIONS F-10
IV. RATIONALE FOR EFFLUENT LIMITATIONS AND DISCHARGE SPECIFICATIONS F-10
A. DISCHARGE PROHIBITIONS F-12
B. TECHNOLOGY-BASED EFFLUENT LIMITATIONS F-12
1. SCOPE AND AUTHORITY F-12
2. APPLICABLE TECHNOLOGY-BASED EFFLUENT LIMITATIONS F-13
C. WATER QUALITY-BASED EFFLUENT LIMITATIONS (WQBELS) ..... **Error! Bookmark not defined.**
1. SCOPE AND AUTHORITY F-14
2. APPLICABLE BENEFICIAL USES AND WATER QUALITY CRITERIA AND OBJECTIVES F-15
3. DETERMINING THE NEED FOR WQBELS F-28
4. WQBEL CALCULATIONS F-52
5. WHOLE EFFLUENT TOXICITY (WET) F-54
D. FINAL EFFLUENT LIMITATION CONSIDERATIONS F-57
1. MASS-BASED EFFLUENT LIMITATIONS F-57
2. AVERAGING PERIODS FOR EFFLUENT LIMITATIONS F-57
3. SATISFACTION OF ANTI-BACKSLIDING REQUIREMENTS F-58
4. SATISFACTION OF ANTIDEGRADATION POLICIES F-60
5. STRINGENCY OF REQUIREMENTS FOR INDIVIDUAL POLLUTANTS F-61
E. INTERIM EFFLUENT LIMITATIONS F-62
F. LAND DISCHARGE SPECIFICATIONS F-64
G. RECLAMATION SPECIFICATIONS F-64
V. RATIONALE FOR RECEIVING WATER LIMITATIONS F-64
A. SURFACE WATER F-65
B. GROUNDWATER F-66
VI. RATIONALE FOR MONITORING AND REPORTING REQUIREMENTS F-67
A. INFLUENT MONITORING F-67
B. EFFLUENT MONITORING F-67
C. WHOLE EFFLUENT TOXICITY TESTING REQUIREMENTS F-68
D. RECEIVING WATER MONITORING F-69
1. SURFACE WATER F-69
2. GROUNDWATER F-69
E. OTHER MONITORING REQUIREMENTS F-69

VII. RATIONALE FOR PROVISIONS F-70
A. STANDARD PROVISIONS F-70
B. SPECIAL PROVISIONS F-70
1. REOPENER PROVISIONS F-70
2. SPECIAL STUDIES AND ADDITIONAL MONITORING REQUIREMENTS F-71
3. BEST MANAGEMENT PRACTICES AND POLLUTION PREVENTION F-755
4. CONSTRUCTION, OPERATION, AND MAINTENANCE SPECIFICATIONS F-77
5. SPECIAL PROVISIONS FOR MUNICIPAL FACILITIES (POTWS ONLY) F-77
6. OTHER SPECIAL PROVISIONS F-78
7. COMPLIANCE SCHEDULES F-78
VIII. PUBLIC PARTICIPATION F-81
A. NOTIFICATION OF INTERESTED PARTIES F-81
B. WRITTEN COMMENTS F-82
C. PUBLIC HEARING F-82
D. RECONSIDERATION OF WASTE DISCHARGE REQUIREMENTS F-82
E. INFORMATION AND COPYING F-83
F. REGISTER OF INTERESTED PERSONS F-83
G. ADDITIONAL INFORMATION F-83

Tables

Table F-1. Facility Information F-3
Table F-2. Historic Effluent Limitations and Monitoring Data F-5
Table F-3. 303(d) List for the Sacramento-San Joaquin Delta Waterways, Central Portion F-9
Table F-4. Summary of Technology-based Effluent Limitations F-13
Table F-5. Basin Plan Beneficial Uses F-15
Table F-6. Copper ECA Evaluation F-21
Table F-7a. Cadmium ECA($_{CHRONIC}$) Evaluation F-21
Table F-7b. Chromium III($_{CHRONIC}$) ECA Evaluation F-22
Table F-7c. Nickel($_{CHRONIC}$) ECA Evaluation F-23
Table F-7d. Zinc$_{(CHRONIC)}$ ECA Evaluation F-23
Table F-8a. Lead$_{(CHRONIC)}$ ECA Evaluation F-25
Table F-8b. Cadmium$_{(CHRONIC)}$ ECA Evaluation F-26
Table F-8c. Silver$_{ACUTE)}$ ECA Evaluation F-27
Table F-9. Summary of ECA Evaluations for CTR Hardness-dependent Metals F-28
Table F-10. Summary of pH and Hardness at EFF-001 and RSW-005 ..... F-30
Table F-11. Central Valley Region Site-Specific Toxicity Data F-31
Table F-12: Effluent Dioxin (2,3,7,8-TCDD) Results F-34
Table F-13: Effluent Endrin Results F-35
Table F-14. Salinity Water Quality Criteria/Objectives F-50
Table F-15. Summary of Water Quality-Based Effluent Limitations F-53
Table F-16: Whole Effluent Chronic Toxicity Testing Results F-55
Table F-17. Summary of Final Effluent Limitations F-61
Table F-18. Interim Effluent Limitation Calculation Summary F-63

ATTACHMENT F – FACT SHEET

As described in the Findings in section II of this Order, this Fact Sheet includes the legal requirements and technical rationale that serve as the basis for the requirements of this Order.

This Order has been prepared under a standardized format to accommodate a broad range of discharge requirements for Dischargers in California. Only those sections or subsections of this Order that are specifically identified as "not applicable" have been determined not to apply to this Discharger. Sections or subsections of this Order not specifically identified as "not applicable" are fully applicable to this Discharger.

I. PERMIT INFORMATION

The following table summarizes administrative information related to the Facility.

Table F-1. Facility Information

WDID	5B390103002
Discharger	City of Lodi
Name of Facility	White Slough Water Pollution Control Facility, Lodi
Facility Address	12751 North Thornton Road
	Lodi, CA 95242
	San Joaquin County
Facility Contact, Title and Phone	Mr. Larry Parlin, Deputy Public Works Director (209) 333-6740
Authorized Person to Sign and Submit Reports	Mr. Larry Parlin, Deputy Public Works Director (209) 333-6740
Mailing Address	1331 South Ham Lane, Lodi, CA 95242
Billing Address	221 West Pine Street, Lodi, CA 95240
Type of Facility	Publicly Owned Treatment Works (POTW)
Major or Minor Facility	Major
Threat to Water Quality	Category 1
Complexity	Category A
Pretreatment Program	Y
Reclamation Requirements	Producer
Facility Permitted Flow	8.5 mgd (average dry weather flow)
Facility Design Flow	8.5 mgd (average dry weather flow)
Watershed	Sacramento-San Joaquin Delta
Receiving Water	Dredger Cut
Receiving Water Type	5B390103002

A. City of Lodi (hereinafter Discharger) is the owner and operator of White Slough Water Pollution Control Facility (hereinafter Facility), a POTW.

For the purposes of this Order, references to the "discharger" or "permittee" in applicable federal and state laws, regulations, plans, or policy are held to be equivalent to references to the Discharger herein.

B. The Facility discharges wastewater to Dredger Cut, a water of the United States, and was regulated by Order R5-2007-0113 which was adopted on 14 September 2007 and expired on 1 September 2012. The terms and conditions of Order R5-2007-0113 were automatically continued and remained in effect until new Waste Discharge Requirements (WDRs) and National Pollutant Discharge Elimination System (NPDES) permit are adopted pursuant to this Order.

C. Order R5-2007-0113 regulated discharges to Dredger Cut, a water of the United States, and part of the Sacramento-San Joaquin Delta, and also regulated discharges to land. The Facility seasonally discharges to land and provides reclaimed water to the Northern California Power Agency (NCPA) and San Joaquin County (SJCo) Vector Control District. The Discharger filed a report of waste discharge and submitted an application for renewal of its Waste Discharge Requirements (WDRs) and National Pollutant Discharge Elimination System (NPDES) permit in February 2012. Supplemental information was requested received on 2 July 2012. A site visit was conducted on 7 February 2013, to observe operations and collect additional data to develop permit limitations and conditions.

The Discharger also requested the issuance of separate permits to regulate the land and surface water discharges. The application was deemed complete on 9 October 2012. Due to the complexities of the discharges to land for this Facility, separate permits have been issued for the surface water and land discharges.

D. This Order is an NPDES Permit and regulates only the treated wastewater discharge to Dredger Cut within the legal Delta. Order R5-2007-0113 was amended by Order R5-2013-XXXX on X October 2013 to remove all NPDES permitting requirements and now separate from this Order, Waste Discharge Requirements Order R5-2007-0113-01 regulates reclamation and discharges to land for the protection of groundwater (i.e., reclamation at the power plant and mosquito ponds, and land application of industrial wastes, secondary treated domestic wastewater, agricultural runoff, stormwater, and biosolids).

II. FACILITY DESCRIPTION

The Discharger owns and operates two separate wastewater collection systems, one to collect municipal wastewater and another to collect industrial wastewater. The municipal wastewater collection system has 23,000 service laterals and consists of 178 miles of collection mains, 2,880 manholes, 7 lift stations, and 5 miles of trunk line delivering wastewater to the Facility for treatment and disposal. Dischargers to the domestic trunk line include a present population of approximately 63,500, businesses, and some industries within the City of Lodi. Flows from the San Joaquin Flag City Service Area are included in the City's municipal flows.

A. Description of Wastewater and Biosolids Treatment or Controls

The Facility's design average dry weather flow capacity is 8.5 mgd with average annual flows for 2011 at 5.3 mgd. The treatment system at the Facility consists of

headworks with influent screens; mechanical grit removal; primary sedimentation; biological treatment by activated sludge, including nitrification and denitrification; secondary sedimentation; tertiary treatment with cloth media filtration; and ultraviolet light disinfection. Sludge is anaerobically digested and stored in the Facility's lined sludge stabilization pond. The stabilized solids are dewatered by a rotary press. The dewatered solids are applied to the Agricultural Fields and regulated by Order R5-2007-0113-01.

In general, during the months of September through June, the municipal wastewater is treated to tertiary standards and disinfected (UV disinfection) prior to discharge from EFF-001 (see table on cover page) to Dredger Cut, a water of the United States, and within the Sacramento-San Joaquin Delta.

B. Discharge Points and Receiving Waters

A. The Facility is located in Section 23, T3N, R5E, MDB&M, as shown in Attachment B, a part of this Order.

B. During the non-growing season (generally late November through mid-April), the Facility discharges tertiary treated municipal wastewater at Discharge Point 001, located 1.5 miles southwest of the Facility at Dredger Cut, a water of the United States near the confluence of Bishop Cut and White Slough at a point latitude 38°, 5', 35" N and longitude 121°, 22', 48" W. Dredger Cut is a dead end slough that does not receive up stream flow except for stormwater or agricultural runoff from the surrounding area.

C. The Facility and Discharge Point 001 are within the 1992 Legal Boundary of the Sacramento-San Joaquin Delta Watershed Management Area, Section 12220 of the California Water Code.

C. Summary of Existing Requirements and Self-Monitoring Report (SMR) Data

NPDES Effluent limitations contained in Order R5-2007-0113 for discharges from Discharge Point No. 001 (Monitoring Location EFF-001) and representative monitoring data during the term of Order R5-2007-0113 are as follows:

Table F-2. Historic Effluent Limitations and Monitoring Data

Parameter	Units	Effluent Limitation			Monitoring Data – Tertiary Level Treatment (From 1/1/2009 To 12/31/2011)		
		Average Monthly	Average Weekly	Maximum Daily	Highest Average Monthly Discharge	Highest Average Weekly Discharge	Highest Daily Discharge
BOD[1]	mg/L	10	15	20	8	30	78
TSS	mg/L	10	15	20	8	12	42
Settleable Solids	ml/L	--	--	0.1	--	--	
Temperature	ºF	<= 86 ºF			--	--	82.6
Ph	SU	Minimum: 6.5		Maximum: 8.5	Minimum:6.3		Maximum: 7.6

Parameter	Units	Effluent Limitation			Monitoring Data – Tertiary Level Treatment (From 1/1/2009 To 12/31/2011)		
		Average Monthly	Average Weekly	Maximum Daily	Highest Average Monthly Discharge	Highest Average Weekly Discharge	Highest Daily Discharge
Average Dry Weather Flow	mgd	8.5	--	--		6.4	8.7
Dissolved Oxygen	mg/L	--	Minimum Daily Avg: 5		--	Lowest Daily Avg: 5.3	
Total Coliform Organisms	MPN/ 100ml	--	2.2[2]	23	--	12.5	110
Turbidity	NTU	Daily Average: 2		5	Daily Average: 0.8		8
Aluminum, (total recoverable)	ug/L	66	--	155	47		47
Chlorodibromomethane	ug/L	0.41	--	0.82	<0.31		<0.31
Dichlorobromomethane	ug/L	0.56	--	1.1	<0.25		<0.25
Ammonia (as N)	ug/L	1.3	--	4.3	2.7	--	7
Acute Toxicity	%	1-sample not to fall below 70% and 3-sample median not to fall below 90% survival.			Minimum Single Sample: 80 Minimum 3-sample median: 90		
Electric Conductivity	umho s/cm	780	--		705		750
Manganese	ug/L	--	--	50			29

[1] 5-day, 20ºC biochemical oxygen demand
[2] 7-day median

D. Compliance Summary

The Discharger received three Administrative Civil Liability complaints, R5-2012-0509, R5-2009-0555 and R5-2008-0562. The majority of effluent limitation violations were for total coliform organisms with a few effluent limitation violations for ammonia, pH, total suspended solids and one violation for manganese and ammonia.

E. Planned Changes

None

III. APPLICABLE PLANS, POLICIES, AND REGULATIONS

The requirements contained in this Order are based on the applicable plans, policies, and regulations identified in the Findings in section II of this Order. The applicable plans, policies, and regulations relevant to the discharge include the following:

A. Legal Authorities

This Order is issued pursuant to regulations in the Clean Water Act (CWA) and the California Water Code (Water Code) as specified in the Finding contained at section II.C of this Order.

B. California Environmental Quality Act (CEQA)

This Order meets the requirements of CEQA as specified in the Finding contained at section II.E of this Order.

C. State and Federal Regulations, Policies, and Plans

1. **Water Quality Control Plans.** This Order implements the following water quality control plans as specified in the Finding contained at section II.H of this Order.

    a. *Water Quality Control Plan, Fourth Edition (Revised February 2007), for the Sacramento and San Joaquin River Basins* (Basin Plan)

    b. *Water Quality Control Plan for Control of Temperature in the Coastal and Interstate Water and Enclosed Bays and Estuaries of California* (Thermal Plan)

    c. *Water Quality Control Plan for the San Francisco Bay/Sacramento-San Joaquin Delta Estuary* (Bay-Delta Plan)

2. **National Toxics Rule (NTR) and California Toxics Rule (CTR).** This Order implements the NTR and CTR as specified in the Finding contained at section II.I of this Order.

3. **State Implementation Policy (SIP).** This Order implements the SIP as specified in the Finding contained at section II.J of this Order.

4. **Antidegradation Policy.** As specified in the Finding contained at section II.M of this Order and as discussed in detail in the Fact Sheet (Attachment F, Section IV.D.4.), the discharge is consistent with the antidegradation provisions of 40 CFR section 131.12 and State Water Resources Control Board (State Water Board) Resolution 68-16.

5. **Anti-Backsliding Requirements.** This Order is consistent with anti-backsliding policies as specified in the Finding contained at section II.N of this Order. Compliance with the anti-backsliding requirements is discussed in the Fact Sheet (Attachment F, Section IV.D.3).

6. **Emergency Planning and Community Right to Know Act**

    Section 13263.6(a) of the Water Code, requires that "*the Regional Water Board shall prescribe effluent limitations as part of the waste discharge requirements of a POTW for all substances that the most recent toxic chemical release data reported to the state emergency response commission pursuant to Section 313 of the Emergency Planning and Community Right to Know Act of 1986 (42 U.S.C. Sec. 11023) (EPCRA) indicate as discharged into the POTW, for which the State Water Board or the Regional Water Board has established numeric water quality objectives, and has determined that the discharge is or may be discharged at a level which will cause,*

have the reasonable potential to cause, or contribute to, an excursion above any numeric water quality objective".

The Central Valley Water Board has adopted numeric water quality objectives in the Basin Plan for the following constituents: arsenic, barium, copper, cyanide, iron, manganese, silver and zinc. As detailed elsewhere in this Permit, available effluent quality data indicate that none of these constituents have a reasonable potential to cause or contribute to an excursion above any numeric water quality objectives included within the Basin Plan or in any State Water Board plan, so no effluent limitations are included in this permit pursuant to Water Code section 13263.6(a),

The most recent toxic chemical data report does not indicate any reportable off-site releases or discharges to the collection system for this Facility. Therefore, a reasonable potential analysis based on information from EPCRA cannot be conducted. Based on information from EPCRA, there is no reasonable potential to cause or contribute to an excursion above any numeric water quality objectives included within the Basin Plan or in any State Water Board plan, so no effluent limitations are included in this permit pursuant to Water Code section 13263.6(a).

However, as detailed elsewhere in this Order, available effluent data indicate that there are constituents present in the effluent that have a reasonable potential to cause or contribute to exceedances of water quality standards and require inclusion of effluent limitations based on federal and state laws and regulations.

7. Storm Water Requirements

USEPA promulgated federal regulations for storm water on 16 November 1990 in 40 CFR Parts 122, 123, and 124. The NPDES Industrial Storm Water Program regulates storm water discharges from wastewater treatment facilities. Wastewater treatment plants are applicable industries under the storm water program and are obligated to comply with the federal regulations.

8. Endangered Species Act. This Order is consistent with the Endangered Species Act as specified in the Finding contained at section II.O of this Order.

D. Impaired Water Bodies on CWA 303(d) List

1. Under section 303(d) of the 1972 CWA, states, territories and authorized tribes are required to develop lists of water quality limited segments. The waters on these lists do not meet water quality standards, even after point sources of pollution have installed the minimum required levels of pollution control technology. On 11 October 2011 USEPA gave final approval to California's 2010 section 303(d) List of Water Quality Limited Segments. The Basin Plan references this list of Water Quality Limited Segments (WQLSs), which are defined as "…*those sections of lakes, streams, rivers or other fresh water bodies where water quality does not meet (or is not expected to meet) water quality standards even after the application of appropriate limitations for point sources* (40 CFR Part 130, et seq.)." The Basin Plan also states, "*Additional treatment beyond minimum federal standards will be*

imposed on dischargers to [WQLSs]. Dischargers will be assigned or allocated a maximum allowable load of critical pollutants so that water quality objectives can be met in the segment." The listing for the Sacramento-San Joaquin Delta (eastern portion) which includes Dredger Cut includes: chlorpryrifos, dichlorodiphenyltrichloroethane (DDT), diazinon, Group A pesticides, invasive species, mercury and unknown toxicity.

2. **Total Maximum Daily Loads (TMDLs).** USEPA requires the Central Valley Water Board to develop TMDLs for each 303(d) listed pollutant and water body combination. The status of each TMDL and applicable effluent limitations are discussed in Table F-3, below, for each specific pollutant.

Table F-3. 303(d) List for the Sacramento-San Joaquin Delta Waterways, Central Portion

Pollutant	Potential Sources	Proposed TMDL Completion
Chlorpyrifos	Agriculture	Approved 10 October 2007
DDT (Dichlorodiphenyltrichloroethane)	Agriculture	(1)
Diazinon	Agriculture	Approved 10 October 2007
Invasive Species	Unknown	2019
Organo-chlorine Group A Pesticides	Agriculture	(1)
Mercury	Resource Extraction	Approved 20 October 2011
Unknown Toxicity	Unknown	2019

[1] TMDL completion date will be updated when the next 303(d) list is updated.

3. The 303(d) listings and TMDLs have been considered in the development of the Order. A pollutant-by-pollutant evaluation of each pollutant of concern is described in section IV.C.3. of this Fact Sheet.

E. Other Plans, Policies and Regulations (Not Applicable)

IV. RATIONALE FOR EFFLUENT LIMITATIONS AND DISCHARGE SPECIFICATIONS

Effluent limitations and toxic and pretreatment effluent standards established pursuant to sections 301 (Effluent Limitations), 302 (Water Quality Related Effluent Limitations), 304 (Information and Guidelines), and 307 (Toxic and Pretreatment Effluent Standards) of the CWA and amendments thereto are applicable to the discharge.

The CWA mandates the implementation of effluent limitations that are as stringent as necessary to meet water quality standards established pursuant to state or federal law [33 U.S.C., §1311(b)(1)(C); 40 CFR 122.44(d)(1)]. NPDES permits must incorporate discharge limits necessary to ensure that water quality standards are met. This requirement applies to narrative criteria as well as to criteria specifying maximum amounts of particular pollutants. Pursuant to federal regulations, 40 CFR 122.44(d)(1)(i), NPDES permits must contain limits that control all pollutants that "*are or may be discharged at a level which will cause, have the reasonable potential to cause, or contribute to an excursion above any state water quality standard, including state narrative criteria for water quality*." Federal regulations, 40 CFR 122.44(d)(1)(vi), further provide that "[w]*here a state has not established a water quality criterion for a specific chemical pollutant that is present in an effluent at a concentration that causes, has the reasonable potential to cause, or contributes to an excursion above a narrative criterion within an applicable State water quality standard, the permitting authority must establish effluent limits*."

The CWA requires point source dischargers to control the amount of conventional, non-conventional, and toxic pollutants that are discharged into the waters of the United States. The control of pollutants discharged is established through effluent limitations and other requirements in NPDES permits. There are two principal bases for effluent limitations in the Code of Federal Regulations: 40 CFR 122.44(a) requires that permits include applicable technology-based limitations and standards; and 40 CFR 122.44(d) requires that permits include WQBELs to attain and maintain applicable numeric and narrative water quality criteria to protect the beneficial uses of the receiving water where numeric water quality objectives have not been established. The Basin Plan at page IV-17.00, contains an implementation policy, "*Policy for Application of Water Quality Objectives*", that specifies that the Central Valley Water Board "*will, on a case-by-case basis, adopt numerical limitations in orders which will implement the narrative objectives*." This Policy complies with 40 CFR 122.44(d)(1). With respect to narrative objectives, the Central Valley Water Board must establish effluent limitations using one or more of three specified sources, including: (1) USEPA's published water quality criteria, (2) a proposed state criterion (i.e., water quality objective) or an explicit state policy interpreting its narrative water quality criteria (i.e., the Central Valley Water Board's "*Policy for Application of Water Quality Objectives*")(40 CFR 122.44(d)(1)(vi)(A), (B) or (C)), or (3) an indicator parameter.

The Basin Plan includes numeric site-specific water quality objectives and narrative objectives for toxicity, chemical constituents, discoloration, radionuclides, and tastes and odors. The narrative toxicity objective states: "*All waters shall be maintained free of toxic substances in concentrations that produce detrimental physiological responses in human, plant, animal, or aquatic life*." (Basin Plan at III-8.00) The Basin Plan states that material and relevant information, including numeric criteria, and recommendations from other agencies and scientific literature will be utilized in evaluating compliance with the narrative toxicity objective. The narrative chemical constituents objective states that waters shall not contain chemical constituents in concentrations that adversely affect beneficial uses. At minimum, "…*water designated for use as domestic or municipal supply (MUN) shall not contain concentrations of chemical constituents in excess of the*

maximum contaminant levels (MCLs)" in Title 22 of CCR. The Basin Plan further states that, to protect all beneficial uses, the Central Valley Water Board may apply limits more stringent than MCLs. The narrative tastes and odors objective states: *"Water shall not contain taste- or odor-producing substances in concentrations that impart undesirable tastes or odors to domestic or municipal water supplies or to fish flesh or other edible products of aquatic origin, or that cause nuisance, or otherwise adversely affect beneficial uses*."

A. Discharge Prohibitions

1. Prohibition III.A (No discharge or application of waste other than that described in this Order). This prohibition is based on Water Code section 13260 that requires filing of a report of waste discharge (ROWD) before discharges can occur. The Discharger submitted a ROWD for the discharges described in this Order; therefore, discharges not described in this Order are prohibited.
2. Prohibition III.B (No bypasses or overflow of untreated wastewater, except under the conditions at CFR Part 122.41(m)(4)). As stated in section I.G of Attachment D, Standard Provisions, this Order prohibits bypass from any portion of the treatment facility. Federal regulations, 40 CFR 122.41(m), define "bypass" as the intentional diversion of waste streams from any portion of a treatment facility. This section of the federal regulations, 40 CFR 122.41(m)(4), prohibits bypass unless it is unavoidable to prevent loss of life, personal injury, or severe property damage. In considering the Central Valley Water Board's prohibition of bypasses, the State Water Board adopted a precedential decision, Order No. WQO 2002-0015, which cites the federal regulations, 40 CFR 122.41(m), as allowing bypass only for essential maintenance to assure efficient operation.
3. Prohibition III.C (No controllable condition shall create a nuisance). This prohibition is based on Water Code section 13050 that requires water quality objectives established for the prevention of nuisance within a specific area. The Basin Plan prohibits conditions that create a nuisance
4. Prohibition III.D (No inclusion of pollutant free wastewater shall cause improper operation of the Facility's systems). This prohibition is based on CFR Part 122.41 et seq. that requires the proper design and operation of treatment facilities.

B. Technology-Based Effluent Limitations

1. Scope and Authority

Section 301(b) of the CWA and implementing USEPA permit regulations at 40 CFR 122.44 require that permits include conditions meeting applicable technology-based requirements at a minimum, and any more stringent effluent limitations necessary to meet applicable water quality standards. The discharge authorized by this Order must meet minimum federal technology-based requirements based on Secondary Treatment Standards at 40 CFR Part 133 and/or Best Professional Judgment (BPJ) in accordance with 40 CFR 125.3.

Regulations promulgated in 40 CFR 125.3(a)(1) require technology-based effluent limitations for municipal Dischargers to be placed in NPDES permits based on Secondary Treatment Standards or Equivalent to Secondary Treatment Standards.

The Federal Water Pollution Control Act Amendments of 1972 (PL 92-500) established the minimum performance requirements for POTWs [defined in section 304(d)(1)]. Section 301(b)(1)(B) of that Act requires that such treatment works must, as a minimum, meet effluent limitations based on secondary treatment as defined by the USEPA Administrator.

Based on this statutory requirement, USEPA developed secondary treatment regulations, which are specified in 40 CFR Part 133. These technology-based regulations apply to all municipal wastewater treatment plants and identify the minimum level of effluent quality attainable by secondary treatment in terms of 5-day biochemical oxygen demand (BOD_5), total suspended solids (TSS), and pH.

2. Applicable Technology-Based Effluent Limitations

a. BOD_5 and TSS. Federal regulations, 40 CFR Part 133, establish the minimum weekly and monthly average level of effluent quality attainable by secondary treatment for BOD_5 and TSS. Tertiary treatment is necessary to protect the beneficial uses of the receiving stream and the final effluent limitations for BOD_5 and TSS are based on the technical capability of the tertiary process. BOD_5 is a measure of the amount of oxygen used in the biochemical oxidation of organic matter. The secondary and tertiary treatment standards for BOD_5 and TSS are indicators of the effectiveness of the treatment processes. The principal design parameter for wastewater treatment plants is the daily BOD_5 and TSS loading rates and the corresponding removal rate of the system. In applying 40 CFR Part 133 for weekly and monthly average BOD_5 and TSS limitations, the application of tertiary treatment processes results in the ability to achieve lower levels for BOD_5 and TSS than the secondary standards currently prescribed; the 30-day average BOD_5 and TSS limitations have been revised to 10 mg/L, which is technically based on the capability of a tertiary system. In addition to the average weekly and average monthly effluent limitations, a daily maximum effluent limitation for BOD_5 and TSS is included in the Order to ensure that the treatment works are not organically overloaded and operate in accordance with design capabilities. In addition, 40 CFR 133.102, in describing the minimum level of effluent quality attainable by secondary treatment, states that the 30-day average percent removal shall not be less than 85 percent. If 85 percent removal of BOD_5 and TSS must be achieved by a secondary treatment plant, it must also be achieved by a tertiary (i.e., treatment beyond secondary level) treatment plant. This Order contains a limitation requiring an average of 85 percent removal of BOD_5 and TSS over each calendar month. This Order requires Water Quality Based Effluent Limitations (WQBELs) that are equal to or more stringent than the secondary technology-based treatment described in 40 CFR Part 133. (See section IV.C.3.c of this Attachment for the discussion on Pathogens which includes WQBELs for BOD_5 and TSS.)

b. Flow. The Facility was designed to provide a tertiary level of treatment for up to a design (average dry weather flow) flow of 8.5 mgd. Therefore, this Order contains an average dry weather discharge flow effluent limit of 8.5 mgd.

c. pH. The secondary treatment regulations at 40 CFR Part 133 also require that pH be maintained between 6.0 and 9.0 standard units.

Summary of Technology-based Effluent Limitations
Discharge Point No. 001

Table F-4. Summary of Technology-based Effluent Limitations

Parameter	Units	Effluent Limitations				
		Average Monthly	Average Weekly	Maximum Daily	Instantaneous Minimum	Instantaneous Maximum
BOD 5-day @ 20°C	mg/L	10	15	20		
	lbs/day	709	1064	1418		
Total Suspended Solids	mg/L	10	15	20		
	lbs/day	709	1064	1418		
pH	Standard Units				6.0	9.0
85% Removal of BOD 5-day @20°C and Total Suspended Solids						

C. Water Quality-Based Effluent Limitations (WQBELs)

1. Scope and Authority

Section 301(b) of the CWA and 40 CFR 122.44(d) require that permits include limitations more stringent than applicable federal technology-based requirements where necessary to achieve applicable water quality standards. This Order contains requirements, expressed as a technology equivalence requirement, more stringent than secondary treatment requirements that are necessary to meet applicable water quality standards. The rationale for these requirements, which consist of tertiary treatment or equivalent requirements or other provisions, is discussed in section IV.C.3.c.v. of this Fact Sheet.

40 CFR 122.44(d)(1)(i) mandates that permits include effluent limitations for all pollutants that are or may be discharged at levels that have the reasonable potential to cause or contribute to an exceedance of a water quality standard, including numeric and narrative objectives within a standard. Where reasonable potential has been established for a pollutant, but there is no numeric criterion or objective for the pollutant, WQBELs must be established using: (1) USEPA criteria guidance under CWA section 304(a), supplemented where necessary by other relevant information; (2) an indicator parameter for the pollutant of concern; or (3) a calculated numeric water quality criterion, such as a proposed state criterion or policy interpreting the state's narrative criterion, supplemented with other relevant information, as provided in 40 CFR 122.44(d)(1)(vi).

The process for determining reasonable potential and calculating WQBELs when necessary is intended to protect the designated uses of the receiving water as specified in the Basin Plan, and achieve applicable water quality objectives and criteria that are contained in other state plans and policies, or any applicable water quality criteria contained in the CTR and NTR.

2. Applicable Beneficial Uses and Water Quality Criteria and Objectives

The Basin Plan designates beneficial uses, establishes water quality objectives, and contains implementation programs and policies to achieve those objectives for all waters addressed through the plan. In addition, the Basin Plan implements State Water Board Resolution No. 88-63, which established state policy that all waters, with certain exceptions, should be considered suitable or potentially suitable for municipal or domestic supply.

The Basin Plan on page II-1.00 states: "*Protection and enhancement of existing and potential beneficial uses are primary goals of water quality planning…*" and with respect to disposal of wastewaters states that "...*disposal of wastewaters is [not] a prohibited use of waters of the State; it is merely a use which cannot be satisfied to the detriment of beneficial uses.*" The federal CWA section 101(a)(2), states: "*it is the national goal that wherever attainable, an interim goal of water quality which provides for the protection and propagation of fish, shellfish, and wildlife, and for recreation in and on the water be achieved by July 1, 1983.*" Federal Regulations, developed to implement the requirements of the CWA, create a rebuttable presumption that all waters be designated as fishable and swimmable. Federal Regulations, 40 CFR sections 131.2 and 131.10, require that all waters of the State regulated to protect the beneficial uses of public water supply, protection and propagation of fish, shell fish and wildlife, recreation in and on the water, agricultural, industrial and other purposes including navigation. Section 131.3(e), 40 CFR, defines existing beneficial uses as those uses actually attained after 28 November 1975, whether or not they are included in the water quality standards. Federal Regulation, 40 CFR section 131.10 requires that uses be obtained by implementing effluent limitations, requires that all downstream uses be protected and states that in no case shall a state adopt waste transport or waste assimilation as a beneficial use for any waters of the United States.

a. Receiving Water and Beneficial Uses. Dredger Cut is a tidally influenced dead end slough that is seasonally fed by storm water and agricultural runoff from the surrounding are. Dredger Cut flows to the confluence of Bishop Cut and White Slough, which are within the legal boundaries of the Sacramento-San Joaquin Delta.

Beneficial uses from Table II-1 of the Basin Plan applicable to **the** Sacramento-San Joaquin Delta are as follows:

Table F-5. Basin Plan Beneficial Uses

Discharge Point	Receiving Water Name	Beneficial Use(s)
001	**Sacramento-San Joaquin Delta**	**[Beneficial Uses: Modify as applicable]** Existing uses from Table II-1 of the Basin Plan: Municipal and domestic supply (MUN); Agricultural supply, including irrigation and stock watering (AGR); Industrial process supply (PROC); Industrial service supply (IND); Water contact recreation (REC-1); Non-contact water recreation (REC-2); Warm freshwater habitat (WARM); Cold freshwater habitat (COLD); Migration of aquatic organisms, warm and cold (MIGR); Spawning, reproduction, and/or early development, warm (SPWN); Wildlife habitat (WILD); Navigation (NAV); and Commercial and sportfishing (COMM). Suitable uses from State Water Board Resolution 88-63: Municipal and domestic water supply (MUN).

b. **Effluent and Ambient Background Data.** Unless otherwise stated in section IV.C.3 of this Fact Sheet, the reasonable potential analysis (RPA) was conducted based data from January 2009 through December 2011, which includes effluent and ambient background data submitted in self-monitoring reports (SMRs), the Report of Waste Discharge (ROWD), etc.

c. **Assimilative Capacity/Mixing Zone.** Dredger Cut is a tidally influenced dead end slough with minimal dilution within the vicinity of the discharge. In 1998, the Discharger submitted results of a model that indicated the average dilution is 2:1 over a tidal cycle at a location approximately 300 meters downstream of the discharge (*Water Quality Impact Report, White Slough Water Pollution Control Facility*, Litton, Gary, and Nikaido, Jason). The USEPA allows states to have broad flexibility in designing its mixing zone policies, and provides guidelines and procedures in its Technical Support Document for Water Quality-Based Toxics Control. Based on this document and the Basin Plan, the Central Valley Water Board determined that the available dilution within the vicinity of the discharge is negligible and found that a mixing zone should not be considered. As a result, the Central Valley Water Boards, in Order No. 5-00-031, did not designate any mixing zone within which water quality objectives will not apply.

This Order also does not allow a mixing zone, nor applies dilution credits, because the Discharger did not provide any additional information to determine a mixing zone that will not adversely impact beneficial uses. Furthermore, the Central Valley Water Board finds that dilution credits are not appropriate because the receiving water is a quiescent estuary with negligible dilution within

the vicinity of the discharge. Should the Discharge provide an adequate dilution and mixing zone study this Order may be reopened to allow dilution credits.

d. Conversion Factors. The CTR contains aquatic life criteria for arsenic, cadmium, chromium III, chromium VI, copper, lead, nickel, silver, and zinc which are presented in dissolved concentrations. USEPA recommends conversion factors to translate dissolved concentrations to total concentrations. The default USEPA conversion factors contained in Appendix 3 of the SIP were used to convert the applicable dissolved criteria to total recoverable criteria.

e. Hardness-Dependent CTR Metals Criteria. The *California Toxics Rule* and the *National Toxics Rule* contain water quality criteria for seven metals that vary as a function of hardness. The lower the hardness the lower the water quality criteria. The metals with hardness-dependent criteria include cadmium, copper, chromium III, lead, nickel, silver, and zinc.

This Order has established the criteria for hardness-dependent metals based on the reasonable worst-case ambient hardness as required by the SIP[1], the CTR[2] and State Water Board Order No. WQO 2008-0008 (City of Davis). The SIP and the CTR require the use of "receiving water" or "actual ambient" hardness, respectively, to determine effluent limitations for these metals. (SIP, § 1.2; 40 CFR § 131.38(c)(4)) The CTR does not define whether the term "ambient," as applied in the regulations, necessarily requires the consideration of upstream as opposed to downstream hardness conditions. Therefore, where reliable, representative data are available, the hardness value for calculating criteria can be the downstream receiving water hardness, after mixing with the effluent (Order WQO 2008-0008, p. 11). The Central Valley Water Board thus has considerable discretion in determining ambient hardness (*Id.*, p.10).

As discussed below, scientific literature provides a reliable method for calculating protective hardness-dependent CTR criteria, considering all discharge conditions. This methodology produces hardness-dependent CTR criteria based on the reasonable worst-case downstream ambient hardness that ensure these metals do not cause receiving water toxicity under any downstream receiving water condition. Under this methodology, the Central Valley Water Board considers all hardness conditions that could occur in the ambient downstream receiving water after the effluent has mixed with the water body[3]. This ensures that effluent limitations are fully protective of aquatic life in all areas of the receiving water affected by the discharge under all flow

[1] The SIP does not address how to determine the hardness for application to the equations for the protection of aquatic life when using hardness-dependent metals criteria. It simply states, in Section 1.2, that the criteria shall be properly adjusted for hardness using the hardness of the receiving water.

[2] The CTR requires that, for waters with a hardness of 400 mg/L (as $CaCO_3$), or less, the actual ambient hardness of the surface water must be used. It further requires that the hardness values used must be consistent with the design discharge conditions for design flows and mixing zones.

[3] All effluent discharges will change the ambient downstream metals concentration and hardness. It is not possible to change the metals concentration without also changing the hardness.

conditions, at the fully mixed location, and throughout the water body including at the point of discharge into the water body.

i. **Conducting the Reasonable Potential Analysis (RPA).** The SIP in Section 1.3 states, "The RWQCB shall…determine whether a discharge may: (1) cause, (2) have a reasonable potential to cause, or (3) contribute to an excursion above any applicable priority pollutant criterion or objective." Section 1.3 provides a step-by-step procedure for conducting the RPA. The procedure requires the comparison of the Maximum Effluent Concentration (MEC) and Maximum Ambient Background Concentration to the applicable criterion that has been properly adjusted for hardness. Unless otherwise noted, for the hardness-dependent CTR metals criteria the following procedures were followed for properly adjusting the criterion for hardness when conducting the RPA.

a) The SIP requires water quality-based effluent limitations (WQBELs) if the MEC is equal to or exceeds the applicable criterion, adjusted for hardness. For comparing the MEC to the applicable criterion, the "fully mixed" reasonable worst-case downstream ambient hardness was used to adjust the criterion. In this evaluation the portion of the receiving water affected by the discharge is analyzed. For hardness-dependent criteria, the hardness of the effluent has an impact on the determination of the applicable criterion in areas of the receiving water affected by the discharge. Therefore, for comparing the MEC to the applicable criterion, the reasonable worst-case downstream ambient hardness was used to adjust the criterion. For this situation it is necessary to consider the hardness of the effluent in determining the applicable hardness to adjust the criterion. The procedures for determining the applicable criterion after proper adjustment using the reasonable worst-case downstream ambient hardness is outlined in subsection ii, below.

b) The SIP requires WQBELs if the receiving water is impaired upstream (outside the influence) of the discharge, i.e., if the Maximum Ambient Background Concentration of a pollutant exceeds the applicable criterion, adjusted for hardness[4]. For comparing the Maximum Ambient Background Concentration to the applicable criterion, the reasonable worst-case upstream ambient hardness was used to adjust the criteria. This is appropriate, because this area is outside the influence of the discharge. Since the discharge does not impact the upstream hardness, the effect of the effluent hardness was not included in this evaluation.

ii. **Calculating Water Quality-Based Effluent Limitations.** The remaining discussion in this section relates to the development of WQBELs when it

[4] The pollutant must also be detected in the effluent.

has been determined that the discharge has reasonable potential to cause or contribute to an exceedance of the CTR hardness-dependent metals criteria in the receiving water.

A 2006 Study[5] developed procedures for calculating the effluent concentration allowance (ECA)[6] for CTR hardness-dependent metals. The 2006 Study demonstrated that it is necessary to evaluate all discharge conditions (e.g. high and low flow conditions) and the hardness and metals concentrations of the effluent and receiving water when determining the appropriate ECA for these hardness-dependent metals. This method is superior to relying on downstream receiving water samples alone because it captures all possible mixed conditions in the receiving water. Both receiving water and effluent hardness vary based on flow and other factors, but the variability of receiving water and effluent hardness is sometimes independent. Using a calculated hardness value ensures that the Central Valley Water Board considers all possible mixed downstream values that may result from these two independent variables. Relying on receiving water sampling alone is less likely to capture all possible mixed downstream conditions.

The equation describing the total recoverable regulatory criterion, as established in the CTR[7], is as follows:

$$\text{CTR Criterion} = \text{WER} \times (e^{m[\ln(H)]+b}) \qquad \text{(Equation 1)}$$

Where:

H = hardness (as $CaCO_3$)[8]
WER = water-effect ratio
m, b = metal- and criterion-specific constants

In accordance with the CTR, the default value for the WER is 1. A WER study must be conducted to use a value other than 1. The constants “m” and “b” are specific to both the metal under consideration, and the type of total recoverable criterion (i.e., acute or chronic). The metal-specific values for these constants are provided in the CTR at paragraph (b)(2), Table 1.

The equation for the ECA is defined in Section 1.4, Step 2, of the SIP and is as follows:

$$\text{ECA} = C \qquad (\text{when } C \leq B)^{9} \qquad \text{(Equation 2)}$$

[5] Emerick, R.W.; Borroum, Y.; & Pedri, J.E., 2006. California and National Toxics Rule Implementation and Development of Protective Hardness Based Metal Effluent Limitations. WEFTEC, Chicago, Ill.
[6] The ECA is defined in Appendix 1 of the SIP (page Appendix 1-2). The ECA is used to calculate WQBELs in accordance with Section 1.4 of the SIP.
[7] 40 CFR § 131.38(b)(2).
[8] For this discussion, all hardness values are in mg/L as $CaCO_3$.

Where:

C = the priority pollutant criterion/objective, adjusted for hardness (see Equation 1, above)

B = the ambient background concentration

The 2006 Study demonstrated that the relationship between hardness and the calculated criteria is the same for some metals, so the same procedure for calculating the ECA may be used for these metals. The same procedure can be used for chronic cadmium, chromium III, copper, nickel, and zinc. These metals are hereinafter referred to as "Concave Down Metals". "Concave Down" refers to the shape of the curve represented by the relationship between hardness and the CTR criteria in Equation 1. Another similar procedure can be used for determining the ECA for acute cadmium, lead, and acute silver, which are referred to hereafter as "Concave Up Metals".

ECA for Chronic Cadmium, Chromium III, Copper, Nickel, and Zinc – For Concave Down Metals (i.e., chronic cadmium, chromium III, copper, nickel, and zinc) the 2006 Study demonstrates that when the effluent is in compliance with the CTR criteria and the upstream receiving water is in compliance with the CTR criteria, any mixture of the effluent and receiving water will always be in compliance with the CTR criteria[10]. The 2006 Study proves that regardless of whether the effluent hardness is lower or greater than the upstream hardness, the reasonable worst-case flow condition is the effluent dominated condition (i.e., no receiving water flow)[11]. Consequently, for Concave Down Metals, the CTR criteria have been calculated using the downstream ambient hardness under this condition.

The effluent hardness ranged from 112 mg/L to 133 mg/L, based on 8 samples from November 2007 to December 2011. The upstream receiving water hardness varied from 44 mg/L to 150 mg/L, based on 39 samples from November 2007 to December 2011. Under the effluent dominated condition, the reasonable worst-case downstream ambient hardness is 112 mg/L. As demonstrated in the example shown in Table F 4, below, using this hardness to calculate the ECA for all Concave Down Metals will result in WQBELs that are protective under all flow conditions, from the effluent dominated condition to high flow condition. This example

[9] The 2006 Study assumes the ambient background metals concentration is equal to the CTR criterion (i.e. C ≤ B)
[10] 2006 Study, p. 5700
[11] There are two typographical errors in the 2006 Study in the discussion of Concave Down Metals when the effluent hardness is less than the receiving water hardness. The effluent and receiving water hardness were transposed in the discussion, but the correct hardness values were used in the calculations. The typographical errors were confirmed by the author of the 2006 Study, by email dated 1 April 2011, from Dr. Robert Emerick to Mr. James Marshall, Central Valley Water Board.

for copper assumes the following conservative conditions for the upstream receiving water:

- Upstream receiving water always at the lowest observed upstream receiving water hardness (i.e., 44 mg/L)
- Upstream receiving water copper concentration always at the CTR criteria (i.e., no assimilative capacity).

Using these reasonable worst-case receiving water conditions, a simple mass balance (as shown in Equation 3, below) accounts for all possible mixtures of effluent and receiving water under all flow conditions.

$$C_{MIX} = C_{RW} \times (1\text{-}EF) + C_{Eff} \times (EF) \qquad \text{(Equation 3)}$$

Where:

C_{MIX} = Mixed concentration (e.g. metals or hardness)
C_{RW} = Upstream receiving water concentration
C_{Eff} = Effluent concentration
EF = Effluent Fraction

In this example, for copper, for any receiving water flow condition (high flow to low flow), the fully-mixed downstream ambient copper concentration is in compliance with the CTR criteria.[12].

[12] This method considers the actual lowest observed upstream hardness and actual lowest observed effluent hardness to determine the reasonable worst-case ambient downstream hardness under all possible receiving water flow conditions. Table F-4 demonstrates that the receiving water is always in compliance with the CTR criteria at the fully-mixed location in the receiving water. It also demonstrates that the receiving water is in compliance with the CTR criteria for all mixtures from the point of discharge to the fully-mixed location. Therefore, a mixing zone is not used for compliance.

Table F-6. Copper ECA Evaluation

Lowest Observed Effluent Hardness	**112 mg/L (as $CaCO_3$)**
Lowest Observed Upstream Receiving Water Hardness	**44 mg/L (as $CaCO_3$)**
Highest Assumed Upstream Receiving Water Copper Concentration	**4.7 µg/L[1]**
Copper $ECA_{chronic}$[2]	**10.3 µg/L**

Effluent Fraction[6]		Fully Mixed Downstream Ambient Concentration			
		Hardness[3] (mg/L)	**CTR Criteria[4] (µg/L)**	**Copper[5] (µg/L)**	**Complies with CTR Criteria**
High Flow	1%	44.68	4.7	4.7	**Yes**
	5%	47.4	4.9	4.9	**Yes**
	15%	54.2	5.5	5.5	**Yes**
	25%	61	6.1	6.0	**Yes**
	50%	78	7.5	7.5	**Yes**
Low Flow	75%	95	8.9	8.9	**Yes**
	100%	112	10.3	10.3	**Yes**

1 Highest assumed upstream receiving water copper concentration calculated using Equation 1 for chronic criterion at a hardness of **44 mg/L**.

2 ECA calculated using Equation 1 for chronic criterion at a hardness of **112 mg/L**.

3 Fully mixed downstream ambient hardness is the mixture of the receiving water and effluent hardness at the applicable effluent fraction using Equation 3.

4 Fully mixed downstream ambient criteria are the chronic criteria calculated using Equation 1 at the mixed hardness.

5 Fully mixed downstream ambient copper concentration is the mixture of the receiving water and effluent copper concentrations at the applicable effluent fraction using Equation 3.

6 The effluent fraction ranges from 1% at the high receiving water flow condition, to 100% at the lowest receiving water flow condition (i.e., effluent dominated).

Table F-7a. Cadmium $ECA_{(CHRONIC)}$ Evaluation

Lowest Observed Effluent Hardness	**112 mg/L (as $CaCO_3$)**
Lowest Observed Upstream Receiving Water Hardness	**44 mg/L (as $CaCO_3$)**
Highest Assumed Upstream Receiving Water Cadmium Concentration	**1.3 µg/L[1]**
Cadmium $ECA_{chronic}$[2]	**2.7 µg/L**

Effluent Fraction[6]		Fully Mixed Downstream Ambient Concentration			
		Hardness[3] (mg/L)	**CTR Criteria[4] (µg/L)**	**Copper[5] (µg/L)**	**Complies with CTR Criteria**
High Flow	1%	44.68	1.3	1.3	**Yes**
	5%	47.4	1.4	1.4	**Yes**
	15%	54.2	1.5	1.5	**Yes**
	25%	61	1.7	1.6	**Yes**
	50%	78	2.0	2.0	**Yes**
Low Flow	75%	95	2.4	2.4	**Yes**
	100%	112	2.7	2.7	**Yes**

1 Highest assumed upstream receiving water cadmium concentration calculated using

Equation 1 for chronic criterion at a hardness of **44 mg/L**.

[2] ECA calculated using Equation 1 for chronic criterion at a hardness of **112 mg/L**.

[3] Fully mixed downstream ambient hardness is the mixture of the receiving water and effluent hardness at the applicable effluent fraction using Equation 3.

[4] Fully mixed downstream ambient criteria are the chronic criteria calculated using Equation 1 at the mixed hardness.

[5] Fully mixed downstream ambient cadmium concentration is the mixture of the receiving water and effluent copper concentrations at the applicable effluent fraction using Equation 3.

[6] The effluent fraction ranges from 1% at the high receiving water flow condition, to 100% at the lowest receiving water flow condition (i.e., effluent dominated).

Table F-7b. Chromium III($_{CHRONIC}$) ECA Evaluation

Lowest Observed Effluent Hardness	**112 mg/L (as $CaCO_3$)**
Lowest Observed Upstream Receiving Water Hardness	**44 mg/L (as $CaCO_3$)**
Highest Assumed Upstream Receiving Water Chromium Concentration	**106.9 µg/L[1]**
Chromium $ECA_{chronic}$[2]	**227.1 µg/L**

Effluent Fraction[6]		**Fully Mixed Downstream Ambient Concentration**			
		Hardness[3] (mg/L)	**CTR Criteria[4] (µg/L)**	**Copper[5] (µg/L)**	**Complies with CTR Criteria**
High Flow	1%	44.68	107.0	106.9	**Yes**
	5%	47.4	112.3	111.7	**Yes**
	15%	54.2	125.3	123.9	**Yes**
	25%	61	138.1	136.0	**Yes**
	50%	78	168.9	166.4	**Yes**
	75%	95	198.5	196.8	**Yes**
Low Flow	100%	112	227.1	227.1	**Yes**

[1] Highest assumed upstream receiving water chromium concentration calculated using Equation 1 for chronic criterion at a hardness of **44 mg/L**.

[2] ECA calculated using Equation 1 for chronic criterion at a hardness of **112 mg/L**.

[3] Fully mixed downstream ambient hardness is the mixture of the receiving water and effluent hardness at the applicable effluent fraction using Equation 3.

[4] Fully mixed downstream ambient criteria are the chronic criteria calculated using Equation 1 at the mixed hardness.

[5] Fully mixed downstream ambient chromium concentration is the mixture of the receiving water and effluent copper concentrations at the applicable effluent fraction using Equation 3.

[6] The effluent fraction ranges from 1% at the high receiving water flow condition, to 100% at the lowest receiving water flow condition (i.e., effluent dominated).

Table F-7c. Nickel($_{CHRONIC}$) ECA Evaluation

Lowest Observed Effluent Hardness	**112 mg/L (as $CaCO_3$)**
Lowest Observed Upstream Receiving Water Hardness	**44 mg/L (as $CaCO_3$)**
Highest Assumed Upstream Receiving Water Nickel Concentration	**26.4 µg/L[1]**
Nickel $ECA_{chronic}$[2]	**57.4 µg/L**

Effluent Fraction[6]		**Fully Mixed Downstream Ambient Concentration**			
		Hardness[3] (mg/L)	**CTR Criteria[4] (µg/L)**	**Nickel[5] (µg/L)**	**Complies with CTR Criteria**
High Flow	1%	44.68	26.4	26.4	**Yes**
	5%	47.4	27.7	27.6	**Yes**
	15%	54.2	31.1	30.7	**Yes**
	25%	61	34.3	33.9	**Yes**
	50%	78	42.3	41.7	**Yes**
	75%	95	49.9	49.6	**Yes**
Low Flow	100%	112	57.4	57.4	**Yes**

1 Highest assumed upstream receiving water nickel concentration calculated using Equation 1 for chronic criterion at a hardness of **44 mg/L**.

2 ECA calculated using Equation 1 for chronic criterion at a hardness of **112 mg/L**.

3 Fully mixed downstream ambient hardness is the mixture of the receiving water and effluent hardness at the applicable effluent fraction using Equation 3.

4 Fully mixed downstream ambient criteria are the chronic criteria calculated using Equation 1 at the mixed hardness.

5 Fully mixed downstream ambient nickel concentration is the mixture of the receiving water and effluent copper concentrations at the applicable effluent fraction using Equation 3.

6 The effluent fraction ranges from 1% at the high receiving water flow condition, to 100% at the lowest receiving water flow condition (i.e., effluent dominated).

Table F-7d. Zinc($_{(CHRONIC)}$) ECA Evaluation

Lowest Observed Effluent Hardness	**112 mg/L (as $CaCO_3$)**
Lowest Observed Upstream Receiving Water Hardness	**44 mg/L (as $CaCO_3$)**
Highest Assumed Upstream Receiving Water Zinc Concentration	**60.5 µg/L[1]**
Zinc $ECA_{chronic}$[2]	**131.9 µg/L**

Effluent Fraction[6]		**Fully Mixed Downstream Ambient Concentration**			
		Hardness[3] (mg/L)	**CTR Criteria[4] (µg/L)**	**Copper[5] (µg/L)**	**Complies with CTR Criteria**
High Flow	1%	44.68	60.5	60.5	**Yes**
	5%	47.4	63.7	63.4	**Yes**
	15%	54.2	71.3	70.6	**Yes**
	25%	61	78.8	77.8	**Yes**
	50%	78	97.1	95.8	**Yes**
	75%	95	114.7	113.0	**Yes**
Low Flow	100%	112	131.9	131.9	**Yes**

1 Highest assumed upstream receiving water zinc concentration calculated using Equation 1 for

chronic criterion at a hardness of **44 mg/L**.

[2] ECA calculated using Equation 1 for chronic criterion at a hardness of **112 mg/L**.

[3] Fully mixed downstream ambient hardness is the mixture of the receiving water and effluent hardness at the applicable effluent fraction using Equation 3.

[4] Fully mixed downstream ambient criteria are the chronic criteria calculated using Equation 1 at the mixed hardness.

[5] Fully mixed downstream ambient zinc concentration is the mixture of the receiving water and effluent copper concentrations at the applicable effluent fraction using Equation 3.

[6] The effluent fraction ranges from 1% at the high receiving water flow condition, to 100% at the lowest receiving water flow condition (i.e., effluent dominated).

$$ECA = \left(\frac{m\left(H_e - H_{rw}\right)\left(e^{m\{\ln(H_{rw})\}+b}\right)}{H_{rw}} \right) + e^{m\{\ln(H_{rw})\}+b} \qquad \text{(Equation 4)}$$

Where:

m, b = criterion specific constants (from CTR)

H_e = lowest observed effluent hardness

H_{rw} = reasonable worst-case upstream receiving water hardness

An example similar to the Concave Down Metals is shown for lead**,** a Concave Up Metal, in Table F-5, below. As previously mentioned, the lowest effluent hardness is 112 mg/L, while the upstream receiving water hardness ranged from 44 mg/L to 150 mg/L In this case, the reasonable worst-case upstream receiving water hardness to use in Equation 4 to calculate the ECA is 44 mg/L.

Table F-8a. Lead$_{(CHRONIC)}$ ECA Evaluation

Lowest Observed Effluent Hardness	**112 mg/L**
Reasonable Worst-case Upstream Receiving Water Hardness	44 **mg/L**
Reasonable Worst-case Upstream Receiving Water Lead Concentration	**1.1 µg/L**[1]
Lead ECA$_{chronic}$[2]	**3.3 µg/L**

Effluent Fraction[6]		**Fully Mixed Downstream Ambient Concentration**			
		Hardness[3] **(mg/L)** **(as $CaCO_3$)**	**CTR Criteria**[4] **(µg/L)**	**Lead**[5] **(µg/L)**	**Complies with CTR Criteria**
High Flow	1%	44.68	1.1	1.1	**Yes**
	5%	47.4	1.2	1.2	**Yes**
	15%	54.2	1.5	1.4	**Yes**
	25%	61	1.7	1.7	**Yes**
	50%	78	2.3	2.2	**Yes**
	75%	95	3.0	2.8	**Yes**
Low Flow	100%	112	3.7	3.3	**Yes**

1 Reasonable worst-case upstream receiving water lead concentration calculated using Equation 1 for chronic criterion at a hardness of **112 mg/L**.

2 ECA calculated using Equation 4 for chronic criteria.

3 Fully mixed downstream ambient hardness is the mixture of the receiving water and effluent hardness at the applicable effluent fraction.

4 Fully mixed downstream ambient criteria are the chronic criteria calculated using Equation 1 at the mixed hardness.

5 Fully mixed downstream ambient lead concentration is the mixture of the receiving water and effluent lead concentrations at the applicable effluent fraction.

6 The effluent fraction ranges from 1% at the high receiving water flow condition, to 100% at the lowest receiving water flow condition (i.e., effluent dominated).

Table F-8b. Cadmium$_{(CHRONIC)}$ ECA Evaluation

Lowest Observed Effluent Hardness	**112 mg/L**
Reasonable Worst-case Upstream Receiving Water Hardness	44 **mg/L**
Reasonable Worst-case Upstream Receiving Water Cadmium Concentration	**1.3µg/L**[1]
Cadmium ECA$_{chronic}$[2]	**2.69 µg/L**

Effluent Fraction[6]		**Fully Mixed Downstream Ambient Concentration**			
		Hardness[3] **(mg/L) (as $CaCO_3$)**	**CTR Criteria**[4] **(µg/L)**	**Cadmium**[5] **(µg/L)**	**Complies with CTR Criteria**
High Flow	1%	44.68	1.3	1.3	**Yes**
	5%	47.4	1.4	1.4	**Yes**
	15%	54.2	1.5	1.5	**Yes**
	25%	61	1.7	1.6	**Yes**
	50%	78	2.0	2.0	**Yes**
	75%	95	2.4	2.3	**Yes**
Low Flow	100%	112	2.7	2.7	**Yes**

1 Reasonable worst-case upstream receiving water cadmium concentration calculated using Equation 1 for chronic criterion at a hardness of **112 mg/L**.

2 ECA calculated using Equation 4 for chronic criteria.

3 Fully mixed downstream ambient hardness is the mixture of the receiving water and effluent hardness at the applicable effluent fraction.

4 Fully mixed downstream ambient criteria are the chronic criteria calculated using Equation 1 at the mixed hardness.

5 Fully mixed downstream ambient cadmium concentration is the mixture of the receiving water and effluent lead concentrations at the applicable effluent fraction.

6 The effluent fraction ranges from 1% at the high receiving water flow condition, to 100% at the lowest receiving water flow condition (i.e., effluent dominated).

Table F-8c. Silver$_{ACUTE)}$ ECA Evaluation

Lowest Observed Effluent Hardness	**112 mg/L**
Reasonable Worst-case Upstream Receiving Water Hardness	44 **mg/L**
Reasonable Worst-case Upstream Receiving Water Silver Concentration	**1.0 µg/L**[1]
Silver ECA$_{acute}$[2]	**3.62 µg/L**

Effluent Fraction[6]		**Fully Mixed Downstream Ambient Concentration**			
		Hardness[3] **(mg/L) (as $CaCO_3$)**	**CTR Criteria**[4] **(µg/L)**	**Silver**[5] **(µg/L)**	**Complies with CTR Criteria**
High Flow	1%	44.68	1.0	1.0	**Yes**
	5%	47.4	1.1	1.1	**Yes**
	15%	54.2	1.4	1.4	**Yes**
	25%	61	1.7	1.6	**Yes**
	50%	78	2.6	2.3	**Yes**
	75%	95	3.7	3.0	**Yes**
Low Flow	100%	112	4.9	3.6	**Yes**

1 Reasonable worst-case upstream receiving water silver concentration calculated using Equation 1 for acute criterion at a hardness of **112 mg/L**.

2 ECA calculated using Equation 4 for acute criteria.

3 Fully mixed downstream ambient hardness is the mixture of the receiving water and effluent hardness at the applicable effluent fraction.

4 Fully mixed downstream ambient criteria are the acute criteria calculated using Equation 1 at the mixed hardness.

5 Fully mixed downstream ambient silver concentration is the mixture of the receiving water and effluent lead concentrations at the applicable effluent fraction.

6 The effluent fraction ranges from 1% at the high receiving water flow condition, to 100% at the lowest receiving water flow condition (i.e., effluent dominated).

Based on the procedures discussed above, Table F-9 lists all the CTR hardness-dependent metals and the associated ECA used in this Order.

Table F-9. Summary of ECA Evaluations for CTR Hardness-dependent Metals

CTR Metals	ECA (µg/L, total recoverable)	
	acute	chronic
Copper	15.6	10.3
Chromium III	1905.4	227.1
Cadmium	4.91	2.7
Lead	85.2	3.32
Nickel	516.4	57.4
Silver	3.62	-----
Zinc	131.9	131.9

3. Determining the Need for WQBELs

a. The Central Valley Water Board conducted the reasonable potential analysis (RPA) in accordance with section 1.3 of the SIP. Although the SIP applies directly to the control of CTR priority pollutants, the State Water Board has held that the Regional Water Boards may use the SIP as guidance for water quality-based toxics control.[13] The SIP states in the introduction "*The goal of this Policy is to establish a standardized approach for permitting discharges of toxic pollutants to non-ocean surface waters in a manner that promotes statewide consistency*." Therefore, in this Order the RPA procedures from the SIP were used to evaluate reasonable potential for both CTR and non-CTR constituents based on information submitted as part of the application, in studies, and as directed by monitoring and reporting programs.

b. Constituents with No Reasonable Potential. WQBELs are not included in this Order for constituents that do not demonstrate reasonable potential (i.e. constituents were not detected in the effluent or receiving water); however, monitoring for those pollutants is established in this Order as required by the SIP. If the results of effluent monitoring demonstrate reasonable potential, this Order may be reopened and modified by adding an appropriate effluent limitation.

Most constituents with no reasonable potential are not discussed in this Order. However, the following constituents were found to have no reasonable potential after assessment of the data:

[13] See Order WQO 2001-16 (Napa) and Order WQO 2004-0013 (Yuba City).

i. Aluminum

Aluminum is the third most abundant element in the earth's crust and is ubiquitous in both soils and aquatic sediments. When mobilized in surface waters, aluminum has been shown to be toxic to various fish species. However, the potential for aluminum toxicity in surface waters is directly related to the chemical form of aluminum present, and the chemical form is highly dependent on water quality characteristics that ultimately determine the mechanism of aluminum toxicity. Surface water characteristics, including pH, temperature, colloidal material, fluoride and sulfate concentrations, and total organic carbon, all influence aluminum speciation and its subsequent bioavailability to aquatic life. Calcium [hardness] concentrations in surface water may also reduce aluminum toxicity by competing with monomeric aluminum (Al^{3+}) binding to negatively charged fish gills.

(a) WQO. The Code of Federal Regulations promulgated criteria for priority toxic pollutants for California's surface waters as part of section 131.38 Establishment of Numeric Criteria for Priority Toxic Pollutants for the State of California (California Toxics Rule or CTR), including metals criteria. Freshwater aquatic life criteria for metals are expressed as a function of total hardness. However, aluminum criteria were not promulgated as part of the CTR. Absent numeric aquatic life criteria for aluminum, WQBEL's in the Central Valley Water Board's NPDES permits are based on the Basin Plan's narrative toxicity objective.

The Basin Plan's *Policy for Application of Water Quality Objectives* requires the Central Valley Water Board to consider, "*on a case-by-case basis, direct evidence of beneficial use impacts, all material and relevant information submitted by the discharger and other interested parties, and relevant numerical criteria and guidelines developed and/or published by other agencies and organizations. In considering such criteria, the Board evaluates whether the specific numerical criteria which are available through these sources and through other information supplied to the Board, are relevant and appropriate to the situation at hand and, therefore, should be used in determining compliance with the narrative objective*." Relevant information includes, but is not limited to the following:
(1) USEPA Guidelines for Deriving Numerical National Water Quality Criteria for the Protection of Aquatic Organisms and Their Uses,
(2) USEPA National Recommended Ambient Water Quality Criteria (NAWQC), (3) NAWQC–Correction, and (4) site-specific aluminum studies conducted by dischargers within the Central Valley Region. (Basin Plan, p. IV.-17.00; see also, 40 CFR 122.44(d)(vi).)

USEPA NAWQC. USEPA recommended the NAWQC aluminum chronic criterion at 87 µg/L based upon the following two toxicity tests. All tests were conducted in water that contained pH range of 6.0 to 6.6 and hardness at 12 mg/L as $CaCO_3$.

(1) Acute toxicity tests at various aluminum doses were conducted in various acidic waters (pH 6.0 – 6.5) on 159- and 160-day old striped bass. The 159-day old striped bass showed no mortality in waters with pH at 6.5 and aluminum doses at 390 µg/L, and the 160-day old striped bass showed a 58% mortality at a dose of 174.4 µg/L in same pH waters. However, the 160-day old striped bass showed 98% mortality at an aluminum dose of 87.2 µg/L in waters with pH at 6.0, which is USEPA's basis for the 87 µg/L chronic criterion. The varied results draw into question this study and the applicability of the NAWQC chronic criterion of 87 µg/L.

(2) Chronic toxicity effects on 60-day old brook trout were evaluated in acidic pH waters (6.5-6.9 pH) in five cells at various aluminum doses (4, 57, 88, 169, and 350 µg/L). Chronic evaluation started upon hatching of eyed eggs of brook trout, and their weight and length were measured after 45 days and 60 days. The 60-day old brook trout showed 24% weight loss at 169 µg/L of aluminum and 4% weight loss at 88 µg/L of aluminum, which is the basis for USEPA's chronic criteria. Though this test study shows chronic toxic effects of a 4% reduction in weight after exposure for 60-days, the chronic criterion is based on 4 day exposure; so again, the applicability of the NAWQC chronic criterion of 87 µg/L is questionable.

Site-specific Conditions. Effluent and receiving water data from Dredger Cut indicate that the pH and hardness values are not similar to the low pH and hardness conditions under which the chronic criterion for aluminum was developed, as shown in the table below, and therefore, the Central Valley Water Board does not expect aluminum to be as reactive in Dredger Cut as in the previously described toxicity tests. The pH in Dredger Cut ranged from 6.9 to 9.8 based on 80 monitoring results obtained between March 2007 and February 2011. Hardness data for Dredger Cut ranged from 50 mg/L to 130 mg/L (as $CaCO_3$) based on 22 samples during the same period, which is above the conditions, and thus less toxic, than the tests used to develop the chronic criterion. Brook trout and striped bass have not been surveyed nor expected to be present (http://bios.dfg.ca.gov/) since striped bass is non-native to California and brook trout is present in higher elevation lakes and streams.

Table F-10. Summary of pH and Hardness at EFF-001 and RSW-005

Parameter	Units	Test Conditions for Applicability of Chronic Criterion	Effluent	Dredger Cut
pH	standard units	6.0 – 6.5	7.6[1]	8.1
Hardness, Total (as $CaCO_3$)	mg/L	12	128[2]	89[2]

[1] Median pH
[2] Average hardness

Local Environmental Conditions and Studies. Twenty-one site-specific aluminum toxicity tests have been conducted within the Central Valley Region. The pH and hardness of Dredger Cut are similar, as shown in the table below, and thus the results of these site-specific aluminum toxicity tests is relevant and appropriate for Dredger Cut. As shown in the following table, all EC_{50} toxicity study result values are at concentrations of aluminum above 5000 µg/L. Thus, the toxic effects of aluminum in surface waters within the Central Valley Region, including Dredger Cut, is less toxic (or less reactive) to aquatic species than demonstrated in the toxicity tests that USEPA used for the basis of establishing the chronic criterion of 87 µg/L. This new information, and review of the toxicity tests USEPA used to establish the chronic criterion, indicates that 87 µg/L is overly stringent and not applicable to Dredger Cut.

Table F-11. Central Valley Region Site-Specific Toxicity Data

Discharger (City)	Species	Test Waters	Hardness Value	Total Aluminum EC_{50} Value	pH	WER
Auburn	*Ceriodaphnia dubia*	Effluent	99	>5270	7.44	>19.3
	" "	Surface Water	16	>5160	7.44	>12.4
Manteca	" "	Surface Water/Effluent	124	>8800	9.14	N/C
	" "	Effluent	117	>8700	7.21	>27.8
	" "	Surface Water	57	7823	7.58	25.0
	" "	Effluent	139	>9500	7.97	>21.2
	" "	Surface Water	104	>11000	8.28	>24.5
	" "	Effluent	128	>9700	7.78	>25.0
	" "	Surface Water	85	>9450	7.85	>25.7
	" "	Effluent	106	>11900	7.66	>15.3
	" "	Surface Water	146	>10650	7.81	>13.7
Modesto	" "	Surface Water/Effluent	120/156	31604	8.96	211
Yuba City	" "	Surface Water/Effluent	114/164[1]	>8000	7.60/7.46	>53.5
Placer County	" "	Effluent	150	>5000	7.4 – 8.7	>13.7
Manteca	*Daphnia magna*	Surface Water/Effluent	124	>8350	9.14	N/C
Modesto	" "	Surface Water/Effluent	120/156	>11900	8.96	>79.6
Yuba City	" "	Surface Water/Effluent	114/164[1]	>8000	7.60/7.46	>53.5
Manteca	*Oncorhynchus mykiss* (rainbow trout)	Surface Water/Effluent	124	>8600	9.14	N/C
Auburn	" "	Surface Water	16	>16500	7.44	N/C
Modesto	" "	Surface Water/Effluent	120/156	>34250	8.96	>229
Yuba City	" "	Surface Water/Effluent	114/164[1]	>8000	7.60/7.46	>53.5

[1] Hardness values may be biased high because the EDTA titrimetic method is subject to interferences that measure as hardness (barium, cadmium, lead, manganese, strontium, and zinc will be measured as hardness) producing hardness numbers that are likely to be greater than the calculation of hardness based upon the ICP analysis of calcium and magnesium. Upstream receiving water hardness ranged from 30 to 50.9 mg/L as $CaCO_3$ between January 2008 and August 2011. Furthermore, the upstream receiving water hardness was 37 mg/L as $CaCO_3$ on 4 October 2005, 7 days prior to the Feasibility Assessment (first phase of a Water Effects Ratio study) sample collection date of 11 October 2005. It is likely that matrix interferences from other metals were responsible for the unexpected hardness values reported by Pacific EcoRisk.

The Discharger has not conducted a toxicity test for aluminum; however, the Cities of Manteca and Modesto conducted toxicity tests in the San Joaquin River. As shown, the test water quality characteristics of the San Joaquin River near Manteca and Modesto are similar to Dredger Cut for hardness, with the hardness ranging from 57 to 156 mg/L as $CaCO_3$ in comparison to the hardness of Dredger Cut that from 50 to 130 mg/L as $CaCO_3$. Thus results of site-specific studies conducted on the San Joaquin River are representative to Dredger Cut. Based on these two primary water quality characteristics (pH and hardness) that drive aluminum speciation, the aluminum toxicity within San Joaquin River is expected to be similar in Dredger Cut. Therefore, the Cities of Manteca and Modesto aluminum toxicity test studies are relevant and representative in this case for use in determining the specific numerical criteria to be used in determining compliance with the Basin Plan's narrative toxicity objective. The Cities of Manteca and Modesto aluminum toxicity study resulted in a minimum site-specific aluminum objective of 7,823 µg/L. Thus, these results support the conclusion that the 87 µg/L chronic criterion is overly stringent for Dredger Cut.

DPH has established Secondary MCLs to assist public drinking water systems in managing their drinking water for aesthetic conditions such as taste, color, and odor. The Secondary MCL for aluminum is 200 µg/L, and is applicable in Dredger Cut, because MUN is a beneficial use.

(b) RPA Results. The maximum effluent concentration for aluminum was 47 µg/L, based on 26 samples collected between December 2009 and December 2011. The maximum annual average effluent concentration for aluminum was 34 µg/L based on 2009, 2010 and 2011 calendar years. The maximum observed upstream receiving water aluminum concentration was 218 µg/L, and the maximum annual average concentration was 114 µg/L, based on 4 samples collected between December 2010 and August 2011. Therefore, aluminum in the discharge does not demonstrate reasonable potential to cause or contribute to an in-stream excursion above the applicable water quality objectives, and the WQBELs for aluminum have not been retained in this Order. Removal of these effluent limitations is in accordance with federal antibacksliding regulations (see section IV.D.3 of the Fact Sheet).

ii. Chlorodibromomethane

a. WQO. The CTR includes the National Recommended Water Quality Criteria criterion for chlorodibromomethane of 0.41 µg/L for the protection of human health for consumption of water and fish. Waste Discharge Requirements Order R5-2007-0113 included effluent limitations for chlorodibromomethane based on a one-in-a-million cancer risk for water from which both water and organisms are consumed. The MEC for chlorodibromomethane is non-detect with a detection level of 0.1 µg/L based on 26 samples.

b. RPA Results. The MEC for chlorodibromomethane was non-detect, based on 26 effluent samples from January 2009 – December 2011 (minimum MDL = 0.08 µg/L). The maximum ambient background concentration was also non-detect based on 12 receiving water samples from January 2009 – October 2011 (minimum MDL = 0.08 µg/L). Therefore, chlorodibromomethane in the discharge does not demonstrate reasonable potential to cause or contribute to an in-stream excursion above the CTR human health criterion of 0.41 µg/L, and the WQBELs for chlorodibromomethane have not been retained in this Order. Removal of these effluent limitations is in accordance with federal anti-backsliding regulations (see section IV.D.3 of the Fact Sheet).

iii. Dichlorobromomethane

(a) WQO. The CTR includes the National Recommended Water Quality Criteria criterion for dichlorobromomethane of 0.56 µg/L for the protection of human health for consumption of water and fish. Waste Discharge Requirements Order R5-2007-0113 included effluent limitations for chlorodibromomethane based on a one-in-a-million cancer risk for water from which both water and organisms are consumed. The MEC for dichlorobromomethane is non-detect with a detection level of 0.25 µg/L based on 26 samples.

(b) RPA Results. The MEC for dichlorobromomethane was non-detect, based on 26 effluent samples from January 2009 – December 2011 (minimum MDL = 0.16 µg/L). The maximum ambient background concentration was also non-detect based on 12 receiving water samples from January 2009 – October 2011 (minimum MDL = 0.16 µg/L). Therefore, dichlorobromomethane in the discharge does not demonstrate reasonable potential to cause or contribute to an in-stream excursion above the CTR human health criterion of 0.56 µg/L, and the WQBELs for dichlorobromomethane have not been retained in this Order. Removal of these effluent limitations is in accordance with federal anti-backsliding regulations (see section IV.D.3 of the Fact Sheet).

iv. Dioxin (2,3,7,8-TCDD)

(a) WQO. The CTR includes a criterion of 0.013 pg/L for 2,3,7,8-TCDD for the protection of human health for waters from which both water and organisms are consumed.

(b) RPA Results. As part of the Discharger's effluent and receiving water characterization study, quarterly dioxin and furan data was collected and analyzed for the 2010 – 2011 discharge season (4 samples). Three of the effluent samples for dioxin (2,3,7,8-TCDD) were non-detect and one sample was an estimated j-flagged value of 0.57 µg/L. Based on the lab sheets, however, several of the dioxin congener sample blanks showed detections. Due to concerns with the

data, the Discharger repeated the dioxin and furan sampling in 2012 using a different laboratory. The results of two additional dioxin samples were non-detect. The table below shows all dioxin (2,3,7,8-TCDD) results for the effluent between 2001 and 2012. The Central Valley Water Board finds the 15 December 2010 dioxin result is not reliable data due to lab contamination issues and was excluded from the RPA. The effluent and receiving water data were all non-detect for dioxin (2,3,7,8-TCDD). Therefore, the effluent does not have reasonable potential to cause or contribute to an exceedance of the CTR criterion for dioxin (2,3,7,8-TCDD) in the receiving water.

Table F-12: Effluent Dioxin (2,3,7,8-TCDD) Results

	Unknown Lab	Test America Lab	Frontier Analytical Lab
11/22/2001	ND		
8/27/2001	ND		
5/25/2002	ND		
8/27/2002	ND		
1/30/2003	ND		
8/7/2003	ND		
2/16/2004	ND		
9/3/2004	ND		
11/2/2009	ND		
12/15/2010		0.57J[1,2]	
3/29/2011		ND[2]	
5/25/2011		ND[2]	
10/25/2011		ND[2]	
4/20/2012			ND
5/3/2012			ND

[1] Sample blank contamination
[2] Data collected for effluent and receiving water characterization study.

The Discharger has monitored for dioxin in accordance with section 3 of the SIP. The Central Valley Water Board has reviewed the data and finds that no additional monitoring is required.

v. Endrin

(a) WQO. Endrin is a persistent chlorinated hydrocarbon pesticide. Endrin is a solid, white, almost odorless substance that was used as a pesticide to control insects, rodents, and birds. Endrin has not been produced or sold for general use in the United States since 1986. The CTR criteria for endrin are 0.036 µg/L (chronic 4-day average) and 0.086 µg/L (acute 1-hour average). The Basin Plan requires that persistent chlorinated hydrocarbon pesticides shall not be present in the water column at detectable concentrations.

RPA Results. Based on 35 samples from March 2000 to August 2011, endrin was detected in the effluent at a concentration of 0.012 µg/L on

15 December 2010 and detected, but not quantified, with an estimated concentration of 0.034J µg/L on 28 May 2004 and 0.008J µg/L on 25 May 2011. Table F-8 below shows all available effluent data for Endrin since 2000. As shown in the table, between 2000 and 2011 (35 samples) there has only been one detection and two j-flags, detected but not quantified. Endrin is a banned substance that has not been produced or sold for general use in the United States since 1986. Chlorinated hydrocarbon pesticides partition strongly to solids and thus unlikely to be detected in filtered effluent. Endrin data prior to filtration (2005) showed only one j-flagged sample in secondary effluent yet in the tertiary effluent there is a detection and a j-flagged sample.

Table F-13: Effluent Endrin Results

Date	Result (µg/L)	MDL	RL	SIP ML[1]
3/28/2000	ND	0.005	0.01	0.01
6/14/2000	ND	0.005	0.01	0.01
9/12/2000	ND	0.005	0.01	0.01
12/11/2000	ND	0.005	0.01	0.01
2/13/2001	ND	0.005	0.01	0.01
5/14/2001	ND	0.005	0.01	0.01
9/11/2001	ND	0.001	0.01	0.01
11/13/2001	ND	0.005	0.01	0.01
2/5/2002	ND	0.005	0.01	0.01
5/15/2002	ND	0.005	0.01	0.01
8/13/2002	ND	0.005	0.01	0.01
11/6/2002	ND	0.005	0.01	0.01
1/15/2003	ND	0.005	0.01	0.01
4/9/2003	ND	0.005	0.01	0.01
7/23/2003	ND	0.005	0.01	0.01
11/5/2003	ND	0.005	0.01	0.01
2/4/2004	ND	0.005	0.01	0.01
5/12/2004	0.034J[2]	0.025	0.05	0.01
8/18/2004	ND	0.005	0.05	0.01
10/20/2004	ND	0.005	0.05	0.01
2/2/2005	ND	0.005	0.01	0.01
4/13/2005	ND	0.005	0.01	0.01
9/7/2005	ND	0.005	0.01	0.01
11/16/2005	ND	0.005	0.012	0.01
1/25/2006	ND	0.005	0.01	0.01
4/12/2006	ND	0.002	0.01	0.01
4/19/2006	ND	0.002	0.01	0.01
4/26/2006	ND	0.002	0.01	0.01
5/6/2006	ND	0.002	0.01	0.01
5/10/2006	ND	0.002	0.01	0.01
11/2/2009	ND	0.003	0.01	0.01
12/15/2010	0.012	0.003	0.01	0.01
3/22/2011	ND	0.003	0.01	0.01
5/25/2011	0.008J[2]	0.003	0.01	0.01

Date	Result (µg/L)	MDL	RL	SIP ML[1]
8/17/2011	ND	0.003	0.01	0.01

[1] Minimum Level specified in Appendix 4 of the SIP is 0.01 µg/L for endrin
[2] Detected, but not quantified (DNQ), estimated concentration.

Based on this data the one detection is not representative of the effluent quality and no effluent limit is included in the permit. Continued monitoring for endrin is included in the Monitoring and Reporting Plan.

vi. Iron

(a) WQO. DPH has adopted a Secondary MCL for total recoverable iron of 300 µg/L for the protection of human welfare considerations (e.g., taste, odor, cloth staining, etc), which is applied as an annual average. The Basin Plan water quality objective for dissolved iron is 300 µg/L and is applied as a maximum concentration.

(b) RPA Results. The highest annual average total iron concentration in the effluent was 140 µg/L based on 9 samples from February 2009 to October 2011. The highest annual average total iron concentration in the receiving water was 185 µg/L, based on 10 samples from January 2009 to November 2011.

The maximum effluent concentration for dissolved iron was 130 µg/L, based on 13 samples from October 2010 to October 2011. The maximum concentration of dissolved iron in the receiving water was 200 µg/L, based on 13 samples from October 2010 to October 2011.

Therefore, iron in the discharge does not demonstrate reasonable potential to cause or contribute to an in-stream excursion above the applicable water quality objectives, and the WQBELs for iron are not required.

vii. Manganese

(a) WQO. DPH has adopted a Secondary MCL for total recoverable manganese of 50 µg/L for the protection of human welfare considerations (e.g., taste, odor, cloth staining, etc), which is applied as an annual average. The Basin Plan water quality objective for dissolved manganese is 50 µg/L and is applied as a maximum concentration.

(b) RPA Results. The highest annual average total manganese concentration in the effluent was 21 µg/L based on 28 samples from January 2009 to December 2011. The highest annual average total iron concentration in the receiving water was 25 µg/L, based on 29 samples from January 2009 to December 2011.

The maximum effluent concentration for dissolved iron was 29 µg/L, based on 13 samples from October 2010 to October 2011. The maximum concentration of dissolved iron in the receiving water was 21.2 µg/L, based on 13 samples from October 2010 to October 2011.

Therefore, manganese in the discharge does not demonstrate reasonable potential to cause or contribute to an in-stream excursion above the applicable water quality objectives, and the WQBELs for manganese have not been carried forward from the previous Order. Removal of these effluent limitations is in accordance with federal anti-backsliding regulations (see section IV.D.3 of the Fact Sheet).

viii. Nitrite

(a) WQO. DPH has adopted a Primary MCL for the protection of human health for nitrite as nitrogen of 1 mg/L.

(b) RPA Results. Since the Discharger upgraded the Facility to provide nitrification and denitrification, the maximum effluent concentration for nitrite was 0.48 mg/L based on 43 samples from May 2011 to December 2011. Therefore, the discharge does not demonstrate reasonable potential to cause or contribute to an in-stream excursion above the DPH primary MCL of 1 mg/L, and WQBELs for nitrite are not required.

ix. Temperature

(a) WQO. The Thermal Plan requires that a discharge shall not *i) exceed natural receiving water temperature by more than 20 °F; ii) create a zone, defined by water temperatures of more than 1 °F above natural receiving water temperature . . .; and iii) cause a surface temperature to rise greater than 4 °F above the natural temperature of the receiving waters at any time or place.* The Basin Plan also contains water quality objectives for temperature to protect the beneficial uses of the receiving water. Natural receiving water is defined as "*The temperature of the receiving water…unaffected by any elevated temperature waste discharge or irrigation return waters*", which typically is the upstream receiving water temperatures.

The discharge is to a dead end slough with no upstream natural flows. Because of this, it is not possible to implement the Thermal Plan or Basin Plan objectives for temperature that addresses temperature changes based on the natural receiving water temperature. Thus, previous Order R5-2007-0113 required the Discharger to conduct a site-specific temperature study to determine the appropriate temperature controls to protect the beneficial uses of the receiving water. Based on the study, receiving water limitations are included in

this Order. The Discharger submitted a thermal study in June 2010, Assessment of Water Temperatures and Characterization of Aquatic Biological Resources in Dredger Cut and Downstream Water Bodies to Determine Appropriate Temperature Controls for the White Slough Water Pollution Control Facility (Thermal Study), prepared by Robertson-Bryan, Inc. The Thermal Study recommended the following receiving water limitations on an instantaneous basis:

* 86ºF for the period May through October;
* 80ºF for the month of April;
* 75ºF for the months of March and November;
* 68ºF for the period December through February

See Section V.A.1.a of the Fact Sheet for more details.

(b) RPA Results. Based on the Discharger's study the discharge does not have reasonable potential to cause or contribute to an exceedance of the water quality objectives for temperature in the receiving water. However, this Order includes receiving water limitations, and as discussed in Section V.A.1.a of the Fact Sheet, this Order requires the Discharger to conduct additional temperature studies to evaluate impacts to delta smelt. Therefore, this Order may be reopened to include an effluent limit, or modify the receiving water limits for temperature based on the results of the study.

c. Constituents with Reasonable Potential. The Central Valley Water Board finds that the discharge has a reasonable potential to cause or contribute to an in-stream excursion above a water quality standard for ammonia, nitrate-nitrite, pH, chlorine residual, mercury and pathogens. WQBELs for these constituents are included in this Order. A summary of the RPA is provided in Attachment G, and a detailed discussion of the RPA for each constituent is provided below.

i. Ammonia

(a) WQO. The NAWQC for the protection of freshwater aquatic life for total ammonia, recommends acute (1-hour average; criteria maximum concentration or CMC) standards based on pH and chronic (30-day average; criteria continuous concentration or CCC) standards based on pH and temperature. USEPA also recommends that no 4-day average concentration should exceed 2.5 times the 30-day CCC. USEPA found that as pH increased, both the acute and chronic toxicity of ammonia increased. Salmonids were more sensitive to acute toxicity effects than other species. However, while the acute toxicity of ammonia was not influenced by temperature, it was found that invertebrates and young fish experienced increasing chronic toxicity effects with increasing temperature. Because the Delta has a

beneficial use of cold freshwater habitat and the presence of salmonids and early fish life stages in the Delta is well-documented, the recommended criteria for waters where salmonids and early life stages are present were used.

(b) RPA Results. The Facility is a POTW that treats domestic wastewater. Untreated domestic wastewater contains ammonia in concentrations that, without treatment, would be harmful to aquatic life and would violate the Basin Plan's narrative toxicity objective if discharged to the receiving water. Reasonable potential therefore exists and WQBELs are required.

Federal regulations at 40 C.F.R. §122.44(d)(1)(i) requires that, "Limitations must control all pollutants or pollutant parameters (either conventional, nonconventional, or toxic pollutants) which the Director determines are or may be discharged at a level which will cause, have the reasonable potential to cause, or contribute to an excursion above any State water quality standard, including State narrative criteria for water quality." For priority pollutants, the SIP dictates the procedures for conducting the RPA. Ammonia is not a priority pollutant. Therefore, the Central Valley Water Board is not restricted to one particular RPA method. Due to the site-specific conditions of the discharge, the Central Valley Water Board has used its judgment in determining the appropriate method for conducting the RPA for this non-priority pollutant constituent.

USEPA's September 2010 NPDES Permit Writer's Manual, page 6-30, states, "State implementation procedures might allow, or even require, a permit writer to determine reasonable potential through a qualitative assessment process without using available facility-specific effluent monitoring data or when such data are not available…A permitting authority might also determine that WQBELs are required for specific pollutants for all facilities that exhibit certain operational or discharge characteristics (e.g., WQBELs for pathogens in all permits for POTWs discharging to contact recreational waters)." USEPA's TSD also recommends that factors other than effluent data should be considered in the RPA, "When determining whether or not a discharge causes, has the reasonable potential to cause, or contributes to an excursion of a numeric or narrative water quality criterion for individual toxicants or for toxicity, the regulatory authority can use a variety of factors and information where facility-specific effluent monitoring data are unavailable. These factors also should be considered with available effluent monitoring data." With regard to POTWs, USEPA recommends that, "POTWs should also be characterized for the possibility of chlorine and ammonia problems." (TSD, p. 50)

Nitrification is a biological process that converts ammonia to nitrite and nitrite to nitrate. Denitrification is a process that converts nitrate to nitrite or nitric oxide and then to nitrous oxide or nitrogen gas, which is then released to the atmosphere. The Discharger currently uses nitrification to remove ammonia from the waste stream. Inadequate or incomplete nitrification may result in the discharge of ammonia to the receiving stream. Ammonia is known to cause toxicity to aquatic organisms in surface waters. Discharges of ammonia in concentrations that produce detrimental physiological responses to human, plant, animal, or aquatic life would violate the Basin Plan narrative toxicity objective. Discharges of ammonia in concentrations that produce detrimental physiological responses to human, plant, animal, or aquatic life would violate the Basin Plan narrative toxicity objective. Although the Discharger nitrifies the discharge, inadequate or incomplete nitrification creates the potential for ammonia to be discharged and provides the basis for the discharge to have a reasonable potential to cause or contribute to an in-stream excursion above the NAWQC. Therefore, the Central Valley Water Board finds the discharge has reasonable potential for ammonia and WQBELs are required.

(c) WQBELs. Effluent limitations for ammonia are included in this Order based on U.S. EPA's National Ambient Water Quality Criteria for the protection of the beneficial use of freshwater aquatic habitat. Inexplicably, the receiving water has reached pHs of over 9 standard units. pHs this high are not typical elsewhere within the Delta. Improper calibration of equipment may have contributed to a higher pHs, but not to the extent of over pH 9. Before calculating a lower ammonia limit based on unexplained high pHs, this Order requires continued receiving water monitoring for pH. This data will be evaluated to determine if the pH values are correct and if the combination of high pH and the effluent create toxic conditions for aquatic life. Until completion of this study, this Order carries forward the final AMEL and MDEL for ammonia of 1.3 mg/L and 4.3 mg/L, respectively, from previous Order R5-2007-0013 (See Attachment F, Table F-8 for WQBEL calculations). The use of seasonal effluent limitations was considered due to the seasonal variation of temperature of the effluent and receiving water. However, the acute criterion, which is not dependent on temperature, controls the effluent limitation derivation. Therefore, for the application of the acute condition (1-hr duration), the ammonia effluent limitations apply year-round.

(d) Plant Performance and Attainability. Analysis of the effluent data since upgrading the Facility, the Facility has consistently complied with the final ammonia effluent limits. The Central Valley Water Board

concludes, therefore, that immediate compliance with these effluent limitations is feasible.

ii. Diazinon and Chlorpyrifos

(a) WQO. A TMDL was adopted for chlorpyrifos and diazinon for the Delta and established site-specific Basin Plan water quality objectives for chlorpyrifos of 0.025 µg/L as a 1-hour average and 0.015 µg/L as a 4-day average and diazinon of 0.16 µg/L as a 1-hour average and 0.10 µg/L as a 4-day average for Delta Waterways as specified in, Appendix 42 of Basin Plan, which includes Dredger Cut. The TMDL also established waste load allocations for NPDES dischargers that are included in the Basin Plan on page IV-36.03.01 and states that "[C]*ompliance with the applicable water quality objectives, load allocations, and waste load allocations for diazinon and chlorpyrifos in the Delta Waterways is required by December 1, 2011.*"

(b) RPA Results. Section 1.3 of the SIP states, "The RWQCB shall conduct the analysis in this section for each priority pollutant with an applicable criterion or objective, *excluding priority pollutants for which a Total Maximum Daily Load (TMDL) has been developed*, to determine if a water quality-based effluent limitation is required in the discharger's permit." (*emphasis added*). Although a RPA is not required, all effluent and the receiving stream show no detection for either chlorpyrifos or diazinon.

(c) WQBELs. WQBELs for chlorpyrifos and diazinon are required based on the TMDL for diazinon and chlorpyrifos for the Delta . Therefore, this Order includes effluent limits calculated based on the waste load allocations contained in the TMDL, as follows:

Effluent chlorpyrifos and diazinon concentrations shall not exceed the sum of one as defined below:

i. Average Monthly Effluent Limit

$$S_{AMEL} = \frac{C_{D\text{-}avg}}{0.08} + \frac{C_{C\text{-}avg}}{0.012} \leq 1.0$$

$C_{D\text{-}avg}$ = average monthly diazinon effluent concentration in µg/L
$C_{C\text{-}avg}$ = average monthly chlorpyrifos effluent concentration in µg/L

ii. Maximum Daily Effluent Limit

$$S_{MDEL} = \frac{C_{D\text{-}max}}{0.16} + \frac{C_{C\text{-}max}}{0.025} \leq 1.0$$

$C_{D\text{-}max}$ = maximum daily diazinon effluent concentration in µg/L

$C_{C\text{-}max}$ = maximum daily chlorpyrifos effluent concentration in µg/L

(d) Plant Performance and Attainability. There is no expectation that diazinon and chlorpyrifos will be in the Facility's discharge because these pesticides have been banned. The Central Valley Water Board concludes that immediate compliance with these effluent limitations is feasible.

iii. Mercury

(a) WQO. The Basin Plan contains fish tissue objectives for all Delta waterways listed in Appendix 43 of the Basin Plan that states, "…the average methylmercury concentrations shall not exceed 0.08 and 0.24 mg methylmercury/kg, wet weight, in muscle tissue of trophic level 3 and 4 fish, respectively (150-500 mm total length). The average methylmercury concentrations shall not exceed 0.03 mg methylmercury/kg, wet weight, in whole fish less than 50 mm in length." The Delta Mercury Control Program contains aqueous methylmercury waste load allocations that are calculated to achieve the fish tissue objectives. Methylmercury reductions are assigned to discharges with concentrations of methylmercury greater than 0.06 ng/l (the concentration of methylmercury in water to meet the fish tissue objectives).

The CTR contains a human health criterion (based on a threshold dose level causing neurological effects in infants) of 50 ng/L for total mercury for waters from which both water and aquatic organisms are consumed. However, in 40 C.F.R Part 131, USEPA acknowledges that the human health criteria may not be protective of some aquatic or endangered species and that "…more stringent mercury limits may be determined and implemented through use of the State's narrative criterion." In the CTR, USEPA reserved the mercury criteria for freshwater and aquatic life and may adopt new criteria at a later date.

(b) RPA Results. Section 1.3 of the SIP states, "The RWQCB shall conduct the analysis in this section for each priority pollutant with an applicable criterion or objective, excluding priority pollutants for which a Total Maximum Daily Load (TMDL) has been developed, to determine if a water quality-based effluent limitation is required in the discharger's permit." (emphasis added) Although a RPA is not required, based on the available effluent and receiving water methylmercury data, it appears the discharge may be causing or contributing to an exceedance of the concentration of methylmercury in water to meet the site-specific fish tissue objectives in the Basin Plan. The maximum observed effluent methylmercury concentration was 0.037 ng/L, and the maximum ambient methylmercury concentration was 0.091 ng/L.

(c) WQBELs. The Basin Plan's Delta Mercury Control Program includes wasteload allocations for POTWs in the Delta, including for the Discharger. In accordance with 40 CFR 122.44(d)(1)(vii)(B) and the SIP. This Order contains final WQBELs for methylmercury based on the wasteload allocation. The total calendar annual methylmercury load shall not exceed 0.94 grams.

(d) Plant Performance and Attainability. Based on available effluent methylmercury data, the Central Valley Water Board finds the Discharger is unable to immediately comply with the final WQBELs for methylmercury. Therefore, a compliance schedule in accordance with the State Water Board's Compliance Schedule Policy and the Delta Mercury Control Program has been established in this Order.

iv. Nitrate and Nitrite

(a) WQO. DPH has adopted Primary MCLs for the protection of human health for the sum of nitrate and nitrite, measured as nitrogen, of 10 mg/L.

(b) RPA Results. The Facility is a POTW that treats domestic wastewater. Untreated domestic wastewater contains ammonia in concentrations that, if untreated, will be harmful to fish and will violate the Basin Plan's narrative toxicity objective. This Order, therefore, requires removal of ammonia (i.e., nitrification). Nitrification is a biological process that converts ammonia to nitrite and nitrate. Nitrate concentrations in a drinking water supply above the primary MCL threatens the health of human fetuses and newborn babies by reducing the oxygen-carrying capacity of the blood (methemoglobinemia). Reasonable potential therefore exists and WQBELs are required.

Federal regulations at 40 C.F.R. §122.44(d)(1)(i) requires that, "Limitations must control all pollutants or pollutant parameters (either conventional, nonconventional, or toxic pollutants) which the Director determines are or may be discharged at a level which will cause, have the reasonable potential to cause, or contribute to an excursion above any State water quality standard, including State narrative criteria for water quality." For priority pollutants, the SIP dictates the procedures for conducting the RPA. Nitrite and nitrate are not priority pollutants. Therefore, the Central Valley Water Board is not restricted to one particular RPA method. Due to the site-specific conditions of the discharge, the Central Valley Water Board has used its judgment in determining the appropriate method for conducting the RPA for this non-priority pollutant constituent.

USEPA's September 2010 NPDES Permit Writer's Manual, page 6-30, states, "State implementation procedures might allow, or even

require, a permit writer to determine reasonable potential through a qualitative assessment process without using available facility-specific effluent monitoring data or when such data are not available…A permitting authority might also determine that WQBELs are required for specific pollutants for all facilities that exhibit certain operational or discharge characteristics (e.g., WQBELs for pathogens in all permits for POTWs discharging to contact recreational waters)." USEPA's TSD also recommends that factors other than effluent data should be considered in the RPA, "When determining whether or not a discharge causes, has the reasonable potential to cause, or contributes to an excursion of a numeric or narrative water quality criterion for individual toxicants or for toxicity, the regulatory authority can use a variety of factors and information where facility-specific effluent monitoring data are unavailable. These factors also should be considered with available effluent monitoring data." With regard to POTWS, USEPA recommends that, "POTWs should also be characterized for the possibility of chlorine and ammonia problems." (TSD, p. 50)

The concentration of nitrogen in raw domestic wastewater is sufficiently high that the resultant treated wastewater has a reasonable potential to exceed or threaten to exceed the primary MCL for nitrate plus nitrite unless the wastewater is treated for nitrogen removal, and therefore an effluent limit for nitrate plus nitrite is required. Untreated domestic wastewater contains ammonia and this Order requires removal of ammonia (i.e., nitrification). Nitrification is a biological process that converts ammonia to nitrite and nitrite to nitrate. Denitrification is a process that converts nitrate to nitrite or nitric oxide and then to nitrous oxide or nitrogen gas, which is then released to the atmosphere. The Discharger currently uses nitrification/denitrification to remove ammonia, nitrite, and nitrate from the waste stream. Inadequate or incomplete denitrification may result in the discharge of nitrate and/or nitrite to the receiving stream. Discharges of nitrate plus nitrite in concentrations that exceed the primary MCL would violate the Basin Plan narrative chemical constituents objective. Although the Discharger denitrifies the discharge, inadequate or incomplete denitrification creates the potential for nitrate and nitrite to be discharged and provides the basis for the discharge to have a reasonable potential to cause or contribute to an in-stream excursion above the primary MCL. Therefore, the Central Valley Water Board finds the discharge has reasonable potential for nitrate plus nitrite and WQBELs are required.

(c) WQBELs. This Order contains a final average monthly effluent limitation for nitrate+nitrite of 10 mg/L based on the primary MCL. This effluent limitation is included in this Order to assure the treatment process adequately nitrifies and denitrifies the waste stream to protect the beneficial use of municipal and domestic supply.

(d) Plant Performance and Attainability. The Facility includes complete nitrification/denitrification. The Central Valley Water Board concludes, therefore, that immediate compliance with these effluent limitations is feasible.

v. Pathogens

(a) WQO. DPH has developed reclamation criteria, CCR, Division 4, Chapter 3 (Title 22), for the reuse of wastewater. Title 22 requires that for spray irrigation of food crops, parks, playgrounds, schoolyards, and other areas of similar public access, wastewater be adequately disinfected, oxidized, coagulated, clarified, and filtered, and that the effluent total coliform levels not exceed 2.2 MPN/100 mL as a 7-day median.

Title 22 also requires that recycled water used as a source of water supply for non-restricted recreational impoundments be disinfected tertiary recycled water that has been subjected to conventional treatment. A non-restricted recreational impoundment is defined as "*…an impoundment of recycled water, in which no limitations are imposed on body-contact water recreational activities.*" Title 22 is not directly applicable to surface waters; however, the Central Valley Water Board finds that it is appropriate to apply an equivalent level of treatment to that required by the DPH's reclamation criteria because the receiving water is used for irrigation of agricultural land and for contact recreation purposes. The stringent disinfection criteria of Title 22 are appropriate since the undiluted effluent may be used for the irrigation of food crops and/or for body-contact water recreation. Coliform organisms are intended as an indicator of the effectiveness of the entire treatment train and the effectiveness of removing other pathogens.

(b) RPA Results. Raw domestic wastewater inherently contains human pathogens that threaten human health, and constitute a threatened pollution and nuisance under CWC Section 13050 if discharged untreated to the receiving water. Reasonable potential therefore exists and WQBELs are required.

Federal regulations at 40 C.F.R. §122.44(d)(1)(i) requires that, "*Limitations must control all pollutants or pollutant parameters (either conventional, nonconventional, or toxic pollutants) which the Director determines are or may be discharged at a level which will cause, have the reasonable potential to cause, or contribute to an excursion above any State water quality standard, including State narrative criteria for water quality.*" For priority pollutants, the SIP dictates the procedures for conducting the RPA. Pathogens are not priority pollutants. Therefore, the Central Valley Water Board is not restricted to one particular RPA method. Due to the site-specific conditions of the

discharge, the Central Valley Water Board has used its judgment in determining the appropriate method for conducting the RPA for this non-priority pollutant constituent.

USEPA's September 2010 NPDES Permit Writer's Manual, page 6-30, states, "*State implementation procedures might allow, or even require, a permit writer to determine reasonable potential through a qualitative assessment process without using available facility-specific effluent monitoring data or when such data are not available…A permitting authority might also determine that WQBELs are required for specific pollutants for all facilities that exhibit certain operational or discharge characteristics (e.g., WQBELs for pathogens in all permits for POTWs discharging to contact recreational waters).*" USEPA's TSD also recommends that factors other than effluent data should be considered in the RPA, "*When determining whether or not a discharge causes, has the reasonable potential to cause, or contributes to an excursion of a numeric or narrative water quality criterion for individual toxicants or for toxicity, the regulatory authority can use a variety of factors and information where facility-specific effluent monitoring data are unavailable. These factors also should be considered with available effluent monitoring data.*" (TSD, p. 50)

The beneficial uses of the Delta include municipal and domestic supply, water contact recreation, and agricultural irrigation supply, and there is, at times, less than 20:1 dilution. To protect these beneficial uses, the Central Valley Water Board finds that the wastewater must be disinfected and adequately treated to prevent disease. Although the Discharger provides disinfection, inadequate or incomplete disinfection creates the potential for pathogens to be discharged and provides the basis for the discharge to have a reasonable potential to cause or contribute to an exceedance of the Basin Plan's narrative toxicity objective. Therefore, the Central Valley Water Board finds the discharge has reasonable potential for pathogens and WQBELs are required.

(c) WQBELs. The method of treatment is not prescribed by this Order; however, wastewater must be treated to a level equivalent to that recommended by DPH. In accordance with the requirements of Title 22, this Order includes effluent limitations for total coliform organisms of 2.2 MPN/100 mL as a 7-day median; 23 MPN/100 mL, not to be exceeded more than once in a 30-day period; and 240 MPN/100 mL as an instantaneous maximum.

In addition to coliform limitations, turbidity operational specifications have been included as a second indicator of the effectiveness of the treatment process and to assure compliance with the required level of treatment. The tertiary treatment process, or equivalent, is capable of

reliably meeting a turbidity limitation of 2 nephelometric turbidity units (NTU) as a daily average. Failure of the filtration system such that virus removal is impaired would normally result in increased particles in the effluent, which result in higher effluent turbidity. Turbidity has a major advantage for monitoring filter performance, allowing immediate detection of filter failure and rapid corrective action. Coliform testing, by comparison, is not conducted continuously and requires several hours, to days, to identify high coliform concentrations. Therefore, to ensure compliance with DPH recommended Title 22 disinfection criteria, weekly average effluent limitations are impracticable for turbidity. This Order includes effluent limitations for turbidity of 2 NTU as a daily average; 5 NTU, not to be exceeded more than 5% of the time within a 24-hour period; and 10 NTU as an instantaneous maximum.

The tertiary treatment process, or equivalent, is capable of reliably treating wastewater to a turbidity level of 2 nephelometric turbidity units (NTU) as a daily average. Failure of the filtration system such that virus removal is impaired would normally result in increased particles in the effluent, which result in higher effluent turbidity. Turbidity has a major advantage for monitoring filter performance. Coliform testing, by comparison, is not conducted continuously and requires several hours, to days, to identify high coliform concentrations. Therefore, to ensure compliance with the DPH recommended Title 22 disinfection criteria, weekly average specifications are impracticable for turbidity. This Order includes operational specifications for turbidity of 2 NTU as a daily average; 5 NTU, not to be exceeded more than 5 percent of the time within a 24-hour period; and 10 NTU as an instantaneous maximum.

Final WQBELs for BOD_5 and TSS are based on the technical capability of the tertiary process, which is necessary to protect the beneficial uses of the receiving water. BOD_5 is a measure of the amount of oxygen used in the biochemical oxidation of organic matter. The tertiary treatment standards for BOD_5 and TSS are indicators of the effectiveness of the tertiary treatment process. The principal design parameter for wastewater treatment plants is the daily BOD_5 and TSS loading rates and the corresponding removal rate of the system. The application of tertiary treatment processes results in the ability to achieve lower levels for BOD_5 and TSS than the secondary standards currently prescribed. Therefore, this Order requires AMELs for BOD_5 and TSS of 10 mg/L, which is technically based on the capability of a tertiary system. In addition to the average weekly and average monthly effluent limitations, a daily maximum effluent limitation for BOD_5 and TSS is included in the Order to ensure that the treatment works are not organically overloaded and operate in accordance with design capabilities.

(d) This Order contains effluent limitations for BOD_5, total coliform organisms, and TSS and requires a tertiary level of treatment, or equivalent, necessary to protect the beneficial uses of the receiving water. The Central Valley Water Board has previously considered the factors in Water Code section 13241 in establishing these requirements.

vi. pH

(a) WQO. The Basin Plan includes a water quality objective for surface waters (except for Goose Lake) that the *"…pH shall not be depressed below 6.5 nor raised above 8.5. Changes in normal ambient pH levels shall not exceed 0.5 in fresh waters with designated COLD or WARM beneficial uses.*"

(b) RPA Results. Raw domestic wastewater inherently has variable pH that if not properly controlled would violate the Basin Plan's numeric objective for pH in the receiving water Therefore, reasonable potential exists and WQBELs for pH are required.

Federal regulations at 40 C.F.R. §122.44(d)(1)(i) requires that, "*Limitations must control all pollutants or pollutant parameters (either conventional, nonconventional, or toxic pollutants) which the Director determines are or may be discharged at a level which will cause, have the reasonable potential to cause, or contribute to an excursion above any State water quality standard, including State narrative criteria for water quality.*" For priority pollutants, the SIP dictates the procedures for conducting the RPA. pH is not a priority pollutant. Therefore, the Central Valley Water Board is not restricted to one particular RPA method. Due to the site-specific conditions of the discharge, the Central Valley Water Board has used its judgment in determining the appropriate method for conducting the RPA for this non-priority pollutant constituent.

USEPA's September 2010 NPDES Permit Writer's Manual, page 6-30, states, "*State implementation procedures might allow, or even require, a permit writer to determine reasonable potential through a qualitative assessment process without using available facility-specific effluent monitoring data or when such data are not available…A permitting authority might also determine that WQBELs are required for specific pollutants for all facilities that exhibit certain operational or discharge characteristics (e.g., WQBELs for pathogens in all permits for POTWs discharging to contact recreational waters).*" USEPA's TSD also recommends that factors other than effluent data should be considered in the RPA, "*When determining whether or not a discharge causes, has the reasonable potential to cause, or contributes to an excursion of a numeric or narrative water quality criterion for individual toxicants or for toxicity, the regulatory authority can use a variety of*

factors and information where facility-specific effluent monitoring data are unavailable. These factors also should be considered with available effluent monitoring data." (TSD, p. 50)

The Facility is a POTW that treats domestic wastewater. Although the Discharger has proper pH controls in place, the pH for the Facility's influent varies due to the nature of municipal sewage, which provides the basis for the discharge to have a reasonable potential to cause or contribute to an in-stream excursion above the Basin Plan's numeric objective for pH in the receiving water. Therefore, WQBELs for pH are required in this Order.

(c) WQBELs. Effluent limitations for pH of 6.5 as an instantaneous minimum and 8.5 as an instantaneous maximum are included in this Order based on protection of the Basin Plan objectives for pH.

(d) Plant Performance and Attainability. Analysis of the effluent data shows the pH always remains within 6.5 to 8.5. The Central Valley Water Board concludes, therefore, that immediate compliance with these effluent limitations is feasible.

vii. Salinity

(a) WQO. The Basin Plan contains a chemical constituent objective that incorporates state MCLs, contains a narrative objective, and contains numeric water quality objectives for certain specified water bodies for electrical conductivity, total dissolved solids, sulfate, and chloride. The USEPA Ambient Water Quality Criteria for Chloride recommends acute and chronic criteria for the protection of aquatic life. There are no USEPA water quality criteria for the protection of aquatic life for electrical conductivity, total dissolved solids, and sulfate. Additionally, there are no USEPA numeric water quality criteria for the protection of agricultural, livestock, and industrial uses. Numeric values for the protection of these uses are typically based on site specific conditions and evaluations to determine the appropriate constituent threshold necessary to interpret the narrative chemical constituent Basin Plan objective. The Central Valley Water Board must determine the applicable numeric limit to implement the narrative objective for the protection of agricultural supply. The Central Valley Water Board is currently implementing the CV-SALTS initiative to develop a Basin Plan Amendment that will establish a salt and nitrate Management Plan for the Central Valley. Through this effort the Basin Plan will be amended to define how the narrative water quality objective is to be interpreted for the protection of agricultural use. All studies conducted through this Order to establish an agricultural limit to implement the narrative objective will be reviewed by and consistent with the efforts currently underway by CV-SALTS.

Table F-14. Salinity Water Quality Criteria/Objectives

Parameter	Secondary MCL[3]	Bay-Delta Plan	USEPA NAWQC	Effluent	
				Average	Maximum
EC (µmhos/cm)	900, 1600, 2200	450[1]	--	**673**	**750**
TDS (mg/L)	500, 1000, 1500	--	--	**416**	**490**
Sulfate (mg/L)	250, 500, 600	--	--	**26**	**28**
Chloride (mg/L)	250, 500, 600	--	860 1-hr 230 4-day	**64**	**73**

[1] Maximum 14-day running average from 1 April to 15 August, applicable South Fork Mokelumne River at Terminous.

(1) Chloride. The secondary MCL for chloride is 250 mg/L, as a recommended level, 500 mg/L as an upper level, and 600 mg/L as a short-term maximum. USEPA Ambient Water Quality Criteria for Chloride recommends acute (1-hour) and chronic (4-day) criteria for the protection of freshwater aquatic life of 860 mg/L and 230 mg/L, respectively.

(2) Electrical Conductivity. The secondary MCL for EC is 900 µmhos/cm as a recommended level, 1600 µmhos/cm as an upper level, and 2200 µmhos/cm as a short-term maximum.

The Bay-Delta Plan includes water quality objectives for EC for the Delta. The nearest location where Bay-Delta Plan water quality objectives have been established is at the South Fork Mokelumne River at Terminous. The EC water quality objectives are for the protection of the Agricultural beneficial use. The water quality objectives are a 14-day running average EC of 450 µmhos/cm from 1 April – 15 August in all water year types[14] except critical. The EC objectives are not applicable during critical water years. The Facility rarely discharges to Dredger Cut during this period, therefore, the EC objectives are not applicable to the discharge.

(3) Sulfate. The secondary MCL for sulfate is 250 mg/L as a recommended level, 500 mg/L as an upper level, and 600 mg/L as a short-term maximum.

(4) Total Dissolved Solids. The secondary MCL for TDS is 500 mg/L as a recommended level, 1000 mg/L as an upper level, and 1500 mg/L as a short-term maximum.

[14] The Sacramento Valley 40-30-30 water year hydrologic classification index applies for determinations of water year type.

(b) RPA Results.

(1) Chloride. Chloride concentrations in the effluent ranged from 59 mg/L to 73 mg/L, with an average of 64 mg/L. These levels do not exceed the Secondary MCL chloride limit of 250 mg/L. Background concentrations in Dredger Cut ranged from 8 mg/L to 53 mg/L, with an average of 21 mg/L, for 7 samples collected by the Discharger from January 2009 through December 2011.

(2) Electrical Conductivity. A review of the Discharger's monitoring reports shows an average effluent EC of 673 µmhos/cm, with a range from 550 µmhos/cm to 750 µmhos/cm. These levels do not exceed the Secondary MCL EC limit of 900. The background receiving water EC averaged 293 µmhos/cm.

(3) Sulfate. Sulfate concentrations in the effluent ranged from 24 mg/L to 28 mg/L, with an average of 26 mg/L. These levels do not exceed the secondary MCL. Background concentrations in Dredger Cut ranged from 5 mg/L to 13 mg/L, with an average of 8 mg/L.

(4) Total Dissolved Solids. The average TDS effluent concentration was 416 mg/L with concentrations ranging from 370 mg/L to 490 mg/L. These levels do not exceed the Secondary MCL TDS limit of 500. The background receiving water TDS ranged from 45 mg/L to 360 mg/L, with an average of 168 mg/L.

(c) WQBELs. Based on the low reported salinity, the discharge does not have reasonable potential to cause or contribute to an in-stream excursion of water quality objectives for salinity. However, since the Discharger discharges to Dredger Cut, within the Sacramento-San Joaquin Delta, of additional concern is the salt contribution to Delta waters. Allowing the Discharger to increase its current salt loading may be contrary to the Region-wide effort to address salinity in the Central Valley. Therefore, this Order includes a performance-based effluent limitation of 727 µmhos/cm for EC to be applied as an annual average to limit the discharge to current levels. This performance-based effluent limitation represents the maximum annual average effluent EC concentration for a calendar year using data from January 2009 through December 2011. The maximum annual average of 706 µmhos/cm occurred during the year 2011.

In order to ensure that the Discharger will continue to control the discharge of salinity, this Order includes a requirement to develop and implement a salinity evaluation and minimization plan. Also water supply monitoring is required to evaluate the relative contribution of salinity from the source water to the effluent.

4. WQBEL Calculations

a. This Order includes WQBELs for **ammonia, nitrate+nitrite, diazinon, chlorpyrifos, methylmercury, pH, and total coliform organisms.** The general methodology for calculating WQBELs based on the different criteria/objectives is described in subsections IV.C.4.b through e, below. See Attachment H for the WQBEL calculations.

b. Effluent Concentration Allowance. For each water quality criterion/objective, the ECA is calculated using the following steady-state mass balance equation from Section 1.4 of the SIP:

$$ECA = C + D(C - B) \quad \text{where } C>B, \text{ and}$$
$$ECA = C \quad \text{where } C \leq B$$

where:

ECA = effluent concentration allowance
D = dilution credit
C = the priority pollutant criterion/objective
B = the ambient background concentration.

According to the SIP, the ambient background concentration (B) in the equation above shall be the observed maximum with the exception that an ECA calculated from a priority pollutant criterion/objective that is intended to protect human health from carcinogenic effects shall use the arithmetic mean concentration of the ambient background samples. For ECAs based on MCLs, which implement the Basin Plan's chemical constituents objective and are applied as annual averages, an arithmetic mean is also used for B due to the long-term basis of the criteria.

c. Basin Plan Objectives and MCLs. For WQBELs based on site-specific numeric Basin Plan objectives or MCLs, the effluent limitations are applied directly as the ECA as either an MDEL, AMEL, or average annual effluent limitations, depending on the averaging period of the objective.

d. Aquatic Toxicity Criteria. WQBELs based on acute and chronic aquatic toxicity criteria are calculated in accordance with Section 1.4 of the SIP. The ECAs are converted to equivalent long-term averages (i.e. LTAacute and LTAchronic) using statistical multipliers and the lowest LTA is used to calculate the AMEL and MDEL using additional statistical multipliers.

e. Human Health Criteria. WQBELs based on human health criteria, are also calculated in accordance with Section 1.4 of the SIP. The ECAs are set equal to the AMEL and a statistical multiplier was used to calculate the MDEL.

LTA_{acute}

$$AMEL = mult_{AMEL}\left[\min\left(M_A ECA_{acute}, M_C ECA_{chronic}\right)\right]$$

$$MDEL = mult_{MDEL}\left[\min\left(M_A ECA_{acute}, \underbrace{M_C ECA_{chronic}}_{LTA_{chronic}}\right)\right]$$

$$MDEL_{HH} = \left(\frac{mult_{MDEL}}{mult_{AMEL}}\right) AMEL_{HH}$$

where:

$mult_{AMEL}$ = statistical multiplier converting minimum LTA to AMEL
$mult_{MDEL}$ = statistical multiplier converting minimum LTA to MDEL
M_A = statistical multiplier converting acute ECA to LTA_{acute}
M_C = statistical multiplier converting chronic ECA to $LTA_{chronic}$

Summary of Water Quality-Based Effluent Limitations
Discharge Point No. 001

Table F-15. Summary of Water Quality-Based Effluent Limitations

Parameter	Units	Effluent Limitations				
		Average Monthly	Average Weekly	Maximum Daily	Instantaneous Minimum	Instantaneous Maximum
Ammonia (as N)	mg/L	1.3	--	4.3	--	--
	lbs/day	92.2	--	305	--	--
Nitrate + Nitrite (as N)	mg/L	10			--	--
Total Coliform Organisms[2]	MPN/100 ml	--	--	--	--	--
pH	Standard Units	--	--	--	6.5	8.5
Methylmercury[6]	grams	--	--	--	--	--
Diazinon and Chlorpyrifos	µg/L	[7]	--	[8]	--	--

1. Based on an average dry weather flow permitted flow of 8.5 mgd. Mass limits effective immediately.
2. Effluent total coliform also shall not exceed i.) 2.2 MPN/100ml, as a 7-day median; ii). 23 MPN/100ml, more than once in any 30-day period, And iii) 240 MPN/100mL at any time.
3. Effluent turbidity also shall not exceed i.) 2 NTU as a daily average; and ii.) 5 NTU, more than 5% of the time within a 24-hour period.
4. Applied as a 4-day average effluent limitation.
5. Applied as a 1-hour average effluent limitation.
6. Total calendar annual load of methylmercury shall not exceed 0.94 grams.
7. $S_{AMEL} = \frac{C_{D-avg}}{0.079} + \frac{C_{C-avg}}{0.012} \leq 1.0$

   C_{D-avg} = average monthly diazinon effluent concentration in µg/L
   C_{C-avg} = average monthly chlorpyrifos effluent concentration in µg/L
8. $S_{MDEL} = \frac{C_{D-max}}{0.16} + \frac{C_{C-max}}{0.025} \leq 1.0$

5. Whole Effluent Toxicity (WET)

For compliance with the Basin Plan's narrative toxicity objective, this Order requires the Discharger to conduct whole effluent toxicity testing for acute and chronic toxicity, as specified in the Monitoring and Reporting Program (Attachment E section V.). This Order also contains effluent limitations for acute toxicity and requires the Discharger to implement best management practices to investigate the causes of, and identify corrective actions to reduce or eliminate effluent toxicity.

a. Acute Aquatic Toxicity. The Basin Plan contains a narrative toxicity objective that states, "All waters shall be maintained free of toxic substances in concentrations that produce detrimental physiological responses in human, plant, animal, or aquatic life." (Basin Plan at page III-8.00 for discharges in the Sac/SJ Basins). The Basin Plan also states that, "…effluent limits based upon acute biotoxicity tests of effluents will be prescribed where appropriate…".

For priority pollutants, the SIP dictates the procedures for conducting the RPA. Acute toxicity is not a priority pollutant. Therefore, the Central Valley Water Board is not restricted to one particular RPA method. Due to the site-specific conditions of the discharge, the Central Valley Water Board has used its judgment in determining the appropriate method for conducting the RPA for this non-priority pollutant constituent. USEPA's September 2010 NPDES Permit Writer's Manual, page 6-30, states, "*State implementation procedures might allow, or even require, a permit writer to determine reasonable potential through a qualitative assessment process without using available facility-specific effluent monitoring data or when such data are not available…A permitting authority might also determine that WQBELs are required for specific pollutants for all facilities that exhibit certain operational or discharge characteristics (e.g., WQBELs for pathogens in all permits for POTWs discharging to contact recreational waters).*" Although the discharge has been consistently in compliance with the acute effluent limitations, the Facility is a POTW that treats domestic wastewater containing ammonia and other acutely toxic pollutants. Acute toxicity effluent limits are required to ensure compliance with the Basin Plan's narrative toxicity objective.

USEPA Region 9 provided guidance for the development of acute toxicity effluent limitations in the absence of numeric water quality objectives for toxicity in its document titled "Guidance for NPDES Permit Issuance", dated February 1994. In section B.2. "Toxicity Requirements" (pgs. 14-15) it states that, "In the absence of specific numeric water quality objectives for acute and chronic toxicity, the narrative criterion 'no toxics in toxic amounts' applies. Achievement of the narrative criterion, as applied herein, means that ambient waters shall not demonstrate for acute toxicity: 1) less than 90% survival, 50% of the time, based on the monthly median, or 2) less than 70% survival, 10% of the time, based on any monthly median. Accordingly, effluent limitations for acute toxicity have been included in this Order as follows:

Acute Toxicity. Survival of aquatic organisms in 96-hour bioassays of undiluted waste shall be no less than:

Minimum for any one bioassay---------- 70%
Median for any three consecutive bioassays---------- 90%

b. Chronic Aquatic Toxicity. The Basin Plan contains a narrative toxicity objective that states, "*All waters shall be maintained free of toxic substances in concentrations that produce detrimental physiological responses in human, plant, animal, or aquatic life.*" (Basin Plan at page III-8.00.) Based on chronic WET testing performed by the Discharger from November 2007 through November 2011, the discharge has reasonable potential to cause or contribute to an in-stream excursion above of the Basin Plan's narrative toxicity objective. As shown in Table F-9 below.

Table F-16: Whole Effluent Chronic Toxicity Testing Results

Date	**Fathead Minnow**		**Water Flea**		**Green Algae**
	Pimephales promelas		*Ceriodaphnia dubia*		*Selenastrum capricornutum*
	Survival (TUc)	Growth (TUc)	Survival (TUc)	Reproduction (TUc)	Growth (TUc)
11/05/07	1	1	1	1	1
1/08/08	1	2	1	1	1
4/08/07	1	1	1	1	1.1
12/02/08	1	1	1	1	1
3/03/09	1	4	1	1.3	2
11/17/09	1	1	1	1	1
3/07/10	1	1	1	8	1
12/07/10	1	1	1	1	1
3/15/11	1	1	1	1	1
5/10/11	1	1	1	1	1
11/15/11	1	1	1	1	1

No dilution has been granted for the chronic condition. Therefore, chronic toxicity testing results exceeding 1 chronic toxicity unit (TUc) demonstrates the discharge has a reasonable potential to cause or contribute to an exceedance of the Basin Plan's narrative toxicity objective. On 3 March 2009 toxicity was recorded for *Pimephales promelas* growth, *Ceriodaphnia dubia* reproduction, and *Selenastrum capricornutum* growth. Accelerated testing for March 2009 was completed without additional results exceeding the numeric toxicity trigger, which demonstrates there was not pattern of toxicity and additional measures were not necessary. On 7 March 2010 toxicity was recorded for *Ceriodaphnia dubia* reproduction. Accelerated testing for March 2009 was completed again without additional results exceeding the trigger.

Numeric chronic WET effluent limitations have not been included in this Order. The SIP contains implementation gaps regarding the appropriate form and implementation of chronic toxicity limits. This has resulted in the petitioning of a

NPDES permit in the Los Angeles Region[15] that contained numeric chronic toxicity effluent limitations. To address the petition, the State Water Board adopted WQO 2003-012 directing its staff to revise the toxicity control provisions in the SIP. The State Water Board states the following in WQO 2003-012, "*In reviewing this petition and receiving comments from numerous interested persons on the propriety of including numeric effluent limitations for chronic toxicity in NPDES permits for publicly-owned treatment works that discharge to inland waters, we have determined that this issue should be considered in a regulatory setting, in order to allow for full public discussion and deliberation. We intend to modify the SIP to specifically address the issue. We anticipate that review will occur within the next year. We therefore decline to make a determination here regarding the propriety of the final numeric effluent limitations for chronic toxicity contained in these permits."* The process to revise the SIP is currently underway. Proposed changes include clarifying the appropriate form of effluent toxicity limits in NPDES permits and general expansion and standardization of toxicity control implementation related to the NPDES permitting process. Since the toxicity control provisions in the SIP are under revision it is infeasible to develop numeric effluent limitations for chronic toxicity. Therefore, this Order requires that the Discharger meet best management practices for compliance with the Basin Plan's narrative toxicity objective, as allowed under 40 CFR 122.44(k).

To ensure compliance with the Basin Plan's narrative toxicity objective, the Discharger is required to conduct chronic WET testing, as specified in the Monitoring and Reporting Program (Attachment E section V.). Furthermore, the Special Provision contained at VI.C.2.a. of this Order requires the Discharger to investigate the causes of, and identify and implement corrective actions to reduce or eliminate effluent toxicity. If the discharge demonstrates toxicity exceeding the numeric toxicity monitoring trigger, the Discharger is required to initiate a Toxicity Reduction Evaluation (TRE) in accordance with an approved TRE workplan. The numeric toxicity monitoring trigger is not an effluent limitation; it is the toxicity threshold at which the Discharger is required to perform accelerated chronic toxicity monitoring, as well as, the threshold to initiate a TRE if effluent toxicity has been demonstrated.

D. Final Effluent Limitations

1. Mass-based Effluent Limitations

40 CFR 122.45(f)(1) requires effluent limitations be expressed in terms of mass, with some exceptions, and 40 CFR 122.45(f)(2) allows pollutants that are limited in

[15] In the Matter of the Review of Own Motion of Waste Discharge Requirements Order Nos. R4-2002-0121 [NPDES No. CA0054011] and R4-2002-0123 [NPDES NO. CA0055119] and Time Schedule Order Nos. R4-2002-0122 and R4-2002-0124 for Los Coyotes and Long Beach Wastewater Reclamation Plants Issued by the California Regional Water Quality Control Board, Los Angeles Region SWRCB/OCC FILES A-1496 AND 1496(a)

terms of mass to additionally be limited in terms of other units of measurement. This Order includes effluent limitations expressed in terms of mass and concentration. In addition, pursuant to the exceptions to mass limitations provided in 40 CFR 122.45(f)(1), some effluent limitations are not expressed in terms of mass, such as pH, and when the applicable standards are expressed in terms of concentration (e.g., CTR criteria and MCLs) and mass limitations are not necessary to protect the beneficial uses of the receiving water.

Mass-based effluent limitations were calculated based upon the design flow (Average Dry Weather Flow) permitted in section IV.A.1.g. of this Order.

2. Averaging Periods for Effluent Limitations

40 CFR 122.45 (d) requires average weekly and average monthly discharge limitations for publicly owned treatment works (POTWs) unless impracticable. However, for toxic pollutants and pollutant parameters in water quality permitting, USEPA recommends the use of a maximum daily effluent limitation in lieu of average weekly effluent limitations for two reasons. "*First, the basis for the 7-day average for POTWs derives from the secondary treatment requirements. This basis is not related to the need for assuring achievement of water quality standards. Second, a 7-day average, which could comprise up to seven or more daily samples, could average out peak toxic concentrations and therefore the discharge's potential for causing acute toxic effects would be missed.*" (TSD, pg. 96) This Order uses maximum daily effluent limitations in lieu of average weekly effluent limitations for ammonia as recommended by the TSD for the achievement of water quality standards and for the protection of the beneficial uses of the receiving stream. Furthermore, for pH, total coliform organisms, and total residual chlorine, weekly average effluent limitations have been replaced or supplemented with effluent limitations utilizing shorter averaging periods. The rationale for using shorter averaging periods for these constituents is discussed in section IV.C.3 of this Fact Sheet.

For effluent limitations based on Primary and Secondary MCLs, except nitrate and nitrite, this Order includes annual average effluent limitations. The Primary and Secondary MCLs are drinking water standards contained in Title 22 of the California Code of Regulations. Title 22 requires compliance with these standards on an annual average basis (except for nitrate and nitrite), when sampling at least quarterly. Since it is necessary to determine compliance on an annual average basis, it is impracticable to calculate average weekly and average monthly effluent limitations.

3. Satisfaction of Anti-Backsliding Requirements

The Clean Water Act specifies that a revised permit may not include effluent limitations that are less stringent than the previous permit unless a less stringent limitation is justified based on exceptions to the anti-backsliding provisions contained in Clean Water Act sections 402(o) or 303(d)(4), or, where applicable, 40 CFR 122.44(l).

The effluent limitations in this Order are at least as stringent as the effluent limitations in Order R5-2007-0113, with the exception of effluent limitations for aluminum, dibromochloromethane, dichlorobromomethane, manganese and nitrite (as N). This relaxation of effluent limitations is consistent with the anti-backsliding requirements of the CWA and federal regulations.

a. CWA section 402(o)(1) and 303(d)(4). CWA section 402(o)(1) specifies that, in the case of effluent limitations established on the basis of CWA section 301(b)(1)(C) (i.e., WQBELs), a permit may not be renewed, reissued, or modified to contain effluent limitations which are less stringent than the comparable effluent limitations in the previous permit except in compliance with CWA section 303(d)(4). The effluent limitations for aluminum, dibromochloromethane, dichlorobromomethane, manganese and nitrite (as N) established in Order R5-2007-0113 are WQBELs and may be relaxed if the requirements of CWA section 303(d)(4) are satisfied.

CWA section 303(d)(4) has two parts: paragraph (A) which applies to nonattainment waters and paragraph (B) which applies to attainment waters.

i. For waters where standards are not attained, CWA section 304(d)(4)(A) specifies that any effluent limit based on a TMDL or other WLA may be revised only if the cumulative effect of all such revised effluent limits based on such TMDLs or WLAs will assure the attainment of such water quality standards. The 303(d) listings applicable to the Dredger Cut, as described in section III.D.1 of this Fact Sheet, include dissolved oxygen and group A pesticides. TMDLs and WLAs for dissolved oxygen and pesticides have not been adopted. Monitoring data indicates the Facility will not contribute to exceedances of the water quality standards for dissolved oxygen and pesticides. Additionally, this Order retains receiving water limitations for dissolved oxygen and pesticides which will assure the Facility will not contribute to exceedances of applicable water quality standards for aforementioned pollutants.

ii. For attainment waters, CWA section 303(d)(4)(B) specifies that a limitation based on a water quality standard may be relaxed where the action is consistent with the antidegradation policy. The 303(d) listings for the receiving water, as described in section III.D.1 of this Fact Sheet, do not include aluminum, dibromochloromethane, dichlorobromomethane, manganese and nitrite (as N). Thus the receiving water is an attainment water for these constituents[16]. The removal or relaxation of WQBELs for aluminum, dibromochloromethane, dichlorobromomethane, manganese and nitrite (as N) is consistent with CWA sections 402(o)(1) and 303(d)(4) and, as described in section

[16] "*The exceptions in Section 303(d)(4) address both waters in attainment with water quality standards and those not in attainment, i.e. waters on the section 303(d) impaired waters list.*" State Water Board Order WQ 2008-0006, Berry Petroleum Company, Poso Creek/McVan Facility.

IV.D.4 of this Fact Sheet, the antidegradation provisions of 40 CFR 131.12 and State Water Board Resolution No. 68-16. Therefore, the modifications to these effluent limitations do not violate anti-backsliding requirements.

b. **CWA section 402(o)(2).** CWA section 402(o)(2) provides several exceptions to the anti-backsliding regulations. CWA 402(o)(2)(B)(i) allows a renewed, reissued, or modified permit to contain a less stringent effluent limitation for a pollutant if information is available which was not available at the time of permit issuance (other than revised regulations, guidance, or test methods) and which would have justified the application of a less stringent effluent limitation at the time of permit issuance.

As described further in section IV.C.3.b of this Fact Sheet, updated information that was not available at the time Order R5-2007-0113 was issued indicates that aluminum, dibromochloromethane, dichlorobromomethane, manganese and nitrite (as N) do not exhibit reasonable potential to cause or contribute to an exceedance of water quality objectives in the receiving water. The updated information that supports the relaxation of effluent limitations for these constituents includes the following:

i. **Aluminum.** Based on tertiary effluent data for aluminum, the discharge does not demonstrate reasonable potential to cause or contribute to an exceedance of the secondary MCL or the narrative toxicity objective.

ii. **Chlorodibromomethane (CDBM) and Dichlorobromomethane (DCBM).** CDBM and DCBM are products of the disinfection process with chlorine. Construction of tertiary and Ultraviolet Light (UV) disinfection treatment processes in January 2005 eliminated the use of chlorine for effluent disinfection. Since that time CDBM and DCBM have not been detected in the effluent, which results in a finding of no reasonable potential to cause or contribute to an exceedance of the CTR human health criteria.

iii. **Manganese**. Neither the effluent nor the receiving water exceed the applicable water quality objective for manganese of 50 µg/L and thus there is no demonstrable reasonable potential for manganese to cause or contribute to an exceedance of the secondary MCL or site-specific objective for the Delta.

iv. **Nitrite**. The effluent has demonstrated consistently non-detect for nitrite, which results in a finding of no reasonable potential to cause or contribute to an exceedance of the primary MCL.

Thus, removal or relaxation of the effluent limitations for aluminum, dibromochloromethane, dichlorobromomethane, manganese and nitrite (as N) from Order R5-2007-0113 is in accordance with CWA section 402(o)(2)(B)(i),

which allows for the removal of effluent limitations based on information that was not available at the time of permit issuance.

4. Satisfaction of Antidegradation Policy

This Order does not allow for an increase in flow or mass of pollutants to the receiving water. Therefore, a complete antidegradation analysis is not necessary. The Order requires compliance with applicable federal technology-based standards and with WQBELs where the discharge could have the reasonable potential to cause or contribute to an exceedance of water quality standards. The permitted discharge is consistent with the antidegradation provisions of 40 CFR 131.12 and State Water Board Resolution No. 68-16. Compliance with these requirements will result in the use of best practicable treatment or control of the discharge. The impact on existing water quality will be insignificant.

The permitted surface water discharge is consistent with the antidegradation provisions of 40 CFR 131.12 and State Water Board Resolution No. 68-16. Compliance with these requirements will result in the use of best practicable treatment or control of the discharge. The impact on existing water quality will be insignificant.

5. Stringency of Requirements for Individual Pollutants

This Order contains both technology-based effluent limitations and WQBELs for individual pollutants. The technology-based effluent limitations consist of restrictions on BOD_5, TSS and flow. The WQBELs consist of restrictions on total coliform organisms, turbidity, pH, ammonia, nitrate+nitrite (as N), mercury, methylmercury, total residual chlorine, electrical conductivity, acute toxicity and chronic toxicity. This Order's technology-based pollutant restrictions implement the minimum, applicable federal technology-based requirements. In addition, this Order includes new effluent limitations for chronic toxicity to meet numeric objectives or protect beneficial uses.

WQBELs have been scientifically derived to implement water quality objectives that protect beneficial uses. Both the beneficial uses and the water quality objectives have been approved pursuant to federal law and are the applicable federal water quality standards. To the extent that toxic pollutant WQBELs were derived from the CTR, the CTR is the applicable standard pursuant to 40 CFR 131.38. The scientific procedures for calculating the individual WQBELs for priority pollutants are based on the CTR-SIP, which was approved by USEPA on 18 May 2000. All beneficial uses and water quality objectives contained in the Basin Plan were approved under state law and submitted to and approved by USEPA prior to 30 May 2000. Any water quality objectives and beneficial uses submitted to USEPA prior to 30 May 2000, but not approved by USEPA before that date, are nonetheless "applicable water quality standards for purposes of the CWA" pursuant to 40 CFR 131.21(c)(1). Collectively, this Order's restrictions on individual pollutants are no more stringent than required to implement the requirements of the CWA.

This Order contains pollutant restrictions that are more stringent than applicable federal requirements and standards. Specifically, this Order includes tertiary effluent limitations for BOD5, TSS and total coliform organisms that are more stringent than applicable federal standards, but that are nonetheless necessary to meet numeric objectives or protect beneficial uses. The rationale for including these limitations is explained in section IV.C.3.c of this Fact Sheet.

Summary of Final Effluent Limitations
Discharge Point No. EFF-001

Table F-17. Summary of Final Effluent Limitations

Parameter	Units	Effluent Limitations					Basis
		Average Monthly	Average Weekly	Maximum Daily	Instantaneous Minimum	Instantaneous Maximum	
Biochemical Oxygen Demand (BOD) (5-day @ 20°C)	mg/L	10	15	20			TTC
	lbs/day[1]	709	1064	1418			
	% Removal	85	--	--	--	--	CFR
Total Suspended Solids	mg/L	10	15	20			TTC
	lbs/day[1]	709	1064	1418			
	% Removal	85	--	--	--	--	CFR
Ammonia (as N)	mg/L	1.3	--	4.3			NAWQC
	lbs/day	92.2	--	305			
Nitrate + Nitrite (as N)	mg/L	10					MCL
Total Coliform[2]	MPN/100 ml		2.2	23		240	Title 22
pH	Standard Units				6.5	8.5	BP
Methylmercury	grams	0.94[1,3,6]					TMDL
Electrical Conductivity	µmhos/cm	727[6]					
Diazinon and Chlorpyrifos	µg/L	[4]	--	[5]	--	--	BP

1. Based on an average dry weather flow permitted flow of 8.5 mgd. Mass limits effective immediately.
2. Effluent total coliform also shall not exceed i.) 2.2 MPN/100ml, as a 7-day median; and ii). 23 MPN/100ml, more than once in any 30-day period.
3. Total calendar annual load of methylmercury shall not exceed 0.94 grams.
4. $S_{AMEL} = \frac{C_{D-avg}}{0.079} + \frac{C_{C-avg}}{0.012} \leq 1.0$
   C_{D-avg} = average monthly diazinon effluent concentration in µg/L
   C_{C-avg} = average monthly chlorpyrifos effluent concentration in µg/L
5. $S_{MDEL} = \frac{C_{D-max}}{0.16} + \frac{C_{C-max}}{0.025} \leq 1.0$
   C_{D-max} = maximum daily diazinon effluent concentration in µg/L
   C_{C-max} = maximum daily chlorpyrifos effluent concentration in µg/L
6. Applied as an annual average

DC – Based on the design capacity of the Facility.
TTC – Based on tertiary treatment capability. These effluent limitations reflect the capability of a properly operated tertiary treatment plant.

CFR – Based on secondary treatment standards contained in 40 CFR Part 133.
BP – Based on water quality objectives contained in the Basin Plan.
CTR – Based on water quality criteria contained in the California Toxics Rule and applied as specified in the SIP.
NAWQC – Based on USEPA's National Ambient Water Quality Criteria for the protection of freshwater aquatic life.
SEC MCL – Based on the Secondary Maximum Contaminant Level.
TMDL – Based on the TMDL for methylmercury in the Delta.
MCL – Based on the Primary Maximum Contaminant Level.
Title 22 – Based on CA Department of Public Health Reclamation Criteria, CCR, Division 4, Chapter 3 (Title 22).

E. Interim Effluent Limitations

1. **Compliance Schedule for Methylmercury.** The permit limitations for methylmercury are more stringent than the limitations previously imposed. These new limitations are based on the Basin Plan's Delta Mercury Control Program that became effective on 20 October 2011**.** The Discharger has complied with the application requirements in paragraph 4 of the State Water Board's Compliance Schedule Policy, and the Discharger's application demonstrates the need for additional time to implement actions to comply with the new limitations, as described below. Therefore, a compliance schedule for compliance with the effluent limitations for methylmercury is established in this Order.

   A compliance schedule is necessary because the Discharger must implement actions, including a Phase 1 Methylmercury Control Study and possible facility upgrades to comply with the final effluent limitations.

   The Discharger has made diligent efforts to quantify pollutant levels in the discharge and the sources of the pollutant in the waste stream, and the results of those efforts. The Discharger is currently implementing a pollution prevention plan for mercury that was submitted to the Central Valley Water Board on 9 September 2010.

   The compliance schedule is as short as possible. The Central Valley Water Board will use the Phase 1 Control Studies' results and other information to consider amendments to the Delta Mercury Control Program during the Phase 1 Delta Mercury Control Program Review. Therefore, at this time it is uncertain what measures must be taken to consistently comply with the waste load allocation for methylmercury. The interim effluent limits and final compliance date may be modified at the completion of Phase 1.

   Interim performance-based limitations have been established in this Order in accordance with the Delta Mercury Control Program. The interim limitations were determined as described in section IV.E.2., below, and are in effect through until the final limitations take effect.

2. **Interim Limits for Total Mercury.** During Phase 1, the Delta Mercury Control Program requires POTWs to limit their discharges of inorganic (total) mercury to facility performance-based levels. The interim inorganic (total) mercury effluent mass limit is to be derived using current, representative data and shall not exceed the 99.9th percentile of 12-month running effluent inorganic (total) mercury loads

(lbs/year). At the end of Phase 1, the interim inorganic (total) mercury mass limit will be re-evaluated and modified as appropriate.

The interim limitations for total mercury in this Order are based on the current treatment plant performance. In developing the interim limitation, where there are 10 sampling data points or more, sampling and laboratory variability is accounted for by establishing interim limits that are based on normally distributed data where 99.9% of the data points will lie within 3.3 standard deviations of the mean (Basic Statistical Methods for Engineers and Scientists, Kennedy and Neville, Harper and Row). Therefore, the 99.9th percentile was determined using the mean plus 3.3 standard deviations of the available data.

Total mercury effluent data collected since the operation of tertiary filtration, from August 2008 through December 2011, was used in the determination of the performance-based interim effluent limits. 12-month running mercury loads were calculated, the average and standard deviation of the 12-month running mercury loads were determined, and used to calculate the 99.9th percentile.

The Central Valley Water Board finds that the Discharger can undertake source control and treatment plant measures to maintain compliance with the interim limitations included in this Order. Interim limitations are established when compliance with final effluent limitations cannot be achieved by the existing discharge. Discharge of constituents in concentrations in excess of the final effluent limitations, but in compliance with the interim effluent limitations, can significantly degrade water quality and adversely affect the beneficial uses of the receiving stream on a long-term basis. The interim limitations, however, establish an enforceable ceiling concentration until compliance with the effluent limitation can be achieved.

The following table summarizes the calculations of the interim effluent limitations for total mercury:

Table F-18. Interim Effluent Limitation Calculation Summary

Parameter	Units	Maximum Annual Effluent Loading	Mean	Standard Deviation	Number of Samples	Interim Limitation
Total Mercury	g/yr	21	18	1.4	26	23

F. Land Discharge Specifications – (Not Applicable)

G. Reclamation Specifications – (Not Applicable

V. RATIONALE FOR RECEIVING WATER LIMITATIONS

Basin Plan water quality objectives to protect the beneficial uses of surface water and groundwater include numeric objectives and narrative objectives, including objectives for chemical constituents, toxicity, and tastes and odors. The toxicity objective requires that

surface water and groundwater be maintained free of toxic substances in concentrations that produce detrimental physiological responses in humans, plants, animals, or aquatic life. The chemical constituent objective requires that surface water and groundwater shall not contain chemical constituents in concentrations that adversely affect any beneficial use or that exceed the maximum contaminant levels (MCLs) in Title 22, CCR. The tastes and odors objective states that surface water and groundwater shall not contain taste- or odor-producing substances in concentrations that cause nuisance or adversely affect beneficial uses. The Basin Plan requires the application of the most stringent objective necessary to ensure that surface water and groundwater do not contain chemical constituents, toxic substances, radionuclides, or taste and odor producing substances in concentrations that adversely affect domestic drinking water supply, agricultural supply, or any other beneficial use.

A. Surface Water

1. CWA section 303(a-c), requires states to adopt water quality standards, including criteria where they are necessary to protect beneficial uses. The Central Valley Water Board adopted water quality criteria as water quality objectives in the Basin Plan. The Basin Plan states that "[t]*he numerical and narrative water quality objectives define the least stringent standards that the Regional Water Board will apply to regional waters in order to protect the beneficial uses.*" The Basin Plan includes numeric and narrative water quality objectives for various beneficial uses and water bodies. This Order contains receiving surface water limitations based on the Basin Plan numerical and narrative water quality objectives for bacteria, biostimulatory substances, color, chemical constituents, dissolved oxygen, floating material, oil and grease, pH, pesticides, radioactivity, suspended sediment, settleable substances, suspended material, tastes and odors, temperature, toxicity, and turbidity.

a. Temperature. The Thermal Plan requires that a discharge shall not *i) exceed natural receiving water temperature by more than 20 °F; ii) create a zone, defined by water temperatures of more than 1 °F above natural receiving water temperature . . .; and iii) cause a surface temperature to rise greater than 4 °F above the natural temperature of the receiving waters at any time or place.* The Basin Plan also contains water quality objectives for temperature to protect the beneficial uses of the receiving water. Natural receiving water is defined as "*The temperature of the receiving water…unaffected by any elevated temperature waste discharge or irrigation return waters*", which typically is the upstream receiving water temperatures. The discharge is to a dead end slough with no upstream natural flows. Because of this, it is not possible to implement the Thermal Plan or Basin Plan objectives for temperature that addresses temperature changes based on the natural receiving water temperature. Thus, Order R5-2007-0113 required the Discharger to conduct a site-specific temperature study to determine the appropriate temperature controls to protect the beneficial uses of the receiving water.

Dredger Cut is within the designated critical habitat for 5 federally-listed

species including winter- and spring-run Chinook salmon, steelhead, delta smelt and green sturgeon. Additionally, wildlife species known to feed on Central Valley fishes include the listed California Least Tern and Giant Garter snake may be affected. The Discharger submitted a thermal study in June 2010, *Assessment of Water Temperatures and Characterization of Aquatic Biological Resources in Dredger Cut and Downstream Water Bodies to Determine Appropriate Temperature Controls for the White Slough Water Pollution Control Facility* (Thermal Study), prepared by Robertson-Bryan, Inc. The Thermal Study recommended the following receiving water limitations on an instantaneous basis:

- 86°F for the period May through October;
- 80°F for the month of April;
- 75°F for the months of March and November;
- 68°F for the period December through February

The US Fish and Wildlife Service (USFWS) submitted comments and recommendations on the Thermal Study. Delta smelt thermal tolerances range from 68°F to 77.7^{o}F for limited spawning and disorganized behavior that leads to loss of ability to escape predators. USFWS recognizes that water temperatures in the internal Delta can exceed thermal tolerances for delta smelt during May and June. Hydrologic alteration and climate extremes could result in spring temperatures above 68°F independent of the effluent temperature. The Thermal Study shows that temperatures in Dredger Cut and White Slough in June 2009 averaged above 68°F, with maximum temperatures exceeding 78.8^{o}F for all monitoring sites. USFWS requested an additional assessment to address Delta smelt. In response to USFWS comments, Robertson-Bryan submitted in August 2012, *Assessment of the Potential Effects of the Proposed Temperature Limits for the White Slough Water Pollution Control Facility Discharge on Delta Smelt*. USFWS determined that since the discharge is at the terminal end of Dredger Cut that prevents the assessment of temperature background conditions, the monitoring locations and quantity and timing of the data hinder USFWS's ability to make recommendations on numeric limits. Thus, USFWS recommended the Discharger conduct an additional thermal study during the tenure of the 2013 NPDES permit with USFWS assistance.

This Order requires the Discharger conduct a study to gather additional data to meet three objectives. The first objective is to better characterize the background temperature regime of White Slough and Bishop Cut (Fourteen Slough) throughout a range of water years and spring climate conditions. The second objective is to characterize the effect of the Facility's existing thermal discharge on White Slough and Bishop Cut with emphasis on the January to June period, when delta smelt are most likely to be present, throughout a range of water years and spring climate conditions. And thirdly, predict the effect of any proposed thermal

discharge conditions less restrictive than the State Thermal Plan would have on White Slough and Bishop Cut. In the interim, the proposed receiving water temperature limits have been established as receiving water limits in this Order.

B. Groundwater (Not Applicable)

VI. RATIONALE FOR MONITORING AND REPORTING REQUIREMENTS

40 CFR 122.48 requires that all NPDES permits specify requirements for recording and reporting monitoring results. Water Code sections 13267 and 13383 authorize the Central Valley Water Boards to require technical and monitoring reports. The Monitoring and Reporting Program (Attachment E) of this Order, establishes monitoring and reporting requirements to implement federal and state requirements. The following provides the rationale for the monitoring and reporting requirements contained in the Monitoring and Reporting Program for the Facility.

A. Influent Monitoring

1. Influent monitoring is required to collect data on the characteristics of the wastewater and to assess compliance with effluent limitations (e.g., BOD_5 and TSS reduction requirements). The monitoring frequencies for flow (continuous), pH (continuous), BOD_5 (weekly), TSS (weekly), TDS (weekly), and EC (weekly) have been retained from Order No. R5-2007-0133.

B. Effluent Monitoring

1. Pursuant to the requirements of 40 CFR 122.44(i)(2) effluent monitoring is required for all constituents with effluent limitations. Effluent monitoring is necessary to assess compliance with effluent limitations, assess the effectiveness of the treatment process, and to assess the impacts of the discharge on the receiving stream and groundwater.

2. Effluent monitoring frequencies and sample types for flow (continuous), temperature (continuous), total residual chlorine (grab), pH (weekly) , BOD (daily), TSS (daily), total coliform organisms (daily), turbidity (continuous), dissolved oxygen (daily), ammonia (weekly), nitrate+nitrite (weekly), total Kjeldahl nitrogen (monthly), total organic carbon (monthly), total dissolved solids (monthly), mercury (monthly), methylmercury (monthly), acute toxicity (monthly) and chronic toxicity (quarterly) have been retained from Order No. R5-2007-0113 to determine compliance with effluent limitations or impacts to the receiving water for these parameters.

3. Effluent monitoring for nitrite and electrical conductivity have been reduced from weekly to monthly from Order No. R5-2007-0113. Nitrite is no longer a separate limit however; monitoring is retained to determine future reasonable potential analysis. Electrical conductivity limitation has been changed from a monthly limit to an annual average limit based on the secondary MCL WQO timeframes.

4. Monthly effluent monitoring for hardness (as $CaCO_3$) has been included in this Order to evaluate reasonable potential with CTR hardness dependent metals.

5. Monitoring data collected over the existing permit term for aluminum, manganese, dichlorobromomethane, chlorodibromomethane, molybdenum did not demonstrate reasonable potential to exceed water quality objectives/criteria. Thus, specific

monitoring requirements for these parameters have not been retained from Order No. R5-2007-0113.

6. **Chlorpyrifos and Diazinon.** This Order requires that pollutants be analyzed using the analytical methods described in 40 CFR Part 136 or an EPA approved Alternate Testing Procedure. However, where no methods are specified for a given pollutant that meets a specific reporting limit or method performance standard, an alternate method can be approved by the Central Valley Water Board. This Order requires either EPA 8141A or EPA 625M for chlorpyrifos and diazinon, or other methods approved under 40 CFR 136 that have RLs below the chlorpyrifos and diazinon water quality objectives. These alternate analytical methods are necessary to determine compliance with the effluent limits for these constituents. Basin Plan water quality objectives for chlorpyrifos and diazinon are 0.015 µg/L and 0.1 µg/L, respectively (as a 4-day average. See Attachment F, Section IV.C.3.c.ii.(a) for more information). Therefore, chlorpyrifos and diazinon must be analyzed using analytical methods that have a lower MDL than the Basin Plan water quality objectives.

7. California Water Code section 13176, subdivision (a), states: "The analysis of any material required by [Water Code sections 13000-16104] shall be performed by a laboratory that has accreditation or certification pursuant to Article 3 (commencing with Section 100825) of Chapter 4 of Part 1 of Division 101 of the Health and Safety Code." The Department of Public Health certifies laboratories through its Environmental Laboratory Accreditation Program (ELAP).

   Section 13176 cannot be interpreted in a manner that would violate federal holding time requirements that apply to NPDES permits pursuant to the Clean Water Act. (Wat. Code §§ 13370, subd. (c), 13372, 13377.) Section 13176 is inapplicable to NPDES permits to the extent it is inconsistent with Clean Water Act requirements. (Wat. Code § 13372, subd. (a).) The holding time requirements are 15 minutes for chlorine residual, dissolved oxygen, and pH, and immediate analysis is required for temperature. (40 C.F.R. § 136.3(e), Table II)

C. Whole Effluent Toxicity Testing Requirements

1. **Acute Toxicity.** Weekly 96-hour bioassay testing is required to demonstrate compliance with the effluent limitation for acute toxicity. Previous Order R5-2007-0113 required weekly 96-hour acute bioassays. Since upgrading to tertiary treatment, the Discharger has demonstrated consistent compliance with the acute toxicity effluent limits. Therefore, the monitoring frequency for the 96-hour acute bioassays has been reduced to monthly in this Order.

   Acute toxicity testing shall be conducted in accordance with USEPA's Methods for Measuring the Acute Toxicity of Effluents and Receiving Waters to Freshwater and Marine Organisms, October 2002 (EPA-821-R-02-012, Fifth Edition). EPA's acute toxicity testing method allows the use of either the test species *Pimephales promelas* (fathead minnow) or *Oncorhynchus my*kiss (rainbow trout). Due to the

presence of salmon and steelhead in Dredger Cut, this Order requires the use of *Oncorhynchus my*kiss (rainbow trout) as the test species.

2. **Chronic Toxicity.** Quarterly chronic whole effluent toxicity testing is required in order to demonstrate compliance with the Basin Plan's narrative toxicity objective. This is consistent with previous Order R5-2007-0113.

D. Receiving Water Monitoring

1. Surface Water

a. Receiving water monitoring is necessary to assess compliance with receiving water limitations and to assess the impacts of the discharge on the receiving stream.

2. Groundwater

Not Applicable.

E. Other Monitoring Requirements

1. Water Supply Monitoring

Water supply monitoring is required to evaluate the source of constituents in the wastewater.

2. UV Disinfection System Monitoring

UV system specifications and monitoring and reporting is required when the UV system becomes operational to ensure that adequate UV dosage is applied to the wastewater to inactivate pathogens in the wastewater. UV Disinfection system monitoring is imposed pursuant to requirements established by the California Department of Public Health (DPH), and the National Water Research Institute (NWRI), and American Water Works Association Research Foundation NWRI/AWWARF's *"Ultraviolet Disinfection Guidelines for Drinking Water and Water Reuse."*

3. Effluent and Receiving Water Characterization.

An effluent and receiving water monitoring study is required to ensure adequate information is available for the next permit renewal. During the third or fourth year of this permit term, during periods of surface water discharge the Discharger is required to conduct monthly monitoring of the effluent at EFF-001 and of the receiving water at RSW-005 for all priority pollutants and other constituents of concern as described in Attachment I. Dioxin and furan sampling shall be performed once a permit term, as described in Attachment I.

VII. RATIONALE FOR PROVISIONS

A. Standard Provisions

Standard Provisions, which apply to all NPDES permits in accordance with 40 CFR 122.41, and additional conditions applicable to specified categories of permits in accordance with 40 CFR 122.42, are provided in Attachment D. The discharger must comply with all standard provisions and with those additional conditions that are applicable under 40 CFR 122.42.

40 CFR 122.41(a)(1) and (b) through (n) establish conditions that apply to all State-issued NPDES permits. These conditions must be incorporated into the permits either expressly or by reference. If incorporated by reference, a specific citation to the regulations must be included in the Order. 40 CFR 123.25(a)(12) allows the state to omit or modify conditions to impose more stringent requirements. In accordance with 40 CFR 123.25, this Order omits federal conditions that address enforcement authority specified in 40 CFR 122.41(j)(5) and (k)(2) because the enforcement authority under the Water Code is more stringent. In lieu of these conditions, this Order incorporates by reference Water Code section 13387(e).

B. Special Provisions

1. Reopener Provisions

a. Mercury. The Delta Mercury Control Program was designed to proceed in two phases. Phase 1 spans a period of approximately nine years and emphasizes studies and pilot projects to develop and evaluate management practices to control methylmercury. At the end of Phase 1, the Central Valley Water Boards will conduct a Phase 1 Delta Mercury Control Program Review that considers: modification of methylmercury goals, objectives, allocations and/or the Final Compliance Date, implementation of management practices and schedules for methylmercury controls, and adoption of a mercury offset program for discharges who cannot meet their load and waste load allocations after implementing all reasonable load reduction strategies. The fish tissue objectives, the linage analysis between objectives and source, and the attainability of the allocations will be re-evaluated based on the findings of Phase 1 control studies and other information. The linkage analysis, fish tissue objectives, allocations, and time schedules may be adjusted at the end of Phase1, or subsequent program reviews, as appropriate. There, this Order may be reopened to address changes to the Delta Mercury Control Program.

b. Pollution Prevention. This Order requires the Discharger prepare pollution prevention plans following Water Code section 13263.3(d)(3) for mercury. This reopener provision allows the Central Valley Water Board to reopen this Order for addition and/or modification of effluent limitations and requirements for these constituents based on a review of the pollution prevention plans.

c. **Whole Effluent Toxicity.** This Order requires the Discharger to investigate the causes of, and identify corrective actions to reduce or eliminate effluent toxicity through a Toxicity Reduction Evaluation (TRE). This Order may be reopened to include a numeric chronic toxicity limitation, a new acute toxicity limitation, and/or a limitation for a specific toxicant identified in the TRE. Additionally, if a numeric chronic toxicity water quality objective is adopted by the State Water Board, this Order may be reopened to include a numeric chronic toxicity limitation based on that objective.

d. **Water Effects Ratio (WER) and Metal Translators.** A default WER of 1.0 has been used in this Order for calculating CTR criteria for applicable priority pollutant inorganic constituents. In addition, default dissolved-to-total metal translators have been used to convert water quality objectives from dissolved to total recoverable when developing effluent limitations for non-priority pollutant metals. If the Discharger performs studies to determine site-specific WERs and/or site-specific dissolved-to-total metal translators, this Order may be reopened to modify the effluent limitations for the applicable inorganic constituents.

2. Special Studies and Additional Monitoring Requirements

a. **Chronic Whole Effluent Toxicity Requirements.** The Basin Plan contains a narrative toxicity objective that states, “All waters shall be maintained free of toxic substances in concentrations that produce detrimental physiological responses in human, plant, animal, or aquatic life.” (Basin Plan at page <III-8.00. Based on whole effluent chronic toxicity testing performed by the Discharger from November 2007 through November 2011, the discharge has reasonable potential to cause or contribute to an in-stream excursion above of the Basin Plan’s narrative toxicity objective.

This provision requires the Discharger to develop a TRE Workplan in accordance with USEPA guidance. In addition, the provision provides a numeric toxicity monitoring trigger and requirements for accelerated monitoring, as well as, requirements for TRE initiation if toxicity has been demonstrated.

Monitoring Trigger. A numeric toxicity monitoring trigger of **> 1** TUc (where TUc = 100/NOEC) is applied in the provision, because this Order does not allow any dilution for the chronic condition. Therefore, a TRE is triggered when the effluent exhibits toxicity at 100% effluent.

Accelerated Monitoring. The provision requires accelerated WET testing when a regular WET test result exceeds the monitoring trigger. The purpose of accelerated monitoring is to determine, in an expedient manner, whether there is toxicity before requiring the implementation of a TRE. Due to possible seasonality of the toxicity, the accelerated monitoring should be performed in a timely manner, preferably taking no more than 2 to 3 months to complete.

The provision requires accelerated monitoring consisting of four chronic toxicity tests in a six-week period (i.e., one test every two weeks) using the species that exhibited toxicity. Guidance regarding accelerated monitoring and TRE initiation is provided in the *Technical Support Document for Water Quality-based Toxics Control,* EPA/505/2-90-001, March 1991 (TSD). The TSD at page 118 states, "*EPA recommends if toxicity is repeatedly or periodically present at levels above effluent limits more than 20 percent of the time, a TRE should be required.*" Therefore, four accelerated monitoring tests are required in this provision. If no toxicity is demonstrated in the four accelerated tests, then it demonstrates that toxicity is not present at levels above the monitoring trigger more than 20 percent of the time (only 1 of 5 tests are toxic, including the initial test). However, notwithstanding the accelerated monitoring results, if there is adequate evidence of effluent toxicity (i.e. toxicity present exceeding the monitoring trigger more than 20 percent of the time), the Executive Officer may require that the Discharger initiate a TRE.

See the WET Accelerated Monitoring Flow Chart (Figure F-1), below, for further clarification of the accelerated monitoring requirements and for the decision points for determining the need for TRE initiation.

TRE Guidance. The Discharger is required to prepare a TRE Workplan in accordance with USEPA guidance. Numerous guidance documents are available, as identified below:

- Toxicity Reduction Evaluation Guidance for Municipal Wastewater Treatment Plants, EPA/833-B-99/002, August 1999.
- Generalized Methodology for Conducting Industrial Toxicity Reduction Evaluations (TREs), EPA/600/2-88/070, April 1989.
- Methods for Aquatic Toxicity Identification Evaluations: Phase I Toxicity Characterization Procedures, Second Edition, EPA 600/6-91/003, February 1991.
- Toxicity Identification Evaluation: Characterization of Chronically Toxic Effluents, Phase I, EPA/600/6-91/005F, May 1992.
- Methods for Aquatic Toxicity Identification Evaluations: Phase II Toxicity Identification Procedures for Samples Exhibiting Acute and Chronic Toxicity, Second Edition, EPA/600/R-92/080, September 1993.
- Methods for Aquatic Toxicity Identification Evaluations: Phase III Toxicity Confirmation Procedures for Samples Exhibiting Acute and Chronic Toxicity, Second Edition, EPA 600/R-92/081, September 1993.
- Methods for Measuring the Acute Toxicity of Effluents and Receiving Waters to Freshwater and Marine Organisms, Fifth Edition, EPA-821-R-02-012, October 2002.

- Short-term Methods for Estimating the Chronic Toxicity of Effluents and Receiving Waters to Freshwater Organisms, Fourth Edition, EPA-821-R-02-013, October 2002.

- Technical Support Document for Water Quality-based Toxics Control, EPA/505/2-90-001, March 1991.

Figure F-1
WET Accelerated Monitoring Flow Chart

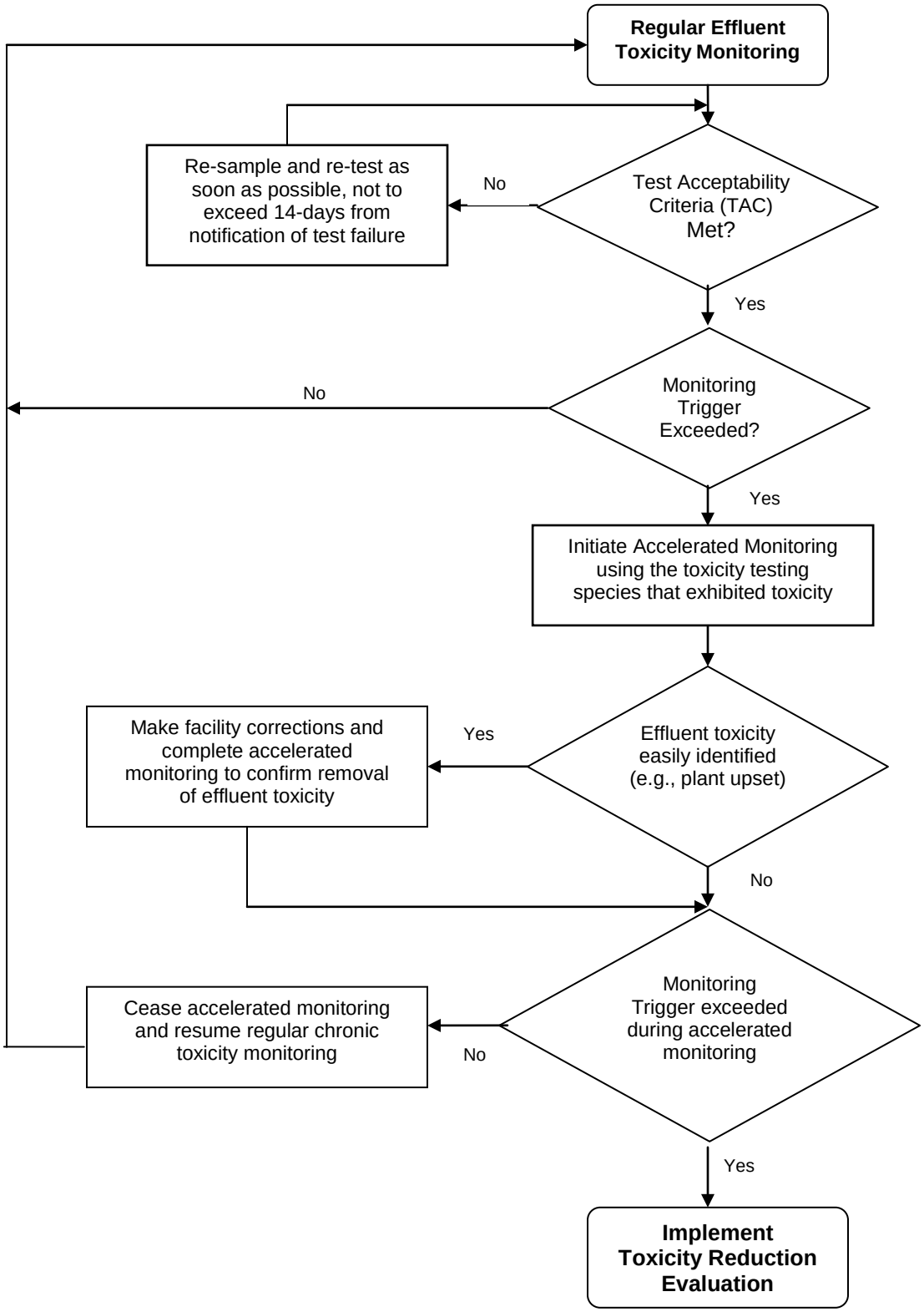

3. Best Management Practices and Pollution Prevention

a. Pollution Prevention Plan for Mercury. The Basin Plan's Delta Mercury Control Plan requires NPDES permitted facilities to submit and implement pollutant minimization programs for mercury. The Discharger submitted a pollution prevention plan for mercury dated January 2011. The Discharger shall update and implement a pollution prevention plan for mercury in accordance with Water Code section 13263.3(d)(3), per the compliance schedule in this Order for methylmercury (Section VI.C.7.a). The minimum requirements for the pollution prevention plan are outlined in the Fact Sheet (Attachment F section VII.B.3.c). Progress reports shall be submitted annually in accordance with the Monitoring and Reporting Program *(Attachment E section X.D.1.).* The progress reports shall discuss the effectiveness of the PPP in the reduction of mercury in the discharge, include a summary of mercury and methylmercury monitoring results, and discuss updates to the PPP. If the existing PPP submitted by the Discharger in April 2012is adequate, a new PPP is not necessary. A letter indicating the existing is PPP is adequate is only necessary.

b. Mercury Exposure Reduction Program. The Basin Plan's Delta Mercury Control Program requires dischargers to participate in a mercury Exposure Reduction Program. The Exposure Reduction Program is needed to address public health impacts of mercury in Delta fish, including activities that reduce actual and potential exposure of and mitigate health impacts to those people and communities most likely to be affected by mercury in Delta caught fish, such as subsistence fishers and their families.

The Exposure Reduction Program must include elements directed toward:

- Developing and implementing community-driven activities to reduce mercury exposure;
- Raising awareness of fish contamination issues among people and communities most likely affected by mercury in Delta-caught fish such as subsistence fishers and their families;
- Integrating community-based organizations that serve Delta fish consumers, Delta fish consumers, tribes, and public health agencies in the design and implementation of an exposure reduction program;
- Identifying resources, as needed, for community-based organizations and tribes to participate in the Program;
- Utilizing and expanding upon existing programs and materials or activities in place to reduce mercury, and as needed, create new materials or activities; and

- Developing measures for program effectiveness.

This Order requires the Discharger participate in a mercury Exposure Reduction Program in accordance with the Delta Mercury Control Program. The Discharger, either individually or collectively with other Delta dischargers, shall submit an exposure reduction work plan for Executive Officer approval by **20 October 2013**. The objective of the Exposure Reduction Program is to reduce mercury exposure of Delta fish consumers most likely affected by mercury. The work plan shall address the Exposure Reduction Program objective, elements, and the Discharger's coordination with other stakeholders. The Discharger shall integrate or, at minimum, provide good-faith opportunities for integration of community-based organizations, tribes, and consumers of Delta fish into planning, decision making, and implementation of exposure reduction activities. **The Discharger shall implement the work plan within six months of Executive Officer Approval of the work plan.**

c. Water Code Section 13263.3(d)(3) Pollution Prevention Plans. A pollution prevention plan for mercury is required in this Order per Water Code section 13263.3(d)(1)(C). The pollution prevention plans required in section VI.C.7.a and b. of this Order, shall, at a minimum, meet the requirements outlined in Water Code section 13263.3(d)(3). The minimum requirements for the pollution prevention plans include the following:

i. An estimate of all of the sources of a pollutant contributing, or potentially contributing, to the loadings of a pollutant in the treatment plant influent.

ii. An analysis of the methods that could be used to prevent the discharge of the pollutants into the Facility, including application of local limits to industrial or commercial dischargers regarding pollution prevention techniques, public education and outreach, or other innovative and alternative approaches to reduce discharges of the pollutant to the Facility. The analysis also shall identify sources, or potential sources, not within the ability or authority of the Discharger to control, such as pollutants in the potable water supply, airborne pollutants, pharmaceuticals, or pesticides, and estimate the magnitude of those sources, to the extent feasible.

iii. An estimate of load reductions that may be attained through the methods identified in subparagraph ii.

iv. A plan for monitoring the results of the pollution prevention program.

v. A description of the tasks, cost, and time required to investigate and implement various elements in the pollution prevention plan.

vi. A statement of the Discharger's pollution prevention goals and strategies, including priorities for short-term and long-term action, and a description of the Discharger's intended pollution prevention activities for the immediate future.

vii. A description of the Discharger's existing pollution prevention programs.

viii. An analysis, to the extent feasible, of any adverse environmental impacts, including cross-media impacts or substitute chemicals that may result from the implementation of the pollution prevention program.

ix. An analysis, to the extent feasible, of the costs and benefits that may be incurred to implement the pollution prevention program.

d. Salinity Evaluation and Minimization Plan. An Evaluation and Minimization Plan for salinity is required in this Order to ensure adequate measures are developed and implemented by the Discharger to reduce the discharge of salinity to Dredger Cut. If the existing Salinity Evaluation and Minimization Plan submitted by the Discharger on 31 October 2008is adequate, a new Plan is not necessary. A letter indicating the existing is Plan is adequate is only necessary.

4. Construction, Operation, and Maintenance Specifications

a. Turbidity Operational Requirements. Turbidity specifications have been included in this Order as a second indicator of the effectiveness of the treatment process and to assure compliance with the required level of treatment. Failure of the filtration system such that virus removal is impaired would normally result in increased particles in the effluent, which result in higher effluent turbidity. Turbidity has a major advantage for monitoring filter performance, allowing immediate detection of filter failure and rapid corrective action. These operational turbidity specifications are necessary to assess compliance with the DPH recommended Title 22 disinfection criteria, or equivalent.

b. Ultraviolet (UV) Disinfection System Operating Specifications. UV specifications have been included in the Order to assure compliance with the required level of treatment. Failure of the disinfection system would result in total coliform organisms' concentration greater than DPH recommended Title 22 disinfection criteria, or equivalent. The Discharger submitted the December 2010 "Lodi White Slough WPCF UV Commissioning Tests Summary Report" by Carollo Engineers for review by the California Department of Public Health (CDPH). CDPH reviewed the report and required specific operational parameters that are included in the Construction, Operation, and Maintenance Specifications, Section VI.C.4.

5. Special Provisions for Municipal Facilities (POTWs Only)

a. Pretreatment Requirements.

i. The federal CWA section 307(b), and federal regulations, 40 CFR Part 403, require publicly owned treatment works to develop an acceptable industrial pretreatment program. A pretreatment program is required to prevent the introduction of pollutants, which will interfere with treatment plant operations or sludge disposal, and prevent pass through of pollutants that exceed water quality objectives, standards or permit limitations. Pretreatment requirements are imposed pursuant to 40 CFR Part 403.

ii. The Discharger shall implement and enforce its approved pretreatment program and is an enforceable condition of this Order. If the Discharger fails to perform the pretreatment functions, the Central Valley Water Board, the State Water Board or USEPA may take enforcement actions against the Discharger as authorized by the CWA.

b. The State Water Board issued General Waste Discharge Requirements for Sanitary Sewer Systems, Water Quality Order No. 2006-0003-DWQ (General Order) on 2 May 2006. The General Order requires public agencies that own or operate sanitary sewer systems with greater than one mile of pipes or sewer lines to enroll for coverage under the General Order. The General Order requires agencies to develop sanitary sewer management plans (SSMPs) and report all sanitary sewer overflows (SSOs), among other requirements and prohibitions.

Furthermore, the General Order contains requirements for operation and maintenance of collection systems and for reporting and mitigating sanitary sewer overflows. Inasmuch that the Discharger's collection system is part of the system that is subject to this Order, certain standard provisions are applicable as specified in Provisions, section VI.C.5. For instance, the 24-hour reporting requirements in this Order are not included in the General Order. The Discharger must comply with this Order and separately with the requirements of the General Order, which are not incorporated herein by reference. The Discharger and public agencies that are discharging wastewater into the facility were required to obtain enrollment for regulation under the General Order by 1 December 2006.

6. Other Special Provisions

a. Ownership Change. To maintain the accountability of the operation of the Facility, the Discharger is required to notify the succeeding owner or operator of the existence of this Order by letter if, and when, there is any change in control or ownership of land or waste discharge facilities presently owned or controlled by the Discharger.

7. Compliance Schedules

a. Compliance Schedule for Methylmercury. The State Water Board adopted the Policy for Compliance Schedules in National Pollutant Discharge

Elimination System Permits (Resolution 2008 0025), which is the governing Policy for compliance schedules in NPDES permits. A Discharger who seeks a compliance schedule must demonstrate additional time is necessary to implement actions to comply with a more stringent permit limitation. The Discharger must provide the following documentation as part of the application requirements:

i. Diligent efforts have been made to quantify pollutant levels in the discharge and the sources of the pollutant in the waste stream, and the results of those efforts;

ii. Source control efforts are currently underway or completed, including compliance with any pollution prevention programs that have established;

iii. A proposed schedule for additional source control measures or waste treatment;

iv. Data demonstrating current treatment facility performance to compare against existing permit effluent limits, as necessary to determine which is the more stringent interim, permit effluent limit to apply if a schedule of compliance is granted;

v. The highest discharge quality that can reasonably be achieved until final compliance is attained;

vi. The proposed compliance schedule is as short as possible, given the type of facilities being constructed or programs being implemented, and industry experience with the time typically required to construct similar facilities or implement similar programs; and

vii. Additional information and analyses to be determined by the Central Valley Water Board on a case-by-case basis.

Based on information submitted with the Report of Waste Discharge, self-monitoring reports, pollution prevention plans, and other miscellaneous submittals, it has been demonstrated to the satisfaction of the Central Valley Water Board that the Discharger needs time to implement actions to comply with the new effluent limitations for methylmercury

The Delta Mercury Control Program is composed of two phases. Phase 1 spans from 20 October 2011 through the Phase I Delta Mercury Control Program Review, expected to conclude by October 2020. Phase 1 emphasizes studies and pilot projects to develop and evaluate management practices to control methylmercury. Phase 1 includes provisions for: implementing pollution minimization programs and interim mass limits for inorganic (total) mercury point sources in the Delta and Yolo Bypass; controlling sediment-bound mercury in the Delta and Yolo Bypass that

may become methylated in agricultural lands, wetland, and open-water habitats; and reducing total mercury loading to San Francisco Bay, as required by the Water Quality Control Plan for the San Francisco Bay Basin.

At the end of Phase 1, the Central Valley Water Board will conduct a Phase 1 Delta Mercury Control Program Review that considers: modification of methylmercury goals, objectives, allocations and/or the Final Compliance Date; implementation of management practices and schedules for methylmercury controls; and adoption of a mercury offset program for dischargers who cannot meet their load and waste load allocations after implementing all reasonable load reduction strategies. The review also will consider other potential public and environmental benefits and negative impacts (e.g., habitat restoration, flood protection, water supply, fish consumption) of attaining the allocations. The fish tissue objectives, the linkage analysis between objectives and sources, and the attainability of the allocations will be re-evaluated based on the findings of Phase 1 control studies and other information. The linkage analysis, fish tissue objectives, allocations, and time schedules shall be adjusted at the end of Phase 1, or subsequent program reviews, if appropriate.

Phase 2 begins after the Phase 1 Delta Mercury Control Program Review or by 20 October 22, whichever occurs first, and ends in 2030. During Phase 2, dischargers shall implement methylmercury control programs and continue inorganic (total) mercury reduction programs. Compliance monitoring and implementation of upstream control programs also shall occur in Phase 2.

The Compliance Schedule Policy requires that compliance schedules are as short as possible and may not exceed 10 years, except when *"…a permit limitation that implements or is consistent with the waste load allocations specified in a TMDL that is established through a Basin Plan amendment, provided that the TMDL implementation plan contains a compliance schedule or implementation schedule.*" As discussed above, the Basin Plan's Delta Mercury Control Program includes compliance schedule provisions and allows compliance with the waste load allocations for methylmercury by 2030. Until the Phase 1 Control Studies are complete and the Central Valley Water Board conducts the Phase 1 Delta Mercury Control Program Review, it is not possible to determine the compliance date for the Discharger that is as soon as possible. Therefore, this Order establishes a compliance schedule for the new, final, WQBELs for methylmercury with full compliance required by **31 December 2030**, which is consistent with the Final Compliance Date of the TMDL. At completion of the Phase 1 Delta Mercury Control Program Review, the final compliance date for this compliance schedule will be re-evaluated to ensure compliance is require as soon as possible.

VIII. PUBLIC PARTICIPATION

The Central Valley Water Board is considering the issuance of WDRs that will serve as an NPDES permit for the Facility. As a step in the WDR adoption process, the Central Valley

Water Board staff has developed tentative WDRs. The Central Valley Water Board encourages public participation in the WDR adoption process.

A. Notification of Interested Parties

The Central Valley Water Board has notified the Discharger and interested agencies and persons of its intent to prescribe waste discharge requirements for the discharge and has provided them with an opportunity to submit their written comments and recommendations. Notification was provided through the following **[Describe Notification Process (e.g., newspaper name and date)]**

B. Written Comments

The staff determinations are tentative. Interested persons are invited to submit written comments concerning these tentative WDRs. Comments must be submitted either in person or by mail to the Executive Office at the Central Valley Water Board at the address above on the cover page of this Order.

To be fully responded to by staff and considered by the Central Valley Water Board, written comments must be received at the Central Valley Water Board offices by 5:00 p.m. on **19 August 2013.**

C. Public Hearing

The Central Valley Water Board will hold a public hearing on the tentative WDRs during its regular Board meeting on the following date and time and at the following location:

Date:	**3,4 October 2013**
Time:	8:30 a.m.
Location:	Regional Water Quality Control Board, Central Valley Region 11020 Sun Center Dr., Suite #200 Rancho Cordova, CA 95670

Interested persons are invited to attend. At the public hearing, the Central Valley Water Board will hear testimony, if any, pertinent to the discharge, WDRs, and permit. Oral testimony will be heard; however, for accuracy of the record, important testimony should be in writing.

Please be aware that dates and venues may change. Our Web address is www.waterboards.ca.gov/centralvalley where you can access the current agenda for changes in dates and locations.

D. Waste Discharge Requirements Petitions

Any aggrieved person may petition the State Water Board to review the decision of the Central Valley Water Board regarding the final WDRs. The petition must be received by the State Water Board within 30 days of the Central Valley Water Board's action, and must be submitted to the following address:

State Water Resources Control Board
Office of Chief Counsel
P.O. Box 100, 1001 I Street
Sacramento, CA 95812-0100

E. Information and Copying

The Report of Waste Discharge, related documents, tentative effluent limitations and special provisions, comments received, and other information are on file and may be inspected at the address above at any time between 8:30 a.m. and 4:45 p.m., Monday through Friday. Copying of documents may be arranged through the Central Valley Water Board by calling (916) 464-3291.

F. Register of Interested Persons

Any person interested in being placed on the mailing list for information regarding the WDRs and NPDES permit should contact the Central Valley Water Board, reference this Facility, and provide a name, address, and phone number.

G. Additional Information

Requests for additional information or questions regarding this order should be directed to Kathleen Cole Harder at (916) 464-4778.

ATTACHMENT G – SUMMARY OF REASONABLE POTENTIAL ANALYSIS FOR CONSTITUENTS OF CONCERN [1]

Constituent	Units	MEC	B	C	CMC	CCC	Water & Org	Org. Only	Basin Plan	MCL	Reasonable Potential
Aluminum	mg/L	47	218	200	750	750	N/A	N/A	N/A	200	No
Ammonia (as N)	mg/L	7	1	1.3	1.3	N/A	N/A	N/A	N/A	N/A	Yes
Chlorodibromomethane	µg/L	<0.08	<0.08	0.41	N/A	N/A	0.41	34	N/A	80	No
Chlorpyrifos[1]	µg/L	<.007	<0.007	0.1	0.02	0.014	N/A	N/A	0.1	N/A	No
Copper (total recoverable)[2]	µg/L	6.5	1.9	10.3	15.6	10.3	1300	N/A	10	1000	No
Diazinon[1]	µg/L	<.005	<0.005	0.015	0.08	0.05	N/A	N/A	0.015	N/A	No
Dichlorobromomethane	µg/L	<0.1	<0.1	0.56	N/A	N/A	0.56	46	N/A	80	No
Endrin	µg/L	0.012	<0.003	Non-detect	N/A	N/A	N/A	N/A	Non-detect	N/A	No[4]
Iron (total recoverable)	µg/L	140	428	300	N/A	1000	N/A	N/A	300	300	No
Lead (total recoverable)[2]	µg/L	0.3	0.2	3.3	85	3.32	N/A	N/A	N/A	15	No
Manganese	µg/L	29	40.6	50	N/A	N/A	N/A	100	50	50	No
Mercury (total recoverable)	ng/L	0.006	0.003	2	N/A	N/A	N/A	N/A	N/A	2	No
Methylmercury[1]	ng/L	0.04	0.09						0.94[3]		Yes
Nitrate + Nitrite (as N)	mg/L	11	1.2	10	N/A	N/A	N/A	N/A	N/A	10	Yes

General Note: All inorganic concentrations are given as a total recoverable.
MEC = Maximum Effluent Concentration
B = Maximum Receiving Water Concentration or lowest detection level, if non-detect
C = Criterion used for Reasonable Potential Analysis
CMC = Criterion Maximum Concentration (CTR or NTR)
CCC = Criterion Continuous Concentration (CTR or NTR)
Water & Org = Human Health Criterion for Consumption of Water & Organisms (CTR or NTR)
Org. Only = Human Health Criterion for Consumption of Organisms Only (CTR or NTR)
Basin Plan = Numeric Site-specific Basin Plan Water Quality Objective
MCL = Drinking Water Standards Maximum Contaminant Level
NA = Not Available
ND = Non-detect

Footnotes:
(1) TMDL requires a limit for Chlorpyrifos & Diazinon & methylmercury.
(2) Effluent in total recoverable, receiving water in dissolved.
(3) The total calendar annual load of methylmercury shall not exceed 0.94 grams.
(4) MEC for endrin is not representative of the effluent quality

ATTACHMENT H – CALCULATION OF WQBELS

Parameter	Units	Most Stringent Criteria			Dilution Factors			HH Calculations			Aquatic Life Calculations									Final Effluent Limitations	
		HH	CMC	CCC	HH	CMC	CCC	ECA_{HH} = $AMEL_{HH}$	AMEL/MDEL $Multiplier_{HH}$	$MDEL_{HH}$	ECA $Multiplier_{acute}$	LTA_{acute}	ECA $Multiplier_{chronic}$	$LTA_{chronic}$	Lowest LTA	AMEL $Multiplier_{95}$	$AMEL_{AL}$	MDEL $Multiplier_{99}$	$MDEL_{AL}$	Lowest AMEL	Lowest MDEL
Ammonia Nitrogen, Total (as N)	mg/L	--	4.28	1.19	--	--	--	--	--	--	0.09	0.4	0.36	0.43	0.4	3.26	1.3	10.57	4.28	1.3	4.28
Nitrate + Nitrite, (as N)	mg/L	10						10	1.47	14.7										10	14.7

[1] USEPA Ambient Water Quality Criteria.

ATTACHMENT I – EFFLUENT AND RECEIVING WATER CHARACTERIZATION

I. Background. Sections 2.4.1 through 2.4.4 of the SIP provide minimum standards for analyses and reporting. (Copies of the SIP may be obtained from the State Water Resources Control Board, or downloaded from http://www.waterboards.ca.gov/iswp/index.html). To implement the SIP, effluent and receiving water data are needed for all priority pollutants. Effluent and receiving water pH and hardness are required to evaluate the toxicity of certain priority pollutants (such as heavy metals) where the toxicity of the constituents varies with pH and/or hardness. Section 3 of the SIP prescribes mandatory monitoring of dioxin congeners. In addition to specific requirements of the SIP, the Central Valley Water Board is requiring the following monitoring:

A. Drinking water constituents. Constituents for which drinking water Maximum Contaminant Levels (MCLs) have been prescribed in the California Code of Regulation are included in the *Water Quality Control Plan, Fourth Edition, for the Sacramento and San Joaquin River Basins* (Basin Plan). The Basin Plan defines virtually all surface waters within the Central Valley Region as having existing or potential beneficial uses for municipal and domestic supply. The Basin Plan further requires that, at a minimum, water designated for use as domestic or municipal supply shall not contain concentrations of chemical constituents in excess of the MCLs contained in the California Code of Regulations.

B. Effluent and receiving water temperature. This is both a concern for application of certain temperature-sensitive constituents, such as fluoride, and for compliance with the Basin Plan's thermal discharge requirements.

C. Effluent and receiving water hardness and pH. These are necessary because several of the CTR constituents are hardness and pH dependent.

II. Monitoring Requirements.

A. **Monthly Monitoring.** During the 3rd or 4th year of the permit term, samples shall be collected from the effluent and upstream receiving water (EFF-001 and RSW-005, respectively) and analyzed for the constituents listed in Table I-1. Sampling shall be conducted monthly during periods of surface water discharge for 1 year (typically from September through April). Samples that are non-detect after the first two sampling events do not need to be sampled for the remaining permit term and the reason sampling was not conducted should be noted in the self-monitoring report. Results of the monthly monitoring shall be submitted with the electronic self-monitoring reports that are submitted to the State Water Board's CIWQS Program website in accordance with Attachment E, Section X.B.1. Each individual monitoring event shall provide representative sample results for the effluent and upstream receiving water.

B. **Concurrent Sampling.** Effluent and receiving water sampling shall be performed at approximately the same time, on the same date.

C. **Sample type.** All effluent samples shall be taken as 24-hour flow proportioned composite samples, except for Volatile Organic Compounds and bis(2-ethylhexyl)phthalate. All receiving water samples shall be taken as grab samples.

D. **Additional Monitoring/Reporting Requirements.** The Discharger shall conduct the monitoring and reporting in accordance with the General Monitoring Provisions and Reporting Requirements in Attachment E.

E. **Duplicate Monitoring.** If routine monitoring completed in accordance with Attachment E, Tables E-3 and E-5 includes a constituent listed in Table I-1, duplicate monitoring is not required.

Table I-1. Priority Pollutants and Other Constituents of Concern

CTR #	Constituent	CAS Number	Reporting Level[1] µg/L or noted
28	1,1-Dichloroethane	75343	0.5
30	1,1-Dichloroethene	75354	0.5
41	1,1,1-Trichloroethane	71556	0.5
42	1,1,2-Trichloroethane	79005	0.5
37	1,1,2,2-Tetrachloroethane	79345	0.5
75	1,2-Dichlorobenzene	95501	0.5
29	1,2-Dichloroethane	107062	0.5
	cis-1,2-Dichloroethene	156592	0.5
31	1,2-Dichloropropane	78875	0.5
101	1,2,4-Trichlorobenzene	120821	0.5
76	1,3-Dichlorobenzene	541731	0.5
32	1,3-Dichloropropene	542756	0.5
77	1,4-Dichlorobenzene	106467	0.5
17	Acrolein	107028	2
18	Acrylonitrile	107131	2
19	Benzene	71432	0.5
20	Bromoform	75252	0.5
34	Bromomethane	74839	1
21	Carbon tetrachloride	56235	0.5
22	Chlorobenzene (mono chlorobenzene)	108907	0.5
24	Chloroethane	75003	0.5
25	2- Chloroethyl vinyl ether	110758	1
26	Chloroform	67663	0.5
35	Chloromethane	74873	0.5

CTR #	Constituent	CAS Number	Reporting Level[1] µg/L or noted
23	Dibromochloromethane	124481	0.5
27	Dichlorobromomethane	75274	0.5
36	Dichloromethane	75092	0.5
33	Ethylbenzene	100414	0.5
88	Hexachlorobenzene	118741	1
89	Hexachlorobutadiene	87683	1
91	Hexachloroethane	67721	1
94	Naphthalene	91203	10
38	Tetrachloroethene	127184	0.5
39	Toluene	108883	0.5
40	trans-1,2-Dichloroethylene	156605	0.5
43	Trichloroethene	79016	0.5
44	Vinyl chloride	75014	0.5
	Methyl-tert-butyl ether (MTBE)	1634044	0.5
	Trichlorofluoromethane	75694	5
	1,1,2-Trichloro-1,2,2-Trifluoroethane	76131	10
	Styrene	100425	0.5
	Xylenes	1330207	0.5
60	1,2-Benzanthracene	56553	5
85	1,2-Diphenylhydrazine	122667	1
45	2-Chlorophenol	95578	2
46	2,4-Dichlorophenol	120832	1
47	2,4-Dimethylphenol	105679	2
49	2,4-Dinitrophenol	51285	5
82	2,4-Dinitrotoluene	121142	5
55	2,4,6-Trichlorophenol	88062	10
83	2,6-Dinitrotoluene	606202	5
50	2-Nitrophenol	25154557	10
71	2-Chloronaphthalene	91587	10
78	3,3'-Dichlorobenzidine	91941	5
62	3,4-Benzofluoranthene	205992	10
52	4-Chloro-3-methylphenol	59507	5
48	4,6-Dinitro-2-methylphenol	534521	10
51	4-Nitrophenol	100027	5
69	4-Bromophenyl phenyl ether	101553	10
72	4-Chlorophenyl phenyl ether	7005723	5

CTR #	Constituent	CAS Number	Reporting Level[1] µg/L or noted
56	Acenaphthene	83329	1
57	Acenaphthylene	208968	10
58	Anthracene	120127	10
59	Benzidine	92875	5
61	Benzo(a)pyrene (3,4-Benzopyrene)	50328	0.1
63	Benzo(g,h,i)perylene	191242	5
64	Benzo(k)fluoranthene	207089	2
65	Bis(2-chloroethoxy) methane	111911	5
66	Bis(2-chloroethyl) ether	111444	1
67	Bis(2-chloroisopropyl) ether	39638329	10
68	Bis(2-ethylhexyl) phthalate	117817	3
70	Butyl benzyl phthalate	85687	10
73	Chrysene	218019	5
81	Di-n-butylphthalate	84742	10
84	Di-n-octylphthalate	117840	10
74	Dibenzo(a,h)-anthracene	53703	0.1
79	Diethyl phthalate	84662	2
80	Dimethyl phthalate	131113	2
86	Fluoranthene	206440	10
87	Fluorene	86737	10
90	Hexachlorocyclopentadiene	77474	1
92	Indeno(1,2,3-c,d)pyrene	193395	0.05
93	Isophorone	78591	1
98	N-Nitrosodiphenylamine	86306	1
96	N-Nitrosodimethylamine	62759	5
97	N-Nitrosodi-n-propylamine	621647	5
95	Nitrobenzene	98953	10
53	Pentachlorophenol	87865	0.2
99	Phenanthrene	85018	5
54	Phenol	108952	1
100	Pyrene	129000	10
	Aluminum	7429905	50
1	Antimony	7440360	5
2	Arsenic	7440382	0.01
15	Asbestos	1332214	0.2 MFL >10um
	Barium	7440393	100

CTR #	Constituent	CAS Number	Reporting Level[1] µg/L or noted
3	Beryllium	7440417	1
4	Cadmium	7440439	0.25
5a	Chromium (total)	7440473	2
5b	Chromium (VI)	18540299	0.5
6	Copper	7440508	0.5
14	Cyanide	57125	5
	Fluoride	7782414	0.1
	Iron	7439896	100
7	Lead	7439921	0.5
8	Mercury	7439976	0.0002 (11)
	Manganese	7439965	20
	Molybdenum	7439987	1
9	Nickel	7440020	5
10	Selenium	7782492	5
11	Silver	7440224	1
12	Thallium	7440280	1
	Tributyltin	688733	0.002
13	Zinc	7440666	10
110	4,4'-DDD	72548	0.02
109	4,4'-DDE	72559	0.01
108	4,4'-DDT	50293	0.01
112	alpha-Endosulfan	959988	0.02
103	alpha-Hexachlorocyclohexane (BHC)	319846	0.01
	Alachlor	15972608	1
102	Aldrin	309002	0.005
113	beta-Endosulfan	33213659	0.01
104	beta-Hexachlorocyclohexane	319857	0.005
107	Chlordane	57749	0.1
106	delta-Hexachlorocyclohexane	319868	0.005
111	Dieldrin	60571	0.01
114	Endosulfan sulfate	1031078	0.05
115	Endrin	72208	0.01
116	Endrin Aldehyde	7421934	0.01
117	Heptachlor	76448	0.01
118	Heptachlor Epoxide	1024573	0.01
105	Lindane (gamma-Hexachlorocyclohexane)	58899	0.019

CTR #	Constituent	CAS Number	Reporting Level[1] µg/L or noted
119	PCB-1016	12674112	0.5
120	PCB-1221	11104282	0.5
121	PCB-1232	11141165	0.5
122	PCB-1242	53469219	0.5
123	PCB-1248	12672296	0.5
124	PCB-1254	11097691	0.5
125	PCB-1260	11096825	0.5
126	Toxaphene	8001352	0.5
	Atrazine	1912249	1
	Bentazon	25057890	2
	Carbofuran	1563662	5
	2,4-D	94757	10
	Dalapon	75990	10
	1,2-Dibromo-3-chloropropane (DBCP)	96128	0.01
	Di(2-ethylhexyl)adipate	103231	5
	Dinoseb	88857	2
	Diquat	85007	4
	Endothal	145733	45
	Ethylene Dibromide	106934	0.02
	Glyphosate	1071836	25
	Methoxychlor	72435	10
	Molinate (Ordram)	2212671	2
	Oxamyl	23135220	20
	Picloram	1918021	1
	Simazine (Princep)	122349	1
	Thiobencarb	28249776	1
16	2,3,7,8-TCDD (Dioxin)	1746016	5.00E-06
	2,4,5-TP (Silvex)	93765	1
	Diazinon	333415	0.25
	Chlorpyrifos	2921882	1
	Ammonia (as N)	7664417	
	Chloride	16887006	
	Flow		
	Hardness (as $CaCO_3$)		
	Foaming Agents (MBAS)		

CTR #	Constituent	CAS Number	Reporting Level[1] µg/L or noted
	Nitrate (as N)	14797558	2,000
	Nitrite (as N)	14797650	400
	pH		0.1
	Phosphorus, Total (as P)	7723140	
	Specific conductance (EC)		
	Sulfate		500
	Sulfide (as S)		
	Sulfite (as SO_3)		
	Temperature		
	Total Dissolved Solids (TDS)		
	Total Kjeldahl Nitrogen (TKN)		
	Total Organic Carbon (TOC)		
	Dissolved Organic Carbon (DOC)		

FOOTNOTES:
[1] The reporting levels required in Table I-1 for priority pollutant constituents are established based on Section 2.4.2 and Appendix 4 of the SIP.