CALIFORNIA REGIONAL WATER QUALITY CONTROL BOARD
CENTRAL VALLEY REGION

11020 Sun Center Drive, #200 Rancho Cordova, California 95670-6114
Phone (916) 464-3291 Ÿ Fax (916) 464-4645
http://www.waterboards.ca.gov/centralvalley

ORDER R5-2014-XXXX
NPDES NO. CA CA0083861

REVISED WASTE DISCHARGE REQUIREMENTS FOR AEROJET ROCKETDYNE, INC. GROUNDWATER EXTRACTION AND TREATMENT SYSTEMS ARGET, GET E/F, GET HA, GET J, GET KA, GET LA, GET LB GET AB, WHITE ROCK GET, SAILOR BAR PARK WELL, WELL 4665, GOLDEN STATE WATER WELLS AND LOW THREAT DISCHARGES SACRAMENTO COUNTY

The following Discharger is subject to waste discharge requirements (WDR's) set forth in this Order:

Table 1. Discharger Information

Discharger	**Aerojet Rocketdyne, Inc.**
Name of Facility	**Groundwater Extraction and Treatment Systems ARGET, GET E/F, GET HA, GET J, GET KA, GET LA, GET LB, GET AB, White Rock GET, Sailor Bar Park Well, WELL 4665, Golden State Water Wells and Low-Threat Discharges**
Facility Address	**Aerojet Road**
	Sacramento, CA 95813-6000
	Sacramento County

The Discharger is authorized to discharge from the discharge points as set forth Table 3 on page 2 of this order.

Table 2. Administrative Information

This Order was adopted on:	**xx xxxxxx xxxx**
This Order shall become effective on:	
This Order shall expire on:	
The Discharger shall file a Report of Waste Discharge as an application for reissuance of WDR's in accordance with title 23, California Code of Regulations, and an application for reissuance of a National Pollutant Discharge Elimination System (NPDES) permit no later than:	**180 days prior to the Order expiration date**
The U.S. Environmental Protection Agency (U.S. EPA) and the California Regional Water Quality Control Board, Central Valley Region have classified this discharge as follows:	**Minor discharge**

I, Pamela C. Creedon, Executive Officer, do hereby certify that this Order with all attachments is a full, true, and correct copy of the Order adopted by the California Regional Water Quality Control Board, Central Valley Region, on X October 2014.

PAMELA C. CREEDON, Executive Officer

Table 3. Discharge Location

Discharge Point	Effluent Description	Discharge Point Latitude	Discharge Point Longitude	Receiving Water
Outfall 001	Treated Groundwater from ARGET, GET E/F, GET J, GET AB, White Rock GET. Well 4665	38º, 38', 00" N	121º, 16', 07" W	Buffalo Creek to American River
Outfall 002	Treated Groundwater from GET LA	38º, 36', 29" N	121º, 18', 33" W	American River
Outfall 002A	Treated Groundwater from GET LB	38º, 37', 31" N	121º, 18', 13" W	Drainage Ditch to American River
Outfall 003	Outfall no longer proposed for use	38º, 36', 53" N	121º, 18', 10" W	Drainage Ditch to American River
Outfall 004	Treated Groundwater from GET KA and AC-6	38º, 36', 07" N	121º, 19', 02" W	Drainage Ditch to American River
Outfall 005	Treated Groundwater from AC-23	38º, 34', 46" N	121º, 19', 42" W	Boyd Station Channel to American River
Outfall 006	Treated Groundwater from GET HA an AC-18	38º, 32', 18" N	121º, 18', 59" W	Morrison Creek
Outfall 007	Treated Groundwater from Sailor Bar Well	38º, 37', 59" N	121º, 14', 21" W	Sailor Bar Pond
Outfall 008	Treated Groundwater from Various GETs	38º, 38', 6" N	121º, 13', 13" W	American River at Natomas Stilling Basin
Outfall 009	Treated Groundwater from Various GETs	38º, 38', 12" N	121º, 12', 11" W	Alder Creek – Tributary to the American River

Contents

I. Facility Information 4
II. Findings 4
III. Discharge Prohibitions 14
IV. Effluent Limitations and Discharge Specifications 14
A. Effluent Limitations – Discharge Points 001-017 14
1. Final Effluent Limitations – Discharges Point 001-017 14
2. Interim Effluent Limitations – Not Applicable .....
B. Land Discharge Specifications – Discharge Points 016 and 017 24
C. Recycling Specifications – Not Applicable 24
V. Receiving Water Limitations 24
A. Surface Water Limitations 24
B. Groundwater Limitations 26
VI. Provisions 27
A. Standard Provisions 27
B. Monitoring and Reporting Program (MRP) Requirements 30
C. Special Provisions 31
1. Reopener Provisions 31
2. Special Studies, Technical Reports and Additional Monitoring Requirements 32
3. Best Management Practices and Pollution Prevention 34
4. Construction, Operation and Maintenance Specifications 34
5. Sludge/Biosolids Treatment or Discharge Specifications 35
6. Other Special Provisions 35
7. Compliance Schedules 35
VII. Compliance Determination 35

Tables

Table 1. Discharger Information 1
Table 2. Administrative Information 1
Table 3. Discharge Location 2
Table 4. Effluent Limitations 13-22

Attachments

Attachment A – Definitions A-1
Attachment B – Map B-1
Attachment C – Flow Schematic 1
Attachment D – Standard Provisions 1
Attachment E – Monitoring and Reporting Program 1
Attachment F – Fact Sheet 1
Attachment G – Summary of Reasonable Potential Analysis for Constituents of Concern E-1
Attachment H– Effluent and Receiving Water Characterization Study H-1
Attachment I – Dioxin and Furan Sampling I-1

I. FACILITY INFORMATION

Information describing the Aerojet Groundwater Extraction and Treatment Facilities is summarized in the table below and in sections I and II of the Fact Sheet (Attachment F). Section I of the Fact Sheet also includes information regarding the Facility's permit application.

A. The following Discharger is authorized to discharge in accordance with the conditions set forth in this Order:

Discharger	Aerojet Rocketdyne, Inc.
Name of Facility	Groundwater Extraction and Treatment Systems
Facility Address	Aerojet Road Sacramento, CA 95813-6000 Sacramento County
Facility Contact, Title, and Phone	Mr. Ben Dutro, (916) 355-5150
Mailing Address	P.O. Box 13222 Sacramento, CA 95813-6000
Type of Facility	Groundwater Extraction and Treatment Plants
Facility Design Flows	ARGET – 5.04 million gallons per day (mgd) – Discharge 001,Outfall 001 GET E/F – 11.52 mgd – Discharge 002, Outfall 001 GET HA – 3.46 mgd – Discharge 004, Outfall 005 and/or 006 GET J – 6.75 mgd – Discharge 005, Outfall 001 GET KA– 4.03 mgd – Discharge 007, Outfall 004 GET LA – 2.88 mgd – Discharge 008, Outfall 002 GET LB – 1.44 mgd – Discharge 009, Outfall 002 Sailor Bar Pond – 0.58 mgd – Discharge 010, Outfall 007 AC-6 – 1.08 mgd – Discharge 013, Outfall 004 AC-18 – 2.59 mgd - Discharge 014, Outfall 006 AC-23 – 3.17 mgd – Discharge 015, Outfall 006 GET AB – 5.76 mgd- Discharge 016, Outfall 001 White Rock GET – 1.3 mgd-Discharge 017, Outfall 001 Well 4665 – 1.15 mgd-Discharge 018, Outfall 001

II. FINDINGS

The California Regional Water Quality Control Board, Central Valley Region (hereinafter Central Valley Water Board), finds:

A. Background. The Aerojet Rocketdyne, Inc. (hereafter, Discharger) is currently discharging under Order No. R5-2011-088 and National Pollutant Discharge Elimination System (NPDES) Permit No. CA0083861. The Discharger originally submitted a Report of Waste Discharge, dated 11 April 2005 and supplemental information dated 28 April 2005 and 12 May 2005, and applied for a NPDES permit revision to discharge up to 39.09 mgd of treated groundwater from up to eleven groundwater extraction and treatment systems (GETs), with two of them being temporary**.**

The Discharger submitted a request dated 9 July 2007 to modify the effluent limitation for N-nitrosodimethylamine (NDMA) for GET J, and future treatment systems GET KA, GET LA and

GET LB. The adopted permit at the time, Order No. R5-2006-013, contained an interim effluent limit for NDMA for GET J of 0.010 micrograms per liter (µg/L) to allow an evaluation of the technical and economic issues regarding removal of NDMA. The Discharger provided sufficient information to allow the effluent limitation for NDMA for GETs J, K, LA and LB to be set at 0.007 µg/L. Further detailed discussion of this issue is found in Attachment F. In addition, in June 2007 the California Office of Health Hazard Assessment revised the Public Health Goal for NDMA from 0.002 µg/L to 0.003 µg/L. The Regional Water Board revised the NPDES permit with the adoption of Order No. R5-2007-0165, modifying the effluent limitations for NDMA.

In 2008, the Discharger requested a revision to the effluent limitation for trichloroethylene (TCE) for the GET E/F discharge (Discharge 002). The combination of treatment technologies at the GET E/F system, utilizing the best available technologies for removal of volatile organics (which includes TCE), NDMA and perchlorate was demonstrated to not consistently meet the effluent limitation for TCE due to low concentrations of biosolids carryover from the perchlorate treatment system. The original effluent limitations for TCE were 0.5 µg/L for the monthly average and 0.7 µg/L for the daily maximum. The Primary Maximum Contaminant Level for TCE is 5.0 µg/L and the California Public Health Goal (one-in-a-million excess cancer risk) has been established by the California Office of Health Hazard Assessment at 1.7 µg/L. Resolution No. R5-2009-0016 revised the Effluent Limitation for TCE for GET E/F to1.5 µg/L. None of the other discharge effluent limitations for TCE covered by the order were modified. The same issue applies to cis-1,2-DCE, a breakdown product of TCE and subject to the same carryover issue. This order applies a limit of 1.5 µg/L for cis-1,2-DCE for the discharge from GET E/F. The MCL for cis-1,2-DCE is 6 µg/l and the Public Health Goal is 100 ug/L.

Since adoption of Order No. R5-2007-0165, the Discharger completed the construction of GET K-A and discontinued the operation of interim GET K and interim GET H. The Discharger submitted a revised Report of Waste Discharge dated 21 May 2009 requesting the addition of three new discharges associated with municipal water supply wells and several minor modifications. Three municipal water supply wells will be equipped with treatment units to remove pollutants associated with plumes in groundwater emanating from the Discharger's property. The treated water would initially be discharged to the stormwater drainage system for two to four months prior to allowing the water to be supplied for potable purposes. One well would be operated on a continuous basis to help clean up the groundwater. Thus, at times, the treated water from the well would be discharged to the storm drain when the water was not needed for potable supply. The other two wells would be operated on an as-needed basis with the water going to the distribution system. All the wells would have periodic discharges of 1-2 minutes in duration during well startup and shutdown to minimize pressure issues within the distribution system.

The minor changes requested by the Discharger included:

a. Changing the names of GET L-1 to GET LB, GET L to GET LA, and GET K to GET KA;
b. moving the outfall from GET LA to the American River (Outfall 002) approximately 1,900 feet downstream; and
c. moving the discharge from GET KA from Outfall 003 to Outfall 004 in response to a request from the City of Rancho Cordova.

In addition, the Discharger requested allowing removal of the perchlorate treatment system on the Chettenham well, while continuing to operate the well with discharge to the storm drain in

order to evaluate the continued operation on groundwater pollution containment. The concentrations of perchlorate have dropped from a high of over 90 µg/L to less than 4 µg/L. The effluent limitation in the existing permit is 4 µg/L. The PHG and MCL for perchlorate are both 6 µg/L. The effluent limitation for perchlorate for the discharge from the Chettenham well treatment system is revised to 6 µg/L when there is no treatment system on the well. However, if treatment is subsequently restarted, the effluent reverts to the 4 µg/L value, based on best available technology.

Since adoption of Order No. R5-2010-0039, the Discharger has constructed the three treatment systems on the three municipal supply wells, AC-6, AC-18 and AC-23 and commenced operation of the AC-6 and AC-18 well systems. The construction and potential operation of the three systems has changed from what was anticipated in the 2010 revision to this permit.

Water is periodically discharged to the storm drain from each of these systems during startup and shutdown to ease pressure on the distribution system, and during ion exchange resin rinsing operations. These discharges are generally of low volume (1000-8000 gallons) and occur infrequently. There may be instances where the discharge will last up to four days if bacteria are found after resin change-out. These discharges fit within the parameters listed for Discharge Point 12.

During the initial testing of the treatment systems for AC-18 and AC-23, it was noted that fine particles entered the system during the first 10 minutes of startup of the water supply well. In order to prevent clogging of the ion exchange resin, the two systems were plumbed to allow the fines to dissipate prior to sending the water through the resin. Those first few minutes of flow are considered well purging and will be discharged to the storm drain under Discharge Point 12. Recently; however, the concentration of perchlorate at AC-18 exceeded the allowable discharge limitation for Discharge Point 12. As such, Aerojet has eliminated the possibility to discharge to the storm drain prior to the ion exchange treatment. The Discharger is currently evaluating options to remove solids from this water during initial startup. During this time, startup water is being discharged to the sanitary sewer. Subsequent discharges that are not during well startup and shutdown are covered under Discharge Point 13 for AC-6, Discharge Point 14 for AC-18 and Discharge Point 15 for AC-23. It is anticipated that these discharges will rarely occur.

The last change made to R5-2010-0039 was to the time schedule for compliance with the effluent limitation for the ARGET facility. As USEPA was delayed in its order to Aerojet to implement the Record of Decision for Operable Unit 5 (issued September 2011), that includes the ARGET facility, implementation of the remedy and upgrade of the ARGET facility has also been delayed. It was estimated that the construction of the perchlorate treatment facility at ARGET would occur by 1 December 2013. The schedule was changed to reflect this information.

The Board adopted Order No. R5-2011-0088 in December 2011 to include the changes in the preceding four paragraphs. Aerojet submitted a revised Report of Discharge on 8 March 2013 requesting several new changes be made to the permit. Order No. R5-2013-0155 was adopted in December 2013 to modify the permit accordingly. Those modifications included two additional treatment facilities and associated discharge options with those treatment facilities and the modifications of GET E/F and ARGET. The first of the additional facilities is GET AB located on the southeastern side of Aerojet. Construction combined the GET A and GET B treatment facilities that were constructed in the mid1980's. The new single

treatment system treats extracted groundwater to remove volatile organics, perchlorate and NDMA. Historically the effluent from the GET A and GET B facilities was discharged to Rebel Hill ditch where it percolated into the subsurface. The treated groundwater now has several different disposal options that could be used at any one time. The effluent can be placed into Aerojet's industrial water supply system, provided to Teichert Aggregates for use in the sand and gravel supply operation on Grant Line Road, discharged to Rebel Hill Ditch as has been done in the past, or discharged to Buffalo Creek on the Aerojet site. The discharge from Aerojet's industrial facilities that will utilize the water from GET AB is regulated by Order No. R5-2013-0156. The Teichert facility operates under Waste Discharge Requirements, Order No. R5-2002-0123. The Discharger may utilize any combination of the discharge options for GET AB at any given time. The GET AB facility has also been expanded to accommodate additional extraction wells with the construction of additional ultra-violet reactors and ion exchange vessels for the removal of volatile organic constituents, NDMA and perchlorate.

For the GET AB facility, the influent contains volatile organics consistently primarily of TCE, chloroform and Freon, perchlorate and NDMA. Concentrations in influent to the facility are up to 24 µg/L TCE, 55 µg/L 1,1-DCE, 4.7 µg/L NDMA, 64 µg/L perchlorate and 190 µg/l Freon 113.

The second additional treatment system is the White Rock GET. The White Rock GET is designed to intercept the downgradient portion of the groundwater contamination extending south from the former White Rock Road North Dump. The extraction system for the former dump has two separate components. The component at the southern edge of the former landfill is utilized to capture the high concentrations of volatile organics associated with the septage receiving facility on the dump. A chlorine system has been installed at this location to assist with preventing biofouling of these wells.The extracted groundwater from this component is piped (after chlorination) to the GET AB facility for treatment and discharge. The second component consists of two extraction wells farther to the south to capture the leading edge of the plume. The extracted groundwater is piped to the White Rock North Dump Treatment Facility. The water is treated to remove volatile organics and perchlorate. The treatment system also receives water from the Teichert water supply well. The White Rock North Dump Treatment facility and discharge was brought under Order R5-2013-0155. The treated water is supplied to the Teichert Aggregate Processing Plant on Grant Line Road for their sand and gravel supply operations or piped to GET AB for discharge.

For the White Rock GET the two extraction wells currently have VOCs – primarily TCE and cis-1,2-DCE, and perchlorate. NDMA is found in monitoring wells upgradient and non-detect (<0.39 ng/L) in the White Rock GET extraction wells. Aerojet is developing a plan to provide containment prior to the extraction wells. The permit requires sampling and effluent limits for NDMA in the event that capture is not provided in time. Recent data shows concentrations of TCE at 67 µg/L, 5.8 µg/L cis-1,2-DCE and 25 µg/L perchlorate in the extraction wells for the White Rock GET.

The extraction wells on the White Rock North Dump that are treated at GET B are experiencing biofouling problems. Prior to the permit revision, and while the discharge was going to Rebel Hill Ditch for infiltration, the Discharger evaluated the addition of sodium hypochlorite at the wells and measured the concentration in the discharge from GET AB. This evaluation showed that the addition of 50 mg/L of 12.5% sodium hypochlorite solution into each of the wells did not result in a chlorine residual greater than 0.01mg/L in the GET B effluent. An effluent limitation for chlorine and a requirement for monitoring chlorine have been included for GET AB.

GET E/F was modified to allow an increase in treatment capacity. This modification was needed to handle additional extraction wells to control plume migration. The expansion includes the addition of ion exchange vessels to remove perchlorate, an air stripping tower and bag filters to bring the treatment capacity to 8,000 gpm. The ion exchange units are used on the flow from those extraction wells that have low concentrations of perchlorate while the higher concentrations continue to be treated with the existing biological system. The modifications also include the addition of a screw press to dewater the biosolids generated by the biological perchlorate treatment system. A cationic emulsion based polyamide polymer used in drinking water treatment is used to assist in the dewatering of the solids in the screw press. The residual liquid from the screw press is returned to the influent to the clarifier, as described below in the facility descriptions section.

The ARGET facility was modified to allow it to receive the flows from the extraction wells that used to be connected to the GET D facility. That facility was removed from service to allow for future development of the property. The ARGET modifications include bag filters and ion exchange vessels to remove perchlorate.

R5-2013-0155 also allowed an increase in flow at the Sailor Bar GET discharge to Sailor Bar Pond from 250 gpm to 400 gpm to allow for additional extraction wells for capture of the groundwater contaminant plume in that area. Aerojet anticipates connecting the Sailor Bar system to the ARGET facility so only the amount of water necessary to keep the Sailor Bar Pond full is sent through the Sailor Bar treatment system. The remainder will be treated at ARGET.

Modifications in this Permit Revision

On 7 April 2014 the Discharger submitted a revised Report of Waste Discharge requesting the addition of an additional discharge and discharge point. The Discharger is in the process of constructing additional extraction wells in the area served by the GET J treatment facility. In order to provide some of the treatment capacity at GET J to treat the flow from the new extraction wells, the Discharger has requested that extraction Well 4665 be allowed to discharge without treatment to a storm drain that empties into Buffalo Creek just downstream of the discharge from GET J.

A review of the data from the extraction well, extraction and monitor wells in the vicinity of well 4665 and monitor wells upgradient of well 4665 was performed to evaluate the efficacy of the proposed discharge. The review of that data showed that there are consistent detections of TCE, NDMA and chloroform in well 4665. TCE and NDMA concentrations in well 4665 have steadily decreased since the well began operation in 2005. Since 2010 the concentrations of TCE ranged from a high of 3.3 µg/L in early 2010 to a low of 1.7 µg/L in the middle of 2013. NDMA concentrations over that same period have dropped to estimated concentrations of 0.0014J and 0.0015J µg/L in the latest sampling. Chloroform also dropped to below 0.8 µg/L in 2013/2014. Upgradient wells and wells in the vicinity of well 4665 have also had similar rates of decrease. This indicates that the concentrations should continue to decrease in well 4665. The concentrations of NDMA and chloroform currently found in, and projected to decrease, are less than the effluent limitation for GET J for those two pollutants. TCE is the only pollutant that is found in well 4665 that has a concentration higher than the GET J effluent limitation and the last sample from that well is at the Public Health Goal (incremental $1x10^{-6}$ excess cancer value) for TCE of 1.7 µg/L. Further, mixing with the discharge from GET J (assuming TCE is at the effluent limitation of 0.5 µg/L) reduces the concentration to 0.7 µg/L.

The concentration reduces even further if the flows from GET E/F and ARGET in Buffalo Creek are considered.

The effluent tables in the permit were modified by listing the individual volatile organic constituents for which the limits apply. The previous version of the effluent limit tables called for a limit on all constituents listed in EPA Method 8260, which includes well over one hundred constituents. Monitoring of the groundwater for volatile organics during the past 30 years has allowed the list of volatile organics of concern to be significantly reduced. This is particularly the case for the contaminant plumes that are farther downgradient from the source areas. The Discharger is still required to monitor and report results for the entire EPA Method 8260 short list suite of constituents.

Some additional text was added to help clarify the operation and effluent limitations for the discharges from Golden State Wells (AC-6, AC-18 and AC-23) and the treatment systems associated with each of the three wells. Modifications have been made to those systems which have ramifications on monitoring and points of discharge. In addition, the discharge from the Chettenham well has been deleted from the permit and the treatment system has been removed.

The discharge flow limit for GET HA was increased from 2000 gpm to 2400 gpm. The technologies utilized at GET HA can process higher flow rates than 2400 gpm as it would only cause an increase in GAC and ion exchange resin change outs. However, the plant is limited hydraulically by pressure buildup within the treatment vessels. It is estimated that the to contain the groundwater contaminant plume by GET HA pumping that an average flow of 2160 gpm is needed. During low pressure times flows up to 2400 can be processed and during higher pressure times the flow will likely be less than 2160 gpm. If it is found that sufficient flow to contain the contaminant plume cannot be handled by the existing system, then improvement will need to be made.

This permit also continues to allow Aerojet to discharge low-threat discharges consisting of monitor well, extraction well and water supply well development water, purge water and extraction and supply well aquifer test water. Those discharges are subject to similar effluent limitations as established for the GETs.

B. Legal Authorities. This Order serves as WDR's pursuant to article 4, chapter 4, division 7 of the California Water Code (commencing with section 13260).This Order is also issued pursuant to section 402 of the federal Clean Water Act (CWA) and implementing regulations adopted by the U.S. EPA and chapter 5.5, division 7 of the Water Code (commencing with section 13370). It shall serve as an NPDES permit for point source discharges from this facility to surface waters.

C. Background and Rationale for Requirements. The Central Valley Water Board developed the requirements in this Order based on information submitted as part of the application, through monitoring and reporting programs, and other available information. The Fact Sheet (Attachment F), which contains background information and rationale for the requirements in this Order, is hereby incorporated into and constitutes Findings for this Order. Attachments A through E and G through J are also incorporated into this Order.

D. California Environmental Quality Act (CEQA). Under Water Code section 13389, this action to adopt an NPDES permit is exempt from the provisions of CEQA, Public Resources Code sections 21100-21177.

E. Technology-based Effluent Limitations. Section 301(b) of the CWA and implementing USEPA permit regulations at section 122.44, title 40 of the Code of Federal Regulations (40 CFR 122.44), require that permits include conditions meeting applicable technology-based requirements at a minimum, and any more stringent effluent limitations necessary to meet applicable water quality standards. The discharge authorized by this Order must meet minimum federal technology-based requirements based on Best Professional Judgment (BPJ) in accordance with 40 CFR 125.3. A detailed discussion of the technology-based effluent limitations development is included in the Fact Sheet.

F. Water Quality-based Effluent Limitations (WQBELs). Section 301(b) of the CWA and 40 CFR 122.44(d) require that permits include limitations more stringent than applicable federal technology-based requirements where necessary to achieve applicable water quality standards. 40 CFR 122.44(d)(1)(i) mandates that permits include effluent limitations for all pollutants that are or may be discharged at levels that have the reasonable potential to cause or contribute to an exceedance of a water quality standard, including numeric and narrative objectives within a standard. Where reasonable potential has been established for a pollutant, but there is no numeric criterion or objective for the pollutant, WQBELs must be established using: (1) USEPA criteria guidance under CWA section 304(a), supplemented where necessary by other relevant information; (2) an indicator parameter for the pollutant of concern; or (3) a calculated numeric water quality criterion, such as a proposed state criterion or policy interpreting the state's narrative criterion, supplemented with other relevant information, as provided in 40 CFR 122.44(d)(1)(vi).

G. Water Quality Control Plans. The Central Valley Water Board adopted a *Water Quality Control Plan, Fourth Edition (Revised October 2011)*, for the Sacramento and San Joaquin River Basins (hereinafter Basin Plan) that designates beneficial uses, establishes water quality objectives, and contains implementation programs and policies to achieve those objectives for all waters addressed through the plan. The Basin Plan at page II-2.00 states that the "…*beneficial uses of any specifically identified water body generally apply to its tributary streams*." Table II-1 of the Basin Plan identifies the beneficial uses of certain specific water bodies. The Basin Plan does not specifically identify beneficial uses for Buffalo Creek, Alder Creek, Sailor Bar Pond or Morrison Creek, but does identify present and potential uses for the American River and Sacramento Rivers to which those creeks drain. In addition, the Basin Plan implements State Water Resources Control Board (State Water Board) Resolution No. 88-63, which established state policy that all waters, with certain exceptions, should be considered suitable or potentially suitable for municipal or domestic supply. Beneficial uses applicable to Buffalo Creek, Morrison Creek, Alder Creek, the Sacramento River, the American River and Sailor Bar Pond are as follows:

Discharge Point	Receiving Water Name	Beneficial Use(s)
001, 002 , 005, 016, 017, and 018	Buffalo Creek and Alder Creek, Tributary of the American River	Existing: MUN, AGR, REC-1, REC-2, WARM, COLD, MIGR, SPWN, WILD.
004 and 014	Morrison Creek, Tributary of the Sacramento River	Existing: MUN, AGR, REC-1, REC-2, WARM, COLD, MIGR, SPWN, WILD.
007, 008, 009, 012, 013 and 015	American River	Existing: MUN, AGR, REC-1, REC-2, WARM, COLD, MIGR, SPWN, WILD.
010	Sailor Bar Pond, Potentially tributary to American River	Existing: MUN, AGR, REC-1, REC-2, WARM, COLD, MIGR, SPWN, WILD.

H. National Toxics Rule (NTR) and California Toxics Rule (CTR). USEPA adopted the NTR on 22 December 1992, and later amended it on 4 May 1995 and November 1999. About 40 criteria in the NTR applied in California. On 18 May 2000, USEPA adopted the CTR. The CTR promulgated new toxics criteria for California and, in addition, incorporated the previously adopted NTR criteria that were applicable in the state. The CTR was amended on 13 February 2001. These rules contain water quality criteria for priority pollutants.

I. State Implementation Policy. On 2 March 2000, the State Water Board adopted the *Policy for Implementation of Toxics Standards for Inland Surface Waters, Enclosed Bays, and Estuaries of California* (State Implementation Policy or SIP). The SIP became effective on 28 April 2000 with respect to the priority pollutant criteria promulgated for California by USEPA through the NTR and to the priority pollutant objectives established by the Central Valley Water Board in the Basin Plan. The SIP became effective on 18 May 2000 with respect to the priority pollutant criteria promulgated by USEPA through the CTR. The State Water Board adopted amendments to the SIP on 24 February 2005 that became effective on 13 July 2005. The SIP establishes implementation provisions for priority pollutant criteria and objectives and provisions for chronic toxicity control. Requirements of this Order implement the SIP.

J. Compliance Schedules and Interim Requirements. In general, an NPDES permit must include final effluent limitations that are consistent with CWA section 301 and with 40 CFR 122.44(d). There are exceptions to this general rule. The State Water Board's *Policy for Compliance Schedules in National Pollutant Discharge Elimination System Permits* (Compliance Schedule Policy) allows compliance schedules for new, revised, or newly interpreted water quality objectives or criteria, or in accordance with a TMDL. All compliance schedules must be as short as possible, and may not exceed ten years from the effective date of the adoption, revision, or new interpretation of the applicable water quality objective or criterion, unless a TMDL allows a longer schedule. A Regional Water Board, however, is not required to include a compliance schedule, but may issue a Time Schedule Order pursuant to Water Code section 13300 or a Cease and Desist Order pursuant to Water Code section 13301 where it finds that the discharger is violating or threatening to violate the permit. The Regional Water Board will consider the merits of each case in determining whether it is appropriate to include a compliance schedule in a

permit, and, consistent with the Compliance Schedule Policy, should consider feasibility of achieving compliance, and must impose a schedule that is as short as possible to achieve compliance with the effluent limit based on the objective or criteria.

The Compliance Schedule Policy and the SIP do not allow compliance schedules for priority pollutants beyond 18 May 2010, except for new or more stringent priority pollutant criteria adopted by USEPA after 17 December 2008.

Where a compliance schedule for a final effluent limitation exceeds one year, the Order must include interim numeric limitations for that constituent or parameter, interim milestones and compliance reporting within 14 days after each interim milestone. The permit may also include interim requirements to control the pollutant, such as pollutant minimization and source control measures. This Order does not include compliance schedules and interim effluent limitations or discharge specifications.

K. Stringency of Requirements for Individual Pollutants. This Order contains both technology-based effluent limitations and WQBELs for individual pollutants. The technology-based effluent limitations consist of restrictions on flow, volatile organics, trichloroethylene, NDMA and perchlorate. The WQBELs consist of restrictions on acute and chronic whole effluent toxicity, chlorine residual, and pH. This Order's technology-based pollutant restrictions implement the minimum, applicable federal technology-based requirements.

WQBELs have been scientifically derived to implement water quality objectives that protect beneficial uses. Both the beneficial uses and the water quality objectives have been approved pursuant to federal law and are the applicable federal water quality standards. To the extent that toxic pollutant WQBELs were derived from the CTR, the CTR is the applicable standard pursuant to 40 CFR 131.38. The scientific procedures for calculating the individual WQBELs for priority pollutants are based on the CTR-SIP, which was approved by USEPA on 18 May 2000. All beneficial uses and water quality objectives contained in the Basin Plan were approved under state law and submitted to and approved by USEPA prior to 30 May 2000. Any water quality objectives and beneficial uses submitted to USEPA prior to 30 May 2000, but not approved by USEPA before that date, are nonetheless "*applicable water quality standards for purposes of the [Clean Water] Act*" pursuant to 40 CFR 131.21I(1). Collectively, this Order's restrictions on individual pollutants are no more stringent than required to implement the technology-based requirements of the CWA and the applicable water quality standards for purposes of the CWA.

L. Antidegradation Policy. 40 CFR 131.12 requires that the state water quality standards include an antidegradation policy consistent with the federal policy. The State Water Board established California's antidegradation policy in State Water Board Resolution No. 68-16. Resolution No. 68-16 incorporates the federal antidegradation policy where the federal policy applies under federal law. Resolution No. 68-16 requires that existing quality of waters be maintained unless degradation is justified based on specific findings. The Central Valley Water Board's Basin Plan implements, and incorporates by reference, both the state and federal antidegradation policies. As discussed in detail in the Fact Sheet, the permitted discharge is consistent with the antidegradation provision of 40 CFR 131.12 and Resolution No. 68-16.

M. Anti-Backsliding Requirements. Sections 303(d)(4) and 402(o)(2) of the CWA and federal regulations at 40 CFR 122.44(l) prohibit backsliding in NPDES permits. These anti-backsliding provisions require effluent limitations in a reissued permit to be as

stringent as those in the previous permit, with some exceptions. The effluent limitation for copper contained in Order No. R5-2011-0088 has been removed as the copper was determined to have come from the sampling taps which were made of brass. As discussed in detail in the Fact Sheet, this relaxation of effluent limitations is consistent with the anti-backsliding requirements of the CWA and federal regulations.

N. Monitoring and Reporting. 40 CFR 122.48 requires that all NPDES permits specify requirements for recording and reporting monitoring results. Water Code sections 13267 and 13383 authorize the Central Valley Water Board to require technical and monitoring reports. The Monitoring and Reporting Program establishes monitoring and reporting requirements to implement federal and State requirements. The Monitoring and Reporting Program is provided in Attachment E.

The technical and monitoring reports in this Order are required in accordance with Water Code section 13267, which states the following in subsection (b)(1), "*In conducting an investigation specified in subdivision (a), the regional board may require that any person who has discharged, discharges, or is suspected of having discharged or discharging, or who proposes to discharge waste within its region, or any citizen or domiciliary, or political agency or entity of this state who has discharged, discharges, or is suspected of having discharged or discharging, or who proposes to discharge, waste outside of its region that could affect the quality of waters within its region shall furnish, under penalty of perjury, technical or monitoring program reports which the regional board requires. The burden, including costs, of these reports shall bear a reasonable relationship to the need for the report and the benefits to be obtained from the reports. In requiring those reports, the regional board shall provide the person with a written explanation with regard to the need for the reports, and shall identify the evidence that supports requiring that person to provide the reports.*"

The Discharger owns and operates the Facility subject to this Order. The monitoring reports required by this Order are necessary to determine compliance with this Order. The need for the monitoring reports is discussed in the Fact Sheet.

O. Standard and Special Provisions. Standard Provisions, which apply to all NPDES permits in accordance with 40 CFR 122.41, and additional conditions applicable to specified categories of permits in accordance with 40 CFR 122.42, are provided in Attachment D. The discharger must comply with all standard provisions and with those additional conditions that are applicable under 40 CFR 122.42. The Central Valley Water Board has also included in this Order special provisions applicable to the Discharger. Some special provisions require submittal of technical reports. All technical reports are required in accordance with Water Code section 13267. The rationale for the special provisions and need for technical reports required in this Order are provided in the Fact Sheet.

P. Provisions and Requirements Implementing State Law - Not Applicable.

Q. Notification of Interested Parties. The Central Valley Water Board has notified the Discharger and interested agencies and persons of its intent to prescribe WDR's for the discharge and has provided them with an opportunity to submit their written comments and recommendations. Details of the notification are provided in the Fact Sheet.

R. Consideration of Public Comment. The Central Valley Water Board, in a public meeting, heard and considered all comments pertaining to the discharge. Details of the Public Hearing are provided in the Fact Sheet.

THEREFORE, IT IS HEREBY ORDERED that Order Nos. R5-2011-0088 and R5-2011-0025 are rescinded upon the effective date of this Order except for enforcement purposes, and, in order to meet the provisions contained in division 7 of the Water Code (commencing with section 13000) and regulations adopted thereunder, and the provisions of the CWA and regulations and guidelines adopted thereunder, the Discharger shall comply with the requirements in this Order. This action in no way prevents the Central Valley Water Board from taking enforcement action for past violations of the previous Order. If any part of this Order is subject to a temporary stay of enforcement, unless otherwise specified, the Discharger shall comply with the analogous portions of the previous Order, which shall remain in effect for all purposes during the pendency of the stay.

III. DISCHARGE PROHIBITIONS

A. Discharge of wastewater at a location or in a manner different from that described in the Findings is prohibited.

B. The by-pass or overflow of wastes to surface waters is prohibited, except as allowed by Federal Standard Provisions I.G. and I.H. (Attachment D).

C. Neither the discharge nor its treatment shall create a nuisance as defined in section 13050 of the Water Code.

D. The Discharger shall not allow pollutant-free wastewater to be discharged into the treatment or disposal, system in amounts that significantly diminish the system's capability to comply with this Order. Pollutant-free wastewater means rainfall, groundwater, cooling waters, and condensates that are essentially free of pollutants.

E. Discharge of wastewater to Outfall 008 and 009 is prohibited until approved by the Executive Officer. Completion of an adequate assessment of the thermal impacts, including a dilution study in Alder Creek/Lake Natoma, and potential impacts on the Natomas Fish Hatchery associated with those discharges at those two outfalls is required before consideration of approval by the Executive Officer.

IV. EFFLUENT LIMITATIONS AND DISCHARGE SPECIFICATIONS

A. Effluent Limitations – Discharge Points 001, 002, 004, 005, 007, 008, 009, 010, 011, 012, 013, 014, 015, 016, 017, and 018 (Discharge Points 003,006, and 011 are no longer used)

1. Final Effluent Limitations – Discharge Point 001

a. The Discharger shall maintain compliance with the following effluent limitations for the ARGET Facility at Discharge Point 001, with compliance measured at Monitoring Location M-001 as described in the Monitoring and Reporting Program, Attachment E:

Parameter	Units	Effluent Limitations			
		Average Monthly	Maximum Daily	Instantaneous Minimum	Instantaneous Maximum
Flow – Discharge 001	mgd	5.0	5.0	--	--
Trichloroethylene	µg/L	0.5	0.7	--	--
	lbs/day	0.02	0.03	--	--
Tetrachloroethylene	µg/L	0.5	0.7	--	--
	lbs/day	0.02	0.03	--	--
cis-1,2-Dichloroethylene	µg/L	0.5	0.7	--	--

Parameter	Units	Effluent Limitations			
		Average Monthly	Maximum Daily	Instantaneous Minimum	Instantaneous Maximum
	lbs/day	0.02	0.03	--	--
1,1-Dichloroethylene	µg/L	0.5	0.7	--	--
	lbs/day	0.02	0.03	--	--
Chloroform	µg/L	0.5	0.7	--	--
	lbs/day	0.02	0.03	--	--
1,1-Dichloroethane	µg/L	0.5	0.7	--	--
	lbs/day	0.02	0.03	--	--
1,4-Dioxane	µg/L	3	6	--	--
	lbs/day	0.125	0.25	--	--
N-nitrosodimethylamine	µg/L	0.002	0.010	--	--
	lbs/day	0.000083	0.00042	--	--
Perchlorate	µg/L	4	6	--	--
	lbs/day	0.167	0.25	--	--
pH	standard units	--	--	6.5	8.5

b. Survival of aquatic organisms in 96-hour bioassays shall be no less than 70% for any one bioassay and 90% for the median of any three or more consecutive bioassays.

c. **Chronic Whole Effluent Toxicity.** There shall be no chronic toxicity in the effluent discharge.

2. Final Effluent Limitations - Discharge Point 002

a. The Discharger shall maintain compliance with the following effluent limitations for the GET E/F at Discharge Point 002, with compliance measured at Monitoring Location M-002 as described in the Monitoring and Reporting Program, Attachment E:

Parameter	Units	Effluent Limitations			
		Average Monthly	Maximum Daily	Instantaneous Minimum	Instantaneous Maximum
Flow – Discharge 002	mgd	11.52	11.52	--	--
Tetrachloroethyolene	µg/L	0.5	0.7	--	--
	lbs/day	0.036	0.050	--	--
Trichloroethylene	µg/L	1.5, 3.0[1]	1.5, 3.0[1]	--	--
	lbs/day	0.15, 0.29[1]	0.15, 0.29[1]	--	--
cis-1,2-Dichlorethylene	µg/L	1.5	1.5	--	--
	lbs/day	0.15	0.15	--	--
1,1-Dichloroethane	µg/L	0.5	0.7	--	--
	lbs/day	0.036	0.050	--	--
Chloroform	µg/L	0.5	0.7	--	--
	lbs/day	0.036	0.050	--	--
1,1-Dichloroethylene	µg/L	0.5	0.7	--	--
	lbs/day	0.036	0.050	--	--
1,2-Dichloroethane	µg/L	0.38	0.5	--	--

Parameter	Units	Effluent Limitations			
		Average Monthly	Maximum Daily	Instantaneous Minimum	Instantaneous Maximum
	lbs/day	0.037	0.048	--	--
1,4-Dioxane	µg/L	3	6	--	--
	lbs/day	0.31	0.57	--	--
N-nitrosodimethylamine	µg/L	0.002	0.010	--	--
	lbs/day	0.0002	0.00096	--	--
Perchlorate	µg/L	4	6	--	--
	lbs/day	0.400	0.57	--	--
Acetaldehyde	µg/L	5	5	--	--
	lbs/day	0.51	0.51	--	--
Formaldehyde	µg/L	50	50	--	--
	lbs/day	5.1	5.1	--	--
Acrylamide	µg/L	0.05	0.05	--	--
	lbs/day	0.005	0.005	--	--
pH	standard units	--	--	6.5	8.5

1 The daily maximum value is 1.5 µg/L, except during times when the Discharger is making operational changes to correct effluent exceedances from GET E/F. During those times, the daily maximum effluent limitation is 3.0 µg/L when approved by the Executive Officer.

a. Survival of aquatic organisms in 96-hour bioassays shall be no less than 70% for any one bioassay and 90% for the median of any three or more consecutive bioassays.

b. **Chronic Whole Effluent Toxicity.** There shall be no chronic toxicity in the effluent discharge.

3. Final Effluent Limitations - Discharge Point 003.

a. This Discharge Point is no longer used as all extracted groundwater from Area 1 is sent to the GET HA (Discharge 004) facility.

4. Final Effluent Limitations - Discharge Point 004

a. The Discharger shall maintain compliance with the following effluent limitations for the GET HA facility at Discharge Point 004, with compliance measured at Monitoring Location M-004 as described in the Monitoring and Reporting Program, Attachment E:

b.

Parameter	Units	Effluent Limitations			
		Average Monthly	Maximum Daily	Instantaneous Minimum	Instantaneous Maximum
Flow – Discharge 004	mgd	3.46	3.46	--	--
Trichoroethylene	µg/L	0.5	0.7	--	--
	lbs/day	0.0144	0.02	--	--
Chloroform	µg/L	0.5	0.7	--	--
	lbs/day	0.0144	0.02	--	--

Parameter	Units	Effluent Limitations			
		Average Monthly	Maximum Daily	Instantaneous Minimum	Instantaneous Maximum
Perchlorate	µg/L	4	6	--	--
	lbs/day	0.115	0.17	--	--
pH	standard units	--	--	6.5	8.5

c. Survival of aquatic organisms in 96-hour bioassays shall be no less than 70% for any one bioassay and 90% for the median of any three or more consecutive bioassays.

d. **Chronic Whole Effluent Toxicity.** There shall be no chronic toxicity in the effluent discharge.

5. Final Effluent Limitations - Discharge Point 005

a. The Discharger shall maintain compliance with the following effluent limitations for the GET J Facility at Discharge Point 005, with compliance measured at Monitoring Location M-005 as described in the Monitoring and Reporting Program, Attachment E:

Parameter	Units	Effluent Limitations			
		Average Monthly	Maximum Daily	Instantaneous Minimum	Instantaneous Maximum
Flow – Discharge 005	mgd	6.75	6.75	--	--
Trichloroethylene	µg/L	0.5	0.7	--	--
	lbs/day	0.028	0.035	--	--
1,1-Dichlorethylene	µg/L	0.5	0.7	--	--
	lbs/day	0.028	0.040	--	--
cis-1,2-Dichloroethylene	µg/L	0.5	0.7	--	--
	lbs/day	0.028	0.040	--	--
N-nitrosodimethylamine	µg/L	0.007	0.010	--	--
	lbs/day	0.00040	0.00057	--	--
Perchlorate	µg/L	4	6	--	--
	lbs/day	0.23	0.34	--	--
pH	standard units	--	--	6.5	8.5
Chloroform	µg/L	3.0	5.0	--	--
	lbs/day	0.17	0.34	--	--

a. Survival of aquatic organisms in 96-hour bioassays shall be no less than 70% for any one bioassay and 90% for the median of any three or more consecutive bioassays.

b. **Chronic Whole Effluent Toxicity.** There shall be no chronic toxicity in the effluent discharge.

6. Final Effluent Limitations - Discharge Point 006

a. This Discharge Point is no longer used. The extracted groundwater is now being sent to GET KA described under Discharge Point 007.

7. Final Effluent Limitations - Discharge Point 007

a. The Discharger shall maintain compliance with the following effluent limitations for the GET KA Facility at Discharge Point 007, with compliance measured at Monitoring Location M-007 as described in the Monitoring and Reporting Program, Attachment E:

Parameter	Units	Effluent Limitations			
		Average Monthly	Maximum Daily	Instantaneous Minimum	Instantaneous Maximum
Flow – Discharge 007	mgd	4.03	4.03	--	--
Trichloroethylene	µg/L	0.5	0.7	--	--
	lbs/day	0.017	0.024	--	--
Tetrachloroethylene	µg/L	0.5	0.7	--	--
	lbs/day	0.017	0.024	--	--
Chloroform	µg/L	0.5	0.7	--	--
	lbs/day	0.017	0.024	--	--
N-nitrosodimethylamine	µg/L	0.007	0.010	--	--
	lbs/day	0.00023	0.00034	--	--
Perchlorate	µg/L	4	6	--	--
	lbs/day	0.134	0.202	--	--
pH	standard units	--	--	6.5	8.5

b. Survival of aquatic organisms in 96-hour bioassays shall be no less than 70% for any one bioassay and 90% for the median of any three or more consecutive bioassays.

c. **Chronic Whole Effluent Toxicity.** There shall be no chronic toxicity in the effluent discharge.

8. Final Effluent Limitations - Discharge Point 008

a. The Discharger shall maintain compliance with the following effluent limitations for the GET LA Facility at Discharge Point 008, with compliance measured at Monitoring Location M-008 as described in the Monitoring and Reporting Program, Attachment E:

Parameter	Units	Effluent Limitations			
		Average Monthly	Maximum Daily	Instantaneous Minimum	Instantaneous Maximum
Flow – Discharge 008	mgd	2.88	2.88	--	--
Trichloroethylene	µg/L	0.5	0.7	--	--
	lbs/day	0.012	0.017	--	--
1,1-Dichlorethane	µg/L	0.5	0.7	--	--
	lbs/day	0.012	0.017	--	--
N-nitrosodimethylamine	µg/L	0.007	0.010	--	--
	lbs/day	0.00017	0.00024	--	--
Perchlorate	µg/L	4	6	--	--
	lbs/day	0.096	0.14	--	--
pH	standard units	--	--	6.5	8.5

b. Survival of aquatic organisms in 96-hour bioassays shall be no less than 70% for any one bioassay and 90% for the median of any three or more consecutive bioassays.

c. **Chronic Whole Effluent Toxicity.** There shall be no chronic toxicity in the effluent discharge.

9. Final Effluent Limitations - Discharge Point 009

a. The Discharger shall maintain compliance with the following effluent limitations for the GET LB Facility at Discharge Point 009, with compliance measured at Monitoring Location M-009 as described in the Monitoring and Reporting Program, Attachment E:

Parameter	Units	Effluent Limitations			
		Average Monthly	Maximum Daily	Instantaneous Minimum	Instantaneous Maximum
Flow – Discharge 009	mgd	1.44	1.44	--	--
Trichloroethylene	µg/L	0.5	0.7	--	--
	lbs/day	0.006	0.0084	--	--
N-nitrosodimethylamine	µg/L	0.007	0.010	--	--
	lbs/day	0.000084	0.00012	--	--
Perchlorate	µg/L	4	6	--	--
	lbs/day	0.048	0.072	--	--
pH	standard units	--	--	6.5	8.5

b. Survival of aquatic organisms in 96-hour bioassays shall be no less than 70% for any one bioassay and 90% for the median of any three or more consecutive bioassays.

10. Final Effluent Limitations - Discharge Point 010

a. The Discharger shall maintain compliance with the following effluent limitations for the Sailor Bar Park Facility at Discharge Point 010, with compliance measured at Monitoring Location M-010 as described in the Monitoring and Reporting Program, Attachment E:

Parameter	Units	Effluent Limitations			
		Average Monthly	Maximum Daily	Instantaneous Minimum	Instantaneous Maximum
Flow – Discharge 010	mgd	0.58	0.58	--	--
Trichloroethylene	µg/L	0.5	0.7	--	--
	lbs/day	0.0025	0.0032	--	--
Tetrachloroethylene	µg/L	0.5	0.7	--	--
	lbs/day	0.0025	0.0032	--	--
1,1-Dichlorethyene	µg/L	0.5	0.7	--	--
	lbs/day	0.0025	0.0032	--	--
cis-1,2-Dichloroethylene	µg/L	0.5	0.7	--	--
	lbs/day	0.0025	0.0032	--	--
Perchlorate	µg/L	4	6	--	--
	lbs/day	0.0182	0.027	--	--

Parameter	Units	Effluent Limitations			
		Average Monthly	Maximum Daily	Instantaneous Minimum	Instantaneous Maximum
pH	standard units	--	--	6.5	8.5

b. Survival of aquatic organisms in 96-hour bioassays shall be no less than 70% for any one bioassay and 90% for the median of any three or more consecutive bioassays.

c. **Chronic Whole Effluent Toxicity.** There shall be no chronic toxicity in the effluent discharge.

11. Final Effluent Limitations - Discharge Point 011

a. The discharge from the Chettenham Well Facility no longer takes place and this Discharge point is no longer used.

12. Final Effluent Limitations - Discharge Point 012

a. The discharge of purge water and aquifer test water from monitor wells, extraction wells, and supply wells, including the intermittent start-up and shut-down discharges, and ion exchange rinses associated with Arden Cordova Wells AC-6, AC-18 and AC-23 shall maintain compliance with the following effluent limitations with compliance measured at Monitoring Point M-012, as described in the attached Monitoring and Reporting Program (Attachment E):

Parameter	Units	Effluent Limitations			
		Total Maximum Discharge[1]	Maximum Daily	Instantaneous Minimum	Instantaneous Maximum
Flow – Per Monitor Well	mgd	0.01	0.01	--	--
Flow – Per Aquifer Test or water supply well startup/shutdown[1]	million gallons	14.4	3.6	--	--
Volatile Organic Contaminants[2]	µg/L	--	5.0	--	--
1,4-Dioxane	µg/L		10	--	--
N-nitrosodimethylamine	µg/L		0.020	--	--
Perchlorate	µg/L		12	--	--
pH	Stand-ard units	--	--	6.5	8.5

[1] Based on a well purge or aquifer test rehabilitation at 2500 gpm for a duration of 4 days.
[2] All volatile organic constituents listed in EPA Method 8260B short list. The concentration of each constituent shall not exceed 5.0 µg/L, except for those constituents that have a specific limit in the table.

13. Final Effluent Limitations - Discharge Point 013

The Discharger shall maintain compliance with the following effluent limitations for the AC-6 Facility at Discharge Point 013, accept for start-up and shut-down discharges and ion exchange resin rinsing that have final effluent limits assigned under Discharge Point

12, with compliance measured at Monitoring Location M-013 as described in the Monitoring and Reporting Program, Attachment E:

Parameter	Units	Effluent Limitations			
		Average Monthly	Maximum Daily	Instantaneous Minimum	Instantaneous Maximum
Flow – Discharge 013	mgd	1.08	1.08	--	--
Trichloroethylene	µg/L	0.5	0.7	--	--
	lbs/day	0.0046	0.0064	--	--
Tetrachloroethene	µg/L	5.0	5.0	--	--
	lbs/day	0.046	0.046	--	--
Chloroform	µg/L	3.0	5.0	-	-
	lbs/day	0.028	0.028	-	-
Perchlorate	µg/L	4, 6[1]	6	--	--
	lbs/day	0.036, 0.055	0.055	--	--
pH	standard units	--	--	6.5	8.5

.
[1] When perchlorate treatment system is being used the monthly average limitation is 4 µg/L. When no treatment system is being used the monthly average is 6 µg/L.

a. Survival of aquatic organisms in 96-hour bioassays shall be no less than 70% for any one bioassay and 90% for the median of any three or more consecutive bioassays.

14. Final Effluent Limitations - Discharge Point 014

a. The Discharger shall maintain compliance with the following effluent limitations for the AC-18 Facility at Discharge Point 014, accept for start-up and shut-down discharges and ion exchange resin rinses that have final effluent limits assigned under Discharge Point 12, with compliance measured at Monitoring Location M-014 as described in the Monitoring and Reporting Program, Attachment E:

Parameter	Units	Effluent Limitations			
		Average Monthly	Maximum Daily	Instantaneous Minimum	Instantaneous Maximum
Flow – Discharge 014	mgd	2.59	2.59	--	--
Trichlorethylene	µg/L	0.5	0.7	--	--
	lbs/day	0.011	0.015	--	--
Perchlorate	µg/L	4, 6[1]	6	--	--
	lbs/day	0.086, 0.12	0.12	--	--
pH	standard units	--	--	6.5	8.5

[1] When perchlorate treatment system is being used the monthly average limitation is 4 µg/L. When no treatment system is being used the monthly average is 6 µg/L.

b. Survival of aquatic organisms in 96-hour bioassays shall be no less than 70% for any one bioassay and 90% for the median of any three or more consecutive bioassays.

15. Final Effluent Limitations - Discharge Point 015

a. The Discharger shall maintain compliance with the following effluent limitations for the AC-23 Facility at Discharge Point 015, accept for start-up and shut-down discharges and ion exchange resin rinses that have final effluent limits assigned under Discharge Point 12 with compliance measured at Monitoring Location M-015 as described in the Monitoring and Reporting Program, Attachment E:

Parameter	Units	Effluent Limitations			
		Average Monthly	Maximum Daily	Instantaneous Minimum	Instantaneous Maximum
Flow – Discharge 015	mgd	3.17	3.17	--	--
Trichloroethylene	µg/L	0.5	0.7	--	--
	lbs/day	0.013	0.018	--	--
Perchlorate	µg/L	4, 6[1]	6	--	--
	lbs/day	0.11, 0.16	0.16	--	--
pH	standard units	--	--	6.5	8.5

[1] When perchlorate treatment system is being used the monthly average limitation is 4 µg/L. When no treatment system is being used the monthly average is 6 µg/L.

b. Survival of aquatic organisms in 96-hour bioassays shall be no less than 70% for any one bioassay and 90% for the median of any three or more consecutive bioassays.

16. Final Effluent Limitations - Discharge Point 016

a. The Discharger shall maintain compliance with the following effluent limitations for the GET AB Facility at Discharge Point 016, with compliance measured at Monitoring Location M-016 as described in the Monitoring and Reporting Program, Attachment E:

Parameter	Units	Effluent Limitations			
		Average Monthly	Maximum Daily	Instantaneous Minimum	Instantaneous Maximum
Flow – Discharge 016	mgd	5.76	5.76	--	--
Trichloroethylene	µg/L	0.5	0.7	--	--
	lbs/day	0.024	0.034	--	--
1,2-Dichloroethane	µg/L	0.38	0.5	--	--
	lbs/day	0.019	0.024	--	--
Tetrachloroethylene	µg/L	0.5	0.7	--	--
	lbs/day	0.024	0.034		--
Chloroform	µg/L	0.5	0.7	--	--
	lbs/day	0.024	0.034	--	--
1,1-Dichloroethene	µg/L	0.5	0.7	--	--
	lbs/day	0.024	0.034	--	--
1,1,-Dichloroethane	µg/L	0.5	0.7	--	--
	lbs/day	0.024	0.034	--	--
cis-1,2-dichloroethylene	µg/L	0.5	0.7	--	--
	lbs/day	0.024	0.034	--	--
Freon-113	µg/L	0.5	0.7	--	--
	lbs/day	0.024	0.034	--	--

Parameter	Units	Effluent Limitations			
		Average Monthly	Maximum Daily	Instantaneous Minimum	Instantaneous Maximum
N-nitrosodimethylamine	µg/L	0.002	0.010	--	--
	lbs/day	0.00033	0.00049	--	--
Perchlorate	µg/L	4	6	--	--
	lbs/day	0.192	0.289	--	--
pH	standard units	--	--	6.5	8.5
Chlorine residual	mg/L	0.01	0.02		

b. Survival of aquatic organisms in 96-hour bioassays shall be no less than 70% for any one bioassay and 90% for the median of any three or more consecutive bioassays.

c. **Chronic Whole Effluent Toxicity.** There shall be no chronic toxicity in the effluent discharge.

17. Final Effluent Limitations - Discharge Point 017

a. The Discharger shall maintain compliance with the following effluent limitations for the White Rock Facility at Discharge Point 017, with compliance measured at Monitoring Location M-017 as described in the Monitoring and Reporting Program, Attachment E:

Parameter	Units	Effluent Limitations			
		Average Monthly	Maximum Daily	Instantaneous Minimum	Instantaneous Maximum
Flow – Discharge 017	mgd	1.3	1.3	--	--
Trichloroethylene	µg/L	0.5	0.7	--	--
	lbs/day	0.0054	0.0078	--	--
Tetrachloroehtylene	µg/L	0.5	0.7	--	--
	lbs/day	00.0054	0.0078	--	--
1,1-dichloroethane	µg/L	0.5	0.7		
	lbs/day	0.0054	0.0054		
cis-1,2-dichloroethylene	µg/L	0.5	0.7		
	lbs/day	0.0054	0.0054		
Chloroform	µg/L	0.5	0.7		
	lbs/day	0.0054	0.0054		
N-nitrosodimethylamine	µg/L	0.002	0.010	--	--
	lbs/day	0.0000022	0.00011	--	--
Perchlorate	µg/L	4	6	--	--
	lbs/day	0.043	0.652	--	--
pH	standard units	--	--	6.5	8.5

18. Final Effluent Limitations – Discharge Point 018

a. The Discharger shall maintain compliance with the following effluent limitations for Extraction Well 4665 at Discharge Point 018, with compliance measured at Monitoring Location M-018 as described in the Monitoring and Reporting Program, Attachment E:

Parameter	Units	Effluent Limitations			
		Average Monthly	Maximum Daily	Instantaneous Minimum	Instantaneous Maximum
Flow – Discharge 018	mgd	1.15	1.15	--	--
Trichloroethylene	µg/L	3	4	--	--
	lbs/day	0.029	0.038	--	--
Chloroform	µg/L	3	5		
	lbs/day	0.029	0.048		
N-nitrosodimethylamine	µg/L	0.007	0.010	--	--
	lbs/day	0.0000063	0.0001	--	--
Perchlorate	µg/L	4	6	--	--
	lbs/day	0.038	0.0.057	--	--
pH	standard units	--	--	6.5	8.5

b. Survival of aquatic organisms in 96-hour bioassays shall be no less than 70% for any one bioassay and 90% for the median of any three or more consecutive bioassays.

c. **Chronic Whole Effluent Toxicity.** There shall be no chronic toxicity in the effluent discharge.

B. Land Discharge Specifications – Discharge Points 016 and 017

a. The discharge shall not cause pollution or nuisance as defined by the California Water Code.

b. The discharge of treated groundwater from the White Rock GET shall only be to Teichert for their use at its Grant Line Road and/or Scott Road facilities, or to Rebel Hill Ditch, or to the Aerojet industrial water supply system, or to Buffalo Creek as shown on Attachment B3, a part of this Order**.**

c. The discharge of treated groundwater from the GET AB facility shall only be to Teichert for their use at its Grant Line Road and/or Scott Road facilities, or to Rebel Hill Ditch, or to the Aerojet industrial water supply system, or to Buffalo Creek as shown on Attachment B3, a part of this Order.

C. Recycling Specifications – Not Applicable

V. RECEIVING WATER LIMITATIONS

A. Surface Water Limitations

The discharge shall not cause the following in the Alder Creek, Buffalo Creek, Morrison Creek, and the American River:

1. **Bacteria.** The fecal coliform concentration, based on a minimum of not less than five samples for any 30-day period, to exceed a geometric mean of 200 MPN/100 mL, nor more than 10 percent of the total number of fecal coliform samples taken during any 30-day period to exceed 400 MPN/100 mL.

2. **Biostimulatory Substances.** Water to contain biostimulatory substances which promote aquatic growths in concentrations that cause nuisance or adversely affect beneficial uses.

3. **Chemical Constituents.** Chemical constituents to be present in concentrations that adversely affect beneficial uses.

4. **Color.** Discoloration that causes nuisance or adversely affects beneficial uses.

5. **Dissolved Oxygen:**

    a. The monthly median of the mean daily dissolved oxygen concentration to fall below 85 percent of saturation in the main water mass**;**

    b. The dissolved oxygen concentration to be reduced below 7.0 mg/L at any time.

6. **Floating Material.** Floating material to be present in amounts that cause nuisance or adversely affect beneficial uses.

7. **Oil and Grease.** Oils, greases, waxes, or other materials to be present in concentrations that cause nuisance, result in a visible film or coating on the surface of the water or on objects in the water, or otherwise adversely affect beneficial uses.

8. **pH.** The pH to be depressed below 6.5 nor raised above 8.5.

9. **Pesticides:**

    a. Pesticides to be present, individually or in combination, in concentrations that adversely affect beneficial uses;

    b. Pesticides to be present in bottom sediments or aquatic life in concentrations that adversely affect beneficial uses;

    c. Total identifiable persistent chlorinated hydrocarbon pesticides to be present in the water column at concentrations detectable within the accuracy of analytical methods approved by USEPA or the Executive Officer [

    d. Pesticide concentrations to exceed those allowable by applicable antidegradation policies (see State Water Board Resolution No. 68-16 and 40 CFR 131.12.);

    e. Pesticide concentrations to exceed the lowest levels technically and economically achievable;

    f. Pesticides to be present in concentration in excess of the maximum contaminant levels set forth in CCR, Title 22, division 4, chapter 15; nor

g. Thiobencarb to be present in excess of 1.0 µg/L.

10. Radioactivity:

a. Radionuclides to be present in concentrations that are harmful to human, plant, animal, or aquatic life nor that result in the accumulation of radionuclides in the food web to an extent that presents a hazard to human, plant, animal, or aquatic life.

b. Radionuclides to be present in excess of the maximum contaminant levels (MCLs) specified in Table 64442 of section 64442 and Table 64443 of section 64443 of Title 22 of the California Code of Regulations.

11. Suspended Sediments. The suspended sediment load and suspended sediment discharge rate of surface waters to be altered in such a manner as to cause nuisance or adversely affect beneficial uses.

12. Settleable Substances. Substances to be present in concentrations that result in the deposition of material that causes nuisance or adversely affects beneficial uses.

13. Suspended Material. Suspended material to be present in concentrations that cause nuisance or adversely affect beneficial uses.

14. Taste and Odors. Taste- or odor-producing substances to be present in concentrations that impart undesirable tastes or odors to fish flesh or other edible products of aquatic origin, or that cause nuisance, or otherwise adversely affect beneficial uses

15. Temperature. The natural temperature to be increased by more than 5°F. Compliance to be determined based on the difference in temperature at upstream and downstream monitor points listed in Attachment E, Monitoring and Reporting Program.

16. Toxicity. Toxic substances to be present, individually or in combination, in concentrations that produce detrimental physiological responses in human, plant, animal, or aquatic life.

17. Turbidity.

a. Shall not exceed 2 Nephelometric Turbidity Units (NTU) where natural turbidity is less than 1 NTU;

b. Shall not increase more than 1 NTU where natural turbidity is between 1 and 5 NTUs;

c. Shall not increase more than 20 percent where natural turbidity is between 5 and 50 NTUs;

d. Shall not increase more than 10 NTU where natural turbidity is between 50 and 100 NTUs; nor

e. Shall not increase more than 10 percent where natural turbidity is greater than 100 NTUs.

B. Groundwater Limitations - Not Applicable

VI. PROVISIONS

A. Standard Provisions

1. The Discharger shall comply with all Standard Provisions included in Attachment D.

2. The Discharger shall comply with the following provisions. In the event that there is any conflict, duplication, or overlap between provisions specified by this Order, the more stringent provision shall apply:

   a. If the Discharger's wastewater treatment plant is publicly owned or subject to regulation by California Public Utilities Commission, it shall be supervised and operated by persons possessing certificates of appropriate grade according to Title 23, CCR, division 3, chapter 26.

   b. After notice and opportunity for a hearing, this Order may be terminated or modified for cause, including, but not limited to:

      i. violation of any term or condition contained in this Order;

      ii. obtaining this Order by misrepresentation or by failing to disclose fully all relevant facts;

      iii. a change in any condition that requires either a temporary or permanent reduction or elimination of the authorized discharge; and

      iv. a material change in the character, location, or volume of discharge.

      The causes for modification include:

      - *New regulations.* New regulations have been promulgated under section 405(d) of the CWA, or the standards or regulations on which the permit was based have been changed by promulgation of amended standards or regulations or by judicial decision after the permit was issued.

      - *Land application plans.* When required by a permit condition to incorporate a land application plan for beneficial reuse of sewage sludge, to revise an existing land application plan, or to add a land application plan.

      - *Change in sludge use or disposal practice.* Under 40 CFR 122.62(a)(1), a change in the Discharger's sludge use or disposal practice is a cause for modification of the permit. It is cause for revocation and reissuance if the Discharger requests or agrees.

      The Central Valley Water Board may review and revise this Order at any time upon application of any affected person or the Central Valley Water Board's own motion.

   c. If a toxic effluent standard or prohibition (including any scheduled compliance specified in such effluent standard or prohibition) is established under section 307(a) of the CWA, or amendments thereto, for a toxic pollutant that is present in the discharge authorized herein, and such standard or prohibition is more stringent than any limitation upon such pollutant in this Order, the Central Valley Water Board will revise or modify this Order in accordance with such toxic effluent standard or

prohibition.

The Discharger shall comply with effluent standards and prohibitions within the time provided in the regulations that establish those standards or prohibitions, even if this Order has not yet been modified.

d. This Order shall be modified, or alternately revoked and reissued, to comply with any applicable effluent standard or limitation issued or approved under sections 301(b)(2)(C) and (D), 304(b)(2), and 307(a)(2) of the CWA, if the effluent standard or limitation so issued or approved:

   i. Contains different conditions or is otherwise more stringent than any effluent limitation in the Order; or

   ii. Controls any pollutant limited in the Order.

   The Order, as modified or reissued under this paragraph, shall also contain any other requirements of the CWA then applicable.

e. The provisions of this Order are severable. If any provision of this Order is found invalid, the remainder of this Order shall not be affected.

f. The Discharger shall take all reasonable steps to minimize any adverse effects to waters of the State or users of those waters resulting from any discharge or sludge use or disposal in violation of this Order. Reasonable steps shall include such accelerated or additional monitoring as necessary to determine the nature and impact of the non-complying discharge or sludge use or disposal.

g. The Discharger shall ensure compliance with any existing or future pretreatment standard promulgated by USEPA under section 307 of the CWA, or amendment thereto, for any discharge to the municipal system.

h. A copy of this Order shall be maintained at the discharge facility and be available at all times to operating personnel. Key operating personnel shall be familiar with its content.

i. Safeguard to electric power failure:

   i. The Discharger shall provide safeguards to assure that, should there be reduction, loss, or failure of electric power, the discharge shall comply with the terms and conditions of this Order.

   ii. Upon written request by the Central Valley Water Board, the Discharger shall submit a written description of safeguards. Such safeguards may include alternate power sources, standby generators, retention capacity, operating procedures, or other means. A description of the safeguards provided shall include an analysis of the frequency, duration, and impact of power failures experienced over the past 5 years on effluent quality and on the capability of the Discharger to comply with the terms and conditions of the Order. The adequacy of the safeguards is subject to the approval of the Central Valley Water Board.

iii. Should the treatment works not include safeguards against reduction, loss, or failure of electric power, or should the Central Valley Water Board not approve the existing safeguards, the Discharger shall, within 90 days of having been advised in writing by the Central Valley Water Board that the existing safeguards are inadequate, provide to the Central Valley Water Board and USEPA a schedule of compliance for providing safeguards such that in the event of reduction, loss, or failure of electric power, the Discharger shall comply with the terms and conditions of this Order. The schedule of compliance shall, upon approval of the Central Valley Water Board, become a condition of this Order.

j. The Discharger, upon written request of the Central Valley Water Board, shall file with the Board a technical report on its preventive (failsafe) and contingency (cleanup) plans for controlling accidental discharges, and for minimizing the effect of such events. This report may be combined with that required under the Central Valley Water Board Standard Provision contained in section VI.A.2.i.ii of this Order.

The technical report shall:

i. Identify the possible sources of spills, leaks, untreated waste by-pass, and contaminated drainage. Loading and storage areas, power outage, waste treatment unit outage, and failure of process equipment, tanks and pipes should be considered.

ii. Evaluate the effectiveness of present facilities and procedures and state when they became operational.

iii. Predict the effectiveness of the proposed facilities and procedures and provide an implementation schedule containing interim and final dates when they will be constructed, implemented, or operational.

The Central Valley Water Board, after review of the technical report, may establish conditions which it deems necessary to control accidental discharges and to minimize the effects of such events. Such conditions shall be incorporated as part of this Order, upon notice to the Discharger.

k. A publicly owned treatment works whose waste flow has been increasing, or is projected to increase, shall estimate when flows will reach hydraulic and treatment capacities of its treatment and disposal facilities. The projections shall be made in January, based on the last 3 years' average dry weather flows, peak wet weather flows and total annual flows, as appropriate. When any projection shows that capacity of any part of the facilities may be exceeded in 4 years, the Discharger shall notify the Central Valley Water Board by 31 January. A copy of the notification shall be sent to appropriate local elected officials, local permitting agencies and the press. Within 120 days of the notification, the Discharger shall submit a technical report showing how it will prevent flow volumes from exceeding capacity or how it will increase capacity to handle the larger flows. The Central Valley Water Board may extend the time for submitting the report.

l. The Discharger shall submit technical reports as directed by the Executive Officer. All technical reports required herein that involve planning, investigation, evaluation, or design, or other work requiring interpretation and proper application of engineering

or geologic sciences, shall be prepared by or under the direction of persons registered to practice in California pursuant to California Business and Professions Code, sections 6735, 7835, and 7835.1. To demonstrate compliance with Title 16, CCR, sections 415 and 3065, all technical reports must contain a statement of the qualifications of the responsible registered professional(s). As required by these laws, completed technical reports must bear the signature(s) and seal(s) of the registered professional(s) in a manner such that all work can be clearly attributed to the professional responsible for the work.

m. The Central Valley Water Board is authorized to enforce the terms of this permit under several provisions of the Water Code, including, but not limited to, sections 13385, 13386, and 13387.

n. For publicly owned treatment works, prior to making any change in the point of discharge, place of use, or purpose of use of treated wastewater that results in a permanent decrease of flow in any portion of a watercourse, the Discharger must file a petition with the State Water Board, Division of Water Rights, and receive approval for such a change. (Water Code section 1211).

o. In the event the Discharger does not comply or will be unable to comply for any reason, with any prohibition, maximum daily effluent limitation, 1-hour average effluent limitation, or receiving water limitation contained in this Order, the Discharger shall notify the Central Valley Water Board by telephone (916) 464-3291 within 24 hours of having knowledge of such noncompliance, and shall confirm this notification in writing within 5 days, unless the Central Valley Water Board waives confirmation. The written notification shall include the information required by the Standard Provision contained in Attachment D section V.E.1. [40 CFR 122.41(l)(6)(i)].

p. Failure to comply with provisions or requirements of this Order, or violation of other applicable laws or regulations governing discharges from this facility, may subject the Discharger to administrative or civil liabilities, criminal penalties, and/or other enforcement remedies to ensure compliance. Additionally, certain violations may subject the Discharger to civil or criminal enforcement from appropriate local, state, or federal law enforcement entities.

q. In the event the Discharger does not comply or will be unable to comply for any reason, with any prohibition, or receiving water limitation of this Order, the Discharger shall notify the Central Valley Water Board by telephone (916) 464-3281 within 24 hours of having knowledge of such noncompliance, and shall confirm this notification in writing within five days, unless the Central Valley Water Board waives confirmation. The written notification shall state the nature, time, duration, and cause of noncompliance, and shall describe the measures being taken to remedy the current noncompliance and prevent recurrence including, where applicable, a schedule of implementation. Other noncompliance requires written notification as above at the time of the normal monitoring report.

B. Monitoring and Reporting Program (MRP) Requirements

The Discharger shall comply with the MRP, and future revisions thereto, in Attachment E.

C. Special Provisions

1. Reopener Provisions

a. Conditions that necessitate a major modification of a permit are described in 40 CFR 122.62, including, but not limited to:

i. If new or amended applicable water quality standards are promulgated or approved pursuant to section 303 of the CWA, or amendments thereto, this permit may be reopened and modified in accordance with the new or amended standards.

ii. When new information, that was not available at the time of permit issuance, would have justified different permit conditions at the time of issuance.

b. This Order may be reopened for modification, or revocation and reissuance, as a result of the detection of a reportable priority pollutant generated by special conditions included in this Order. These special conditions may be, but are not limited to, fish tissue sampling, whole effluent toxicity, monitoring requirements on internal waste stream(s), and monitoring for surrogate parameters. Additional requirements may be included in this Order as a result of the special condition monitoring data.

c. **Mercury.** If mercury is found to be causing toxicity based on acute or chronic toxicity test results, or if a TMDL program is adopted, this Order shall be reopened and the interim mass effluent limitation modified (higher or lower) or an effluent concentration limitation imposed. If the Central Valley Water Board determines that a mercury offset program is feasible for Dischargers subject to a NPDES permit, then this Order may be reopened to reevaluate the interim mercury mass loading limitation(s) and the need for a mercury offset program for the Discharger.

d. **Whole Effluent Toxicity.** As a result of a Toxicity Reduction Evaluation (TRE), this Order may be reopened to include a numeric chronic toxicity limitation, a new acute toxicity limitation, and/or a limitation for a specific toxicant identified in the TRE. Additionally, if the State Water Board revises the SIP's toxicity control provisions that would require the establishment of numeric chronic toxicity effluent limitations, this Order may be reopened to include a numeric chronic toxicity effluent limitation based on the new provisions.

f. **Constituent Study.** If after review of the study results it is determined that the discharge has reasonable potential to cause or contribute to an exceedance of a water quality objective this Order may be reopened and effluent limitations added for the subject constituents.

g. **Regional Monitoring Program.** The Central Valley Water Board is developing a Regional Monitoring Program for the Sacramento-San Joaquin Delta. This Order may be reopened to modify the monitoring requirements to implement the Regional Monitoring Program.

h. **Drinking Water Policy.** The Central Valley Water Board is developing a Drinking Water Policy. This Order may be reopened to incorporate monitoring of drinking water constituents to implement the Drinking Water Policy.

i. **Diazinon and Chlorpyrifos Basin Plan Amendment.** Central Valley Water Board staff is developing a Basin Plan Amendment to provide an implementation plan for NPDES-permitted domestic wastewater dischargers. This Order may be reopened to modify diazinon and chlorpyrifos effluent limitations, as appropriate, in accordance with an amendment to the Basin Plan.

2. Special Studies, Technical Reports and Additional Monitoring Requirements

a. **Toxicity Reduction Requirements**

If the discharge causes or contributes to chronic toxicity in the receiving water, a Toxicity Reduction Evaluation (TRE) shall be required as defined in Attachment A. The Central Valley Water Board shall require the Discharger to conduct a TRE if repeated tests reveal toxicity as a result of waste discharge under this Order. The Discharger shall take all reasonable steps to control toxicity once the source of toxicity is identified. Failure to conduct the required toxicity tests or a TRE shall result in the establishment of effluent limitations for chronic toxicity under this Order and/or appropriate enforcement action

Chronic Whole Effluent Toxicity. For compliance with the Basin Plan's narrative toxicity objective, this Order requires the Discharger to conduct chronic whole effluent toxicity (WET) testing, as specified in MRP section V. Furthermore, this Provision requires the Discharger to investigate the causes of, and identify corrective actions to reduce or eliminate effluent toxicity. If the discharge exceeds the numeric toxicity monitoring trigger during accelerated monitoring established in this Provision, the Discharger is required to initiate a Toxicity Reduction Evaluation (TRE) in accordance with an approved TRE Work Plan, and take actions to mitigate the impact of the discharge and prevent recurrence of toxicity. A TRE is a site-specific study conducted in a stepwise process to identify the source(s) of toxicity and the effective control measures for effluent toxicity. TREs are designed to identify the causative agents and sources of whole effluent toxicity, evaluate the effectiveness of the toxicity control options, and confirm the reduction in effluent toxicity. This Provision includes procedures for accelerated chronic toxicity monitoring and TRE initiation.

i. Accelerated Monitoring and TRE Initiation. When the numeric toxicity monitoring trigger is exceeded during regular chronic toxicity monitoring, and the testing meets all test acceptability criteria, the Discharger shall initiate accelerated monitoring as required in the Accelerated Monitoring Specifications. The Discharger shall initiate a TRE to address effluent toxicity if any WET testing results exceed the numeric toxicity monitoring trigger during accelerated monitoring.

ii. Numeric Toxicity Monitoring Trigger. The numeric toxicity monitoring trigger to initiate a TRE is >1 TUc (where TUc = 100/NOEC). The monitoring trigger is not an effluent limitation; it is the toxicity threshold at which the Discharger is required to begin accelerated monitoring and initiate a TRE.

iii. Accelerated Monitoring Specifications. If the numeric toxicity monitoring trigger is exceeded during regular chronic toxicity testing, the Discharger shall initiate accelerated monitoring within 14-days of notification by the laboratory of the exceedance. Accelerated monitoring shall consist of four chronic toxicity tests

conducted once every two weeks using the species that exhibited toxicity. The following protocol shall be used for accelerated monitoring and TRE initiation:

(a) If the results of four consecutive accelerated monitoring tests do not exceed the monitoring trigger, the Discharger may cease accelerated monitoring and resume regular chronic toxicity monitoring. However, notwithstanding the accelerated monitoring results, if there is adequate evidence of a pattern of effluent toxicity, the Executive Officer may require that the Discharger initiate a TRE.

(b) If the source(s) of the toxicity is easily identified (e.g., temporary plant upset), the Discharger shall make necessary corrections to the facility and shall continue accelerated monitoring until four consecutive accelerated tests do not exceed the monitoring trigger. Upon confirmation that the effluent toxicity has been removed, the Discharger may cease accelerated monitoring and resume regular chronic toxicity monitoring.

(c) If the result of any accelerated toxicity test exceeds the monitoring trigger, the Discharger shall cease accelerated monitoring and begin a TRE to investigate the cause(s) of, and identify corrective actions to reduce or eliminate effluent toxicity. Within thirty (30) days of notification by the laboratory of any test result exceeding the monitoring trigger during accelerated monitoring, the Discharger shall submit a TRE Action Plan to the Central Valley Water Board including, at minimum:

(1) Specific actions the Discharger will take to investigate and identify the cause(s) of toxicity, including a TRE WET monitoring schedule;

(2) Specific actions the Discharger will take to mitigate the impact of the discharge and prevent the recurrence of toxicity; and

(3) A schedule for these actions.

Within sixty (60) days of notification by the laboratory of the test results, the Discharger shall submit to the Central Valley Water Board a TRE Workplan for approval by the Executive Officer. The TRE Workplan shall outline the procedures for identifying the source(s) of, and reducing or eliminating effluent toxicity. The TRE Workplan must be developed in accordance with USEPA guidance[1].

b. **Thermal Impacts Associated with Discharge to Outfall 008 or 009.** The Discharger is not permitted to discharge to Outfall 008 and/or 009 until an adequate thermal impact assessment is completed for Outfall 008 and/or 009 that demonstrates that the discharge will not cause an unacceptable thermal impact on the receiving water. The study must demonstrate that the discharge will meet the Water Quality Objectives for temperature found in the Basin Plan. Those objectives state “the natural receiving water temperature of intrastate waters shall not be altered unless it can be demonstrated to the satisfaction of the Regional Water Board that such alteration in temperature does not affect beneficial uses” and “at no time or place shall the temperature of COLD or WARM intrastate waters be increased more than 5°F above the natural receiving water temperature”.

[1] See the Fact Sheet (Attachment F section VII.B.2.a.) for a list of USEPA guidance documents that must be considered in development of the TRE Workplan.

c. **Evaluation of Treatment Options for Discharge from AC-18 and AC-23.** As the discharges from these two water supply wells are not through the treatment plant, these low-threat, low-volume discharges from these two systems fall under Discharge Point 12 with an perchlorate effluent limitation of 12 µg/L. As the perchlorate concentration in the extracted groundwater has the potential to increase over time, when the effluent from the well is above 8 µg/L perchlorate for two consecutive months, the Discharger is required to submit a plan, within 90-days following the second month of exceedance, to assure the discharge from the well will be compliant with the perchlorate effluent limitation. The plan shall be executed upon approval by Regional Board staff.

3. Best Management Practices and Pollution Prevention – Not Applicable

4. Construction, Operation and Maintenance Specifications

a. **Operations and Maintenance Plan**:

Within 60-days of startup of a GET, the Discharger shall certify in writing to the Regional Water Board that it has developed an Operation and Maintenance Plan (O&M). O&M plans have already developed for GET E/F, ARGET, GET HA and GET J, GET KA, GET LA and GET LB under previous versions of the permit. The Discharger shall develop and implement the O&M plan to prevent or minimize the generation and discharge of wastes and pollutants to the waters of the United States and waters of the State. The Discharger shall develop and implement an O&M plan consistent with the following objectives:

i. Operations and Maintenance

1) Maintain in-system production and wastewater treatment technologies to prevent the overflow of any floating matter or bypassing of treatment technologies.

2) Inspect the treatment systems on a routine basis in order to identify and promptly repair any damage.

3) Ensure storage and containment of chemicals or other materials to prevent spillage or release into waters of the United States, or waters of the State.

4) Implement procedures for properly containing, cleaning, and disposing of any spilled material.

5) Assure that back power is available and working as required in Section VI.A.2.i of this Order.

ii. Recordkeeping

1) Keep records documenting the frequency of cleaning, inspections, maintenance and repairs.

iii. Training

1) Adequately train all relevant facility personnel in spill prevention and how to respond in the event of a spill in order to ensure the proper clean-up and disposal of spilled material.

2) Train staff on the proper operation and cleaning of production and wastewater treatment systems, including training in feeding procedures and proper use of equipment.

The Discharger shall ensure that its operations staff are familiar with the O&M Plan and have been adequately trained in the specific procedures it requires.

5. Sludge/Biosolids Treatment or Discharge Specifications

a. Collected screenings, sludges, and other solids, shall be disposed of in a manner approved by the Executive Officer and consistent *with Consolidated Regulations for Treatment, Storage, Processing, or Disposal of Solid Waste*, as set forth in Title 27, CCR, Division 2, Subdivision 1, Section 20005, et seq.

b. Any proposed change in solids disposal from a previously approved practice (as described in this Order) shall be reported to this office at least 90 days in advance of the change.

6. Other Special Provisions

a. The Discharger will be reporting results for all constituents from the analysis for volatile organics using EPA Method 8260B Short List under Attachment E, Monitoring and Reporting Program of this this order. The Discharger shall include in their cover letter a list of all positively identified constituents detected in the influent and effluent of the treatment system that do not have a specific effluent limitation. If any positively identified constituent has been found present in the effluent at a concentration above the Practical Quantitation Level during consecutive sampling periods, or more than three times in a twelve month period, the Discharger shall notify Regional Board staff and prepare an evaluation of the source of the pollutant and potential treatment options. If the constituent is found in the influent, then the permit may be reopened and an effluent limitation established for that pollutant.

b. The Discharger has effluent limitations for four pollutants on Discharge 018, Well 4665. As stated in the Findings on pages 8 and 9 of this Order, effluent limitations were established based on review of the groundwater data in the area at and upgradient of Well 4665, a review of the sampling data from Well 4665, water quality values for the four pollutants and available dilution from the discharge from three groundwater treatment plants upstream of the discharge from Well 4665. The assessment of the concentrations in the discharge shows a decreasing concentrations and the likelihood of continued decreasing concentrations in the well as groundwater concentrations in the capture zone of the well are showing a continual decrease. The current concentrations in the well are below the water quality objectives for the four pollutants. The discharge from GET J alone provides a 5 to 1 dilution for the Well 4665 discharge and provides over twice the dilution that would be needed to protect the receiving water at the water quality objectives if the discharge concentrations matched the highest concentrations since 2006 (occurred in 2007). Thus, to be protective, the discharge from Well 4665 is required to cease anytime GET J is not discharging. This analysis assumes that there is no dilution available from the discharges from GET EF and/or ARGET.

7. Compliance Schedules – Not Applicable

VII. COMPLIANCE DETERMINATION

A. Volatile Organic Compounds (VOCs) Average Monthly Effluent Limitation. VOCs include all constituents listed in USEPA 8260 Short List (Attachment I). The average monthly effluent limitation of less than 0.5 µg/L applies to each VOC, unless a separate effluent limit is listed for a particular VOC. When calculating the average monthly of each VOC, non-detect results shall be counted as one-half the detection level.

B. Chronic Whole Effluent Toxicity Effluent Limitation (Section IV.A.1), Compliance with the accelerated monitoring and TRE provisions of Provision VI.C.2.a shall constitute compliance with the effluent limitation.

ATTACHMENT A – DEFINITIONS

Arithmetic Mean (m)
Also called the average, is the sum of measured values divided by the number of samples. For ambient water concentrations, the arithmetic mean is calculated as follows:

Arithmetic mean = m= Sx / n where: Sx is the sum of the measured ambient water concentrations, and n is the number of samples.

Average Monthly Effluent Limitation (AMEL)
The highest allowable average of daily discharges over a calendar month, calculated as the sum of all daily discharges measured during a calendar month divided by the number of daily discharges measured during that month.

Average Weekly Effluent Limitation (AWEL)
The highest allowable average of daily discharges over a calendar week (Sunday through Saturday), calculated as the sum of all daily discharges measured during a calendar week divided by the number of daily discharges measured during that week.

Bioaccumulative
Those substances taken up by an organism from its surrounding medium through gill membranes, epithelial tissue, or from food and subsequently concentrated and retained in the body of the organism.

Carcinogenic
Pollutants are substances that are known to cause cancer in living organisms.

Coefficient of Variation (CV)
CV is a measure of the data variability and is calculated as the estimated standard deviation divided by the arithmetic mean of the observed values.

Daily Discharge
Daily Discharge is defined as either: (1) the total mass of the constituent discharged over the calendar day (12:00 am through 11:59 pm) or any 24-hour period that reasonably represents a calendar day for purposes of sampling (as specified in the permit), for a constituent with limitations expressed in units of mass or; (2) the unweighted arithmetic mean measurement of the constituent over the day for a constituent with limitations expressed in other units of measurement (e.g., concentration).

The daily discharge may be determined by the analytical results of a composite sample taken over the course of one day (a calendar day or other 24-hour period defined as a day) or by the arithmetic mean of analytical results from one or more grab samples taken over the course of the day.

For composite sampling, if 1 day is defined as a 24-hour period other than a calendar day, the analytical result for the 24-hour period will be considered as the result for the calendar day in which the 24-hour period ends.

Detected, but Not Quantified (DNQ)
DNQ are those sample results less than the Reporting Limit, but greater than or equal to the laboratory's MDL. Sample results reported as DNQ are estimated chemical concentrations.

Dilution Credit
Dilution Credit is the amount of dilution granted to a discharge in the calculation of a water quality-based effluent limitation, based on the allowance of a specified mixing zone. It is calculated from the

dilution ratio or determined through conducting a mixing zone study or modeling of the discharge and receiving water.

Effluent Concentration Allowance (ECA)
ECA is a value derived from the water quality criterion/objective, dilution credit, and ambient background concentration that is used, in conjunction with the coefficient of variation for the effluent monitoring data, to calculate a long-term average (LTA) discharge concentration. The ECA has the same meaning as waste load allocation (WLA) as used in U.S. EPA guidance (Technical Support Document For Water Quality-based Toxics Control, March 1991, second printing, EPA/505/2-90-001).

Enclosed Bays
Enclosed Bays means indentations along the coast that enclose an area of oceanic water within distinct headlands or harbor works. Enclosed bays include all bays where the narrowest distance between the headlands or outermost harbor works is less than 75 percent of the greatest dimension of the enclosed portion of the bay. Enclosed bays include, but are not limited to, Humboldt Bay, Bodega Harbor, Tomales Bay, Drake's Estero, San Francisco Bay, Morro Bay, Los Angeles-Long Beach Harbor, Upper and Lower Newport Bay, Mission Bay, and San Diego Bay. Enclosed bays do not include inland surface waters or ocean waters.

Estimated Chemical Concentration
The estimated chemical concentration that results from the confirmed detection of the substance by the analytical method below the ML value.

Estuaries
Estuaries means waters, including coastal lagoons, located at the mouths of streams that serve as areas of mixing for fresh and ocean waters. Coastal lagoons and mouths of streams that are temporarily separated from the ocean by sandbars shall be considered estuaries. Estuarine waters shall be considered to extend from a bay or the open ocean to a point upstream where there is no significant mixing of fresh water and seawater. Estuarine waters included, but are not limited to, the Sacramento-San Joaquin Delta, as defined in Water Code section 12220, Suisun Bay, Carquinez Strait downstream to the Carquinez Bridge, and appropriate areas of the Smith, Mad, Eel, Noyo, Russian, Klamath, San Diego, and Otay rivers. Estuaries do not include inland surface waters or ocean waters.

Inland Surface Waters
All surface waters of the state that do not include the ocean, enclosed bays, or estuaries.

Instantaneous Maximum Effluent Limitation
The highest allowable value for any single grab sample or aliquot (i.e., each grab sample or aliquot is independently compared to the instantaneous maximum limitation).

Instantaneous Minimum Effluent Limitation
The lowest allowable value for any single grab sample or aliquot (i.e., each grab sample or aliquot is independently compared to the instantaneous minimum limitation).

Maximum Daily Effluent Limitation (MDEL)
The highest allowable daily discharge of a pollutant, over a calendar day (or 24-hour period). For pollutants with limitations expressed in units of mass, the daily discharge is calculated as the total mass of the pollutant discharged over the day. For pollutants with limitations expressed in other units of measurement, the daily discharge is calculated as the arithmetic mean measurement of the pollutant over the day.

Median
The middle measurement in a set of data. The median of a set of data is found by first arranging the measurements in order of magnitude (either increasing or decreasing order). If the number of measurements (n) is odd, then the median = $X_{(n+1)/2}$. If n is even, then the median = $(X_{n/2} + X_{(n/2)+1})/2$ (i.e., the midpoint between the n/2 and n/2+1).

Method Detection Limit (MDL)
MDL is the minimum concentration of a substance that can be measured and reported with 99 percent confidence that the analyte concentration is greater than zero, as defined in in 40 C.F.R. part 136, Attachment B, revised as of July 3, 1999.

Minimum Level (ML)
ML is the concentration at which the entire analytical system must give a recognizable signal and acceptable calibration point. The ML is the concentration in a sample that is equivalent to the concentration of the lowest calibration standard analyzed by a specific analytical procedure, assuming that all the method specified sample weights, volumes, and processing steps have been followed.

Mixing Zone
Mixing Zone is a limited volume of receiving water that is allocated for mixing with a wastewater discharge where water quality criteria can be exceeded without causing adverse effects to the overall water body.

Not Detected (ND)
Sample results which are less than the laboratory's MDL.

Ocean Waters
The territorial marine waters of the State as defined by California law to the extent these waters are outside of enclosed bays, estuaries, and coastal lagoons. Discharges to ocean waters are regulated in accordance with the State Water Board's California Ocean Plan.

Persistent Pollutants
Persistent pollutants are substances for which degradation or decomposition in the environment is nonexistent or very slow.

Pollutant Minimization Program (PMP)
PMP means waste minimization and pollution prevention actions that include, but are not limited to, product substitution, waste stream recycling, alternative waste management methods, and education of the public and businesses. The goal of the PMP shall be to reduce all potential sources of a priority pollutant(s) through pollutant minimization (control) strategies, including pollution prevention measures as appropriate, to maintain the effluent concentration at or below the water quality-based effluent limitation. Pollution prevention measures may be particularly appropriate for persistent bioaccumulative priority pollutants where there is evidence that beneficial uses are being impacted. The Central Valley Water Board may consider cost effectiveness when establishing the requirements of a PMP. The completion and implementation of a Pollution Prevention Plan, if required pursuant to Water Code section 13263.3(d), shall be considered to fulfill the PMP requirements.

Pollution Prevention
Pollution Prevention means any action that causes a net reduction in the use or generation of a hazardous substance or other pollutant that is discharged into water and includes, but is not limited to, input change, operational improvement, production process change, and product reformulation (as defined in Water Code section 13263.3). Pollution prevention does not include actions that merely shift

a pollutant in wastewater from one environmental medium to another environmental medium, unless clear environmental benefits of such an approach are identified to the satisfaction of the State Water Resources Control Board (State Water Board) or Central Valley Water Board.

Practical Quantitation Limit (PQL)
The PQL is the lowest concentration level that can be reliably achieved within the specified limits of precision and accuracy during routine laboratory operating conditions.

Satellite Collection System
The portion, if any, of a sanitary sewer system owned or operated by a different public agency than the agency that owns and operates the wastewater treatment facility that a sanitary sewer system is tributary to.

Source of Drinking Water
Any water designated as suitable, or potentially suitable for municipal or domestic supply (MUN) in a Central Valley Water Board Basin Plan. Beneficial uses of a water body generally apply to its tributaries. Therefore, a MUN designation for a water body also applies to its tributaries.

Standard Deviation (s)
Standard Deviation is a measure of variability that is calculated as follows:

$$s = (å[(x - m)^2]/(n - 1))^{0.5}$$

where:
x is the observed value;
m is the arithmetic mean of the observed values; and
n is the number of samples.

Toxicity Reduction Evaluation (TRE)
TRE is a study conducted in a step-wise process designed to identify the causative agents of effluent or ambient toxicity, isolate the sources of toxicity, evaluate the effectiveness of toxicity control options, and then confirm the reduction in toxicity. The first steps of the TRE consist of the collection of data relevant to the toxicity, including additional toxicity testing, and an evaluation of facility operations and maintenance practices, and best management practices. A Toxicity Identification Evaluation (TIE) may be required as part of the TRE, if appropriate. (A TIE is a set of procedures to identify the specific chemical(s) responsible for toxicity. These procedures are performed in three phases (characterization, identification, and confirmation) using aquatic organism toxicity tests.)

ATTACHMENT B – MAPS

Attachment B-1 - Discharge and GET Locations

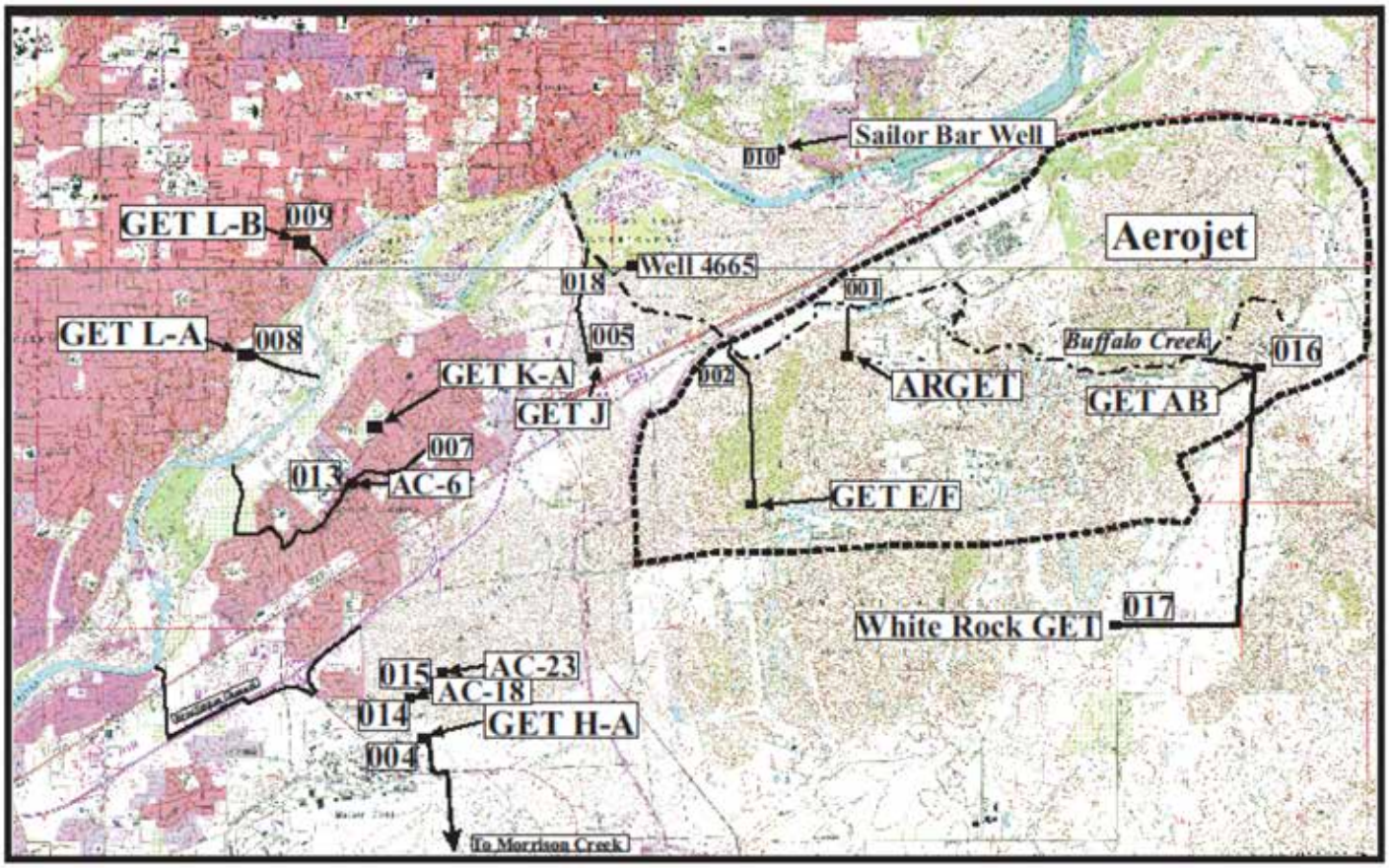

Attachment B-2 - Receiving Water Sample Locations

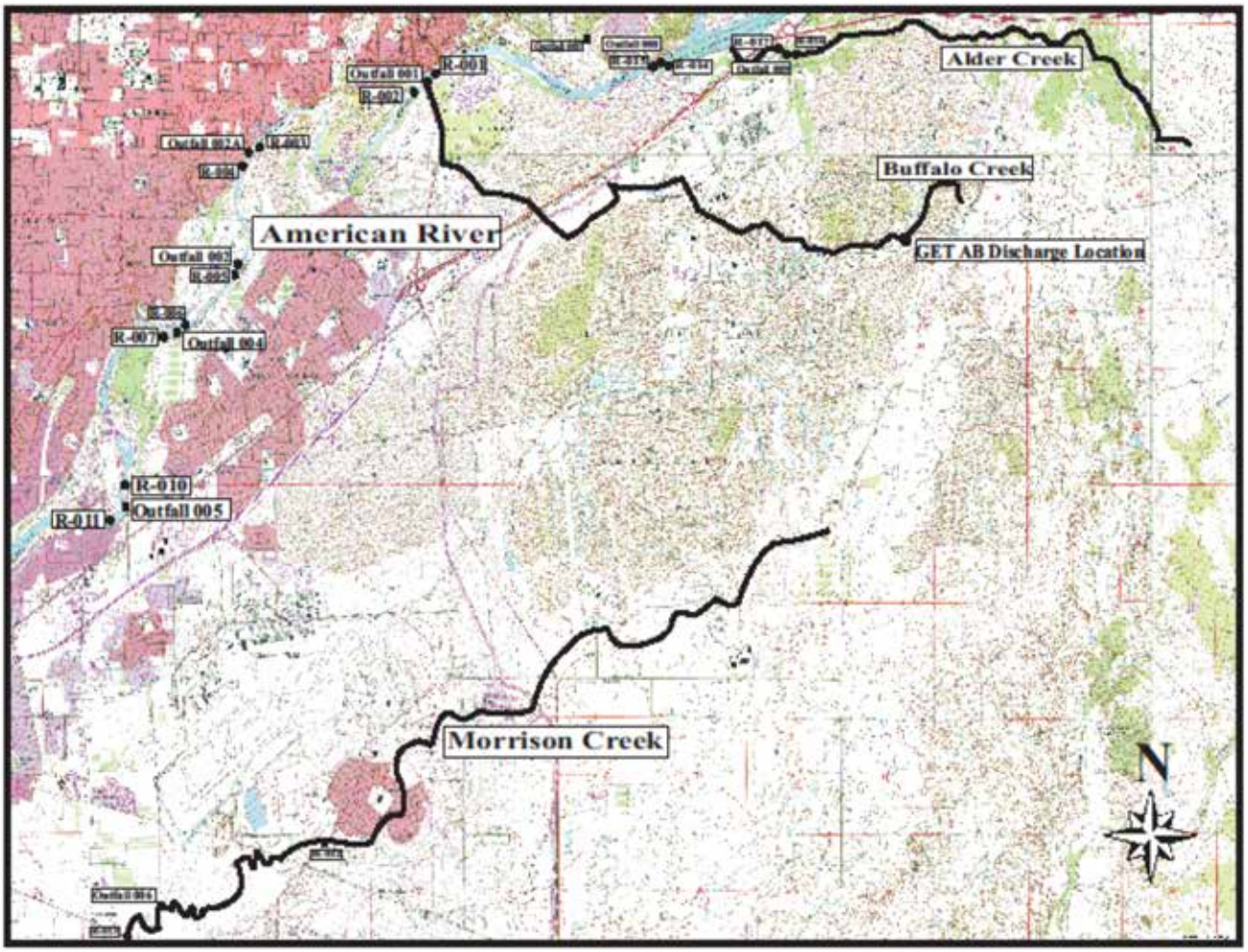

ATTACHMENT C – FLOW SCHEMATICS

Attachment C-1

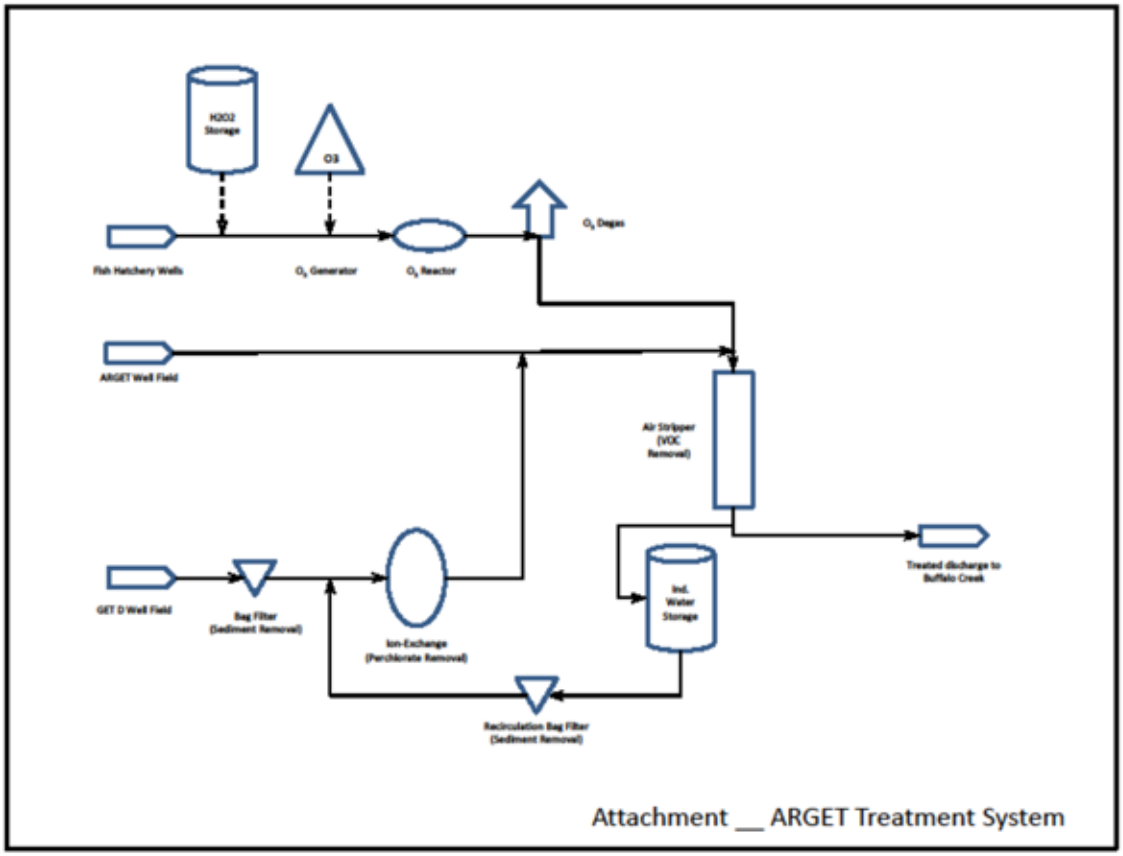

Attachment C-2

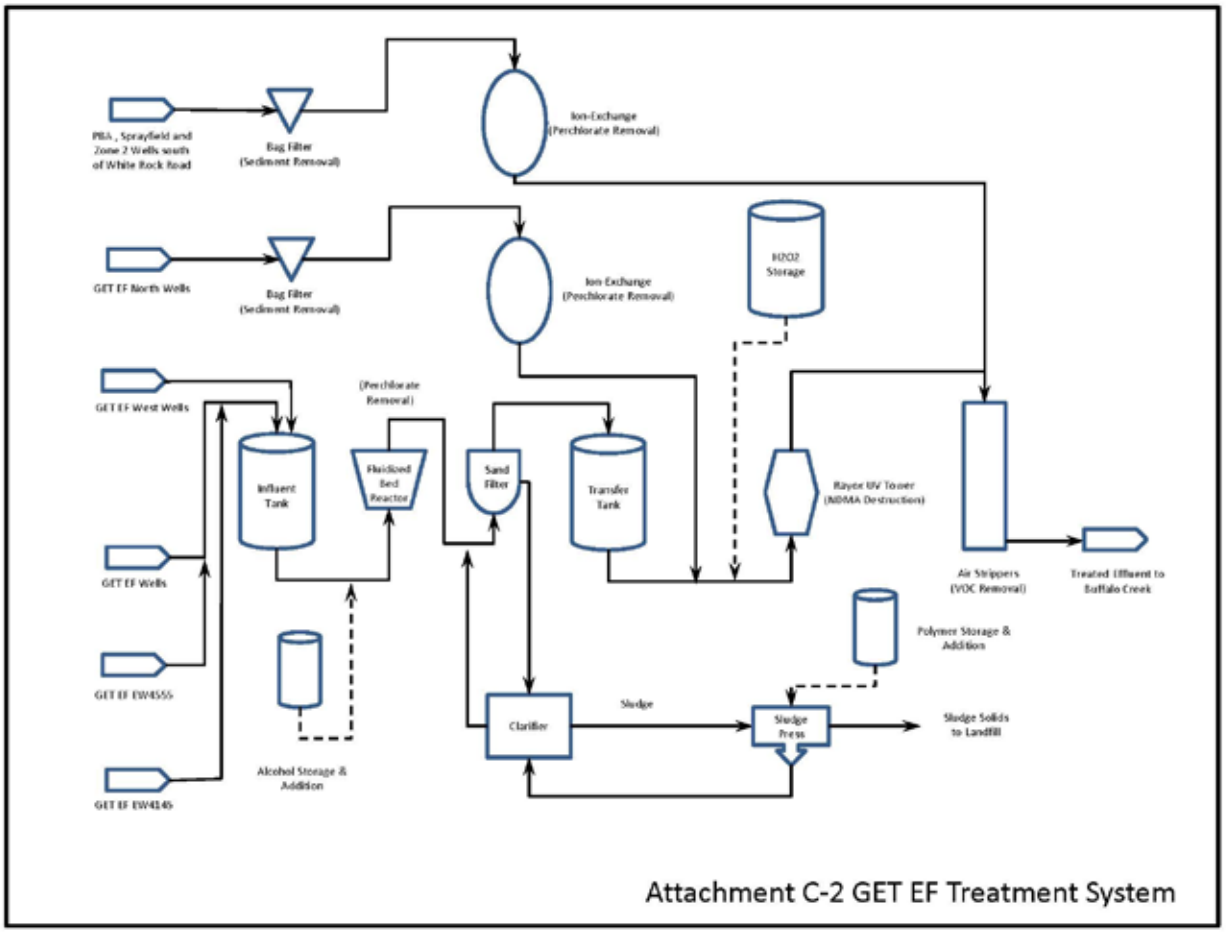

Attachment C-3

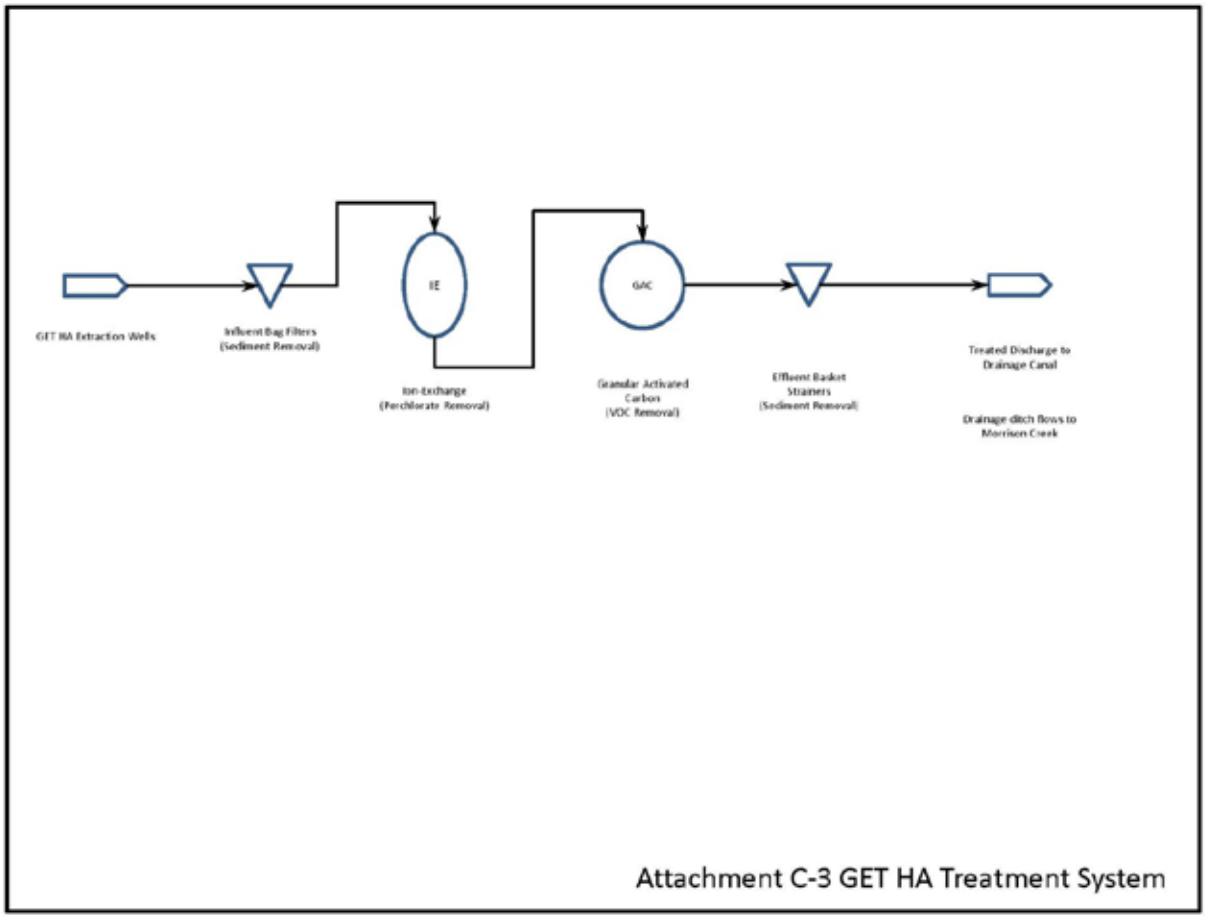

Attachment C-4

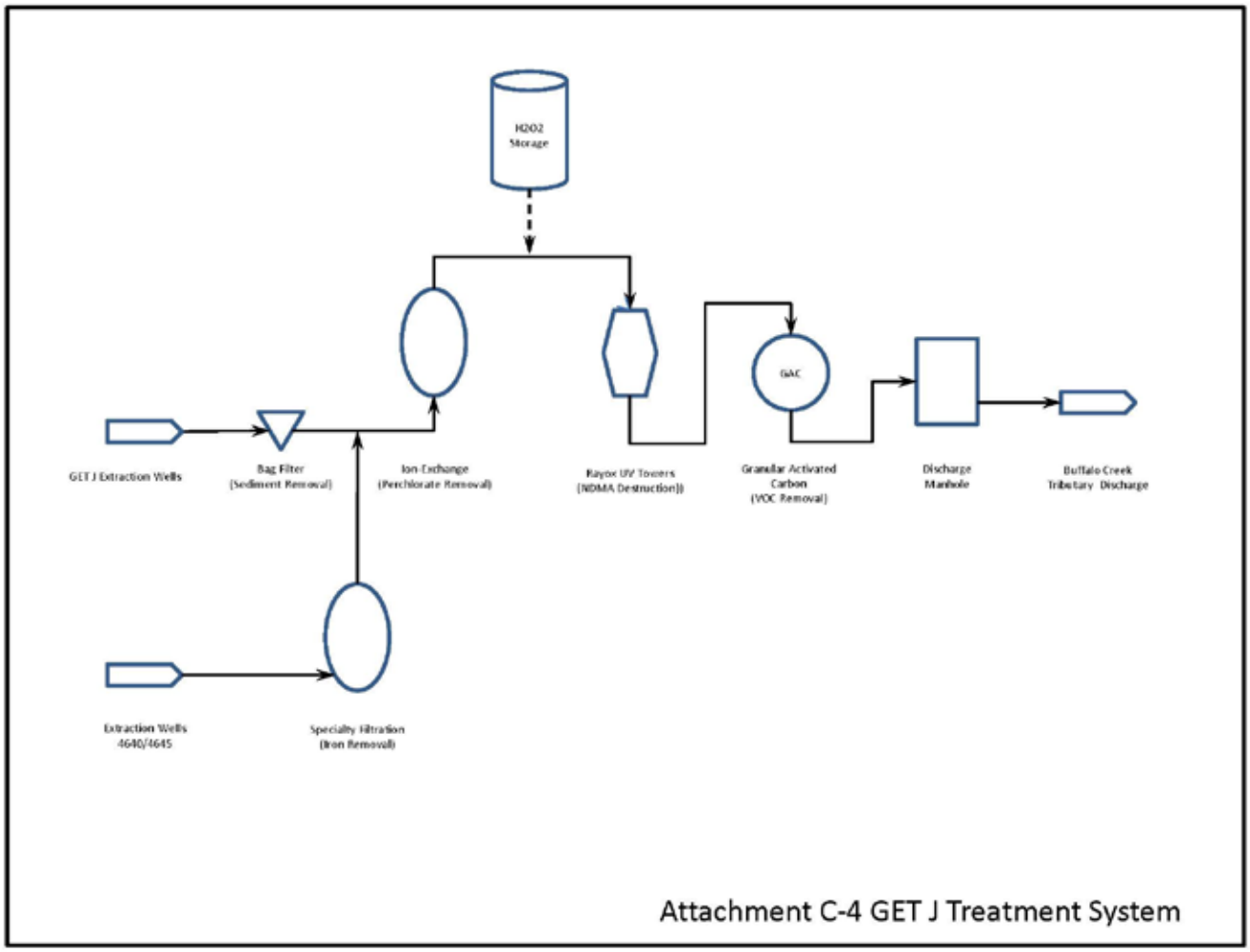

Attachment C-5

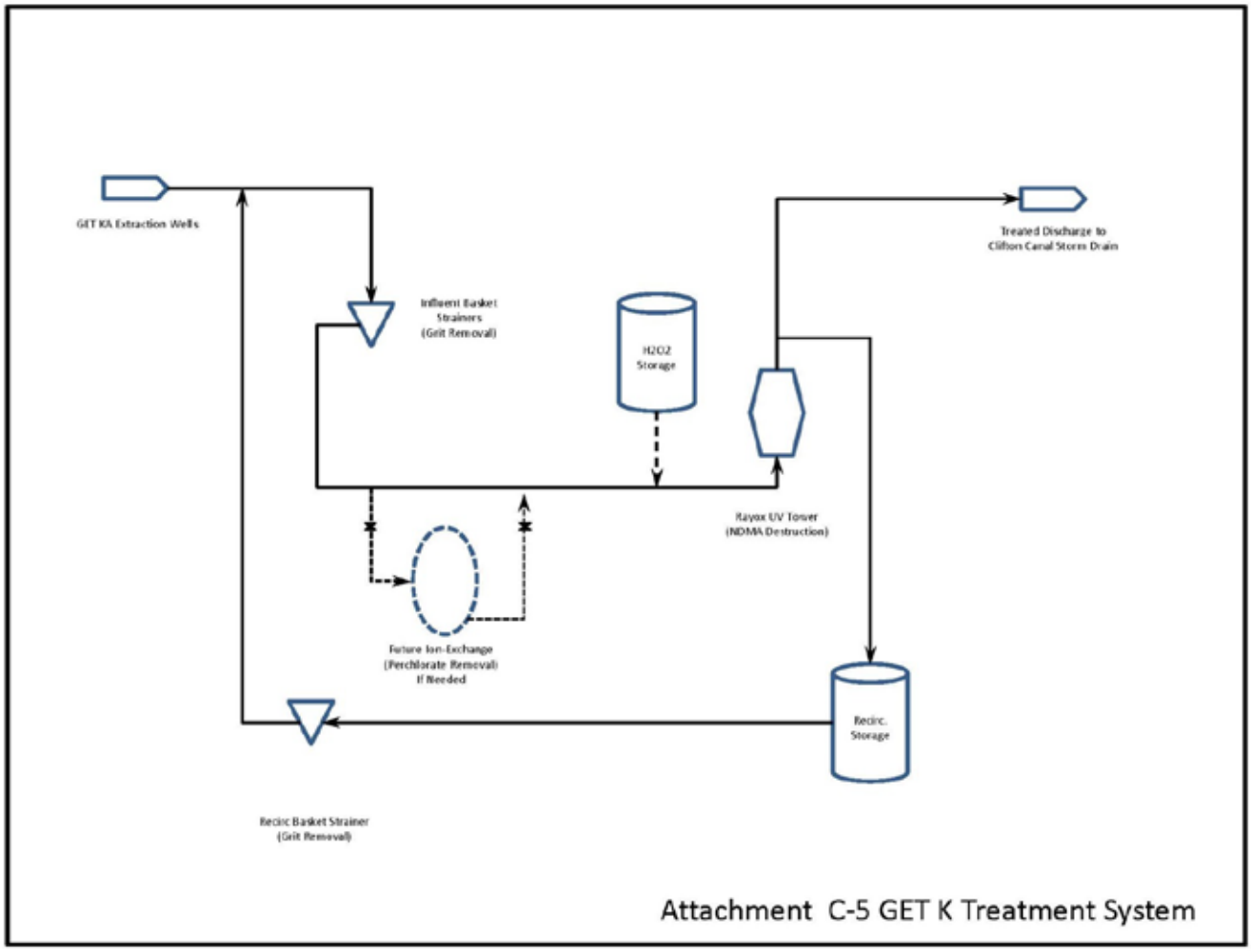

Attachment C-6

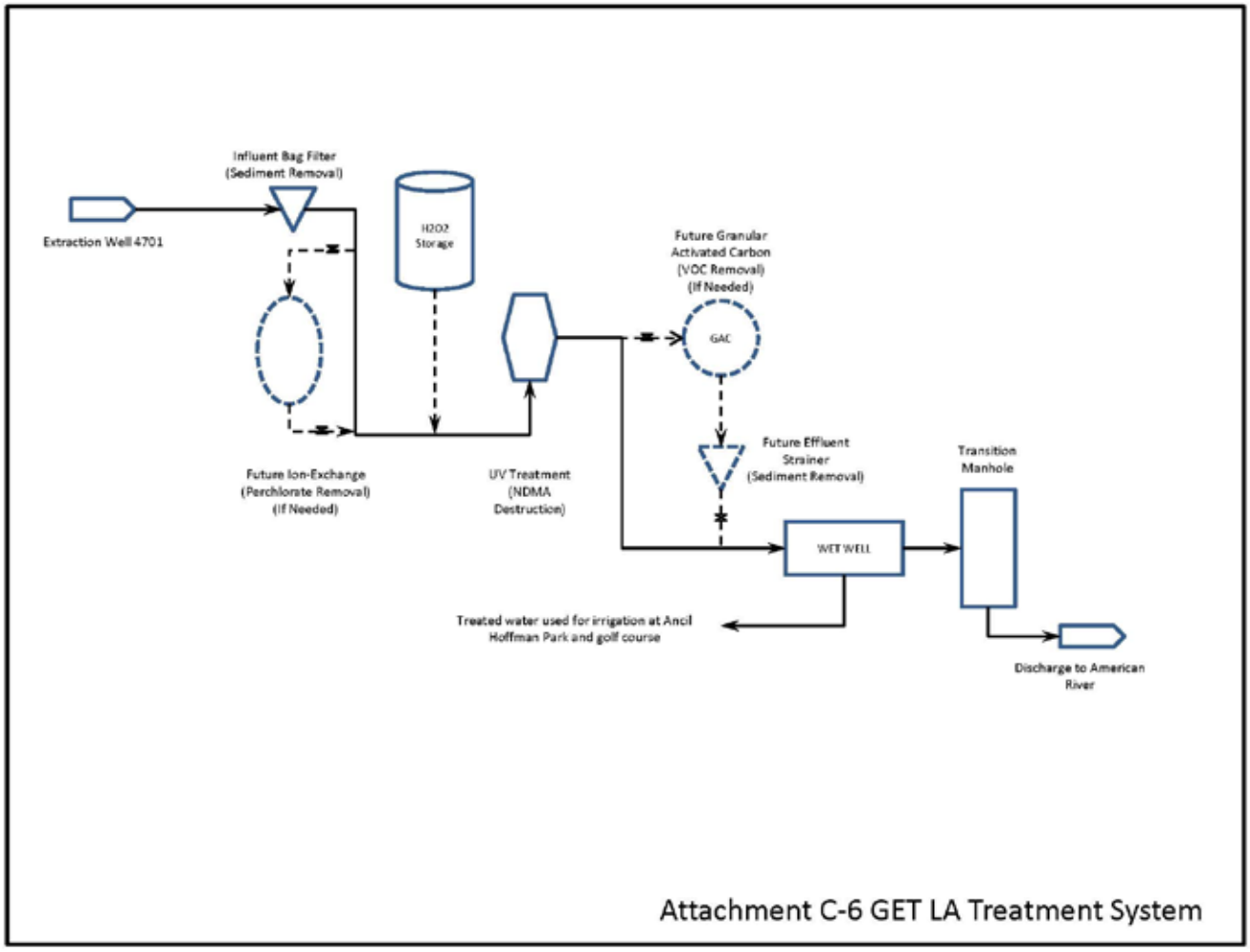

Attachment C-7

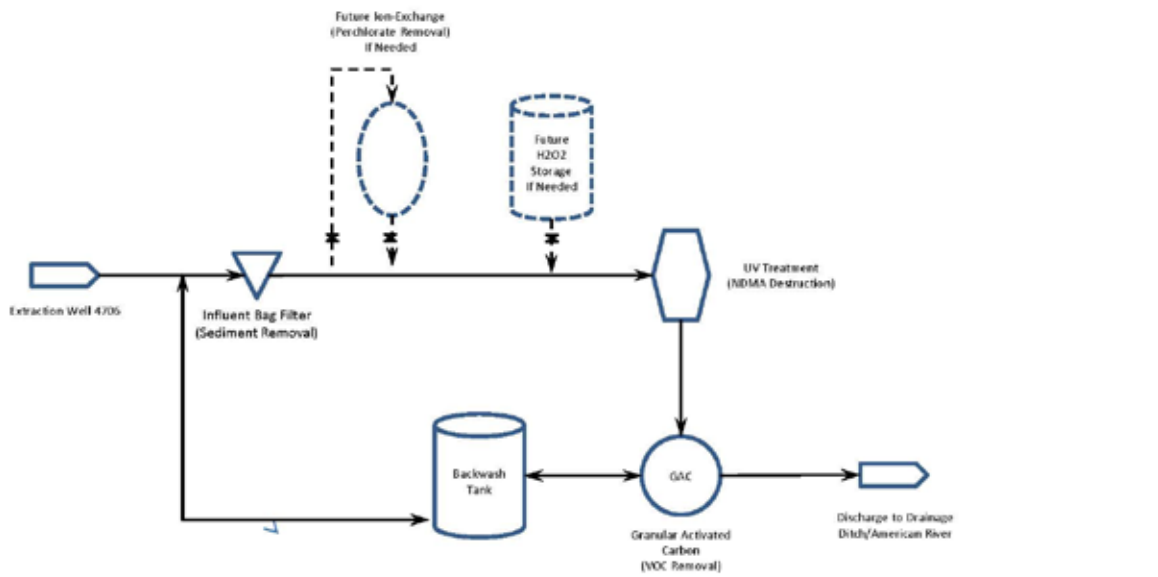

Attachment C-7 Bajamont GET LB Treatment System

Attachment C-8

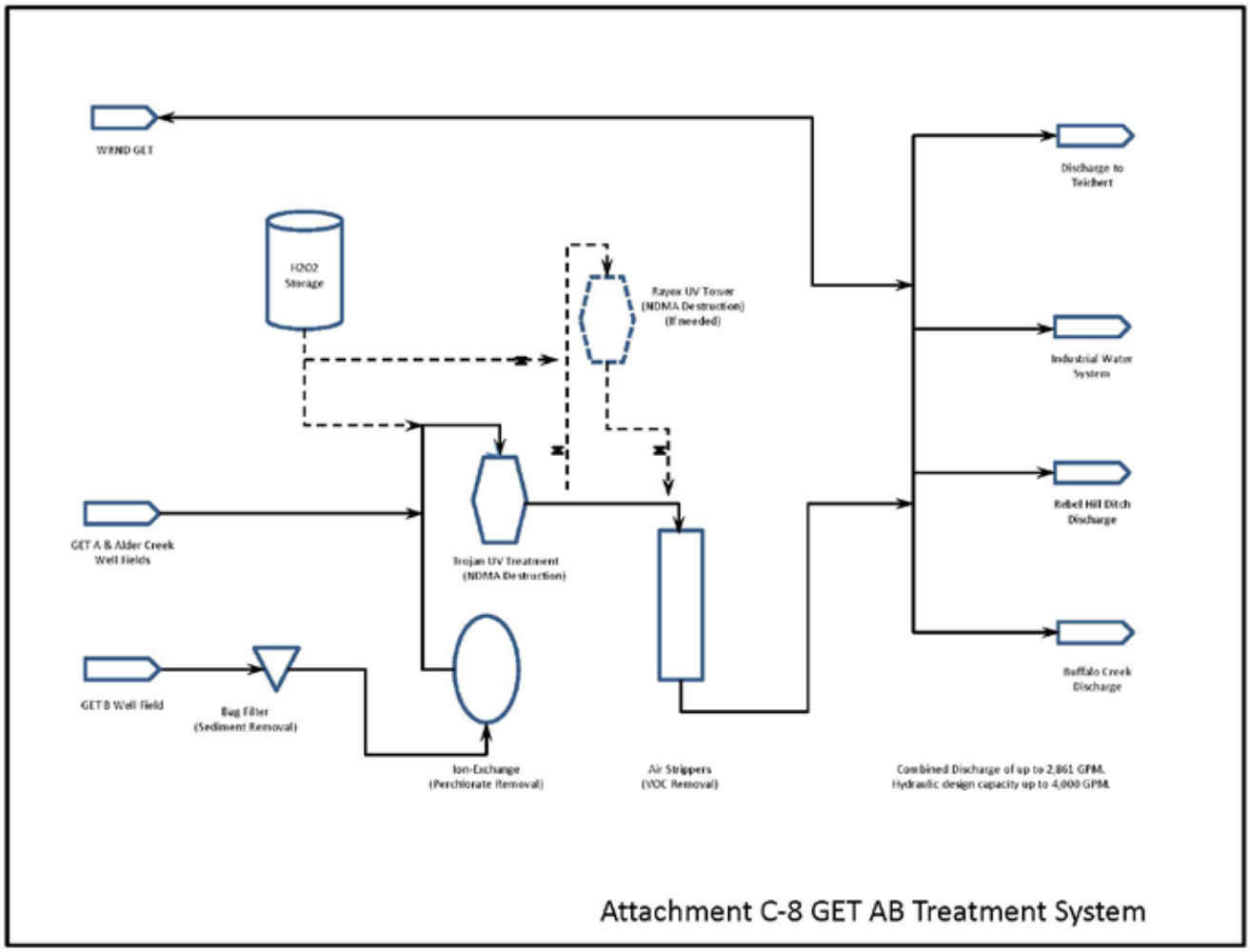

ATTACHMENT C-9 WHITE ROCK ROAD GET

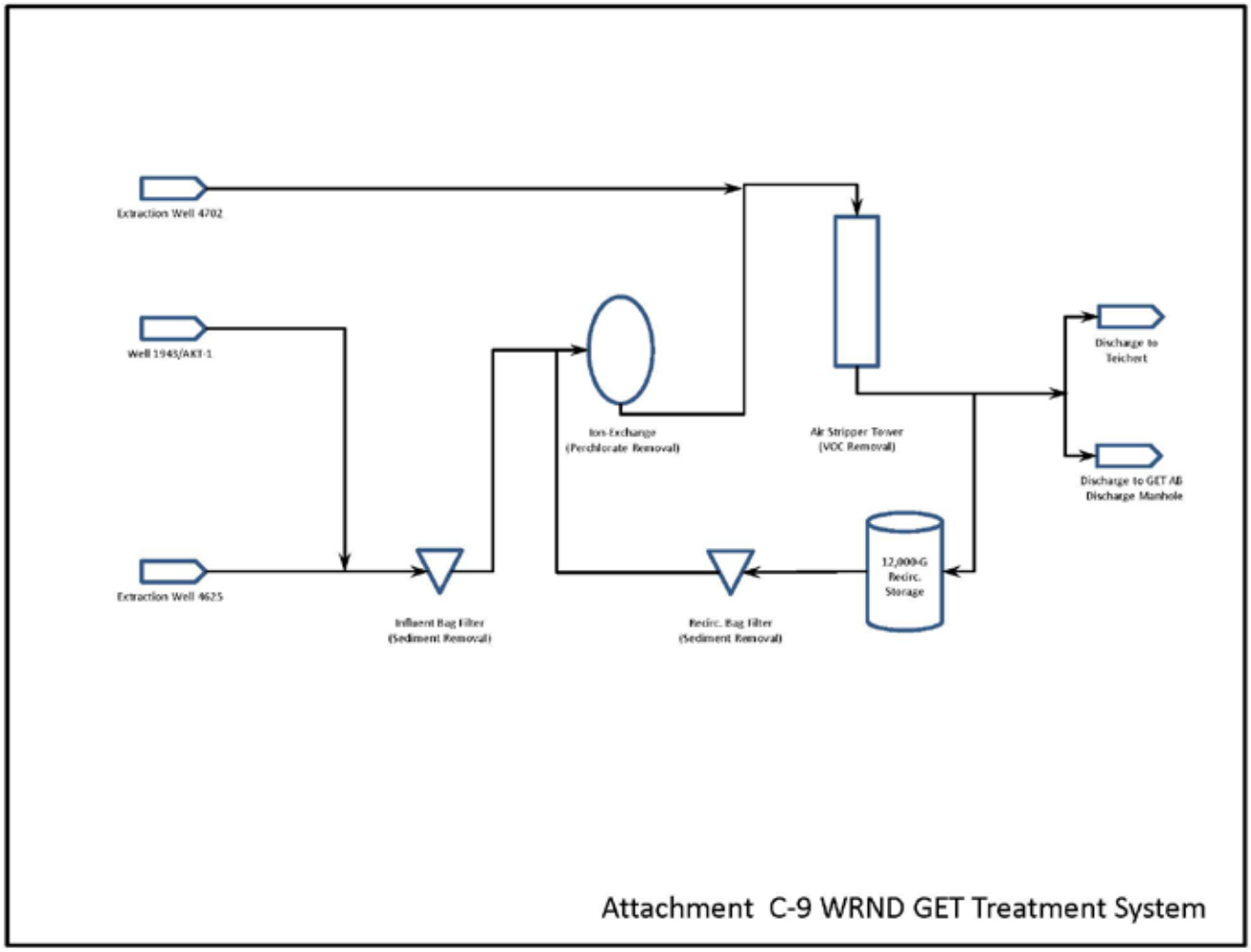

ATTACHMENT C-10

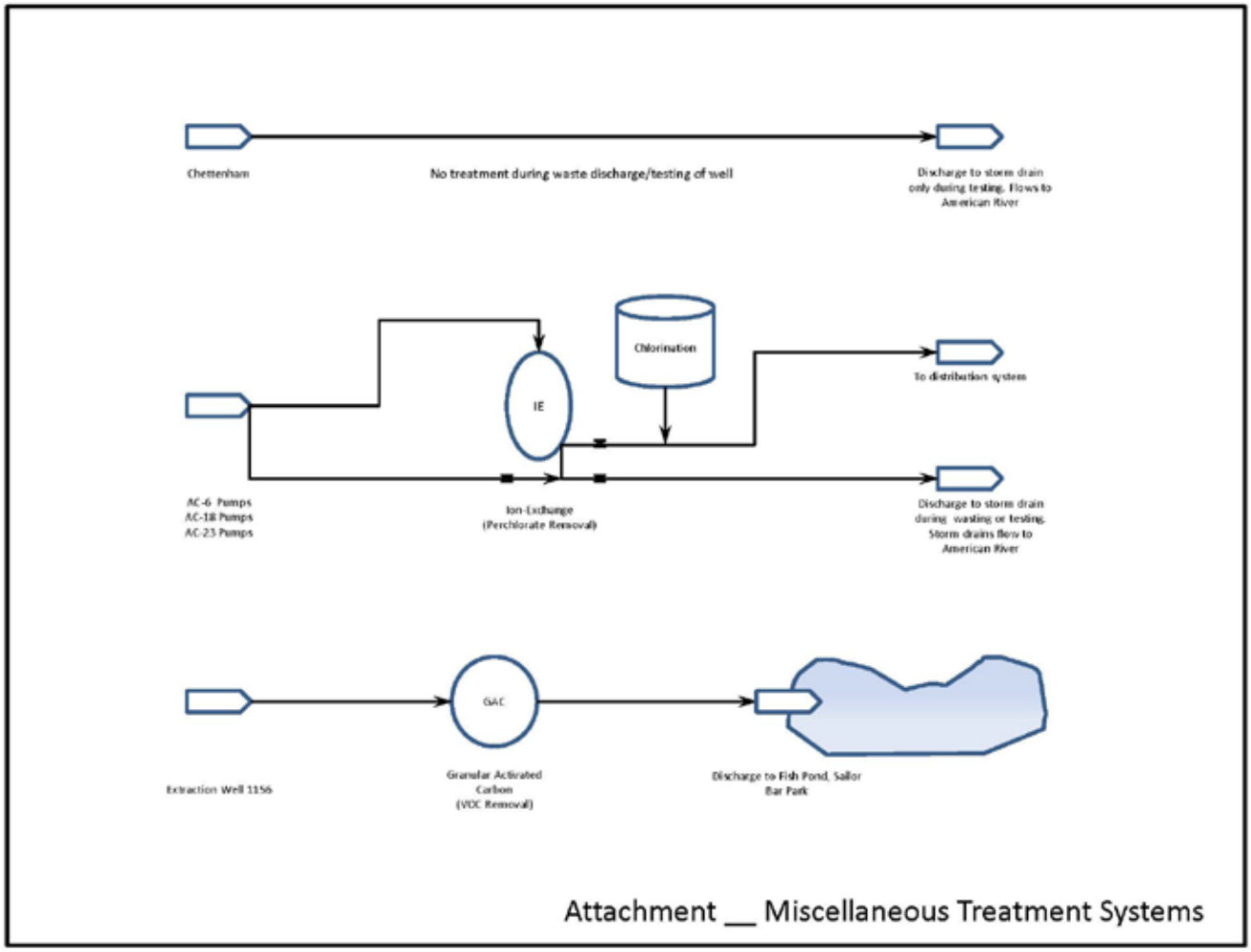

ATTACHMENT D – STANDARD PROVISIONS

I. STANDARD PROVISIONS – PERMIT COMPLIANCE

A. Duty to Comply

1. The Discharger must comply with all of the conditions of this Order. Any noncompliance constitutes a violation of the Clean Water Act (CWA) and the California Water Code and is grounds for enforcement action, for permit termination, revocation and reissuance, or modification; or denial of a permit renewal application. (40 C.F.R. § 122.41(a).)

2. The Discharger shall comply with effluent standards or prohibitions established under Section 307(a) of the CWA for toxic pollutants and with standards for sewage sludge use or disposal established under Section 405(d) of the CWA within the time provided in the regulations that establish these standards or prohibitions, even if this Order has not yet been modified to incorporate the requirement. (40 C.F.R. § 122.41(a)(1).)

B. Need to Halt or Reduce Activity Not a Defense

It shall not be a defense for a Discharger in an enforcement action that it would have been necessary to halt or reduce the permitted activity in order to maintain compliance with the conditions of this Order. (40 C.F.R. § 122.41(c).)

C. Duty to Mitigate

The Discharger shall take all reasonable steps to minimize or prevent any discharge or sludge use or disposal in violation of this Order that has a reasonable likelihood of adversely affecting human health or the environment. (40 C.F.R. § 122.41(d).)

D. Proper Operation and Maintenance

The Discharger shall at all times properly operate and maintain all facilities and systems of treatment and control (and related appurtenances) which are installed or used by the Discharger to achieve compliance with the conditions of this Order. Proper operation and maintenance also includes adequate laboratory controls and appropriate quality assurance procedures. This provision requires the operation of backup or auxiliary facilities or similar systems that are installed by a Discharger only when necessary to achieve compliance with the conditions of this Order. (40 C.F.R. § 122.41(e).)

E. Property Rights

1. This Order does not convey any property rights of any sort or any exclusive privileges. (40 C.F.R. § 122.41(g).)

2. The issuance of this Order does not authorize any injury to persons or property or invasion of other private rights, or any infringement of state or local law or regulations. (40 C.F.R. § 122.5(c).)

F. Inspection and Entry

The Discharger shall allow the Central Valley Water Board, State Water Board, U.S. EPA, and/or their authorized representatives (including an authorized contractor acting as their representative), upon the presentation of credentials and other documents, as may be required by law, to (40 C.F.R. § 122.41(i); Wat. Code, § 13383):

1. Enter upon the Discharger's premises where a regulated facility or activity is located or conducted, or where records are kept under the conditions of this Order (40 C.F.R. § 122.41(i)(1));

2. Have access to and copy, at reasonable times, any records that must be kept under the conditions of this Order (40 C.F.R. § 122.41(i)(2));

3. Inspect and photograph, at reasonable times, any facilities, equipment (including monitoring and control equipment), practices, or operations regulated or required under this Order (40 C.F.R. § 122.41(i)(3)); and

4. Sample or monitor, at reasonable times, for the purposes of assuring Order compliance or as otherwise authorized by the CWA or the Water Code, any substances or parameters at any location. (40 C.F.R. § 122.41(i)(4).)

G. Bypass

1. Definitions

   a. "Bypass" means the intentional diversion of waste streams from any portion of a treatment facility. (40 C.F.R. § 122.41(m)(1)(i).)

   b. "Severe property damage" means substantial physical damage to property, damage to the treatment facilities, which causes them to become inoperable, or substantial and permanent loss of natural resources that can reasonably be expected to occur in the absence of a bypass. Severe property damage does not mean economic loss caused by delays in production. (40 C.F.R. § 122.41(m)(1)(ii).)

2. Bypass not exceeding limitations. The Discharger may allow any bypass to occur which does not cause exceedances of effluent limitations, but only if it is for essential maintenance to assure efficient operation. These bypasses are not subject to the provisions listed in Standard Provisions – Permit Compliance I.G.3, I.G.4, and I.G.5 below. (40 C.F.R. § 122.41(m)(2).)

3. Prohibition of bypass. Bypass is prohibited, and the Central Valley Water Board may take enforcement action against a Discharger for bypass, unless (40 C.F.R. § 122.41(m)(4)(i)):

   a. Bypass was unavoidable to prevent loss of life, personal injury, or severe property damage (40 C.F.R. § 122.41(m)(4)(i)(A));

   b. There were no feasible alternatives to the bypass, such as the use of auxiliary treatment facilities, retention of untreated wastes, or maintenance during normal periods of equipment downtime. This condition is not satisfied if adequate back-up equipment should have been installed in the exercise of reasonable engineering judgment to prevent a bypass that occurred during normal periods of equipment downtime or preventive maintenance (40 C.F.R. § 122.41(m)(4)(i)(B)); and

   c. The Discharger submitted notice to the Central Valley Water Board as required under Standard Provisions – Permit Compliance I.G.5 below. (40 C.F.R. § 122.41(m)(4)(i)(C).)

4. The Central Valley Water Board may approve an anticipated bypass, after considering its adverse effects, if the Central Valley Water Board determines that it will meet the three conditions listed in Standard Provisions – Permit Compliance I.G.3 above. (40 C.F.R. § 122.41(m)(4)(ii).)

5. Notice

   a. Anticipated bypass. If the Discharger knows in advance of the need for a bypass, it shall submit a notice, if possible at least 10 days before the date of the bypass. (40 C.F.R. § 122.41(m)(3)(i).)

b. Unanticipated bypass. The Discharger shall submit notice of an unanticipated bypass as required in Standard Provisions - Reporting V.E below (24-hour notice). (40 C.F.R. § 122.41(m)(3)(ii).)

H. Upset

Upset means an exceptional incident in which there is unintentional and temporary noncompliance with technology based permit effluent limitations because of factors beyond the reasonable control of the Discharger. An upset does not include noncompliance to the extent caused by operational error, improperly designed treatment facilities, inadequate treatment facilities, lack of preventive maintenance, or careless or improper operation. (40 C.F.R. § 122.41(n)(1).)

1. Effect of an upset. An upset constitutes an affirmative defense to an action brought for noncompliance with such technology based permit effluent limitations if the requirements of Standard Provisions – Permit Compliance I.H.2 below are met. No determination made during administrative review of claims that noncompliance was caused by upset, and before an action for noncompliance, is final administrative action subject to judicial review. (40 C.F.R. § 122.41(n)(2).)
2. Conditions necessary for a demonstration of upset. A Discharger who wishes to establish the affirmative defense of upset shall demonstrate, through properly signed, contemporaneous operating logs or other relevant evidence that (40 C.F.R. § 122.41(n)(3)):
   a. An upset occurred and that the Discharger can identify the cause(s) of the upset (40 C.F.R. § 122.41(n)(3)(i));
   b. The permitted facility was, at the time, being properly operated (40 C.F.R. § 122.41(n)(3)(ii));
   c. The Discharger submitted notice of the upset as required in Standard Provisions – Reporting V.E.2.b below (24-hour notice) (40 C.F.R. § 122.41(n)(3)(iii)); and
   d. The Discharger complied with any remedial measures required under Standard Provisions – Permit Compliance I.C above. (40 C.F.R. § 122.41(n)(3)(iv).)
3. Burden of proof. In any enforcement proceeding, the Discharger seeking to establish the occurrence of an upset has the burden of proof. (40 C.F.R. § 122.41(n)(4).)

II. STANDARD PROVISIONS – PERMIT ACTION

A. General

This Order may be modified, revoked and reissued, or terminated for cause. The filing of a request by the Discharger for modification, revocation and reissuance, or termination, or a notification of planned changes or anticipated noncompliance does not stay any Order condition. (40 C.F.R. § 122.41(f).)

B. Duty to Reapply

If the Discharger wishes to continue an activity regulated by this Order after the expiration date of this Order, the Discharger must apply for and obtain a new permit. (40 C.F.R. § 122.41(b).)

C. Transfers

This Order is not transferable to any person except after notice to the Central Valley Water Board. The Central Valley Water Board may require modification or revocation and reissuance of the Order to change the name of the Discharger and incorporate such other requirements as may be necessary under the CWA and the Water Code. (40 C.F.R. § 122.41(l)(3); § 122.61.)

III. STANDARD PROVISIONS – MONITORING

A. Samples and measurements taken for the purpose of monitoring shall be representative of the monitored activity. (40 C.F.R. § 122.41(j)(1).)

B. Monitoring results must be conducted according to test procedures under 40 C.F.R. part 136 or, in the case of sludge use or disposal, approved under 40 C.F.R. part 136 unless otherwise specified in 40 C.F.R. part 503 unless other test procedures have been specified in this Order. (40 C.F.R. § 122.41(j)(4); § 122.44(i)(1)(iv).)

IV. STANDARD PROVISIONS – RECORDS

A. Except for records of monitoring information required by this Order related to the Discharger's sewage sludge use and disposal activities, which shall be retained for a period of at least five years (or longer as required by 40 C.F.R. part 503), the Discharger shall retain records of all monitoring information, including all calibration and maintenance records and all original strip chart recordings for continuous monitoring instrumentation, copies of all reports required by this Order, and records of all data used to complete the application for this Order, for a period of at least three (3) years from the date of the sample, measurement, report or application. This period may be extended by request of the Central Valley Water Board Executive Officer at any time. (40 C.F.R. § 122.41(j)(2).)

B. Records of monitoring information shall include:

1. The date, exact place, and time of sampling or measurements (40 C.F.R. § 122.41(j)(3)(i));
2. The individual(s) who performed the sampling or measurements (40 C.F.R. § 122.41(j)(3)(ii));
3. The date(s) analyses were performed (40 C.F.R. § 122.41(j)(3)(iii));
4. The individual(s) who performed the analyses (40 C.F.R. § 122.41(j)(3)(iv));
5. The analytical techniques or methods used (40 C.F.R. § 122.41(j)(3)(v)); and
6. The results of such analyses. (40 C.F.R. § 122.41(j)(3)(vi).)

C. Claims of confidentiality for the following information will be denied (40 C.F.R. § 122.7(b)):

1. The name and address of any permit applicant or Discharger (40 C.F.R. § 122.7(b)(1)); and
2. Permit applications and attachments, permits and effluent data. (40 C.F.R. § 122.7(b)(2).)

V. STANDARD PROVISIONS – REPORTING

A. Duty to Provide Information

The Discharger shall furnish to the Central Valley Water Board, State Water Board, or U.S. EPA within a reasonable time, any information which the Central Valley Water Board, State

Water Board, or U.S. EPA may request to determine whether cause exists for modifying, revoking and reissuing, or terminating this Order or to determine compliance with this Order. Upon request, the Discharger shall also furnish to the Central Valley Water Board, State Water Board, or U.S. EPA copies of records required to be kept by this Order. (40 C.F.R. § 122.41(h); Wat. Code, § 13267.)

B. Signatory and Certification Requirements

1. All applications, reports, or information submitted to the Central Valley Water Board, State Water Board, and/or U.S. EPA shall be signed and certified in accordance with Standard Provisions – Reporting V.B.2, V.B.3, V.B.4, and V.B.5 below. (40 C.F.R. § 122.41(k).)

2. All permit applications shall be signed by a responsible corporate officer. For the purpose of this section, a responsible corporate officer means: (i) A president, secretary, treasurer, or vice-president of the corporation in charge of a principal business function, or any other person who performs similar policy- or decision-making functions for the corporation, or (ii) the manager of one or more manufacturing, production, or operating facilities, provided, the manager is authorized to make management decisions which govern the operation of the regulated facility including having the explicit or implicit duty of making major capital investment recommendations, and initiating and directing other comprehensive measures to assure long term environmental compliance with environmental laws and regulations; the manager can ensure that the necessary systems are established or actions taken to gather complete and accurate information for permit application requirements; and where authority to sign documents has been assigned or delegated to the manager in accordance with corporate procedures. (40 C.F.R. § 122.22(a)(1).)

3. All reports required by this Order and other information requested by the Central Valley Water Board, State Water Board, or U.S. EPA shall be signed by a person described in Standard Provisions – Reporting V.B.2 above, or by a duly authorized representative of that person. A person is a duly authorized representative only if:

   a. The authorization is made in writing by a person described in Standard Provisions – Reporting V.B.2 above (40 C.F.R. § 122.22(b)(1));

   b. The authorization specifies either an individual or a position having responsibility for the overall operation of the regulated facility or activity such as the position of plant manager, operator of a well or a well field, superintendent, position of equivalent responsibility, or an individual or position having overall responsibility for environmental matters for the company. (A duly authorized representative may thus be either a named individual or any individual occupying a named position.) (40 C.F.R. § 122.22(b)(2)); and

   c. The written authorization is submitted to the Central Valley Water Board and State Water Board. (40 C.F.R. § 122.22(b)(3).)

4. If an authorization under Standard Provisions – Reporting V.B.3 above is no longer accurate because a different individual or position has responsibility for the overall operation of the facility, a new authorization satisfying the requirements of Standard Provisions – Reporting V.B.3 above must be submitted to the Central Valley Water Board and State Water Board prior to or together with any reports, information, or applications, to be signed by an authorized representative. (40 C.F.R. § 122.22(c).)

5. Any person signing a document under Standard Provisions – Reporting V.B.2 or V.B.3 above shall make the following certification:

   "I certify under penalty of law that this document and all attachments were prepared under my direction or supervision in accordance with a system designed to assure that qualified personnel properly gather and evaluate the information submitted. Based on my inquiry of the person or persons who manage the system or those persons directly responsible for gathering the information, the information submitted is, to the best of my knowledge and belief, true, accurate, and complete. I am aware that there are significant penalties for submitting false information, including the possibility of fine and imprisonment for knowing violations." (40 C.F.R. § 122.22(d).)

C. Monitoring Reports

1. Monitoring results shall be reported at the intervals specified in the Monitoring and Reporting Program (Attachment E) in this Order. (40 C.F.R. § 122.41(l)(4).)
2. Monitoring results must be reported on a Discharge Monitoring Report (DMR) form or forms provided or specified by the Central Valley Water Board or State Water Board for reporting results of monitoring of sludge use or disposal practices. (40 C.F.R. § 122.41(l)(4)(i).)
3. If the Discharger monitors any pollutant more frequently than required by this Order using test procedures approved under 40 C.F.R. part 136, or another method required for an industry-specific waste stream under 40 C.F.R. subchapters N or O, the results of such monitoring shall be included in the calculation and reporting of the data submitted in the DMR or sludge reporting form specified by the Central Valley Water Board. (40 C.F.R. § 122.41(l)(4)(ii).)
4. Calculations for all limitations, which require averaging of measurements, shall utilize an arithmetic mean unless otherwise specified in this Order. (40 C.F.R. § 122.41(l)(4)(iii).)

D. Compliance Schedules

Reports of compliance or noncompliance with, or any progress reports on, interim and final requirements contained in any compliance schedule of this Order, shall be submitted no later than 14 days following each schedule date. (40 C.F.R. § 122.41(l)(5).)

E. Twenty-Four Hour Reporting

1. The Discharger shall report any noncompliance that may endanger health or the environment. Any information shall be provided orally within 24 hours from the time the Discharger becomes aware of the circumstances. A written submission shall also be provided within five (5) days of the time the Discharger becomes aware of the circumstances. The written submission shall contain a description of the noncompliance and its cause; the period of noncompliance, including exact dates and times, and if the noncompliance has not been corrected, the anticipated time it is expected to continue; and steps taken or planned to reduce, eliminate, and prevent reoccurrence of the noncompliance. (40 C.F.R. § 122.41(l)(6)(i).)
2. The following shall be included as information that must be reported within 24 hours under this paragraph (40 C.F.R. § 122.41(l)(6)(ii)):
   a. Any unanticipated bypass that exceeds any effluent limitation in this Order. (40 C.F.R. § 122.41(l)(6)(ii)(A).)

b. Any upset that exceeds any effluent limitation in this Order. (40 C.F.R. § 122.41(l)(6)(ii)(B).)

3. The Central Valley Water Board may waive the above-required written report under this provision on a case-by-case basis if an oral report has been received within 24 hours. (40 C.F.R. § 122.41(l)(6)(iii).)

F. Planned Changes

The Discharger shall give notice to the Central Valley Water Board as soon as possible of any planned physical alterations or additions to the permitted facility. Notice is required under this provision only when (40 C.F.R. § 122.41(l)(1)):

1. The alteration or addition to a permitted facility may meet one of the criteria for determining whether a facility is a new source in section 122.29(b) (40 C.F.R. § 122.41(l)(1)(i)); or

2. The alteration or addition could significantly change the nature or increase the quantity of pollutants discharged. This notification applies to pollutants that are not subject to effluent limitations in this Order. (40 C.F.R. § 122.41(l)(1)(ii).)

   The alteration or addition could significantly change the nature or increase the quantity of pollutants discharged. This notification applies to pollutants that are subject neither to effluent limitations in this Order nor to notification requirements under section 122.42(a)(1) (see Additional Provisions—Notification Levels VII.A.1). (40 C.F.R. § 122.41(l)(1)(ii).)

G. Anticipated Noncompliance

The Discharger shall give advance notice to the Central Valley Water Board or State Water Board of any planned changes in the permitted facility or activity that may result in noncompliance with this Order's requirements. (40 C.F.R. § 122.41(l)(2).)

H. Other Noncompliance

The Discharger shall report all instances of noncompliance not reported under Standard Provisions – Reporting V.C, V.D, and V.E above at the time monitoring reports are submitted. The reports shall contain the information listed in Standard Provision – Reporting V.E above. (40 C.F.R. § 122.41(l)(7).)

I. Other Information

When the Discharger becomes aware that it failed to submit any relevant facts in a permit application, or submitted incorrect information in a permit application or in any report to the Central Valley Water Board**,** State Water Board, or U.S. EPA, the Discharger shall promptly submit such facts or information. (40 C.F.R. § 122.41(l)(8).)

VI. STANDARD PROVISIONS – ENFORCEMENT

A. The Central Valley Water Board is authorized to enforce the terms of this permit under several provisions of the Water Code, including, but not limited to, sections 13385, 13386, and 13387.

VII. ADDITIONAL PROVISIONS – NOTIFICATION LEVELS

A. Non-Municipal Facilities

Existing manufacturing, commercial, mining, and silvicultural Dischargers shall notify the Central Valley Water Board as soon as they know or have reason to believe (40 C.F.R. § 122.42(a)):

1. That any activity has occurred or will occur that would result in the discharge, on a routine or frequent basis, of any toxic pollutant that is not limited in this Order, if that discharge will exceed the highest of the following "notification levels" (40 C.F.R. § 122.42(a)(1)):

    a. 100 micrograms per liter (µg/L) (40 C.F.R. § 122.42(a)(1)(i));

    b. 200 µg/L for acrolein and acrylonitrile; 500 µg/L for 2,4-dinitrophenol and 2-methyl-4,6-dinitrophenol; and 1 milligram per liter (mg/L) for antimony (40 C.F.R. § 122.42(a)(1)(ii));

    c. Five (5) times the maximum concentration value reported for that pollutant in the Report of Waste Discharge (40 C.F.R. § 122.42(a)(1)(iii)); or

    d. The level established by the Central Valley Water Board in accordance with section 122.44(f). (40 C.F.R. § 122.42(a)(1)(iv).)

2. That any activity has occurred or will occur that would result in the discharge, on a non-routine or infrequent basis, of any toxic pollutant that is not limited in this Order, if that discharge will exceed the highest of the following “notification levels" (40 C.F.R. § 122.42(a)(2)):

    a. 500 micrograms per liter (µg/L) (40 C.F.R. § 122.42(a)(2)(i));

    b. 1 milligram per liter (mg/L) for antimony (40 C.F.R. § 122.42(a)(2)(ii));

    c. Ten (10) times the maximum concentration value reported for that pollutant in the Report of Waste Discharge (40 C.F.R. § 122.42(a)(2)(iii)); or

    d. The level established by the Central Valley Water Board in accordance with section 122.44(f). (40 C.F.R. § 122.42(a)(2)(iv).)

ATTACHMENT E – MONITORING AND REPORTING PROGRAM

Contents

I. General Monitoring Provisions 3
II. Monitoring Locations 4
III. Influent Monitoring Requirements 6
A. Monitoring Location MINFA,B 6
Monitoring Loctatoin MINFD, J, M, and N.....E-6
C. Monitoring Location MINFG, H, I, L, O, and P.....E-6
D. Monitoring Location MINFK E-7
IV. Effluent Monitoring Requirements 8
A. Monitoring Location M001 8
B. Monitoring Location M002 9
C. Monitoring Location M004.....E-9
D. Monitoring Location M005 and 018.....E-9
E. Monitoring Location M007.....E-10
F. Monitoring Location M008 and 9.....E-11
G. Monitoring Location M010.....E-11
H. Monitoring Location M011.....E-12
I. Monitoring Location M012.....E-12
J. Monitoring Location M013.....E-13
K. Monitoring Location M014 and 015.....E-13
L. Monitoring Location M016.....E-14
M. Monitoring Location M017.....E-14
V. Whole Effluent Toxicity Testing Requirements 16
VI. Land Discharge Monitoring Requirements 19
A. Monitoring Location LN001 19
VII. Recycling Monitoring Requirements 19
A. Monitoring Location LN002 and LN003 19
VIII. Receiving Water Monitoring Requirements 19
A. Monitoring Location R001-5, 008-11, 014-18, ... 19
B. Monitoring Location R012 and R013 20
IX. Other Monitoring Requirements 20
X. Reporting Requirements 21
A. General Monitoring and Reporting Requirements 21
B. Self-Monitoring Reports (SMR's) 21
C. Discharge Monitoring Reports (DMR's) 24
D. Other Reports 24

Tables

Table E-1. Monitoring Station Locations 4
Table E-2a. Influent Monitoring E-5
Table E-2b. Influent Monitoring.....E-6
Table E-2c. Influent Monitoring.....E-6
Table E-2d. Influent Monitoring.....E-7
Table E-3a. Effluent Monitoring.....E-7
Table E-3b. Effluent Monitoring..... E-8
Table E-3c. Effluent Monitoring.....E-9

Table E-3d. Effluent Monitoring.....E-10
Table E-3e. Effluent Monitoring.....E-10
Table E-3f Effluent Monitoring.....E-11
Table E-3g. Effluent Monitoring.....E-11
Table E-3h. Effluent Monitoring.....E-12
Table E-3i. Effluent Monitoring.....E-12
Table E-3j Effluent Monitoring.....E-13
Table E-3k Effluent Monitoring.....E-13
Table E-3l. Effluent Monitoring.....E-14
Table E-3m. Effluent Monitoring.....E-14
Table E-5a. Land Discharge Monitoring Requirements 19
Table E-6a. Recycling Monitoring Requirements E-19
Table E-7a. Receiving Water Monitoring Requirements..... 19
Table E-7b. Receiving Water Monitoring Requirements..... 20
Table E-8. Monitoring Periods and Reporting Schedule 22

ATTACHMENT E – MONITORING AND REPORTING PROGRAM (MRP)

The Code of Federal Regulations (40 C.F.R. § 122.48) requires that all NPDES permits specify monitoring and reporting requirements. Water Code sections 13267 and 13383 also authorize the Central Valley Water Board to require technical and monitoring reports. This MRP establishes monitoring and reporting requirements that implement federal and California regulations.

I. GENERAL MONITORING PROVISIONS

A. Samples and measurements taken as required herein shall be representative of the volume and nature of the monitored discharge. All samples shall be taken at the monitoring locations specified below and, unless otherwise specified, before the monitored flow joins or is diluted by any other waste stream, body of water, or substance. Monitoring locations shall not be changed without notification to and the approval of the Central Valley Water Board.

B. Effluent samples shall be taken downstream of the last addition of wastes to the treatment or discharge works where a representative sample may be obtained prior to mixing with the receiving waters. Samples shall be collected at such a point and in such a manner to ensure a representative sample of the discharge.

C. Chemical, bacteriological, and bioassay analyses of any material required by this Order shall be conducted by a laboratory certified for such analyses by the Department of Public Health (DPH). Laboratories that perform sample analyses must be identified in all monitoring reports submitted to the Central Valley Water Board. In the event a certified laboratory is not available to the Discharger for any onsite field measurements such as pH, DO, turbidity, temperature, and residual chlorine, such analyses performed by a noncertified laboratory will be accepted provided a Quality Assurance-Quality Control Program is instituted by the laboratory. A manual containing the steps followed in this program for any onsite field measurements such as pH, DO, turbidity, temperature, and residual chlorine must be kept onsite in the treatment facility laboratory and shall be available for inspection by Central Valley Water Board staff. The Discharger must demonstrate sufficient capability (qualified and trained employees, properly calibrated and maintained field instruments, etc.) to adequately perform these field measurements. The Quality Assurance-Quality Control Program must conform to USEPA guidelines or to procedures approved by the Central Valley Water Board.

D. Appropriate flow measurement devices and methods consistent with accepted scientific practices shall be selected and used to ensure the accuracy and reliability of measurements of the volume of monitored discharges. All monitoring instruments and devices used by the Discharger to fulfill the prescribed monitoring program shall be properly maintained and calibrated as necessary, at least yearly, to ensure their continued accuracy. All flow measurement devices shall be calibrated at least once per year to ensure continued accuracy of the devices.

E. Monitoring results, including noncompliance, shall be reported at intervals and in a manner specified in this Monitoring and Reporting Program.

F. Laboratories analyzing monitoring samples shall be certified by the Department of Public Health (DPH), in accordance with the provision of Water Code section 13176, and must include quality assurance/quality control data with their reports.

G. The Discharger shall conduct analysis on any sample provided by USEPA as part of the Discharge Monitoring Quality Assurance (DMQA) program. The results of any such analysis shall be submitted to USEPA's DMQA manager.

H. The Discharger shall file with the Central Valley Water Board technical reports on self-monitoring performed according to the detailed specifications contained in this Monitoring and Reporting Program.

I. The results of all monitoring required by this Order shall be reported to the Central Valley Water Board, and shall be submitted in such a format as to allow direct comparison with the limitations and requirements of this Order. Unless otherwise specified, discharge flows shall be reported in terms of the monthly average and the daily maximum discharge flows.

J. The Discharger shall report all peaks when using methods analyzing for volatile and semi-volatile constituents.

II. MONITOR LOCATIONS

The Discharger shall establish the following monitoring locations to demonstrate compliance with the effluent limitations, discharge specifications, and other requirements in this Order:

Table E-1. Monitor Station Locations

Discharge Point Name	Monitoring Location Name	Monitoring Location Description (include Latitude and Longitude when available)
001	M-001	Effluent from ARGET.
002	M-002	Effluent from GET E/F.
003	M-003	No Longer Used
004	M-004	Effluent from GET HA
005	M-005	Effluent from GET J.
006	M-006	No Longer Used
007	M-007	Effluent from GET KA
008	M-008	Effluent from GET LA.
009	M-009	Effluent from GET LB
010	M-010	Effluent from Sailor Bar Park Well System.
011	M-011	No Longer Used.
012	M-012	Effluent from Low-threat System.
013	M-013	Effluent from AC-6 Well System
014	M-014	Effluent from AC-18 Well System
015	M-015	Effluent from AC-23 Well System
016	M-016	Effluent from GET AB
017	M-017	Effluent from White Rock GET
018	M-018	Effluent from Well 4665
	MINFA	Influent to ARGET
	MINFB	Influent to GET E/F
	MINFC	No Longer Used
	MINFD	Influent to GET HA
	MINFE	Influent to GET J

Discharge Point Name	Monitoring Location Name	Monitoring Location Description (include Latitude and Longitude when available)
	MINFF	No Longer Used
	MINFG	Influent to GET KA
	MINFH	Influent to GET LA
	MINFI	Influent to GET LB
	MINFJ	Influent to Sailor Bar Park Well System
	MINFK	No Longer Used
	MINFL	Influent to AC-6 Well System
	MINFM	Influent to AC-18 Well System
	MINFN	Influent to AC-23 Well System
	MINFO	Influent to GET AB
	MINFP	Influent to White Rock GET
	R-001	R-001 (upstream) on American River from discharge of Buffalo Creek into American River at Latitude 38º, 38', 00" N, Longitude 121º, 16', 07" W. Outfall 001 is representative of ARGET, GET E/F,GET J and GET AB discharges (Discharges 001, 002, 005 and 016, respectively.
	R-002	R-002 (downstream) on American River from discharge of Buffalo Creek into American River at Latitude 38º, 38', 00" N, Longitude 121º, 16', 07" W.
	R-003	R-003 (upstream) on American River from discharge water from GET LB (Discharge 009) into American River at Latitude 38º, 37', 31" N, Longitude 121º, 18', 13" W.
	R-004	R-004 (downstream) on American River from discharge water from GET LB (Discharge 009) into American River at Latitude 38º, 37', 31" N, Longitude 121º, 18', 13" W.
	R-005	R-005 (downstream on American River from discharge water from GET LA (Discharge 008) into American River at Latitude 38º, 36', 29" N, Longitude 121º, 18', 33" W. R-004 is the upstream sample location for this Discharge 008
	R-006	R-006 (upstream) on American River from discharge water from long term GET KA (Discharge 007) and AC-6 (Discharge 013) into American River at Latitude 38º, 36', 07" N, Longitude 121º, 19', 02" W
	R-007	R-007 (downstream) on American River from discharge water from long term GET KA (Discharge 007) and AC-6 (Discharge 013) into American River at Latitude 38º, 36', 07" N, Longitude 121º, 19', 02" W
	R-008 and R-009	No longer used.
	R-010	R-010 (upstream) on American River from discharge from AC-23 (Discharge 015) into American River via the Boyd Station Channel at Latitude 38º, 34', 46" N, Longitude 121º, 19', 32" W. May receive water from long term GET HA (Discharge 004) in the future.

Discharge Point Name	Monitoring Location Name	Monitoring Location Description (include Latitude and Longitude when available)
	R-011	R-011 (downstream) on American River from discharge from AC-23 (Discharge 015) into American River via the Boyd Station Channel at Latitude 38º, 34', 46" N, Longitude 121º, 19', 32" W. May receive water from long term GET HA (Discharge 004) in the future.
	R-012	R-012 (upstream) on Morrison Creek from discharge of drainage ditch to Morrison Creek at Latitude 38º, 31', 53" N, Longitude 121º, 19', 36" W. Outfall 006 represents discharge from GET HA (Discharge 004) and AC-18 (Discharge 014).
	R-013	R-013 (downstream) on Morrison Creek from discharge of drainage ditch to Morrison Creek at Latitude 38º, 31', 53" N, Longitude 121º, 19', 36" W. Outfall 006 represents discharge from GET HA (Discharge 004) and AC-18 (Discharge 014).
	R-014	R-014 (upstream) on American River from a potential discharge from various GETs into American River via pipeline at 38º, 38', 06" N, Longitude 121º, 13', 13" W.
	R-015	R-015 (downstream) on American River from a potential discharge from various GETs into American River via pipeline at 38º, 38', 06" N, Longitude 121º, 13', 13" W
	R-016	R-016 (upstream) on Alder Creek from a potential discharge water from various GETs via pipeline into Alder Creek at American River at Latitude 38º, 38', 12" N, Longitude 121º, 12', 11" W.
	R-017	R-017 (downstream) on Alder Creek from a potential discharge water from various GETs via pipeline into Alder Creek at American River at Latitude 38º, 38', 12" N, Longitude 121º, 12', 11" W.
	LND-001	Discharge from GET AB and/or White Rock GET to Rebel Hill Ditch at t 38º, 36', 59.6" N, Longitude 121º, 10', 16" W.
	LND-002	Discharge from GET AB and/or White Rock GET to the Aerojet industrial water supply system
	LND-003	Discharge from GET AB and/or White Rock GET to Teichert
	BIO-001	Biosolids generated at the GET E/F facility

The North latitude and West longitude information in Table E-1 are approximate for administrative purposes.

III. INFLUENT MONITORING REQUIREMENTS

A. Monitoring Locations MINFA, MINFB and MINFO

1. The Discharger shall monitor the influent to ARGET,GET E/F and GET AB at MINFA, MINFB and MINFO, respectively, as follows:

Table E-2a

Parameter	Units	Sample Type	Minimum Sampling Frequency	Required Analytical Test Method
VOCs	µg/L	Grab	Monthly	[1]

Parameter	Units	Sample Type	Minimum Sampling Frequency	Required Analytical Test Method
N-nitrosodimethylamine	µg/L	Grab	Monthly	[2]
Perchlorate	µg/L	Grab	Monthly	[3]
Semi-Volatile Organics	µg/L	Grab	Quarterly	[4]
1,4-Dioxane[7]	µg/L	Grab	Monthly	[5]
PROWL [7]	µg/L	Grab	2xYear	[6]
Flow	MGD	Meter	Continuous	[8]
pH	Standard Units	Grab	Monthly	[8]

1. Test Method to be EPA Methods 601and 602 or 8010 and 8020 or 8260, or 500 Series, or an equivalent method approved by the Regional Board with a practical quantitation level no greater than 0.5 µg/L. Constituents to be reported are those on the EPA
2. Method 8260B Short List. All concentrations between the detection level and practical quantitation level shall be reported as trace.A test method with a than 0.002 µg/L. All concentrations between the detection limit and practical quantitation level shall be reported as trace.
3. Test Method to be EPA Methods 314.0 or 314.1, or an equivalent method approved by the Regional Board. with a practical quantitation level no greater than 4.0 µg/L. All concentrations between the detection level and practical quantization level shall be reported as trace.
4. Test Method to be EPA Methods 8270 or 500 Series Method, or an equivalent method approved by the Regional Board with a Practical Quantitation Level no greater than 5 µg/L. All concentrations between the detection limit and practical quantitation level shall be reported as trace.
5. A test method with a practical quantitation level no greater than 3 µg/L. All concentrations between the detection limit and practical quantitation level shall be reported as trace.
6. PROWL analysis with a practical quantitation level no greater than 10 µg/L. All concentrations between the detection level and practical quantitation level shall be reported as trace.
7. MINFB ONLY FOR PROWL ANALYSIS AND MINFA AND MINFB ONLY FOR 1,4-DIOXANE ANALYSIS.
8. Analytical methods described in 40 CFR Part 136 or by a method approved by Central Valley Water Board

B. Monitoring Locations MINFD, MINFJ, MINFM and MINFN

1. The Discharger shall monitor the influent to GET HA, Sailor Bar Park Well system, AC-18 well system and AC-23 well system at MINFD, MINFJ, MINFM and MINFN, respectively, as follows:

Table E-2b

Parameter	Units	Sample Type	Minimum Sampling Frequency	Required Analytical Test Method
VOCs	µg/L	Grab	Monthly	[1]
Perchlorate	µg/L	Grab	Monthly	[2]
Semi-Volatile Organics[3]	µg/L	Grab	Quarterly	[3]

1. Test Method to be EPA Methods 601and 602 or 8010 and 8020 or 8260, or 500 Series, or an equivalent method approved by the Regional Board with a practical quantitation level no greater than 0.5 µg/L. Constituents to be reported are those on the EPA Method 8260B Method Short List. All concentrations between the detection level and practical quantitation level shall be reported as trace.
2. Test Method to be EPA Methods 314.0 or 314.1, or an equivalent method approved by the Regional Board. with a practical quantitation level no greater than 4.0 µg/L. All concentrations between the detection level and practical quantization level shall be reported as trace.
3. Test Method to be EPA Methods 8270 or 500 Series Method, or an equivalent method approved by the Regional Board with a Practical Quantitation Level no greater than 5 µg/L. All concentrations between the detection limit and practical quantitation level shall be reported as trace. FOR MINFJ ONLY.

C. Monitoring Locations MINFE, MINFG, MINFH, MINFI, MINFL and MINFP

1. The Discharger shall monitor the influent to GET J, GET KA, GET LA, GET LB, AC-6 well system, and White Rock GET at MINFE, MINFG, MINFH, MINFI, MINFL and MINFP, respectively, as follows:

Table E-2c

Parameter	Units	Sample Type	Minimum Sampling Frequency	Required Analytical Test Method

Parameter	Units	Sample Type	Minimum Sampling Frequency	Required Analytical Test Method
VOCs	µg/L	Grab	Monthly	[1]
N-nitrosodimethylamine	µg/L	Grab	Monthly	[2]
Perchlorate	µg/L	Grab	Monthly	[3]

1. Test Method to be EPA Methods 601and 602 or 8010 and 8020 or 8260, or 500 Series, or an equivalent method approved by the Regional Board with a practical quantitation level no greater than 0.5 µg/L. Constituents to be reported are those on the EPA Method 8260 Short List. All concentrations between the detection level and practical quantitation level shall be reported as trace.
2. A test method with a practical quantitation level no greater than 0.002 µg/L. All concentrations between the detection limit and practical quantitation level shall be reported as trace.
3. Test Method to be EPA Methods 314.0 or 314.1, or an equivalent method approved by the Regional Board with a practical quantitation level no greater than 4.0 µg/L. All concentrations between the detection level and practical quantization level shall be reported as trace.

IV. EFFLUENT MONITORING REQUIREMENTS

A. Monitor Location M001

1. The Discharger shall monitor the ARGET effluent at M001 as follows.

Table E-3a

Parameter	Units	Sample Type	Minimum Sampling Frequency	Required Analytical Test Method[8]
Volatile Organics	µg/L	Grab	Monthly	[1]
N-nitrosodimethylamine	µg/L	Grab	Monthly	[2]
Perchlorate	µg/L	Grab	Monthly	[3]
Semi-Volatile Organics	µg/L	Grab	Quarterly	[4]
1,4-Dioxane	µg/L	Grab	Monthly	[5]
Flow[6]	mgd	Measure	Continuous	--
Temperature[6]	^{o}F(^{o}C)	Grab	Monthly	--
Dissolved Oxygen[6]	mg/L	Grab	Monthly	--
Turbidity[6]	NTU	Grab	Monthly	--
Electrical Conductivity[6]	µmhos/cm	Grab	Monthly	--
pH[6]	Standard	Grab	Monthly	--
Hardness as $CaCO_3$	mg/L	Grab	Annually	--
Total Dissolved Solids	mg/L	Grab	Quarterly	--
Acute Toxicity	% Survival	Grab	Quarterly	[7]
Whole Effluent Toxicity (see Section V. below)				
Priority Pollutants	µg/L	Grab	[9]	[10]

1. Test Method to be EPA Methods 601and 602 or 8010 and 8020 or 8260, or 500 Series, or an equivalent method approved by the Regional Board with a Practical Quantitation Level no greater than 0.5 µg/L. Constituents to be reported are those on the EPA Method 8260B Short List All concentrations between the detection level and practical quantitation level shall be reported as trace.
2. A test method with a practical quantitation level no greater than 0.002 µg/L. All concentrations between the detection limit and practical quantitation level shall be reported as trace.
3. Test Method to be EPA Methods 314.0 or 314.1, or an equivalent method approved by the Regional Board with a Practical Quantitation Level no greater than 4.0 µg/L. All concentrations between the detection limit and practical quantitation level shall be reported as trace.
4. Test Method to be EPA Methods 8270 or 500 Series Method, or an equivalent method approved by the Regional Board with a Practical Quantitation Level no greater than 5 µg/L. All concentrations between the detection limit and Practical quantitation level shall be reported as trace.
5. A test method with a practical quantitation level no greater than 3 µg/L. All concentrations between the detection limit and practical quantitation level shall be reported as trace.

6. Field Measurements.
7. Acute toxicity testing shall be performed as described in Whole Effluent Toxicity Testing Requirements V.A., below.
8. If method not listed, parameters shall be analyzed using the analytical methods described in 40 CFR sections 136.
9. Priority pollutants shall be sampled quarterly during the third year following the date of permit adoption and shall be conducted concurrently with upstream receiving water monitoring for hardness (as $CaCO_3$) and pH
10. For priority pollutant constituents the reporting level shall be consistent with Sections 2.4.2 and 2.4.3 of the Policy for Implementation of Toxics Standards for Inland Surface Waters, Enclosed Bays, and Estuaries of California (See Attachment I, Table I-1).

B. Monitor Location M002

1. The Discharger shall monitor the GET E/F effluent at M002 as follows:

Table E-3b

Parameter	Units	Sample Type	Minimum Sampling Frequency	Required Analytical Test Method[12]
Volatile Organics	µg/L	Grab	Monthly	[1]
N-nitrosodimethylamine	µg/L	Grab	Monthly	[2]
Perchlorate	µg/L	Grab	Monthly	[3]
Semi-Volatile Organics	µg/L	Grab	Quarterly	[4]
1,4-Dioxane	µg/L	Grab	Monthly	[5]
Flow[6]	mgd	Measure	Continuous	--
Temperature[6]	$^{o}F(^{o}C)$	Grab	Monthly	--
Dissolved Oxygen	mg/L	Grab	Monthly	--
Turbidity	NTU	Grab	Monthly	--
Electrical Conductivity[6]	µmhos/cm	Grab	Monthly	--
pH[6]	Standard	Grab	Monthly	--
Hardness as $CaCO_3$	mg/L	Grab	Annually	--
Total Dissolved Solids	mg/L	Grab	Quarterly	--
PROWL	µg/L	Grab	2xYear	[7]
Formaldehyde	µg/L	Grab	Monthly	[8]
Glyoxal	µg/L	Grab	Monthly	[9]
Acetaldehyde	µg/L	Grab	Monthly	[10]
Acrylamide	µg/L	Grab	Monthly	[15]
Acute Toxicity	% Survival	Grab	Quarterly	[11]
Whole Effluent Toxicity (see Section V. below)				
Priority Pollutants	µg/L	Grab	[13]	[14]

1. Test Method to be EPA Methods 601and 602 or 8010 and 8020 or 8260, or 500 Series, or an equivalent method approved by the Regional Board with a Practical Quantitation Level no greater than 0.5 µg/L. Constituents to be reported are those on the EPA
2. Method 8260B Short List. All concentrations between the detection level and practical quantitation limit shall be reported as trace.A test method with greater than 0.002 µg/L. All concentrations between the detection limit and practical quantitation level shall be reported as trace.
3. Test Method to be EPA Methods 314.0 or 314.1, or an equivalent method approved by the Regional Board with a Practical Quantitation Level no greater than 4.0 µg/L. All concentrations between the detection limit and practical quantitation level shall be reported as trace.
4. Test Method to be EPA Methods 8270 or 500 Series Method, or an equivalent method approved by the Regional Board with a practical quantitation level no greater than 5 µg/L. All concentrations between the detection limit and practical quantitation level shall be reported as trace.
5. A test method with a practical quantitation level no greater than 3 µg/L. All concentrations between the detection limit and practical quantitation level shall be reported as trace.
6. Field Measurements.
7. PROWL analysis with a practical quantitation level no greater than 10 µg/L. All concentrations between the detection level and practical quantitation level shall be reported as trace.
8. Formaldehyde analysis with a practical quantitation level no greater than 5 µg/L. All concentrations between the detection level and practical quantitation level shall be reported as trace.
9. Glyoxal analysis with a practical quantitation level no greater than 5 µg/L. All concentrations between the detection level and

practical quantitation level shall be reported as trace.

10. Acetaldehyde analysis with a practical quantitation level no greater than 5 µg/L. All concentrations between the detection level and practical quantitation level shall be reported as trace.
11. Acute toxicity testing shall be performed as described in Whole Effluent Toxicity Testing Requirements V.A., below.
12. If method not listed, parameters shall be analyzed using the analytical methods described in 40 CFR sections 136.
13. Priority pollutants shall be sampled quarterly during the third year following the date of permit adoption and shall be conducted concurrently with upstream receiving water monitoring for hardness (as $CaCO_3$) and pH
14. For priority pollutant constituents the reporting level shall be consistent with Sections 2.4.2 and 2.4.3 of the Policy for Implementation of Toxics Standards for Inland Surface Waters, Enclosed Bays, and Estuaries of California (See Attachment I, Table I-1).
15. Acrylamide analysis by EPA Method 8316M with a PQL no less than 0.1 µg/L.

C. Monitor Location 004

1. The Discharger shall monitor the effluent from GET HA at M004 follows:

Table E-3c

Parameter	Units	Sample Type	Minimum Sampling Frequency	Required Analytical Test Method[5]
Volatile Organics	µg/L	Grab	Monthly	[1]
Perchlorate	µg/L	Grab	Monthly	[2]
Flow[3]	mgd	Measure	Continuous	--
Temperature[3]	$^{o}F(^{o}C)$	Grab	Monthly	--
Dissolved Oxygen[3]	mg/L	Grab	Monthly	--
Turbidity[3]	NTU	Grab	Monthly	--
Electrical Conductivity[3]	µmhos/cm	Grab	Monthly	--
pH[3]	Standard	Grab	Monthly	--
Hardness as $CaCO_3$	mg/L	Grab	Annually	--
Acute Toxicity	% Survival	Grab	Quarterly	[4]

1. Test Method to be EPA Methods 601and 602 or 8010 and 8020 or 8260, or 500 Series, or an equivalent method approved by the Regional Board with a Practical Quantitation Level no greater than 0.5 µg/L.
   Constituents to be reported are those on the EPA Method 8260B Short List. All concentrations between the detection level and practical quantitation limit shall be reported as trace.
2. Test Method to be EPA Methods 314.0 or 314.1, or an equivalent method approved by the Regional Board, with a Practical Quantitation Level no greater than 4.0 µg/L. All concentrations between the detection limit and practical quantitation level shall be reported as trace.
3. Field Measurements.
4. Acute toxicity testing shall be performed as described in Whole Effluent Toxicity Testing Requirements V.A., below.
5. If method not listed, parameters shall be analyzed using the analytical methods described in 40 CFR sections 136.

D. Monitor Location 005 and 018

1. The Discharger shall monitor the effluent from GET J at M005 and Extraction Well 4665 at M018 as follows:

Table E-3d

Parameter	Units	Sample Type	Minimum Sampling Frequency	Required Analytical Test Method[6]
Volatile Organics	µg/L	Grab	Monthly	[1]
N-nitrosodimethylamine	µg/L	Grab	Monthly	[2]
Perchlorate	µg/L	Grab	Monthly	[3]
Flow[4]	mgd	Measure	Continuous	--
Temperature[4]	$^{o}F(^{o}C)$	Grab	Monthly	--
Dissolved Oxygen[4]	mg/L	Grab	Monthly	--
Turbidity[4]	NTU	Grab	Monthly	--
Electrical Conductivity[4]	µmhos/cm	Grab	Monthly	--
pH[4]	Standard	Grab	Monthly	--

Parameter	Units	Sample Type	Minimum Sampling Frequency	Required Analytical Test Method[6]
Hardness as $CaCO_3$	mg/L	Grab	Annually	--
Acute Toxicity[5]	% Survival	Grab	Quarterly	[5]

1. Test Method to be EPA Methods 601and 602 or 8010 and 8020 or 8260, or 500 Series, or an equivalent method approved by the Regional Board with a Practical Quantitation Level no greater than 0.5 µg/L.
Constituents to be reported are those on the EPA
2. Method 8260B Short List. All concentrations between the detection level and practical quantitation limit shall be reported as trace.A test method with greater than 0.002 µg/L. All concentrations between the detection limit
and practical quantitation level shall be reported as trace.
3. Test Method to be EPA Methods 314.0 or 314.1, or an equivalent method approved by the Regional Board. with a Practical Quantitation Level no greater than 4.0 µg/L. All concentrations between the detection limit and practical quantitation level shall be reported as trace.
4. Field Measurements.
5. Acute toxicity testing shall performed as described in Whole Effluent Toxicity Testing Requirements V.A., below.
6. If method not listed, parameters shall be analyzed using the analytical methods described in 40 CFR sections 136.

E. Monitor Location 007

1. The Discharger shall monitor the effluent from GET KA at M007 as follows:

Table E-3e

Parameter	Units	Sample Type	Minimum Sampling Frequency	Required Analytical Test Method[6]
Volatile Organics	µg/L	Grab	Monthly	[1]
N-nitrosodimethylamine	µg/L	Grab	Monthly	[2]
Perchlorate	µg/L	Grab	Monthly	[3]
Flow[4]	mgd	Measure	Continuous	--
Temperature[4]	$^{o}F(^{o}C)$	Grab	Monthly	--
Dissolved Oxygen[4]	mg/L	Grab	Monthly	--
Turbidity[4]	NTU	Grab	Monthly	--
Electrical Conductivity[4]	µmhos/cm	Grab	Monthly	--
pH[4]	Standard	Grab	Monthly	--
Hardness as $CaCO_3$	mg/L	Grab	Annually	--
Total Dissolved Solids	mg/L	Grab	Quarterly	--
Acute Toxicity	% Survival	Grab	Quarterly	[5]

1. Test Method to be EPA Methods 601and 602 or 8010 and 8020 or 8260, or 500 Series, or an equivalent method approved by the Regional Board. with a Practical Quantitation Level no greater than 0.5 µg/L.
Constituents to be reported are those on the EPA
Method 8260B Short List. All concentrations between the detection level and practical quantitation limit shall be reported as trace.
2. A test method with a practical quantitation level no greater than 0.002 µg/L. All concentrations between the detection limit
and practical quantitation level shall be reported as trace.
3. Test Method to be EPA Methods 314.0 or 314.1, or an equivalent method approved by the Regional Board with a Practical Quantitation Level no greater than 4.0 µg/L. All concentrations between the detection limit and practical quantitation level shall be reported as trace.
4. Field Measurements.
5. Acute toxicity testing shall performed as described in Whole Effluent Toxicity Testing Requirements V.A., below.
6. If method not listed, parameters shall be analyzed using the analytical methods described in 40 CFR sections 136.

F. Monitor Locations M008 and M009

1. The Discharger shall monitor the effluent of GET L-A and GET L-B at M008 and M009, respectively, as follows:

Table E-3f

Parameter	Units	Sample Type	Minimum Sampling Frequency	Required Analytical Test Method[6]
Volatile Organics	µg/L	Grab	Monthly [1]	[1]

Parameter	Units	Sample Type	Minimum Sampling Frequency	Required Analytical Test Method[6]
N-nitrosodimethylamine	µg/L	Grab	Monthly	[2]
Perchlorate	µg/L	Grab	Monthly[3]	[3]
Flow[4]	mgd	Measure	Continuous	--
Temperature[4]	^{o}F(^{o}C)	Grab	Monthly	--
Dissolved Oxygen[4]	mg/L	Grab	Monthly	--
Turbidity[4]	NTU	Grab	Monthly	--
Electrical Conductivity[4]	µmhos/cm	Grab	Monthly	--
pH[4]	Standard	Grab	Monthly	--
Hardness as $CaCO_3$	mg/L	Grab	Annually	--
Acute Toxicity	% Survival	Grab	Quarterly	[5]

1. Test Method to be EPA Methods 601and 602 or 8010 and 8020 or 8260, or 500 Series, or an equivalent method approved by the Regional Board. with a Practical Quantitation Level no greater than 0.5 µg/L.
   Constituents to be reported are those on the EPA Method 8260B Short List. All concentrations between the detection level and practical quantitation limit shall be reported as trace.
   Sampling commences once a VOC constituent is detected in the influent.
2. A test method with a practical quantitation level no greater than 0.002 µg/L. All concentrations between the detection limit and practical quantitation level shall be reported as trace.
3. Test Method to be EPA Methods 314.0 or 314.1, or an equivalent method approved by the Regional Board with a Practical Quantitation Level no greater than 4.0 µg/L. All concentrations between the detection limit and practical quantitation level shall be reported as trace. Sampling commences once perchlorate is detected in the influent.
4. Field Measurements.
5. Acute toxicity testing shall performed as described in Whole Effluent Toxicity Testing Requirements V.A., below.
6. If method not listed, parameters shall be analyzed using the analytical methods described in 40 CFR sections 136.

G. Monitor Location M010

1. The Discharger shall monitor the Sailor Bar Park Well system at M010 as follows:

Table E-3g

Parameter	Units	Sample Type	Minimum Sampling Frequency	Required Analytical Test Method[5]
Volatile Organics	µg/L	Grab	Monthly	[1]
Perchlorate	µg/L	Grab	Monthly[2]	[2]
1,4-Dioxane	µg/L	Grab	Monthly	[3]
Flow[4]	mgd	Measure	Continuous	--
Temperature[4]	^{o}F(^{o}C)	Grab	Monthly	--
Dissolved Oxygen[4]	mg/L	Grab	Monthly	--
Electrical Conductivity[4]	µmhos/cm	Grab	Monthly	--
pH[4]	Standard	Grab	Monthly	--

1. Test Method to be EPA Methods 601and 602 or 8010 and 8020 or 8260, or 500 Series, or an equivalent method approved by the Regional Board with a Practical Quantitation Level no greater than 0.5 µg/L.
   Constituents to be reported are those on the EPAMethod 8260B Short List. All concentrations between the detection level and
2. practical quantitation limit shall be reported as trace.Test Method to be EPA Methods 314.0 or 314.1, or an equivalent method approved by the Regi
   Quantitation Level no greater than 4.0 µg/L. All concentrations between the detection limit and practical quantitation level shall be reported as trace.
3. A test method with a practical quantitation level no greater than 3 µg/L. All concentrations between the detection limit and practical quantitation level shall be reported as trace. Sampling commences when detected in influent three times.
4. Field Measurements.
5. If method not listed, parameters shall be analyzed using the analytical methods described in 40 CFR sections 136.

H. Monitor Point M011

1. This monitor point is no longer used.

I. Monitor Point M012

1. The Discharger shall monitor the low-threat discharges at M012 as follows:

Table E-3i

Parameter	Units	Sample Type	Minimum Sampling Frequency[6]	Required Analytical Test Method[4]
Volatile Organics	µg/L	Grab	Once per 10,000 gallons purge water for Well Purge Beginning, middle and end of Aquifer Test	[1]
N-nitrosodimethylamine[7]	µg/L	Grab	Once per well purge Beginning, middle and end of Aquifer Test	[2]
Perchlorate	µg/L	Grab	Once per well purge Beginning, middle and end of Aquifer Test	[3]
1,4-Dioxane [7]	µg/L	Grab	Once per well purge Beginning, middle and end of Aquifer Test	[4]
Flow[5] [7]	gallons	Measure	Continuous	--
Temperature[5]	^{o}F(^{o}C)	Grab	Once per well purge Beginning, middle and end of Aquifer Test	--
pH[5]	Standard	Grab	Once per well purge Beginning, middle and end of Aquifer Test	--

1. Test Method to be EPA Methods 601and 602 or 8010 and 8020 or 8260, or 500 Series, or an equivalent method approved by the Regional Board with a Practical Quantitation Level no greater than 0.5 µg/L.
2. Constituents to be reported are those on the EPA Method 8260B Short List. All concentrations between the detection level and practical quantitation limit shall be reported as trace.A test method with a practical quantitation level no greater than 0.002 µg/L. All concentratio and practical quantitation level shall be reported as trace.
3. Test Method to be EPA Methods 314.0 or 314.1, or an equivalent method approved by the Regional Board with a Practical Quantitation Level no greater than 4.0 µg/L. All concentrations between the detection limit and practical quantitation level shall be reported as trace.
4. A test method with a practical quantitation level no greater than 3 µg/L. All concentrations between the detection limit and practical quantitation level shall be reported as trace.
5. Field Measurements.
6. Monitoring at M-012 when it is used for well purging or well rehabilitation at AC-6, AC-18 and AC-23 shall occur monthly for each of the wells.
7. Not required for AC-6, AC-18 and AC-23.

J. Monitor Point M013

1. The Discharger shall monitor the AC-6 Well system at M013 as follows:

Table E-3j

Parameter	Units	Sample Type	Minimum Sampling Frequency	Required Analytical Test Method[4]
Volatile Organics	µg/L	Grab	Monthly	[1]

Parameter	Units	Sample Type	Minimum Sampling Frequency	Required Analytical Test Method[4]
Perchlorate	µg/L	Grab	Monthly	[2]
N-nitrosodimethylamine	µg/L	Grab	Monthly	[6]
Flow[3]	mgd	Measure	Continuous	--
Temperature[3]	^{o}F(^{o}C)	Grab	Monthly[5]	--
Dissolved Oxygen[3]	mg/L	Grab	Monthly[5]	--
Electrical Conductivity[3]	µmhos/cm	Grab	Monthly[5]	--
pH[3]	Standard	Grab	Monthly[5]	--
Turbidity[3]	NTU	Grab	Monthly[5]	--

1. Test Method to be EPA Methods 601and 602 or 8010 and 8020 or 8260, or 500 Series, or an equivalent method approved by the Regional Board with a Practical Quantitation Level no greater than 0.5 µg/L.
Constituents to be reported are those on the EPAMethod 8260B Short List. All concentrations between the detection level and practical quantitation limit shall be reported as trace.2. Test Method to be EPA Methods 314.0 or 314.1, or an equivalent method approved by the Regio
Quantitation Level no greater than 4.0 µg/L. All concentrations between the detection limit and practical quantitation level shall be reported as trace.
3. Field Measurements.
4. If method not listed, parameters shall be analyzed using the analytical methods described in 40 CFR sections 136.
5. Samples only collected during discharge to receiving water not during times of discharge to potable system.
6. A test method with a practical quantitation level no greater than 0.002 µg/L. All concentrations between the detection limit and practical quantitation level shall be reported as trace. Sampling commences once NDMA is detected in the influent.

K. Monitor Points M014 and M015

1. The Discharger shall monitor the AC-18 Well system and the AC-23 Well system at M-014 and M015, respectively as follows:

Table E-3k

Parameter	Units	Sample Type	Minimum Sampling Frequency	Required Analytical Test Method[4]
Volatile Organics	µg/L	Grab	Monthly	[1]
Perchlorate	µg/L	Grab	Monthly	[2]
Flow[3]	mgd	Measure	Continuous	--
Temperature[3]	^{o}F(^{o}C)	Grab	Monthly[5]	--
Dissolved Oxygen[3]	mg/L	Grab	Monthly[5]	--
Electrical Conductivity[3]	µmhos/cm	Grab	Monthly[5]	--
pH[3]	Standard	Grab	Monthly[5]	--
Turbidity[3]	NTU	Grab	Monthly[5]	--

1. Test Method to be EPA Methods 601and 602 or 8010 and 8020 or 8260, or 500 Series, or an equivalent method approved by the Regional Board with a Practical Quantitation Level no greater than 0.5 µg/L.
Constituents to be reported are those on the EPA Method 8260B Short List. All concentrations between the detection level and practical quantitation limit shall be reported as trace. Sampling commences once VOCs are detected in the influent.
2. Test Method to be EPA Methods 314.0 or 314.1, or an equivalent method approved by the Regional Board with a Practical Quantitation Level no greater than 4.0 µg/L. All concentrations between the detection limit and practical quantitation level shall be reported as trace.
3. Field Measurements.
4. If method not listed, parameters shall be analyzed using the analytical methods described in 40 CFR sections 136.
5. Samples only collected during discharge to receiving water not during times of discharge to potable system.

L. Monitor Point M016

1. The Discharger shall monitor GET AB at M016 as follows:

Table E-3l

Parameter	Units	Sample Type	Minimum Sampling Frequency	Required Analytical Test Method[7]
Volatile Organics	µg/L	Grab	Monthly	[1]

Parameter	Units	Sample Type	Minimum Sampling Frequency	Required Analytical Test Method[7]
N-nitrosodimethylamine	µg/L	Grab	Monthly	[2]
Perchlorate	µg/L	Grab	Monthly	[3]
Semi-Volatile Organics	µg/L	Grab	Quarterly[9]	[4]
Flow[5]	mgd	Measure	Continuous	--
Temperature[5]	^{o}F(^{o}C)	Grab	Monthly	--
Dissolved Oxygen[5]	mg/L	Grab	Monthly	--
Turbidity[5]	NTU	Grab	Monthly	--
Electrical Conductivity[5]	µmhos/cm	Grab	Monthly	--
pH[5]	Standard	Grab	Monthly	--
Hardness as $CaCO_3$	mg/L	Grab	Quarterly	--
Total Dissolved Solids	mg/L	Grab	Monthly	--
Acute Toxicity	% Survival	Grab	Quarterly	[6]
Mercury (methyl)	µg/L	Grab	1/Year	[8]

1. Test Method to be EPA Methods 601and 602 or 8010 and 8020 or 8260, or 500 Series, or an equivalent method approved by the Regional Board with a Practical Quantitation Level no greater than 0.5 µg/L.
2. Constituents to be reported are those on the EPA Method 8260B Short List. All concentrations between the detection level and practical quantitation limit shall be reported as trace.A test method with a practical quantitation level no greater than 0.002 µg/L. All concentrations b and practical quantitation level shall be reported as trace.
3. Test Method to be EPA Methods 314.0 or 314.1, or an equivalent method approved by the Regional Board, with a Practical Quantitation Level no greater than 4.0 µg/L. All concentrations between the detection limit and practical quantitation level shall be reported as trace.
4. Test Method to be EPA Methods 8270 or 500 Series Method, or an equivalent method approved by the Regional Board with a Practical Quantitation Level no greater than 0.5 µg/L. All concentrations between the detection limit and practical quantitation level shall be reported as trace.
5. Field Measurements.
6. Acute toxicity testing shall performed as described in Whole Effluent Toxicity Testing Requirements V.A., below.
7. If method not listed, parameters shall be analyzed using the analytical methods described in 40 CFR sections 136.
8. Unfiltered methyl mercury and total mercury samples shall be taken using clean hands/dirty hands procedures, as described in U.S. EPA method 1669: Sampling Ambient Water for Trace Metals at EPA Water Quality Criteria Levels, for collection of equipment blanks (section 9.4.4.2), and shall be analyzed by U.S. EPA method 1630/1631 (Revision E) with a method detection limit of 0.02 ng/l for methyl mercury and 0.2 ng/l for total mercury**.**
9. Sampling commences once SVOCs are detected in the influent sampling.

M. Monitor Point M017

1. The Discharger shall monitor the White Rock GET at M017 as follows:

Table E-3m

Parameter	Units	Sample Type	Minimum Sampling Frequency	Required Analytical Test Method[7]
Volatile Organics	µg/L	Grab	Monthly	[1]
N-nitrosodimethylamine	µg/L	Grab	Monthly[8]	[2]
Perchlorate	µg/L	Grab	Monthly	[3]
Semi-Volatile Organics	µg/L	Grab	Quarterly	[4]
Flow[5]	mgd	Measure	Continuous	--
Temperature[5]	^{o}F(^{o}C)	Grab	Monthly	--
Dissolved Oxygen[5]	mg/L	Grab	Monthly	--
Turbidity[5]	NTU	Grab	Monthly	--
Electrical Conductivity[5]	µmhos/cm	Grab	Monthly	--
pH[5]	Standard	Grab	Monthly	--
Hardness as $CaCO_3$	mg/L	Grab	Annually	--
Total Dissolved Solids	mg/L	Grab	Quarterly	--

Parameter	Units	Sample Type	Minimum Sampling Frequency	Required Analytical Test Method[7]
Acute Toxicity	% Survival	Grab	Quarterly	[6]

1. Test Method to be EPA Methods 601and 602 or 8010 and 8020 or 8260, or 500 Series, or an equivalent method approved by the Regional Board with a Practical Quantitation Level no greater than 0.5 µg/L.
2. Constituents to be reported are those on the EPA Method 8260B Short List. All concentrations between the detection level and practical quantitation limit shall be reported as trace.A test method with a practical quantitation level no greater than 0.002 µg/L. All concentrations b and practical quantitation level shall be reported as trace.
3. Test Method to be EPA Methods 314.0 or 314.1, or an equivalent method approved by the Regional Board. with a Practical Quantitation Level no greater than 4.0 µg/L. All concentrations between the detection limit and practical quantitation level shall be reported as trace.
4. Test Method to be EPA Methods 8270 or 500 Series Method, or an equivalent method approved by the Regional Board with a Practical Quantitation Level no greater than 5 µg/L. All concentrations between the detection limit and practical quantitation level shall be reported as trace.
5. Field Measurements.
6. Acute toxicity testing shall be performed as described in Whole Effluent Toxicity Testing Requirements V.A., below.
7. If method not listed, parameters shall be analyzed using the analytical methods described in 40 CFR sections 136.
8. Sampling commences once three samples of the influent are found to contain NDMA above the detection limit.

V. WHOLE EFFLUENT TOXICITY TESTING REQUIREMENTS

A. Acute Toxicity Testing. The Discharger shall conduct acute toxicity testing to determine whether the effluent is contributing acute toxicity to the receiving water. The Discharger shall meet the following acute toxicity testing requirements:

1. *Monitoring Frequency* – The Discharger shall perform quarterly acute toxicity testing.

2. *Sample Types* – The Discharger may use flow-through or static renewal testing. For static renewal testing, the samples shall be grab and shall be representative of the volume and quality of the discharge. The effluent samples shall be taken at the effluent monitoring locations M001, M002, M004, M005, M07, M008, M009, M016 and M017.

3. *Test Species* – Test species shall be fathead minnows (*Pimephales promelas*).

4. *Methods* – The acute toxicity testing samples shall be analyzed using EPA-821-R-02-012, Fifth Edition. Temperature and pH shall be recorded at the time of sample collection. Total residual chlorine shall be recorded for tests of GET AB effluent. No pH adjustment may be made unless approved by the Executive Officer.

5. *Test Failure* – If an acute toxicity test does not meet all test acceptability criteria, as specified in the test method, the Discharger must re-sample and re-test as soon as possible, not to exceed 7 days following notification of test failure.

B. Chronic Toxicity Testing. The Discharger shall conduct three species chronic toxicity testing to determine whether the effluent is contributing chronic toxicity to the receiving water. The Discharger shall meet the following chronic toxicity testing requirements:

1. *Monitoring Frequency –* The Discharger shall perform annual three species chronic toxicity testing.

2. *Sample Types* – Effluent samples shall grab and shall be representative of the volume and quality of the discharge. The effluent samples shall be taken at the effluent monitoring location M001 and M002. The receiving water control shall be a grab sample obtained from the sampling location R001, as identified in this Monitoring and Reporting Program.

3. *Sample Volumes* – Adequate sample volumes shall be collected to provide renewal water to complete the test in the event that the discharge is intermittent.

4. *Test Species* – Chronic toxicity testing measures sublethal (e.g., reduced growth, reproduction) and/or lethal effects to test organisms exposed to an effluent compared to that of the control organisms. The Discharger shall conduct chronic toxicity tests with:

- The cladoceran, water flea, *Ceriodaphnia dubia* (survival and reproduction test);
- The fathead minnow, *Pimephales promelas* (larval survival and growth test); and
- The green alga, *Selenastrum capricornutum* (growth test).

5. *Methods* – The presence of chronic toxicity shall be estimated as specified in *Short-term Methods for Estimating the Chronic Toxicity of Effluents and Receiving Waters to Freshwater Organisms, Fourth Edition*, EPA/821-R-02-013, October 2002.

6. *Reference Toxicant* – As required by the SIP, all chronic toxicity tests shall be conducted with concurrent testing with a reference toxicant and shall be reported with the chronic toxicity test results.

7. *Dilutions* – For regular and accelerated chronic toxicity monitoring, it is not necessary to perform the test using a dilution series. The test may be performed using 100% effluent and two controls. For TRE monitoring, the chronic toxicity testing shall be performed using the dilution series identified in Table E-5, below, unless use of an alternative diluent is detailed in the submitted TRE Action Plan, or when the receiving water is toxic.

Table E-5. Chronic Toxicity Testing Dilution Series

Sample	Dilutions (%)					Controls	
	100	75	50	25	12.5	Receiving Water	Laboratory Water
% Effluent	100	75	50	25	12.5	0	0
% Receiving Water	0	25	50	75	87.5	100	0
% Laboratory Water	0	0	0	0	0	0	100

7. *Test Failure* – The Discharger must re-sample and re-test as soon as possible, but no later than fourteen (14) days after receiving notification of a test failure. A test failure is defined as follows:

a. The reference toxicant test or the effluent test does not meet all test acceptability criteria as specified in the *Short-term Methods for Estimating the Chronic Toxicity of Effluents and Receiving Waters to Freshwater Organisms, Fourth Edition*, EPA/821-R-02-013, October 2002 (Method Manual), and its subsequent amendments or revisions; or

b. The percent minimum significant difference (PMSD) measured for the test exceeds the upper PMSD bound variability criterion in Table 6 on page 52 of the Method Manual.

(A retest is only required in this case if the test results do not exceed the monitoring trigger specified in the Special Provision at section VI. 2.a.iii. of the Order.)

8. The percent minimum significant difference (PMSD) measured for the test exceeds the upper PMSD bound variability criterion in Table 6 on page 52 of the Method Manual. (A retest is only required in this case if the test results do not exceed the monitoring trigger specified in the Special Provision at section VI. 2.a.iii. of the Order.).

C. WET Testing Notification Requirements. The Discharger shall notify the Central Valley Water Board within 24-hours after the receipt of test results exceeding the monitoring trigger during regular or accelerated monitoring, or an exceedance of the acute toxicity effluent limitation.

D. WET Testing Reporting Requirements. All toxicity test reports shall include the contracting laboratory's complete report provided to the Discharger and shall be in accordance with the appropriate "Report Preparation and Test Review" sections of the method manuals. At a minimum, whole effluent toxicity monitoring shall be reported as follows:

1. Chronic WET Reporting. Regular chronic toxicity monitoring results shall be reported to the Central Valley Water Board within 30 days following completion of the test, and shall contain, at minimum:

a. The results expressed in TUc, measured as 100/NOEC, and also measured as 100/LC50, 100/EC25, 100/IC25, and 100/IC50, as appropriate.

b. The statistical methods used to calculate endpoints;

c. The statistical output page, which includes the calculation of the percent minimum significant difference (PMSD);

d. The dates of sample collection and initiation of each toxicity test; and

e. The results compared to the numeric toxicity monitoring trigger.

Additionally, the monthly discharger self-monitoring reports shall contain an updated chronology of chronic toxicity test results expressed in TUc, and organized by test species, type of test (survival, growth or reproduction), and monitoring frequency, i.e., either quarterly, monthly, accelerated, or Toxicity Reduction Evaluation (TRE).

2. Acute WET Reporting. Acute toxicity test results shall be submitted with the monthly discharger self-monitoring reports and reported as percent survival.

3. TRE Reporting. Reports for TREs shall be submitted in accordance with the schedule contained in the Discharger's approved TRE Workplan, or as amended by the Discharger's TRE Action Plan.

4. Quality Assurance (QA). The Discharger must provide the following information for QA purposes:

a. Results of the applicable reference toxicant data with the statistical output page giving the species, NOEC, LOEC, type of toxicant, dilution water used, concentrations used, PMSD, and dates tested.

b. The reference toxicant control charts for each endpoint, which include summaries of reference toxicant tests performed by the contracting laboratory.

c. Any information on deviations or problems encountered and how they were dealt with.

VI. LAND DISCHARGE MONITORING REQUIREMENTS -

A. Monitor Point LN001

1. In addition to the monitoring required above, the Discharger shall monitor the discharge from GET AB and White Rock GET to Rebel Hill Ditch at LN001 as follows:

Table E-5a. Land Discharge Monitoring Requirements

Parameter	Units	Sample Type	Minimum Sampling Frequency	Required Analytical Test Method
flow	MGD	meter	continuous	

VII. RECYCLING MONITORING REQUIREMENTS

A. Monitor Points LN002 and LN003

1. The Discharger shall monitor the discharge from GET AB and the White Rock GET to the Aerojet industrial water supply system at LN002 and to the Teichert facility on Grant Line Road at LN003 as follows:

Table E-6a. Recycling Monitoring Requirements

Parameter	Units	Sample Type	Minimum Sampling Frequency	Required Analytical Test Method
flow	MGD	meter	continuous	

VIII. RECEIVING WATER MONITORING REQUIREMENTS

A. Monitor Location R001, R002, R003, R004, R005, R0006, R007, R010, R011, R014, R015, R016, and R017

1. The Discharger shall monitor the American River at R001, R002, R003, R004, R005, R006, R007, R010, R011, R014 and R015, and Alder Creek at R016 and R017 as follows:

Table E-7a. Receiving Water Monitoring Requirements

Parameter	Units	Sample Type	Minimum Sampling Frequency[6],[7],[8]	Required Analytical Test Method[5]
Volatile Organics	µg/L	Grab	Monthly	[1]
N-nitrosodimethlyamine	µg/L	Grab	Monthly	[2]
Perchlorate	µg/L	Grab	Monthly	[3]

Parameter	Units	Sample Type	Minimum Sampling Frequency[6],[7],[8]	Required Analytical Test Method[5]
Temperature[4]	^{o}F(^{o}C)	Grab	Monthly	[5]
Dissolved Oxygen[4]	mg/L	Grab	Monthly	[5]
Turbidity	NTU	Grab	Monthly	[5]
Electrical Conductivity[4]	µmhos/cm	Grab	Monthly	[5]
pH[4]	Standard	Grab	Monthly	[5]
Total Dissolved Solids	mg/L	Grab	Monthly	[5]

1. Test Method to be EPA Methods 601and 602 or 8010 and 8020 or 8260, or 500 Series, or an equivalent method Approved by the Regional Board with a Practical Quantitation Level no greater than 0.5 µg/L. . Constituents to be reported are those on the EPA Method 8260B Short List. All concentrations between the detection level and practical quantitation limit shall be reported as trace.
2. A test method with a practical quantitation level no greater than 0.002 µg/L. All concentrations between the detection limit and practical quantitation level shall be reported as trace.
3. A test method with a practical quantitation level no greater than 3 µg/L. All concentrations between the detection limit and practical quantitation level shall be reported as trace.
4. Field Measurements.
5. Parameters shall be analyzed using the analytical methods described in 40 CFR sections 136.
6. For R-010 and R-011, monitor only when a continuous discharge is occurring at M-011 and/or M-015.
7. For R-016 and R017 only when discharge is occurring at Outfall 009.

B. Monitor Locations R012 and R013

1. The Discharger shall monitor Morrison Creek at R012 and R013 as follows:

Table E-7b. Receiving Water Monitoring Requirements

Parameter	Units	Sample Type	Minimum Sampling Frequency	Required Analytical Test Method[4]
Volatile Organics	µg/L	Grab	Monthly	[1]
Perchlorate	µg/L	Grab	Monthly	[2]
Temperature[3]	^{o}F(^{o}C)	Grab	Monthly	--
Dissolved Oxygen[3]	mg/L	Grab	Monthly	--
Turbidity	NTU	Grab	Monthly	--
Electrical Conductivity[3]	µmhos/cm	Grab	Monthly	--
pH[3]	Standard	Grab	Monthly	--
Hardness as $CaCO_3$	mg/L	Grab	Quarterly	--
Total Dissolved Solids	mg/L	Grab	Monthly	--

1. Test Method to be EPA Methods 601and 602 or 8010 and 8020 or 8260, or 500 Series, or an equivalent method Approved by the Regional Board. with a Practical Quantitation Level no greater than 0.5 µg/L.
Constituents to be reported are those on the EPA Method 8260B Short List. All concentrations between the detection level and practical quantitation limit shall be reported as trace.2. Test Method to be EPA Methods 314.0 or 314.1, or an equivalent method approve
Practical
Quantitation Level no greater than 4.0 µg/L. All concentrations between the detection limit and practical quantitation level shall be reported as trace.
3. Field Measurements.
4. Parameters shall be analyzed using the analytical methods described in 40 CFR sections 136, unless otherwise specified.

IX. OTHER MONITORING REQUIREMENTS

A. Biosolids

1. Monitoring Location BIO-001

a. Monthly volume of biosolids generated and disposal location.

X. REPORTING REQUIREMENTS

A. General Monitoring and Reporting Requirements

1. The Discharger shall comply with all Standard Provisions (Attachment D) related to monitoring, reporting, and recordkeeping.

2. Upon written request of the Central Valley Water Board, the Discharger shall submit a summary monitoring report. The report shall contain both tabular and graphical summaries of the monitoring data obtained during the previous year(s).

3. **Compliance Time Schedules.** For compliance time schedules included in the Order, the Discharger shall submit to the Central Valley Water Board, on or before each compliance due date, the specified document or a written report detailing compliance or noncompliance with the specific date and task. If noncompliance is reported, the Discharger shall state the reasons for noncompliance and include an estimate of the date when the Discharger will be in compliance. The Discharger shall notify the Central Valley Water Board by letter when it returns to compliance with the compliance time schedule.

4. The Discharger shall report to the Central Valley Water Board any toxic chemical release data it reports to the State Emergency Response Commission within 15 days of reporting the data to the Commission pursuant to section 313 of the "*Emergency Planning and Community Right to Know Act*" of 1986.

5. **Within 24-hours** after the Discharger has received information that its discharge exceeds effluent limitations, or if operational monitoring of the treatment facilities indicates that there is a potential for effluent limitations to be exceeded, the Discharger shall notify the Board, City of Sacramento Department of Utilities, the Freeport Regional Water Authority and Carmichael Water District. Arden-Cordova Water Service and the Bureau of Reclamation shall be notified if the discharge that is in violation is to Alder Creek, tributary to Lake Natoma.

B. Self-Monitoring Reports (SMR's)

1. The Discharger shall electronically submit SMR's using the State Water Board's California Integrated Water Quality System (CIWQS) Program Web site (http://www.waterboards.ca.gov/ciwqs/index.html). The CIWQS Web site will provide additional information for SMR submittal in the event there will be a planned service interruption for electronic submittal.
2. The Discharger shall report in the SMR the results for all monitoring specified in this MRP under sections III through IX. The Discharger shall submit **monthly** SMR's including the results of all required monitoring using U.S. EPA-approved test methods or other test methods specified in this Order. SMR's are to include all new monitoring results obtained since the last SMR was submitted. If the Discharger monitors any pollutant more frequently than required by this Order, the results of this monitoring shall be included in the calculations and reporting of the data submitted in the SMR.
3. Monitoring periods and reporting for all required monitoring shall be completed according to the following schedule:

Table E-8. Monitoring Periods and Reporting Schedule

Sampling Frequency	Monitoring Period Begins On…	Monitoring Period	SMR Due Date
Continuous	Permit effective date	All	Submit with monthly SMR
Monthly	Permit effective date	1st day of calendar month through last day of calendar month	15th day of the second month following the monitoring period
Quarterly	Permit effective date	1 January through 31 March 1 April through 30 June 1 July through 30 September 1 October through 31 December	Submit with Monthly SMR within the quarter
Semiannually	Permit effective date	1 January through 30 June 1 July through 31 December	Submit with Monthly SMR within the period
Annually	Permit effective date	1 January through 31 December	Submit Monthly SMR within the period

4. Reporting Protocols. The Discharger shall report with each sample result the applicable Practical Quantitation Level (PQL) and the current laboratory's Method Detection Limit (MDL), as determined by the procedure in 40 C.F.R. part 136.

   The Discharger shall report the results of analytical determinations for the presence of chemical constituents in a sample using the following reporting protocols:

   a. Sample results greater than or equal to the PQL shall be reported as measured by the laboratory (i.e., the measured chemical concentration in the sample).

   b. Sample results less than the PQL, but greater than or equal to the laboratory's MDL, shall be reported as "Detected, but Not Quantified," or DNQ. The estimated chemical concentration of the sample shall also be reported.

      For the purposes of data collection, the laboratory shall write the estimated chemical concentration next to DNQ. The laboratory may, if such information is available, include numerical estimates of the data quality for the reported result. Numerical estimates of data quality may be percent accuracy (± a percentage of the reported value), numerical ranges (low to high), or any other means considered appropriate by the laboratory.

   c. Sample results less than the laboratory's MDL shall be reported as "Not Detected," or ND.

   d. Dischargers are to instruct laboratories to establish calibration standards so that the Practical Quantitation Level (PQL) value (or its equivalent if there is differential treatment of samples relative to calibration standards) is the lowest calibration standard. At no time is the Discharger to use analytical data derived from extrapolation beyond the lowest point of the calibration curve.

5. Multiple Sample Data. When determining compliance with an AMEL for priority pollutants and more than one sample result is available, the Discharger shall compute the arithmetic mean unless the data set contains one or more reported determinations of "Detected, but Not Quantified" (DNQ) or "Not Detected" (ND). In those cases, the Discharger shall compute the median in place of the arithmetic mean in accordance with the following procedure:

    a. The data set shall be ranked from low to high, ranking the reported ND determinations lowest, DNQ determinations next, followed by quantified values (if any). The order of the individual ND or DNQ determinations is unimportant.

    b. The median value of the data set shall be determined. If the data set has an odd number of data points, then the median is the middle value. If the data set has an even number of data points, then the median is the average of the two values around the middle unless one or both of the points are ND or DNQ, in which case the median value shall be the lower of the two data points where DNQ is lower than a value and ND is lower than DNQ.

6. The Discharger shall submit SMR's in accordance with the following requirements:

    a. The Discharger shall arrange all reported data in a tabular format. The data shall be summarized to clearly illustrate whether the facility is operating in compliance with interim and/or final effluent limitations. The Discharger is not required to duplicate the submittal of data that is entered in a tabular format within CIWQS. When electronic submittal of data is required and CIWQS does not provide for entry into a tabular format within the system, the Discharger shall electronically submit the data in a tabular format as an attachment.

    b. The Discharger shall attach a cover letter to the SMR. The information contained in the cover letter shall clearly identify violations of the WDR's; discuss corrective actions taken or planned; and the proposed time schedule for corrective actions. Identified violations must include a description of the requirement that was violated and a description of the violation.

7. The Discharger shall submit in the SMR's calculations and reports in accordance with the following requirements:

    a. **Annual Average Limitations**. For constituents with effluent limitations specified as "annual average" (aluminum, electrical conductivity, iron, and manganese) the Discharger shall report the annual average in the June SMR. The annual average shall be calculated as the average of the samples gathered for the calendar year.

    b. **Mass Loading Limitations**. For BOD5, TSS, and ammonia, the Discharger shall calculate and report the mass loading (lbs/day) in the SMRs. The mass loading shall be calculated as follows:

    Mass Loading (lbs/day) = Flow (MGD) x Concentration (mg/L) x 8.34

    When calculating daily mass loading, the daily average flow and constituent concentration shall be used. For weekly average mass loading, the weekly average flow and constituent concentration shall be used. For monthly average mass loading, the monthly average flow and constituent concentration shall be used.

    c. **Removal Efficiency (BOD5 and TSS).** The Discharger shall calculate and report the percent removal of BOD5 and TSS in the SMRs. The percent removal shall be

calculated as specified in Section VII.A. of the Limitations and Discharge Requirements.

d. **Total Coliform Organisms Effluent Limitations**. Not Applicable.

e. **Dissolved Oxygen Receiving Water Limitations**. The Discharger shall calculate and report monthly in the self-monitoring report: i) the dissolved oxygen concentration, ii) the percent of saturation in the main water mass, and iii) the 95th percentile dissolved oxygen concentration.

f. **Turbidity Receiving Water Limitations**. The Discharger shall calculate and report the turbidity increase in the receiving water applicable to the natural turbidity condition specified in Section V.A.17.a-e. of the Limitations and Discharge Requirements.

g. **Temperature Receiving Water Limitations**. The Discharger shall calculate and report the temperature increase in the receiving water based on the difference in temperature R001 and R002, R003 and R004, R006 and R007, R010 and R011, R012 and R013, and when appropriate R014 and R015, and R016 and R017.

C. Discharge Monitoring Reports (DMR's) – Not Applicable

D. Other Reports

1. Annual Operations Report. By 30 January of each year, the Discharger shall submit a written report to the Executive Officer containing the following:

   a. The names, certificate grades, and general responsibilities of all persons employed at the Facility.

   b. The names and telephone numbers of persons to contact regarding the plant for emergency and routine situations.

   c. A statement certifying when the flow meter(s) and other monitoring instruments and devices were last calibrated, including identification of who performed the calibration.

   d. A statement certifying whether the current operation and maintenance manual, and contingency plan, reflect the wastewater treatment plant as currently constructed and operated, and the dates when these documents were last revised and last reviewed for adequacy.

   e. The Discharger may also be requested to submit an annual report to the Central Valley Water Board with both tabular and graphical summaries of the monitoring data obtained during the previous year. Any such request shall be made in writing. The report shall discuss the compliance record. If violations have occurred, the report shall also discuss the corrective actions taken and planned to bring the discharge into full compliance with the waste discharge requirements.

ATTACHMENT F – FACT SHEET

Contents

I. Permit Information 3
II. Facility Description 5
A. Description of Wastewater and Biosolids Treatment and Controls 7
B. Discharge Points and Receiving Waters 8
C. Summary of Existing Requirements and Self-Monitoring Report (SMR) Data 9
D. Compliance Summary 10
E. Planned Changes 10
III. Applicable Plans, Policies, and Regulations 10
A. Legal Authorities 10
B. California Environmental Quality Act (CEQA) 11
C. State and Federal Laws, Regulations, Policies, and Plans 11
D. Impaired Water Bodies on CWA 303(d) List 13
E. Other Plans, Polices and Regulations 13
IV. Rationale For Effluent Limitations and Discharge Specifications 14
A. Discharge Prohibitions 15
B. Technology-Based Effluent Limitations 15
1. Scope and Authority 15
2. Applicable Technology-Based Effluent Limitations 16
C. Water Quality-Based Effluent Limitations (WQBELs) 18
1. Scope and Authority 18
2. Applicable Beneficial Uses and Water Quality Criteria and Objectives 19
3. Determining the Need for WQBELs 25
4. WQBEL Calculations 30
5. Whole Effluent Toxicity (WET) 32
D. Final Effluent Limitation Considerations 35
1. Mass-based Effluent Limitations 35
2. Averaging Periods for Effluent Limitations 35
3. Anti-Backsliding Requirements 35
4. Antidegradation Policies 35
5. Stringency of Requirements for Individual Pollutants 35
E. Interim Effluent Limitations F-36
F. Land Discharge Specifications F-36
G. Recycling Specifications – Not applicable F-36
V. Rationale for Receiving Water Limitations 38
A. Surface Water 38
B. Groundwater 39
VI. Rationale for Provisions 39
A. Standard Provisions 39
B. Special Provisions 39
1. Reopener Provisions 39
2. Special Studies and Additional Monitoring Requirements 40
3. Best Management Practices and Pollution Prevention 43
4. Construction, Operation, and Maintenance Specifications 43
5. Other Special Provisions 43

6. Compliance Schedules 43
VII. Rationale for Monitoring and Reporting Requirements 43
A. Influent Monitoring 43
B. Effluent Monitoring 43
C. Whole Effluent Toxicity Testing Requirements 44
D. Receiving Water Monitoring 44
1. Surface Water 44
2. Groundwater 44
E. Other Monitoring Requirements 44
VIII. Public Participation 45
A. Notification of Interested Parties 45
B. Written Comments 45
C. Public Hearing 45
D. Reconsideration of Waste Discharge Requirements 46
E. Information and Copying 46
F. Register of Interested Persons 46
G. Additional Information 46

Tables

Table F-1. Facility Information 3
Table F-2. Historic Effluent Limitations and Monitoring Data 9
Table F-3. Basin Plan Beneficial Uses 12
Table F-4. 303 (d) List for the American River 13
Table F-5. Summary if Technology Based Effluent Limits F-17
Table F-6 Summary of ECA Evaluations F-24
Table F-7 Summary of Reasonable Potential Analysis F-25
Table F-8 Summary of Water Quality-Based Effluent Limitations F-30
Table F-9 Whole Effluent Chronic Toxicity Testing Results F-31
Table F-10a Summary of Final Effluent Limitations F-34
Table F-10b Summary of Final Effluent Limitations EFF-012 ..... F-34

ATTACHMENT F – FACT SHEET

As described in section I, the Central Valley Water Board incorporates this Fact Sheet as findings of the Central Valley Water Board supporting the issuance of this Order. This Fact Sheet includes the legal requirements and technical rationale that serve as the basis for the requirements of this Order.

This Order has been prepared under a standardized format to accommodate a broad range of discharge requirements for Dischargers in California. Only those sections or subsections of this Order that are specifically identified as “not applicable” have been determined not to apply to this Discharger. Sections or subsections of this Order not specifically identified as “not applicable” are fully applicable to this Discharger.

I. PERMIT INFORMATION

The following table summarizes administrative information related to the facility.

Table F-1. Facility Information

WDID	**5A342000006**
Discharger	Aerojet Rocketdyne, Inc.
Name of Facility	Groundwater Extraction and Treatment Systems ARGET, GET E/F, GET HA, GET J, 4665, GET KA, GET LA, GET LB, GET AB, White Rock GET, Sailor Bar Park Well, , Golden State Water Wells and Low-Threat Discharges
Facility Address	Aerojet Road
	Sacramento, CA 95813-6000
	Sacramento County
Facility Contact, Title and Phone	Mr. Ben Dutro, (916) 355-5150
Authorized Person to Sign and Submit Reports	Scott Goulart, Director Remediation, (916) 355-5454
Mailing Address	P.O. Box 13222 Sacramento, CA 95813-6000
Billing Address	P.O. Box 13222 Sacramento, CA 95813-6000
Type of Facility	Groundwater Treatment
Major or Minor Facility	Minor
Threat to Water Quality	2
Complexity	B
Pretreatment Program	No
Recycling Requirements	Producer and User

Facility Permitted/Design Flow	ARGET – 5.04 million gallons per day (mgd) – Discharge 001,Outfall 001 GET E/F – 11.52 mgd – Discharge 002, Outfall 001 GET H-A – 3.46 mgd – Discharge 004, Outfall 005 and/or 006 GET J – 6.75 mgd – Discharge 005, Outfall 001 GET K-A– 4.03 mgd – Discharge 007, Outfall 004 GET L-A – 2.88 mgd – Discharge 008, Outfall 002 GET L-B – 1.44 mgd – Discharge 009, Outfall 002 Sailor Bar Pond – 0.58 mgd – Discharge 010, Outfall 007 AC-6 – 1.08 mgd – Discharge 013, Outfall 004 AC-18 – 2.59 mgd - Discharge 014, Outfall 006 AC-23 – 3.17 mgd – Discharge 015, Outfall 006 GET AB – 5.76 mgd- Discharge 016, Outfall 001 White Rock GET – 1.3 mgd-Discharge 017, Outfall 001 Well 4665 – 1.15 mgd-Discharge 018, Outfall 001
Watersheds	American River and Sacramento River Watersheds
Receiving Waters	American River, Buffalo Creek, Morrison Creek and Alder Creek
Receiving Water Type	Inland Surface Water

A. The Aerojet Rocketdyne, Inc. (hereinafter Discharger) is the owner and operator of ARGET, GET E/F, GET HA, GET J, GET KA, GET LA, GET LB, Sailor Bar Pond Treatment System, Well 4665, AC-6 Well system, AC-18 well system, AC-23 well system, GET AB and White Rock GET (hereinafter Facilities), groundwater treatment systems.

For the purposes of this Order, references to the “discharger” or “permittee” in applicable federal and state laws, regulations, plans, or policy are held to be equivalent to references to the Discharger herein.

B. The Facilities discharge treated groundwater to the American River, Buffalo Creek, Morrison Creek and Alder Creek, waters of the United States, tributary to the Sacramento River, American River, Sacramento River and Lake Natoma, respectively within the American River watershed. The Discharger was previously regulated by Order R5-2011-0088 and National Pollutant Discharge Elimination System (NPDES) Permit No. CA0083861 adopted on 1 December 2011 and expires on 1 December 2016. The Discharger was also regulated by Order R5-2011-0025 which prescribed waste discharge requirements for land application of treated groundwater from the White Rock GET. Attachments B-1 and B-2 provide maps of the area around the Facility. Attachments C-1 through C-10 provides flow schematics of the facilities.

Prior to making any change in the point of discharge, place of use, or purpose of use of treated wastewater that results in a decrease of flow in any portion of a watercourse, the Discharger must file a petition with the State Water Board, Division of Water Rights, and receive approval for such a change. The State Water Board retains the jurisdictional authority to enforce such requirements under Water Code section 1211.

C. The Discharger filed a report of waste discharge and submitted an application for revision of its WDR’s and NPDES permit on 8 March 2013. Supplemental information was requested on 23 May 2013 and received on 13 and 17 June 2013. The application was deemed complete on 17 June 2013. A site visit was conducted on 25 June 2013, to observe operations and to review proposed expansion.

II. FACILITY DESCRIPTIONS

A. The discharger currently owns and operates fourteen groundwater extraction and treatment systems that discharge treated groundwater to surface waters in accordance with an NPDES permit.

1. ARGET (Discharge 001). The American River Study Area (ARSA) treatment system is on the Aerojet site. The facility was constructed in 1997 and originally consisted of ultraviolet/hydrogen peroxide treatment to reduce concentrations of volatile organic compounds (VOCs) and 1,4-dioxane, and air-stripping to remove any remaining VOCs. This facility has been shown to remove VOCs to below detection levels (0.5 µg/L) and 1,4-dioxane to below its detection level (2-10 µg/L). This facility is designed to treat up to 3500 gallons per minute (gpm). Aerojet modified the VOC-removal portion of the facility to utilize ozone/hydrogen peroxide to remove the chlorinated ethene VOCs and 1,4-dioxane at a lower cost than the ultraviolet light system. See Attachment C-1 for the facility process flow.
2. GET E/F (Discharge 002). The GET E/F facility is also on the Aerojet main property. GET E and GET F were originally constructed in the mid-1980's and were subsequently combined into one facility in 2000. The combined facility uses biological reduction and ion exchange to remove perchlorate, ultraviolet light/hydrogen peroxide to destroy NDMA and most of the VOCS, and air stripping to remove the remainder of VOCs from up to 8000 gpm of influent. There is also a sand filter and clarifier for solids control. A screw press has been recently added to dewater the solids with the liquid stream from the screw press discharged back to the influent of the clarifier and the solids disposed of to a landfill. The treatment process has been shown to be effective in removing VOCs to below detection levels (0.5 µg/L), perchlorate to below 4 µg/L, and NDMA to below detection (0.002 –0.0075 µg/L). Testing of the influent and effluent of the treatment facility for full-scan analysis, including tentatively identified compound analysis, did not indicate additional contaminants of concern. See Attachment C-2.
3. GET HA (Discharge 004). The interim GET H facility (Discharge 003) discontinued operation in 2006 and all of the GET H extraction wells feed into the GET HA facility. The GET HA facility, completed in 2006, utilizes ion-exchange resin adsorption to remove perchlorate to less than 4 µg/L, and granular activated carbon (GAC) to remove VOCs to less than 0.5 µg/L, treating a flow of up to 2400 gpm of extracted groundwater. The GET HA system came on-line in summer 2006 and is in the north-central section of Mather Field. The GET HA facility has been able to consistently meet effluent limitations. See Attachment C-4.
4. GET J (Discharge 005). The GET J facility is similar to GET HA, but with the addition of ultraviolet/hydrogen peroxide treatment for the destruction of NDMA and particulate filtration to help the ultraviolet system. The facility was upgraded to allow for hydrogen peroxide addition to be used with the UV treatment to additionally destroy VOCs. The Discharger may discontinue use of the GAC treatment provided the advanced UV oxidation meets VOC effluent limitations. The treatment system is designed to treat in excess of 4150 gpm and is found on Pyrites Way in Gold River. See Attachment C-5.
5. GET KA (Discharge 007). Use of the interim GET K facility (Discharge 006) was discontinued in 2009 with the completion of the GET KA facility. The GET KA facility uses particulate removal, hydrogen peroxide addition and ultraviolet light for treatment of NDMA and low concentrations of VOCs from an influent of 2880 gpm. Space has been reserved for the addition of ion exchange vessels for the removal of perchlorate if needed. The facility is located on Coloma Road in Rancho Cordova. See Attachment C-7.

6. GET LA (Discharge 008). GET LA (Discharge 008) is in Carmichael, near Ancil Hoffman Park. The facility treats NDMA using ultraviolet light. In the future, if VOCs and/or perchlorate are detected in the influent, VOC and/or perchlorate treatment will be added utilizing the same processes described above from the GET KA and GET J facilities. Whenever possible, the discharge from GET LA will be applied to the adjacent Ancil Hoffman Golf Course. See Attachment C-8
7. GET L-B (Discharge 009). GET LB is in Carmichael northeast of GET LA and is adjacent to the Carmichael Water District water treatment plant. The plant utilizes ultraviolet light to destroy NDMA. The facility has been constructed to allow for expansion for perchlorate and VOC treatment units if the influent is determined to contain those pollutants. See Attachment C-9.
8. Sailor Bar Park (Discharge 010). The Sailor Bar Park system provides for removal of VOCs by GAC on a water supply well for the pond in Sailor Bar Park. The park is on the north side of the American River adjacent to the village of Fair Oaks, approximately one half mile west of the Hazel Avenue Bridge.
9. Chettenham (Discharge 011). This discharge no longer exists.Purge and Aquifer Test Waters (Discharge 012). The Discharger develops and purges wells prior to sampling and conducts aquifer tests on extraction/supply wells to determine aquifer characteristics to allow GET systems to be designed. These activities take place over vast areas on and off the Discharger's property. The purge water is generally low in volume (100's – 5000 gallons) and is provided treatment prior to discharge. Treatment is provided on the discharges to remove the pollutants of concern. If treatment is not practical, the water is contained and discharged through the sanitary sewer system with the Discharger's wastewater discharge permit with the SRCSD. In addition to these well discharges, low volumes of water are discharged from three wellhead treatment systems described below in Discharges 013, 014 and 015 during replacement of the ion exchange resin and during well start-up and shut-down. The discharges occur infrequently and depend on the concentration of perchlorate in the influent to the treatment system which affects the useable life of the resin.
10. AC-6 (Discharge 013). Golden State Water Company's (Golden State) water supply well AC-6 on Dolecetto Drive in Rancho Cordova has been found to contain perchlorate. The Discharger has reached agreement with Golden State whereby a treatment system for perchlorate removal using ion-exchange has been added to the well site. The treated water will usually be placed into the potable water distribution system. During periods of low water demand, treated water produced by the well in excess of the demand may also be discharged to the storm drain.
11. AC-18 (Discharge 014). Golden State's water supply well AC-18 on International Drive in Rancho Cordova has been found to contain perchlorate. Similar to well AC-6, perchlorate removal using ion-exchange has been added to AC-18 well site. This well will only be operated on-demand and so the discharge to the storm drain will only occur during well startup and shutdown to minimize pressure issues within the distribution system.
12. AC-23 (Discharge 015). Golden State's water supply well (AC-23) on Capital Center Drive in Rancho Cordova also requires treatment to remove perchlorate. This system is identical to that described above for Discharge 014, Well AC-18.
13. GET AB (Discharge 016). This GET is a recently completed combination of GETs A and B which were initially built in the mid-1980's. GET AB is on the south eastern side of Aerojet and uses bag filters to remove sediment, ion exchange to remove perchlorate, ultraviolet/hydrogen peroxide treatment for the destruction of NDMA and volatile organics and air stripping to remove remaining volatile organics from up to 4000 gpm of

extracted groundwater. Part of the influent for GET AB comes from extraction wells on the former White Rock Road North Dump with the rest of the wells being along the eastern side of Aerojet. The discharge of the treated groundwater is firstly to the Aerojet industrial water supply system and the Teichert Aggregate Processing Plant on Grant Line Road (and potentially a future plant on Scott Road) depending on their respective needs. The treated water can also be discharged to Rebel Hill Ditch for infiltration or to Buffalo Creek upstream of the other GET discharges. See Attachment C-10.

14. White Rock GET (Discharge 017). This GET facility is located along Grant Line Road across from the Teichert Aggregate Processing Plant. The GET receives groundwater from two extraction wells and the Teichert water supply well. The water is treated using air stripping to remove volatile organics and ion exchange to remove perchlorate. The treated water is provided to Teichert for their use in the Grant Line plant and potentially a future second processing plant on Scott road. If the water is not needed by Teichert, then it is piped up to GET AB and discharged with its effluent in one of the manners described above. The treatment system is designed to treat up to 900 gpm. The facility previously operated under waste discharge requirements, R5-2011-0025 with discharge to Teichert or with the GET AB effluent. See Attachment C-11.
15. Well 4665 (Discharge 018). This well is in the Gold River area of Sacramento County and discharges untreated groundwater to a storm drain that discharges to Buffalo Creek. The well discharges up to 1.15 million gallons per day. The well contains low levels of TCE, perchlorate, chloroform and NDMA at levels that are below drinking water standards and Public Health Goals.

B. Description of Wastewater and Biosolids Treatment and Controls

1. The treatment systems at the Facilities use bag filters on the influent, ion exchange or biological reduction for perchlorate removal, granular activated carbon and/or air stripping and/or ultraviolet/hydrogen peroxide and/or hydrogen peroxide/ozone for the removal of volatile organics, and ultraviolet/hydrogen peroxide for the removal of n-nitrosodimethylamine. GET E/F, the only facility using biological reduction for removal of perchlorate also includes a clarifier, sand filter and screw press for the removal and dewatering of spent biolsolids from the perchlorate treatment units. The dried biosolids are sent to a landfill for disposal.

2. VOCs can be easily removed from the extracted groundwater using a variety of treatment processes. Aerojet uses air-stripping, carbon adsorption (GAC) and ultraviolet or ozone oxidation in different combinations to remove the VOCs. At GET facilities that have high concentrations of VOCs Aerojet uses ultraviolet oxidation/hydrogen peroxide or oxidation using ozone, to destroy a majority of the VOCs, utilizing air stripping or GAC to remove residual VOCs. For lower concentrations of VOCs, GAC alone is utilized. Spent GAC is trucked to a permitted destruction facility.

3. Perchlorate is removed from the extracted groundwater using either biological reduction or ion-exchange. Biological reduction is performed by growing bacteria on carbon or sand in a fluidized bed reactor. A carbon source (e.g., ethanol) is injected into the influent to provide food for the bacteria. The bacteria will remove oxygen and nitrate prior to destroying the perchlorate. Biosolids are generated as bacteria material is removed from the system. The biosolids are collected on continuously cleaning sand filters. The backwash water proceeds through a clarifier to remove the solids prior to discharge. The solids collected in the clarifier are either dewatered using a screw-press

and hauled to a permitted disposal facility or trucked to the sanitary sewer and the supernatant off of the clarifier is returned to the treatment process. The ion-exchange process uses a perchlorate-specific ion exchange resin that is disposed of when the resin's capacity for taking up perchlorate is exhausted. The resin is then replaced with fresh resin and the spent resin taken to a permitted disposal facility.

4. Removal of NDMA is accomplished using ultraviolet light oxidation in combination with hydrogen peroxide. This process is highly energy and concentration dependent. Hydrogen peroxide can be added to this process to oxidize VOCs. The Discharger has demonstrated that 0.007 µg/L is the technical and cost effective effluent level (Best Available/Cost Effective Technology (BACT)) for GETs J, KA, LA and LB. GET E/F and GET AB systems are able to achieve concentrations less than 0.003 µg/L.

C. Discharge Points and Receiving Waters

1. The Facility is located in Section T9N, R7E, MDB&M, as shown in Attachments B-1 and B-2, parts of this Order.

2. Treated groundwater is discharged as follows:

Discharge Point	Effluent Description	Discharge Point Latitude	Discharge Point Longitude	Receiving Water
Outfall 001	Treated Groundwater from ARGET, GET E/F, GET J, GET AB, White Rock GET Well 4665	38º, 38', 00" N	121º, 16', 07" W	Buffalo Creek to American River
Outfall 002	Treated Groundwater from GET L-A	38º, 36', 29" N	121º, 18', 33" W	American River
Outfall 002A	Treated Groundwater from GET L-B	38º, 37', 31" N	121º, 18', 13" W	Drainage Ditch to American River
Outfall 003	Outfall no longer proposed for use	38º, 36', 53" N	121º, 18', 10" W	Drainage Ditch to American River
Outfall 004	Treated Groundwater from GET K-A and AC-6	38º, 36', 07" N	121º, 19', 02" W	Drainage Ditch to American River
Outfall 005	Treated Groundwater from AC-23	38º, 34', 46" N	121º, 19', 42" W	Boyd Station Channel to American River
Outfall 006	Treated Groundwater from GET H-A an AC-18	38º, 32', 18" N	121º, 18', 59" W	Morrison Creek

Discharge Point	Effluent Description	Discharge Point Latitude	Discharge Point Longitude	Receiving Water
Outfall 007	Treated Groundwater from Sailor Bar Well	38º, 37', 59" N	121º, 14', 21" W	Sailor Bar Pond
Outfall 008	Treated Groundwater from Various GETs	38º, 38', 6" N	121º, 13', 13" W	American River at Natomas Stilling Basin
Outfall 009	Treated Groundwater from Various GETs	38º, 38', 12" N	121º, 12', 11" W	Alder Creek – Tributary to the American River

3. Treated groundwater is discharged from Discharges 001, 002, 005, 016 and 017 to Buffalo Creek (tributary to the American River), from Discharges 004 and 014 to Morrison Creek (tributary to the Sacramento River), from Discharges 007, 008, 009, 011, 013 and 015 to drainage channels to the American River, and from Discharge 010 to a pond in Sailor Bar Park (see table on cover page), waters of the United States and part of the Sacramento-San Joaquin Delta (Delta) within the American River and Sacramento River watersheds. Sacramento County requested during development of the previous permit to allow for the potential discharge from some or all of the GETs covered in this permit to Alder Creek, to assist in their reuse of the treated groundwater. The previous NPDES permit and this permit include a provision allowing for the discharge to Alder Creek pending completion of acceptable studies of the potential thermal and toxicity impacts on Alder Creek, Lake Natoma, the American River and the Nimbus Fish Hatchery.

D. Summary of Existing Requirements and Self-Monitoring Report (SMR) Data

Effluent limitations contained in the existing Order for discharges from GET E/F (Discharge 002, Monitoring Point M-002) and representative monitoring data from the term of the previous Order are provide in Table F-2. There were no other GET facilities with effluent violations.

Table F-2. Historic Effluent Limitations and Monitoring Data –Discharge 002

Parameter	Units	Effluent Limitation			Monitoring Data 1 Jan 2009 to 1 April 2013		
		Average Monthly	Average Weekly	Maximum Daily	Highest Average Monthly Discharge	Highest Average Weekly Discharge	Highest Daily Discharge
pH	Standard Units			6.5-8.5			7.2-8.4
TCE	µg/L			1.5			1.3
NDMA	µg/L	0.003		0.006			0.002J
perchlorate	µg/L	4		6			6.8
VOCs	µg/L	0.5		0.7			0.42J
1,2-DCA	µg/L	0.38		0.5			<0.5

Parameter	Units	Effluent Limitation			Monitoring Data 1 Jan 2009 to 1 April 2013		
		Average Monthly	Average Weekly	Maximum Daily	Highest Average Monthly Discharge	Highest Average Weekly Discharge	Highest Daily Discharge
1,4-Dioxane	µg/L	3		6			1.4J
Acetaldehyde	µg/L	5		5			22
Formaldehyde		50		50			38
copper	µg/L	11		17			6.7

E. Compliance Summary

The Discharger reported the following effluent violations from the GET E/F facility, as summarized below for the period 1 January 2009 through 31 March 2013. No other GET facilities had violations.

Date	Constituent	Reported Result	Effluent Limitation
4/7/2010	cis-1,2-DCE	0.97 µg/L	0.7 µg/L
6/17/2010*	Perchlorate	6.8 µg/L	6 µg/L
8/8/2011	Acetaldehyde	22 µg/L	5 µg/L
12/7/2011	cis-1,2-DCE	0.68	0.7 µg/L
4/11/2012	Acetaldehyde	13 µg/L	5 µg/L
9/5/2012	cis-1,2-DCE	1.2 µg/L	0.7 µg/L

F. Planned Changes

a. As stated above in Sections II(A) and II(B), in order to more easily reuse the treated groundwater, Discharge 004 may be redirected to the Boyd Station Channel for ultimate discharge to the American River. Revision of the permit will be necessary prior to taking Discharge 004 to the Boyd Station Channel. The discharges from ARGET and/or GET E/F may also be redirected to the Natomas Stilling Basin or Alder Creek. Prior to doing so, a thermal impact study, including a mixing zone study and an assessment of the potential impacts to the Nimbus fish hatchery will need to be completed that demonstrates that there are no adverse impacts with discharging to the new location(s). The permit would then be reopened and the modified to specify the changes

III. APPLICABLE PLANS, POLICIES, AND REGULATIONS

The requirements contained in this Order are based on the requirements and authorities described in this section.

A. Legal Authorities

This Order serves as WDR's pursuant to article 4, chapter 4, division 7 of the California Water Code (commencing with section 13260). This Order is also issued pursuant to section 402 of the federal Clean Water Act (CWA) and implementing regulations adopted by the U.S. EPA and chapter 5.5, division 7 of the Water Code (commencing with section 13370). It shall serve as an NPDES permit for point source discharges from these facilities to surface waters.

B. California Environmental Quality Act (CEQA)

Under Water Code section 13389, this action to adopt an NPDES permit is exempt from the provisions of Chapter 3 of CEQA, (commencing with section 21100) of Division 13 of the Public Resources Code.

C. State and Federal Laws, Regulations, Policies, and Plans

1. **Water Quality Control Plans.** Requirements of this Order specifically implement the applicable Water Quality Control Plans.

   a. **Basin Plan.** The Central Valley Water Board adopted a Water Quality Control Plan for the Water Quality Control Plan, Fourth Edition (Revised February 2007), for the Sacramento and San Joaquin River Basins (hereinafter Basin Plan) that designates beneficial uses, establishes water quality objectives, and contains implementation programs and policies to achieve those objectives for all waters addressed through the plan. Requirements in this Order implement the Basin Plan.

   The Basin Plan at II-2.00 states that the beneficial uses of any specifically identified water body generally apply to its tributary streams. The Basin Plan in Table II-1, Section II, does not specifically identify beneficial uses for Buffalo Creek The Basin Plan does not specifically identify beneficial uses for Buffalo Creek, Alder Creek or Sailor Bar Park Pond, but does identify present and potential uses for the American River, to which Buffalo Creek, Alder Creek and potentially Sailor Bar Park Pond are tributary. In addition the Basin Plan does not specifically identify beneficial uses for Morrison Creek, but does identify present and potential uses for the Sacramento River, to which Morrison Creek is tributary. These beneficial uses of the American and Sacramento Rivers are municipal and domestic supply (MUN); agricultural supply, irrigation and stock watering (AGR); water contact recreation (REC-1); non-contact water recreation (REC-2); warm freshwater habitat (WARM); cold freshwater habitat (COLD); warm and cold migration of aquatic organisms (MIGR); warm and cold spawning (SPWN); wildlife habitat (WILD). The Sacramento River has an additional designated beneficial use of navigation (NAV). In addition, State Water Resources Control Board (State Water Board) Resolution No. 88-63 requires that, with certain exceptions, the Regional Water Board assign the municipal and domestic supply use to water bodies that do not have beneficial uses listed in the Basin Plan. Thus, as discussed in detail in this Fact Sheet, beneficial uses applicable to the American River, Buffalo Creek, Alder Creek, Morrison Creek and the Sailor Bar Park Pond are as follows:

Table F-3. Basin Plan Beneficial Uses

Discharge Point	Receiving Water Name	Beneficial Use(s)
001, 002, 005, 016 and 017	Buffalo Creek and Alder Creek, Tributary of the American River	Existing: MUN, AGR, REC-1, REC-2, WARM, COLD, MIGR, SPWN, WILD.
004 and 014	Morrison Creek, Tributary of the Sacramento River	Existing: MUN, AGR, REC-1, REC-2, WARM, COLD, MIGR, SPWN, WILD.
007, 008, 009, 011, 012, 013 and 015	American River	Existing: MUN, AGR, REC-1, REC-2, WARM, COLD, MIGR, SPWN, WILD.
010	Sailor Bar Pond, Potentially tributary to American River	Existing: MUN, AGR, REC-1, REC-2, WARM, COLD, MIGR, SPWN, WILD.

b. **Thermal Plan.** The State Water Board adopted the Water Quality Control Plan for Control of Temperature in the Coastal and Interstate Waters and Enclosed Bays and Estuaries of California (Thermal Plan) on 7 January 1971, and amended this plan on 18 September 1975. This plan contains temperature objectives for surface waters. Requirements of this Order implement the Thermal Plan.

2. **National Toxics Rule (NTR) and California Toxics Rule (CTR).** This Order implements the NTR and CTR as specified in the Finding contained at Section II.H of this Order.

3. **State Implementation Policy.** This Order implements the SIP as specified in the Finding contained at Section II.I of this Order.

4. **Antidegradation Policy.** As specified in Finding contained at Section II.N of this Order and as discussed in detail in the Fact Sheet (Attachment F, Section IV.D.4), the discharge is consistent with the antidegradation portions of 40 C.F.R. section 131.12 and State Water Board Resolution 68-16.

5. **Anti-Backsliding Requirements.** This Order is consistent with anti-backsliding policies as specified in the Finding contained in Section II.M of this Order. Compliance with the anti-backsliding requirements is discussed in the Fact Sheet (Attachment F, Section IV.D.3).

6. **Storm Water Requirements.** USEPA promulgated federal regulations for storm water on 16 November 1990 in 40 CFR Parts 122, 123, and 124. The NPDES Industrial Storm Water Program does not regulate storm water discharges from groundwater treatment systems. However, the NPDES Industrial Storm Water Program does regulate discharges of storm water associated with industrial facilities. If storm water discharges associated with these Facilities are subject to applicable storm water program requirements, the Discharger is obligated to comply with Federal Regulations. Storm water at the Discharger's facility is currently regulated by Order No. R5-2008-0118.

7. **Endangered Species Act.** This Order does not authorize any act that results in the taking of a threatened or endangered species or any act that is now prohibited, or

becomes prohibited in the future, under either the California Endangered Species Act (Fish and Game Code, §§ 2050 to 2097) or the Federal Endangered Species Act (16 U.S.C.A. §§ 1531 to 1544). This Order requires compliance with effluent limits, receiving water limits, and other requirements to protect the beneficial uses of waters of the state. The discharger is responsible for meeting all requirements of the applicable Endangered Species Act.

D. Impaired Water Bodies on CWA 303(d) List

1. Under section 303(d) of the 1972 CWA, states, territories and authorized tribes are required to develop lists of water quality limited segments. The waters on these lists do not meet water quality standards, even after point sources of pollution have installed the minimum required levels of pollution control technology. On 30 November 2006 USEPA gave final approval to California's 2006 section 303(d) List of Water Quality Limited Segments. The Basin Plan references this list of Water Quality Limited Segments (WQLSs), which are defined as "…*those sections of lakes, streams, rivers or other fresh water bodies where water quality does not meet (or is not expected to meet) water quality standards even after the application of appropriate limitations for point sources* (40 CFR Part 130, et seq.)." The Basin Plan also states, "*Additional treatment beyond minimum federal standards will be imposed on dischargers to [WQLSs]. Dischargers will be assigned or allocated a maximum allowable load of critical pollutants so that water quality objectives can be met in the segment*." The listing for the American River includes mercury, PCBs and unknown toxicity. Buffalo Creek, Alder Creek and Morrison Creek do not include listings of impairments.

2. **Total Maximum Daily Loads (TMDLs).** USEPA requires the Central Valley Water Board to develop TMDLs for each 303(d) listed pollutant and water body combination. Table F-4, below, identifies the 303(d) listings and the status of each TMDL.

Table F-4. 303 (d) List for American River

Pollutant	Potential Sources	Proposed TMDL Completion
Methyl mercury	Abandoned Mines	Completed 2010
PCBs		2021
Unknown Toxicity		2021

3. The 303(d) listings and TMDLs have been considered in the development of the Order. Monitoring results supplied by the Discharger have not detected methyl mercury or PCBs in the effluent. Toxicity has also not been identified in the effluent, but has been detected in the upstream receiving water.

E. Other Plans, Polices and Regulations – Not Applicable

IV. RATIONALE FOR EFFLUENT LIMITATIONS AND DISCHARGE SPECIFICATIONS

Effluent limitations and toxic and pretreatment effluent standards established pursuant to sections 301 (Effluent Limitations), 302 (Water Quality Related Effluent Limitations), 304 (Information and Guidelines), and 307 (Toxic and Pretreatment Effluent Standards) of the CWA and amendments thereto are applicable to the discharge.

The CWA mandates the implementation of effluent limitations that are as stringent as necessary to meet water quality standards established pursuant to state or federal law [33 U.S.C., §1311(b)(1)(C); 40 CFR 122.44(d)(1)]. NPDES permits must incorporate discharge limits necessary to ensure that water quality standards are met. This requirement applies to narrative criteria as well as to criteria specifying maximum amounts of particular pollutants. Pursuant to federal regulations, 40 CFR 122.44(d)(1)(i), NPDES permits must contain limits that control all pollutants that "are or may be discharged at a level which will cause, have the reasonable potential to cause, or contribute to an excursion above any state water quality standard, including state narrative criteria for water quality." Federal regulations, 40 CFR 122.44(d)(1)(vi), further provide that "[w]here a state has not established a water quality criterion for a specific chemical pollutant that is present in an effluent at a concentration that causes, has the reasonable potential to cause, or contributes to an excursion above a narrative criterion within an applicable State water quality standard, the permitting authority must establish effluent limits."

The CWA requires point source dischargers to control the amount of conventional, non-conventional, and toxic pollutants that are discharged into the waters of the United States. The control of pollutants discharged is established through effluent limitations and other requirements in NPDES permits. There are two principal bases for effluent limitations in the Code of Federal Regulations: 40 CFR 122.44(a) requires that permits include applicable technology-based limitations and standards; and 40 CFR 122.44(d) requires that permits include WQBELs to attain and maintain applicable numeric and narrative water quality criteria to protect the beneficial uses of the receiving water where numeric water quality objectives have not been established. The Basin Plan at page IV-17.00, contains an implementation policy, "Policy for Application of Water Quality Objectives", that specifies that the Central Valley Water Board "will, on a case-by-case basis, adopt numerical limitations in orders which will implement the narrative objectives." This Policy complies with 40 CFR 122.44(d)(1). With respect to narrative objectives, the Central Valley Water Board must establish effluent limitations using one or more of three specified sources, including: (1) USEPA's published water quality criteria, (2) a proposed state criterion (i.e., water quality objective) or an explicit state policy interpreting its narrative water quality criteria (i.e., the Central Valley Water Board's "Policy for Application of Water Quality Objectives")(40 CFR 122.44(d)(1)(vi)(A), (B) or (C)), or (3) an indicator parameter.

The Basin Plan includes numeric site-specific water quality objectives and narrative objectives for toxicity, chemical constituents, discoloration, radionuclides, and tastes and odors. The narrative toxicity objective states: "All waters shall be maintained free of toxic substances in concentrations that produce detrimental physiological responses in human, plant, animal, or aquatic life." (Basin Plan at III-8.00) The Basin Plan states that material and relevant information, including numeric criteria, and recommendations from other agencies and scientific literature will be utilized in evaluating compliance with the narrative toxicity objective. The narrative chemical constituents objective states that waters shall not contain chemical constituents in concentrations that adversely affect beneficial uses. At minimum, "…water designated for use as domestic or municipal supply (MUN) shall not contain concentrations of chemical constituents in excess of the maximum contaminant levels (MCLs)" in Title 22 of CCR. The Basin Plan further states that, to protect all beneficial uses, the Central Valley Water Board may apply limits more stringent than MCLs. The narrative tastes and odors objective states: "Water shall not contain taste- or odor-

producing substances in concentrations that impart undesirable tastes or odors to domestic or municipal water supplies or to fish flesh or other edible products of aquatic origin, or that cause nuisance, or otherwise adversely affect beneficial uses."

A. Discharge Prohibitions

1. **Prohibition III.A (No discharge or application of waste other than that described in this Order).** This prohibition is based on Water Code section 13260 that requires filing of a report of waste discharge (ROWD) before discharges can occur. The Discharger submitted a ROWD for the discharges described in this Order; therefore, discharges not described in this Order are prohibited.

2. **Prohibition III.B (No bypasses or overflow of untreated wastewater, except under the conditions at CFR Part 122.41(m)(4)).** As stated in section I.G of Attachment D, Standard Provisions, this Order prohibits bypass from any portion of the treatment facility. Federal regulations, 40 CFR 122.41(m), define "bypass" as the intentional diversion of waste streams from any portion of a treatment facility. This section of the federal regulations, 40 CFR 122.41(m)(4), prohibits bypass unless it is unavoidable to prevent loss of life, personal injury, or severe property damage. In considering the Regional Water Board's prohibition of bypasses, the State Water Board adopted a precedential decision, Order No. WQO 2002-0015, which cites the federal regulations, 40 CFR 122.41(m), as allowing bypass only for essential maintenance to assure efficient operation.

3. **Prohibition III.C (No controllable condition shall create a nuisance).** This prohibition is based on Water Code section 13050 that requires water quality objectives established for the prevention of nuisance within a specific area. The Basin Plan prohibits conditions that create a nuisance

4. **Prohibition III.D (No inclusion of pollutant free wastewater shall cause improper operation of the Facility's systems).** This prohibition is based on CFR Part 122.41 et seq. that requires the proper design and operation of treatment facilities.

5. Discharge of wastewater to Outfall 008 and 009 is prohibited until approved by the Executive Officer. Completion of an adequate assessment of the thermal impacts, including a dilution study in Alder Creek/Lake Natoma, and potential impacts on the Natomas Fish Hatchery associated with those discharges at those two outfalls is required before consideration of approval by the Executive Officer.

B. Technology-Based Effluent Limitations

1. Scope and Authority

Section 301(b) of the CWA and implementing U.S. EPA permit regulations at 40 C.F.R. section 122.44 require that permits include conditions meeting applicable technology-based requirements at a minimum, and any more stringent effluent limitations necessary to meet applicable water quality standards. The discharge authorized by this Order must meet minimum federal technology-based requirements based on Best Professional Judgment (BPJ) in accordance with 40 C.F.R. section 125.3.

The CWA requires that technology-based effluent limitations be established based on several levels of controls:

a. Best practicable treatment control technology (BPT) represents the average of the best existing performance by well-operated facilities within an industrial category or subcategory. BPT standards apply to toxic, conventional, and non-conventional pollutants.

b. Best available technology economically achievable (BAT) represents the best existing performance of treatment technologies that are economically achievable within an industrial point source category. BAT standards apply to toxic and non-conventional pollutants.

c. Best conventional pollutant control technology (BCT) represents the control from existing industrial point sources of conventional pollutants including BOD, TSS, fecal coliform, pH, and oil and grease. The BCT standard is established after considering a two-part reasonableness test. The first test compares the relationship between the costs of attaining a reduction in effluent discharge and the resulting benefits. The second test examines the cost and level of reduction of pollutants from the discharge from publicly owned treatment works to the cost and level of reduction of such pollutants from a class or category of industrial sources. Effluent limitations must be reasonable under both tests.

d. New source performance standards (NSPS) represent the best available demonstrated control technology standards. The intent of NSPS guidelines is to set limitations that represent state-of-the-art treatment technology for new sources.

The CWA requires U.S. EPA to develop effluent limitations, guidelines and standards (ELGs) representing application of BPT, BAT, BCT, and NSPS. Section 402(a)(1) of the CWA and 40 C.F.R. section 125.3 authorize the use of best professional judgment (BPJ) to derive technology-based effluent limitations on a case-by-case basis where ELGs are not available for certain industrial categories and/or pollutants of concern. Where BPJ is used, the Central Valley Water Board must consider specific factors outlined in 40 C.F.R. section 125.3.

2. Applicable Technology-Based Effluent Limitations

a. Flow. A technology-based effluent limitation for flow is established in this Order to monitor the performance of the groundwater treatment systems from the standpoint of volumes being treated. The maximum daily flow rates in previous Order R5-2011-0088 were based on the designed flows and are retained in this Order. This Order contains a maximum daily and long term average effluent limitations of 5.04 mgd for ARGET, 11.52 mgd for GET E/F, 2.88 mgd for GET HA, 1.08 mgd for Chettenham, 6.75 mgd for GET J, 4.03 mgd for GET KA, 2.88 mgd, 1.56 for GET LA, 1.73 mgd for GET LB, 5.76 mgd for GET AB, 1.3 mgd for White Rock GET, 0.58 mgd for Sailor Bar Park Well, 1.08 mgd for AC-6, 2.59 mgd for AC-18, 1.15 mgd for Well 4665 and 3.17 mgd for AC- 23 based on the maximum daily effluent flows reported in Aerojet's RWD. In accordance with 40 CFR Section 122.45, this Order includes mass effluent limitations based on the long term average effluent flows listed above and reported in the Discharger's RWD.

b. Perchlorate. The monthly average effluent limitation for perchlorate is established at 4 µg/L, a value that the Discharger, utilizing commercially available technology at GET E/F, ARGET, GET AB, GET HA, GET J and AC-6, has shown to be capable of technically and economically meeting on a consistent basis. As discussed below in Section IV.C.3, the water quality based effluent limitation is 6 µg/L. Therefore,

systems for perchlorate removal are not added until the perchlorate concentration in the influent is 6 µg/L or greater. Once the treatment system is added, the effluent limitation is 4 µg/L. This possibility is only applicable to Golden State wells AC-18 and AC-23 at this time.

c. **Volatile Organics (VOCs).** The effluent limits for VOCs are based on Best Available Technology utilizing either air stripping or carbon adsorption which have been demonstrated to readily reduce VOCs to below 0.5 µg/L. The 0.5 µg/L effluent limitation is below the Water Quality Based Effluent Limits (WQBEL) calculated below for VOCs of concern, with the exception of 1,2-Dichloroethane. The WQBEL will be used for 1,2-Dichloroethane. Carbon adsorption and ultraviolet light are not entirely effective on the removal of chloroform at low concentrations. GETs J, HA, AC-6 and Well 4665 havelow concentrations of chloroform (1 µg/L for GET J, AC-6 and Well 4665, 0.55 for GET HA). Removal of chloroform by GAC is expensive. As an example, relying on removal to 0.5 µg/L by carbon, increases the cost of operating GET J by over $500,000 per year. The effluent limit for chloroform for GET J is set at 3 µg/L which will meet the WQBEL for chloroform of 1.1 µg/L in Buffalo Creek as it mixes with the effluents from GETs E/F and ARGET. The effluent limit for chloroform for AC-6 is also 3 µg/L as it will mix with the effluent from GET KA in the drainage channel to the American River. The effluent from GET HA is set at 2 µg/L as it mixes with the effluent from GET HB in the drainage channel to Morrison Creek. The effluent limitation for TCE for GET E/F was modified in Order No. R5-2009-0016 to 1.5 µg/L based on the treatment systems in use at that facility. Utilizing the best available technologies for perchlorate, NDMA and VOCs at the GET E/F facility hinders the ability to consistently remove the TCE and cis-1,2-DCE to 0.5 µg/L due to the presence of very low concentrations of suspended solids from the perchlorate removal system. The concentration within the receiving water and discharge remain below the Water Quality Objective for TCE of 1.7 µg/L and 6 µg/L for cis-1,2-DCE. The proposed effluent limitations are consistent with those found in the existing Order.

d. **N-nitrosodimethylamine (NDMA).** Under a previous permit, the Discharger performed a study on the technical and economic implications of treating NDMA at GET J to 0.002 µg/L, the effluent limitation found in a previous version of the permit. An interim effluent limit of 0.01 µg/L was established and the studies undertaken. The studies showed that there is a significant reduction in treatment efficiency below a concentration of 0.01 µg/L, and even less efficiency below 0.007 µg/L. It was estimated that there would be approximately $50 million in increased costs (30-year net present worth) to reduce the effluent from 0.010 µg/l to 0.002 µg/L, assuming power cost per kilowatt/hour remained constant. The Discharger's study concluded that treating to 0.007 µg/L was both technically achievable and cost-effective for GET J and future GETs using the low-watt UV technology to remove NDMA from groundwater. Using an effluent limitation of 0.007 µg/L for GET J and the available dilution in Buffalo Creek provided by flows from GET E/F and ARGET, the WQBEL of 0.003 µg/L will be met in Buffalo Creek. Future discharges at Discharge Points 007, 008, and 009 will discharge directly to the American River with a minimum dilution of 50:1. A technology-based effluent limitation of 0.007 µg/l will meet the WQO in the American River.

Summary of Technology-based Effluent Limitations
Discharge Point Nos. 001, 002, 004, 005, 007, 008, 009, 010, 011, 013, 014, 015, 016, 017 and 018

Table F-5. Summary of Technology-based Effluent Limitations

Parameter	Units	Effluent Limitations				
		Average Monthly	Average Weekly	Maximum Daily	Instantaneous Minimum	Instantaneous Maximum
ARGET Flow	mgd	5.04	--	5.04	--	--
GET E/F Flow	mgd	11.52		11.52		
GET H-A	mgd	3.46		3.46		
GET J Flow	mgd	6.75		6.75		
GET K-A Flow	mgd	4.03		4.03		
GET L-A	mgd	2.88		2.88		
GET L-B Flow	mgd	1.44		1.44		
Sailor Bar Park Well Flow	mgd	0.58		0.58		
GET AB	mgd	5.76		5.76		
White Rock GET	mgd	1.3		1.3		
Golden State AC-6 Flow	mgd	1.08		1.08		
Golden State AC-18 Flow	mgd	2.59		2.59		
Golden State AC-23 Flow	mgd	3.17		3.17		
Well 4665	mgd	1.15		1.15		
VOCs[1]	µg/L	0.5		0.75		
Perchlorate	µg/L	4.0		6.0		
N-nitrosodimethylamine	µg/L	0.002		0.005		
N-nitrosodimethylamine –Discharges GET J, GET KA, GET LA, GET LB, Well 4665	µg/L	0.007		0.010		
chloroform – GET HA, GET J, AC-6 and Well 4665	µg/L	2, 3.0[1]		4, 5.0[1]		

1 1,2-dichloroethane has a WQBEL, listed below, that is more stringent than the 0.5 µg/L listed on this table. GET E/F has an effluent limit of 1.5 for TCE and cis-1,2-DCE. Chloroform has an effluent limit of 3 µg/L for GET J, AC-6 and Well 4665 and a limit of 2 µg/L for GET HA. The effluent limit for TCE for Well 4665 is set at 3 µg/L.

C. Water Quality-Based Effluent Limitations (WQBELs)

1. Scope and Authority

CWA Section 301(b) and 40 C.F.R. section 122.44(d) require that permits include limitations more stringent than applicable federal technology-based requirements where

necessary to achieve applicable water quality standards. This Order contains requirements, expressed as a technology equivalence requirement, more stringent than secondary treatment requirements that are necessary to meet applicable water quality standards.

Section 122.44(d)(1)(i) of 40 C.F.R. requires that permits include effluent limitations for all pollutants that are or may be discharged at levels that have the reasonable potential to cause or contribute to an exceedance of a water quality standard, including numeric and narrative objectives within a standard. Where reasonable potential has been established for a pollutant, but there is no numeric criterion or objective for the pollutant, water quality-based effluent limitations (WQBELs) must be established using: (1) U.S. EPA criteria guidance under CWA section 304(a), supplemented where necessary by other relevant information; (2) an indicator parameter for the pollutant of concern; or (3) a calculated numeric water quality criterion, such as a proposed state criterion or policy interpreting the state's narrative criterion, supplemented with other relevant information, as provided in section 122.44(d)(1)(vi).

The process for determining reasonable potential and calculating WQBELs when necessary is intended to protect the designated uses of the receiving water as specified in the Basin Plan, and achieve applicable water quality objectives and criteria that are contained in other state plans and policies, or any applicable water quality criteria contained in the CTR and NTR.

2. Applicable Beneficial Uses and Water Quality Criteria and Objectives

The Basin Plan designates beneficial uses, establishes water quality objectives, and contains implementation programs and policies to achieve those objectives for all waters addressed through the plan. In addition, the Basin Plan implements State Water Board Resolution No. 88-63, which established state policy that all waters, with certain exceptions, should be considered suitable or potentially suitable for municipal or domestic supply.

The Basin Plan on page II-1.00 states: "*Protection and enhancement of existing and potential beneficial uses are primary goals of water quality planning…*" and with respect to disposal of wastewaters states that "...*disposal of wastewaters is [not] a prohibited use of waters of the State; it is merely a use which cannot be satisfied to the detriment of beneficial uses.*"

The federal CWA section 101(a)(2), states: "it is the national goal that wherever attainable, an interim goal of water quality which provides for the protection and propagation of fish, shellfish, and wildlife, and for recreation in and on the water be achieved by July 1, 1983." Federal Regulations, developed to implement the requirements of the CWA, create a rebuttable presumption that all waters be designated as fishable and swimmable. Federal Regulations, 40 CFR sections 131.2 and 131.10, require that all waters of the State regulated to protect the beneficial uses of public water supply, protection and propagation of fish, shell fish and wildlife, recreation in and on the water, agricultural, industrial and other purposes including navigation. Section 131.3(e), 40 CFR, defines existing beneficial uses as those uses actually attained after 28 November 1975, whether or not they are included in the water quality standards. Federal Regulation, 40 CFR section 131.10 requires that uses be obtained by implementing effluent limitations, requires that all downstream uses be protected and

states that in no case shall a state adopt waste transport or waste assimilation as a beneficial use for any waters of the United States.

a. **Receiving Water and Beneficial Uses.** Buffalo Creek originates on the eastern side of the facility, meandering westward to an area near the intersection of the Folsom South Canal and US 50. At that point, Buffalo Creek is routed into the East and West Retention Basins and Ponds 1 and 2. In those impoundments, the water from Buffalo Creek mixes with that from the Administration Ditch. The impounded water is stored for evaporation percolation. Flows occur in Buffalo Creek upstream of the impoundments only during the winter time and are associated with rainfall runoff, and return of infiltrated rainfall to the streambed. With the addition of periodic discharges from GETAB and White Rock GET there could be up to 4900 gpm in Buffalo Creek upstream of the discharge of ARGET to Buffalo Creek. Just downstream of the impoundments, there is a year-found flow in Buffalo Creek associated with the discharge from ARGET and GET E/F. Those plants discharge up to 9000 gpm of treated groundwater under an NPDES permit. Buffalo Creek meanders for approximately 2.5 miles through commercial and residential areas prior to joining the American River at the Sunrise Boulevard overcrossing. See section III.C.1,above for a complete description of the receiving water and beneficial uses.

b. **Effluent and Ambient Background Data.** The reasonable potential analysis (RPA), as described in section IV.C.3 of this Fact Sheet, was based on data from April 2008 through April 2013, which includes effluent and ambient background data submitted in SMRs, the Report of Waste Discharge (ROWD), and the database supplied by the Discharger. Additional data outside of this range was also analyzed where there was inadequate data to perform an analysis. As an example, sampling was conducted prior to the last version of the permit to ascertain which constituents might be present in the influent and effluent.

c. **Assimilative Capacity/Mixing Zone.**

The Regional Board finds that based on the available information that three of the receiving waters, Buffalo Creek, Morrison Creek and Alder Creek, that these three creeks, absent the discharges, are ephemeral streams, or at times the flow upstream of the discharges is significantly less than that of the discharge. The ephemeral and/or low flow nature of the creeks means that the designated beneficial uses must be protected, but that no credit for receiving water dilution is available. However, there is dilution available on Buffalo Creek at Discharge Point 005 due to the flow from upstream Discharges 001 and 002 and periodic discharges from 016 and 017. As the discharge, at times, maintains the aquatic habitat, constituents may not be discharged that may cause harm to aquatic life. At other times, natural flows within the creeks help support the aquatic life. Dry conditions occur primarily in the summer months, but dry conditions may also occur throughout the year, particularly in low rainfall years. The lack of dilution results in more stringent effluent limitations to protect contact recreational uses, drinking water standards, agricultural water quality goals and aquatic life. Therefore, the Regional Water Board has evaluated the need for water quality-based effluent limitations for pollutants without benefit of dilution in this Order. These water quality-based effluent limitations are based on the application of water quality criteria or objectives at the points of discharge.

d. **Conversion Factors.** The CTR contains aquatic life criteria for arsenic, cadmium, chromium III, chromium VI, copper, lead, nickel, silver, and zinc which are presented in dissolved concentrations. USEPA recommends conversion factors to translate dissolved concentrations to total concentrations. The default USEPA conversion factors contained in Appendix 3 of the SIP were used to convert the applicable dissolved criteria to total recoverable criteria.

e. **Hardness-Dependent CTR Metals Criteria.** The *California Toxics Rule* and the *National Toxics Rule* contain water quality criteria for seven metals that vary as a function of hardness. The lower the hardness the lower the water quality criteria. The metals with hardness-dependent criteria include cadmium, copper, chromium III, lead, nickel, silver, and zinc.

This Order has established the criteria for hardness-dependent metals based on the reasonable worst-case ambient hardness as required by the SIP[1], the CTR[2] and State Water Board Order No. WQO 2008-0008 (City of Davis). The SIP and the CTR require the use of "receiving water" or "actual ambient" hardness, respectively, to determine effluent limitations for these metals. (SIP, § 1.2; 40 CFR § 131.38(c)(4)) The CTR does not define whether the term "ambient," as applied in the regulations, necessarily requires the consideration of upstream as opposed to downstream hardness conditions. Therefore, where reliable, representative data are available, the hardness value for calculating criteria can be the downstream receiving water hardness, after mixing with the effluent (Order WQO 2008-0008, p. 11). The Central Valley Water Board thus has considerable discretion in determining ambient hardness (*Id.*, p.10).

As discussed below, scientific literature provides a reliable method for calculating protective hardness-dependent CTR criteria, considering all discharge conditions. This methodology produces hardness-dependent CTR criteria based on the reasonable worst-case downstream ambient hardness that ensure these metals do not cause receiving water toxicity under any downstream receiving water condition. Under this methodology, the Central Valley Water Board considers all hardness conditions that could occur in the ambient downstream receiving water after the effluent has mixed with the water body[3]. This ensures that effluent limitations are fully protective of aquatic life in all areas of the receiving water affected by the discharge under all flow conditions, at the fully mixed location, and throughout the water body including at the point of discharge into the water body.

i. **Conducting the Reasonable Potential Analysis (RPA).** The SIP in Section 1.3 states, "The RWQCB shall…determine whether a discharge may: (1) cause, (2) have a reasonable potential to cause, or (3) contribute to an excursion above any applicable priority pollutant criterion or objective." Section 1.3 provides a step-

[1] The SIP does not address how to determine the hardness for application to the equations for the protection of aquatic life when using hardness-dependent metals criteria. It simply states, in Section 1.2, that the criteria shall be properly adjusted for hardness using the hardness of the receiving water.

[2] The CTR requires that, for waters with a hardness of 400 mg/L (as $CaCO_3$), or less, the actual ambient hardness of the surface water must be used. It further requires that the hardness values used must be consistent with the design discharge conditions for design flows and mixing zones.

[3] All effluent discharges will change the ambient downstream metals concentration and hardness. It is not possible to change the metals concentration without also changing the hardness.

by-step procedure for conducting the RPA. The procedure requires the comparison of the Maximum Effluent Concentration (MEC) and Maximum Ambient Background Concentration to the applicable criterion that has been properly adjusted for hardness. Unless otherwise noted, for the hardness-dependent CTR metals criteria the following procedures were followed for properly adjusting the criterion for hardness when conducting the RPA.

a) The SIP requires water quality-based effluent limitations (WQBELs) if the MEC is equal to or exceeds the applicable criterion, adjusted for hardness. For comparing the MEC to the applicable criterion, the "fully mixed" reasonable worst-case downstream ambient hardness was used to adjust the criterion. In this evaluation the portion of the receiving water affected by the discharge is analyzed. For hardness-dependent criteria, the hardness of the effluent has an impact on the determination of the applicable criterion in areas of the receiving water affected by the discharge. Therefore, for comparing the MEC to the applicable criterion, the reasonable worst-case downstream ambient hardness was used to adjust the criterion. For this situation it is necessary to consider the hardness of the effluent in determining the applicable hardness to adjust the criterion. The procedures for determining the applicable criterion after proper adjustment using the reasonable worst-case downstream ambient hardness is outlined in subsection ii, below.

b) The SIP requires WQBELs if the receiving water is impaired upstream (outside the influence) of the discharge, i.e., if the Maximum Ambient Background Concentration of a pollutant exceeds the applicable criterion, adjusted for hardness[1]. For comparing the Maximum Ambient Background Concentration to the applicable criterion, the reasonable worst-case upstream ambient hardness was used to adjust the criteria. This is appropriate, because this area is outside the influence of the discharge. Since the discharge does not impact the upstream hardness, the effect of the effluent hardness was not included in this evaluation.

ii. **Calculating Water Quality-Based Effluent Limitations.** The remaining discussion in this section relates to the development of WQBELs when it has been determined that the discharge has reasonable potential to cause or contribute to an exceedance of the CTR hardness-dependent metals criteria in the receiving water.

A 2006 Study[2] developed procedures for calculating the effluent concentration allowance (ECA)[3] for CTR hardness-dependent metals. The 2006 Study demonstrated that it is necessary to evaluate all discharge conditions (e.g. high and low flow conditions) and the hardness and metals concentrations of the effluent and receiving water when determining the appropriate ECA for these

[1] The pollutant must also be detected in the effluent.
[2] Emerick, R.W.; Borroum, Y.; & Pedri, J.E., 2006. California and National Toxics Rule Implementation and Development of Protective Hardness Based Metal Effluent Limitations. WEFTEC, Chicago, Ill.
[3] The ECA is defined in Appendix 1 of the SIP (page Appendix 1-2). The ECA is used to calculate WQBELs in accordance with Section 1.4 of the SIP.

hardness-dependent metals. This method is superior to relying on downstream receiving water samples alone because it captures all possible mixed conditions in the receiving water. Both receiving water and effluent hardness vary based on flow and other factors, but the variability of receiving water and effluent hardness is sometimes independent. Using a calculated hardness value ensures that the Central Valley Water Board considers all possible mixed downstream values that may result from these two independent variables. Relying on receiving water sampling alone is less likely to capture all possible mixed downstream conditions.

The equation describing the total recoverable regulatory criterion, as established in the CTR[1], is as follows:

$$\text{CTR Criterion} = \text{WER} \times (e^{m[\ln(H)]+b}) \qquad \text{(Equation 1)}$$

Where:

H = hardness (as $CaCO_3$)[2]
WER = water-effect ratio
m, b = metal- and criterion-specific constants

In accordance with the CTR, the default value for the WER is 1. A WER study must be conducted to use a value other than 1. The constants “m” and “b” are specific to both the metal under consideration, and the type of total recoverable criterion (i.e., acute or chronic). The metal-specific values for these constants are provided in the CTR at paragraph (b)(2), Table 1.

The equation for the ECA is defined in Section 1.4, Step 2, of the SIP and is as follows:

$$\text{ECA} = C \qquad (\text{when } C \leq B)^{3} \qquad \text{(Equation 2)}$$

Where:

C = the priority pollutant criterion/objective, adjusted for hardness (see Equation 1, above)

B = the ambient background concentration

The 2006 Study demonstrated that the relationship between hardness and the calculated criteria is the same for some metals, so the same procedure for calculating the ECA may be used for these metals. The same procedure can be used for chronic cadmium, chromium III, copper, nickel, and zinc. These metals are hereinafter referred to as “Concave Down Metals”. “Concave Down” refers to the shape of the curve represented by the relationship between hardness and the CTR criteria in Equation 1. Another similar procedure can be used for

[1] 40 CFR § 131.38(b)(2).
[2] For this discussion, all hardness values are in mg/L as $CaCO_3$.
[3] The 2006 Study assumes the ambient background metals concentration is equal to the CTR criterion (i.e. C ≤ B)

determining the ECA for acute cadmium, lead, and acute silver, which are referred to hereafter as "Concave Up Metals".

ECA for Chronic Cadmium, Chromium III, Copper, Nickel, and Zinc – For Concave Down Metals (i.e., chronic cadmium, chromium III, copper, nickel, and zinc) the 2006 Study demonstrates that when the effluent is in compliance with the CTR criteria and the upstream receiving water is in compliance with the CTR criteria, any mixture of the effluent and receiving water will always be in compliance with the CTR criteria[1]. The 2006 Study proves that regardless of whether the effluent hardness is lower or greater than the upstream hardness, the reasonable worst-case flow condition is the effluent dominated condition (i.e., no receiving water flow)[2]. Consequently, for Concave Down Metals, the CTR criteria have been calculated using the downstream ambient hardness under this condition.

As Buffalo Creek and Morrison Creek are ephemeral streams are would generally be dry except for the discharge and/or storm water runoff, the effluent must meet the Water Quality Objective. Therefore, only the effluent hardness and contaminant concentration are used in calculating the ECA.

The effluent hardness ranged from 82 mg/L to 100 mg/L, based on 87 samples from January 1999 to January 2013. Under the effluent dominated condition, the reasonable worst-case downstream ambient hardness is 82 mg/L. Using this hardness to calculate the ECA for all Concave Down Metals will result in WQBELs that are protective under all flow conditions.

ECA for Acute Cadmium, Lead, and Acute Silver – For Concave Up Metals (i.e., acute cadmium, lead, and acute silver), the relationship between hardness and the metals criteria is different than for Concave Down Metals. The 2006 Study demonstrates that for Concave Up Metals, the effluent and upstream receiving water can be in compliance with the CTR criteria, but the resulting mixture may contain metals concentrations that exceed the CTR criteria and could cause toxicity. For these metals, the 2006 Study provides a mathematical approach to calculate the ECA that is protective of aquatic life, in all areas of the receiving water affected by the discharge, under all discharge and receiving water flow conditions (see Equation 4, below). As for the Concave Down Metals, the flow in the stream is essentially the effluent from the treatment facility and therefore using a hardness of 82 mg/L will result in WQBELs that are protective under all flow conditions.

Based on the procedures discussed above, Table F-6 lists all the CTR hardness-dependent metals and the associated ECA used in this Order.

[1] 2006 Study, p. 5700

[2] There are two typographical errors in the 2006 Study in the discussion of Concave Down Metals when the effluent hardness is less than the receiving water hardness. The effluent and receiving water hardness were transposed in the discussion, but the correct hardness values were used in the calculations. The typographical errors were confirmed by the author of the 2006 Study, by email dated 1 April 2011, from Dr. Robert Emerick to Mr. James Marshall, Central Valley Water Board.

Table F-6. Summary of ECA Evaluations for CTR Hardness-dependent Metals

CTR Metals	ECA (µg/L, total recoverable)	
	acute	chronic
Copper	7.7	11
Chromium III	170	1400
Cadmium	2.1	3.5
Lead	2.4	61
Nickel	43	390
Silver	2.8	2.8
Zinc	99	97

3. Determining the Need for WQBELs

a. The Central Valley Water Board conducted the reasonable potential analysis (RPA) according to section 1.3 of the SIP. Although the SIP applies directly to the control of CTR priority pollutants, the State Water Board has held that the Regional Water Boards may use the SIP as guidance for water quality-based toxics control. The SIP states in the introduction *"The goal of this Policy is to establish a standardized approach to permitting discharges of toxic pollutants to non-ocean surface waters in a manner that promotes statewide consistency."* Therefore, in this Order, unless otherwise specified, the RPA procedures from the SIP were used to evaluate reasonable potential for bouth CTR and non-CTR constituents based on information as part of the application, in studies, and as directed by monitoring and reporting programs.

b. **Constituents with No Reasonable Potential.** WQBELs are not included in this Order for constituents that do not demonstrate reasonable potential (i.e. constituents were not detected in the effluent or receiving water); however, monitoring for those pollutants is established in this Order as required by the SIP. If the results of effluent monitoring demonstrate reasonable potential, this Order may be reopened and modified by adding an appropriate effluent limitation.

   Most constituents with no reasonable potential are not discussed in this Order.

c. **Constituents with Reasonable Potential.** The Central Valley Water Board finds that the discharge has a reasonable potential to cause or contribute to an in-stream excursion above a water quality standard for perchlorate, NDMA, and acetaldehyde. WQBELs for these constituents are included in this Order. A summary of the RPA is provided in Attachment G, and a detailed discussion of the RPA for each constituent is provided below.

Table F-7 – Summary of Reasonable Potential Analyses

Parameter	Units	MEC[1]	99th MEC[1]	WQO/ WQC[2]	Source	RP[3]
Perchlorate	µg/L	6.8	6.8	6	California Primary MCL	Y
NDMA	µg/L	0.0024	0.0024	0.003	CTR HH	Y
Acetaldehyde	µg/L	29	29	2.2	USEPA IRIS	Y
Copper	µg/L	6.3	6.3	7.7/11	CTR CCC/CMC	N
Mercury	µg/L	0.001	0.001	0.05	CTR HH	N
Nickel	µg/L	13	13	43/390	CTR CCC/CMC	N
Zinc	µg/L	42	42	99	CTR CCC/CMC	N
Barium	µg/L	90	124	1000	California Primary MCL	N
Iron	µg/L	55	75	300	California Secondary MCL	N
Manganese	µg/L	<5	23	50	California Secondary MCL	N
Chloride	mg/L	13	39	106	Water Quality for Agriculture	N
Nitrate	mg/L	0.8	4	10	California Primary MCL	N
Sulfate	mg/L	12	60	250	California Secondary MCL	N
Electrical Conductivity	µmhos/cm	210	230	700	Water Quality for Agriculture	N
Total Dissolved Solids	mg/L	220	260	450	Water Quality for Agriculture	N

1 Maximum Effluent Concentration
2 Water Quality Objective/Water Quality Criterion
3 Reasonable Potential

i. **N-nitrosodimethylamine**

a. **WQO.** NDMA is believed to be a human carcinogen at very low concentrations. The estimated incremental $1x10^{-6}$ excess cancer risk value (Public Health Goal) established by the Office of Environmental Health Hazard Assessment for the State of California for this pollutant is 0.003 µg/L. Barring any dilution within the receiving water, this value is used as the effluent limitation.

b. **RPA Results.** The maximum effluent concentration (MEC) for NDMA for GET E/F was an estimated 0.0024 µg/L and for GET J was 0.0068 µg/L. NDMA was not detected upstream or downstream on Buffalo Creek, the receiving water for these two effluents. As the effluents generally comprise the flow of the stream during most of the year. The discharges have a reasonable potential to cause an in-stream excursion above the WQO.

c. **WQBELs.** Due to no assimilative capacity, dilution credits are not allowed for development of the WQBELs for NDMA. However, for GET J, there is mixing with the effluents from GET E/F and ARGET. Therefore, this Order contains a final average monthly effluent limitation (AMEL) for NDMA of 0.002 µg/L for GET E/F which has been achievable at GET E/F and is lower than the Public Health Goal of 0.003 µg/L.

d. **Plant Performance and Attainability.** Analysis of the effluent data shows that the MEC of 0.0024 µg/L for GET E/F is less than the applicable WQBELs. For GET J the effluent limitation of 0.007 µg/L (technology based effluent limit) is sufficient to meet the WQO for NDMA in Buffalo Creek after mixing with the effluents from upstream discharges from GET E/F and ARGET (no NDMA) can achieve the WQO in-stream. The average NDMA concentration in the GET J effluent over the past 5 years is 0.0015 µg/L. The Central Valley Water Board concludes, therefore, that immediate compliance with these effluent limitations is feasible. For White Rock GET and GET AB the effluent limitation is set at 0.002 µg/L, below the WQO. The other GET facilities that treat for NDMA discharge to drainage channels to the American River where there would be a minimum of 50:1 dilution and the technology based-effluent limit of 0.007 µg/L is sufficient and a WQBEL is not needed for the other discharges.

ii. **Acetaldehyde**

a. **WQO**. Acetaldehyde is designated as a probable human carcinogen by USEPA with an estimated incremental $1x10^{-6}$ excess cancer risk level in drinking water of 2.2 µg/L. Barring any dilution in the receiving water, this value is used as the WQO.

b. **RPA Results.** The maximum effluent concentration (MEC) for acetaldehyde at GET E/F was 29 µg/L. Acetaldehyde is formed in the treatment process when excess alcohol in the effluent from the fluidized bed reactors is subjected to the UV/peroxide treatment system for the removal of NDMA and VOCs. The detection limit for analysis of acetaldehyde is 5 µg/L. As the effluent from GET E/F mixes with the effluents from GET J and ARGET, that do not contain acetaldehyde there is some dilution that is available from those additional effluents. Even with this dilution there is a potential for concentrations in Buffalo Creek to exceed the WQO.

c. **WQBELs.** Due to no assimilative capacity, dilution credits are not allowed for development of the WQBELs for NDMA. However, for GET E/F, there is mixing with the effluents from ARGET and GET J. There is not sufficient dilution provided by these effluents to reduce the concentration below the WQO. The detection limit of acetaldehyde is 5 µg/L, which also exceeds the WQO. Therefore, this Order contains a final average monthly effluent limitation (AMEL) and maximum daily effluent limitation (MDEL) for acetaldehyde of 5 µg/L based on the USEPA estimated incremental $1x10^{-6}$ cancer risk level for drinking waters of 5 µg/L.

d. **Plant Performance and Attainability.** Analysis of the effluent data shows that the MEC of 29 µg/L is greater than the than the applicable WQBEL. This exceedance only occurred six times time during the last five years. Upon mixing with ARGET and GET J effluents in Buffalo Creek the in-stream value would be still be greater than the WQO. The Discharger is expanding the capacity of GET E/F in a manner in which the higher concentrations of perchlorate will still be processed through the FBRs, but lower concentrations will be treated by ion exchange. This will reduce the amount of alcohol used

and add additional flow with no potential to form acetaldehyde. These changes are projected to reduce the potential for the discharge to exceed the effluent limit.

iii. **Perchlorate**

a. **WQO.** Perchlorate has been determined to have a potential adverse impact on the thyroid. The California Department of Public Health has adopted a Maximum Contaminant Level for perchlorate of 6 µg/L and the California Department of Health Hazard Assessment has adopted the same value as the Public Health Goal. Concentrations below 6 µg/L would pose a *de minimus* risk to human health.

b. **RPA Results.** Analysis of the effluent data shows that the MEC of 6.8 µg/L is greater than the applicable WQBEL for GET E/F. The exceedance was one of three times in the past five years that the concentration in the GET E/F effluent exceeded 6 µg/L. The other GET facilities have been in compliance with the WQO as an effluent limitation.

c. **WQBELs.** Due to no assimilative capacity, dilution credits are not allowed for development of the WQBELs for perchlorate at GET E/F. Therefore, this Order contains a final average monthly effluent limitation (AMEL) and maximum daily effluent limitation (MDEL) for perchlorate of 6.0 µg/L for GET E/F based on the California Drinking Water Standard of 6 µg/L.

d. **Plant Performance and Attainability.** Analysis of the effluent data shows that the MEC of 6.8 µg/L is greater than the than the applicable WQBEL. This exceedance only occurred three times during the last five years. Upon mixing with ARGET and GET J effluents in Buffalo Creek the in-stream value would be less than the WQO. The technology based effluent limit is 4 µg/L. Compliance with that limit would also comply with the WQBEL.

iv. **Chlorine Residual**

a. **WQO.** USEPA developed NAWQC for protection of freshwater aquatic life for chlorine residual. The recommended 4-day average (chronic) and 1-hour average (acute) criteria for chlorine residual are 0.011 µg/L and 0.019 µg/L, respectively. These criteria are protective of the Basin Plan's narrative toxicity objective.

b. **RPA Results.** The concentrations of chlorine used to disinfect wastewater are high enough to harm aquatic life and violate the Basin Plan narrative toxicity objective if discharged to the receiving water. Reasonable potential therefore does exist and effluent limits are required.

Federal regulations at 40 C.F.R. §122.44(d)(1)(i) requires that, "*Limitations must control all pollutants or pollutant parameters (either conventional, nonconventional, or toxic pollutants) which the Director determines are or may be discharged at a level which will cause, have the reasonable potential to cause, or contribute to an excursion above any State water quality*

standard, including State narrative criteria for water quality." For priority pollutants, the SIP dictates the procedures for conducting the RPA. Chlorine is not a priority pollutant. Therefore, the Central Valley Water Board is not restricted to one particular RPA method. Due to the site-specific conditions of the discharge, the Central Valley Water Board has used its judgment in determining the appropriate method for conducting the RPA for this non-priority pollutant constituent.

USEPA's September 2010 NPDES Permit Writer's Manual, page 6-30, states, "*State implementation procedures might allow, or even require, a permit writer to determine reasonable potential through a qualitative assessment process without using available facility-specific effluent monitoring data or when such data are not available…A permitting authority might also determine that WQBELs are required for specific pollutants for all facilities that exhibit certain operational or discharge characteristics (e.g., WQBELs for pathogens in all permits for POTWs discharging to contact recreational waters).*" USEPA's Technical Support Document for Water Quality-Based Toxics Control, EPA/505/2-90-001(TSD) also recommends that factors other than effluent data should be considered in the RPA, "*When determining whether or not a discharge causes, has the reasonable potential to cause, or contributes to an excursion of a numeric or narrative water quality criterion for individual toxicants or for toxicity, the regulatory authority can use a variety of factors and information where facility-specific effluent monitoring data are unavailable. These factors also should be considered with available effluent monitoring data.*" With regard to POTWs, USEPA recommends that, "*POTWs should also be characterized for the possibility of chlorine and ammonia problems.*" (TSD, p. 50)

The Discharger uses chlorine to control biological growth in the extraction wells associated with the White Rock GET, which is extremely toxic to aquatic organisms. Although the Discharger uses an air stripper to remove volatile organics, which will also dechlorinate the effluent prior to discharge to Buffalo Creek, the existing chlorine use and the potential for chlorine to be discharged provides the basis for the discharge to have a reasonable potential to cause or contribute to an in-stream excursion above the NAWQC.

c. **WQBELs.** The USEPA *Technical Support Document for Water Quality-Based Toxics Control* [EPA/505/2-90-001] contains statistical methods for converting chronic (4-day) and acute (1-hour) aquatic life criteria to average monthly and maximum daily effluent limitations based on the variability of the existing data and the expected frequency of monitoring. However, because chlorine is an acutely toxic constituent that can and will be monitored continuously, an average 1-hour limitation is considered more appropriate than an average daily limitation. This Order contains a 4-day average effluent limitation and 1-hour average effluent limitation for chlorine residual of 0.011 µg/L and 0.019 µg/L, respectively, based on USEPA's NAWQC, which implements the Basin Plan's narrative toxicity objective for protection of aquatic life.

d. **Plant Performance and Attainability**. The Discharger conducted a pilot test of the disinfection system on the White Rock GET extraction wells and showed that at the proposed chlorine dosage that the effluent concentration remained below 0.01 mg/L.

v. **Tocxicity.** See Section IV.C.5 of the Fact Sheet regarding whole effluent toxicity.

vi. **pH**

a. **WQO.** The Basin Plan includes a water quality objective for surface waters (except for Goose Lake) that the *"…pH shall not be depressed below 6.5 nor raised above 8.5.*"

b. **RPA Results.** The effluent pH ranged from 7.2 to 8.4 for GET E/F. As the effluent from GET E/F, along with GET J and ARGET comprise the flow of Buffalo Creek during most of the year the discharges have a reasonable potential to cause an in-stream excursion above the WQO.

c. **WQBELs.** Effluent limitations for pH of 6.5 as an instantaneous minimum and 8.5 as an instantaneous maximum are included in this Order based on protection of the Basin Plan objectives for pH.

d. **Plant Performance and Attainability.** The plants consistently achieve a pH within the acceptable range.

4. WQBEL Calculations

a. This Order includes WQBELs for pH, chlorine residual, toxicity, perchlorate and NDMA. The general methodology for calculating WQBELs based on the different criteria/objectives is described in subsections IV.C.4.b through e, below. See Attachment H for the WQBEL calculations.

b. **Effluent Concentration Allowance.** For each water quality criterion/objective, the ECA is calculated using the following steady-state mass balance equation from Section 1.4 of the SIP:

$$ECA = C + D(C - B) \quad \text{where } C>B, \text{ and}$$
$$ECA = C \quad \text{where } C \leq B$$

where:

ECA = effluent concentration allowance
D = dilution credit
C = the priority pollutant criterion/objective
B = the ambient background concentration.

According to the SIP, the ambient background concentration (B) in the equation above shall be the observed maximum with the exception that an ECA calculated from a priority pollutant criterion/objective that is intended to protect human health from carcinogenic effects shall use the arithmetic mean concentration of the ambient

background samples. For ECAs based on MCLs, which implement the Basin Plan's chemical constituents objective and are applied as annual averages, an arithmetic mean is also used for B due to the long-term basis of the criteria.

c. **Basin Plan Objectives and MCLs.** For WQBELs based on site-specific numeric Basin Plan objectives or MCLs, the effluent limitations are applied directly as the ECA as either an MDEL, AMEL, or average annual effluent limitations, depending on the averaging period of the objective.

d. **Aquatic Toxicity Criteria.** WQBELs based on acute and chronic aquatic toxicity criteria are calculated in accordance with Section 1.4 of the SIP. The ECAs are converted to equivalent long-term averages (i.e. LTAacute and LTAchronic) using statistical multipliers and the lowest LTA is used to calculate the AMEL and MDEL using additional statistical multipliers.

e. **Human Health Criteria.** WQBELs based on human health criteria, are also calculated in accordance with Section 1.4 of the SIP. The ECAs are set equal to the AMEL and a statistical multiplier was used to calculate the MDEL.

$$AMEL = mult_{AMEL}\left[\min\left(\overbrace{M_A ECA_{acute}}^{LTA_{acute}}, M_C ECA_{chronic}\right)\right]$$

$$MDEL = mult_{MDEL}\left[\min\left(M_A ECA_{acute}, \underbrace{M_C ECA_{chronic}}_{LTA_{chronic}}\right)\right]$$

$$MDEL_{HH} = \left(\frac{mult_{MDEL}}{mult_{AMEL}}\right) AMEL_{HH}$$

where:
$mult_{AMEL}$ = statistical multiplier converting minimum LTA to AMEL
$mult_{MDEL}$ = statistical multiplier converting minimum LTA to MDEL
M_A = statistical multiplier converting acute ECA to LTA_{acute}
M_C = statistical multiplier converting chronic ECA to $LTA_{chronic}$

Summary of Water Quality-Based Effluent Limitations
Discharge Point Nos. 001 though 017

Table F-8. Summary of Water Quality-Based Effluent Limitations

Parameter	Units	Effluent Limitations				
		Average Monthly	Average Weekly	Maximum Daily	Instantaneous Minimum	Instantaneous Maximum
perchlorate	µg/L	6				
NDMA – Discharge 002	µg/L	0.003		0.010		
Acetaldehyde	µg/L	5		5		
1,2-DCA	µg/L	0.38		0.5		

Parameter	Units	Effluent Limitations				
		Average Monthly	Average Weekly	Maximum Daily	Instantaneous Minimum	Instantaneous Maximum
pH	standard units	--	--	--	6.5	8.5
Chlorine residual	mg/L	0.01	--	0.02	--	--
Acute Toxicity[1]	% survival					
Chronic Toxicity2	TU_c	Narrative				

[1] Not less than 90% median for any three consecutive bioassays and 70% for a single bioassay.
[2] There shall be no chronic toxicity in the effluent discharge.

5. Whole Effluent Toxicity (WET)

For compliance with the Basin Plan's narrative toxicity objective, this Order requires the Discharger to conduct whole effluent toxicity testing for acute and chronic toxicity, as specified in the Monitoring and Reporting Program (Attachment E section V.). This Order also contains effluent limitations for acute toxicity and requires the Discharger to implement best management practices to investigate the causes of, and identify corrective actions to reduce or eliminate effluent toxicity.

a. **Acute Aquatic Toxicity.** The Basin Plan contains a narrative toxicity objective that states, "All waters shall be maintained free of toxic substances in concentrations that produce detrimental physiological responses in human, plant, animal, or aquatic life." (Basin Plan at page III-8.00) The Basin Plan also states that, "…effluent limits based upon acute biotoxicity tests of effluents will be prescribed where appropriate…".

For priority pollutants, the SIP dictates the procedures for conducting the RPA. Acute toxicity is not a priority pollutant. Therefore, the Central Valley Water Board is not restricted to one particular RPA method. Acute whole effluent toxicity is not a priority pollutant. Therefore, due to the site-specific conditions of the discharge, the Central Valley Water Board has used professional judgment in determining the appropriate method for conducting the RPA . USEPA's September 2010 NPDES Permit Writer's Manual, page 6-30, states, "*State implementation procedures might allow, or even require, a permit writer to determine reasonable potential through a qualitative assessment process without using available facility-specific effluent monitoring data or when such data are not available…A permitting authority might also determine that WQBELs are required for specific pollutants for all facilities that exhibit certain operational or discharge characteristics (e.g., WQBELs for pathogens in all permits for POTWs discharging to contact recreational waters).*" Acute toxicity effluent limits are required to ensure compliance with the Basin Plan's narrative toxicity objective.

USEPA Region 9 provided guidance for the development of acute toxicity effluent limitations in the absence of numeric water quality objectives for toxicity in its document titled "Guidance for NPDES Permit Issuance", dated February 1994. In section B.2. "Toxicity Requirements" (pgs. 14-15) it states that, "In the absence of specific numeric water quality objectives for acute and chronic toxicity, the narrative criterion 'no toxics in toxic amounts' applies. Achievement of the narrative criterion, as applied herein, means that ambient waters shall not demonstrate for acute toxicity: 1)

less than 90% survival, 50% of the time, based on the monthly median, or 2) less than 70% survival, 10% of the time, based on any monthly median. For chronic toxicity, ambient waters shall not demonstrate a test result of greater than 1 TUc." Accordingly, effluent limitations for acute toxicity have been included in this Order as follows:

Acute Toxicity. Survival of aquatic organisms in 96-hour bioassays of undiluted waste shall be no less than:

Minimum for any one bioassay ---------- 70%
Median for any three consecutive bioassays ---------- 90%

b. **Chronic Aquatic Toxicity.** The Basin Plan contains a narrative toxicity objective that states, "*All waters shall be maintained free of toxic substances in concentrations that produce detrimental physiological responses in human, plant, animal, or aquatic life.*" (Basin Plan at page III-8. Based on chronic WET testing performed by the Discharger from December 2003 through March 2013 , the discharge does not have reasonable potential to cause or contribute to an in-stream excursion above of the Basin Plan's narrative toxicity objective. OR Adequate chronic WET data is not available to determine if the discharge has reasonable potential to cause or contribute to an in-stream excursion above the Basin Plan's narrative toxicity objective**.** As shown in Table F-10 below.

Table F-9: Whole Effluent Chronic Toxicity Testing Results

	Fathead Minnow *Pimephales promelas*		**Water Flea** *Ceriodaphnia dubia*		**Green Algae** *Selenastrum capricornutum*
Date	Survival (TUc)	Growth (TUc)	Survival (TUc)	Reproduction (TUc)	Growth (TUc)
December 2003	1	1	1	1	1
March 2004	1	1	1	1	1
June 2004	1	1	1	1	1
September 2004	1	1	1	1	1
December 2004	1	1	1	1	1
December 2005	1	2	1	2	1
March 2007	1	1	1	1	1
March 2008	1	1	1	1	1
March 2009	1	1	1	1	1
March 2010	1	1	1	1	1
March 2011	1	1	1	1	1
March 2012	1	1	1	1	1
March 2013	1	1	1	1	1

No dilution has been granted for the chronic condition. Therefore, chronic toxicity testing results exceeding 1 chronic toxicity unit (TUc) demonstrates the discharge has a reasonable potential to cause or contribute to an exceedance of the Basin Plan's narrative toxicity objective.

The Monitoring and Reporting Program of this Order requires annual chronic WET monitoring for demonstration of compliance with the narrative toxicity objective. In addition to WET monitoring, the Special Provision in section VI.C.2.a of the Order requires the Discharger to submit to the Central Valley Water Board an Initial Investigative TRE Workplan for approval by the Executive Officer, to ensure the Discharger has a plan to immediately move forward with the initial tiers of a TRE, in the event effluent toxicity is encountered in the future. The provision also includes a numeric toxicity monitoring trigger, requirements for accelerated monitoring, and requirements for TRE initiation if toxicity is demonstrated.

Numeric chronic WET effluent limitations have not been included in this Order. The SIP contains implementation gaps regarding the appropriate form and implementation of chronic toxicity limits. This has resulted in the petitioning of a NPDES permit in the Los Angeles Region[1] that contained numeric chronic toxicity effluent limitations. To address the petition, the State Water Board adopted WQO 2003-012 directing its staff to revise the toxicity control provisions in the SIP. The State Water Board states the following in WQO 2003-012, "*In reviewing this petition and receiving comments from numerous interested persons on the propriety of including numeric effluent limitations for chronic toxicity in NPDES permits for publicly-owned treatment works that discharge to inland waters, we have determined that this issue should be considered in a regulatory setting, in order to allow for full public discussion and deliberation. We intend to modify the SIP to specifically address the issue. We anticipate that review will occur within the next year. We therefore decline to make a determination here regarding the propriety of the final numeric effluent limitations for chronic toxicity contained in these permits."* The process to revise the SIP is currently underway. Proposed changes include clarifying the appropriate form of effluent toxicity limits in NPDES permits and general expansion and standardization of toxicity control implementation related to the NPDES permitting process. Since the toxicity control provisions in the SIP are under revision it is infeasible to develop numeric effluent limitations for chronic toxicity. Therefore, this Order requires that the Discharger meet best management practices for compliance with the Basin Plan's narrative toxicity objective, as allowed under 40 CFR 122.44(k).

To ensure compliance with the Basin Plan's narrative toxicity objective, the Discharger is required to conduct chronic WET testing, as specified in the Monitoring and Reporting Program (Attachment E section V.). Furthermore, the Special Provision contained at VI.C.2.a. of this Order requires the Discharger to investigate the causes of, and identify and implement corrective actions to reduce or eliminate effluent toxicity. If the discharge demonstrates toxicity exceeding the numeric toxicity monitoring trigger, the Discharger is required to initiate a Toxicity Reduction Evaluation (TRE) in accordance with an approved TRE workplan. The numeric toxicity monitoring trigger is not an effluent limitation; it is the toxicity threshold at which the Discharger is required to perform accelerated chronic toxicity monitoring, as well as, the threshold to initiate a TRE if effluent toxicity has been demonstrated.

[1] In the Matter of the Review of Own Motion of Waste Discharge Requirements Order Nos. R4-2002-0121 [NPDES No. CA0054011] and R4-2002-0123 [NPDES NO. CA0055119] and Time Schedule Order Nos. R4-2002-0122 and R4-2002-0124 for Los Coyotes and Long Beach Wastewater Reclamation Plants Issued by the California Regional Water Quality Control Board, Los Angeles Region SWRCB/OCC FILES A-1496 AND 1496(a)

D. Final Effluent Limitation Considerations

1. Mass-based Effluent Limitations

40 CFR 122.45(f)(1) requires effluent limitations be expressed in terms of mass, with some exceptions, and 40 CFR 122.45(f)(2) allows pollutants that are limited in terms of mass to additionally be limited in terms of other units of measurement. This Order includes effluent limitations expressed in terms of mass and concentration. In addition, pursuant to the exceptions to mass limitations provided in 40 CFR 122.45(f)(1), some effluent limitations are not expressed in terms of mass, such as pH and temperature, and when the applicable standards are expressed in terms of concentration (e.g., CTR criteria and MCLs) and mass limitations are not necessary to protect the beneficial uses of the receiving water.

Mass-based effluent limitations were calculated by multiplying the concentration limitation by the Facilities' allowable discharge flow rate and the appropriate unit conversion factor. Consistent with 40 CFR 122.45(b)(2)(i), the reasonable measure of actual flow for the Facilities are those values listed in Table F-5 of the Fact Sheet as the Discharger is encouraged to maximize groundwater remediation and flows are likely to increase over time with the addition of new extraction wells to expedite cleanup.

2. Averaging Periods for Effluent Limitations – Not Applicable

3. Anti-Backsliding Requirements

The Clean Water Act specifies that a revised permit may not include effluent limitations that are less stringent than the previous permit unless a less stringent limitation is justified based on exceptions to the anti-backsliding provisions contained in Clean Water Act sections 402(o) or 303(d)(4), or, where applicable, 40 CFR 122.44(l).

The effluent limitations in this Order are at least as stringent as the effluent limitations in the previous Order, with the exception of effluent limitations for copper. Elevated copper concentrations were shown to be due to the sampling tubes being made of brass. The reasonable potential analysis now shows that there is no reasonable potential for copper to exceed its Water Quality Objective. This relaxation of effluent limitations is consistent with the anti-backsliding requirements of the CWA and federal regulations.

4. Antidegradation Policies

The permitted discharge is consistent with the antidegradation provisions of 40 CFR 131.12 and State Water Board Resolution No. 68-16. This Order provides for an increase in the volume and mass of pollutants discharged. The increase will not have significant impacts on aquatic life or other beneficial uses. The increase will not cause a violation of water quality objectives. The potential increase in the discharge allows for the reuse of treated groundwater and increases the efficiency of the groundwater remediation system and is considered to be a benefit to the people of the State. Compliance with these requirements will result in the use of best practicable treatment or control of the discharge.

5. Stringency of Requirements for Individual Pollutants

This Order contains both technology-based and water quality-based effluent limitations for individual pollutants. The technology-based effluent limitations consist of restrictions on volatile organics, perchlorate and NDMA. The WQBELs consist of restrictions on

Restrictions on flow, chlorine residual, pH, toxicity, perchlorate and NDMA. This Order's technology-based effluent restrictions implement the minimum, applicable federal technology-based requirements.

Water quality-based effluent limitations have been scientifically derived to implement water quality objectives that protect beneficial uses. Both the beneficial uses and the water quality objectives have been approved pursuant to federal law and are the applicable federal water quality standards. To the extent that toxic pollutant water quality-based effluent limitations were derived from the CTR, the CTR is the applicable standard pursuant to 40 C.F.R. section 131.38. The procedures for calculating the individual water quality-based effluent limitations for priority pollutants are based on the CTR implemented by the SIP, which was approved by U.S. EPA on May 18, 2000. All beneficial uses and water quality objectives contained in the Basin Plan were approved under state law and submitted to and approved by U.S. EPA prior to May 30, 2000. Any water quality objectives and beneficial uses submitted to U.S. EPA prior to May 30, 2000, but not approved by U.S. EPA before that date, are nonetheless "applicable water quality standards for purposes of the CWA" pursuant to 40 C.F.R. section 131.21(c)(1).

Summary of Final Effluent Limitations
Discharge Points 001 through 011 and 013 through 017
EFF-001 through EFF-011, and EFF 0113 through EFF-017

Table F-10a. Summary of Final Effluent Limitations

Parameter	Units	Effluent Limitations				Basis[1]
		Average Monthly	Maximum Daily	Instantaneous Minimum	Instantaneous Maximum	
Flow – Discharge 001	mgd	5.0	5.0	--	--	PF
Flow – Discharge 002	mgd	11.52	11.52			PF
Flow – Discharge 004	mgd	3.46	3.46			PF
Flow – Discharge 005	mgd	6.75	6.75			PF
Flow – Discharge 007	mgd	4.03	4.03			PF
Flow – Discharge 008	mgd	2.88	2.88			PF
Flow – Discharge 009	mgd	1.44	1.44			PF
Flow – Discharge 010	mgd	0.58	0.58			PF
Flow – Discharge 013	mgd	1.08	1.08			PF
Flow – Discharge 014	mgd	2.59	2.59			PF
Flow – Discharge 015	mgd	3.17	3.17			PF
Flow – Discharge 016	mgd	5.76	5.76			PF
Flow – Discharge 017	mgd	1.3	1.3			PF
Flow – Discharge 018	mgd	1.15	1.15			PF
Volatile Organic Contaminants	µg/L	0.5	0.7	--	--	ML
Trichloroethylene – Discharge 002	µg/L	--	1.5			BP

Parameter	Units	Effluent Limitations				Basis[1]
		Average Monthly	Maximum Daily	Instantaneous Minimum	Instantaneous Maximum	
Trichloroethylene – Discharge 018	µg/L	3	4			BP
Cis-1,2-DCE – Discharge 002	µg/L		1.5			BP
Chloroform – Discharges 005, 013, and 018	µg/L	3.0	5.0			BP
Chloroform – Discharge 004	µg/L	2	4			BP
1,4-Dioxane	µg/L	3	6			ML,PB
1,2-Dichloroethane	µg/L	0.38	0.5			BP
N-nitrosodimethylamine – Discharges 001, 002, 016 and 017	µg/L	0.002	0.010	--	--	ML
N-nitrosodimethylamine - Discharges 005, 007, 008, 009 and 018	µg/L	0.007	0.010			PF
Perchlorate	µg/L	4	6			ML
Acetaldehyde	µg/L	5	--	--	--	PB
Formaldehyde	µg/L	50	--			PB
Acrylamide	µg/L	0.05				BP
pH	pH	--	--	6.5	8.5	BP, PB
Chlorine Residual		0.01	0.02			NAWQC
Acute Toxicity	% survival		[2]			PB
Chronic Toxicity	TU_c		[3]			PB

[1] BP – based on performance of the facility
PF – based on the permitted flow of the facility
PB – based on water quality objectives contained in the Basin Plan
ML - based on the ability of the treatment systems to dependably remove the pollutant to below reporting levels for the current analytical methods
NAWQC – Based on USEPA's National Ambient Water Quality Criteria for the protection of freshwater aquatic life

[2] Survival of aquatic organisms in 96-hour bioassays of undiluted waste shall not be less than:
Minimum of anyone bioassay – 70 percent
Mediam of any three consecutive bioassays – 90 percent

[3] There shall be no chronic toxicity in the discharge.

Summary of Final Effluent Limitations
Discharge Point 012
EFF-012

Table F-10b Summary of Final Effluent Limitations EFF-012

Parameter	Units	Effluent Limitations				Basis[1]
		Total Maximum Discharge	Maximum Daily	Instantaneous Minimum	Instantaneous Maximum	
Flow – Per Well Purge/Development Water	mgd	0.01	0.01	--	--	PF
Flow – Per Aquifer Test	mgd	14.4	3.6			PF
Volatile Organic Contaminants	µg/L		5.0			BP
1,4-Dioxane	µg/L		10			BP
N-nitrosodimethylamine	µg/L		0.020			BP
Perchlorate	µg/L		12			BP
pH	pH			6.5	8.5	PB

[1] BP – based on performance of the facility
PF – based on the permitted flow of the facility
PB – based on water quality objectives contained in the Basin Plan

6. Interim Effluent Limitations – Not Applicable

7. Land Discharge Specifications –Discharges 016 and 017

a. The discharge shall not cause pollution or nuisance as defined by the California Water Code.

b. The discharge of treated groundwater from the White Rock GET shall only be to Teichert for their use at its Grant Line Road and/or Scott Road facilities, or to Rebel Hill Ditch, or to the Aerojet industrial water supply system, or to Buffalo Creek as shown on Attachment B3, a part of this Order**.**

c. The discharge of treated groundwater from the GET AB facility shall only be to Teichert for their use at its Grant Line Road and/or Scott Road facilities, or to Rebel Hill Ditch, or to the Aerojet industrial water supply system, or to Buffalo Creek as shown on Attachment B3 a part of this Order

8. Reclamation Specifications – Not Applicable

V. RATIONALE FOR RECEIVING WATER LIMITATIONS

Basin Plan water quality objectives to protect the beneficial uses of surface water and groundwater include numeric objectives and narrative objectives, including objectives for chemical constituents, toxicity, and tastes and odors. The toxicity objective requires that surface water and groundwater be maintained free of toxic substances in concentrations that produce detrimental physiological responses in humans, plants, animals, or aquatic life. The chemical constituent objective requires

that surface water and groundwater shall not contain chemical constituents in concentrations that adversely affect any beneficial use or that exceed the maximum contaminant levels (MCLs) in Title 22, CCR. The tastes and odors objective states that surface water and groundwater shall not contain taste- or odor-producing substances in concentrations that cause nuisance or adversely affect beneficial uses. The Basin Plan requires the application of the most stringent objective necessary to ensure that surface water and groundwater do not contain chemical constituents, toxic substances, radionuclides, or taste and odor producing substances in concentrations that adversely affect domestic drinking water supply, agricultural supply, or any other beneficial use.

A. Surface Water

1. CWA section 303(a-c), requires states to adopt water quality standards, including criteria where they are necessary to protect beneficial uses. The Central Valley Water Board adopted water quality criteria as water quality objectives in the Basin Plan. The Basin Plan states that "[t]*he numerical and narrative water quality objectives define the least stringent standards that the Regional Water Board will apply to regional waters in order to protect the beneficial uses.*" The Basin Plan includes numeric and narrative water quality objectives for various beneficial uses and water bodies. This Order contains receiving surface water limitations based on the Basin Plan numerical and narrative water quality objectives for bacteria, biostimulatory substances, color, chemical constituents, dissolved oxygen, floating material, oil and grease, pH, pesticides, radioactivity, suspended sediment, settleable substances, suspended material, tastes and odors, temperature, toxicity, and turbidity.

B. Groundwater –Not Applicable

VI. RATIONALE FOR PROVISIONS

A. Standard Provisions

Standard Provisions, which apply to all NPDES permits in accordance with 40 C.F.R. section 122.41, and additional conditions applicable to specified categories of permits in accordance with 40 C.F.R. section 122.42, are provided in Attachment D. The discharger must comply with all standard provisions and with those additional conditions that are applicable under section 122.42.

Sections 122.41(a)(1) and (b) through (n) of 40 C.F.R. establish conditions that apply to all state-issued NPDES permits. These conditions must be incorporated into the permits either expressly or by reference. If incorporated by reference, a specific citation to the regulations must be included in the Order. Section 123.25(a)(12) of 40 C.F.R. allows the state to omit or modify conditions to impose more stringent requirements. In accordance with 40 C.F.R. section 123.25, this Order omits federal conditions that address enforcement authority specified in 40 C.F.R. sections 122.41(j)(5) and (k)(2) because the enforcement authority under the Water Code is more stringent. In lieu of these conditions, this Order incorporates by reference Water Code section 13387(e).

B. Special Provisions

1. Reopener Provisions

a. **Chronic Whole Effluent Toxicity.** This Order requires the Discharger to investigate the causes of, and identify corrective actions to reduce or eliminate effluent toxicity through a Toxicity Reduction Evaluation (TRE). This Order may be reopened to

include a numeric chronic toxicity limitation, a new acute toxicity limitation, and/or a limitation for a specific toxicant identified in the TRE. Additionally, if a numeric chronic toxicity water quality objective is adopted by the State Water Board, this Order may be reopened to include a numeric chronic toxicity limitation based on that objective.

b. **Water Effects Ratio (WER) and Metal Translators.** A default WER of 1.0 has been used in this Order for calculating CTR criteria for applicable priority pollutant inorganic constituents. In addition, default dissolved-to-total metal translators have been used to convert water quality objectives from dissolved to total recoverable when developing effluent limitations. If the Discharger performs studies to determine site-specific WERs and/or site-specific dissolved-to-total metal translators, this Order may be reopened to modify the effluent limitations for the applicable inorganic constituents.

2. Special Studies and Additional Monitoring Requirements – See also Section VI.B.2 of the Order

a. **Chronic Whole Effluent Toxicity Requirements.** The Basin Plan contains a narrative toxicity objective that states, "All waters shall be maintained free of toxic substances in concentrations that produce detrimental physiological responses in human, plant, animal, or aquatic life." (Basin Plan at page <III-8.00 Based on whole effluent chronic toxicity testing performed by the Discharger from December 2003 to March 2013 the discharge does not have reasonable potential to cause or contribute to an in-stream excursion above of the Basin Plan's narrative toxicity objective.

The Monitoring and Reporting Program of this Order requires chronic WET monitoring for demonstration of compliance with the narrative toxicity objective. In addition to WET monitoring, this provision requires the Discharger to submit to the Central Valley Water Board an Initial Investigative TRE Workplan for approval by the Executive Officer, to ensure the Discharger has a plan to immediately move forward with the initial tiers of a TRE, in the event effluent toxicity is encountered in the future. The provision also includes a numeric toxicity monitoring trigger, requirements for accelerated monitoring, and requirements for TRE initiation if toxicity is demonstrated.

Monitoring Trigger. A numeric toxicity monitoring trigger of **> 1** TUc (where TUc = 100/NOEC) is applied in the provision, because this Order does not allow any dilution for the chronic condition. Therefore, a TRE is triggered when the effluent exhibits toxicity at 100% effluent.

Accelerated Monitoring. The provision requires accelerated WET testing when a regular WET test result exceeds the monitoring trigger. The purpose of accelerated monitoring is to determine, in an expedient manner, whether there is toxicity before requiring the implementation of a TRE. Due to possible seasonality of the toxicity, the accelerated monitoring should be performed in a timely manner, preferably taking no more than 2 to 3 months to complete.

The provision requires accelerated monitoring consisting of four chronic toxicity tests in a six-week period (i.e., one test every two weeks) using the species that exhibited toxicity. Guidance regarding accelerated monitoring and TRE initiation is provided in

the *Technical Support Document for Water Quality-based Toxics Control,* EPA/505/2-90-001, March 1991 (TSD). The TSD at page 118 states, "*EPA recommends if toxicity is repeatedly or periodically present at levels above effluent limits more than 20 percent of the time, a TRE should be required.*" Therefore, four accelerated monitoring tests are required in this provision. If no toxicity is demonstrated in the four accelerated tests, then it demonstrates that toxicity is not present at levels above the monitoring trigger more than 20 percent of the time (only 1 of 5 tests are toxic, including the initial test). However, notwithstanding the accelerated monitoring results, if there is adequate evidence of effluent toxicity (i.e. toxicity present exceeding the monitoring trigger more than 20 percent of the time), the Executive Officer may require that the Discharger initiate a TRE.

See the WET Accelerated Monitoring Flow Chart (Figure F-1), below, for further clarification of the accelerated monitoring requirements and for the decision points for determining the need for TRE initiation.

TRE Guidance. The Discharger is required to prepare a TRE Workplan in accordance with USEPA guidance. Numerous guidance documents are available, as identified below:

- Toxicity Reduction Evaluation Guidance for Municipal Wastewater Treatment Plants, EPA/833-B-99/002, August 1999.
- Generalized Methodology for Conducting Industrial Toxicity Reduction Evaluations (TREs), EPA/600/2-88/070, April 1989.
- Methods for Aquatic Toxicity Identification Evaluations: Phase I Toxicity Characterization Procedures, Second Edition, EPA 600/6-91/003, February 1991.
- Toxicity Identification Evaluation: Characterization of Chronically Toxic Effluents, Phase I, EPA/600/6-91/005F, May 1992.
- Methods for Aquatic Toxicity Identification Evaluations: Phase II Toxicity Identification Procedures for Samples Exhibiting Acute and Chronic Toxicity, Second Edition, EPA/600/R-92/080, September 1993.
- Methods for Aquatic Toxicity Identification Evaluations: Phase III Toxicity Confirmation Procedures for Samples Exhibiting Acute and Chronic Toxicity, Second Edition, EPA 600/R-92/081, September 1993.
- Methods for Measuring the Acute Toxicity of Effluents and Receiving Waters to Freshwater and Marine Organisms, Fifth Edition, EPA-821-R-02-012, October 2002.
- Short-term Methods for Estimating the Chronic Toxicity of Effluents and Receiving Waters to Freshwater Organisms, Fourth Edition, EPA-821-R-02-013, October 2002.
- Technical Support Document for Water Quality-based Toxics Control, EPA/505/2-90-001, March 1991.

Figure F-1
WET Accelerated Monitoring Flow Chart

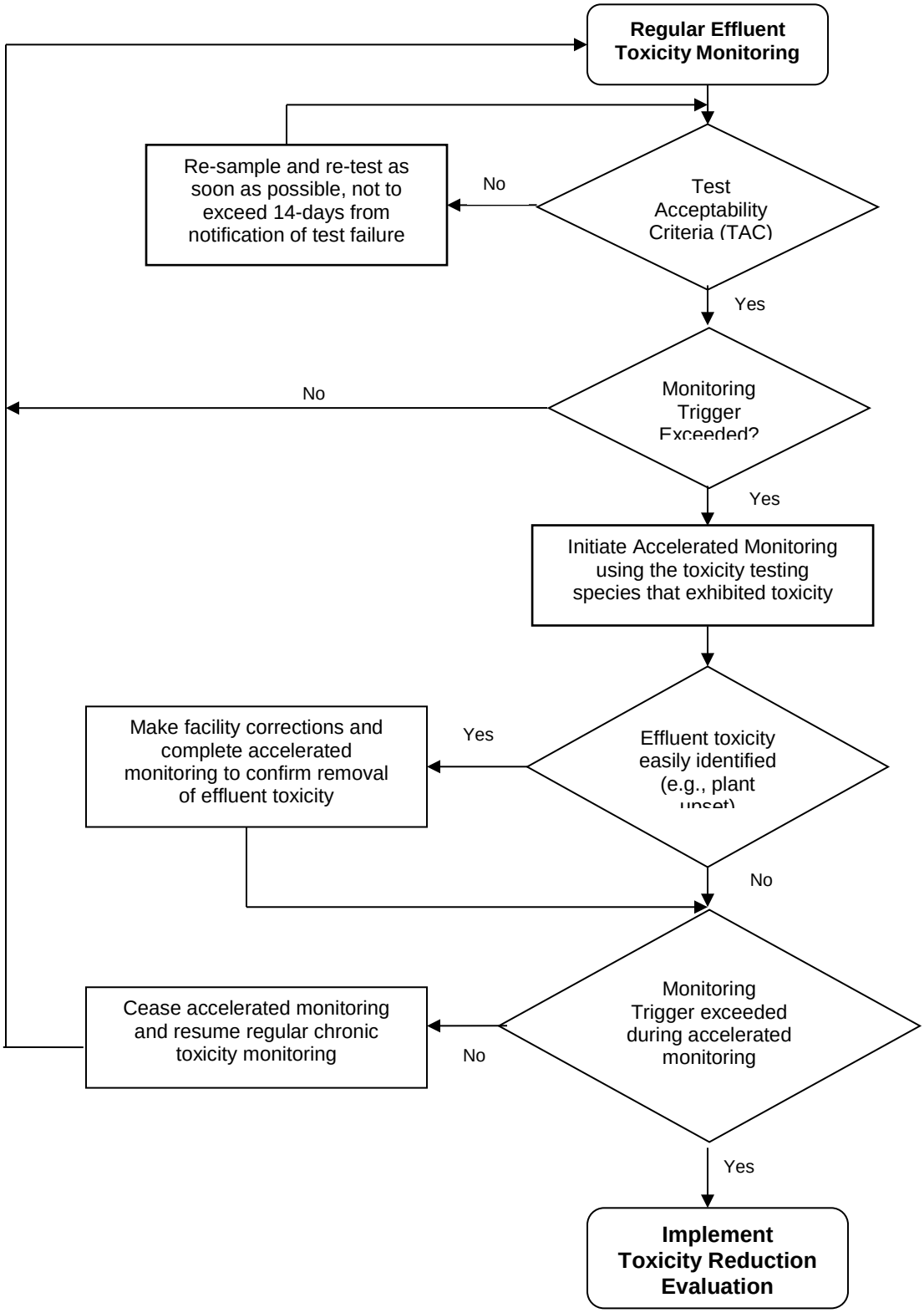

3. Best Management Practices and Pollution Prevention – Not Applicable

4. Construction, Operation, and Maintenance Specification – See Section VI.C.4 of the Order.

5. Other Special Provisions

a. **Ownership Change.** To maintain the accountability of the operation of the Facility, the Discharger is required to notify the succeeding owner or operator of the existence of this Order by letter if, and when, there is any change in control or ownership of land or waste discharge facilities presently owned or controlled by the Discharger.

6. Compliance Schedules – Not Applicable

VII. RATIONALE FOR MONITORING AND REPORTING REQUIREMENTS

Section 122.48 of 40 C.F.R. requires that all NPDES permits specify requirements for recording and reporting monitoring results. Water Code sections 13267 and 13383 authorize the Central Valley Water Board to require technical and monitoring reports. The Monitoring and Reporting Program (MRP), Attachment E, establishes monitoring and reporting requirements that implement federal and state requirements. The following provides the rationale for the monitoring and reporting requirements contained in the MRP for this facility.

A. Influent Monitoring

1. Influent monitoring is required to collect data on the characteristics of the wastewater and to assess compliance with effluent limitations (e.g., BOD_5 and TSS reduction requirements). For the most part, the monitoring frequencies have been retained from Order No. R5-2011-0088. There have been some slight changes based on the historical sampling that has occurred. As an example, most SVOC sampling has been eliminated as they have not been found in the influent or in the groundwater feeding the GET facility.

B. Effluent Monitoring

1. Pursuant to the requirements of 40 CFR 122.44(i)(2) effluent monitoring is required for all constituents with effluent limitations. Effluent monitoring is necessary to assess compliance with effluent limitations, assess the effectiveness of the treatment process, and to assess the impacts of the discharge on the receiving stream and groundwater.

2. For the most part effluent monitoring frequencies and sample types, except for copper and SVOCs, have been retained from Order No. R5-2011-0088 to determine compliance with effluent limitations. Sampling has been added at GET E/F for acrylamide due to the current use of an acrylamide-based polymer at that facility.

3. Monitoring data collected over the previous permit term for copper did not demonstrate reasonable potential to exceed water quality objectives/criteria. Thus, specific monitoring requirements for this parameter have not been retained from Order No. R5-2011-0088.

4. California Water Code section 13176, subdivision (a), states: “The analysis of any material required by [Water Code sections 13000-16104] shall be performed by a laboratory that has accreditation or certification pursuant to Article 3 (commencing with Section 100825) of Chapter 4 of Part 1 of Division 101 of the Health and Safety Code.”

The Department of Public Health certifies laboratories through its Environmental Laboratory Accreditation Program (ELAP).

Section 13176 cannot be interpreted in a manner that would violate federal holding time requirements that apply to NPDES permits pursuant to the Clean Water Act. (Wat. Code §§ 13370, subd. (c), 13372, 13377.) Section 13176 is inapplicable to NPDES permits to the extent it is inconsistent with Clean Water Act requirements. (Wat. Code § 13372, subd. (a).) The holding time requirements are 15 minutes for chlorine residual, dissolved oxygen, and pH, and immediate analysis is required for temperature. (40 C.F.R. § 136.3(e), Table II) Due to the location of the Facility, it is both legally and factually impossible for the Discharger to comply with section 13176 for constituents with short holding times.

C. Whole Effluent Toxicity Testing Requirements

1. **Acute Toxicity.** Quarterly 96-hour bioassay testing is required to demonstrate compliance with the effluent limitation for acute toxicity.

2. **Chronic Toxicity.** Annual chronic whole effluent toxicity testing of Discharges 001 and 002 is required in order to demonstrate compliance with the Basin Plan's narrative toxicity objective.

D. Receiving Water Monitoring

1. Surface Water

a. Receiving water monitoring is necessary to assess compliance with receiving water limitations and to assess the impacts of the discharge on the receiving stream.

2. Groundwater – Not Applicable

E. Other Monitoring Requirements

1. Biosolids Monitoring

Biosolids monitoring is required to ensure compliance with the biosolids disposal requirements contained in the Special Provision contained in section VI.C.6.a. of this Order. Biosolids disposal requirements are imposed pursuant to 40 CFR Part 503 to protect public health and prevent groundwater degradation.

2. Pond Monitoring –Not applicable

3. Land Discharge Monitoring

Land discharge monitoring is required to demonstrate the breakdown of disposal from Discharge 016 and 017 which is allowed to discharge water to Rebel Hill Ditch. This is the Discharger's least preferred option as the recharge of this water causes the groundwater extraction system to be less efficient in capturing the groundwater contamination plume. The preferred option for these two discharges is reuse by the Discharger's industrial water supply system and/or the Teichert Aggregate Processing Facility on Grant Line Road. The effluent limitations for these discharges to meet the NPDES requirements are sufficiently stringent to protect groundwater quality.

4. Effluent and Receiving Water Characterization Study.
An effluent and receiving water monitoring study is required to ensure adequate information is available for the next permit renewal. During the third or fourth year of this permit term, the Discharger is required to conduct quarterly monitoring of the effluent at M-001 and M-002 and of the receiving water at R-001 for all priority pollutants and other constituents of concern as described in Attachment I. Dioxin and furan sampling shall be as described in Attachment J. In conducting this study, the Discharger shall adhere to the requirements found in Attachment E of this Order.

VIII. PUBLIC PARTICIPATION

The Central Valley Water Board has considered the issuance of WDR's that will serve as an NPDES permit for the Aerojet Groundwater Extraction and Treatment Systems. As a step in the WDR adoption process, the Central Valley Water Board staff has developed tentative WDR's and has encouraged public participation in the WDR adoption process.

A. Notification of Interested Parties

The Central Valley Water Board notified the Discharger and interested agencies and persons of its intent to prescribe WDR's for the discharge and provided an opportunity to submit written comments and recommendations. Notification was provided through the following posting at the Rancho Cordova City Hall and via web posting.

The public had access to the agenda and any changes in dates and locations through the Central Valley Water Board's website at:
www.waterboards.ca.gov/centralvalley

B. Written Comments

Interested persons were invited to submit written comments concerning tentative WDR's as provided through the notification process. Comments were due either in person or by mail to the Executive Office at the Central Valley Water Board at 11020 Sun Center Drive, Suite 200, Rancho Cordova.

To be fully responded to by staff and considered by the Central Valley Water Board, the written comments were due at the Central Valley Water Board office by 5:00 p.m. on 1 October 2013.

C. Public Hearing

The **Central Valley Water Board** held a public hearing on the tentative WDR's during its regular Board meeting on the following date and time and at the following location:

Date:	5 and 6 December 2013: 9:00 a.m.
Location:	Regional Water Quality Control Board, Central Valley Region 11020 Sun Center Dr., Suite #200 Rancho Cordova, CA 95670

Interested persons were invited to attend. At the public hearing, the Central Valley Water Board heard testimony pertinent to the discharge, WDR's, and permit. For accuracy of the record, important testimony was requested in writing.

D. Reconsideration of Waste Discharge Requirements

Any aggrieved person may petition the State Water Board to review the decision of the Central Valley Water Board regarding the final WDR's. The petition must be received by the State Water Board at the following address within 30 calendar days of the Central Valley Water Board's action:

State Water Resources Control Board
Office of Chief Counsel
P.O. Box 100, 1001 I Street
Sacramento, CA 95812-0100

For instructions on how to file a petition for review, see
http://www.waterboards.ca.gov/public_notices/petitions/water_quality/wqpetition_instr.shtml

E. Information and Copying

The Report of Waste Discharge, other supporting documents, and comments received are on file and may be inspected at the address above at any time between 8:30 a.m. and 4:45 p.m., Monday through Friday. Copying of documents may be arranged through the Central Valley Water Board by calling (916) 464-3291.

F. Register of Interested Persons

Any person interested in being placed on the mailing list for information regarding the WDR's and NPDES permit should contact the Central Valley Water Board, reference this facility, and provide a name, address, and phone number.

G. Additional Information

Requests for additional information or questions regarding this order should be directed to Alexander MacDonald at (916) 464-4625 or amacdonald@waterboards.ca.gov.

ATTACHMENT G – SUMMARY OF REASONABLE POTENTIAL ANALYSIS FOR CONSTITUENTS OF CONCERN

Constituent	Units	MEC	B	C	CMC	CCC	Water & Org	Org. Only	Basin Plan	MCL	Reasonable Potential
Perchlorate	µg/L	6.8	<4		6					6	Y
NDMA	µg/L	0.0024	<0.002		0.003						Y
Copper	µg/L	6.3	<2		11	7.7	1300			1300	N
Mercury	µg/L	<0.001	<0.001							2	N
Nickel	µg/L	13			390	43	610	4600		100	N
Zinc	µg/L	42			150	150	7400	26000		5000	N
Barium	µg/L	90					1000			1000	N
Iron	µg/L	55								300	N
Manganese	µg/L	<5						100		50	N
Chloride	mg/L	13			860	230				250	N
Nitrate	mg/L	0.8	<0.5					10		10	N
Sulfate	mg/L	12								250	N
Electrical Conductivity	µmhos/cm	210								900	N

General Note: All inorganic concentrations are given as a total recoverable.
MEC = Maximum Effluent Concentration
B = Maximum Receiving Water Concentration or lowest detection level, if non-detect
C = Criterion used for Reasonable Potential Analysis
CMC = Criterion Maximum Concentration (CTR or NTR)
CCC = Criterion Continuous Concentration (CTR or NTR)
Water & Org = Human Health Criterion for Consumption of Water & Organisms (CTR or NTR)
Org. Only = Human Health Criterion for Consumption of Organisms Only (CTR or NTR)
Basin Plan = Numeric Site-specific Basin Plan Water Quality Objective
MCL = Drinking Water Standards Maximum Contaminant Level
NA = Not Available
ND = Non-detect

Footnotes:
(1)
(2)

ATTACHMENT H – EFFLUENT AND RECEIVING WATER CHARACTERIZATION STUDY

I. Background. Sections 2.4.1 through 2.4.4 of the SIP provide minimum standards for analyses and reporting. (Copies of the SIP may be obtained from the State Water Resources Control Board, or downloaded from http://www.waterboards.ca.gov/iswp/index.html). To implement the SIP, effluent and receiving water data are needed for all priority pollutants. Effluent and receiving water pH and hardness are required to evaluate the toxicity of certain priority pollutants (such as heavy metals) where the toxicity of the constituents varies with pH and/or hardness. Section 3 of the SIP prescribes mandatory monitoring of dioxin congeners. In addition to specific requirements of the SIP, the Central Valley Water Board is requiring the following monitoring:

A. Drinking water constituents. Constituents for which drinking water Maximum Contaminant Levels (MCLs) have been prescribed in the California Code of Regulation are included in the *Water Quality Control Plan, Fourth Edition, for the Sacramento and San Joaquin River Basins* (Basin Plan). The Basin Plan defines virtually all surface waters within the Central Valley Region as having existing or potential beneficial uses for municipal and domestic supply. The Basin Plan further requires that, at a minimum, water designated for use as domestic or municipal supply shall not contain concentrations of chemical constituents in excess of the MCLs contained in the California Code of Regulations.

B. Effluent and receiving water temperature. This is both a concern for application of certain temperature-sensitive constituents, such as fluoride, and for compliance with the Basin Plan's thermal discharge requirements.

C. Effluent and receiving water hardness and pH. These are necessary because several of the CTR constituents are hardness and pH dependent.

D. Dioxin and furan sampling. Section 3 of the SIP has specific requirements for the collection of samples for analysis of dioxin and furan congeners, which are detailed in Attachment J. Briefly, dischargers classified as minor must collect and analyze one wet season and one dry season sample. Pursuant to Section 13267 of the California Water Code, this Order includes a requirement for the Discharger to submit monitoring data for the effluent and receiving water as described in Attachment I.

II. Monitoring Requirements.

A. Quarterly Monitoring. Quarterly priority pollutant samples shall be collected from the effluent and upstream receiving water (M-001, M-002 and R-001) and analyzed for the constituents listed in Table I-1. Quarterly monitoring shall be conducted for 1 year (4 consecutive samples, evenly distributed throughout the year) and the results of such monitoring be submitted to the Central Valley Water Board, during the fourth year of the permit term. Each individual monitoring event shall provide representative sample results for the effluent and upstream receiving water.

B. Semi-annual Monitoring (dioxins and furans only). Semi-annual monitoring is required for dioxins and furans, as specified in Attachment I. The results of dioxin and furan monitoring shall be submitted to the Central Valley Water Board with the quarterly priority data at the completion of the Effluent and Receiving Water Characterization Study, and during the fourth year of the permit term.

C. Concurrent Sampling. Effluent and receiving water sampling shall be performed at approximately the same time, on the same date.

D. Sample type. All effluent samples shall be taken as 24-hour flow proportioned composite samples. All receiving water samples shall be taken as grab samples.

E. Additional Monitoring/Reporting Requirements. The Discharger shall conduct the monitoring and reporting in accordance with the General Monitoring Provisions and Reporting Requirements in Attachment E.

Table I-1. Priority Pollutants and Other Constituents of Concern

CTR #	Constituent	CAS Number	Practice Quantitation Level[1] µg/L or noted
28	1,1-Dichloroethane	75343	0.5
30	1,1-Dichloroethene	75354	0.5
41	1,1,1-Trichloroethane	71556	0.5
42	1,1,2-Trichloroethane	79005	0.5
37	1,1,2,2-Tetrachloroethane	79345	0.5
75	1,2-Dichlorobenzene	95501	0.5
29	1,2-Dichloroethane	107062	0.5
	cis-1,2-Dichloroethene	156592	0.5
31	1,2-Dichloropropane	78875	0.5
101	1,2,4-Trichlorobenzene	120821	1
76	1,3-Dichlorobenzene	541731	0.5
32	1,3-Dichloropropene	542756	0.5
77	1,4-Dichlorobenzene	106467	0.5
17	Acrolein	107028	2
18	Acrylonitrile	107131	2
19	Benzene	71432	0.5
20	Bromoform	75252	0.5
34	Bromomethane	74839	0.5
21	Carbon tetrachloride	56235	0.5
22	Chlorobenzene (mono chlorobenzene)	108907	0.5
24	Chloroethane	75003	0.5
25	2- Chloroethyl vinyl ether	110758	1
26	Chloroform	67663	0.5

[1] The reporting levels required in these tables for priority pollutant constituents are established based on Section 2.4.2 and Appendix 4 of the SIP.

CTR #	Constituent	CAS Number	Practice Quantitation Level[1] µg/L or noted
35	Chloromethane	74873	0.5
23	Dibromochloromethane	124481	0.5
27	Dichlorobromomethane	75274	0.5
36	Dichloromethane	75092	2
33	Ethylbenzene	100414	0.5
88	Hexachlorobenzene	118741	1
89	Hexachlorobutadiene	87683	0.5
91	Hexachloroethane	67721	1
94	Naphthalene	91203	10
38	Tetrachloroethene	127184	0.5
39	Toluene	108883	2
40	trans-1,2-Dichloroethylene	156605	0.5
43	Trichloroethene	79016	0.5
44	Vinyl chloride	75014	0.5
	Methyl-tert-butyl ether (MTBE)	1634044	
	Trichlorofluoromethane	75694	
	1,1,2-Trichloro-1,2,2-Trifluoroethane	76131	5
	Styrene	100425	0.5
	Xylenes	1330207	0.5
60	1,2-Benzanthracene	56553	5
85	1,2-Diphenylhydrazine	122667	1
45	2-Chlorophenol	95578	5
46	2,4-Dichlorophenol	120832	5
47	2,4-Dimethylphenol	105679	2
49	2,4-Dinitrophenol	51285	5
82	2,4-Dinitrotoluene	121142	5
55	2,4,6-Trichlorophenol	88062	10
83	2,6-Dinitrotoluene	606202	5
50	2-Nitrophenol	25154557	10
71	2-Chloronaphthalene	91587	10
78	3,3'-Dichlorobenzidine	91941	5
62	3,4-Benzofluoranthene	205992	10
52	4-Chloro-3-methylphenol	59507	5
48	4,6-Dinitro-2-methylphenol	534521	10
51	4-Nitrophenol	100027	10

CTR #	Constituent	CAS Number	Practice Quantitation Level[1] µg/L or noted
69	4-Bromophenyl phenyl ether	101553	10
72	4-Chlorophenyl phenyl ether	7005723	5
56	Acenaphthene	83329	1
57	Acenaphthylene	208968	10
58	Anthracene	120127	10
59	Benzidine	92875	5
61	Benzo(a)pyrene (3,4-Benzopyrene)	50328	2
63	Benzo(g,h,i)perylene	191242	5
64	Benzo(k)fluoranthene	207089	2
65	Bis(2-chloroethoxy) methane	111911	5
66	Bis(2-chloroethyl) ether	111444	1
67	Bis(2-chloroisopropyl) ether	39638329	10
68	Bis(2-ethylhexyl) phthalate	117817	5
70	Butyl benzyl phthalate	85687	10
73	Chrysene	218019	5
81	Di-n-butylphthalate	84742	10
84	Di-n-octylphthalate	117840	10
74	Dibenzo(a,h)-anthracene	53703	0.1
79	Diethyl phthalate	84662	10
80	Dimethyl phthalate	131113	10
86	Fluoranthene	206440	10
87	Fluorene	86737	10
90	Hexachlorocyclopentadiene	77474	5
92	Indeno(1,2,3-c,d)pyrene	193395	0.05
93	Isophorone	78591	1
98	N-Nitrosodiphenylamine	86306	0.002
96	N-Nitrosodimethylamine	62759	0.002
97	N-Nitrosodi-n-propylamine	621647	0.002
95	Nitrobenzene	98953	10
53	Pentachlorophenol	87865	1
99	Phenanthrene	85018	5
54	Phenol	108952	1
100	Pyrene	129000	10
	Aluminum	7429905	
1	Antimony	7440360	5

CTR #	Constituent	CAS Number	Practice Quantitation Level[1] µg/L or noted
2	Arsenic	7440382	1
15	Asbestos	1332214	
	Barium	7440393	
3	Beryllium	7440417	2
4	Cadmium	7440439	0.25
5a	Chromium (III)	7440473	2
5b	Chromium (VI)	18540299	1
6	Copper	7440508	0.5
14	Cyanide	57125	5
	Fluoride	7782414	
	Iron	7439896	
7	Lead	7439921	0.5
8	Mercury	7439976	0.5
	Manganese	7439965	
	Molybdenum	7439987	
9	Nickel	7440020	5
10	Selenium	7782492	5
11	Silver	7440224	1
12	Thallium	7440280	1
	Tributyltin	688733	
13	Zinc	7440666	10
110	4,4'-DDD	72548	0.05
109	4,4'-DDE	72559	0.05
108	4,4'-DDT	50293	0.01
112	alpha-Endosulfan	959988	0.02
103	alpha-Hexachlorocyclohexane (BHC)	319846	0.01
	Alachlor	15972608	
102	Aldrin	309002	0.005
113	beta-Endosulfan	33213659	0.01
104	beta-Hexachlorocyclohexane	319857	0.005
107	Chlordane	57749	0.1
106	delta-Hexachlorocyclohexane	319868	0.005
111	Dieldrin	60571	0.01
114	Endosulfan sulfate	1031078	0.05
115	Endrin	72208	0.01

CTR #	Constituent	CAS Number	Practice Quantitation Level[1] µg/L or noted
116	Endrin Aldehyde	7421934	0.01
117	Heptachlor	76448	0.01
118	Heptachlor Epoxide	1024573	0.01
105	Lindane (gamma-Hexachlorocyclohexane)	58899	0.02
119	PCB-1016	12674112	0.5
120	PCB-1221	11104282	0.5
121	PCB-1232	11141165	0.5
122	PCB-1242	53469219	0.5
123	PCB-1248	12672296	0.5
124	PCB-1254	11097691	0.5
125	PCB-1260	11096825	0.5
126	Toxaphene	8001352	0.5
	Atrazine	1912249	
	Bentazon	25057890	
	Carbofuran	1563662	
	2,4-D	94757	
	Dalapon	75990	
	1,2-Dibromo-3-chloropropane (DBCP)	96128	
	Di(2-ethylhexyl)adipate	103231	
	Dinoseb	88857	
	Diquat	85007	
	Endothal	145733	
	Ethylene Dibromide	106934	
	Glyphosate	1071836	
	Methoxychlor	72435	
	Molinate (Ordram)	2212671	
	Oxamyl	23135220	
	Picloram	1918021	
	Simazine (Princep)	122349	
	Thiobencarb	28249776	
16	2,3,7,8-TCDD (Dioxin)	1746016	
	2,4,5-TP (Silvex)	93765	
	Diazinon	333415	0.015 µg/L*
	Chlorpyrifos	2921882	0.014 µg/L*

CTR #	Constituent	CAS Number	Practice Quantitation Level[1] µg/L or noted
	Ammonia (as N)	7664417	
	Boron	7440428	
	Chloride	16887006	
	Flow		
	Hardness (as $CaCO_3$)		
	Foaming Agents (MBAS)		
	Mercury, Methyl	22967926	0.06 ng/L*
	Nitrate (as N)	14797558	2,000
	Nitrite (as N)	14797650	400
	pH		0.1
	Phosphorus, Total (as P)	7723140	
	Specific conductance (EC)		
	Sulfate		500
	Sulfide (as S)		
	Sulfite (as SO_3)		
	Temperature		
	Total Disolved Solids (TDS)		

*Total Maximum Daily Load (TMDL) for this constituent, which requires a maximum RL to determine reasonable potential and determine compliance with the TMDL.

ATTACHMENT I – DIOXIN AND FURAN SAMPLING

The CTR includes criteria for 2,3,7,8-tetrachlorodibenzo-pdioxin (2,3,7,8-TCDD). In addition to this compound, there are many congeners of chlorinated dibenzodioxins (2,3,7,8-CDDs) and chlorinated dibenzofurans (2,3,7,8-CDFs) that exhibit toxic effects similar to those of 2,3,7,8-TCDD. The USEPA has published toxic equivalency factors (TEFs) for 17 of the congeners. The TEFs express the relative toxicities of the congeners compared to 2,3,7,8-TCDD (whose TEF equals 1.0). In June 1997, participants in a World Health Organization (WHO) expert meeting revised TEF values for 1,2,3,7,8-PentaCDD, OctaCDD, and OctaCDF. The current TEFs for the 17 congeners, which include the three revised values, are shown below:

Toxic Equivalency Factors (TEFs) for 2,3,7,8-TCDD Equivalents

Congener	TEF
2,3,7,8-TetraCDD	1
1,2,3,7,8-PentaCDD	1.0
1,2,3,4,7,8-HexaCDD	0.1
1,2,3,6,7,8-HexaCDD	0.1
1,2,3,7,8,9-HexaCDD	0.1
1,2,3,4,6,7,8-HeptaCDD	0.01
OctaCDD	0.0001
2,3,7,8-TetraCDF	0.1
1,2,3,7,8-PentaCDF	0.05
2,3,4,7,8-PentaCDF	0.5
1,2,3,4,7,8-HexaCDF	0.1
1,2,3,6,7,8-HexaCDF	0.1
1,2,3,7,8,9-HexaCDF	0.1
2,3,4,6,7,8-HexaCDF	0.1
1,2,3,4,6,7,8-HeptaCDF	0.01
1,2,3,4,7,8,9-HeptaCDF	0.01
OctaCDF	0.0001

The Discharger shall conduct effluent and receiving water monitoring for the 2,3,7,8-TCDD congeners listed above to assess the presence and amounts of the congeners being discharged and already present in the receiving water. Effluent and upstream receiving water shall be monitored for the presence of the 17 congeners once during dry weather and once during wet weather for 1 year within the term of the study.

The Discharger shall report, for each congener, the analytical results of the effluent and receiving water monitoring, including the quantifiable limit and the method detection limit, and the measured or estimated concentration.

In addition, the Discharger shall multiply each measured or estimated congener concentration by its respective TEF value and report the sum of these values.