CALIFORNIA REGIONAL WATER QUALITY CONTROL BOARD
CENTRAL VALLEY REGION

11020 Sun Center Drive, #200 Rancho Cordova, California 95670-6114
Phone (916) 464-3291 • Fax (916) 464-4645
http://www.waterboards.ca.gov/centralvalley

ORDER R5-2016-XXXX
NPDES NO. CA0085316

WASTE DISCHARGE REQUIREMENTS FOR THE CITY OF TURLOCK REGIONAL WATER QUALITY CONTROL FACILITY AND THE CITY OF MODESTO WATER QUALITY CONTROL FACILITY STANISLAUS COUNTY

The following Dischargers are subject to waste discharge requirements (WDR's) set forth in this Order:

Table 1. Discharger Information

Discharger	City of Turlock	City of Modesto
Name of Facility	Regional Water Quality Control Facility	Water Quality Control Facility
Facility Address	901 S. Walnut Road	1221 Sutter Avenue
	Turlock, CA 95380	Modesto, CA 95351
	Stanislaus County	Stanislaus County

Table 2. Discharge Location

Discharge Point	Effluent Description	Discharge Point Latitude (North)	Discharge Point Longitude (West)	Receiving Water
002	Treated Municipal Wastewater	37º 29' 37"	121º 11' 40"	Delta-Mendota Canal

Table 3. Administrative Information

This Order was adopted on:	**18/19 February 2016**
This Order shall become effective on:	**1 April 2016**
This Order shall expire on:	**31 March 2021**
The City of Turlock and City of Modesto shall separately file Reports of Waste Discharge as application for reissuance of WDR's in accordance with title 23, California Code of Regulations, and application for reissuance of a National Pollutant Discharge Elimination System (NPDES) permit no later than:	**2 October 2020**
The U.S. Environmental Protection Agency (U.S. EPA) and the California Regional Water Quality Control Board, Central Valley Region have classified this discharge as follows:	Major

I, Pamela Creedon, Executive Officer, do hereby certify that this Order with all attachments is a full, true, and correct copy of the Order adopted by the California Regional Water Quality Control Board, Central Valley Region, on **18/19 February 2016**.

_____
PAMELA C. CREEDON, Executive Officer

CONTENTS

I. FACILITY INFORMATION 3
II. FINDINGS 3
III. DISCHARGE PROHIBITIONS 4
IV. EFFLUENT LIMITATIONS AND DISCHARGE SPECIFICATIONS 5
A. EFFLUENT LIMITATIONS – DISCHARGE POINT 002 5
1. FINAL EFFLUENT LIMITATIONS – CITY OF TURLOCK RWQCF 5
2. FINAL EFFLUENT LIMITATIONS – CITY OF MODESTO WQCF 6
B. LAND DISCHARGE SPECIFICATIONS – NOT APPLICABLE 8
C. RECYCLING SPECIFICATIONS – NOT APPLICABLE 8
V. RECEIVING WATER LIMITATIONS 8
A. SURFACE WATER LIMITATIONS 8
B. GROUNDWATER LIMITATIONS – NOT APPLICABLE 9
VI. PROVISIONS 10
A. STANDARD PROVISIONS 10
B. MONITORING AND REPORTING PROGRAM (MRP) REQUIREMENTS 13
C. SPECIAL PROVISIONS 13
1. REOPENER PROVISIONS 13
2. SPECIAL STUDIES, TECHNICAL REPORTS AND ADDITIONAL MONITORING REQUIREMENTS 15
3. BEST MANAGEMENT PRACTICES AND POLLUTION PREVENTION 17
4. CONSTRUCTION, OPERATION AND MAINTENANCE SPECIFICATIONS 17
5. SPECIAL PROVISIONS FOR MUNICIPAL FACILITIES (POTW'S ONLY) – NOT APPLICABLE 19
6. OTHER SPECIAL PROVISIONS 19
7. COMPLIANCE SCHEDULES – NOT APPLICABLE 19
VII. COMPLIANCE DETERMINATION 19

TABLES

TABLE 1. DISCHARGER INFORMATION 1
TABLE 2. DISCHARGE LOCATION 1
TABLE 3. ADMINISTRATIVE INFORMATION 1
TABLE 4. EFFLUENT LIMITATIONS – CITY OF TURLOCK RWQCF 5
TABLE 5. EFFLUENT LIMITATIONS – CITY OF MODESTO WQCF 6

ATTACHMENTS

ATTACHMENT A – DEFINITIONS A-1
ATTACHMENT B – MAPS B-1
ATTACHMENT C – FLOW SCHEMATICS C-1
ATTACHMENT D – STANDARD PROVISIONS D-1
ATTACHMENT E – MONITORING AND REPORTING PROGRAM E-1
ATTACHMENT F – FACT SHEET F-1
ATTACHMENT G – SUMMARY OF REASONABLE POTENTIAL ANALYSIS G-1
ATTACHMENT H – CALCULATION OF WQBEL'S H-1

I. FACILITY INFORMATION

Information describing the City of Turlock Regional Water Quality Control Facility (RWQCF) and the City of Modesto Water Quality Control Facility (WQCF) is summarized in Table 1 and in sections I and II of the Fact Sheet (Attachment F). Section I of the Fact Sheet also includes information regarding the Facility's permit application.

II. FINDINGS

The California Regional Water Quality Control Board, Central Valley Region (hereinafter Central Valley Water Board), finds:

A. Legal Authorities. This Order serves as WDR's pursuant to article 4, chapter 4, division 7 of the California Water Code (commencing with section 13260).This Order is also issued pursuant to section 402 of the federal Clean Water Act (CWA) and implementing regulations adopted by the U.S. EPA and chapter 5.5, division 7 of the Water Code (commencing with section 13370). It shall serve as an NPDES permit for point source discharges from this Facility to surface waters. This Order only regulates the surface water discharge from the Facilities to the Delta-Mendota Canal via the North Valley Regional Recycled Water Program Joint Outfall.

The City of Turlock owns and operates the City of Turlock, Regional Water Quality Control Facility (RWQCF), a POTW. The City of Modesto owns and operates the City of Modesto, Water Quality Control Facility (WQCF), a POTW. Together, the City of Turlock and the City of Modesto are hereinafter referred to as the Discharger and the City of Turlock RWQCF and the City of Modesto WQCF are hereinafter referred to collectively as the Facilities.

The City of Turlock RWQCF is also regulated by Order R5-2015-0027 (NPDES Permit No. CA0078948), which regulates the City of Turlock RWQCF's discharge to the San Joaquin River and also includes recycling specifications, groundwater limitations, emergency storage basin operating requirements, pretreatment requirements, and sludge/biosolids treatment or discharge specifications.

The City of Modesto is also regulated by Order R5-2012-0031 (NPDES Permit No. CA0079103), WDR Order 94-030, and WDR Order 99-112. Order R5-2012-0031 regulates the City of Modesto WQCF's discharge to the San Joaquin River and also includes pretreatment requirements. WDR Order 94-030 regulates the application of stabilized sludge as a soil amendment on the City of Modesto's 2,526 acre ranch. WDR Order 99-112 regulates the land application of cannery and secondary wastewaters to the ranch land.

B. Background and Rationale for Requirements. The Central Valley Water Board developed the requirements in this Order based on information submitted as part of the application, through monitoring and reporting programs, and other available information. The Fact Sheet (Attachment F), which contains background information and rationale for the requirements in this Order, is hereby incorporated into and constitutes Findings for this Order. Attachments A through E and G through H are also incorporated into this Order.

C. Monitoring and Reporting. 40 C.F.R. section 122.48 requires that all NPDES permits specify requirements for recording and reporting monitoring results. Water Code sections 13267 and 13383 authorize the Central Valley Water Board to require technical and monitoring reports. The Monitoring and Reporting Program establishes monitoring and reporting requirements to implement federal and State requirements. The Monitoring and Reporting Program is provided in Attachment E.

The technical and monitoring reports in this Order are required in accordance with Water Code section 13267, which states the following in subsection (b)(1), *"In conducting an investigation specified in subdivision (a), the regional board may require that any person who has discharged, discharges, or is suspected of having discharged discharging, or who proposes to discharge waste within its region, or any citizen or domiciliary, or political agency or entity of this state who has discharged, discharges, or is suspected of having discharged or discharging, or who proposes to discharge, waste outside of its region could affect the quality of waters within its region shall furnish, under penalty of perjury, technical or monitoring program reports which the regional board requires. The burden, including costs, of these reports shall bear a reasonable relationship to the need for the report and the benefits to be obtained from the reports. In requiring those reports, the regional board shall provide the person with a written explanation with regard to the need for the reports, and shall identify the evidence that supports requiring that person to provide the reports."*

The Discharger owns and operates the Facilities subject to this Order, specifically, the City of Turlock owns and operates the City of Turlock RWQCF and the City of Modesto owns and operates the City of Modesto WQCF. The monitoring reports required by this Order are necessary to determine compliance with this Order. The need for the monitoring reports is discussed in the Fact Sheet.

D. Notification of Interested Parties. The Central Valley Water Board has notified the Discharger and interested agencies and persons of its intent to prescribe WDR's for the discharge and has provided them with an opportunity to submit their written comments and recommendations. Details of the notification are provided in the Fact Sheet.

E. Consideration of Public Comment. The Central Valley Water Board, in a public meeting, heard and considered all comments pertaining to the discharge. Details of the Public Hearing are provided in the Fact Sheet.

THEREFORE, IT IS HEREBY ORDERED that in order to meet the provisions contained in division 7 of the Water Code (commencing with section 13000) and regulations adopted thereunder and the provisions of the CWA and regulations and guidelines adopted thereunder, the Discharger shall comply with the requirements in this Order.

III. DISCHARGE PROHIBITIONS

A. Discharge of wastewater from the Facilities, as the Facilities are specifically described in the Fact Sheet in section II.B, in a manner different from that described in this Order is prohibited.

B. The by-pass or overflow of wastes to surface waters is prohibited, except as allowed by Federal Standard Provisions I.G. and I.H. (Attachment D).

C. Neither the discharge nor its treatment shall create a nuisance as defined in section 13050 of the Water Code.

D. The discharge of tertiary treated wastewater at Discharge Point 002 is prohibited until the Discharger has complied with Special Provisions VI.C.4.e and the Executive Officer has authorized the initiation of discharge in writing.

IV. EFFLUENT LIMITATIONS AND DISCHARGE SPECIFICATIONS

A. Effluent Limitations – Discharge Point 002

1. Final Effluent Limitations – City of Turlock RWQCF

When discharging to the North Valley Regional Recycled Water Program Joint Outfall (Discharge Point 002), the City of Turlock RWQCF shall maintain compliance with the following effluent limitations with compliance measured at Monitoring Location EFF-001A as described in the Monitoring and Reporting Program, Attachment E. Compliance with the total coliform organisms effluent limitations shall be measured immediately after disinfection at Monitoring Location TCO-001.

a. The City of Turlock shall maintain compliance with the effluent limitations specified in Table 4:

Table 4. Effluent Limitations – City of Turlock RWQCF

Parameter	Units	Effluent Limitations				
		Average Monthly	Average Weekly	Maximum Daily	Instantaneous Minimum	Instantaneous Maximum
Conventional Pollutants						
Biochemical Oxygen Demand (5-day @ 20°C)	mg/L	10	15	20	--	--
	lbs/day[1]	1,200	1,800	2,400	--	--
pH	standard units	--	--	--	6.5	8.5
Total Suspended Solids	mg/L	10	15	20	--	--
	lbs/day[1]	1,200	1,800	2,400	--	--
Priority Pollutants						
Bis (2-ethylhexyl) Phthalate	µg/L	10	--	30	--	--
Chlorodibromomethane	µg/L	19	--	30	--	--
Dichlorobromomethane	µg/L	52	--	79	--	--
Non-Conventional Pollutants						
Aluminum, Total Recoverable	µg/L	330	710	--	--	--
Ammonia Nitrogen, Total (as N) (1 April – 30 September)	mg/L	0.85	1.5	--	--	--
	lbs/day[1]	100	180	--	--	--
Ammonia Nitrogen, Total (as N) (1 October – 31 March)	mg/L	1.6	2.8	--	--	--
	lbs/day[1]	190	330	--	--	--
Nitrate Plus Nitrite (as N)	mg/L	10	12	--	--	--

[1] Based on an average dry weather flow of 14.2 MGD.

b. **Percent Removal:** The average monthly percent removal of 5-day biochemical oxygen demand (BOD_5) and total suspended solids (TSS) shall not be less than 85 percent.

c. **Acute Whole Effluent Toxicity.** Survival of aquatic organisms in 96-hour bioassays of undiluted waste shall be no less than:

i. 70%, minimum for any one bioassay; and
ii. 90%, median for any three consecutive bioassays.

d. **Chronic Whole Effluent Toxicity.** There shall be no chronic toxicity in the effluent discharge.

e. **Total Residual Chlorine.** Effluent total residual chlorine shall not exceed:

i. 0.011 mg/L, as a 4-day average; and
ii. 0.019 mg/L, as a 1-hour average.

f. **Total Coliform Organisms.** Effluent total coliform organisms shall not exceed:

i. 2.2 most probable number (MPN) per 100 mL, as a 7-day median;
ii. 23 MPN/100 mL, more than once in any 30-day period; and
iii. 240 MPN/100 mL, at any time.

g. **Diazinon and Chlorpyrifos.** Effluent diazinon and chlorpyrifos concentrations shall not exceed the sum of one (1.0) as identified below:

i. **Average Monthly Effluent Limitation**

$$S_{AMEL} = \frac{C_{D\,M-avg}}{0.079} + \frac{C_{C\,M-avg}}{0.012} \leq 1.0$$

$C_{D\,M\text{-}avg}$ = average monthly diazinon effluent concentration in µg/L.
$C_{C\,M\text{-}avg}$ = average monthly chlorpyrifos effluent concentration in µg/L.

ii. **Average Weekly Effluent Limitation**

$$S_{AWEL} = \frac{C_{D\,W-avg}}{0.14} + \frac{C_{C\,W-avg}}{0.021} \leq 1.0$$

$C_{D\,W\text{-}avg}$ = average weekly diazinon effluent concentration in µg/L.
$C_{C\,W\text{-}avg}$ = average weekly chlorpyrifos effluent concentration in µg/L.

h. **Average Dry Weather Flow.** The average dry weather discharge flow from the City of Turlock RWQCF shall not exceed 14.2 MGD.

i. **Electrical Conductivity @ 25˚C.** The effluent calendar year annual average electrical conductivity shall not exceed 1,250 µmhos/cm.

j. **Mercury, total.** For a calendar year, the total annual mass discharge of total mercury shall not exceed 0.82 pounds/year.

2. Final Effluent Limitations – City of Modesto WQCF

When discharging to the North Valley Regional Recycled Water Program Joint Outfall (Discharge Point 002), the City of Modesto WQCF shall maintain compliance with the following effluent limitations with compliance measured at Monitoring Location EFF-001B as described in the Monitoring and Reporting Program, Attachment E. Compliance with the total coliform organisms effluent limitations shall be measured immediately after disinfection (i.e., at UVS-001 and UVS-002):

a. The City of Modesto shall maintain compliance with the effluent limitations specified in Table 5:

Table 5. Effluent Limitations – City of Modesto WQCF

Parameter	Units	Effluent Limitations				
		Average Monthly	Average Weekly	Maximum Daily	Instantaneous Minimum	Instantaneous Maximum
Conventional Pollutants						
Biochemical Oxygen Demand (5-day @ 20°C)	mg/L	10	15	20	--	--
	lbs/day[1]	1,200	1,900	2,500	--	--

Parameter	Units	Effluent Limitations				
		Average Monthly	Average Weekly	Maximum Daily	Instantaneous Minimum	Instantaneous Maximum
pH	standard units	--	--	--	6.5	8.5
Total Suspended Solids	mg/L	10	15	20	--	--
	lbs/day[1]	1,200	1,900	2,500	--	--
Non-Conventional Pollutants						
Ammonia Nitrogen, Total (as N) (1 April - 30 September)	mg/L	0.85	1.5	--	--	--
	lbs/day[1]	100	190	--	--	--
Ammonia Nitrogen, Total (as N) (1 October – 31 March)	mg/L	1.6	2.8	--	--	--
	lbs/day[1]	200	350	--	--	--
Nitrate Plus Nitrite (as N)	mg/L	10	19	--	--	--

[1] Based on a permitted flow of 14.9 MGD.

b. **Percent Removal:** The average monthly percent removal of BOD_5 and TSS shall not be less than 85 percent.

c. **Acute Whole Effluent Toxicity.** Survival of aquatic organisms in 96-hour bioassays of undiluted waste shall be no less than:

i. 70%, minimum for any one bioassay; and
ii. 90%, median for any three consecutive bioassays.

d. **Chronic Whole Effluent Toxicity.** There shall be no chronic toxicity in the effluent discharge.

e. **Total Coliform Organisms.** Effluent total coliform organisms shall not exceed:

i. 2.2 most probable number (MPN) per 100 mL, as a 7-day median;
ii. 23 MPN/100 mL, more than once in any 30-day period; and.
iii. 240 MPN/100 mL, at any time.

f. **Diazinon and Chlorpyrifos.** Effluent diazinon and chlorpyrifos concentrations shall not exceed the sum of one (1.0) as identified below:

i. **Average Monthly Effluent Limitation**

$$S_{AMEL} = \frac{C_{D\,M-avg}}{0.079} + \frac{C_{C\,M-avg}}{0.012} \leq 1.0$$

$C_{D\,M\text{-}avg}$ = average monthly diazinon effluent concentration in µg/L.
$C_{C\,M\text{-}avg}$ = average monthly chlorpyrifos effluent concentration in µg/L.

iii. **Average Weekly Effluent Limitation**

$$S_{AWEL} = \frac{C_{D\,W-avg}}{0.14} + \frac{C_{C\,W-avg}}{0.021} \leq 1.0$$

$C_{D\,W\text{-}avg}$ = average weekly diazinon effluent concentration in µg/L.
$C_{C\,W\text{-}avg}$ = average weekly chlorpyrifos effluent concentration in µg/L.

g. **Average Dry Weather Flow.** The average dry weather discharge flow from the City of Modesto WQCF shall not exceed 14.9 MGD.

h. **Electrical Conductivity @ 25˚C.** The effluent calendar year annual average electrical conductivity shall not exceed 1,250 µmhos/cm.

i. **Mercury, total.** For a calendar year, the total annual mass discharge of total mercury shall not exceed 1.162 pounds/year.

B. Land Discharge Specifications – Not Applicable

C. Recycling Specifications – Not Applicable

V. RECEIVING WATER LIMITATIONS

A. Surface Water Limitations

Discharges from the North Valley Regional Recycled Water Program Joint Outfall (Discharge Point 002) shall not cause the following in the Delta-Mendota Canal:

1. **Bacteria.** The fecal coliform concentration, based on a minimum of not less than five samples for any 30-day period, to exceed a geometric mean of 200 MPN/100 mL, nor more than 10 percent of the total number of fecal coliform samples taken during any 30-day period to exceed 400 MPN/100 mL.
2. **Biostimulatory Substances.** Water to contain biostimulatory substances which promote aquatic growths in concentrations that cause nuisance or adversely affect beneficial uses.
3. **Chemical Constituents.** Chemical constituents to be present in concentrations that adversely affect beneficial uses.
4. **Color.** Discoloration that causes nuisance or adversely affects beneficial uses.
5. **Dissolved Oxygen:**
   a. The monthly median of the mean daily dissolved oxygen concentration to fall below 85 percent of saturation in the main water mass;
   b. The 95 percentile dissolved oxygen concentration to fall below 75 percent of saturation; nor
   c. The dissolved oxygen concentration to be reduced below 5.0 mg/L at any time.
6. **Floating Material.** Floating material to be present in amounts that cause nuisance or adversely affect beneficial uses.
7. **Oil and Grease.** Oils, greases, waxes, or other materials to be present in concentrations that cause nuisance, result in a visible film or coating on the surface of the water or on objects in the water, or otherwise adversely affect beneficial uses.
8. **pH.** The pH to be depressed below 6.5 nor raised above 8.5.
9. **Pesticides:**
   a. Pesticides to be present, individually or in combination, in concentrations that adversely affect beneficial uses;
   b. Pesticides to be present in bottom sediments or aquatic life in concentrations that adversely affect beneficial uses;
   c. Total identifiable persistent chlorinated hydrocarbon pesticides to be present in the water column at concentrations detectable within the accuracy of analytical methods approved by U.S. EPA or the Executive Officer;
   d. Pesticide concentrations to exceed those allowable by applicable antidegradation policies (see State Water Board Resolution No. 68-16 and 40 CFR 131.12.);

e. Pesticide concentrations to exceed the lowest levels technically and economically achievable;

f. Pesticides to be present in concentration in excess of the maximum contaminant levels (MCL's) set forth in CCR, Title 22, division 4, chapter 15; nor

g. Thiobencarb to be present in excess of 1.0 µg/L.

10. **Radioactivity:**

    a. Radionuclides to be present in concentrations that are harmful to human, plant, animal, or aquatic life nor that result in the accumulation of radionuclides in the food web to an extent that presents a hazard to human, plant, animal, or aquatic life.

    b. Radionuclides to be present in excess of the MCL's specified in Table 64442 of section 64442 and Table 64443 of section 64443 of Title 22 of the California Code of Regulations.

11. **Suspended Sediments.** The suspended sediment load and suspended sediment discharge rate of surface waters to be altered in such a manner as to cause nuisance or adversely affect beneficial uses.

12. **Settleable Substances.** Substances to be present in concentrations that result in the deposition of material that causes nuisance or adversely affects beneficial uses.

13. **Suspended Material.** Suspended material to be present in concentrations that cause nuisance or adversely affect beneficial uses.

14. **Taste and Odors.** Taste- or odor-producing substances to be present in concentrations that impart undesirable tastes or odors to fish flesh or other edible products of aquatic origin, or that cause nuisance, or otherwise adversely affect beneficial uses.

15. **Temperature.** The natural temperature to be increased by more than 5°F. Compliance to be determined based on the difference in temperature at Monitoring Locations DMC-001 and DMC-002.

16. **Toxicity.** Toxic substances to be present, individually or in combination, in concentrations that produce detrimental physiological responses in human, plant, animal, or aquatic life.

17. **Turbidity:**

    a. Shall not exceed 2 Nephelometric Turbidity Units (NTU) where natural turbidity is less than 1 NTU;

    b. Shall not increase more than 1 NTU where natural turbidity is between 1 and 5 NTUs;

    c. Shall not increase more than 20 percent where natural turbidity is between 5 and 50 NTUs;

    d. Shall not increase more than 10 NTU where natural turbidity is between 50 and 100 NTUs; nor

    e. Shall not increase more than 10 percent where natural turbidity is greater than 100 NTUs.

B. Groundwater Limitations – Not Applicable

VI. PROVISIONS

A. Standard Provisions

1. The Discharger shall comply with all Standard Provisions included in Attachment D.
2. The Discharger shall comply with the following provisions. In the event that there is any conflict, duplication, or overlap between provisions specified by this Order, the more stringent provision shall apply:

   a. If the Discharger's wastewater treatment plant is publicly owned or subject to regulation by California Public Utilities Commission, it shall be supervised and operated by persons possessing certificates of appropriate grade according to Title 23, CCR, division 3, chapter 26.

   b. After notice and opportunity for a hearing, this Order may be terminated or modified for cause, including, but not limited to:

      i. violation of any term or condition contained in this Order;

      ii. obtaining this Order by misrepresentation or by failing to disclose fully all relevant facts;

      iii. a change in any condition that requires either a temporary or permanent reduction or elimination of the authorized discharge; and

      iv. a material change in the character, location, or volume of discharge.

      The causes for modification include:

      i. *New regulations.* New regulations have been promulgated under section 405(d) of the CWA, or the standards or regulations on which the permit was based have been changed by promulgation of amended standards or regulations or by judicial decision after the permit was issued.

      ii. *Land application plans.* When required by a permit condition to incorporate a land application plan for beneficial reuse of sewage sludge, to revise an existing land application plan, or to add a land application plan.

      iii. *Change in sludge use or disposal practice.* Under 40 CFR section 122.62(a)(1), a change in the Discharger's sludge use or disposal practice is a cause for modification of the permit. It is cause for revocation and reissuance if the Discharger requests or agrees.

      The Central Valley Water Board may review and revise this Order at any time upon application of any affected person or the Central Valley Water Board's own motion.

   c. If a toxic effluent standard or prohibition (including any scheduled compliance specified in such effluent standard or prohibition) is established under section 307(a) of the CWA, or amendments thereto, for a toxic pollutant that is present in the discharge authorized herein, and such standard or prohibition is more stringent than any limitation upon such pollutant in this Order, the Central Valley Water Board will revise or modify this Order in accordance with such toxic effluent standard or prohibition.

      The Discharger shall comply with effluent standards and prohibitions within the time provided in the regulations that establish those standards or prohibitions, even if this Order has not yet been modified.

   d. This Order shall be modified, or alternately revoked and reissued, to comply with any applicable effluent standard or limitation issued or approved under sections

301(b)(2)(C) and (D), 304(b)(2), and 307(a)(2) of the CWA, if the effluent standard or limitation so issued or approved:

i. Contains different conditions or is otherwise more stringent than any effluent limitation in the Order; or

ii. Controls any pollutant limited in the Order.

The Order, as modified or reissued under this paragraph, shall also contain any other requirements of the CWA then applicable.

e. The provisions of this Order are severable. If any provision of this Order is found invalid, the remainder of this Order shall not be affected.

f. The Discharger shall take all reasonable steps to minimize any adverse effects to waters of the State or users of those waters resulting from any discharge or sludge use or disposal in violation of this Order. Reasonable steps shall include such accelerated or additional monitoring as necessary to determine the nature and impact of the non-complying discharge or sludge use or disposal.

g. The Discharger shall ensure compliance with any existing or future pretreatment standard promulgated by U.S. EPA under section 307 of the CWA, or amendment thereto, for any discharge to the municipal system.

h. A copy of this Order shall be maintained at the discharge facility and be available at all times to operating personnel. Key operating personnel shall be familiar with its content.

i. Safeguard to electric power failure:

i. The Discharger shall provide safeguards to assure that, should there be reduction, loss, or failure of electric power, the discharge shall comply with the terms and conditions of this Order.

ii. Upon written request by the Central Valley Water Board, the Discharger shall submit a written description of safeguards. Such safeguards may include alternate power sources, standby generators, retention capacity, operating procedures, or other means. A description of the safeguards provided shall include an analysis of the frequency, duration, and impact of power failures experienced over the past 5 years on effluent quality and on the capability of the Discharger to comply with the terms and conditions of the Order. The adequacy of the safeguards is subject to the approval of the Central Valley Water Board.

iii. Should the treatment works not include safeguards against reduction, loss, or failure of electric power, or should the Central Valley Water Board not approve the existing safeguards, the Discharger shall, within 90 days of having been advised in writing by the Central Valley Water Board that the existing safeguards are inadequate, provide to the Central Valley Water Board and U.S. EPA a schedule of compliance for providing safeguards such that in the event of reduction, loss, or failure of electric power, the Discharger shall comply with the terms and conditions of this Order. The schedule of compliance shall, upon approval of the Central Valley Water Board, become a condition of this Order.

j. The Discharger, upon written request of the Central Valley Water Board, shall file with the Board a technical report on its preventive (failsafe) and contingency (cleanup) plans for controlling accidental discharges, and for minimizing the effect of

such events. This report may be combined with that required under the Central Valley Water Board Standard Provision contained in section VI.A.2.i of this Order.

The technical report shall:

i. Identify the possible sources of spills, leaks, untreated waste by-pass, and contaminated drainage. Loading and storage areas, power outage, waste treatment unit outage, and failure of process equipment, tanks and pipes should be considered.

ii. Evaluate the effectiveness of present facilities and procedures and state when they became operational.

iii. Predict the effectiveness of the proposed facilities and procedures and provide an implementation schedule containing interim and final dates when they will be constructed, implemented, or operational.

The Central Valley Water Board, after review of the technical report, may establish conditions which it deems necessary to control accidental discharges and to minimize the effects of such events. Such conditions shall be incorporated as part of this Order, upon notice to the Discharger.

k. A publicly owned treatment works whose waste flow has been increasing, or is projected to increase, shall estimate when flows will reach hydraulic and treatment capacities of its treatment and disposal facilities. The projections shall be made in January, based on the last 3 years' average dry weather flows, peak wet weather flows and total annual flows, as appropriate. When any projection shows that capacity of any part of the facilities may be exceeded in 4 years, the Discharger shall notify the Central Valley Water Board by 31 January. A copy of the notification shall be sent to appropriate local elected officials, local permitting agencies and the press. Within 120 days of the notification, the Discharger shall submit a technical report showing how it will prevent flow volumes from exceeding capacity or how it will increase capacity to handle the larger flows. The Central Valley Water Board may extend the time for submitting the report.

l. The Discharger shall submit technical reports as directed by the Executive Officer. All technical reports required herein that involve planning, investigation, evaluation, or design, or other work requiring interpretation and proper application of engineering or geologic sciences, shall be prepared by or under the direction of persons registered to practice in California pursuant to California Business and Professions Code, sections 6735, 7835, and 7835.1. To demonstrate compliance with Title 16, CCR, sections 415 and 3065, all technical reports must contain a statement of the qualifications of the responsible registered professional(s). As required by these laws, completed technical reports must bear the signature(s) and seal(s) of the registered professional(s) in a manner such that all work can be clearly attributed to the professional responsible for the work.

m. The Central Valley Water Board is authorized to enforce the terms of this permit under several provisions of the Water Code, including, but not limited to, sections 13385, 13386, and 13387.

n. For publicly owned treatment works, prior to making any change in the point of discharge, place of use, or purpose of use of treated wastewater that results in a permanent decrease of flow in any portion of a watercourse, the Discharger must file a petition with the State Water Board, Division of Water Rights, and receive approval for such a change. (Water Code section 1211).

o. In the event of any change in control or ownership of land or waste discharge facilities presently owned or controlled by the Discharger, the Discharger shall notify the succeeding owner or operator of the existence of this Order by letter, a copy of which shall be immediately forwarded to the Central Valley Water Board.

To assume operation under this Order, the succeeding owner or operator must apply in writing to the Executive Officer requesting transfer of the Order. The request must contain the requesting entity's full legal name, the state of incorporation if a corporation, address and telephone number of the persons responsible for contact with the Central Valley Water Board and a statement. The statement shall comply with the signatory and certification requirements in the federal Standard Provisions (Attachment D, section V.B) and state that the new owner or operator assumes full responsibility for compliance with this Order. Failure to submit the request shall be considered a discharge without requirements, a violation of the Water Code. Transfer shall be approved or disapproved in writing by the Executive Officer.

p. Failure to comply with provisions or requirements of this Order, or violation of other applicable laws or regulations governing discharges from this facility, may subject the Discharger to administrative or civil liabilities, criminal penalties, and/or other enforcement remedies to ensure compliance. Additionally, certain violations may subject the Discharger to civil or criminal enforcement from appropriate local, state, or federal law enforcement entities.

q. In the event the Discharger does not comply or will be unable to comply for any reason, with any prohibition, effluent limitation, or receiving water limitation of this Order, the Discharger shall notify the Central Valley Water Board by telephone (916) 464-3291 within 24 hours of having knowledge of such noncompliance, and shall confirm this notification in writing within five days, unless the Central Valley Water Board waives confirmation. The written notification shall state the nature, time, duration, and cause of noncompliance, and shall describe the measures being taken to remedy the current noncompliance and prevent recurrence including, where applicable, a schedule of implementation. Other noncompliance requires written notification as above at the time of the normal monitoring report.

B. Monitoring and Reporting Program (MRP) Requirements

The Discharger shall comply with the MRP, and future revisions thereto, in Attachment E.

C. Special Provisions

1. Reopener Provisions

a. Conditions that necessitate a major modification of a permit are described in 40 CFR section 122.62, including, but not limited to:

i. If new or amended applicable water quality standards are promulgated or approved pursuant to section 303 of the CWA, or amendments thereto, this permit may be reopened and modified in accordance with the new or amended standards.

ii. When new information, that was not available at the time of permit issuance, would have justified different permit conditions at the time of issuance.

b. This Order may be reopened for modification, or revocation and reissuance, as a result of the detection of a reportable priority pollutant generated by special conditions included in this Order. These special conditions may be, but are not

limited to, fish tissue sampling, whole effluent toxicity, monitoring requirements on internal waste stream(s), and monitoring for surrogate parameters. Additional requirements may be included in this Order as a result of the special condition monitoring data.

c. **Mercury.** If mercury is found to be causing toxicity based on acute or chronic toxicity test results, or if a TMDL program is adopted, this Order shall be reopened and an effluent mass or concentration limitation imposed. If the Central Valley Water Board determines that a mercury offset program is feasible for Dischargers subject to a NPDES permit, then this Order may be reopened to reevaluate the need for a mercury offset program for the Discharger.

d. **Whole Effluent Toxicity.** As a result of a Toxicity Reduction Evaluation (TRE), this Order may be reopened to include a numeric chronic toxicity limitation, a new acute toxicity limitation, and/or a limitation for a specific toxicant identified in the TRE. Additionally, if the State Water Board revises the SIP's toxicity control provisions that would require the establishment of numeric chronic toxicity effluent limitations, this Order may be reopened to include a numeric chronic toxicity effluent limitation based on the new provisions.

e. **Water Effects Ratios (WER) and Metal Translators.** A default WER of 1.0 has been used in this Order for calculating criteria for applicable inorganic constituents. In addition, default dissolved-to-total metal translators have been used to convert water quality objectives from dissolved to total. If the Discharger performs studies to determine site-specific WERs and/or site-specific dissolved-to-total metal translators, this Order may be reopened to modify the effluent limitations for the applicable inorganic constituents.

f. **Delta Nutrient Research Plan.** As part of its 2014 Delta Strategic Work Plan, the Central Valley Water Board is implementing the Delta Nutrient Research Plan to evaluate the need for nutrient objectives to protect beneficial uses of the Delta. If applicable nutrient objectives are adopted by the Central Valley Water Board this Order may be reopened to implement the objectives. In addition, this Order may be reopened to implement monitoring requirements needed to evaluate nutrient impacts downstream of the discharge.

g. **Ultraviolet (UV) Disinfection Operating Specifications.** The UV operating specifications for the City of Modesto WQCF in this Order are based on the UV guidelines developed by the National Water Research Institute (NWRI) and American Water Works Association Research Foundation (AWWARF) titled, "*Ultraviolet Disinfection Guidelines for Drinking Water and Water Reuse*" (NWRI Guidelines). If the City of Modesto conducts a site-specific UV engineering study that identifies site-specific UV operating specifications that will achieve the virus inactivation equivalent to Title 22 disinfected tertiary recycled water, this Order may be reopened to modify the UV operating specifications for the City of Modesto WQCF.

h. **City of Turlock RWQCF Flow Increase.** Upon completion of upgrades and expansions to the City of Turlock RWQCF, this Order may be reopened to increase the effluent flow limitation for the City of Turlock RWQCF to 25.4 MGD and revise the mass-based effluent limitations based on the increased effluent flow limitation. Additionally, if the City of Turlock submits information demonstrating that the discharge from the City of Turlock RWQCF can achieve compliance with all final effluent limitations at effluent flows greater than 14.2 MGD, this Order may be reopened to increase the effluent flow limitation up to the design capacity, revise

effluent limitations based on updated dilution credits, and revise the mass-based effluent limitations based on the increased effluent flow limitation.

i. **City of Modesto WQCF Flow Increase.** Upon completion of the phased upgrades and expansions to the City of Modesto WQCF, this Order may be reopened to increase the effluent flow limitation for the City of Modesto WQCF to 27.3 MGD and revise the mass-based effluent limitations based on the increased effluent flow limitation.

j. **Dilution Credits.** If the City of Turlock or City of Modesto request dilution credits for additional parameters and provides information supporting dilution credits, including demonstration that assimilative capacity is available and that the dilution credits are consistent with the requirements and guidance in Basin Plan, SIP (for CTR constituents), and U.S. EPA guidance, this Order may be reopened to modify the effluent limitations for the additional parameters.

k. **Electrical Conductivity (EC) Effluent Limits.** In order to facilitate the beneficial re-use of recycled water during drought periods, this Order may be reopened to revise the performance-based effluent limitations for EC should the Dischargers provide information demonstrating the increase in discharge concentrations have been caused by water conservation efforts and/or drought conditions.

2. Special Studies, Technical Reports and Additional Monitoring Requirements

a. **Toxicity Reduction Evaluation Requirements.** This provision applies separately to the City of Turlock RWQCF and the City of Modesto WQCF. For compliance with the Basin Plan's narrative toxicity objective, this Order requires chronic whole effluent toxicity (WET) testing separately for the City of Turlock RWQCF and the City of Modesto WQCF when discharging to the North Valley Regional Recycled Water Program Joint Outfall, as specified in Attachment E, MRP section V. Furthermore, this Provision requires an investigation of the cause(s) of toxicity, and identification of corrective actions to reduce or eliminate effluent toxicity. If the discharge from either facility exceeds the numeric toxicity monitoring trigger during accelerated monitoring established in this Provision, a Toxicity Reduction Evaluation (TRE) shall be initiated for the particular facility demonstrating toxicity in accordance with an approved TRE Work Plan, and actions shall be taken to mitigate the impact of the discharge and prevent recurrence of toxicity. A TRE is a site-specific study conducted in a stepwise process to identify the source(s) of toxicity and the effective control measures for effluent toxicity. TREs are designed to identify the causative agents and sources of whole effluent toxicity, evaluate the effectiveness of the toxicity control options, and confirm the reduction in effluent toxicity. This Provision includes procedures for accelerated chronic toxicity monitoring and TRE initiation.

i. **Accelerated Monitoring and TRE Initiation.** When the numeric toxicity monitoring trigger is exceeded during regular chronic toxicity monitoring, and the testing meets all test acceptability criteria, the Discharger shall initiate accelerated monitoring as required in the Accelerated Monitoring Specifications. The Discharger shall initiate a TRE to address effluent toxicity if any WET testing results exceed the numeric toxicity monitoring trigger during accelerated monitoring.

ii. **Numeric Toxicity Monitoring Trigger.** The numeric toxicity monitoring trigger to initiate a TRE is >1 TUc (where TUc = 100/NOEC). The monitoring trigger is not an effluent limitation; it is the toxicity threshold at which the Discharger is required to begin accelerated monitoring and initiate a TRE.

iii. **Accelerated Monitoring Specifications.** If the numeric toxicity monitoring trigger is exceeded during regular chronic toxicity testing, the Discharger shall initiate accelerated monitoring within 14-days of notification by the laboratory of the exceedance. Accelerated monitoring shall consist of four chronic toxicity tests conducted once every two weeks using the species that exhibited toxicity. The following protocol shall be used for accelerated monitoring and TRE initiation:

(a) If the results of four consecutive accelerated monitoring tests do not exceed the monitoring trigger, the Discharger may cease accelerated monitoring and resume regular chronic toxicity monitoring. However, notwithstanding the accelerated monitoring results, if there is adequate evidence of a pattern of effluent toxicity, the Executive Officer may require that the Discharger initiate a TRE.

(b) If the source(s) of the toxicity is easily identified (e.g., temporary plant upset), the Discharger shall make necessary corrections to the facility and shall continue accelerated monitoring until four consecutive accelerated tests do not exceed the monitoring trigger. Upon confirmation that the effluent toxicity has been removed, the Discharger may cease accelerated monitoring and resume regular chronic toxicity monitoring.

(c) If the result of any accelerated toxicity test exceeds the monitoring trigger, the Discharger shall cease accelerated monitoring and begin a TRE to investigate the cause(s) of, and identify corrective actions to reduce or eliminate effluent toxicity. Within thirty (30) days of notification by the laboratory of any test result exceeding the monitoring trigger during accelerated monitoring, the Discharger shall submit a TRE Action Plan to the Central Valley Water Board including, at minimum:

(1) Specific actions the Discharger will take to investigate and identify the cause(s) of toxicity, including a TRE WET monitoring schedule;

(2) Specific actions the Discharger will take to mitigate the impact of the discharge and prevent the recurrence of toxicity; and

(3) A schedule for these actions.

Within sixty (60) days of notification by the laboratory of the test results, the Discharger shall submit to the Central Valley Water Board a TRE Workplan for approval by the Executive Officer. The TRE Workplan shall outline the procedures for identifying the source(s) of, and reducing or eliminating effluent toxicity. The TRE Workplan must be developed in accordance with USEPA guidance[1].

Mixing Zone Validation Study. The City of Turlock shall conduct a mixing zone validation study following the commencement of discharges to the Delta-Mendota Canal to verify the results of the 20 October 2015 *North Valley Regional Recycled Water Project: Delta-Mendota Canal Mixing Zone Study*. A work plan and schedule for conducting the study shall be submitted to the Central Valley Water Board **within 120 days** after the initiation of the discharge to the Delta-Mendota Canal. The

[1] See the Fact Sheet (Attachment F section VI.B.2.a.) for a list of USEPA guidance documents that must be considered in development of the TRE Workplan.

mixing zone validation study shall be completed and submitted to the Central Valley Water Board **within 1 year** of submission of the work plan and schedule.

3. Best Management Practices and Pollution Prevention

a. **Salinity Source Control Programs.** The City of Turlock and City of Modesto shall separately continue to implement their Salinity Source Control Programs, and shall update them as necessary. Both the City of Turlock and City of Modesto shall separately provide annual reports demonstrating reasonable progress in the reduction of salinity in its discharge to the Delta-Mendota Canal. The annual reports shall be submitted in accordance with the Monitoring and Reporting Program (Attachment E, Section X.D.1, Table E-11 for City of Turlock RWQCF and Table E-12 for the City of Modesto WQCF).

b. **Bis (2-ethylhexyl) phthalate Pollutant Evaluation and Minimization Plan.** The City of Turlock shall develop a pollutant evaluation and minimization plan (PEMP) for bis (2-ethylhexyl) phthalate and submit the PEMP to the Central Valley Water Board by **1 November 2017**. The City of Turlock shall immediately implement the PEMP and provide a summary of the effectiveness of the PEMP to reduce bis (2-ethylhexyl) phthalate concentrations in the effluent with the Report of Waste Discharge, due 180 days prior to the permit expiration date. The PEMP shall include, at minimum, the following:

i. An estimate of all of the sources of bis (2-ethylhexyl) phthalate contributing, or potentially contributing, to the loadings of bis (2-ethylhexyl) phthalate in the City of Turlock RWQCF influent.

ii. An analysis of the methods that could be used to prevent the discharge of bis (2-ethylhexyl) phthalate into the Facility, including application of local limits to industrial or commercial dischargers regarding pollution prevention techniques, public education and outreach, or other innovative and alternative approaches to reduce discharges of bis (2-ethylhexyl) phthalate to the Facility. The analysis also shall identify sources, or potential sources, not within the ability or authority of the Discharger to control.

iii. An estimate of load reductions that may be attained through the methods identified in subparagraph ii.

iv. A plan for monitoring the results of the PEMP.

v. A description of the tasks, cost, and time required to investigate and implement various elements in the PEMP.

vi. A statement of the Discharger's pollution minimization goals and strategies, including priorities for short-term and long-term action, and a description of the Discharger's intended pollution minimization activities for the immediate future.

vii. An analysis, to the extent feasible, of the costs and benefits that may be incurred to implement the PEMP.

4. Construction, Operation and Maintenance Specifications

a. **City of Modesto WQCF Phase 2 Discharge.** The City of Modesto has requested to be permitted to discharge up to 14.9 MGD to the Delta-Mendota Canal upon completion of the Phase 2 upgrade and expansion project. The permitted discharge to the Delta-Mendota Canal is subject to compliance with the following conditions:

i. **Facility Improvements.** The Discharger shall have completed construction and startup of the Phase 2 upgrades with a design capacity of at least 14.9 MGD, as identified in section II.E of the Fact Sheet;

ii. **Design Approval.** The Discharger shall provide evidence, certified by the plant design engineer, that the plant is operating properly; and

iii. **Request for Flow Increase.** The Discharger shall notify the Executive Officer of its compliance with items i-ii, above. The tertiary discharge of up to 14.9 MGD shall not commence until the Executive Officer verifies compliance with Special Provision VI.C.4.a in writing. The Discharger must also comply with Special Provision VI.C.4.e, below, prior to initiation of discharge to the Delta-Mendota Canal.

b. **Filtration System Operating Specifications for the City of Turlock RWQCF.** To ensure the filtration system is operating properly to provide adequate disinfection of the wastewater, the turbidity of the filter effluent measured at EFF-001A shall not exceed:

i. 2 NTU as a daily average;
ii. 5 NTU more than 5 percent of the time within a 24-hour period; and
iii. 10 NTU, at any time.

c. **Filtration System Operating Specifications for the City of Modesto WQCF.** To ensure the filtration system is operating properly to provide adequate disinfection of the wastewater, the turbidity of the filter effluent measured at Monitoring Location FIL-001 and FIL-002 shall not exceed:

i. 0.2 NTU more than 5 percent of the time within a 24-hour period; and
ii. 0.5 NTU at any time.

d. **Ultraviolet (UV) Disinfection System Operating Specifications for the City of Modesto WQCF.** The UV disinfection system must be operated in accordance with an operations and maintenance program that assures adequate disinfection, and shall meet the following minimum specifications to provide virus inactivation equivalent to Title 22 Disinfected Tertiary Recycled Water:

i. **UV Dose.** The minimum hourly average UV dose in the UV reactor shall be 80 millijoules per square centimeter (mJ/cm^2).

ii. **UV Transmittance**. The minimum hourly average UV transmittance (at 254 nanometers) in the wastewater measured at UVS-001 and UVS-002 shall not fall below 65 percent.

iii. The lamp sleeves and cleaning system components must be visually inspected per the manufacturer's operations manual for physical wear (scoring, solarization, seal leaks, cleaning fluid levels, etc.) and to check the efficacy of the cleaning system.

iv. The lamp sleeves must be cleaned periodically as necessary to meet the UV dose requirements.

v. Lamps must be replaced per the manufacturer's operations manual, or sooner, if there are indications the lamps are failing to provide adequate disinfection. Lamp age and lamp replacement records must be maintained.

e. **Initiation of Surface Water Discharge.** The surface water discharge to the Delta-Mendota Canal from the Facilities is contingent upon compliance with the following conditions:

i. **Effluent Limitation and Receiving Water Limitation Compliance.** The Discharger shall demonstrate the effluent discharge will comply with the final effluent limitations and not cause violations of the receiving water limitations in sections IV.A and V.A, respectively. To meet this requirement the Discharger shall submit effluent data that adequately supports the demonstration of compliance.

ii. **Outfall Pipeline.** The Discharger shall have completed construction of an outfall pipeline to the Delta-Mendota Canal. The Discharger shall provide certification of completion by the design engineer.

iii. **Request for Surface Water Discharge.** The Discharger shall submit to the Central Valley Water Board a request for initiation of a surface water discharge to the Delta-Mendota Canal, which demonstrates compliance with items i and ii, above. The surface water discharge is prohibited until the Executive Officer verifies compliance with this provision and approves the Discharger's request in writing.

5. Special Provisions for Municipal Facilities (POTW's Only) – Not Applicable

6. Other Special Provisions

a. **Title 22, or Equivalent, Disinfection Requirements.** This provision is applicable to both the City of Turlock RWQCF and the City of Modesto WQCF. Wastewater discharged from the Facilities to the North Valley Regional Recycled Water Program Joint Outfall shall be oxidized, coagulated, filtered, and adequately disinfected pursuant to the State Water Board, Division of Drinking Water (DDW) reclamation criteria, CCR, Title 22, division 4, chapter 3, (Title 22), or equivalent.

7. Compliance Schedules – Not Applicable

VII. COMPLIANCE DETERMINATION

A. BOD_5 and TSS Effluent Limitations (Sections IV.A.1.a, IV.A.1.b, IV.A.2.a, and IV.A.2.b). Compliance with the final effluent limitations for BOD_5 and TSS required in Limitations and Discharge Requirements sections IV.A.1.a and IV.A.2.a shall be ascertained by 24-hour composite samples. Compliance with effluent limitations required in Limitations and Discharge Requirements sections IV.A.1.b and IV.A.2.b for percent removal shall be calculated using the arithmetic mean of BOD_5 and TSS in effluent samples collected over a monthly period as a percentage of the arithmetic mean of the values for influent samples collected at approximately the same times during the same period.

B. Aluminum Effluent Limitations (Section IV.A.1.a). Compliance with the final effluent limitations for aluminum can be demonstrated using either total or acid-soluble (inductively coupled plasma/atomic emission spectrometry or inductively coupled plasma/mass spectrometry) analysis methods, as supported by U.S. EPA's Ambient Water Quality Criteria for Aluminum document (EPA 440/5-86-008), or other standard methods that exclude aluminum silicate particles as approved by the Executive Officer.

C. Average Dry Weather Flow Effluent Limitations (Sections IV.A.1.h and IV.A.2.g). The average dry weather discharge flow represents the daily average flow when groundwater is at or near normal and runoff is not occurring. Compliance with the average dry weather flow effluent limitations will be determined annually based on the average daily flow over three consecutive dry weather months (e.g., July, August, and September).

D. Total Coliform Organisms Effluent Limitations (Sections IV.A.1.f and IV.A.2.e). For each day that an effluent sample is collected and analyzed for total coliform organisms, the 7-day

median shall be determined by calculating the median concentration of total coliform bacteria in the effluent utilizing the bacteriological results of the last 7 days. For example, if a sample is collected on a Wednesday, the result from that sampling event and all results from the previous 6 days (i.e., Tuesday, Monday, Sunday, Saturday, Friday, and Thursday) are used to calculate the 7-day median. If the 7-day median of total coliform organisms exceeds a most probable number (MPN) of 2.2 per 100 milliliters, the Discharger will be considered out of compliance.

E. Total Residual Chlorine Effluent Limitations (Section IV.A.1.e). Continuous monitoring analyzers for chlorine residual or for dechlorination agent residual in the effluent are appropriate methods for compliance determination. A positive residual dechlorination agent in the effluent indicates that chlorine is not present in the discharge, which demonstrates compliance with the effluent limitations. This type of monitoring can also be used to prove that some chlorine residual exceedances are false positives. Continuous monitoring data showing either a positive dechlorination agent residual or a chlorine residual at or below the prescribed limit are sufficient to show compliance with the total residual chlorine effluent limitations, as long as the instruments are maintained and calibrated in accordance with the manufacturer's recommendations.

Any excursion above the 1-hour average or 4-day average total residual chlorine effluent limitations is a violation. If the Discharger conducts continuous monitoring and the Discharger can demonstrate, through data collected from a back-up monitoring system, that a chlorine spike recorded by the continuous monitor was not actually due to chlorine, then any excursion resulting from the recorded spike will not be considered an exceedance, but rather reported as a false positive. Records supporting validation of false positives shall be maintained in accordance with Section IV Standard Provisions (Attachment D).

F. Mass Effluent Limitations. The mass effluent limitations contained in the Final Effluent Limitations IV.A.1.a and IV.A.2.a are based on the permitted average dry weather flow and calculated as follows:

Mass (lbs/day) = Flow (MGD) x Concentration (mg/L) x 8.34 (conversion factor)

If the effluent flow exceeds the permitted average dry weather flow during wet-weather seasons, the effluent mass limitations contained in Final Effluent Limitations IV.A.1.a and IV.A.2.a shall not apply. If the effluent flow is below the permitted average dry weather flow during wet-weather seasons, the effluent mass limitations do apply.

G. Priority Pollutant Effluent Limitations. Compliance with effluent limitations for priority pollutants shall be determined in accordance with Section 2.4.5 of the SIP, as follows:

1. Dischargers shall be deemed out of compliance with an effluent limitation, if the concentration of the priority pollutant in the monitoring sample is greater than the effluent limitation and greater than or equal to the reporting level (RL).
2. Dischargers shall be required to conduct a Pollutant Minimization Program (PMP) in accordance with section 2.4.5.1 of the SIP when there is evidence that the priority pollutant is present in the effluent above an effluent limitation and either:
   a. A sample result is reported as detected, but not quantified (DNQ) and the effluent limitation is less than the RL; or
   b. A sample result is reported as non-detect (ND) and the effluent limitation is less than the method detection limit (MDL).
3. When determining compliance with an average monthly effluent limitation (AMEL) and more than one sample result is available in a month, the discharger shall compute the

arithmetic mean unless the data set contains one or more reported determinations of DNQ or ND. In those cases, the discharger shall compute the median in place of the arithmetic mean in accordance with the following procedure:

a. The data set shall be ranked from low to high, reported ND determinations lowest, DNQ determinations next, followed by quantified values (if any). The order of the individual ND or DNQ determinations is unimportant.

b. The median value of the data set shall be determined. If the data set has an odd number of data points, then the median is the middle value. If the data set has an even number of data points, then the median is the average of the two values around the middle unless one or both of the points are ND or DNQ, in which case the median value shall be the lower of the two data points where DNQ is lower than a value and ND is lower than DNQ.

4. If a sample result, or the arithmetic mean or median of multiple sample results, is below the RL, and there is evidence that the priority pollutant is present in the effluent above an effluent limitation and the discharger conducts a PMP (as described in section 2.4.5.1), the discharger shall not be deemed out of compliance.

H. Chronic Whole Effluent Toxicity Effluent Limitation (Section IV.A.1.d and IV.A.2.d). Compliance with the accelerated monitoring and TRE provisions of Provision VI.C.2.a shall constitute compliance with the effluent limitations.

I. Annual Average Effluent Limitations (Sections IV.A.1.i and IV.A.2.h). Compliance with the calendar year annual average effluent limitations for electrical conductivity shall be determined by calculating the sum of all daily discharges measured during a calendar year divided by the number of daily discharges measured during that year.

J. Chlorpyrifos and Diazinon Effluent Limitations (Sections IV.A.1.g and IV.A.2.f). Compliance shall be determined by calculating the sum (S), as provided in this Order, with analytical results that are reported as “non-detectable” concentrations to be considered to be zero.

K. Total Mercury Mass Loading Effluent Limitations (Section IV.A.1.j and IV.2.A.i). The procedures for calculating mass loadings are as follows:

1. The total pollutant mass load for each individual calendar month shall be determined using an average of all concentration data collected that month and the corresponding total monthly flow. All effluent monitoring data collected under the monitoring and reporting program, pretreatment program, and any special studies shall be used for these calculations. The total annual mass loading shall be the sum of the individual calendar months.

2. In calculating compliance, the Discharger shall count all non-detect measures at one-half of the detection level. If compliance with the effluent limitation is not attained due to the non-detect contribution, the Discharger shall improve and implement available analytical capabilities and compliance shall be evaluated with consideration of the detection limits.

ATTACHMENT A – DEFINITIONS

Arithmetic Mean (μ)
Also called the average, is the sum of measured values divided by the number of samples. For ambient water concentrations, the arithmetic mean is calculated as follows:

Arithmetic mean = $\mu = \Sigma x / n$ where: Σx is the sum of the measured ambient water concentrations, and n is the number of samples.

Average Monthly Effluent Limitation (AMEL)
The highest allowable average of daily discharges over a calendar month, calculated as the sum of all daily discharges measured during a calendar month divided by the number of daily discharges measured during that month.

Average Weekly Effluent Limitation (AWEL)
The highest allowable average of daily discharges over a calendar week (Sunday through Saturday), calculated as the sum of all daily discharges measured during a calendar week divided by the number of daily discharges measured during that week.

Bioaccumulative
Those substances taken up by an organism from its surrounding medium through gill membranes, epithelial tissue, or from food and subsequently concentrated and retained in the body of the organism.

Carcinogenic
Pollutants are substances that are known to cause cancer in living organisms.

Coefficient of Variation (CV)
CV is a measure of the data variability and is calculated as the estimated standard deviation divided by the arithmetic mean of the observed values.

Daily Discharge
Daily Discharge is defined as either: (1) the total mass of the constituent discharged over the calendar day (12:00 am through 11:59 pm) or any 24-hour period that reasonably represents a calendar day for purposes of sampling (as specified in the permit), for a constituent with limitations expressed in units of mass or; (2) the unweighted arithmetic mean measurement of the constituent over the day for a constituent with limitations expressed in other units of measurement (e.g., concentration).

The daily discharge may be determined by the analytical results of a composite sample taken over the course of one day (a calendar day or other 24-hour period defined as a day) or by the arithmetic mean of analytical results from one or more grab samples taken over the course of the day.

For composite sampling, if 1 day is defined as a 24-hour period other than a calendar day, the analytical result for the 24-hour period will be considered as the result for the calendar day in which the 24-hour period ends.

Detected, but Not Quantified (DNQ)
DNQ are those sample results less than the RL, but greater than or equal to the laboratory's MDL. Sample results reported as DNQ are estimated concentrations.

Dilution Credit
Dilution Credit is the amount of dilution granted to a discharge in the calculation of a water quality-based effluent limitation, based on the allowance of a specified mixing zone. It is calculated from the dilution ratio or determined through conducting a mixing zone study or modeling of the discharge and receiving water.

Effluent Concentration Allowance (ECA)
ECA is a value derived from the water quality criterion/objective, dilution credit, and ambient background concentration that is used, in conjunction with the coefficient of variation for the effluent monitoring data, to calculate a long-term average (LTA) discharge concentration. The ECA has the same meaning as waste load allocation (WLA) as used in U.S. EPA guidance (Technical Support Document For Water Quality-based Toxics Control, March 1991, second printing, EPA/505/2-90-001).

Enclosed Bays
Enclosed Bays means indentations along the coast that enclose an area of oceanic water within distinct headlands or harbor works. Enclosed bays include all bays where the narrowest distance between the headlands or outermost harbor works is less than 75 percent of the greatest dimension of the enclosed portion of the bay. Enclosed bays include, but are not limited to, Humboldt Bay, Bodega Harbor, Tomales Bay, Drake's Estero, San Francisco Bay, Morro Bay, Los Angeles-Long Beach Harbor, Upper and Lower Newport Bay, Mission Bay, and San Diego Bay. Enclosed bays do not include inland surface waters or ocean waters.

Estimated Chemical Concentration
The estimated chemical concentration that results from the confirmed detection of the substance by the analytical method below the ML value.

Estuaries
Estuaries means waters, including coastal lagoons, located at the mouths of streams that serve as areas of mixing for fresh and ocean waters. Coastal lagoons and mouths of streams that are temporarily separated from the ocean by sandbars shall be considered estuaries. Estuarine waters shall be considered to extend from a bay or the open ocean to a point upstream where there is no significant mixing of fresh water and seawater. Estuarine waters included, but are not limited to, the Sacramento-San Joaquin Delta, as defined in Water Code section 12220, Suisun Bay, Carquinez Strait downstream to the Carquinez Bridge, and appropriate areas of the Smith, Mad, Eel, Noyo, Russian, Klamath, San Diego, and Otay rivers. Estuaries do not include inland surface waters or ocean waters.

Inland Surface Waters
All surface waters of the state that do not include the ocean, enclosed bays, or estuaries.

Instantaneous Maximum Effluent Limitation
The highest allowable value for any single grab sample or aliquot (i.e., each grab sample or aliquot is independently compared to the instantaneous maximum limitation).

Instantaneous Minimum Effluent Limitation
The lowest allowable value for any single grab sample or aliquot (i.e., each grab sample or aliquot is independently compared to the instantaneous minimum limitation).

Maximum Daily Effluent Limitation (MDEL)
The highest allowable daily discharge of a pollutant, over a calendar day (or 24-hour period). For pollutants with limitations expressed in units of mass, the daily discharge is calculated as the total mass of the pollutant discharged over the day. For pollutants with limitations expressed in other units of measurement, the daily discharge is calculated as the arithmetic mean measurement of the pollutant over the day.

Median
The middle measurement in a set of data. The median of a set of data is found by first arranging the measurements in order of magnitude (either increasing or decreasing order). If the number of

measurements (n) is odd, then the median = $X_{(n+1)/2}$. If n is even, then the median = $(X_{n/2} + X_{(n/2)+1})/2$ (i.e., the midpoint between the n/2 and n/2+1).

Method Detection Limit (MDL)
MDL is the minimum concentration of a substance that can be measured and reported with 99 percent confidence that the analyte concentration is greater than zero, as defined in in 40 C.F.R. part 136, Attachment B, revised as of July 3, 1999.

Minimum Level (ML)
ML is the concentration at which the entire analytical system must give a recognizable signal and acceptable calibration point. The ML is the concentration in a sample that is equivalent to the concentration of the lowest calibration standard analyzed by a specific analytical procedure, assuming that all the method specified sample weights, volumes, and processing steps have been followed.

Mixing Zone
Mixing Zone is a limited volume of receiving water that is allocated for mixing with a wastewater discharge where water quality criteria can be exceeded without causing adverse effects to the overall water body.

Not Detected (ND)
Sample results which are less than the laboratory's MDL.

Ocean Waters
The territorial marine waters of the State as defined by California law to the extent these waters are outside of enclosed bays, estuaries, and coastal lagoons. Discharges to ocean waters are regulated in accordance with the State Water Board's California Ocean Plan.

Persistent Pollutants
Persistent pollutants are substances for which degradation or decomposition in the environment is nonexistent or very slow.

Pollutant Minimization Program (PMP)
PMP means waste minimization and pollution prevention actions that include, but are not limited to, product substitution, waste stream recycling, alternative waste management methods, and education of the public and businesses. The goal of the PMP shall be to reduce all potential sources of a priority pollutant(s) through pollutant minimization (control) strategies, including pollution prevention measures as appropriate, to maintain the effluent concentration at or below the water quality-based effluent limitation. Pollution prevention measures may be particularly appropriate for persistent bioaccumulative priority pollutants where there is evidence that beneficial uses are being impacted. The Central Valley Water Board may consider cost effectiveness when establishing the requirements of a PMP. The completion and implementation of a Pollution Prevention Plan, if required pursuant to Water Code section 13263.3(d), shall be considered to fulfill the PMP requirements.

Pollution Prevention
Pollution Prevention means any action that causes a net reduction in the use or generation of a hazardous substance or other pollutant that is discharged into water and includes, but is not limited to, input change, operational improvement, production process change, and product reformulation (as defined in Water Code section 13263.3). Pollution prevention does not include actions that merely shift a pollutant in wastewater from one environmental medium to another environmental medium, unless clear environmental benefits of such an approach are identified to the satisfaction of the State Water Resources Control Board (State Water Board) or Central Valley Water Board.

Satellite Collection System
The portion, if any, of a sanitary sewer system owned or operated by a different public agency than the agency that owns and operates the wastewater treatment facility that a sanitary sewer system is tributary to.

Source of Drinking Water
Any water designated as municipal or domestic supply (MUN) in a Central Valley Water Board Basin Plan.

Standard Deviation (σ)
Standard Deviation is a measure of variability that is calculated as follows:

$$\sigma = (\sum[(x - \mu)^2]/(n - 1))^{0.5}$$

where:
x is the observed value;
μ is the arithmetic mean of the observed values; and
n is the number of samples.

Toxicity Reduction Evaluation (TRE)
TRE is a study conducted in a step-wise process designed to identify the causative agents of effluent or ambient toxicity, isolate the sources of toxicity, evaluate the effectiveness of toxicity control options, and then confirm the reduction in toxicity. The first steps of the TRE consist of the collection of data relevant to the toxicity, including additional toxicity testing, and an evaluation of facility operations and maintenance practices, and best management practices. A Toxicity Identification Evaluation (TIE) may be required as part of the TRE, if appropriate. (A TIE is a set of procedures to identify the specific chemical(s) responsible for toxicity. These procedures are performed in three phases (characterization, identification, and confirmation) using aquatic organism toxicity tests.)

ATTACHMENT B – MAPS

Figure B-1: Facility Location Map.

Figure B-2: Map of Delta Mendota Canal.

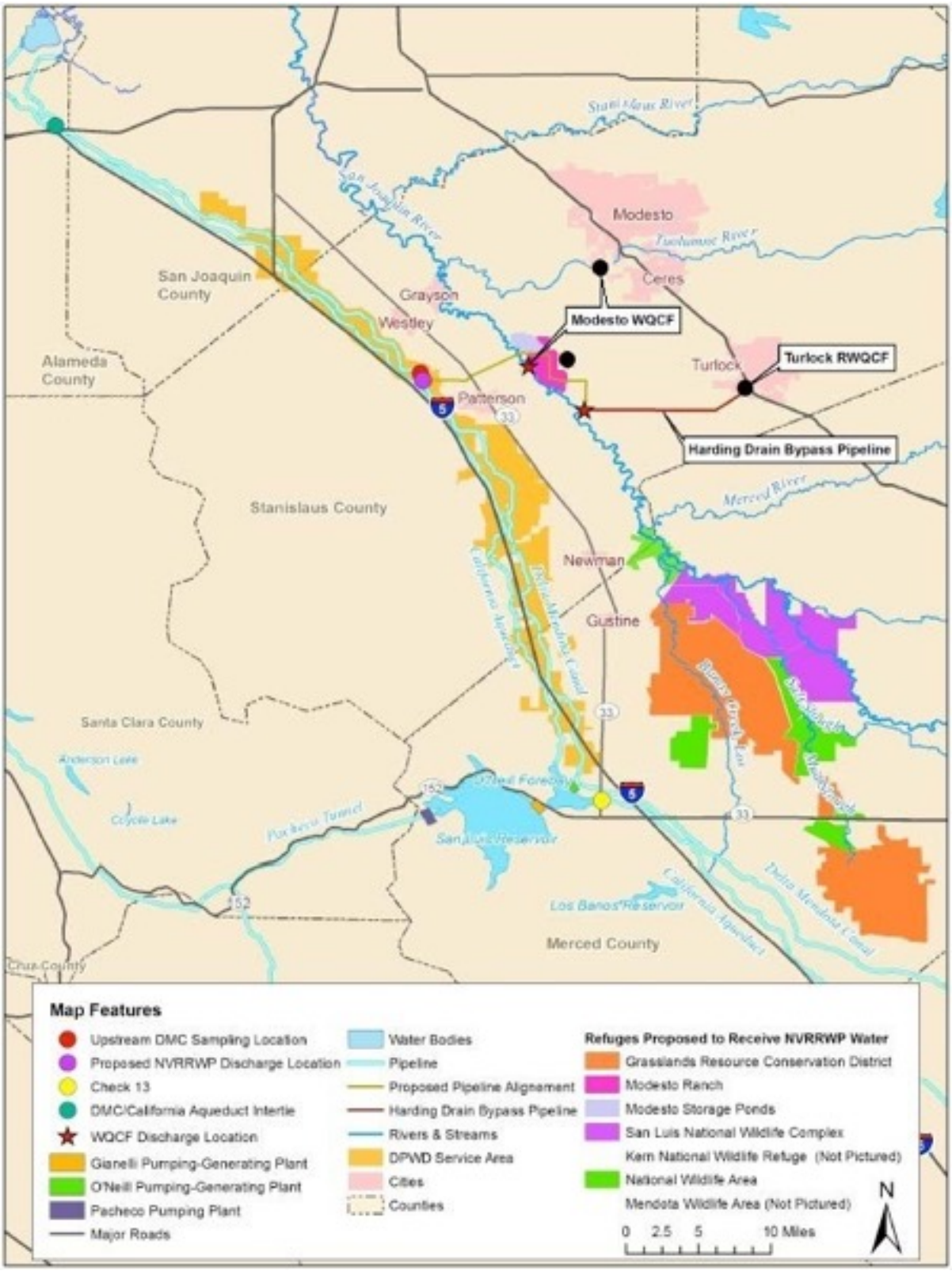

Figure B-3: Proposed Pipeline Location Map.

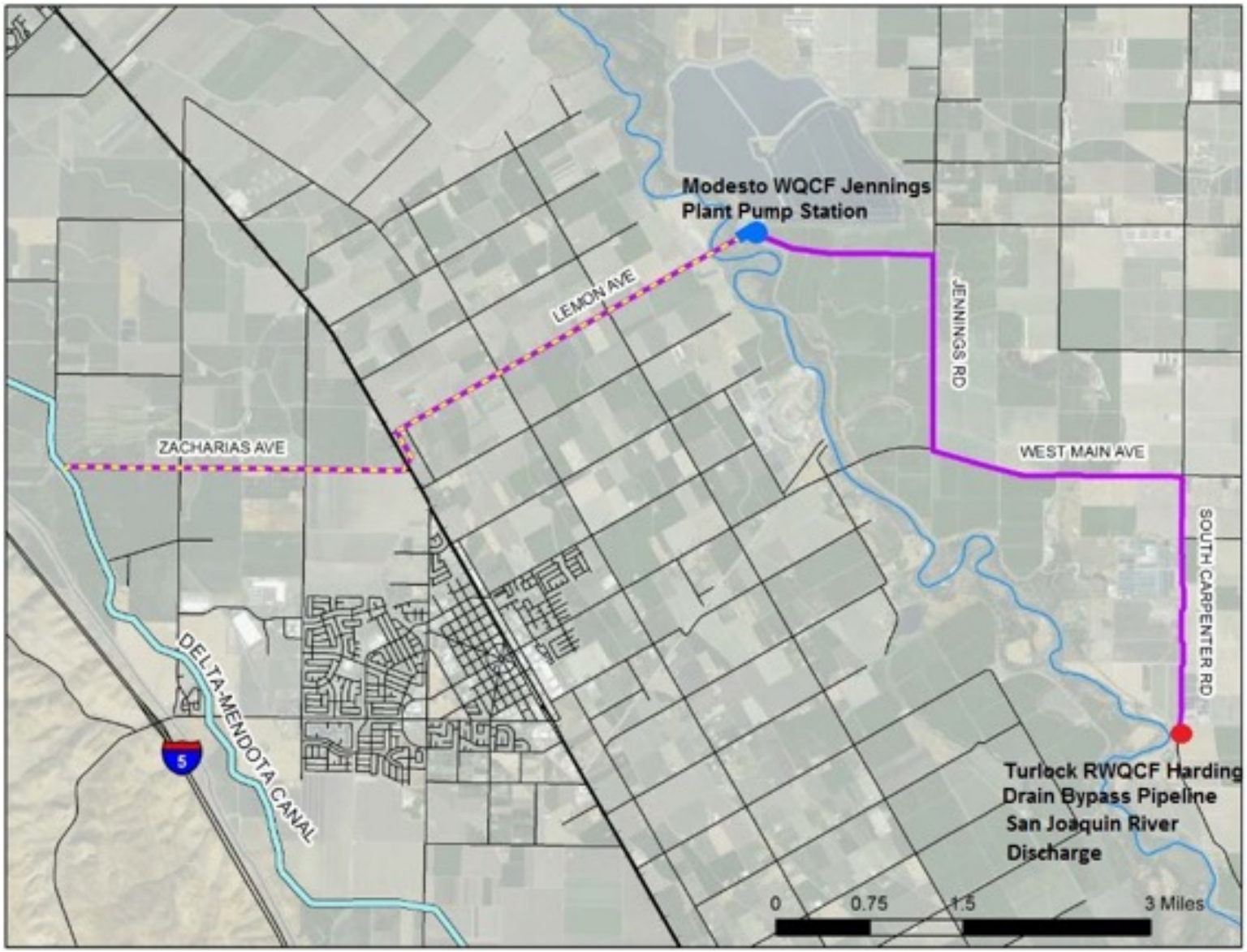

ATTACHMENT C – FLOW SCHEMATICS

Figure C-1. City of Modesto WQCF Primary Treatment Schematic

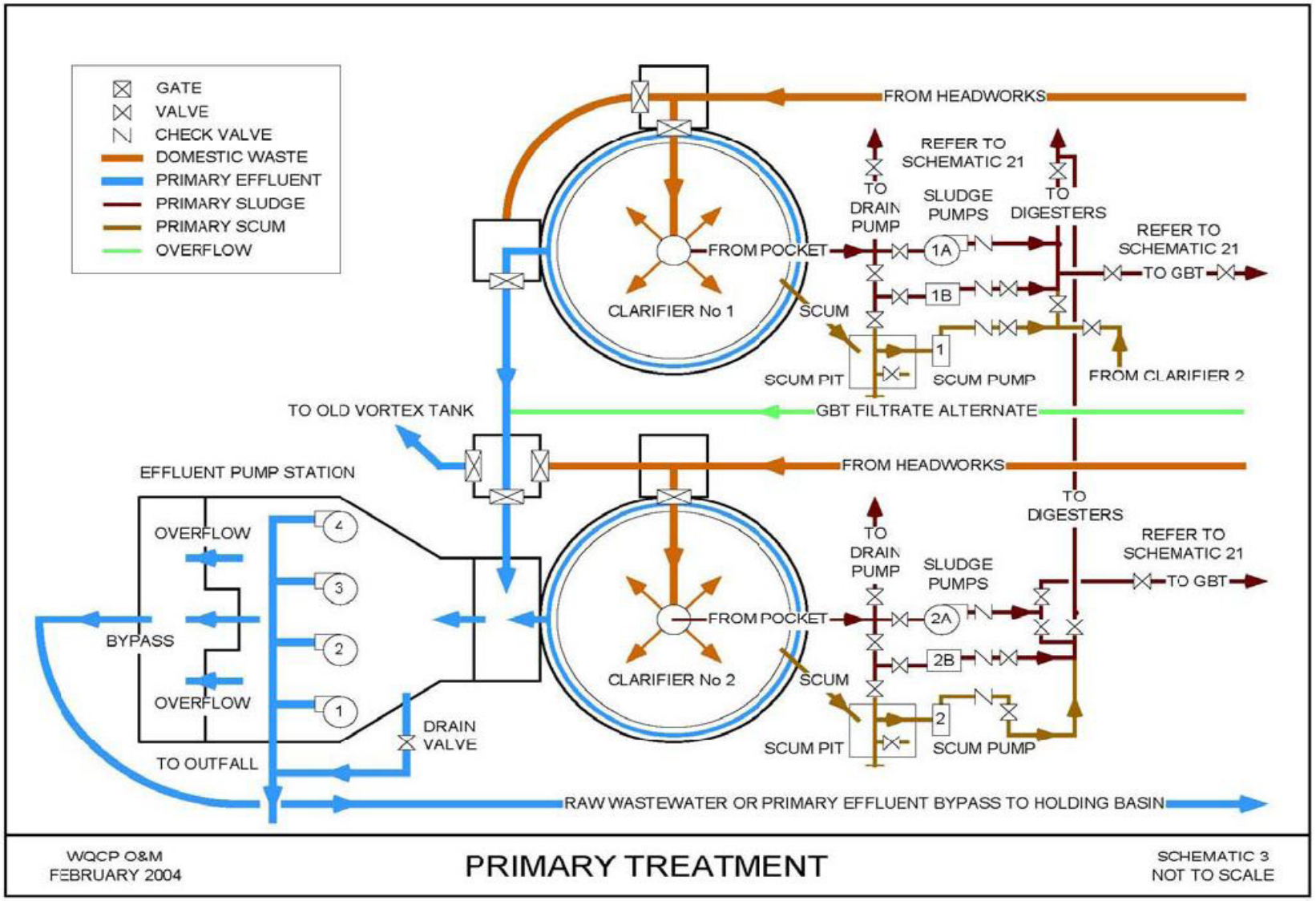

Figure C-2. City of Modesto WQCF Secondary Treatment Schematic

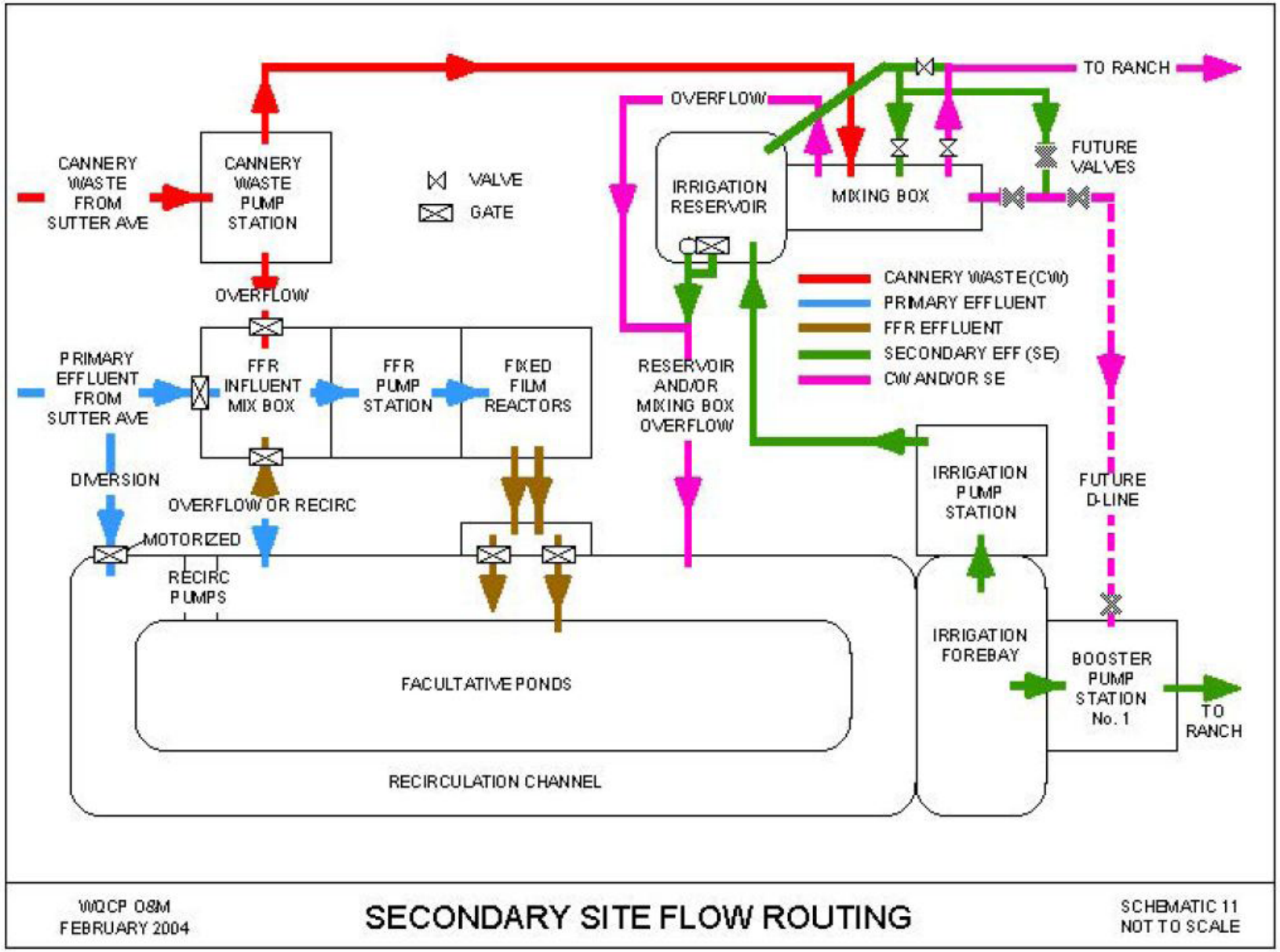

Figure C-3. City of Modesto WQCF Parallel Outfall Lines

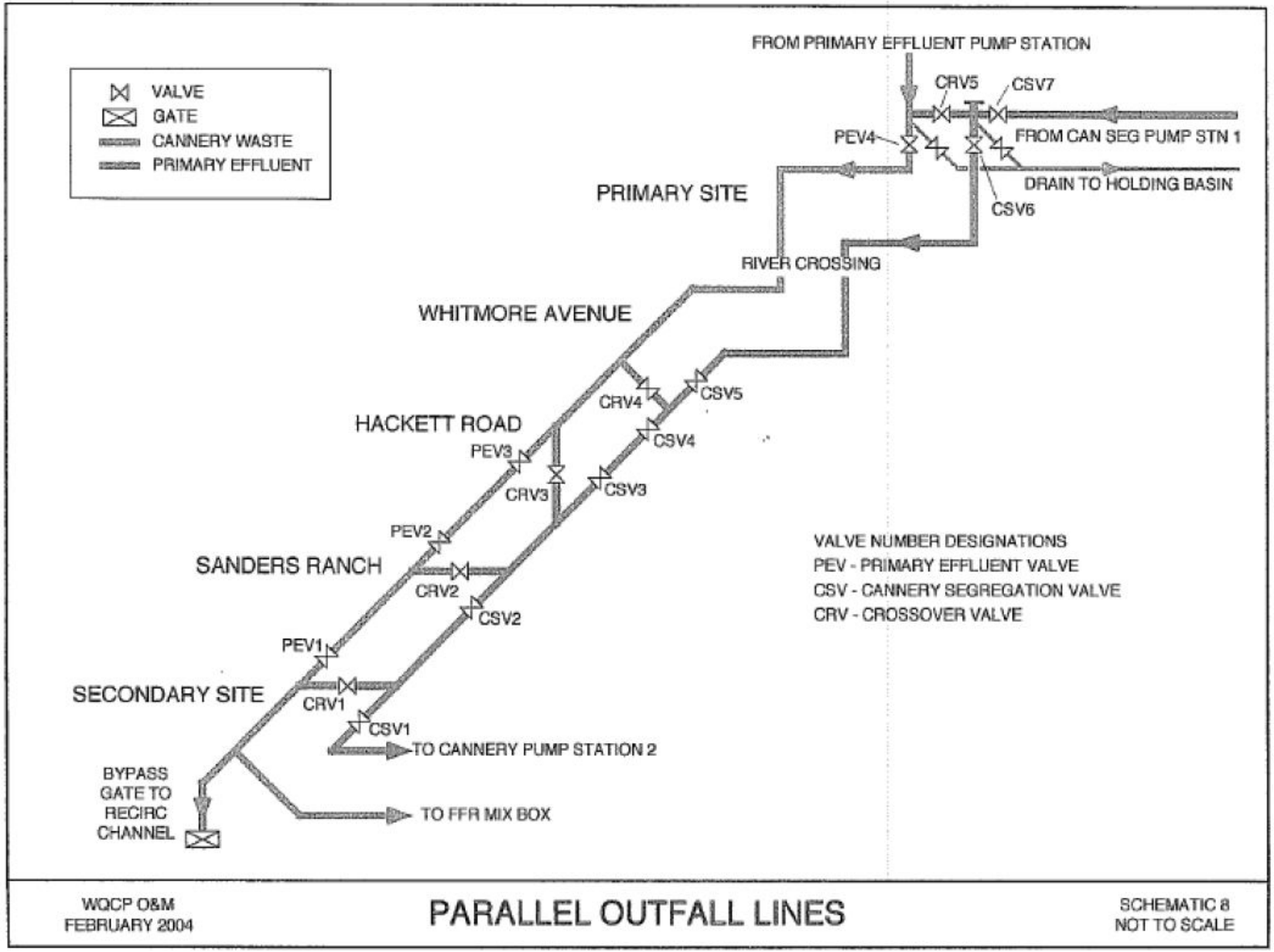

Figure C-4. City of Modesto WQCF Phase 2/BNR – Tertiary Treatment Facility

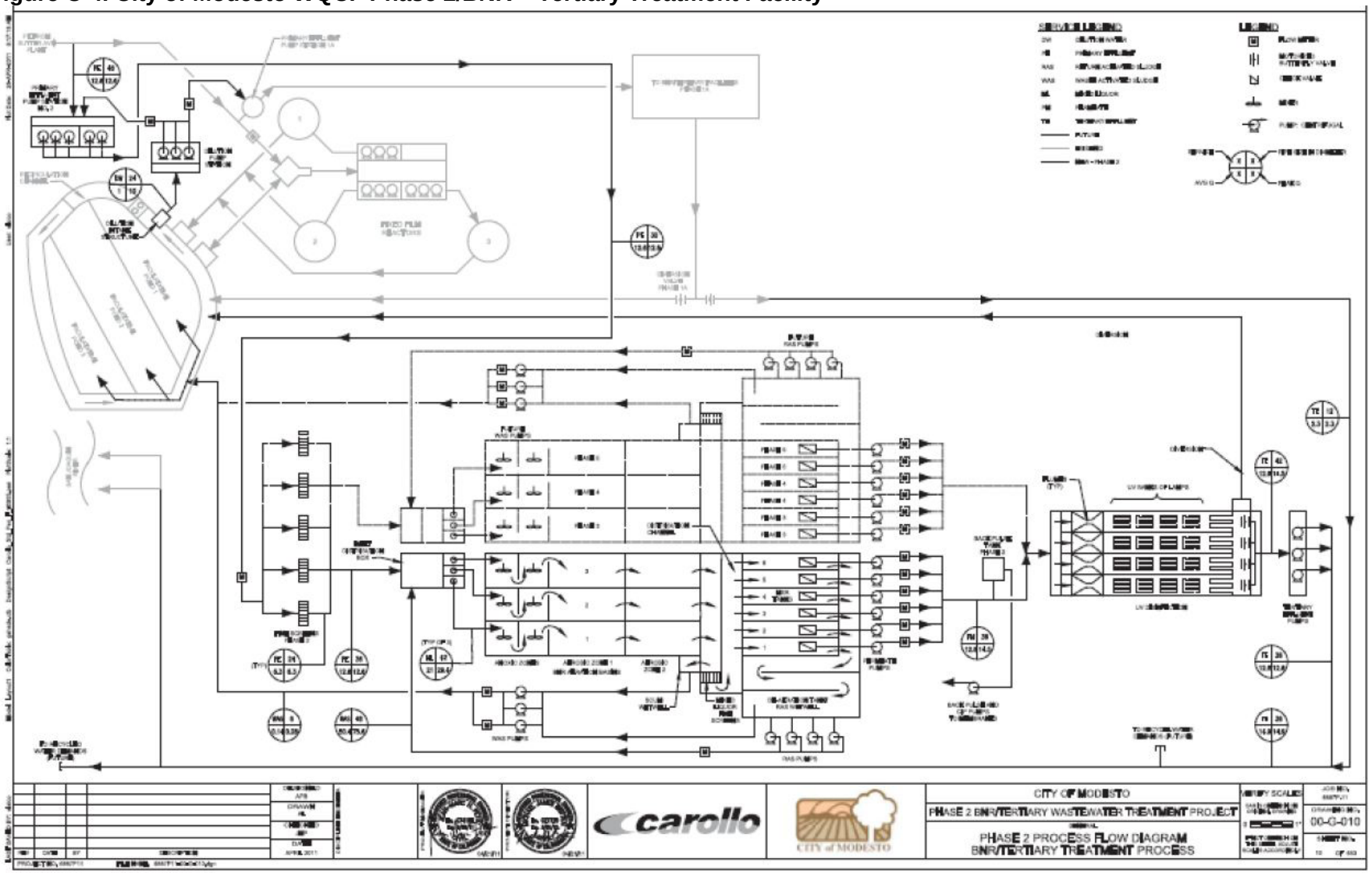

Figure C-5. City of Turlock RWQCF Flow Schematic

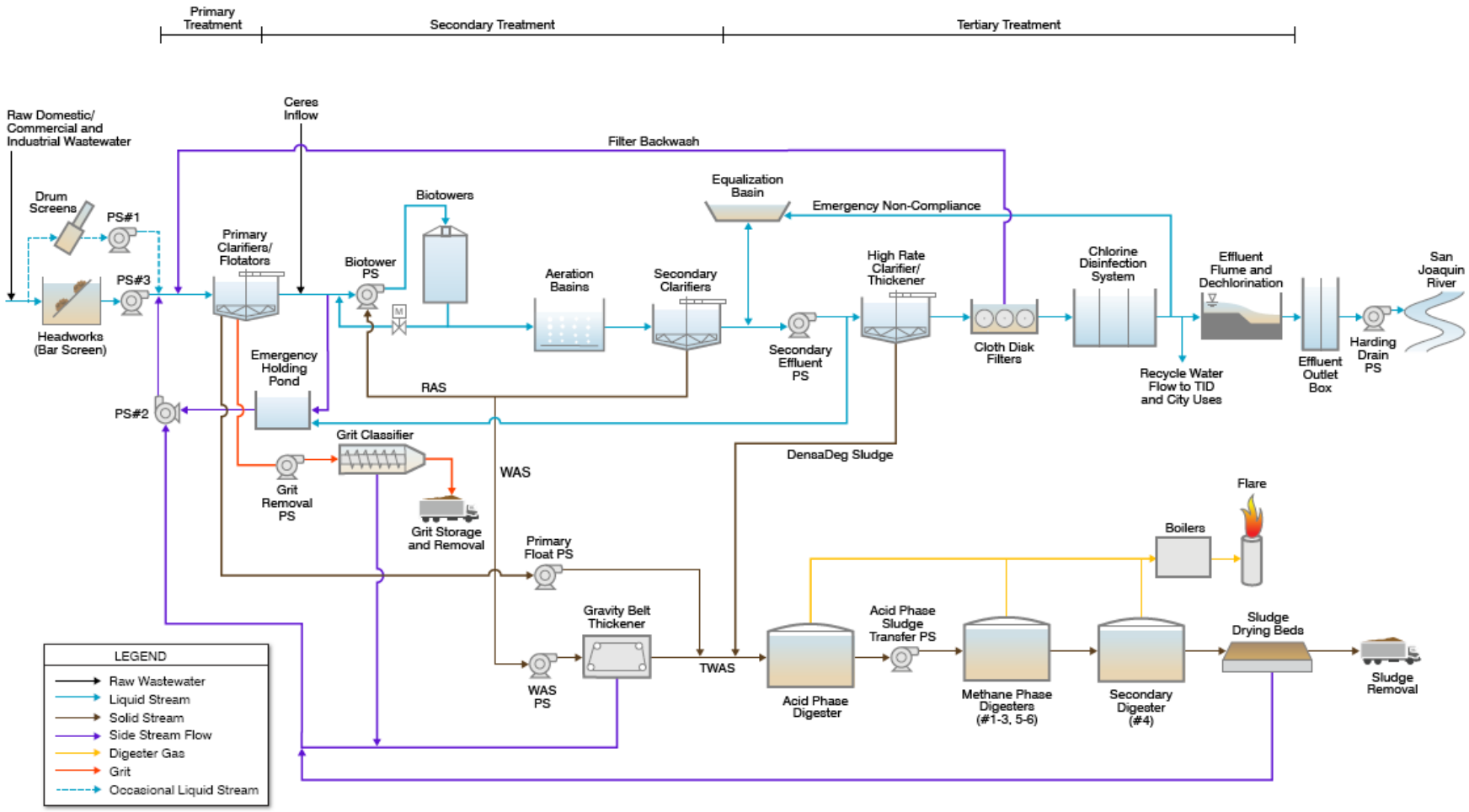
Primary Treatment
Secondary Treatment
Tertiary Treatment
Raw Domestic/ Commercial and Industrial Wastewater
Ceres Inflow
Filter Backwash
Drum Screens
PS#1
PS#3
Headworks (Bar Screen)
Primary Clarifiers/ Flotators
Biotower PS
Biotowers
Equalization Basin
Emergency Non-Compliance
Aeration Basins
Secondary Clarifiers
High Rate Clarifier/ Thickener
Chlorine Disinfection System
Effluent Flume and Dechlorination
San Joaquin River
Secondary Effluent PS
Cloth Disk Filters
Recycle Water Flow to TID and City Uses
Effluent Outlet Box
Harding Drain PS
Emergency Holding Pond
RAS
PS#2
Grit Classifier
Grit Removal PS
Grit Storage and Removal
WAS
DensaDeg Sludge
Flare
Boilers
Primary Float PS
Gravity Belt Thickener
WAS PS
TWAS
Acid Phase Digester
Acid Phase Sludge Transfer PS
Methane Phase Digesters (#1-3, 5-6)
Secondary Digester (#4)
Sludge Drying Beds
Sludge Removal
LEGEND
Raw Wastewater
Liquid Stream
Solid Stream
Side Stream Flow
Digester Gas
Grit
Occasional Liquid Stream

ATTACHMENT D – STANDARD PROVISIONS

I. STANDARD PROVISIONS – PERMIT COMPLIANCE

A. Duty to Comply

1. The Discharger must comply with all of the terms, requirements, and conditions of this Order. Any noncompliance constitutes a violation of the Clean Water Act (CWA) and the California Water Code and is grounds for enforcement action; permit termination, revocation and reissuance, or modification; denial of a permit renewal application; or a combination thereof. (40 C.F.R. § 122.41(a); Wat. Code, §§ 13261, 13263, 13265, 13268, 13000, 13001, 13304, 13350, 13385.)

2. The Discharger shall comply with effluent standards or prohibitions established under Section 307(a) of the CWA for toxic pollutants and with standards for sewage sludge use or disposal established under Section 405(d) of the CWA within the time provided in the regulations that establish these standards or prohibitions, even if this Order has not yet been modified to incorporate the requirement. (40 C.F.R. § 122.41(a)(1).)

B. Need to Halt or Reduce Activity Not a Defense

It shall not be a defense for a Discharger in an enforcement action that it would have been necessary to halt or reduce the permitted activity in order to maintain compliance with the conditions of this Order. (40 C.F.R. § 122.41(c).)

C. Duty to Mitigate

The Discharger shall take all reasonable steps to minimize or prevent any discharge or sludge use or disposal in violation of this Order that has a reasonable likelihood of adversely affecting human health or the environment. (40 C.F.R. § 122.41(d).)

D. Proper Operation and Maintenance

The Discharger shall at all times properly operate and maintain all facilities and systems of treatment and control (and related appurtenances) which are installed or used by the Discharger to achieve compliance with the conditions of this Order. Proper operation and maintenance also includes adequate laboratory controls and appropriate quality assurance procedures. This provision requires the operation of backup or auxiliary facilities or similar systems that are installed by a Discharger only when necessary to achieve compliance with the conditions of this Order. (40 C.F.R. § 122.41(e).)

E. Property Rights

1. This Order does not convey any property rights of any sort or any exclusive privileges. (40 C.F.R. § 122.41(g).)

2. The issuance of this Order does not authorize any injury to persons or property or invasion of other private rights, or any infringement of state or local law or regulations. (40 C.F.R. § 122.5(c).)

F. Inspection and Entry

The Discharger shall allow the Central Valley Water Board, State Water Board, U.S. EPA, and/or their authorized representatives (including an authorized contractor acting as their representative), upon the presentation of credentials and other documents, as may be required by law, to (33 U.S.C. § 1318(a)(4)(B); 40 C.F.R. § 122.41(i); Wat. Code, § 13267, 13383):

1. Enter upon the Discharger's premises where a regulated facility or activity is located or conducted, or where records are kept under the conditions of this Order (33 U.S.C § 1318(a)(4)(B)(ii); 40 C.F.R. § 122.41(i)(1); Wat. Code, §§ 13267, 13383);
2. Have access to and copy, at reasonable times, any records that must be kept under the conditions of this Order (33 U.S.C. § 1318(a)(4)(B)(ii); 40 C.F.R. § 122.41(i)(2); Wat. Code, §§ 13267, 13383);
3. Inspect and photograph, at reasonable times, any facilities, equipment (including monitoring and control equipment), practices, or operations regulated or required under this Order (33 U.S.C § 1318(a)(4)(B)(ii); 40 C.F.R. § 122.41(i)(3); Wat. Code, § 13267, 13383); and
4. Sample or monitor, at reasonable times, for the purposes of assuring Order compliance or as otherwise authorized by the CWA or the Water Code, any substances or parameters at any location. (33 U.S.C § 1318(a)(4)(B); 40 C.F.R. § 122.41(i)(4); Wat. Code, §§ 13267, 13383.)

G. Bypass

1. Definitions
   a. “Bypass” means the intentional diversion of waste streams from any portion of a treatment facility. (40 C.F.R. § 122.41(m)(1)(i).)
   b. “Severe property damage” means substantial physical damage to property, damage to the treatment facilities, which causes them to become inoperable, or substantial and permanent loss of natural resources that can reasonably be expected to occur in the absence of a bypass. Severe property damage does not mean economic loss caused by delays in production. (40 C.F.R. § 122.41(m)(1)(ii).)
2. Bypass not exceeding limitations. The Discharger may allow any bypass to occur which does not cause exceedances of effluent limitations, but only if it is for essential maintenance to assure efficient operation. These bypasses are not subject to the provisions listed in Standard Provisions – Permit Compliance I.G.3, I.G.4, and I.G.5 below. (40 C.F.R. § 122.41(m)(2).)
3. Prohibition of bypass. Bypass is prohibited, and the Central Valley Water Board may take enforcement action against a Discharger for bypass, unless (40 C.F.R. § 122.41(m)(4)(i)):
   a. Bypass was unavoidable to prevent loss of life, personal injury, or severe property damage (40 C.F.R. § 122.41(m)(4)(i)(A));
   b. There were no feasible alternatives to the bypass, such as the use of auxiliary treatment facilities, retention of untreated wastes, or maintenance during normal periods of equipment downtime. This condition is not satisfied if adequate back-up equipment should have been installed in the exercise of reasonable engineering judgment to prevent a bypass that occurred during normal periods of equipment downtime or preventive maintenance (40 C.F.R. § 122.41(m)(4)(i)(B)); and
   c. The Discharger submitted notice to the Central Valley Water Boardas required under Standard Provisions – Permit Compliance I.G.5 below. (40 C.F.R. § 122.41(m)(4)(i)(C).)

4. The Central Valley Water Board may approve an anticipated bypass, after considering its adverse effects, if the Central Valley Water Board determines that it will meet the three conditions listed in Standard Provisions – Permit Compliance I.G.3 above. (40 C.F.R. § 122.41(m)(4)(ii).)

5. Notice

   a. Anticipated bypass. If the Discharger knows in advance of the need for a bypass, it shall submit a notice, if possible at least 10 days before the date of the bypass. (40 C.F.R. § 122.41(m)(3)(i).)

   b. Unanticipated bypass. The Discharger shall submit notice of an unanticipated bypass as required in Standard Provisions - Reporting V.E below (24-hour notice). (40 C.F.R. § 122.41(m)(3)(ii).)

H. Upset

Upset means an exceptional incident in which there is unintentional and temporary noncompliance with technology based permit effluent limitations because of factors beyond the reasonable control of the Discharger. An upset does not include noncompliance to the extent caused by operational error, improperly designed treatment facilities, inadequate treatment facilities, lack of preventive maintenance, or careless or improper operation. (40 C.F.R. § 122.41(n)(1).)

1. Effect of an upset. An upset constitutes an affirmative defense to an action brought for noncompliance with such technology based permit effluent limitations if the requirements of Standard Provisions – Permit Compliance I.H.2 below are met. No determination made during administrative review of claims that noncompliance was caused by upset, and before an action for noncompliance, is final administrative action subject to judicial review. (40 C.F.R. § 122.41(n)(2).)

2. Conditions necessary for a demonstration of upset. A Discharger who wishes to establish the affirmative defense of upset shall demonstrate, through properly signed, contemporaneous operating logs or other relevant evidence that (40 C.F.R. § 122.41(n)(3)):

   a. An upset occurred and that the Discharger can identify the cause(s) of the upset (40 C.F.R. § 122.41(n)(3)(i));

   b. The permitted facility was, at the time, being properly operated (40 C.F.R. § 122.41(n)(3)(ii));

   c. The Discharger submitted notice of the upset as required in Standard Provisions – Reporting V.E.2.b below (24-hour notice) (40 C.F.R. § 122.41(n)(3)(iii)); and

   d. The Discharger complied with any remedial measures required under Standard Provisions – Permit Compliance I.C above. (40 C.F.R. § 122.41(n)(3)(iv).)

3. Burden of proof. In any enforcement proceeding, the Discharger seeking to establish the occurrence of an upset has the burden of proof. (40 C.F.R. § 122.41(n)(4).)

II. STANDARD PROVISIONS – PERMIT ACTION

A. General

This Order may be modified, revoked and reissued, or terminated for cause. The filing of a request by the Discharger for modification, revocation and reissuance, or termination, or a notification of planned changes or anticipated noncompliance does not stay any Order condition. (40 C.F.R. § 122.41(f).)

B. Duty to Reapply

If the Discharger wishes to continue an activity regulated by this Order after the expiration date of this Order, the Discharger must apply for and obtain a new permit. (40 C.F.R. § 122.41(b).)

C. Transfers

This Order is not transferable to any person except after notice to the Central Valley Water Board. The Central Valley Water Board may require modification or revocation and reissuance of the Order to change the name of the Discharger and incorporate such other requirements as may be necessary under the CWA and the Water Code. (40 C.F.R. § 122.41(l)(3); 122.61.)

III. STANDARD PROVISIONS – MONITORING

A. Samples and measurements taken for the purpose of monitoring shall be representative of the monitored activity. (40 C.F.R. § 122.41(j)(1).)

B. Monitoring results must be conducted according to test procedures approved under 40 C.F.R. part 136 for the analyses of pollutants unless another method is required under 40 C.F.R. subchapters N or O. In the case of pollutants for which there are no approved methods under 40 C.F.R. part 136 or otherwise required under 40 C.F.R. subchapters N or O, monitoring must be conducted according to a test procedure specified in this Order for such pollutants. (40 C.F.R. § 122.41(j)(4); 122.44(i)(1)(iv).)

IV. STANDARD PROVISIONS – RECORDS

A. Except for records of monitoring information required by this Order related to the Discharger's sewage sludge use and disposal activities, which shall be retained for a period of at least five years (or longer as required by 40 C.F.R. part 503), the Discharger shall retain records of all monitoring information, including all calibration and maintenance records and all original strip chart recordings for continuous monitoring instrumentation, copies of all reports required by this Order, and records of all data used to complete the application for this Order, for a period of at least three (3) years from the date of the sample, measurement, report or application. This period may be extended by request of the Central Valley Water Board Executive Officer at any time. (40 C.F.R. § 122.41(j)(2).)

B. Records of monitoring information shall include:

1. The date, exact place, and time of sampling or measurements (40 C.F.R. § 122.41(j)(3)(i));
2. The individual(s) who performed the sampling or measurements (40 C.F.R. § 122.41(j)(3)(ii));
3. The date(s) analyses were performed (40 C.F.R. § 122.41(j)(3)(iii));
4. The individual(s) who performed the analyses (40 C.F.R. § 122.41(j)(3)(iv));
5. The analytical techniques or methods used (40 C.F.R. § 122.41(j)(3)(v)); and
6. The results of such analyses. (40 C.F.R. § 122.41(j)(3)(vi).)

C. Claims of confidentiality for the following information will be denied (40 C.F.R. § 122.7(b)):

1. The name and address of any permit applicant or Discharger (40 C.F.R. § 122.7(b)(1)); and
2. Permit applications and attachments, permits and effluent data. (40 C.F.R. § 122.7(b)(2).)

V. STANDARD PROVISIONS – REPORTING

A. Duty to Provide Information

The Discharger shall furnish to the Central Valley Water Board, State Water Board, or U.S. EPA within a reasonable time, any information which the Central Valley Water Board, State Water Board, or U.S. EPA may request to determine whether cause exists for modifying, revoking and reissuing, or terminating this Order or to determine compliance with this Order. Upon request, the Discharger shall also furnish to the Central Valley Water Board, State Water Board, or U.S. EPA copies of records required to be kept by this Order. (40 C.F.R. § 122.41(h); Wat. Code, §§ 13267, 13383.)

B. Signatory and Certification Requirements

1. All applications, reports, or information submitted to the Central Valley Water Board, State Water Board, and/or U.S. EPA shall be signed and certified in accordance with Standard Provisions – Reporting V.B.2, V.B.3, V.B.4, and V.B.5 below. (40 C.F.R. § 122.41(k).)

2. All permit applications shall be signed by either a principal executive officer or ranking elected official. For purposes of this provision, a principal executive officer of a federal agency includes: (i) the chief executive officer of the agency, or (ii) a senior executive officer having responsibility for the overall operations of a principal geographic unit of the agency (e.g., Regional Administrators of U.S. EPA). (40 C.F.R. § 122.22(a)(3).).

3. All reports required by this Order and other information requested by the Central Valley Water Board, State Water Board, or U.S. EPA shall be signed by a person described in Standard Provisions – Reporting V.B.2 above, or by a duly authorized representative of that person. A person is a duly authorized representative only if:

   a. The authorization is made in writing by a person described in Standard Provisions – Reporting V.B.2 above (40 C.F.R. § 122.22(b)(1));

   b. The authorization specifies either an individual or a position having responsibility for the overall operation of the regulated facility or activity such as the position of plant manager, operator of a well or a well field, superintendent, position of equivalent responsibility, or an individual or position having overall responsibility for environmental matters for the company. (A duly authorized representative may thus be either a named individual or any individual occupying a named position.) (40 C.F.R. § 122.22(b)(2)); and

   c. The written authorization is submitted to the Central Valley Water Board and State Water Board. (40 C.F.R. § 122.22(b)(3).)

4. If an authorization under Standard Provisions – Reporting V.B.3 above is no longer accurate because a different individual or position has responsibility for the overall operation of the facility, a new authorization satisfying the requirements of Standard Provisions – Reporting V.B.3 above must be submitted to the Central Valley Water Board and State Water Board prior to or together with any reports, information, or applications, to be signed by an authorized representative. (40 C.F.R. § 122.22(c).)

5. Any person signing a document under Standard Provisions – Reporting V.B.2 or V.B.3 above shall make the following certification:

   "I certify under penalty of law that this document and all attachments were prepared under my direction or supervision in accordance with a system designed to assure that qualified personnel properly gather and evaluate the information submitted. Based on my

inquiry of the person or persons who manage the system or those persons directly responsible for gathering the information, the information submitted is, to the best of my knowledge and belief, true, accurate, and complete. I am aware that there are significant penalties for submitting false information, including the possibility of fine and imprisonment for knowing violations." (40 C.F.R. § 122.22(d).)

C. Monitoring Reports

1. Monitoring results shall be reported at the intervals specified in the Monitoring and Reporting Program (Attachment E) in this Order. (40 C.F.R. § 122.41(l)(4).)
2. Monitoring results must be reported on a Discharge Monitoring Report (DMR) form or forms provided or specified by the Central Valley Water Board or State Water Board for reporting results of monitoring of sludge use or disposal practices. (40 C.F.R. § 122.41(l)(4)(i).)
3. If the Discharger monitors any pollutant more frequently than required by this Order using test procedures approved under 40 C.F.R. part 136, or another method required for an industry-specific waste stream under 40 C.F.R. subchapters N or O, the results of such monitoring shall be included in the calculation and reporting of the data submitted in the DMR or sludge reporting form specified by the Central Valley Water Board. (40 C.F.R. § 122.41(l)(4)(ii).)
4. Calculations for all limitations, which require averaging of measurements, shall utilize an arithmetic mean unless otherwise specified in this Order. (40 C.F.R. § 122.41(l)(4)(iii).)

D. Compliance Schedules

Reports of compliance or noncompliance with, or any progress reports on, interim and final requirements contained in any compliance schedule of this Order, shall be submitted no later than 14 days following each schedule date. (40 C.F.R. § 122.41(l)(5).)

E. Twenty-Four Hour Reporting

1. The Discharger shall report any noncompliance that may endanger health or the environment. Any information shall be provided orally within 24 hours from the time the Discharger becomes aware of the circumstances. A written submission shall also be provided within five (5) days of the time the Discharger becomes aware of the circumstances. The written submission shall contain a description of the noncompliance and its cause; the period of noncompliance, including exact dates and times, and if the noncompliance has not been corrected, the anticipated time it is expected to continue; and steps taken or planned to reduce, eliminate, and prevent reoccurrence of the noncompliance. (40 C.F.R. § 122.41(l)(6)(i).)
2. The following shall be included as information that must be reported within 24 hours under this paragraph (40 C.F.R. § 122.41(l)(6)(ii)):
   a. Any unanticipated bypass that exceeds any effluent limitation in this Order. (40 C.F.R. § 122.41(l)(6)(ii)(A).)
   b. Any upset that exceeds any effluent limitation in this Order. (40 C.F.R. § 122.41(l)(6)(ii)(B).)
3. The Central Valley Water Board may waive the above-required written report under this provision on a case-by-case basis if an oral report has been received within 24 hours. (40 C.F.R. § 122.41(l)(6)(iii).)

F. Planned Changes

The Discharger shall give notice to the Central Valley Water Board as soon as possible of any planned physical alterations or additions to the permitted facility. Notice is required under this provision only when (40 C.F.R. § 122.41(l)(1)):

1. The alteration or addition to a permitted facility may meet one of the criteria for determining whether a facility is a new source in section 122.29(b) (40 C.F.R. § 122.41(l)(1)(i)); or
2. The alteration or addition could significantly change the nature or increase the quantity of pollutants discharged. This notification applies to pollutants that are subject neither to effluent limitations in this Order nor to notification requirements under section 122.42(a)(1) (see Additional Provisions—Notification Levels VII.A.1). (40 C.F.R. § 122.41(l)(1)(ii).)
3. The alteration or addition results in a significant change in the Discharger's sludge use or disposal practices, and such alteration, addition, or change may justify the application of permit conditions that are different from or absent in the existing permit, including notification of additional use or disposal sites not reported during the permit application process or not reported pursuant to an approved land application plan. (40 C.F.R.§ 122.41(l)(1)(iii).)

G. Anticipated Noncompliance

The Discharger shall give advance notice to the Central Valley Water Board or State Water Board of any planned changes in the permitted facility or activity that may result in noncompliance with this Order's requirements. (40 C.F.R. § 122.41(l)(2).)

H. Other Noncompliance

The Discharger shall report all instances of noncompliance not reported under Standard Provisions – Reporting V.C, V.D, and V.E above at the time monitoring reports are submitted. The reports shall contain the information listed in Standard Provision – Reporting V.E above. (40 C.F.R. § 122.41(l)(7).)

I. Other Information

When the Discharger becomes aware that it failed to submit any relevant facts in a permit application, or submitted incorrect information in a permit application or in any report to the Central Valley Water Board**,** State Water Board, or U.S. EPA, the Discharger shall promptly submit such facts or information. (40 C.F.R. § 122.41(l)(8).)

VI. STANDARD PROVISIONS – ENFORCEMENT

A. The Central Valley Water Board is authorized to enforce the terms of this permit under several provisions of the Water Code, including, but not limited to, sections 13385, 13386, and 13387.

VII. ADDITIONAL PROVISIONS – NOTIFICATION LEVELS

A. Publicly-Owned Treatment Works (POTW's)

All POTW's shall provide adequate notice to the Central Valley Water Board of the following (40 C.F.R. § 122.42(b)):

1. Any new introduction of pollutants into the POTW from an indirect discharger that would be subject to sections 301 or 306 of the CWA if it were directly discharging those pollutants (40 C.F.R. § 122.42(b)(1)); and

2. Any substantial change in the volume or character of pollutants being introduced into that POTW by a source introducing pollutants into the POTW at the time of adoption of the Order. (40 C.F.R. § 122.42(b)(2).)

3. Adequate notice shall include information on the quality and quantity of effluent introduced into the POTW as well as any anticipated impact of the change on the quantity or quality of effluent to be discharged from the POTW. (40 C.F.R. § 122.42(b)(3).)

ATTACHMENT E – MONITORING AND REPORTING PROGRAM

Contents

I. GENERAL MONITORING PROVISIONS E-2
II. MONITORING LOCATIONS E-3
III. INFLUENT MONITORING REQUIREMENTS E-4
A. MONITORING LOCATIONS INF-001A AND INF-001B E-4
IV. EFFLUENT MONITORING REQUIREMENTS E-4
A. MONITORING LOCATION EFF-002 ..... E-4
B. MONITORING LOCATION EFF-001A E-5
C. MONITORING LOCATION EFF-001B E-6
V. WHOLE EFFLUENT TOXICITY TESTING REQUIREMENTS E-7
VI. LAND DISCHARGE MONITORING REQUIREMENTS – NOT APPLICABLE E-10
VII. RECYCLING MONITORING REQUIREMENTS – NOT APPLICABLE E-10
VIII. RECEIVING WATER MONITORING REQUIREMENTS E-10
A. MONITORING LOCATIONS DMC-001 AND DMC-002 ..... E-10
IX. OTHER MONITORING REQUIREMENTS E-11
A. CITY OF MODESTO WQCF FILTRATION SYSTEM AND ULTRAVIOLET LIGHT (UV) DISINFECTION SYSTEM E-11
B. EFFLUENT AND RECEIVING WATER CHARACTERIZATION (2019) E-11
X. REPORTING REQUIREMENTS E-16
A. GENERAL MONITORING AND REPORTING REQUIREMENTS E-16
B. SELF-MONITORING REPORTS (SMR'S) E-16
C. DISCHARGE MONITORING REPORTS (DMR'S) E-19
D. OTHER REPORTS E-19

Tables

TABLE E-1. MONITORING STATION LOCATIONS E-3
TABLE E-2. INFLUENT MONITORING E-4
TABLE E-3. EFFLUENT MONITORING – MONITORING LOCATION EFF-002 ..... E-4
TABLE E-4. EFFLUENT MONITORING – MONITORING LOCATION EFF-001A E-5
TABLE E-5. EFFLUENT MONITORING – MONITORING LOCATION EFF-001B E-6
TABLE E-6. CHRONIC TOXICITY TESTING DILUTION SERIES E-9
TABLE E-7. RECEIVING WATER MONITORING REQUIREMENTS E-10
TABLE E-8. FILTRATION SYSTEM AND UV DISINFECTION SYSTEM MONITORING REQUIREMENTS E-11
TABLE E-9. EFFLUENT CHARACTERIZATION MONITORING E-12
TABLE E-10. MONITORING PERIODS AND REPORTING SCHEDULE E-16
TABLE E-11. REPORTING REQUIREMENTS FOR SPECIAL PROVISIONS REPORTS FOR THE CITY OF TURLOCK RWQCF E-20
TABLE E-12. REPORTING REQUIREMENTS FOR SPECIAL PROVISIONS REPORTS FOR THE CITY OF MODESTO WQCF E-20

ATTACHMENT E – MONITORING AND REPORTING PROGRAM (MRP)

The Code of Federal Regulations (40 C.F.R. § 122.48) requires that all NPDES permits specify monitoring and reporting requirements. Water Code sections 13267 and 13383 also authorize the Central Valley Water Board to require technical and monitoring reports. This MRP establishes monitoring and reporting requirements that implement federal and California regulations.

I. GENERAL MONITORING PROVISIONS

A. Samples and measurements taken as required herein shall be representative of the volume and nature of the monitored discharge. All samples shall be taken at the monitoring locations specified below and, unless otherwise specified, before the monitored flow joins or is diluted by any other waste stream, body of water, or substance. Monitoring locations shall not be changed without notification to and the approval of the Central Valley Water Board.

B. Effluent samples shall be taken downstream of the last addition of wastes to the treatment or discharge works where a representative sample may be obtained prior to mixing with the receiving waters. Samples shall be collected at such a point and in such a manner to ensure a representative sample of the discharge.

C. Chemical, bacteriological, and bioassay analyses of any material required by this Order shall be conducted by a laboratory certified for such analyses by the State Water Resources Control Board (State Water Board), Division of Drinking Water (DDW; formerly the Department of Public Health). Laboratories that perform sample analyses must be identified in all monitoring reports submitted to the Central Valley Water Board. In the event a certified laboratory is not available to the Discharger for any onsite field measurements such as pH, dissolved oxygen (DO), turbidity, temperature, and residual chlorine, such analyses performed by a noncertified laboratory will be accepted provided a Quality Assurance-Quality Control Program is instituted by the laboratory. A manual containing the steps followed in this program for any onsite field measurements such as pH, DO, turbidity, temperature, and residual chlorine must be kept onsite in the treatment facility laboratory and shall be available for inspection by Central Valley Water Board staff. The Discharger must demonstrate sufficient capability (qualified and trained employees, properly calibrated and maintained field instruments, etc.) to adequately perform these field measurements. The Quality Assurance-Quality Control Program must conform to U.S. EPA guidelines or to procedures approved by the Central Valley Water Board.

D. Appropriate flow measurement devices and methods consistent with accepted scientific practices shall be selected and used to ensure the accuracy and reliability of measurements of the volume of monitored discharges. All monitoring instruments and devices used by the Discharger to fulfill the prescribed monitoring program shall be properly maintained and calibrated as necessary, at least yearly, to ensure their continued accuracy. All flow measurement devices shall be calibrated at least once per year to ensure continued accuracy of the devices.

E. Monitoring results, including noncompliance, shall be reported at intervals and in a manner specified in this Monitoring and Reporting Program.

F. Laboratories analyzing monitoring samples shall be certified by DDW, in accordance with the provision of Water Code section 13176, and must include quality assurance/quality control data with their reports.

G. The Discharger shall ensure that the results of the Discharge Monitoring Report-Quality Assurance (DMR-QA) Study or the most recent Water Pollution Performance Evaluation Study are submitted annually to the State Water Resources Control Board at the following address:

State Water Resources Control Board Quality Assurance Program Officer
Office of Information Management and Analysis
State Water Resources Control Board
1001 I Street, Sacramento, CA 95814

H. The Discharger shall file with the Central Valley Water Board technical reports on self-monitoring performed according to the detailed specifications contained in this Monitoring and Reporting Program.

I. The results of all monitoring required by this Order shall be reported to the Central Valley Water Board, and shall be submitted in such a format as to allow direct comparison with the limitations and requirements of this Order. Unless otherwise specified, discharge flows shall be reported in terms of the monthly average and the daily maximum discharge flows.

II. MONITORING LOCATIONS

The Discharger shall establish the following monitoring locations to demonstrate compliance with the effluent limitations, discharge specifications, and other requirements in this Order:

Table E-1. Monitoring Station Locations

Discharge Point Name	Monitoring Location Name	Monitoring Location Description
--	INF-001A	A location where a representative sample of the influent into the City of Turlock RWQCF can be collected.
--	INF-001B	A location where a representative sample of the influent into the City of Modesto WQCF can be collected.
002	EFF-002	A location where a representative sample of the effluent from the North Valley Regional Recycled Water Program Joint Outfall can be collected immediately prior to discharge to the Delta-Mendota Canal
002	EFF-001A	A location where a representative sample of the effluent from the City of Turlock RWQCF can be collected after all treatment processes prior to discharge to the North Valley Regional Recycled Water Program Joint Outfall.
002	EFF-001B	A location where a representative sample of the effluent from the City of Modesto WQCF can be collected after all treatment processes prior to discharge to the North Valley Regional Recycled Water Program Joint Outfall.
--	DMC-001	In the Delta-Mendota Canal, upstream of Discharge Point 002 at the at the farm bridge located at 37°30’00.32” N, 121°11’45.91” W.
--	DMC-002	In the Delta-Mendota Canal, downstream of Discharge Point 002 at the farm bridge located at 37°28’56.83” N, 121°11’17.81” W.
--	TCO-001	For the City of Turlock RWQCF, a point immediately downstream of the chlorine disinfection system prior to dechlorination.
--	FIL-001	Monitoring of the City of Modesto WQCF filter effluent from the Phase 1A treatment train to be measured immediately downstream of the filters and prior to the ultraviolet light (UV) disinfection system.
--	FIL-002	Monitoring of the City of Modesto WQCF filter effluent from the Phase 2 treatment train to be measured immediately downstream of the filters and prior to the UV disinfection system.
--	UVS-001A	A location where a representative sample of wastewater from the Phase 1A treatment train at the City of Modesto WQCF can be collected immediately downstream of the UV disinfection system.

--	UVS-002A	A location where a representative sample of wastewater from the Phase 2 treatment train at the City of Modesto WQCF can be collected immediately downstream of the UV disinfection system.

III. INFLUENT MONITORING REQUIREMENTS

A. Monitoring Locations INF-001A and INF-001B

1. The City of Turlock shall monitor influent to the City of Turlock RWQCF at Monitoring Location INF-001A as follows. The City of Modesto shall monitor influent to the City of Modesto WQCF at Monitoring Location INF-001B as follows.

Table E-2. Influent Monitoring

Parameter	Units	Sample Type	Minimum Sampling Frequency	Required Analytical Test Method
Flow	MGD	Meter	Continuous	--
Conventional Pollutants				
Biochemical Oxygen Demand (5-day @ 20° C)	mg/L	24-hr Composite[1]	1/Day	[2]
Total Suspended Solids	mg/L	24-hr Composite[1]	1/Day	[2]

[1] 24-hour flow proportional composite.
[2] Pollutants shall be analyzed using the analytical methods described in 40 C.F.R. part 136 or by methods approved by the Central Valley Water Board or the State Water Board.

IV. EFFLUENT MONITORING REQUIREMENTS

A. Monitoring Location EFF-002

1. When discharging to the North Valley Regional Recycled Water Program Joint Outfall the Discharger shall monitor treated effluent at Monitoring Location EFF-002 as follows. If more than one analytical test method is listed for a given parameter, the Discharger must select from the listed methods and corresponding Minimum Level:

Table E-3. Effluent Monitoring – Monitoring Location EFF-002

Parameter	Units	Sample Type	Minimum Sampling Frequency	Required Analytical Test Method
Flow	MGD	Meter	Continuous	--
Conventional Pollutants				
pH	standard units	Grab	1/Week	[1,2]
Non-Conventional Pollutants				
Dissolved Oxygen	mg/L	Grab	1/Week	[1,2]
Temperature	°C	Grab	1/Week	[1,2]
Turbidity	NTU	Grab	1/Week	[1,2]

[1] Pollutants shall be analyzed using the analytical methods described in 40 C.F.R. part 136 or by methods approved by the Central Valley Water Board or the State Water Board.

[2] A hand-held field meter may be used, provided the meter utilizes a U.S. EPA-approved algorithm/method and is calibrated and maintained in accordance with the manufacturer's instructions. A calibration and maintenance log for each meter used for monitoring required by this Monitoring and Reporting Program shall be maintained at the Facility.

B. Monitoring Location EFF-001A

1. When discharging to the North Valley Regional Recycled Water Program Joint Outfall the City of Turlock shall monitor treated effluent from the City of Turlock RWQCF at Monitoring Location EFF-001A as follows. If more than one analytical test method is listed for a given parameter, the Discharger must select from the listed methods and corresponding Minimum Level:

Table E-4. Effluent Monitoring – Monitoring Location EFF-001A

Parameter	Units	Sample Type	Minimum Sampling Frequency	Required Analytical Test Method
Flow	MGD	Meter	Continuous	--
Conventional Pollutants				
Biochemical Oxygen Demand (5-day @ 20° C)	mg/L	24-hr Composite[1]	1/Day	[2]
	lbs/day	Calculate	1/Day	--
pH	standard units	Meter	Continuous[3,4]	[2]
Total Suspended Solids	mg/L	24-hr Composite[1]	1/Day	[2]
	lbs/day	Calculate	1/Day	--
Priority Pollutants				
Bis (2-ethylhexyl) phthalate	µg/L	Grab	1/Month	[2,5,6]
Chlorodibromomethane	µg/L	Grab	1/Month	[2,6]
Dichlorobromomethane	µg/L	Grab	1/Month	[2,6]
Mercury, Total Recoverable	ng/L	Grab	1/Month	[6,11]
Selenium, Total Recoverable	µg/L	Grab	1/Month	[2,6]
Non-Conventional Pollutants				
Aluminum, Total Recoverable	µg/L	24-hr Composite[1]	1/Month	[2]
Ammonia Nitrogen, Total (as N)	mg/L	Grab	1/Week[3,7]	[2]
	lbs/day	Calculate	1/Week	--
Chlorine, Total Residual	mg/L	Meter	Continuous	[2,8]
Dechlorination Agent Residual	mg/L	Meter	Continuous	[2]
Chlorpyrifos	µg/L	Grab	1/Year	[2,9]
Diazinon	µg/L	Grab	1/Year	[2,9]
Dissolved Oxygen	mg/L	Grab	1/Week	[2]
Electrical Conductivity @ 25°C	µmhos/cm	Grab	1/Week	[2]
Hardness, Total (as $CaCO_3$)	mg/L	24-hr Composite[1]	1/Month	[2]
Mercury (methyl)	ng/L	Grab	1/Month	[11]
Nitrate Plus Nitrite (as N)	mg/L	24-hr Composite[1]	1/Month	--
Temperature	°C	Grab	1/Week[3,4]	[2]
Total Coliform Organisms	MPN/100 mL	Grab	1/Day[10]	[2]
Acute Toxicity	% Survival	See Section V.A	See Section V.A	See Section V.A
Chronic Toxicity	TUc	See Section V.B	See Section V.B	See Section V.B

Parameter	Units	Sample Type	Minimum Sampling Frequency	Required Analytical Test Method

[1] 24-hour flow proportional composite.
[2] Pollutants shall be analyzed using the analytical methods described in 40 C.F.R. part 136 or by methods approved by the Central Valley Water Board or the State Water Board.
[3] pH and temperature shall be recorded at the time of ammonia sample collection.
[4] A hand-held field meter may be used, provided the meter utilizes a U.S. EPA-approved algorithm/method and is calibrated and maintained in accordance with the manufacturer's instructions. A calibration and maintenance log for each meter used for monitoring required by this Monitoring and Reporting Program shall be maintained at the Facility.
[5] In order to verify if bis (2-ethylhexyl) phthalate is truly present in the effluent discharge, the Discharger shall take steps to assure that sample containers, sampling apparatus, and analytical equipment are not sources of the detected contaminant.
[6] For priority pollutant constituents the reporting level shall be consistent with Sections 2.4.2 and 2.4.3 of the *Policy for Implementation of Toxics Standards for Inland Surface Waters, Enclosed Bays, and Estuaries of California* (See Table E-9).
[7] Concurrent with whole effluent toxicity monitoring.
[8] Total chlorine residual must be monitored with a method sensitive to and accurate at the permitted level of 0.01 mg/L.
[9] Chlorpyrifos and diazinon shall be sampled using EPA Method 625M, Method 8141, or equivalent GC/MS method.
[10] Samples for total coliform organisms shall be collected at monitoring location TCO-001.
[11] Unfiltered methyl mercury and total mercury samples shall be taken using clean hands/dirty hands procedures, as described in U.S. EPA method 1669: Sampling Ambient Water for Trace Metals at EPA Water Quality Criteria Levels, for collection of equipment blanks (section 9.4.4.2), and shall be analyzed by U.S. EPA method 1630/1631 (Revision E) with a maximum reporting limit of 0.05 ng/L for methyl mercury and 0.5 ng/L for total mercury.

C. Monitoring Location EFF-001B

1. When discharging to the North Valley Regional Recycled Water Program Joint Outfall the City of Modesto shall monitor treated effluent from the City of Modesto WQCF at Monitoring Location EFF-001B as follows. If more than one analytical test method is listed for a given parameter, the Discharger must select from the listed methods and corresponding Minimum Level:

Table E-5. Effluent Monitoring – Monitoring Location EFF-001B

Parameter	Units	Sample Type	Minimum Sampling Frequency	Required Analytical Test Method
Flow	MGD	Meter	Continuous	--
Conventional Pollutants				
Biochemical Oxygen Demand (5-day @ 20° C)	mg/L	24-hr Composite[1]	1/Day	[2]
	lbs/day	Calculate	1/Day	--
pH	standard units	Meter	Continuous[3,4]	[2]
Total Suspended Solids	mg/L	24-hr Composite[1]	1/Day	[2]
	lbs/day	Calculate	1/Day	--
Priority Pollutants				
Mercury, Total Recoverable	ng/L	Grab	1/Month	[5,8]
Selenium, Total Recoverable	µg/L	Grab	1/Month	[2,5]
Non-Conventional Pollutants				

Parameter	Units	Sample Type	Minimum Sampling Frequency	Required Analytical Test Method
Ammonia Nitrogen, Total (as N)	mg/L	Grab	1/Week[3,6]	[2]
	lbs/day	Calculate	1/Week	--
Chlorpyrifos	µg/L	Grab	1/Year	[2,7]
Diazinon	µg/L	Grab	1/Year	[2,7]
Dissolved Oxygen	mg/L	Grab	1/Week	[2]
Electrical Conductivity @ 25°C	µmhos/cm	Grab	1/Week	[2]
Hardness, Total (as $CaCO_3$)	mg/L	24-hr Composite[1]	1/Month	[2]
Mercury (methyl)	ng/L	Grab	1/Month	[8]
Nitrate Plus Nitrite (as N)	mg/L	24-hr Composite[1]	1/Month	--
Temperature	°C	Grab	1/Week[3,4]	[2]
Acute Toxicity	% Survival	See Section V.A	See Section V.A	See Section V.A
Chronic Toxicity	TUc	See Section V.B	See Section V.B	See Section V.B

[1] 24-hour flow proportional composite.
[2] Pollutants shall be analyzed using the analytical methods described in 40 C.F.R. part 136 or by methods approved by the Central Valley Water Board or the State Water Board.
[3] pH and temperature shall be recorded at the time of ammonia sample collection.
[4] A hand-held field meter may be used, provided the meter utilizes a U.S. EPA-approved algorithm/method and is calibrated and maintained in accordance with the manufacturer's instructions. A calibration and maintenance log for each meter used for monitoring required by this Monitoring and Reporting Program shall be maintained at the Facility.
[5] For priority pollutant constituents the reporting level shall be consistent with Sections 2.4.2 and 2.4.3 of the *Policy for Implementation of Toxics Standards for Inland Surface Waters, Enclosed Bays, and Estuaries of California* (See Table E-9).
[6] Concurrent with whole effluent toxicity monitoring.
[7] Chlorpyrifos and diazinon shall be sampled using EPA Method 625M, Method 8141, or equivalent GC/MS method.
[8] Unfiltered methyl mercury and total mercury samples shall be taken using clean hands/dirty hands procedures, as described in U.S. EPA method 1669: Sampling Ambient Water for Trace Metals at EPA Water Quality Criteria Levels, for collection of equipment blanks (section 9.4.4.2), and shall be analyzed by U.S. EPA method 1630/1631 (Revision E) with a maximum reporting limit of 0.05 ng/L for methyl mercury and 0.5 ng/L for total mercury.

V. WHOLE EFFLUENT TOXICITY TESTING REQUIREMENTS

A. Acute Toxicity Testing. When discharging to the North Valley Regional Recycled Water Program Joint Outfall the City of Turlock RWQCF and City of Modesto WQCF shall separately conduct acute toxicity testing to determine whether the effluent is contributing acute toxicity to the receiving water in accordance with the following acute toxicity testing requirements:

1. *Monitoring Frequency* –Quarterly acute toxicity testing, concurrent with effluent ammonia sampling, shall be performed.

2. *Sample Types* –Flow-through or static renewal testing may be used. For static renewal testing, the samples shall be grab samples and shall be representative of the volume and quality of the discharge.

   a. The effluent samples from the City of Turlock RWQCF shall be taken at Monitoring Location EFF-001A.

b. The effluent samples from the City of Modesto WQCF shall be taken at Monitoring Location EFF-001B.

3. *Test Species* – Test species shall be fathead minnows (*Pimephales promelas*).

4. *Methods* – The acute toxicity testing samples shall be analyzed using EPA-821-R-02-012, Fifth Edition. Temperature, total residual chlorine, and pH shall be recorded at the time of sample collection. No pH adjustment may be made unless approved by the Executive Officer.

5. *Test Failure* – If an acute toxicity test does not meet all test acceptability criteria, as specified in the test method, the Discharger must re-sample and re-test as soon as possible, not to exceed 7 days following notification of test failure.

B. Chronic Toxicity Testing. When discharging to the North Valley Regional Recycled Water Program Joint Outfall the City of Turlock RWQCF and City of Modesto WQCF shall separately conduct three species chronic toxicity testing to determine whether the effluent is contributing chronic toxicity to the receiving water in accordance with the following chronic toxicity testing requirements:

1. *Monitoring Frequency* –Quarterly three species chronic toxicity testing shall be performed.

2. *Sample Types* – Effluent samples shall be flow proportional 24-hour composites and shall be representative of the volume and quality of the discharge.

   a. The effluent samples from the City of Turlock RWQCF shall be taken at Monitoring Location EFF-001A.

   b. The effluent samples from the City of Modesto WQCF shall be taken at Monitoring Location EFF-001B.

   c. The receiving water control shall be a grab sample obtained from Monitoring Location DMC-001.

3. *Sample Volumes* – Adequate sample volumes shall be collected to provide renewal water to complete the test in the event that the discharge is intermittent.

4. *Test Species* – Chronic toxicity testing measures sublethal (e.g., reduced growth, reproduction) and/or lethal effects to test organisms exposed to an effluent compared to that of the control organisms. The following species shall be used to conduct chronic toxicity tests:

   a. The cladoceran, water flea, *Ceriodaphnia dubia* (survival and reproduction test);

   b. The fathead minnow, *Pimephales promelas* (larval survival and growth test); and

   c. The green alga, *Selenastrum capricornutum* (growth test).

5. Methods – The presence of chronic toxicity shall be estimated as specified in *Short-term Methods for Estimating the Chronic Toxicity of Effluents and Receiving Waters to Freshwater Organisms, Fourth Edition*, EPA/821-R-02-013, October 2002.

6. Reference Toxicant – As required by the SIP, all chronic toxicity tests shall be conducted with concurrent testing with a reference toxicant and shall be reported with the chronic toxicity test results.

7. *Dilutions* – For routine and accelerated chronic toxicity monitoring, it is not necessary to perform the test using a dilution series. The test may be performed using 100% effluent and one control. For TRE monitoring, the chronic toxicity testing shall be performed using the dilution series identified in Table E-6, below, unless an alternative dilution

series is detailed in the submitted TRE Action Plan. A receiving water control or laboratory water control may be used as the diluent.

Table E-6. Chronic Toxicity Testing Dilution Series

Sample	Dilutions[1] (%)					Control
	100	75	50	25	12.5	
% Effluent	100	75	50	25	12.5	0
% Control Water	0	25	50	75	87.5	100

[1]Receiving water control or laboratory water control may be used as the diluent.

8. *Test Failure* – The Discharger must re-sample and re-test as soon as possible, but no later than fourteen (14) days after receiving notification of a test failure. A test failure is defined as follows:

   a. The reference toxicant test or the effluent test does not meet all test acceptability criteria as specified in the *Short-term Methods for Estimating the Chronic Toxicity of Effluents and Receiving Waters to Freshwater Organisms, Fourth Edition*, EPA/821-R-02-013, October 2002 (Method Manual), and its subsequent amendments or revisions; or

   b. The percent minimum significant difference (PMSD) measured for the test exceeds the upper PMSD bound variability criterion in Table 6 on page 52 of the Method Manual. (A retest is only required in this case if the test results do not exceed the monitoring trigger specified in the Special Provision at section VI. 2.a.iii. of the Order.)

C. WET Testing Notification Requirements. The Discharger shall notify the Central Valley Water Board within 24-hours after the receipt of test results exceeding the monitoring trigger during regular or accelerated monitoring, or an exceedance of the acute toxicity effluent limitation.

D. WET Testing Reporting Requirements. All toxicity test reports shall include the contracting laboratory's complete report provided to the Discharger and shall be in accordance with the appropriate "Report Preparation and Test Review" sections of the method manuals. At a minimum, whole effluent toxicity monitoring shall be reported as follows:

1. **Chronic WET Reporting.** Regular chronic toxicity monitoring results shall be reported to the Central Valley Water Board within 30 days following completion of the test, and shall contain, at minimum:

   a. The results expressed in TUc, measured as 100/NOEC, and also measured as 100/LC50, 100/EC25, 100/IC25, and 100/IC50, as appropriate.

   b. The statistical methods used to calculate endpoints;

   c. The statistical output page, which includes the calculation of the percent minimum significant difference (PMSD);

   d. The dates of sample collection and initiation of each toxicity test; and

   e. The results compared to the numeric toxicity monitoring trigger.

   Additionally, the monthly self-monitoring reports shall contain an updated chronology of chronic toxicity test results expressed in TUc, and organized by test species, type of test (survival, growth or reproduction), and monitoring frequency, i.e., either quarterly, monthly, accelerated, or Toxicity Reduction Evaluation (TRE).

2. **Acute WET Reporting.** Acute toxicity test results shall be submitted with the monthly discharger self-monitoring reports and reported as percent survival.

3. **TRE Reporting.** Reports for TREs shall be submitted in accordance with the schedule contained in the Discharger's approved TRE Workplan, or as amended by the Discharger's TRE Action Plan.

4. **Quality Assurance (QA).** The Discharger must provide the following information for QA purposes:

   a. Results of the applicable reference toxicant data with the statistical output page giving the species, NOEC, LOEC, type of toxicant, dilution water used, concentrations used, PMSD, and dates tested.

   b. The reference toxicant control charts for each endpoint, which include summaries of reference toxicant tests performed by the contracting laboratory.

   c. Any information on deviations or problems encountered and how they were dealt with.

VI. LAND DISCHARGE MONITORING REQUIREMENTS – NOT APPLICABLE

VII. RECYCLING MONITORING REQUIREMENTS – NOT APPLICABLE

VIII. RECEIVING WATER MONITORING REQUIREMENTS

A. Monitoring Locations DMC-001 and DMC-002

1. When discharging to the North Valley Regional Recycled Water Program Joint Outfall the Discharger shall monitor the Delta-Mendota Canal at Monitoring Locations DMC-001 and DMC-002 as follows:

Table E-7. Receiving Water Monitoring Requirements

Parameter	Units	Sample Type	Minimum Sampling Frequency	Required Analytical Test Method
Conventional Pollutants				
pH	standard units	Grab	1/Week[2]	[1]
Non-Conventional Pollutants				
Ammonia (as N)	mg/L	Grab	1/Week	[1]
Dissolved Oxygen	mg/L	Grab	1/Week[2]	[1]
Electrical Conductivity @ 25°C	µmhos/cm	Grab	1/Week	[1]
Hardness, Total (as $CaCO_3$)	mg/L	Grab	1/Month	[1]
Temperature	°C	Grab	1/Week[2]	[1]
Turbidity	NTU	Grab	1/Week[2]	[1]

[1] Pollutants shall be analyzed using the analytical methods described in 40 C.F.R. part 136 or by methods approved by the Central Valley Water Board or the State Water Board.

[2] A hand-held field meter may be used, provided the meter utilizes a U.S. EPA-approved algorithm/method and is calibrated and maintained in accordance with the manufacturer's instructions. A calibration and maintenance log for each meter used for monitoring required by this Monitoring and Reporting Program shall be maintained at the Facility.

2. In conducting the receiving water sampling, a log shall be kept of the receiving water conditions throughout the reach bounded by DMC-001 and DMC-002 when discharging to the Delta Mendota Canal. Attention shall be given to the presence of:

   a. Floating or suspended matter;

b. Discoloration;

c. Bottom deposits;

d. Aquatic life;

e. Visible films, sheens, or coatings;

f. Fungi, slimes, or objectionable growths; and

g. Potential nuisance conditions.

Notes on receiving water conditions shall be summarized in the monitoring report.

IX. OTHER MONITORING REQUIREMENTS

A. City of Modesto WQCF Filtration System and Ultraviolet Light (UV) Disinfection System

1. **Monitoring Locations FIL-001, FIL-002, UVS-001, and UVS-002**

a. When discharging to the North Valley Regional Recycled Water Program Joint Outfall the City of Modesto shall monitor the filtration systems at Monitoring Locations FIL-001 and FIL-002 and the UV disinfection systems at Monitoring Locations UVS-001 and UVS-002 as follows:

Table E-8. Filtration System and UV Disinfection System Monitoring Requirements

Parameter	Units	Sample Type	Monitoring Location	Minimum Sampling Frequency
Flow	MGD	Meter	UVS-001A, UVS-002A	Continuous[1]
Turbidity	NTU	Meter	FIL-001, FIL-002	Continuous[1,2]
Number of UV banks in operation	Number	Observation	N/A	Continuous[1]
UV Transmittance	Percent (%)	Meter	UVS-001A, UVS-002A	Continuous[1]
UV Dose[3]	mJ/cm ^{2}	Calculated	N/A	Continuous[1]
Total Coliform Organisms	MPN/100mL	Grab	UVS-001A, UVS-002A	1/Day

[1] For continuous analyzers, the Discharger shall report documented routine meter maintenance activities including date, time of day, and duration, in which the analyzer(s) is not in operation. If analyzer(s) fail to provide continuous monitoring for more than two hours and influent and/or effluent from the disinfection process is not diverted for retreatment, the Discharger shall obtain and report hourly manual and/or grab sample results. The Discharger shall not decrease power settings or reduce the number of UV lamp banks in operation while the continuous analyzers are out of service and water is being disinfected.

[2] Report daily average and maximum turbidity.

[3] Report daily minimum hourly average UV dose and daily average UV dose. The minimum hourly average dose shall consist of lowest hourly average dose provided in any channel that had at least one bank of lamps operating during the hour interval. For channels that did not operate for the entire hour interval, the dose will be averaged based on the actual operation time.

B. Effluent and Receiving Water Characterization (2019)

1. **Monthly Monitoring.** Monthly samples for one year shall be collected from the effluent (Monitoring Locations EFF-001A and EFF-001B) and upstream receiving water (Monitoring Location DMC-001) and analyzed for the constituents listed in Table E-9, below. Monthly monitoring shall begin in June 2019 (12 consecutive samples, evenly distributed throughout the 12-month monitoring period) and the results of such

monitoring shall be submitted to the Central Valley Water Board with the monthly self-monitoring reports. Each individual monitoring event shall provide representative sample results for the effluent is required only during months where there is discharge, and can be coordinated with equivalent monitoring performed under separate Orders. The timing of the monitoring may be modified upon approval by the Executive Officer.

The Discharger may cease monitoring for the following constituents if they are not detected in the first 3 monthly samples: total cyanide, asbestos, dioxin, and EPA Method 608 polychlorinated biphenyls (PCB's) and chlorinated pesticides.

1. **Concurrent Sampling.** Effluent and receiving water sampling shall be performed at approximately the same time of day, on the same date (i.e., both sites collected in the morning or afternoon or within a reasonable period on the same day). Reasonable variances from this timing are permitted if safety concerns prohibit sample collection and are adequately documented.

2. **Sample Type.** All receiving water samples shall be taken as grab samples. Effluent samples shall be taken as described in Table E-9, below.

Table E-9. Effluent Characterization Monitoring

Parameter	Units	Effluent Sample Type	Maximum Reporting Level[1]
2- Chloroethyl vinyl ether	µg/L	Grab	1
Acrolein	µg/L	Grab	2
Acrylonitrile	µg/L	Grab	2
Benzene	µg/L	Grab	0.5
Bromoform	µg/L	Grab	0.5
Carbon Tetrachloride	µg/L	Grab	0.5
Chlorobenzene	µg/L	Grab	0.5
Chloroethane	µg/L	Grab	0.5
Chloroform	µg/L	Grab	2
Chloromethane	µg/L	Grab	2
Dibromochloromethane[2]	µg/L	Grab	0.5
Dichlorobromomethane[2]	µg/L	Grab	0.5
Dichloromethane	µg/L	Grab	2
Ethylbenzene	µg/L	Grab	2
Hexachlorobenzene	µg/L	Grab	1
Hexachlorobutadiene	µg/L	Grab	1
Hexachloroethane	µg/L	Grab	1
Methyl bromide (Bromomethane)	µg/L	Grab	1
Naphthalene	µg/L	Grab	10
Parachlorometa cresol	µg/L	Grab	--
Tetrachloroethene	µg/L	Grab	0.5
Toluene	µg/L	Grab	2
trans-1,2-Dichloroethylene	µg/L	Grab	1
Trichloroethene	µg/L	Grab	2
Vinyl chloride	µg/L	Grab	0.5
Methyl-tert-butyl ether (MTBE)	µg/L	Grab	--
Trichlorofluoromethane	µg/L	Grab	--
1,1,1-Trichloroethane	µg/L	Grab	0.5
1,1-dichloroethane	µg/L	Grab	0.5
1,1-dichloroethylene	µg/L	Grab	0.5
1,2-dichloropropane	µg/L	Grab	0.5
1,3-dichloropropylene	µg/L	Grab	0.5

Parameter	Units	Effluent Sample Type	Maximum Reporting Level[1]
1,1,2,2-tetrachloroethane	µg/L	Grab	0.5
1,1,2-Trichloro-1,2,2-Trifluoroethane	µg/L	Grab	0.5
1,2,4-trichlorobenzene	µg/L	Grab	1
1,2-dichoroethane	µg/L	Grab	0.5
1,2-dichlorobenzene	µg/L	Grab	0.5
1,3-dichlorobenzene	µg/L	Grab	0.5
1,4-dichlorobenzene	µg/L	Grab	0.5
Styrene	µg/L	Grab	--
Xylenes	µg/L	Grab	--
1,2-Benzanthracene	µg/L	Grab	5
1,2-Diphenylhydrazine	µg/L	Grab	1
2-Chlorophenol	µg/L	Grab	5
2,4-Dichlorophenol	µg/L	Grab	5
2,4-Dimethylphenol	µg/L	Grab	2
2,4-Dinitrophenol	µg/L	Grab	5
2,4-Dinitrotoluene	µg/L	Grab	5
2,4,6-Trichlorophenol	µg/L	Grab	10
2,6-Dinitrotoluene	µg/L	Grab	5
2-Nitrophenol	µg/L	Grab	10
2-Chloronaphthalene	µg/L	Grab	10
3,3'-Dichlorobenzidine	µg/L	Grab	5
3,4-Benzofluoranthene	µg/L	Grab	10
4-Chloro-3-methylphenol	µg/L	Grab	5
4,6-Dinitro-2-methylphenol	µg/L	Grab	10
4-Nitrophenol	µg/L	Grab	10
4-Bromophenyl phenyl ether	µg/L	Grab	10
4-Chlorophenyl phenyl ether	µg/L	Grab	5
Acenaphthene	µg/L	Grab	1
Acenaphthylene	µg/L	Grab	10
Anthracene	µg/L	Grab	10
Benzidine	µg/L	Grab	5
Benzo(a)pyrene (3,4-Benzopyrene)	µg/L	Grab	2
Benzo(g,h,i)perylene	µg/L	Grab	5
Benzo(k)fluoranthene	µg/L	Grab	2
Bis(2-chloroethoxy) methane	µg/L	Grab	5
Bis(2-chloroethyl) ether	µg/L	Grab	1
Bis(2-chloroisopropyl) ether	µg/L	Grab	10
Bis(2-ethylhexyl) phthalate[2,3]	µg/L	Grab	5
Butyl benzyl phthalate	µg/L	Grab	10
Chrysene	µg/L	Grab	5
Di-n-butylphthalate	µg/L	Grab	10
Di-n-octylphthalate	µg/L	Grab	10
Dibenzo(a,h)-anthracene	µg/L	Grab	0.1
Diethyl phthalate	µg/L	Grab	10
Dimethyl phthalate	µg/L	Grab	10
Fluoranthene	µg/L	Grab	10
Fluorene	µg/L	Grab	10
Hexachlorocyclopentadiene	µg/L	Grab	5
Indeno(1,2,3-c,d)pyrene	µg/L	Grab	0.05

Parameter	Units	Effluent Sample Type	Maximum Reporting Level[1]
Isophorone	µg/L	Grab	1
N-Nitrosodiphenylamine	µg/L	Grab	1
N-Nitrosodimethylamine	µg/L	Grab	5
N-Nitrosodi-n-propylamine	µg/L	Grab	5
Nitrobenzene	µg/L	Grab	10
Pentachlorophenol	µg/L	Grab	1
Phenanthrene	µg/L	Grab	5
Phenol	µg/L	Grab	1
Pyrene	µg/L	Grab	10
Aluminum[2]	µg/L	24-hr Composite[4]	--
Antimony	µg/L	24-hr Composite[4]	5
Arsenic	µg/L	24-hr Composite[4]	10
Asbestos	µg/L	24-hr Composite[4]	--
Barium	µg/L	24-hr Composite[4]	--
Beryllium	µg/L	24-hr Composite[4]	2
Cadmium	µg/L	24-hr Composite[4]	0.5
Chromium (III)	µg/L	24-hr Composite[4]	50
Chromium (VI)	µg/L	24-hr Composite[4]	10
Copper	µg/L	24-hr Composite[4]	0.5
Cyanide	µg/L	24-hr Composite[4]	5
Fluoride	µg/L	24-hr Composite[4]	--
Iron	µg/L	24-hr Composite[4]	--
Lead	µg/L	24-hr Composite[4]	0.5
Mercury	µg/L	Grab	0.5
Manganese	µg/L	24-hr Composite[4]	--
Molybdenum	µg/L	24-hr Composite[4]	--
Nickel	µg/L	24-hr Composite[4]	20
Selenium	µg/L	24-hr Composite[4]	2
Silver	µg/L	24-hr Composite[4]	2
Thallium	µg/L	24-hr Composite[4]	1
Tributyltin	µg/L	24-hr Composite[4]	--
Zinc	µg/L	24-hr Composite[4]	20
4,4'-DDD	µg/L	24-hr Composite[4]	0.05
4,4'-DDE	µg/L	24-hr Composite[4]	0.05
4,4'-DDT	µg/L	24-hr Composite[4]	0.01
alpha-Endosulfan	µg/L	24-hr Composite[4]	0.02
alpha-Hexachlorocyclohexane (BHC)	µg/L	24-hr Composite[4]	0.01
Alachlor	µg/L	24-hr Composite[4]	--
Aldrin	µg/L	24-hr Composite[4]	0.005
beta-Endosulfan	µg/L	24-hr Composite[4]	0.01
beta-Hexachlorocyclohexane	µg/L	24-hr Composite[4]	0.005
Chlordane	µg/L	24-hr Composite[4]	0.1
delta-Hexachlorocyclohexane	µg/L	24-hr Composite[4]	0.005
Dieldrin	µg/L	24-hr Composite[4]	0.01
Endosulfan sulfate	µg/L	24-hr Composite[4]	0.01
Endrin	µg/L	24-hr Composite[4]	0.01
Endrin Aldehyde	µg/L	24-hr Composite[4]	0.01
Heptachlor	µg/L	24-hr Composite[4]	0.01
Heptachlor Epoxide	µg/L	24-hr Composite[4]	0.02
Lindane (gamma-	µg/L	24-hr Composite[4]	0.5

Parameter	Units	Effluent Sample Type	Maximum Reporting Level[1]
Hexachlorocyclohexane)			
PCB-1016	µg/L	24-hr Composite[4]	0.5
PCB-1221	µg/L	24-hr Composite[4]	0.5
PCB-1232	µg/L	24-hr Composite[4]	0.5
PCB-1242	µg/L	24-hr Composite[4]	0.5
PCB-1248	µg/L	24-hr Composite[4]	0.5
PCB-1254	µg/L	24-hr Composite[4]	0.5
PCB-1260	µg/L	24-hr Composite[4]	0.5
Toxaphene	µg/L	24-hr Composite[4]	--
Atrazine	µg/L	24-hr Composite[4]	--
Bentazon	µg/L	24-hr Composite[4]	--
Carbofuran	µg/L	24-hr Composite[4]	--
2,4-D	µg/L	24-hr Composite[4]	--
Dalapon	µg/L	24-hr Composite[4]	--
1,2-Dibromo-3-chloropropane (DBCP)	µg/L	24-hr Composite[4]	--
Di(2-ethylhexyl)adipate	µg/L	24-hr Composite[4]	--
Dinoseb	µg/L	24-hr Composite[4]	--
Diquat	µg/L	24-hr Composite[4]	--
Endothal	µg/L	24-hr Composite[4]	--
Ethylene Dibromide	µg/L	24-hr Composite[4]	--
Methoxychlor	µg/L	24-hr Composite[4]	--
Molinate (Ordram)	µg/L	24-hr Composite[4]	--
Oxamyl	µg/L	24-hr Composite[4]	--
Picloram	µg/L	24-hr Composite[4]	--
Simazine (Princep)	µg/L	24-hr Composite[4]	--
Thiobencarb	µg/L	24-hr Composite[4]	--
2,3,7,8-TCDD (Dioxin)	µg/L	24-hr Composite[4]	--
2,4,5-TP (Silvex)	µg/L	24-hr Composite[4]	--
Diazinon[2]	µg/L	24-hr Composite[4]	--
Chlorpyrifos[2]	µg/L	24-hr Composite[4]	--
Ammonia (as N)[2]	mg/L	24-hr Composite[4]	--
Boron	µg/L	24-hr Composite[4]	--
Chloride	mg/L	24-hr Composite[4]	--
Cryptosporidium[5]	Oocysts/100 mL	Grab	--
Flow[2]	MGD	Meter	--
Foaming Agents (MBAS)	µg/L	24-hr Composite[4]	--
Hardness (as $CaCO_3$)	mg/L	24-hr Composite[4]	--
Giardia[5]	Oocysts/100 mL	Grab	
Mercury, Methyl	ng/L	Grab	--
Nitrate (as N)[2]	mg/L	24-hr Composite[4]	--
Nitrite (as N)[2]	mg/L	24-hr Composite[4]	--
Total Kjeldahl Nitrogen	mg/L	24-hr Composite[4]	--
pH[2]	Std Units	Grab	--
Phosphorus, Total (as P)	mg/L	24-hr Composite[4]	--
Specific conductance (EC)[2]	µmhos/cm	24-hr Composite[4]	--
Sulfate	mg/L	24-hr Composite[4]	--
Sulfide (as S)	mg/L	24-hr Composite[4]	--
Sulfite (as SO_3)	mg/L	24-hr Composite[4]	--
Temperature[2]	^oC	Grab	--
Total Dissolved Solids (TDS)	mg/L	Grab or 24-hr Composite[4]	--

[1] The reporting levels required in this table for priority pollutant constituents are established based on Section 2.4.2 and Appendix 4 of the SIP.
[2] The Discharger is not required to conduct effluent monitoring for constituents that have already been sampled in a given month, as required in Table E-3, except for hardness, pH, and temperature, which shall be conducted concurrently with the effluent sampling
[3] In order to verify if bis (2-ethylhexyl) phthalate is truly present, the Discharger shall take steps to assure that sample containers, sampling apparatus, and analytical equipment are not sources of the detected contaminant
[4] 24-hour flow proportional composite.
[5] Only quarterly monitoring is required.

X. REPORTING REQUIREMENTS

A. General Monitoring and Reporting Requirements

1. The Discharger shall comply with all Standard Provisions (Attachment D) related to monitoring, reporting, and recordkeeping.
2. Upon written request of the Central Valley Water Board, the Discharger shall submit a summary monitoring report. The report shall contain both tabular and graphical summaries of the monitoring data obtained during the previous year(s).
3. **Compliance Time Schedules.** For compliance time schedules included in the Order, the Discharger shall submit to the Central Valley Water Board, on or before each compliance due date, the specified document or a written report detailing compliance or noncompliance with the specific date and task. If noncompliance is reported, the Discharger shall state the reasons for noncompliance and include an estimate of the date when the Discharger will be in compliance. The Discharger shall notify the Central Valley Water Board by letter when it returns to compliance with the compliance time schedule.
4. The Discharger shall report to the Central Valley Water Board any toxic chemical release data it reports to the State Emergency Response Commission within 15 days of reporting the data to the Commission pursuant to section 313 of the "*Emergency Planning and Community Right to Know Act*" of 1986.

B. Self-Monitoring Reports (SMR's)

1. The Discharger shall electronically submit SMR's using the State Water Board's California Integrated Water Quality System (CIWQS) Program Web site (http://www.waterboards.ca.gov/ciwqs/index.html). The CIWQS Web site will provide additional information for SMR submittal in the event there will be a planned service interruption for electronic submittal. The SMR shall include data for both the City of Turlock RWQCF and the City of Modesto WQCF.
2. The Discharger shall report in the SMR the results for all monitoring specified in this MRP under sections III through IX. The Discharger shall submit monthly, quarterly, semiannual, and annual SMR's including the results of all required monitoring using U.S. EPA-approved test methods or other test methods specified in this Order. SMR's are to include all new monitoring results obtained since the last SMR was submitted. If the Discharger monitors any pollutant more frequently than required by this Order, the results of this monitoring shall be included in the calculations and reporting of the data submitted in the SMR.
3. Monitoring periods and reporting for all required monitoring shall be completed according to the following schedule:

Table E-10. Monitoring Periods and Reporting Schedule

Sampling Frequency	Monitoring Period Begins On…	Monitoring Period	SMR Due Date
Continuous	Permit effective date	All	Submit with monthly SMR
1/Day	Permit effective date	(Midnight through 11:59 PM) or any 24-hour period that reasonably represents a calendar day for purposes of sampling.	Submit with monthly SMR
1/Week	Permit effective date	Sunday through Saturday	Submit with monthly SMR
1/Month	Permit effective date	1st day of calendar month through last day of calendar month	First day of second calendar month following month of sampling
1/Quarter	Permit effective date	1 January through 31 March 1 April through 30 June 1 July through 30 September 1 October through 31 December	1 May 1 August 1 November 1 February of following year
1/Year	Permit effective date	1 January through 31 December	1 February of following year

4. **Reporting Protocols.** The Discharger shall report with each sample result the applicable Reporting Level (RL) and the current laboratory's Method Detection Limit (MDL), as determined by the procedure in 40 C.F.R. part 136.

   The Discharger shall report the results of analytical determinations for the presence of chemical constituents in a sample using the following reporting protocols:

   a. Sample results greater than or equal to the RL shall be reported as measured by the laboratory (i.e., the measured chemical concentration in the sample).

   b. Sample results less than the RL, but greater than or equal to the laboratory's MDL, shall be reported as "Detected, but Not Quantified," or DNQ. The estimated chemical concentration of the sample shall also be reported.

      For the purposes of data collection, the laboratory shall write the estimated chemical concentration next to DNQ. The laboratory may, if such information is available, include numerical estimates of the data quality for the reported result. Numerical estimates of data quality may be percent accuracy (± a percentage of the reported value), numerical ranges (low to high), or any other means considered appropriate by the laboratory.

   c. Sample results less than the laboratory's MDL shall be reported as "Not Detected," or ND.

   d. Dischargers are to instruct laboratories to establish calibration standards so that the Minimum Level (ML) value (or its equivalent if there is differential treatment of samples relative to calibration standards) is the lowest calibration standard. At no time is the Discharger to use analytical data derived from extrapolation beyond the lowest point of the calibration curve.

5. **Multiple Sample Data.** When determining compliance with an AMEL, AWEL, or MDEL for priority pollutants and more than one sample result is available, the Discharger shall

compute the arithmetic mean unless the data set contains one or more reported determinations of "Detected, but Not Quantified" (DNQ) or "Not Detected" (ND). In those cases, the Discharger shall compute the median in place of the arithmetic mean in accordance with the following procedure:

a. The data set shall be ranked from low to high, ranking the reported ND determinations lowest, DNQ determinations next, followed by quantified values (if any). The order of the individual ND or DNQ determinations is unimportant.

b. The median value of the data set shall be determined. If the data set has an odd number of data points, then the median is the middle value. If the data set has an even number of data points, then the median is the average of the two values around the middle unless one or both of the points are ND or DNQ, in which case the median value shall be the lower of the two data points where DNQ is lower than a value and ND is lower than DNQ.

6. The Discharger shall submit SMR's in accordance with the following requirements:

a. The Discharger shall arrange all reported data in a tabular format. The data shall be summarized to clearly illustrate whether the facility is operating in compliance with interim and/or final effluent limitations. The Discharger is not required to duplicate the submittal of data that is entered in a tabular format within CIWQS. When electronic submittal of data is required and CIWQS does not provide for entry into a tabular format within the system, the Discharger shall electronically submit the data in a tabular format as an attachment.

b. The Discharger shall attach a cover letter to the SMR. The information contained in the cover letter shall clearly identify violations of the WDR's; discuss corrective actions taken or planned; and the proposed time schedule for corrective actions. Identified violations must include a description of the requirement that was violated and a description of the violation.

c. The Discharger shall attach all laboratory analysis sheets, including quality assurance/quality control information, with all its SMR's for which sample analyses were performed.

7. The Discharger shall submit in the SMR's calculations and reports in accordance with the following requirements:

a. **Average Dry Weather Flow.** The Discharger shall calculate and report the average dry weather flow for the effluent. The average dry weather flow shall be calculated as specified in Section VII.C of the Limitations and Discharge Requirements and reported in the December SMR

b. **Calendar Annual Average Limitations**. For constituents with effluent limitations specified as "calendar annual average" (electrical conductivity) the Discharger shall report the calendar annual average in the December SMR. The annual average shall be calculated as specified in Section VII.I of the Limitations and Discharge Requirements.

c. **Mass Loading Limitations**. For BOD_5, TSS, and ammonia, the Discharger shall calculate and report the mass loading (lbs/day) in the SMR's. The mass loading shall be calculated as follows:

Mass Loading (lbs/day) = Flow (MGD) x Concentration (mg/L) x 8.34

When calculating daily mass loading, the daily average flow and constituent concentration shall be used. For weekly average mass loading, the weekly average

flow and constituent concentration shall be used. For monthly average mass loading, the monthly average flow and constituent concentration shall be used.

d. **Removal Efficiency (BOD_5 and TSS).** The Discharger shall calculate and report the percent removal of BOD_5 and TSS in the SMR's. The percent removal shall be calculated as specified in Section VII.A. of the Limitations and Discharge Requirements.

e. **Total Coliform Organisms Effluent Limitations**. The Discharger shall calculate and report the 7-day median of total coliform organisms for the effluent. The 7-day median of total coliform organisms shall be calculated as specified in Section VII.D of the Limitations and Discharge Requirements.

f. **Dissolved Oxygen Receiving Water Limitations**. The Discharger shall report monthly in the self-monitoring report the dissolved oxygen concentrations measured in the effluent (EFF-002) and in the receiving water (DMC-001 and DMC-002).

g. **Turbidity Receiving Water Limitations**. The Discharger shall calculate and report the turbidity increase in the receiving water applicable to the natural turbidity condition specified in Section V.A.17.a-e. of the Limitations and Discharge Requirements.

h. **Temperature Receiving Water Limitations**. The Discharger shall calculate and report the temperature change in the receiving water based on the difference in temperature at Monitoring Locations DMC-001 and DMC-002.

i. **Chlorpyrifos and Diazinon Effluent Limitations**. The Discharger shall calculate and report the value of S_{AMEL} and S_{AWEL} for the effluent (EFF-001A and EFF-001B), using the equation in Effluent Limitations IV.A.1.g and IV.A.2.f and consistent with the Compliance Determination Language in Section VII.J of the Limitations and Discharge Requirements.

j. **Total Mercury Annual Loading Limitations**. The Discharger shall calculate the effluent annul total mercury for the City of Turlock RWQCF and the effluent annul total mercury for the City of Modesto WQCF in accordance with Section VII.J of the Limitations and Discharge Requirements and report the loadings in the December SMR.

C. Discharge Monitoring Reports (DMR's)

1. The Discharger shall electronically submit DMR's using the State Water Board's California Integrated Water Quality System (CIWQS) Program internet website (http://www.waterboards.ca.gov/water_issues/programs/ciwqs/). The CIWQS internet website will provide additional information for DMR submittal in the event there will be a planned service interruption for electronic submittal. Hard copy submittals are not required. The DMR shall include data for both the City of Turlock RWQCF and the City of Modesto WQCF.

D. Other Reports

1. **Special Study Reports and Progress Reports**. As specified in the compliance time schedules required in the Special Provisions contained in section VI of the Order, special study and progress reports shall be submitted in accordance with the following reporting requirements in Table E-11 for the City of Turlock, and Table E-12 for the City of Modesto. At minimum, the progress reports shall include a discussion of the status of final compliance, whether the Discharger is on schedule to meet the final compliance date, and the remaining tasks to meet the final compliance date.

Table E-11. Reporting Requirements for Special Provisions Reports for the City of Turlock RWQCF

Special Provision	Reporting Requirements
Mixing Zone Validation Study, Work Plan and Schedule (Special Provision VI.C.2.b)	**Within 120 days** after the initiation of the discharge to the Delta-Mendota Canal
Mixing Zone Validation Study, Final Study Report (Special Provision VI.C.2.b)	**Within 1 year** of submission of the work plan and schedule
Salinity Source Control Program, Annual Reports (Special Provision VI.C.3.a)	**1 June,** annually (beginning 1 June 2018)[1]

1. Submittal of the annual reports are only required if the discharge to the DMC has been initiated. Otherwise, the Discharger can submit a letter by the due date indicating discharge to the DMC has not initiated.

Table E-12. Reporting Requirements for Special Provisions Reports for the City of Modesto WQCF

Special Provision	Reporting Requirements
Salinity Source Control Program, Annual Reports (Special Provision VI.C.3.a)	**1 June,** annually (beginning 1 June 2018)[1]

1. Submittal of the annual reports are only required if the discharge to the DMC has been initiated. Otherwise, the Discharger can submit a letter by the due date indicating discharge to the DMC has not initiated.

2. The Discharger shall report the results of any special studies, acute and chronic toxicity testing, TRE/TIE, PMP, and Pollution Prevention Plan required by Special Provisions – VI.C. The Discharger shall submit reports with the first monthly SMR scheduled to be submitted on or immediately following the report due date in compliance with SMR reporting requirements described in subsection X.B above.

3. By 1 November 2017, the Discharger shall submit a report outlining reporting levels (RL's), method detection limits (MDL's), and analytical methods for the constituents listed in tables E-2, E-3, E-4, E-6, E-7, and E-8. In addition, no less than 6 months prior to conducting the effluent and receiving water characterization monitoring required in Section IX.B, the Discharger shall submit a report outlining RL's, MDL's, and analytical methods for the constituents listed in Table E-9. The Discharger shall comply with the monitoring and reporting requirements for CTR constituents as outlined in section 2.3 and 2.4 of the SIP. The maximum required reporting levels for priority pollutant constituents shall be based on the Minimum Levels (ML's) contained in Appendix 4 of the SIP, determined in accordance with Section 2.4.2 and Section 2.4.3 of the SIP. In accordance with Section 2.4.2 of the SIP, when there is more than one ML value for a given substance, the Central Valley Water Board shall include as RL's, in the permit, all ML values, and their associated analytical methods, listed in Appendix 4 that are below the calculated effluent limitation. The Discharger may select any one of those cited analytical methods for compliance determination. If no ML value is below the effluent limitation, then the Central Valley Water Board shall select as the RL, the lowest ML value, and its associated analytical method, listed in Appendix 4 for inclusion in the permit. Table E-8 provides required maximum reporting levels in accordance with the SIP.

ATTACHMENT F – FACT SHEET

Contents

I. PERMIT INFORMATION F-3
II. FACILITY DESCRIPTION F-4
A. DESCRIPTION OF WASTEWATER AND BIOSOLIDS TREATMENT AND CONTROLS F-5
B. DISCHARGE POINTS AND RECEIVING WATERS F-6
C. SUMMARY OF EXISTING REQUIREMENTS AND SELF-MONITORING REPORT (SMR) DATA F-6
D. COMPLIANCE SUMMARY F-6
E. PLANNED CHANGES F-6
III. APPLICABLE PLANS, POLICIES, AND REGULATIONS F-7
A. LEGAL AUTHORITIES F-7
B. CALIFORNIA ENVIRONMENTAL QUALITY ACT (CEQA) F-7
C. STATE AND FEDERAL LAWS, REGULATIONS, POLICIES, AND PLANS F-7
D. IMPAIRED WATER BODIES ON CWA 303(D) LIST F-9
E. OTHER PLANS, POLICIES AND REGULATIONS – NOT APPLICABLE F-10
IV. RATIONALE FOR EFFLUENT LIMITATIONS AND DISCHARGE SPECIFICATIONS F-10
A. DISCHARGE PROHIBITIONS F-11
B. TECHNOLOGY-BASED EFFLUENT LIMITATIONS F-12
1. SCOPE AND AUTHORITY F-12
2. APPLICABLE TECHNOLOGY-BASED EFFLUENT LIMITATIONS F-12
C. WATER QUALITY-BASED EFFLUENT LIMITATIONS (WQBEL'S) F-14
1. SCOPE AND AUTHORITY F-14
2. APPLICABLE BENEFICIAL USES AND WATER QUALITY CRITERIA AND OBJECTIVES F-14
3. DETERMINING THE NEED FOR WQBEL'S F-32
4. WQBEL CALCULATIONS F-60
5. WHOLE EFFLUENT TOXICITY (WET) F-64
D. FINAL EFFLUENT LIMITATION CONSIDERATIONS F-66
1. MASS-BASED EFFLUENT LIMITATIONS F-66
2. AVERAGING PERIODS FOR EFFLUENT LIMITATIONS F-67
3. SATISFACTION OF ANTI-BACKSLIDING REQUIREMENTS F-67
4. ANTIDEGRADATION POLICIES F-67
5. STRINGENCY OF REQUIREMENTS FOR INDIVIDUAL POLLUTANTS F-72
E. INTERIM EFFLUENT LIMITATIONS – NOT APPLICABLE F-76
F. LAND DISCHARGE SPECIFICATIONS – NOT APPLICABLE F-76
G. RECYCLING SPECIFICATIONS – NOT APPLICABLE F-76
V. RATIONALE FOR RECEIVING WATER LIMITATIONS F-76
A. SURFACE WATER F-76
B. GROUNDWATER – NOT APPLICABLE F-77
VI. RATIONALE FOR PROVISIONS F-77
A. STANDARD PROVISIONS F-77
B. SPECIAL PROVISIONS F-77
1. REOPENER PROVISIONS F-77
2. SPECIAL STUDIES AND ADDITIONAL MONITORING REQUIREMENTS F-79
3. BEST MANAGEMENT PRACTICES AND POLLUTION PREVENTION F-82
4. CONSTRUCTION, OPERATION, AND MAINTENANCE SPECIFICATIONS F-82

5. SPECIAL PROVISIONS FOR MUNICIPAL FACILITIES (POTW'S ONLY) – NOT APPLICABLE F-83
6. OTHER SPECIAL PROVISIONS F-83
7. COMPLIANCE SCHEDULES – NOT APPLICABLE F-83
VII. RATIONALE FOR MONITORING AND REPORTING REQUIREMENTS F-83
A. INFLUENT MONITORING F-84
B. EFFLUENT MONITORING F-84
C. WHOLE EFFLUENT TOXICITY TESTING REQUIREMENTS F-85
D. RECEIVING WATER MONITORING F-85
1. SURFACE WATER F-85
E. OTHER MONITORING REQUIREMENTS F-85
VIII. PUBLIC PARTICIPATION F-86
A. NOTIFICATION OF INTERESTED PARTIES F-86
B. WRITTEN COMMENTS F-86
C. PUBLIC HEARING F-86
D. RECONSIDERATION OF WASTE DISCHARGE REQUIREMENTS F-86
E. INFORMATION AND COPYING F-87
F. REGISTER OF INTERESTED PERSONS F-87
G. ADDITIONAL INFORMATION F-87

Tables

TABLE F-1. FACILITY INFORMATION F-3
TABLE F-2. BASIN PLAN BENEFICIAL USES F-8
TABLE F-3. 303(D) LIST O'NEILL FOREBAY, SAN LUIS RESERVOIR, AND MENDOTA POOL F-10
TABLE F-4. SUMMARY OF TECHNOLOGY-BASED EFFLUENT LIMITATIONS – CITY OF TURLOCK RWQCF F-13
TABLE F-5. SUMMARY OF TECHNOLOGY-BASED EFFLUENT LIMITATIONS – CITY OF MODESTO WQCF F-14
TABLE F-6. BIS (2-ETHYLHEXYL) PHTHALATE LIMITATIONS BASED ON FULL DILUTION CREDITS VERSUS FACILITY PERFORMANCE F-22
TABLE F-7. SUMMARY OF CTR CRITERIA FOR HARDNESS-DEPENDENT METALS F-26
TABLE F-8. VERIFICATION OF CTR COMPLIANCE FOR COPPER F-31
TABLE F-9. VERIFICATION OF CTR COMPLIANCE FOR LEAD F-32
TABLE F-10. SALINITY WATER QUALITY CRITERIA/OBJECTIVES F-58
TABLE F-11. SUMMARY OF WATER QUALITY-BASED EFFLUENT LIMITATIONS – CITY OF TURLOCK RWQCF F-62
TABLE F-12. SUMMARY OF WATER QUALITY-BASED EFFLUENT LIMITATIONS – CITY OF MODESTO WQCF F-63
TABLE F-13. SUMMARY OF COSTS FOR ADDING UV DISINFECTION SYSTEM F-70
TABLE F-14. SUMMARY OF FINAL EFFLUENT LIMITATIONS – CITY OF TURLOCK RWQCF F-72
TABLE F-15. SUMMARY OF FINAL EFFLUENT LIMITATIONS – CITY OF MODESTO WQCF F-75

ATTACHMENT F – FACT SHEET

As described in section II.B of this Order, the Central Valley Water Board incorporates this Fact Sheet as findings of the Central Valley Water Board supporting the issuance of this Order. This Fact Sheet includes the legal requirements and technical rationale that serve as the basis for the requirements of this Order.

This Order has been prepared under a standardized format to accommodate a broad range of discharge requirements for Dischargers in California. Only those sections or subsections of this Order that are specifically identified as "not applicable" have been determined not to apply to this Discharger. Sections or subsections of this Order not specifically identified as "not applicable" are fully applicable to this Discharger.

I. PERMIT INFORMATION

The following table summarizes administrative information related to the Facility.

Table F-1. Facility Information

WDID	5C500108001	5C500102001
CIWQS Facility Place ID	266737	241146 (primary treatment) 273037 (secondary treatment)
Discharger	City of Turlock	City of Modesto
Name of Facility	Regional Water Quality Control Facility	Water Quality Control Facility
Facility Address	901 S. Walnut Road	1221 Sutter Avenue
	Turlock, CA 95380	Modesto, CA 95351
	Stanislaus County	Stanislaus County
Facility Contact, Title and Phone	Michael Cooke, Municipal Services Director, (209) 668-5590	Larry Parlin, Director of Utilities, (209) 577-6200
Authorized Person to Sign and Submit Reports	Michael Cooke, Municipal Services Director, (209) 668-5590	Larry Parlin, Director of Utilities, (209) 577-6200
Mailing Address	156 South Broadway Avenue, Suite 270, Turlock, CA 95380	1221 Sutter Avenue, Modesto, CA 95351
Billing Address	Same as Mailing Address	Same as Mailing Address
Type of Facility	Publicly Owned Treatment Plant (POTW)	POTW
Major or Minor Facility	Major	Major
Threat to Water Quality	1	1
Complexity	A	A
Pretreatment Program	Yes	Yes
Recycling Requirements	Producer	Not applicable
Facility Permitted Flow	14.2 million gallons per day (MGD), average dry weather flow[1]	14.9 MGD average dry weather flow[2]
Facility Design Flow	20 MGD, average dry weather flow	14.9 MGD average dry weather flow
Watershed	Middle San Joaquin – Lower Merced – Lower Stanislaus	Middle San Joaquin – Lower Merced – Lower Stanislaus

[1] Although a flow of up to 25.4 MGD is supported by the Antidegradation Analysis, this Order limits the flow to 14.2 MGD (see sections IV.B.2, IV.C.2.c, and IV.D.4 of this Fact Sheet for additional information).

[2] Although a flow of up to 27.3 MGD is supported by the Antidegradation Analysis, this Order limits the flow to 14.9 MGD (see sections IV.B.2, IV.C.2.c, and IV.D.4 of this Fact Sheet for additional information).

Receiving Water	Delta-Mendota Canal	Delta-Mendota Canal
Receiving Water Type	Inland Surface Water	Inland Surface Water

A. The City of Turlock owns and operates the City of Turlock, Regional Water Quality Control Facility (RWQCF), a POTW. The City of Modesto owns and operates the City of Modesto, Water Quality Control Facility (WQCF), a POTW. Together, the City of Turlock and the City of Modesto are hereinafter referred to as the Discharger and the City of Turlock RWQCF and the City of Modesto WQCF are hereinafter referred to as the Facilities.

For the purposes of this Order, references to the "discharger" or "permittee" in applicable federal and state laws, regulations, plans, or policy are held to be equivalent to references to the Discharger herein.

B. The City of Turlock and the City of Modesto propose to discharge treated wastewater from a common outfall to the Delta-Mendota Canal, a water of the United States, within the Middle San Joaquin – Lower Merced – Lower Stanislaus watershed. The discharges to the Delta-Mendota Canal have not been previously regulated by waste discharge requirements (WDR's) or a National Pollutant Discharge Elimination System (NPDES) permit. Attachment B provides a map of the area around the Facility. Attachment C provides a flow schematic of the Facility.

Prior to making any change in the point of discharge, place of use, or purpose of use of treated wastewater that results in a decrease of flow in any portion of a watercourse, the Discharger must file a petition with the State Water Board, Division of Water Rights, and receive approval for such a change. The State Water Board retains the jurisdictional authority to enforce such requirements under Water Code section 1211. The Cities of Turlock and Modesto have submitted a Water Code Section 1211 wastewater change petition to the State Water Board for approval to divert their discharges from the San Joaquin River.

C. The City of Turlock filed a report of waste discharge (ROWD) and submitted an application for the issuance of new WDR's and NPDES permit on 26 June 2015. The application was deemed complete on 13 August 2015.

D. The City of Modesto filed a ROWD and submitted an application for the issuance of new WDR's and NPDES permit on 22 June 2015. The application was deemed complete on 3 September 2015.

II. FACILITY DESCRIPTION

The City of Turlock RWQCF provides sewerage services to the City of Turlock and the community service districts of Denair and Keyes, and receives up to 2 MGD of primary treated effluent from the City of Ceres. The City of Turlock RWQCF serves a population of approximately 88,000 and 12 significant industrial users (SIU's). The design average dry weather flow capacity of the City of Turlock RWQCF is 20 MGD.

The City of Modesto WQCF provides sewerage services to the City of Modesto, the community of Empire, and a portion of the City of Ceres, serving a population of approximately 256,000. In addition to domestic wastewater, the City of Modesto operates a pretreatment program that has issued 17 liquid waste hauler permits, two groundwater clean-up permits, and 50 industrial wastewater permits. The City of Modesto is currently constructing their Phase 2 upgrade and expansion project to increase the tertiary treatment capacity of the WQCF from 2.3 MGD to 14.9 MGD (see section II.E for additional information).

The Cities of Turlock and Modesto and the Del Puerto Water District (DPWD) are the partner agencies for the North Valley Regional Recycled Water Program (NVRRWP). The NVRRWP proposes to introduce and convey, on a space availability basis, up to 59,000 acre-feet per year

(AFY) (approximately 52.7 MGD at build out) of tertiary treated recycled water from the City of Turlock RWQCF and City of Modesto WQCF via a pipeline to the Delta-Mendota Canal, where it will be beneficially reused as a result of DPWD's diversions from the Delta-Mendota Canal at locations downstream of the outfall. The United States Bureau of Reclamation (USBR) operates the Delta-Mendota Canal in coordination with other agencies and downstream water users.

A. Description of Wastewater and Biosolids Treatment and Controls

1. **NVRRWP Facilities.** The purpose of the NVRRWP project is to address water supply shortages within the DPWD service area on the west side of the San Joaquin River in San Joaquin, Stanislaus and Merced Counties, south of the Sacramento-San Joaquin River Delta, and south of Delta (SOD) Central Valley Project Improvement Act (CVPIA)-designated Refuges. The NVRRWP facilities will consist of a pipeline from the City of Turlock RWQCF conveying recycled water to the City of Modesto WQCF, and transmission facilities, including the new pump station plant upgrades, and all necessary transmission pipelines to transmit and deliver recycled water from City of Modesto WQCF to a new combined outfall to the Delta-Mendota Canal. See section II.E of this Fact Sheet for additional information.

2. **City of Turlock RWQCF.** The treatment system at the City of Turlock RWQCF is designed to treat an average dry weather flow of 20 MGD; however, current average flows to the facility are approximately 10.3 MGD. Preliminary and primary treatment consists of influent screening, grit removal, and primary floatation. Secondary treatment consists of activated biofiltration for biochemical oxygen demand (BOD) and total suspended solids (TSS) reduction and nitrification, and secondary clarification. Tertiary treatment consists of high rate clarification with chemical addition and cloth disk filters. Disinfection is achieved with chlorination with dechlorination using sodium bisulfite. The City of Turlock RWQCF provides up to 2 MGD of recycled water for cooling purposes to the Walnut Energy Center, a 250 megawatt (MW) gas-fired cogeneration facility owned by Turlock Irrigation District. The City of Turlock RWQCF also provides an average of 100,000 gallons per day (gpd) of recycled water for turf irrigation to Pedretti Park, a 20-acre regional sports complex owned by the City of Turlock. The City of Turlock RWQCF currently discharges to the San Joaquin River.

   Solids handling consists of gravity belt thickener, anaerobic digestion, sludge drying beds, and beneficial reuse of biosolids via land application to farmland and co-compost for public distribution.

   Order R5-2015-0027 (NPDES Permit No. CA0078948) regulates the City of Turlock's discharge to the San Joaquin River and also includes recycling specifications, groundwater limitations, emergency storage basin operating requirements, pretreatment requirements, and sludge/biosolids treatment or discharge specifications. This Order only regulates the discharge from the City of Turlock RWQCF to the Delta-Mendota Canal and does not duplicate the requirements in Order R5-2015-0027.

3. **City of Modesto WQCF.** The treatment system at the City of Modesto WQCF consists of two separate primary and secondary treatment facilities. The primary treatment plant consists of screening, grit removal, and primary clarification. Sludge from the clarifiers is transferred to thickeners, then processed and stabilized through anaerobic digesters. Digested sludge is transferred to holding tanks where it is periodically drawn to unlined drying beds, with supernatant flows routed to the septage disposal station for blending with influent wastewater. The City of Modesto applies the stabilized sludge as a soil amendment on their 2,526 acre ranch, which is regulated by separate WDR Order 94-030.

After clarification, primary effluent is directed to the secondary treatment facility, where approximately half of the primary effluent receives treatment with fixed film reactors and then is combined with primary effluent in an aerated recirculation channel. Flow in the recirculation channel is then distributed to three parallel facultative ponds for further treatment, and then transferred to one of two storage ponds before being discharged or applied to the City's 2,525-acre ranch at agronomic rates.

The City of Modesto is in the process of upgrading the Facility by constructing a two-step membrane bioreactor (MBR) process that includes an aerated activated sludge process and a membrane separation process. An oxidation ditch provides activated sludge biological treatment, reducing BOD and providing nitrogen removal (i.e., nitrification/denitrification). Ultraviolet light (UV) radiation disinfects the filtered wastewater prior to storage or discharge. Phase 1A construction of the tertiary treatment facilities (2.3 MGD) was completed on 1 July 2010. Phase 2, which provides a tertiary treatment capacity of 14.9 MGD was completed in July 2015 and testing is currently underway. Phases 3 – 5 are planned for the future with a full build-out treatment capacity of 27.3 MGD (see section II.E of this Fact Sheet). The City of Modesto WQCF currently discharges to the San Joaquin River.

Since 1999, the City of Modesto has been separating cannery wastes from the domestic wastewater. A separate 60-inch outfall transports cannery wastewaters to the ranch land located next to the secondary-level treatment facility. The cannery wastewater is applied directly to the ranch land at agronomic rates during the canning season (July-September). Land application of cannery and secondary wastewaters to the ranch land is regulated by separate WDR Order 99-112.

Order R5-2012-0031 regulates the City of Modesto's discharge to the San Joaquin River and also includes pretreatment requirements. This Order only regulates the discharge from the City of Modesto WQCF to the Delta-Mendota Canal and does not duplicate the requirements in Orders 94-030, 99-112, or R5-2015-0031.

B. Discharge Points and Receiving Waters

1. The City of Turlock RWQCF is located in Section 21, T5S, R10E, MDB&M, as shown in Attachment B, a part of this Order.
2. The City of Modesto WQCF is located in Section 4, T5S, R8E, MDB&M, as shown in Attachment B, a part of this Order.
3. Treated municipal wastewater from the City of Turlock RWQCF and the City of Modesto WQCF will be discharged at Discharge Point 002 to the Delta-Mendota Canal, a water of the United States, at a point latitude 37° 29' 37" N and longitude 121° 11' 40" W.

C. Summary of Existing Requirements and Self-Monitoring Report (SMR) Data

This section is not applicable as this is a new permit for discharges to the Delta-Mendota Canal from the City of Turlock RWQCF and City of Modesto WQCF.

D. Compliance Summary

This section is not applicable as this is a new permit for discharges to the Delta-Mendota Canal from the City of Turlock RWQCF and City of Modesto WQCF.

E. Planned Changes

1. The NVRRWP partner agencies propose to implement a regional solution to address water supply shortages in DPWD's service area on the west side of the San Joaquin River and in San Joaquin, Stanislaus, and Merced Counties, south off the Sacramento-San Joaquin Delta, and south of Delta Central Valley Project Improvement Act-

designated Refuges. The project would deliver up to 59,000 AFY of recycled water produced by the Cities of Turlock and Modesto via the Delta-Mendota Canal. In the January 2015 Draft Environmental Impact Report/Statement, the NVRRWP identified two alternatives that use different pipeline alignments to convey water to the Delta-Mendota Canal. The preferred alignment is the Combined Alignment Alternative, which includes the City of Turlock constructing a pipeline from the City of Turlock RWQCF to the City of Modesto WQCF, and the City of Modesto constructing transmission facilities, including new pump station upgrades, and all necessary transmission pipelines to transmit and deliver recycled water from the City of Modesto WQCF to the Delta-Mendota Canal. The schedule for the project is uncertain and is dependent on negotiations with other interested parties and obtaining the necessary approvals.

2. The City of Turlock expects flows to the Facility to increase to 25.4 MGD due to growth by 2045. Therefore, the City of Turlock is planning to expand the treatment capacity of the RWQCF as needed to accommodate growth in the service area. However, current average flows are approximately 10.3 MGD and an expansion is not expected to be necessary during the term of this Order.

3. The City of Modesto is in the process of upgrading and expanding the WQCF by constructing a two-step MBR process that includes an aerated activated sludge process and a membrane separation process. Phase 1A construction of the tertiary treatment facilities (2.3 MGD) was completed on 1 July 2010. Phase 2, which expands the tertiary treatment capacity of the Modesto WQCF to 14.9 MGD was completed in July 2015 and testing is currently underway. Phase 3 would increase the tertiary treatment capacity to 19.1 MGD, and full build out (Phases 4-5) would increase the tertiary treatment capacity of 27.3 MGD. There is no specific time frame for initiation of Phase 3, which will depend on population growth in the service area.

III. APPLICABLE PLANS, POLICIES, AND REGULATIONS

The requirements contained in this Order are based on the requirements and authorities described in this section.

A. Legal Authorities

This Order serves as WDR's pursuant to article 4, chapter 4, division 7 of the California Water Code (commencing with section 13260). This Order is also issued pursuant to section 402 of the federal Clean Water Act (CWA) and implementing regulations adopted by the U.S. EPA and chapter 5.5, division 7 of the Water Code (commencing with section 13370). It shall serve as an NPDES permit for point source discharges from this Facility to surface waters.

B. California Environmental Quality Act (CEQA)

Under Water Code section 13389, this action to adopt an NPDES permit is exempt from the provisions of Chapter 3 of CEQA, (commencing with section 21100) of Division 13 of the Public Resources Code.

The City of Modesto is the CEQA lead agency and USBR is the NEPA lead agency. The City of Modesto and USBR prepared the Environmental Impact Report/Environmental Impact Statement (EIR/EIS) for the NVRRWP project. The Draft EIR/EIS was issued in January 2015 and the Final EIR/EIS was issued in June 2015.

C. State and Federal Laws, Regulations, Policies, and Plans

1. **Water Quality Control Plan.** Requirements of this Order specifically implement the applicable Water Quality Control Plans.

a. **Basin Plan.** The Central Valley Water Board adopted a Water Quality Control Plan for the Water Quality Control Plan, Fourth Edition (Revised October 2011), for the Sacramento and San Joaquin River Basins (hereinafter Basin Plan) that designates beneficial uses, establishes water quality objectives, and contains implementation programs and policies to achieve those objectives for all waters addressed through the plan. Requirements in this Order implement the Basin Plan. In addition, the Basin Plan implements State Water Board Resolution 88-63, which established state policy that all waters, with certain exceptions, should be considered suitable or potentially suitable for municipal or domestic supply. Beneficial uses applicable to the Delta-Mendota Canal are as follows:

Table F-2. Basin Plan Beneficial Uses

Discharge Point	Receiving Water Name	Beneficial Use(s)
002	Delta-Mendota Canal	Existing: Municipal and domestic water supply (MUN); agricultural supply, including irrigation and stock watering (AGR); water contact recreation (REC-1); non-contact water recreation (REC-2); warm freshwater habitat (WARM); and wildlife habitat (WILD).

2. **National Toxics Rule (NTR) and California Toxics Rule (CTR).** U.S. EPA adopted the NTR on 22 December 1992, and later amended it on 4 May 1995 and 9 November 1999. About forty criteria in the NTR applied in California. On 18 May 2000, U.S. EPA adopted the CTR. The CTR promulgated new toxics criteria for California and, in addition, incorporated the previously adopted NTR criteria that were applicable in the state. The CTR was amended on 13 February 2001. These rules contain federal water quality criteria for priority pollutants.

3. **State Implementation Policy.** On 2 March 2000, the State Water Board adopted the Policy for Implementation of Toxics Standards for Inland Surface Waters, Enclosed Bays, and Estuaries of California (State Implementation Policy or SIP). The SIP became effective on 28 April 2000, with respect to the priority pollutant criteria promulgated for California by the U.S. EPA through the NTR and to the priority pollutant objectives established by the Central Valley Water Board in the Basin Plan. The SIP became effective on 18 May 2000, with respect to the priority pollutant criteria promulgated by the U.S. EPA through the CTR. The State Water Board adopted amendments to the SIP on 24 February 2005 that became effective on 13 July 2005. The SIP establishes implementation provisions for priority pollutant criteria and objectives and provisions for chronic toxicity control. Requirements of this Order implement the SIP.

4. **Antidegradation Policy.** Federal regulation 40 C.F.R. section 131.12 requires that the state water quality standards include an antidegradation policy consistent with the federal policy. The State Water Board established California's antidegradation policy in State Water Board Resolution 68-16 ("Statement of Policy with Respect to Maintaining High Quality of Waters in California"). Resolution 68-16 is deemed to incorporate the federal antidegradation policy where the federal policy applies under federal law. Resolution 68-16 requires that existing water quality be maintained unless degradation is justified based on specific findings. The Central Valley Water Board's Basin Plan implements, and incorporates by reference, both the State and federal antidegradation policies. The permitted discharge must be consistent with the antidegradation provision of 40 C.F.R. section 131.12 and State Water Board Resolution 68-16.

5. **Anti-Backsliding Requirements.** Sections 402(o) and 303(d)(4) of the CWA and federal regulations at 40 C.F.R. section 122.44(l) restrict backsliding in NPDES permits. These

anti-backsliding provisions require that effluent limitations in a reissued permit must be as stringent as those in the previous permit, with some exceptions in which limitations may be relaxed.

6. **Domestic Water Quality.** In compliance with Water Code section 106.3, it is the policy of the State of California that every human being has the right to safe, clean, affordable, and accessible water adequate for human consumption, cooking, and sanitary purposes. This Order promotes that policy by requiring discharges to meet maximum contaminant levels designed to protect human health and ensure that water is safe for domestic use.

7. **Endangered Species Act Requirements.** This Order does not authorize any act that results in the taking of a threatened or endangered species or any act that is now prohibited, or becomes prohibited in the future, under either the California Endangered Species Act (Fish and Game Code, §§ 2050 to 2097) or the Federal Endangered Species Act (16 U.S.C.A. §§ 1531 to 1544). This Order requires compliance with effluent limits, receiving water limits, and other requirements to protect the beneficial uses of waters of the state. The Discharger is responsible for meeting all requirements of the applicable Endangered Species Act.

8. **Emergency Planning and Community Right to Know Act.** Section 13263.6(a) of the Water Code, requires that *"the Regional Water Board shall prescribe effluent limitations as part of the waste discharge requirements of a POTW for all substances that the most recent toxic chemical release data reported to the state emergency response commission pursuant to Section 313 of the Emergency Planning and Community Right to Know Act of 1986 (42 U.S.C. Sec. 11023) (EPCRA) indicate as discharged into the POTW, for which the State Water Board or the Regional Water Board has established numeric water quality objectives, and has determined that the discharge is or may be discharged at a level which will cause, have the reasonable potential to cause, or contribute to, an excursion above any numeric water quality objective"*.

   The most recent toxic chemical data report does not indicate any reportable off-site releases or discharges to the collection system for these facilities. Therefore, a reasonable potential analysis (RPA) based on information from EPCRA cannot be conducted. Based on information from EPCRA, there is no reasonable potential to cause or contribute to an excursion above any numeric water quality objectives included within the Basin Plan or in any State Water Board plan, so no effluent limitations are included in this permit pursuant to Water Code section 13263.6(a).

   However, as detailed elsewhere in this Order, available effluent data indicate that there are constituents present in the effluent that have a reasonable potential to cause or contribute to exceedances of water quality standards and require inclusion of effluent limitations based on federal and state laws and regulations.

9. **Storm Water Requirements.** U.S. EPA promulgated federal regulations for storm water on 16 November 1990 in 40 C.F.R. parts 122, 123, and 124. The NPDES Industrial Storm Water Program regulates storm water discharges from wastewater treatment facilities. Wastewater treatment plants are applicable industries under the storm water program and are obligated to comply with the federal regulations. The City of Turlock RWQCF and City of Modesto WQCF capture and treat all storm water that falls on-site, therefore, coverage under the General Storm Water Permit is not required.

D. Impaired Water Bodies on CWA 303(d) List

1. Under section 303(d) of the 1972 CWA, states, territories and authorized tribes are required to develop lists of water quality limited segments. The waters on these lists do not meet water quality standards, even after point sources of pollution have installed the

minimum required levels of pollution control technology. On 26 June 2015 U.S. EPA gave final approval to California's 2012 section 303(d) List of Water Quality Limited Segments. The Basin Plan references this list of Water Quality Limited Segments (WQLS's), which are defined as "…*those sections of lakes, streams, rivers or other fresh water bodies where water quality does not meet (or is not expected to meet) water quality standards even after the application of appropriate limitations for point sources* (40 C.F.R. part 130, et seq.)." The Basin Plan also states, "*Additional treatment beyond minimum federal standards will be imposed on dischargers to [WQLSs]. Dischargers will be assigned or allocated a maximum allowable load of critical pollutants so that water quality objectives can be met in the segment*." The Delta-Mendota Canal is not listed as an impaired waterbody on the 2012 303(d) list. O'Neill Forebay and the San Luis Reservoir, to which the Delta-Mendota Canal is tributary, are listed as impaired for mercury on the 2012 303(d) list. The Mendota Pool, located at the terminus of the Delta-Mendota Canal, is listed as impaired for mercury and selenium on the 2012 303(d) list.

2. **Total Maximum Daily Loads (TMDL's).** U.S. EPA requires the Central Valley Water Board to develop TMDL's for each 303(d) listed pollutant and water body combination. Table F-3, below, identifies the 303(d) listings and the status of each TMDL.

Table F-3. 303(d) List O'Neill Forebay, San Luis Reservoir, and Mendota Pool

Waterbody	Pollutant	Potential Sources	Proposed TMDL Completion
O'Neill Forebay	Mercury	Source Unknown	2012
San Luis Reservoir	Mercury	Source Unknown	2021
Mendota Pool	Mercury	Source Unknown	2021
	Selenium	Source Unknown	2019

3. The 303(d) listings and TMDL's have been considered in the development of the Order. A pollutant-by-pollutant evaluation of each pollutant of concern is described in IV.C.3 of this Fact Sheet.

E. Other Plans, Policies and Regulations – Not Applicable

IV. RATIONALE FOR EFFLUENT LIMITATIONS AND DISCHARGE SPECIFICATIONS

Effluent limitations and toxic and pretreatment effluent standards established pursuant to sections 301 (Effluent Limitations), 302 (Water Quality Related Effluent Limitations), 304 (Information and Guidelines), and 307 (Toxic and Pretreatment Effluent Standards) of the CWA and amendments thereto are applicable to the discharge.

The CWA mandates the implementation of effluent limitations that are as stringent as necessary to meet water quality standards established pursuant to state or federal law [33 U.S.C., §1311(b)(1)(C); 40 C.F.R. § 122.44(d)(1)]. NPDES permits must incorporate discharge limits necessary to ensure that water quality standards are met. This requirement applies to narrative criteria as well as to criteria specifying maximum amounts of particular pollutants. Pursuant to federal regulations, 40 C.F.R. section 122.44(d)(1)(i), NPDES permits must contain limits that control all pollutants that "*are or may be discharged at a level which will cause, have the reasonable potential to cause, or contribute to an excursion above any state water quality standard, including state narrative criteria for water quality*." Federal regulations, 40 C.F.R. section 122.44(d)(1)(vi), further provide that "*[w]here a state has not established a water*

quality criterion for a specific chemical pollutant that is present in an effluent at a concentration that causes, has the reasonable potential to cause, or contributes to an excursion above a narrative criterion within an applicable State water quality standard, the permitting authority must establish effluent limits."

The CWA requires point source dischargers to control the amount of conventional, non-conventional, and toxic pollutants that are discharged into the waters of the United States. The control of pollutants discharged is established through effluent limitations and other requirements in NPDES permits. There are two principal bases for effluent limitations in the Code of Federal Regulations: 40 C.F.R. section 122.44(a) requires that permits include applicable technology-based limitations and standards; and 40 C.F.R. section 122.44(d) requires that permits include WQBEL's to attain and maintain applicable numeric and narrative water quality criteria to protect the beneficial uses of the receiving water where numeric water quality objectives have not been established. The Basin Plan at page IV-17.00, contains an implementation policy, "*Policy for Application of Water Quality Objectives*", that specifies that the Central Valley Water Board "will, on a case-by-case basis, adopt numerical limitations in orders which will implement the narrative objectives." This Policy complies with 40 C.F.R. section 122.44(d)(1). With respect to narrative objectives, the Central Valley Water Board must establish effluent limitations using one or more of three specified sources, including: (1) U.S. EPA's published water quality criteria, (2) a proposed state criterion (i.e., water quality objective) or an explicit state policy interpreting its narrative water quality criteria (i.e., the Central Valley Water Board's "Policy for Application of Water Quality Objectives")(40 C.F.R. § 122.44(d)(1)(vi)(A), (B) or (C)), or (3) an indicator parameter.

The Basin Plan includes numeric site-specific water quality objectives and narrative objectives for toxicity, chemical constituents, discoloration, radionuclides, and tastes and odors. The narrative toxicity objective states: "*All waters shall be maintained free of toxic substances in concentrations that produce detrimental physiological responses in human, plant, animal, or aquatic life.*" (Basin Plan at III-8.00) The Basin Plan states that material and relevant information, including numeric criteria, and recommendations from other agencies and scientific literature will be utilized in evaluating compliance with the narrative toxicity objective. The narrative chemical constituents objective states that waters shall not contain chemical constituents in concentrations that adversely affect beneficial uses. At minimum, "…*water designated for use as domestic or municipal supply (MUN) shall not contain concentrations of chemical constituents in excess of the maximum contaminant levels (MCLs)*" in Title 22 of CCR. The Basin Plan further states that, to protect all beneficial uses, the Central Valley Water Board may apply limits more stringent than MCLs. The narrative tastes and odors objective states: "*Water shall not contain taste- or odor-producing substances in concentrations that impart undesirable tastes or odors to domestic or municipal water supplies or to fish flesh or other edible products of aquatic origin, or that cause nuisance, or otherwise adversely affect beneficial uses.*"

A. Discharge Prohibitions

1. **Prohibition III.A (No discharge or application of waste other than that described in this Order).** This prohibition is based on Water Code section 13260 that requires filing of a ROWD before discharges can occur. The Discharger submitted ROWD's for the discharges described in this Order; therefore, discharges not described in this Order are prohibited.

2. **Prohibition III.B (No bypasses or overflow of untreated wastewater, except under the conditions at CFR section 122.41(m)(4)).** As stated in section I.G of Attachment D, Standard Provisions, this Order prohibits bypass from any portion of the treatment facility. Federal regulations, 40 C.F.R. section 122.41(m), define "bypass" as the intentional diversion of waste streams from any portion of a treatment facility. This section of the federal regulations, 40 C.F.R. section 122.41(m)(4), prohibits bypass

unless it is unavoidable to prevent loss of life, personal injury, or severe property damage. In considering the Regional Water Board's prohibition of bypasses, the State Water Board adopted a precedential decision, Order No. WQO 2002-0015, which cites the federal regulations, 40 C.F.R. section 122.41(m), as allowing bypass only for essential maintenance to assure efficient operation.

3. **Prohibition III.C (No controllable condition shall create a nuisance).** This prohibition is based on Water Code section 13050 that requires water quality objectives established for the prevention of nuisance within a specific area. The Basin Plan prohibits conditions that create a nuisance.

4. **Prohibition III.D (No inclusion of pollutant free wastewater shall cause improper operation of the Facility's systems).** This prohibition is based on 40 C.F.R. section 122.41 et seq. that requires the proper design and operation of treatment facilities.

B. Technology-Based Effluent Limitations

1. Scope and Authority

Section 301(b) of the CWA and implementing U.S. EPA permit regulations at 40 C.F.R. section 122.44 require that permits include conditions meeting applicable technology-based requirements at a minimum, and any more stringent effluent limitations necessary to meet applicable water quality standards. The discharge authorized by this Order must meet minimum federal technology-based requirements based on Secondary Treatment Standards at 40 C.F.R. part 133.

Regulations promulgated in 40 C.F.R. section 125.3(a)(1) require technology-based effluent limitations for municipal Dischargers to be placed in NPDES permits based on Secondary Treatment Standards or Equivalent to Secondary Treatment Standards.

The Federal Water Pollution Control Act Amendments of 1972 (PL 92-500) established the minimum performance requirements for POTW's [defined in section 304(d)(1)]. Section 301(b)(1)(B) of that Act requires that such treatment works must, as a minimum, meet effluent limitations based on secondary treatment as defined by the U.S. EPA Administrator.

Based on this statutory requirement, U.S. EPA developed secondary treatment regulations, which are specified in 40 C.F.R. part 133. These technology-based regulations apply to all municipal wastewater treatment plants and identify the minimum level of effluent quality attainable by secondary treatment in terms of biochemical oxygen demand (BOD_5), total suspended solids (TSS), and pH.

2. Applicable Technology-Based Effluent Limitations

a. **BOD_5 and TSS.** Federal regulations at 40 C.F.R. part 133, establish the minimum weekly and monthly average level of effluent quality attainable by secondary treatment for BOD_5 and TSS. A daily maximum effluent limitation for BOD_5 and TSS is also included in the Order to ensure that the treatment works are not organically overloaded and operate in accordance with design capabilities. In addition, 40 C.F.R. section 133.102, in describing the minimum level of effluent quality attainable by secondary treatment, states that the 30-day average percent removal shall not be less than 85 percent. This Order contains a limitation requiring an average of 85 percent removal of BOD_5 and TSS over each calendar month. This Order requires WQBEL's that are equal to or more stringent than the secondary technology-based treatment described in 40 C.F.R. part 133 (see section

IV.C.3.a of the Fact Sheet for a discussion on pathogens which includes WQBEL's for BOD_5 and TSS).

b. **pH**. The secondary treatment regulations at 40 C.F.R. part 133 also require that pH be maintained between 6.0 and 9.0 standard units. This Order, however, requires more stringent WQBEL's for pH to comply with the Basin Plan's water quality objectives for pH.

c. **Flow**

i. **City of Turlock RWQCF.** The Facility was designed to provide a tertiary level of treatment for up to a design average dry weather flow of 20 MGD. However, as discussed in sections IV.C.2.c and IV.D.4 of this Fact Sheet, this Order limits the effluent flow to an average dry weather flow of 14.2 MGD, which reflects the flow at which the City of Turlock is able to consistently comply with all effluent limitations in this Order.

ii. **City of Modesto WQCF.** Upon completion of the Phase 2 upgrade and expansion project, the City of Modesto WQCF will be designed to provide a tertiary level of treatment for up to a design average dry weather flow of 14.9 MGD. Therefore, this Order contains an average dry weather discharge flow effluent limit of 14.9 MGD.

Summary of Technology-based Effluent Limitations
Discharge Point 002

Table F-4. Summary of Technology-based Effluent Limitations – City of Turlock RWQCF

Parameter	Units	Effluent Limitations				
		Average Monthly	Average Weekly	Maximum Daily	Instantaneous Minimum	Instantaneous Maximum
Average Dry Weather Flow	MGD	14.2[1]	--	--	--	--
Conventional Pollutants						
Biochemical Oxygen Demand (5-day @ 20°C)[2]	mg/L	30	45	--	--	--
	lbs/day[3]	3,600	5,300	--	--	--
	% Removal	85	--	--	--	--
pH[2]	standard units	--	--	--	6.0	9.0
Total Suspended Solids[2]	mg/L	30	45	--	--	--
	lbs/day[3]	3,600	5,300	--	--	--
	% Removal	85	--	--	--	--

1 The average dry weather discharge flow shall not exceed 14.2 MGD.
2 Note that more stringent WQBEL's for BOD_5, pH, and TSS are applicable and are established as final effluent limitations in this Order (see section IV.C.3.a of this Fact Sheet).
3 Based on an average dry weather flow of 14.2 MGD.

Table F-5. Summary of Technology-based Effluent Limitations – City of Modesto WQCF

Parameter	Units	Effluent Limitations				
		Average Monthly	Average Weekly	Maximum Daily	Instantaneous Minimum	Instantaneous Maximum
Average Dry Weather Flow	MGD	14.9[1]	--	--	--	--
Conventional Pollutants						
Biochemical Oxygen Demand (5-day @ 20°C)[2]	mg/L	30	45	--	--	--
	lbs/day[3]	3,800	5,600	--	--	--
	% Removal	85	--	--	--	--
pH[2]	standard units	--	--	--	6.5	8.5
Total Suspended Solids[2]	mg/L	30	45	--	--	--
	lbs/day[3]	3,800	5,600	--	--	--
	% Removal	85	--	--	--	--

1 The average dry weather discharge flow shall not exceed 14.9 MGD.
2 Note that more stringent WQBEL's for BOD_5, pH, and TSS are applicable and are established as final effluent limitations in this Order (see section IV.C.3.a of this Fact Sheet).
4 Based on an average dry weather flow of 14.9 MGD.

C. Water Quality-Based Effluent Limitations (WQBEL's)

1. Scope and Authority

CWA Section 301(b) and 40 C.F.R. section 122.44(d) require that permits include limitations more stringent than applicable federal technology-based requirements where necessary to achieve applicable water quality standards. This Order contains requirements, expressed as a technology equivalence requirement, more stringent than secondary treatment requirements that are necessary to meet applicable water quality standards. The rationale for these requirements, which consist of tertiary treatment, is discussed in section IV.C.3 of this Fact Sheet.

Section 122.44(d)(1)(i) of 40 C.F.R. requires that permits include effluent limitations for all pollutants that are or may be discharged at levels that have the reasonable potential to cause or contribute to an exceedance of a water quality standard, including numeric and narrative objectives within a standard. Where reasonable potential has been established for a pollutant, but there is no numeric criterion or objective for the pollutant, WQBEL's must be established using: (1) U.S. EPA criteria guidance under CWA section 304(a), supplemented where necessary by other relevant information; (2) an indicator parameter for the pollutant of concern; or (3) a calculated numeric water quality criterion, such as a proposed state criterion or policy interpreting the state's narrative criterion, supplemented with other relevant information, as provided in section 122.44(d)(1)(vi).

The process for determining reasonable potential and calculating WQBEL's when necessary is intended to protect the designated uses of the receiving water as specified in the Basin Plan, and achieve applicable water quality objectives and criteria that are contained in other state plans and policies, or any applicable water quality criteria contained in the CTR and NTR.

2. Applicable Beneficial Uses and Water Quality Criteria and Objectives

The Basin Plan designates beneficial uses, establishes water quality objectives, and contains implementation programs and policies to achieve those objectives for all waters addressed through the plan. In addition, the Basin Plan implements State Water Board Resolution No. 88-63, which established state policy that all waters, with certain

exceptions, should be considered suitable or potentially suitable for municipal or domestic supply.

The Basin Plan on page II-1.00 states: "*Protection and enhancement of existing and potential beneficial uses are primary goals of water quality planning…*" and with respect to disposal of wastewaters states that "...*disposal of wastewaters is [not] a prohibited use of waters of the State; it is merely a use which cannot be satisfied to the detriment of beneficial uses.*"

The federal CWA section 101(a)(2), states: "*it is the national goal that wherever attainable, an interim goal of water quality which provides for the protection and propagation of fish, shellfish, and wildlife, and for recreation in and on the water be achieved by July 1, 1983.*" Federal Regulations, developed to implement the requirements of the CWA, create a rebuttable presumption that all waters be designated as fishable and swimmable. Federal Regulations, 40 CFR sections 131.2 and 131.10, require that all waters of the State regulated to protect the beneficial uses of public water supply, protection and propagation of fish, shell fish and wildlife, recreation in and on the water, agricultural, industrial and other purposes including navigation. 40 C.F.R. section 131.3(e) defines existing beneficial uses as those uses actually attained after 28 November 1975, whether or not they are included in the water quality standards. Federal Regulation, 40 C.F.R. section 131.10 requires that uses be obtained by implementing effluent limitations, requires that all downstream uses be protected and states that in no case shall a state adopt waste transport or waste assimilation as a beneficial use for any waters of the United States.

a. **Receiving Water and Beneficial Uses.** The Delta-Mendota Canal is a Central Valley Project facility operated and maintained by the San Luis and Delta-Mendota Water Authority under contract with USBR. The Delta-Mendota Canal, completed in 1951, is a 116.5-mile concrete-lined aqueduct that serves as the main conveyance facility for south-of-Delta deliveries. The canal extends approximately 70 miles from the Sacramento-San Joaquin Delta to the O'Neill Forebay and then 46 miles to the Mendota Pool on the San Joaquin River, about 30 miles west of Fresno. The Delta-Mendota Canal carries Central Valley Project water southeasterly from the C.W. "Bill" Jones Pumping Plant along the west side of the San Joaquin Valley and provides water for irrigation supply and wildlife refuges en route. The canal runs south along the western edge of the San Joaquin Valley, parallel to the California Aqueduct for much of its length, but diverges to the east after passing the San Luis Reservoir, which receives a portion of its water from the Delta-Mendota Canal (the remaining portion of water flowing into San Luis Reservoir is brought by the California Aqueduct). Midway along the length of the canal, water is pumped from the canal into O'Neill Forebay and then into the San Luis Reservoir by the Gianelli Pumping-Generating Plant. Occasionally, water from O'Neill Forebay is released into the canal. The Delta-Mendota Canal concludes at the Mendota Pool, a small reservoir created by the Mendota Dam on the San Joaquin River near the town of Mendota. In addition, the Delta-Mendota Canal is hydraulically connected with the State Water Project's California Aqueduct via an intertie with a pumping station and two 108-inch diameter pipes west of the City of Tracy. Refer to section III.C.1. above for a description of the receiving water beneficial uses.

b. **Effluent and Ambient Background Data.** Two Reasonable Potential Analyses (RPA's) were performed for this Order, one for the City of Turlock RWQCF and one for the City of Modesto WQCF. The ambient background data used for both RPA's was based on two samples for priority pollutants collected in the Delta-Mendota Canal on 30 September 2014 and 14 October 2014.

The RPA for the City of Turlock RWQCF, as described in section IV.C.3 of this Fact Sheet, was based on data collected between July 2012 through June 2015, which includes effluent data submitted in SMR's and the ROWD.

The RPA for the City of Modesto WQCF, as described in section IV.C.3 of this Fact Sheet, was based on two samples for priority pollutants collected from the tertiary treatment facility on 13 August 2014 and 30 October 2014.

c. **Assimilative Capacity/Mixing Zone**

The City of Turlock has requested mixing zones and dilution credits for compliance with human health water quality criteria. As discussed below, this Order allows mixing zones and dilution credits for the City of Turlock.

The City of Modesto has not requested a mixing zone or dilution credits; therefore, this Order establishes end-of-pipe effluent limitations with no allowance for dilution within the receiving water for the City of Modesto WQCF.

i. **Receiving Water Characteristics.** The City of Turlock RWQCF and the City of Modesto plan to discharge to the Delta-Mendota Canal. The Delta-Mendota Canal conveys water southeasterly from the Jones Pumping Plant to the Mendota Pool. The canal is located along the west side of the San Joaquin Valley and is 116.5 miles long. The flows in the Delta-Mendota Canal are managed by the USBR. Based on flow data at Jones Pumping Plant from the years 1994 through 2013, the harmonic mean flow of the Delta-Mendota Canal was 2,153 cubic feet per second (cfs).

The new outfall facility will be located adjacent to the east bank of the existing Delta-Mendota Canal. The footprint of the outfall facility will be approximately 30 feet by 50 feet. The structure itself will consist of a reinforced concrete, open-ended rectangular box, situated below and above grade. The box will contain a fixed-point, sharp-crested weir for hydraulic stability. Downstream of the weir, the water will flow over a concrete slab and into the Delta-Mendota Canal, and the outfall structure will be designed so as to require little to no modification or alteration of the existing Delta-Mendota Canal concrete lining. The Delta-Mendota Canal is a trapezoidal structure with an estimated top base width of 99 feet and an estimated bottom base width of 48 feet. Because water movement and elevation in the Delta-Mendota Canal are controlled by a series of gates along its length, water height (or depth) does not vary much throughout the year. Per San Luis & Delta-Mendota Water Authority staff, a water height of 17 feet is representative of the canal across all water year types.

ii. **Regulatory Guidance for Dilution Credits and Mixing Zones.** The City of Turlock has requested mixing zones and dilution credits for compliance with human health water quality criteria. The Central Valley Water Board has the discretion to accept or deny mixing zones and dilution credits. The CWA directs the states to adopt water quality standards to protect the quality of its waters. U.S. EPA's current water quality standards regulation authorizes states to adopt general policies, such as mixing zones, to implement state water quality standards (40 C.F.R. § 122.44 and 122.45). The U.S. EPA allows states to have broad flexibility in designing its mixing zone policies. Primary policy and guidance on determining mixing zone and dilution credits is provided by the SIP and the Basin Plan. If no procedure applies in the SIP or the Basin Plan,

then the Central Valley Water Board may use the U.S. EPA *Technical Support Document for Water Quality-Based Toxics Control* (EPA/505/2-90-001)(TSD).

For non-priority pollutant constituents the allowance of mixing zones by the Central Valley Water Board is discussed in the Basin Plan, *Policy for Application of Water Quality Objectives*, which states in part, "*In conjunction with the issuance of NPDES and storm water permits, the Regional Board may designate mixing zones within which water quality objectives will not apply provided the discharger has demonstrated to the satisfaction of the Regional Board that the mixing zone will not adversely impact beneficial uses. If allowed, different mixing zones may be designated for different types of objectives, including, but not limited to, acute aquatic life objectives, chronic aquatic life objectives, human health objectives, and acute and chronic whole effluent toxicity objectives, depending in part on the averaging period over which the objectives apply. In determining the size of such mixing zones, the Regional Board will consider the applicable procedures and guidelines in the EPA's Water Quality Standards Handbook and the [TSD]. Pursuant to EPA guidelines, mixing zones designated for acute aquatic life objectives will generally be limited to a small zone of initial dilution in the immediate vicinity of the discharge.*"

For priority pollutants, the SIP supersedes the Basin Plan mixing zone provisions. Section 1.4.2 of the SIP states, in part, "…*with the exception of effluent limitations derived from TMDL's, in establishing and determining compliance with effluent limitations for applicable human health, acute aquatic life, or chronic aquatic life priority pollutant criteria/objectives or the toxicity objective for aquatic life protection in a basin plan, the Regional Board may grant mixing zones and dilution credits to dischargers…The applicable priority pollutant criteria and objectives are to be met through a water body except within any mixing zone granted by the Regional Board.* ***The allowance of mixing zones is discretionary and shall be determined on a discharge-by-discharge basis.*** *The Regional Board may consider allowing mixing zones and dilution credits only for discharges with a physically identifiable point of discharge that is regulated through an NPDES permit issued by the Regional Board*." [emphasis added]

For completely-mixed discharges, Section1.4.2.1 of the SIP states, "*For completely-mixed discharges, as determined by the RWQCB and based on information provided by the discharger, the amount of receiving water available to dilute the effluent shall be determined by calculating the *dilution ratio (i.e., the critical receiving water flow divided by the effluent flow) using the appropriate flows in Table 3. In no case shall the RWQCB grant a dilution credit that is greater than the calculated dilution ratio. The dilution credit may be set equal to the dilution ratio only if the site-specific conditions concerning the discharge and the receiving water do not indicate that a smaller dilution credit is necessary to protect beneficial uses and meet the conditions of this Policy. If, however, dilution ratios that are calculated using the Table 3 parameters are inappropriate for use due to site-specific issues, the mixing zone and dilution credit shall be determined using site-specific information and procedures detailed for incompletely-mixed discharges."*

For incompletely-mixed discharges, the Discharger must complete an independent mixing zone study to demonstrate to the Central Valley Water Board that a dilution credit is appropriate.

In granting a mixing zone, Section 1.4.2.2 of the SIP requires the following to be met:

"***A mixing zone shall be as small as practicable****. The following conditions must be met in allowing a mixing zone:* [emphasis added]

A: A mixing zone shall not:

1. compromise the integrity of the entire water body;

2. cause acutely toxic conditions to aquatic life passing through the mixing zone;

3. restrict the passage of aquatic life;

4. adversely impact biologically sensitive or critical habitats, including, but not limited to, habitat of species listed under federal or State endangered species laws;

5. produce undesirable or nuisance aquatic life;

6. result in floating debris, oil, or scum;

7. produce objectionable color, odor, taste, or turbidity;

8. cause objectionable bottom deposits;

9. cause nuisance;

10. dominate the receiving water body or overlap a mixing zone from different outfalls; or

11. be allowed at or near any drinking water intake. A mixing zone is not a source of drinking water. To the extent of any conflict between this determination and the Sources of Drinking Water Policy (Resolution No. 88-63), this SIP supersedes the provisions of that policy."

Section 1.4.2.1 of the SIP establishes the authority for the Central Valley Water Board to consider dilution credits based on the mixing zone conditions in a receiving water. Section 1.4.2.1 in part states:

"*The dilution credit, D, is a numerical value associated with the mixing zone that accounts for the receiving water entrained into the discharge. The dilution credit is a value used in the calculation of effluent limitations (described in Section 1.4).* ***Dilution credits may be limited or denied on a pollutant-by-pollutant basis, which may result in a dilution credit for all, some, or no priority pollutants in the discharge.***" [emphasis added]

The mixing zone is thus an administrative construct defined as an area around the outfall that may exceed water quality objectives, but is otherwise protective of the beneficial uses. Dilution is defined as the amount of mixing that has occurred at the edge of this mixing zone under critical conditions, thus protecting the beneficial uses at the concentration and for the duration and frequency required.

iii. **Dilution/Mixing Zone Study Results.** The City of Turlock provided a 20 October 2015 *North Valley Regional Recycled Water Project: Delta-Mendota Canal Mixing Zone Study* (Mixing Zone Study) providing the results of a dilution/mixing zone study. Using the Cornell Mixing Zone Expert System (CORMIX) model, the point of complete mixing downstream of the proposed

outfall to the Delta-Mendota Canal was estimated. A summary of the primary data inputs to the CORMIX model are provided below:

(a) A channel width of 75 feet;

(b) A channel depth of 17 feet;

(c) A surface discharge configuration with a local depth at discharge location of 2 feet and a slope angle between local depth at discharge location and average ambient depth of 34°;

(d) An estimated outfall cross-section of 15 feet wide by 1 foot deep.

Two primary model scenarios were run for use in evaluating potential dilution for human carcinogens consistent with the SIP: 1) one corresponding to a harmonic mean flow of the Delta-Mendota Canal of 2,153 cfs (1,392 MGD) and an effluent flow of 14.2 MGD which represents the highest effluent discharge rate from the City of Turlock RWQCF resulting in compliance with all WQBEL's (see subsection v, below), and 2) one corresponding to a harmonic mean flow of the Delta-Mendota Canal of 2,153 cfs (1,392 MGD) and an effluent flow of 52.7 MGD which represents the total flow at build-out from the City of Turlock RWQCF (25.4 MGD) and the City of Modesto WQCF (27.3 MGD). For each scenario, the model estimated the distance downstream to achieve complete mix and the dilution available.

According to the report, initial mixing at the point of discharge is due to momentum and buoyancy; complete mixing is then achieved more slowly through dispersion as the narrow plume "hugs" the eastern bank of the canal. For human carcinogens, the results of the study indicate that the edge of the mixing zone where complete mixing occurs in the Delta-Mendota Canal is 2,554 meters (1.59 miles) at an effluent flow of 14.2 MGD and 1,994 meters (1.24 miles) at an effluent flow of 52.7 MGD.

For human carcinogen criteria, the SIP recommends using the harmonic mean receiving water flow and the long-term arithmetic mean effluent flow to calculate a dilution credit (SIP at section 1.4.2.1). Based on the harmonic mean flow of 2,153 cfs (1,392 MGD) of the Delta-Mendota Canal and effluent discharge flows of 14.2 MGD and 52.7 MGD, the applicable dilution credits are 97 and 25, respectively.

This Order requires the City of Turlock to conduct a mixing zone validation study after initiation of the discharge to the Delta-Mendota Canal. This Order may be reopened based on the results of the study.

iv. **Evaluation of Available Dilution for Human Carcinogen Criteria.** Section 1.4.2.2 of the SIP, provides that mixing zones should not be allowed at or near drinking water intakes. Furthermore, regarding the application of a mixing zone for protection of human health, the TSD states that, "...*the presence of mixing zones should not result in significant health risks, when evaluated using reasonable assumptions about exposure pathways. Thus, where drinking water contaminants are a concern, mixing zones should not encroach on drinking water intakes*." There are no drinking water intakes in the human carcinogen mixing zone. The human carcinogen criteria mixing zone meets the requirements of the SIP as follows:

(a) *Shall not compromise the integrity of the entire waterbody*-The TSD states that, "*If the total area affected by elevated concentrations within all mixing*

zones combined is small compared to the total area of a waterbody (such as a river segment), then mixing zones are likely to have little effect on the integrity of the waterbody as a whole, provided that the mixing zone does not impinge on unique or critical habitats." The human health mixing zone is not applicable to aquatic life criteria. The proposed human health mixing zone is approximately 1.59 miles long, constituting a small fraction of the total canal reach. The human health mixing zone does not compromise the integrity of the entire waterbody.

(b) *Shall not cause acutely toxic conditions to aquatic life passing through the mixing zone*–The human health mixing zone is not applicable to aquatic life criteria. Therefore, acutely toxic conditions will not occur in the mixing zone.

(c) *Shall not restrict the passage of aquatic life*–The human health mixing zone is not applicable to aquatic life criteria, and the narrow plume hugs the eastern bank of the Delta-Mendota Canal. Therefore, the mixing zone will not restrict the passage of aquatic life.

(d) *Shall not adversely impact biologically sensitive or critical habitats, including, but not limited to, habitat of species listed under federal or State endangered species laws*–The human health mixing zone is not applicable to aquatic life criteria. The mixing zone will not impact biologically sensitive or critical habitats.

(e) *Shall not produce undesirable or nuisance aquatic life; result in floating debris, oil, or scum; produce objectionable color, odor, taste, or turbidity; cause objectionable bottom deposits; cause nuisance*–The allowance of a human health mixing zone will not produce undesirable or nuisance aquatic life, result in floating debris, oil, or scum; produce objectionable color, odor, taste, or turbidity; cause objectionable bottom deposits; or cause nuisance. This Order requires end-of-pipe effluent limitations (e.g., for BOD_5 and TSS) and discharge prohibitions to prevent these conditions from occurring.

(f) *Shall not dominate the receiving water body or overlap a mixing zone from different outfalls*–The human health mixing zone is small relative to the water body, so it will not dominate the water body. Furthermore, the mixing zone does not overlap mixing zones as there are no other outfalls or mixing zones in the vicinity of the discharge.

(g) *Shall not be allowed at or near any drinking water intake*–There are no drinking water intakes within the human health mixing zone.

The human carcinogen mixing zone therefore complies with the SIP. The mixing zone also complies with the Basin Plan, which requires that the mixing zone not adversely impact beneficial uses. Beneficial uses will not be adversely affected for the same reasons discussed above. In determining the size of the mixing zone, the Central Valley Water Board considered the procedures and guidelines in the EPA's Water Quality Standards Handbook, 2d Edition (updated July 2007), Section 5.1, and Section 2.2.2 of the TSD. The SIP incorporates the same guidelines.

v. **Evaluation of Available Dilution for Specific Constituents (Pollutant-by-Pollutant Evaluation).** When determining to allow dilution credits for a specific pollutant, several factors must be considered, such as available assimilative capacity, facility performance, and best practicable treatment or control (BPTC). A pollutant-by-pollutant evaluation of dilution is discussed below:

(a) **Dichlorobromomethane.** The receiving water contains assimilative capacity for dichlorobromomethane and a human health mixing zone for dichlorobromomethane meets the mixing zone requirements of the SIP. Section 1.4.2.2 of the SIP requires that, "*A mixing zone shall be as small as practicable.*", and Section 1.4.2.2.B requires, "*The RWQCB shall deny or significantly limit a mixing zone and dilution credits as necessary to protect beneficial uses, meet the conditions of this Policy, or comply with other regulatory requirements*." The City of Modesto WQCF does not use chlorine for disinfection and thus is not expected to create or discharge disinfection by-products, such as dichlorobromomethane, to the Delta-Mendota Canal. Therefore, all of the assimilative capacity for dichlorobromomethane in the receiving water has been allocated to the City of Turlock RWQCF.

The maximum effluent concentration (MEC) for dichlorobromomethane from the City of Turlock RWQCF was 41.9 µg/L. As discussed in the Mixing Zone Study, a dilution ratio of 98:1 (dilution credit of 97), which corresponds to an effluent flow of 14.2 MGD, is necessary to achieve compliance with WQBEL's for dichlorobromomethane. Consequently, the City of Turlock has requested that the effluent flow in this Order be restricted to 14.2 MGD until it can be demonstrated that the City of Turlock RWQCF can comply with effluent limitations based on the buildout discharge volume or some other intermediate value. The City of Turlock RWQCF is currently treating an average flow of 10.3 MGD and flows are not expected to exceed 14.2 MGD during this permit term. Therefore, this Order limits the effluent flow to 14.2 MGD and includes effluent limitations for dichlorobromomethane calculated using a dilution credit of 97. The mixing zone for dichlorobromomethane is considered as small as practicable, and fully meets the requirements of the SIP.

(b) **Chlorodibromomethane.** The receiving water contains assimilative capacity for chlorodibromomethane and a human health mixing zone for this constituent meets the mixing zone requirements of the SIP. Section 1.4.2.2 of the SIP requires that, "*A mixing zone shall be as small as practicable*.", and Section 1.4.2.2.B requires, "*The RWQCB shall deny or significantly limit a mixing zone and dilution credits as necessary to protect beneficial uses, meet the conditions of this Policy, or comply with other regulatory requirements*." The City of Modesto WQCF does not use chlorine for disinfection and thus is not expected to create or discharge disinfection by-products, such as chlorodibromomethane, to the Delta-Mendota Canal. Therefore, all of the assimilative capacity for chlorodibromomethane in the receiving water has been allocated to the City of Turlock RWQCF. Based on a full buildout flow of 25.4 MGD for the City of Turlock the maximum dilution credit is 54 and based on the current design capacity flow of 14.2 MGD the maximum dilution credit is 97. However, as discussed in the Mixing Zone Study, a dilution credit of only 48, is necessary to achieve compliance with WQBEL's for

chlorodibromomethane. The complete antidegradation analysis submitted by the Discharger dated 20 October 2015[1] was based on existing Facility performance, therefore, a dilution credit of 48 has been allowed for chlorodibromomethane in this Order

(c) **Bis (2-ethylhexyl) Phthalate.** The receiving water contains assimilative capacity for bis (2-ethylhexyl) phthalate and a human health mixing zone for this constituent meets the mixing zone requirements of the SIP. Section 1.4.2.2 of the SIP requires that, "*A mixing zone shall be as small as practicable*.", and Section 1.4.2.2.B requires, "*The RWQCB shall deny or significantly limit a mixing zone and dilution credits as necessary to protect beneficial uses, meet the conditions of this Policy, or comply with other regulatory requirements*." Based on a full buildout flow of 52.7 MGD, the maximum dilution credit that could be allocated to the City of Turlock RWQCF for bis (2-ethylhexyl) phthalate is 25. However, as discussed in the Mixing Zone Study, a dilution credit of only 5 is necessary to achieve compliance with WQBEL's for bis (2-ethylhexyl) phthalate. Table F-6, below, shows effluent limits at Full Buildout Dilution, limits that use up to 10% assimilative capacity at Full Buildout and at the current permitted flow, and limits at City of Turlock RWQCF performance. Based on existing Facility performance, the City of Turlock RWQCF can meet more stringent WQBEL's for bis (2-ethylhexyl) phthalate. This represents a mixing zone that is as small as practicable for this Facility and that fully comply with the SIP.

Table F-6. Bis (2-ethylhexyl) phthalate Limitations Based on Full Dilution Credits Versus Facility Performance

Effluent Limitations for bis (2-ethylhexyl) phthalate			
	D	**Average Monthly**	**Maximum Daily**
Full Buildout Dilution	25	44	128
10% Assimilative Capacity at Buildout	4.5	9.3	27
10% Assimilative Capacity at Current Permitted Flow	8.5	16	47
City of Turlock RWQF Performance	5	10	30

Furthermore, the Central Valley Water Board finds that granting of the full dilution credits could allocate an unnecessarily large portion of the receiving water's assimilative capacity for these constituents and could violate the Antidegradation Policy. Although the Antidegradation Policy does not apply within a mixing zone, the allowance of a mixing zone allows an increase in the discharge of pollutants. Therefore, when a mixing zone and dilution credits are allowed, it is necessary to ensure the discharge complies with the Antidegradation Policy outside the mixing zone. The Antidegradation Policy requires that a discharge shall meet BPTC to minimize degradation, which in this case is, at minimum, existing

[1] Technical Memorandum prepared by Larry Walker Associates, "North Valley Regional Recycled Water Program, Addendum No. 1 to Antidegradation Analysis for Proposed Recycled Water Discharge to the Delta-Mendota Canal, Socioeconomic Impact Assessment of UV Disinfection Implementation at City of Turlock Regional Water Quality Control Facility", 20 October 2015

facility performance. Allowing the full dilution credit would allow the City of Turlock RWQCF to increase its loading of bis (2-ethylhexyl) phthalate to the Delta-Mendota Canal and reduce the treatment and control of the pollutant. Allowing the Discharger to reduce the level of treatment and/or control would not comply with the BPTC requirements of the Antidegradation Policy.

vi. **Regulatory Compliance for Dilution Credits and Mixing Zones.** To fully comply with all applicable laws, regulations and policies of the State, Central Valley Water Board approved a mixing zone and the associated dilution credits based on the following:

(a) Mixing zones are allowed under the SIP provided all elements contained in Section 1.4.2.2 are met. Based on the mixing zone study conducted by the Discharger the Central Valley Water Board has determined that these factors are met.

(b) Section 1.4.2.2.of the SIP requires mixing zones to be as small as practicable. Based on the mixing zone study conducted by the Discharger the Central Valley Water Board has determined the mixing zone is as small as practicable.

(c) In accordance with Section 1.4.2.2 of the SIP, the Board has determined the mixing zone is as small as practicable, will not compromise the integrity of the entire water body, restrict the passage of aquatic life, dominate the water body or overlap existing mixing zones from different outfalls. The mixing zone is small (approximately 1.59 miles downstream of the discharge) relative to the large size of the receiving water (approximately 116.5 miles), is not at or near a drinking water intake, and does not overlap a mixing zone from a different outfall.

(d) The Central Valley Water Board is allowing a mixing zone for human health constituents only and has determined allowing such mixing zone will not cause acutely toxic conditions to aquatic life passing through the mixing zone.

(e) The Central Valley Water Board has determined the discharge will not adversely impact biologically sensitive or critical habitats, including, but not limited to, habitat of species listed under the federal or State endangered species laws, because the mixing zone is for human health criteria only, is relatively small, and acutely toxic conditions will not occur in the mixing zone. The discharge will not produce undesirable or nuisance aquatic life, result in floating debris, oil, or scum, produce objectionable odor, taste, or turbidity, cause objectionable bottom deposits, or cause nuisance, because the Order establishes end-of-pipe effluent limitations (e.g., for BOD_5 and TSS) and discharge prohibitions to prevent these conditions from occurring.

(f) As required by the SIP, in determining the extent of or whether to allow a mixing zone and dilution credit, the Central Valley Water Board has considered the presence of pollutants in the discharge that are carcinogenic, mutagenic, teratogenic, persistent, bioaccumulative, or attractive to aquatic organisms, and concluded that the allowance of the mixing zone and dilution credit is adequately protective of the beneficial uses of the receiving water.

(g) The Central Valley Water Board has determined mixing zone complies with the SIP for priority pollutants.

(h) The mixing zone study indicates the maximum allowed dilution factor to be 97 for human health constituents. Section 1.4.2.2B of the SIP, in part states, *"The RWQCB shall deny or significantly limit a mixing zone and dilution credits as necessary to protect beneficial uses, meet the conditions of this Policy, or comply with other regulatory requirements."* Except for dichlorobromomethane, the Central Valley Water Board has determined a dilution factor of 97 is not needed or necessary for the Discharger to achieve compliance with this Order.

(i) The Central Valley Water Board has determined the mixing zone complies with the Basin Plan for non-priority pollutants. The Basin Plan requires a mixing zone not adversely impact beneficial uses. Beneficial uses will not be adversely affected for the same reasons discussed above. In determining the size of the mixing zone, the Central Valley Water Board has considered the procedures and guidelines in Section 5.1 of U.S. EPA's *Water Quality Standards Handbook*, 2nd Edition (updated July 2007) and Section 2.2.2 of the TSD. The SIP incorporates the same guidelines.

(j) The Central Valley Water Board has determined that allowing dilution factors that exceed those proposed by this Order would not comply with the State Anti-degradation Policy for receiving waters outside the allowable mixing zone for dichlorobromomethane, chlorodibromomethane, and bis (2-ethylhexyl) phthalate. The State Water Board established California's antidegradation policy in State Water Board Resolution No. 68-16. Resolution No. 68-16 incorporates the federal antidegradation policy and requires that existing quality of waters be maintained unless degradation is justified based on specific findings. Item 2 of Resolution 68-16 states:

"*Any activity which produces or may produce a waste or increased volume or concentration of waste and which dischargers or proposed to discharge to existing high quality waters will be required to meet waste discharge requirements which will result in the best practicable treatment or control of the discharge necessary to assure that (a) a pollution or nuisance will not occur and (b) the highest water quality consistent with maximum benefit to the people of the State will be maintained*."

The effluent limitations established in the Order for bis (2-ethylhexyl) phthalate and chlorodibromomethane that have been adjusted for dilution credits were developed based on performance of the City of Turlock RWQCF's current wastewater treatment capabilities. Therefore, the Central Valley Water Board determined the effluent limitations required by this Order will result in the Discharger implementing BPTC of the discharge necessary to assure that pollution or nuisance will not occur and the highest water quality consistent with maximum benefit to the people of the State will be maintained. The Central Valley Water Board also determined the Discharger will be in immediate compliance with the effluent limitations,

The Central Valley Water Board also determined establishing effluent limitations for bis (2-ethylhexyl) phthalate and chlorodibromomethane that

have been adjusted for dilution credits is consistent with Section 1.4.2.2B of the SIP that requires the Central Valley Water Board to shall deny or significantly limit a mixing zone and dilution credits as necessary to comply with other regulatory requirements.

Therefore, the Central Valley Water Board has determined the effluent limitations established in the Order for dichlorobromomethane, chlorodibromomethane, and bis (2-ethylhexyl) phthalate that have been adjusted for dilution credits are appropriate and necessary to comply with the Basin Plan, SIP, Federal anti-degradation regulations and Resolution 68-16.

d. **Conversion Factors.** The CTR contains aquatic life criteria for arsenic, cadmium, chromium III, chromium VI, copper, lead, nickel, silver, and zinc which are presented in dissolved concentrations. U.S. EPA recommends conversion factors to translate dissolved concentrations to total concentrations. The default U.S. EPA conversion factors contained in Appendix 3 of the SIP were used to convert the applicable dissolved criteria to total recoverable criteria.

e. **Hardness-Dependent CTR Metals Criteria.** The CTR and the NTR contain water quality criteria for seven metals that vary as a function of hardness. The lower the hardness the lower the water quality criteria. The metals with hardness-dependent criteria include cadmium, copper, chromium III, lead, nickel, silver, and zinc.

This Order has established the criteria for hardness-dependent metals based on the hardness of the receiving water (actual ambient hardness) as required by the SIP[1] and the CTR[2]. The SIP and the CTR require the use of “receiving water” or “actual ambient” hardness, respectively, to determine effluent limitations for these metals. The CTR requires that the hardness values used shall be consistent with the design discharge conditions for design flows and mixing zones[3]. Where design flows for aquatic life criteria include the lowest one-day flow with an average reoccurrence frequency of once in ten years (1Q10) and the lowest average seven consecutive day flow with an average reoccurrence frequency of once in ten years (7Q10). [4] This section of the CTR also indicates that the design conditions should be established such that the appropriate criteria are not exceeded more than once in a three year period on average.[5] The CTR requires that when mixing zones are allowed the CTR criteria apply at the edge of the mixing zone, otherwise the criteria apply throughout the water body including at the point of discharge. [6] The CTR does not define the term “ambient,” as applied in the regulations. Therefore, the Central Valley Water Board has considerable discretion to consider upstream and downstream ambient conditions when establishing the appropriate water quality criteria that fully complies with the CTR and SIP.

[1] The SIP does not address how to determine the hardness for application to the equations for the protection of aquatic life when using hardness-dependent metals criteria. It simply states, in Section 1.2, that the criteria shall be properly adjusted for hardness using the hardness of the receiving water.
[2] The CTR requires that, for waters with a hardness of 400 mg/L (as $CaCO_3$), or less, the actual ambient hardness of the surface water must be used (40 C.F.R. § 131.38(c)(4)).
[3] 40 C.F.R. §131.3(c)(4)(ii)
[4] 40 C.F.R. §131.38(c)(2)(iii) Table 4
[5] 40 C.F.R. §131.38(c)(2)(iii) Table 4, notes 1 and 2
[6] 40 C.F.R. §131.38(c)(2)(i)

Summary Findings

The ambient hardness for the Delta-Mendota Canal is represented by the data in Figure F-1, below, which shows ambient hardness ranging from 41 mg/L to 223 mg/L based on ambient data collected from January 2005 through June 2015. Given the high variability in ambient hardness values, there is no single hardness value that describes the ambient receiving water for all possible scenarios (e.g., minimum, maximum). Because of this variability, staff has determined that based on the ambient hardness concentrations measured in the receiving water, the Central Valley Water Board has discretion to select ambient hardness values within the range of 41 mg/L (minimum) up to 223 mg/L (maximum). Staff recommends that the Board use these ambient hardness values shown in Table F-7 for the following reasons.

i. Using these ambient receiving water hardness values shown in Table F-7 will result in criteria and effluent limitations that ensure protection of beneficial uses under all ambient receiving water conditions.

ii. The Water Code mandates that the Central Valley Water Board establish permit terms that will ensure the reasonable protection of beneficial uses. In this case, using the lowest measured ambient hardness to calculate effluent limitations is not required to protect beneficial uses. Calculating effluent limitations based on the lowest measured ambient hardness is not required by the CTR or SIP, and is not reasonable as it would result in overly conservative limits that will impart substantial costs to the Discharger and ratepayers without providing any additional protection of beneficial uses. In compliance with applicable state and federal regulatory requirements, after considering the entire range of ambient hardness values, Board staff has used the ambient hardness values shown in Table F-7 to calculate the proposed effluent limitations for hardness-dependent metals. The proposed effluent limitations are protective of beneficial uses under all flow conditions.

iii. Using an ambient hardness that is higher than the minimum of 41 mg/L will result in a limit that may allow increased metals to be discharged to the Delta-Mendota Canal, but such discharge is allowed under the antidegradation policy (State Water Board Resolution 68-16). The Board finds that this degradation is consistent with the antidegradation policy (see antidegradation findings in Section IV.D.4 of this Fact Sheet). The antidegradation policy requires the Discharger to meet waste discharge requirements which will result in the BPTC of the discharge necessary to assure that: a) a pollution or nuisance will not occur, and b) the highest water quality consistent with maximum benefit to the people of the State will be maintained.

iv. Using the ambient hardness values shown in Table F-7 is fully consistent with the CTR and SIP's requirements for developing metals criteria.

Table F-7. Summary of CTR Criteria for Hardness-dependent Metals

CTR Metals	Ambient Hardness (mg/L)[2,3]	CTR Criteria (µg/L, total recoverable)[1]	
		acute	chronic
Copper	92	13	8.7
Chromium III	92	1,600	190
Cadmium	90 (acute) 92 (chronic)	4.0	2.3
Lead	87	68	2.7
Nickel	92	440	49

CTR Metals	Ambient Hardness (mg/L)[2,3]	CTR Criteria (µg/L, total recoverable)[1]	
		acute	chronic
Silver	80	2.8	--
Zinc	92	110	110

[1] Metal criteria rounded to two significant figures in accordance with the CTR (40 C.F.R. §131.38(b)(2)).
[2] The ambient hardness values in this table represent actual observed receiving water hardness measurements from the dataset shown in Figure F-1.
[3] The CTR's hardness dependent metals criteria equations vary depending on the metal, which results in difference in the range of ambient hardness values that may be used to develop effluent limitations that are protective of beneficial uses and comply with CTR criteria for all ambient flow conditions.

Background

The State Water Board provided direction regarding the selection of hardness in two precedential water quality orders; WQO 2009-0008 for the City of Davis Wastewater Treatment Plant (Davis Order) and WQO 2004-0013 for the Yuba City Wastewater Treatment Plant (Yuba City Order). The State Water Board recognized that the SIP and the CTR do not discuss the manner in which hardness is to be ascertained, thus regional water boards have considerable discretion in determining ambient hardness so long as the selected value is protective of water quality criteria under the given flow conditions (Davis Order, p.10). The State Water Board explained that it is necessary that, "*The [hardness] value selected should provide protection for all times of discharge under varying hardness conditions*." (Yuba City Order, p. 8). The Davis Order also provides that, "*Regardless of the hardness used, the resulting limits must always be protective of water quality criteria under all flow conditions*." (Davis Order, p. 11).

The equation describing the total recoverable regulatory criterion, as established in the CTR, is as follows:

$$\text{CTR Criterion} = \text{WER} \times (e^{m[\ln(H)]+b}) \quad \text{(Equation 1)}$$

Where:

H = ambient hardness (as $CaCO_3$)[1]

WER = water-effect ratio

m, b = metal- and criterion-specific constants

The direction in the CTR regarding hardness selection is that it must be based on ambient hardness and consistent with design discharge conditions for design flows and mixing zones. Consistent with design discharge conditions and design flows means that the selected "design" hardness must result in effluent limitations under design discharge conditions that do not result in more than one exceedance of the applicable criteria in a three year period.[2] Where design flows for aquatic life criteria include the lowest one-day flow with an average reoccurrence frequency of once in ten years (1Q10) and the lowest average seven consecutive day flow with an

[1] For this discussion, all hardness values are expressed in mg/L as $CaCO_3$.
[2] 40 C.F.R. section 131.38(c)(2)(iii) Table 4, notes 1 and 2

average reoccurrence frequency of once in ten years (7Q10). The 1Q10 and 7Q10 Delta-Mendota Canal flows are 49 MGD and 257 MGD, respectively.

Ambient Conditions

The ambient receiving water hardness varied from 41 mg/L to 223 mg/L based on 126 samples collected between January 2005 and June 2015 (see Figure F-1).

Figure F-1. Observed Downstream Receiving Water Hardness Concentrations for January 2005 - June 2015[1]

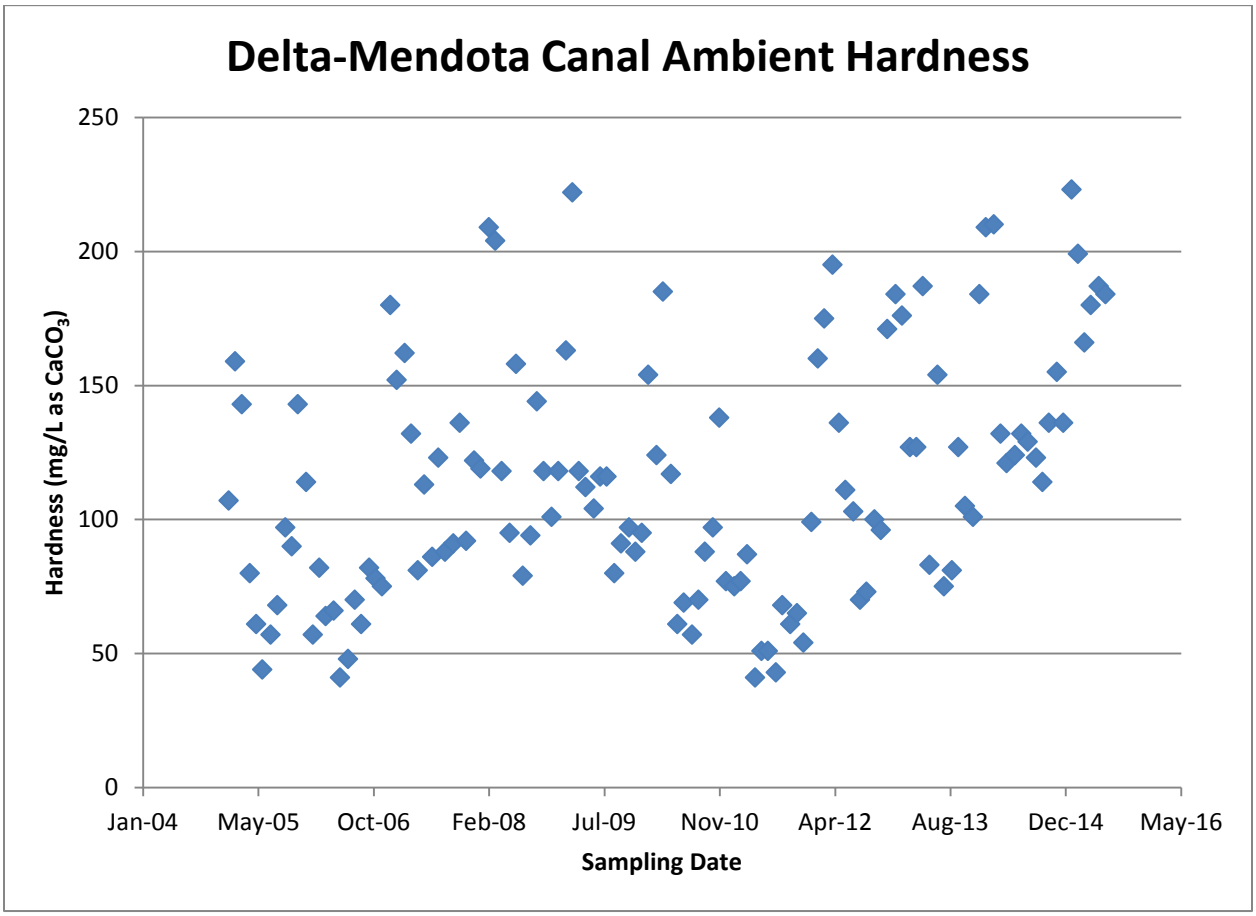

In this analysis, the entire range of ambient hardness concentrations shown in Figure F-1 were considered to determine the appropriate ambient hardness to calculate the CTR criteria and effluent limitations that are protective under all discharge conditions.

Approach to derivation of criteria

As shown above, ambient hardness varies substantially. Because of the variation, there is no single hardness value that describes the ambient receiving water for all possible scenarios (e.g., minimum, maximum, mid-point). While the hardness selected must be hardness of the ambient receiving water, selection of an ambient receiving water hardness that is too high would result in effluent limitations that do not protect beneficial uses. Also, the use of minimum ambient hardness would result

[1] DMC at McCabe Rd, USBR.

in criteria that are protective of beneficial uses, but such criteria may not be representative considering the wide range of ambient conditions.

Reasonable worse-case ambient conditions. To determine whether a selected ambient hardness value results in effluent limitations that are fully protective while complying with federal regulations and state policy, staff have conducted an analysis considering varying ambient hardness and flow conditions. To do this, the Central Valley Water Board has ensured that the receiving water hardness and criteria selected for effluent limitations are protective under "reasonable-worst case ambient conditions." These conditions represent the receiving water conditions under which derived effluent limitations would ensure protection of beneficial uses under all ambient flow and hardness conditions.

Reasonable worse-case ambient conditions:

- "Low receiving water flow." CTR design discharge conditions (1Q10 and 7Q10) have been selected to represent reasonable worse case receiving water flow conditions.
- "High receiving water flow (maximum receiving water flow)." This additional flow condition has been selected consistent with the Davis Order, which required that the hardness selected be protective of the water quality criteria under all flow conditions.
- "Low receiving water hardness." The minimum upstream receiving water hardness condition of 41 mg/L was selected to represent the reasonable worse-case receiving water hardness.
- "Background ambient metal concentration at criteria." This condition assumes that the metal concentration in the upstream receiving water is equal to the CTR criteria (upstream of the discharge). Based on data in the record, this is a design condition that has not occurred in the receiving water and is used in this analysis to ensure that limits are protective of beneficial uses even in the situation where there is no assimilative capacity.

Iterative approach. An iterative analysis has been used to select the ambient hardness to calculate the criteria that will result in effluent limitations that protect beneficial uses under all flow conditions.

The iterative approach is summarized in the following algorithm and described below in more detail.

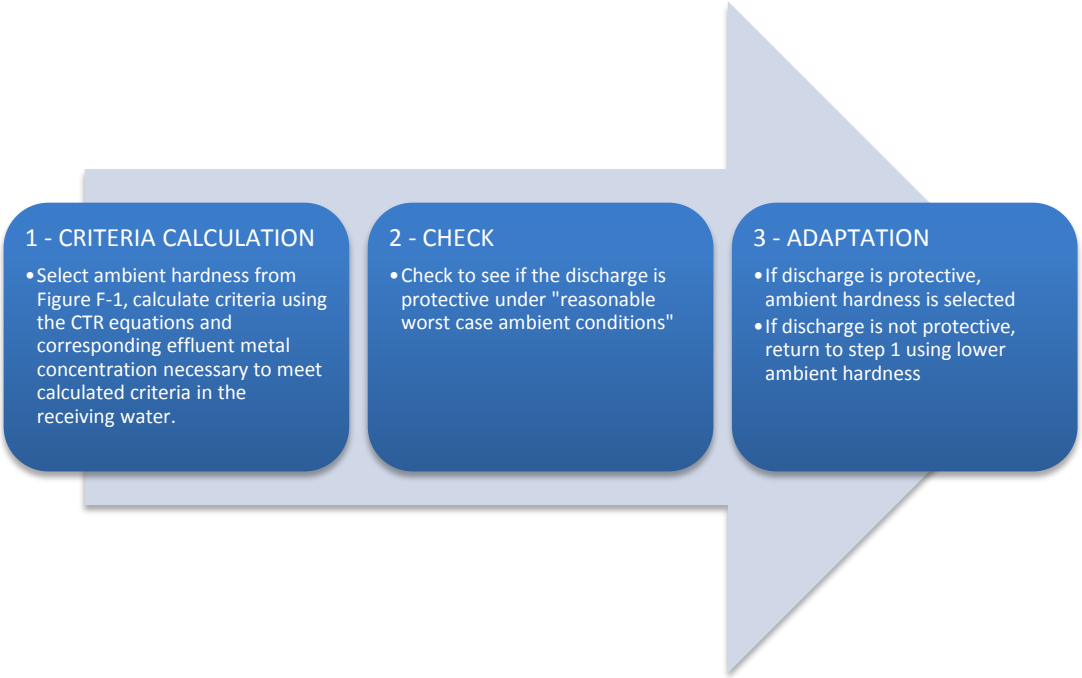

i. CRITERIA CALCULATION. CTR criteria are calculated using the CTR equations based on actual measured ambient hardness sample results, starting with the maximum observed ambient hardness of 223 mg/L. Effluent metal concentrations necessary to meet the above calculated CTR criteria in the receiving water are calculated in accordance with the SIP.[1] This should not be confused with an effluent limit. Rather, it is the Effluent Concentration Allowance (ECA), which is synonymous with the wasteload allocation defined by USEPA as "*a definition of effluent water quality that is necessary to meet the water quality standards in the receiving water*."[2] If effluent limits are found to be needed, the limits are calculated to enforce the ECA considering effluent variability and the probability basis of the limit.

ii. CHECK. Using U.S. EPA's simple mass balance equation[3], is used to evaluate if discharge at the computed ECA is protective. Resultant downstream metal concentration is then compared with downstream calculated CTR criteria under reasonable worst-case ambient conditions.

iii. ADAPT. If Step 2 results in:

(a) Receiving water metal concentration that complies with CTR criteria under reasonable worse-case ambient conditions, then the hardness value is selected.

(b) Receiving water metal concentration greater than CTR criteria, then return to bullet 1, selecting a lower ambient hardness value.

The CTR's hardness dependent metals criteria equations contain metal-specific constants, so the criteria vary depending on the metal. Therefore, Steps 1 through 3 must be repeated separately for each metal until ambient hardness values are

[1] SIP Section 1.4.B, Step 2, provides direction for calculating the Effluent Concentration Allowance.
[2] U.S. EPA Technical Support Document for Water Quality-based Toxics Control (TSD), pg. 96.
[3] U.S. EPA NPDES Permit Writers' Handbook (EPA 833-K-10-001, September 2010, pg. 6-24)

determined that will result in criteria and effluent limitations that comply with the CTR and protect beneficial uses for all metals.

Results of iterative analysis

The above iterative analysis for each CTR hardness-dependent metal results in the selected ambient hardness values shown in Table F-7, above. Using these hardness values to calculate criteria, which are actual sample results collected in the receiving water, will result in effluent limitations that are protective under all ambient flow conditions. Copper and lead are used as examples below to illustrate the results of the analysis. Tables F-8 and F-9 below summarize the numeric results of the three step iterative approach for copper and lead. As shown in the example tables, ambient hardness values of 92 mg/L (for copper) and 87 mg/L (for lead) are used in the CTR equations to derive criteria and effluent limitations. Then under the "check" step, worse-case ambient receiving water conditions are used to test whether discharge at the computed effluent limitations results in compliance with CTR criteria and protection of beneficial uses.

The results of the above analysis, summarized in the tables below, show that the ambient hardness values selected using the three-step iterative process results in protective effluent limitations that achieve CTR criteria under all flow conditions. Tables F-8 and F-9 below, summarize the critical low flow conditions. However, the analysis evaluated all flow conditions to ensure compliance with the CTR criteria at all times.

Table F-8. Verification of CTR Compliance for Copper

Receiving water hardness used to compute effluent limitations				92 mg/L (as $CaCO_3$)
Effluent Concentration Allowance (ECA) for Copper[2]				8.7 mg/L (as $CaCO_3$)
	Downstream Ambient Concentrations Under Worst-Case Ambient Receiving Water Conditions			**Complies with CTR Criteria**
	Hardness (mg/L)	**CTR Criteria (µg/L)**	**Ambient Copper Concentration**[1] **(µg/L)**	
1Q10	60	6.1	6.0	**Yes**
7Q10	46	4.8	4.8	**Yes**
Max receiving water flow	41	4.4	4.4	**Yes**

1 This concentration is derived using worst-case ambient conditions. These conservative assumptions will ensure that the receiving water always complies with CTR criteria.

2 The ECA defines effluent quality necessary to meet the CTR criteria in the receiving water. There is no effluent limitation for copper as it demonstrates no reasonable potential.

Table F-9. Verification of CTR Compliance for Lead

Receiving water hardness used to compute effluent limitations				87 mg/L (as $CaCO_3$)
Effluent Concentration Allowance for Lead[2]				2.7 mg/L (as $CaCO_3$)
	Downstream Ambient Concentration Under Worst-Case Ambient Receiving Water Conditions			**Complies with CTR Criteria**
	Hardness (mg/L)	**CTR Criteria (µg/L)**	**Ambient Lead Concentration**[1] **(µg/L)**	
1Q10	60	1.7	1.6	**Yes**
7Q10	46	1.2	1.2	**Yes**
Max receiving water flow	41	1.0	1.0	**Yes**

[1] This concentration is derived using worst-case ambient conditions. These conservative assumptions will ensure that the receiving water always complies with CTR criteria.
[2] The ECA defines effluent quality necessary to meet the CTR criteria in the receiving water. There is no effluent limitation for lead as it demonstrates no reasonable potential.

3. Determining the Need for WQBEL's

a. **Constituents with No Reasonable Potential**. WQBEL's are not included in this Order for constituents that do not demonstrate reasonable potential (i.e. constituents were not detected in the effluent or receiving water); however, monitoring for those pollutants is established in this Order as required by the SIP. If the results of effluent monitoring demonstrate reasonable potential, this Order may be reopened and modified by adding an appropriate effluent limitation.

Most constituents with no reasonable potential are not discussed in this Order. However, the following constituent(s) were found to have no reasonable potential after assessment of the data:

i. **Selenium**

(a) **WQO.** Selenium is a highly bioaccumulative trace element which, under certain conditions, can be mobilized through the food chain and cause both acute and chronic toxicity to fish and wildlife. The Basin Plan includes a criterion of 2.0 µg/L as a monthly mean for selenium for background sources to the Grassland Watershed wetland supply channels such as deliveries from the Delta-Mendota Canal and the Mendota Pool. The CTR includes acute (1-hour average) and chronic (4-day average) criteria for protection of freshwater aquatic life of 20 µg/L and 5 µg/L, respectively.

(b) **RPA Results.**

The maximum ambient background concentration for selenium in the Delta-Mendota Canal was an estimated concentration of 0.72 µg/L, based on 2 samples collected by the Discharger in October 2014.

City of Turlock RWQCF: Selenium was detected but not quantified in the effluent at an estimated concentration of 0.43 µg/L based on 35 samples collected between July 2012 and June 2015. Therefore, selenium in the discharge does not have reasonable potential to cause or contribute to an exceedance of the Basin Plan's numeric objective in the receiving water. However, due to the TMDL for selenium in the Grasslands Watershed, which the Delta-Mendota Canal is tributary, monthly effluent monitoring for selenium is required.

City of Modesto WQCF Selenium was detected but not quantified in the effluent at an estimated concentration of 0.89 µg/L based on 2 samples collected between August 2014 and October 2014. Therefore, selenium in the discharge does not have reasonable potential to cause or contribute to an exceedance of the Basin Plan's numeric objective in the receiving water. However, due to the TMDL for selenium in the Grasslands Watershed, which the Delta-Mendota Canal is tributary, monthly effluent monitoring for selenium required.

b. **Constituents with Reasonable Potential.** The Central Valley Water Board finds that the discharge from the City of Turlock RWQCF has a reasonable potential to cause or contribute to an in-stream excursion above a water quality standard for aluminum, ammonia, bis (2-ethylhexyl) phthalate, BOD_5, chlorine residual, chlorodibromomethane, diazinon and chlorpyrifos, dichlorobromomethane, nitrate plus nitrite, pathogens, pH, salinity, and TSS. The Central Valley Water Board finds that the discharge from the City of Modesto WQCF has a reasonable potential to cause or contribute to an in-stream excursion above a water quality standard for ammonia, BOD_5, diazinon and chlorpyrifos, nitrate plus nitrite, pathogens, pH, salinity, and TSS. WQBEL's for these constituents are included in this Order. Summaries of the RPA's are provided in Attachment G, and a detailed discussion of the RPA for each constituent is provided below.

i. **Aluminum**

Aluminum is the third most abundant element in the earth's crust and is ubiquitous in both soils and aquatic sediments. When mobilized in surface waters, aluminum has been shown to be toxic to various fish species. However, the potential for aluminum toxicity in surface waters is directly related to the chemical form of aluminum present, and the chemical form is highly dependent on water quality characteristics that ultimately determine the mechanism of aluminum toxicity. Surface water characteristics, including pH, temperature, colloidal material, fluoride and sulfate concentrations, and total organic carbon, all influence aluminum speciation and its subsequent bioavailability to aquatic life. Calcium [hardness] concentrations in surface water may also reduce aluminum toxicity by competing with monomeric aluminum (Al^{3+}) binding to negatively charged fish gills.

(a) **WQO.** The State Water Board's Division of Drinking Water (DDW; formerly the Department of Public Health) has established Secondary Maximum Contaminant Levels (MCL's) to assist public drinking water systems in managing their drinking water for aesthetic conditions such as taste, color, and odor. The Secondary MCL for aluminum is 200 µg/L for protection of the MUN beneficial use. Title 22 requires compliance with Secondary MCL's on an annual average basis.

The Code of Federal Regulations promulgated criteria for priority toxic pollutants for California's surface waters as part of section 131.38 Establishment of Numeric Criteria for Priority Toxic Pollutants for the State of California (California Toxics Rule or CTR), including metals criteria. However, aluminum criteria were not promulgated as part of the CTR. Absent numeric aquatic life criteria for aluminum, WQBEL's in the Central Valley Region's NPDES permits are based on the Basin Plans' narrative toxicity objective. The Basin Plans' *Policy for Application of Water Quality Objectives* requires the Central Valley Water Board to consider, "*on a*

case-by-case basis, direct evidence of beneficial use impacts, all material and relevant information submitted by the discharger and other interested parties, and relevant numerical criteria and guidelines developed and/or published by other agencies and organizations. In considering such criteria, the Board evaluates whether the specific numerical criteria which are available through these sources and through other information supplied to the Board, are relevant and appropriate to the situation at hand and, therefore, should be used in determining compliance with the narrative objective." Relevant information includes, but is not limited to (1) U.S. EPA Ambient Water Quality Criteria (NAWQC) and subsequent Correction, (2) site-specific conditions of the Delta-Mendota Canal, the receiving water, and (3) site-specific aluminum studies conducted by dischargers within the Central Valley Region. (Basin Plan, p. IV.-17.00; see also, 40 CFR 122.44(d)(vi).)

U.S. EPA NAWQC. U.S. EPA recommended the NAWQC aluminum acute criterion at 750 µg/L based on test waters with a pH of 6.5 to 9.0. U.S. EPA also recommended the NAWQC aluminum chronic criterion at 87 µg/L based upon the following two toxicity tests. All test waters contained hardness at 12 mg/L as $CaCO_3$.

(1) Acute toxicity tests at various aluminum doses were conducted in various acidic waters (pH 6.0 – 6.5) on 159- and 160-day old striped bass. The 159-day old striped bass showed no mortality in waters with pH at 6.5 and an aluminum dose at 390 µg/L, and the 160-day old striped bass showed 58% mortality at a dose of 174.4 µg/L in same pH waters. However, the 160-day old striped bass showed 98% mortality at an aluminum dose of 87.2 µg/L in waters with pH at 6.0, which is U.S. EPA's basis for the 87 µg/L chronic criterion. The varied results draw into question this study and the applicability of the NAWQC chronic criterion of 87 µg/L.

(2) Chronic toxicity effects on 60-day old brook trout were evaluated in circumneutral pH waters (6.5-6.9 pH) in five cells at various aluminum doses (4, 57, 88, 169, and 350 µg/L). Chronic evaluation started upon hatching of eyed eggs of brook trout, and their weight and length were measure after 45 days and 60 days. The 60-day old brook trout showed 24% weight loss at 169 µg/L of aluminum and 4% weight loss at 88 µg/L of aluminum, which is the basis for U.S. EPA's chronic criteria. Though this test study shows chronic toxic effects of 4% reduction in weight after exposure for 60-days, the chronic criterion is based on 4-day exposure; so again, the applicability of the NAWQC chronic criterion of 87 µg/L is questionable.

Site-specific Conditions. U.S. EPA advises that a water effects ratio (WER) may be more appropriate to better reflect the actual toxicity of aluminum to aquatic organisms when the pH and hardness conditions of the receiving water are not similar to that of the test conditions.[1] Effluent

[1] "*The value of 87 micro-g/L is based on a toxicity test with striped bass in water with pH = 6.5-6.6 and hardness < 10 mg/L. Data in [a 1994 Study] indicate that aluminum is substantially less toxic at higher pH and hardness, but the effects of pH and hardness are not well quantified at this time.*" U.S. EPA 1999 NAWQC Correction, Footnote L

and Delta-Mendota Canal monitoring data indicate that the pH and hardness values are not similar to the low pH and hardness conditions under which the chronic criterion for aluminum was developed, as shown in the table below, and therefore, the Central Valley Water Board does not expect aluminum to be as toxic in the Delta-Mendota Canal as in the previously described toxicity tests. The pH of the Delta-Mendota Canal, the receiving water, ranged from 6.23 to 8.45 with a median of 7.33 based on 57 monitoring results obtained between January 2010 and August 2014. These water conditions typically are circumneutral pH where aluminum is predominately in the form of $Al(OH)_3$ and non-toxic to aquatic life. The hardness of the Delta-Mendota Canal ranged from 41 mg/L to 223 mg/L based 126 samples collected from January 2005 through June 2015, which is above the conditions, and thus less toxic, than the tests used to develop the chronic criterion.

Parameter	Units	Test Conditions for Applicability of Chronic Criterion	Effluent	Receiving Water
pH	standard units	6.0 – 6.5	City of Modesto WQCF: 3.96 – 7.35 City of Turlock RWQCF: 6.4 – 9.9	6.23 – 8.45
Hardness, Total (as $CaCO_3$)	mg/L	12	City of Modesto WQCF: 160 – 165 City of Turlock RWQCF: 93 – 129	41 – 223
Aluminum, Total Recoverable	µg/L	87.2 - 390	City of Modesto WQCF: 21 – 29 City of Turlock RWQCF: 38 – 607	68 – 130

Local Environmental Conditions and Studies. Twenty-one site-specific aluminum toxicity tests have been conducted within the Central Valley Region. The pH and hardness of Delta-Mendota Canal are similar, as shown in the table below, and thus the results of these site-specific aluminum toxicity tests are relevant and appropriate for Delta-Mendota Canal. As shown in the following table, all EC_{50}[1] toxicity study result values are at concentrations of aluminum above 5,000 µg/L. Thus, the toxic effects of aluminum in these surface waters and in Delta-Mendota Canal, is less toxic (or less reactive) to aquatic species then demonstrated in the toxicity tests that U.S. EPA used for the basis of establishing the chronic criterion of 87 µg/L. This new information, and review of the toxicity tests U.S. EPA used to establish the chronic criterion, indicates that 87 µg/L is overly stringent and not applicable to Delta-Mendota Canal.

[1] The effect concentration is a point estimate of the toxicant concentration that would cause an observable adverse effect (e.g. death, immobilization, or serious incapitation) in a given percent of the test organisms, calculated from a continuous model (e.g. Probit Model). EC_{50} is a point estimate of the toxicant concentration that would cause an observable adverse effect in 50 percent of the test organisms. The EC_{50} is used in toxicity testing to determine the appropriate chronic criterion.

Central Valley Region Site-Specific Aluminum Toxicity Data

Discharger	Test Waters	Hardness Value	Total Aluminum EC_{50} Value	pH	WER
***Oncorhynchus mykiss* (rainbow trout)**					
Manteca	Surface Water/Effluent	124	>8600	9.14	N/C
Auburn	Surface Water	16	>16500	7.44	N/C
Modesto	Surface Water/Effluent	120/156	>34250	8.96	>229
Yuba City	Surface Water/Effluent	114/164[1]	>8000	7.60/7.46	>53.5
***Ceriodaphnia dubia* (water flea)**					
Auburn	Effluent	99	>5270	7.44	>19.3
	Surface Water	16	>5160	7.44	>12.4
Manteca	Surface Water/Effluent	124	>8800	9.14	N/C
	Effluent	117	>8700	7.21	>27.8
	Surface Water	57	7823	7.58	25.0
	Effluent	139	>9500	7.97	>21.2
	Surface Water	104	>11000	8.28	>24.5
	Effluent	128	>9700	7.78	>25.0
	Surface Water	85	>9450	7.85	>25.7
	Effluent	106	>11900	7.66	>15.3
	Surface Water	146	>10650	7.81	>13.7
Modesto	Surface Water/Effluent	120/156	31604	8.96	211
Yuba City	Surface Water/Effluent	114/164[1]	>8000	7.60/7.46	>53.5
Placer County (SMD 1)	Effluent	150	>5000	7.4 – 8.7	>13.7
***Daphnia magna* (water flea)**					
Manteca	Surface Water/Effluent	124	>8350	9.14	N/C
Modesto	Surface Water/Effluent	120/156	>11900	8.96	>79.6
Yuba City	Surface Water/Effluent	114/164[1]	>8000	7.60/7.46	>53.5

The Discharger's have not conducted a toxicity test for aluminum in the Delta-Mendota Canal. However, in April 2005, the City of Modesto completed a *Phase I Water-Effects Ratio Study* for aluminum, and on 11 November 2005, submitted the results in its *Aluminum Water-Effect Ratio Study Plan* for its discharge to the San Joaquin River. The Phase I WER study consisted of range-finding toxicity tests, in which the NOEC, LOEC, and EC_{50}[1] were determined for the species *Daphnia magna*, *Ceriodaphnia dubia*, and *Rainbow Trout*. For this initial range-finding test, side-by-side testing with laboratory water was not conducted. However, to obtain an estimate of the potential WER for the effluent from the City of Modesto WQCF, the EC_{50} values determined for the site water were divided by the Species Mean Acute Value (SMAV) available in the aluminum criteria document according to U.S. EPA's streamlined WER procedure[2]. According to the U.S. EPA streamlined procedure, two WER's are determined by dividing site water WER's with both the laboratory dilution water EC_{50} and the SMAV; the final WER of the sample

[1] The NOEC is the "no observed effect concentration", the LOEC is the "lowest observed effect concentration", and the EC_{50} is the concentration that caused an effect at 50% of the test organisms.
[2] U.S. EPA. March 2001. Streamlined Water-Effect Ratio Procedure for Discharges of Copper. Office of Water. EPA-822-R-01-005.

is the lesser of the two. The estimated WER's calculated using the SMAVs are presented in the table below:

Species	Site Water EC_{50} for Total Al (µg/L)	SMAV (µg/L Al)	WER
Daphnia magna	31,604	38.2	827
Ceriodaphnia dubia	>11,900[1]	1.9	6,263
Rainbow Trout	>34,250[1]	10.39	3,296

[1] The 2001 U.S. EPA streamlined procedures states that a "greater than" value for the EC_{50} in the site water is interpreted as "equal to" in calculating the WER.

The Modesto Phase I WER study is not sufficient to calculate a WER, however, the preliminary results confirm the conditions of San Joaquin River are not similar to the U.S. EPA study conditions for the development of the U.S. EPA recommended chronic criterion.

Additionally, the City of Manteca conducted toxicity tests in the San Joaquin River. The City of Manteca aluminum toxicity study resulted in a minimum site-specific aluminum objective of 7,823 µg/L.

As shown in the table above, the test water quality characteristics of the San Joaquin River near Modesto and Manteca are similar for pH and hardness in the Delta-Mendota Canal. Thus, results of the site-specific studies conducted on the San Joaquin River near Modesto and Manteca are representative of Delta-Mendota Canal near the proposed discharge. Therefore, the City of Modesto and City of Manteca aluminum toxicity test studies are relevant for use in determining the specific numerical criteria to be used in determining compliance with the Basin Plan's narrative toxicity objective for the discharge to the Delta-Mendota Canal. Thus, these results support the conclusion that the 87 µg/L chronic criterion is overly stringent for Delta-Mendota Canal near the discharge.

Applicable WQOs. This Order implements the Secondary MCL of 200 µg/L as an annual average for the protection of MUN and implements the Basin Plan's narrative toxicity objective for the protection of aquatic life using an acute (1-hour) criterion and chronic (4-day) criterion of 750 µg/L based on U.S. EPA's NAWQC and the discussion above.

(b) **RPA Results.** For priority pollutants, the SIP dictates the procedures for conducting the RPA. Aluminum is not a priority pollutant. Therefore, the Central Valley Water Board is not restricted to one particular RPA method. Due to the site-specific conditions of the discharge, the Central Valley Water Board has used its judgment in determining the appropriate method for conducting the RPA for this non-priority pollutant constituent. The most stringent objective is the Secondary MCL, which is derived from human welfare considerations (e.g., taste, odor, laundry staining), not for toxicity. Secondary MCL's are drinking water standards contained in Title 22 of the California Code of Regulations. Title 22 requires compliance with these standards on an annual average basis, when sampling at least quarterly. To be consistent with how compliance with the standards is determined the RPA was conducted based on the calendar year annual average effluent aluminum concentrations.

City of Turlock RWQCF: For the City of Turlock RWQCF, the maximum observed effluent annual average aluminum concentration was 311 µg/L based on 52 samples collected between July 2012 and June 2015, which exceeds the Secondary MCL. The maximum observed effluent aluminum concentration was 607 µg/L, which does not exceed the NAWQC acute criterion of 750 µg/L. Therefore, the discharge from the City of Turlock RWQCF exhibits reasonable potential to cause or contribute to an exceedance of the Secondary MCL for aluminum.

City of Modesto WQCF: For the City of Modesto WQCF, the maximum observed effluent annual average aluminum concentration was 25 µg/L based on two samples collected in August 2014 and October 2014, which does not exceed the Secondary MCL. The maximum observed effluent aluminum concentration was 29 µg/L, which does not exceed the NAWQC acute criterion of 750 µg/L. Therefore, the discharge from the City of Modesto WQCF does not exhibit reasonable potential to cause or contribute to an exceedance of the Secondary MCL or NAWQC acute criterion for aluminum.

(c) **WQBEL's**

City of Turlock RWQCF: This Order contains a final average weekly effluent limitation (AWEL) and average monthly effluent limitation (AMEL) for aluminum of 708 µg/L and 329 µg/L, respectively, based on the Secondary MCL for the discharge from the City of Turlock RWQCF.

City of Modesto WQCF: This Order does not include effluent limitations for aluminum for the City of Modesto WQCF.

(d) **Plant Performance and Attainability**

City of Turlock RWQCF: Although effluent aluminum concentrations from the City of Turlock RWQCF occasionally exceed the AWEL and AMEL, the City of Turlock indicated in the Mixing Zone Study that they expect to comply with the aluminum effluent limitations through management of chemicals necessary for pre-filtration. The Central Valley Water Board concludes, therefore, that immediate compliance with these effluent limitations is feasible.

City of Modesto WQCF: This Order does not include effluent limitations for aluminum for the City of Modesto WQCF.

ii. **Ammonia**

(a) **WQO.** The 1999 NAWQC for the protection of freshwater aquatic life for total ammonia (the "1999 Criteria"), recommends acute (1-hour average; criteria maximum concentration or CMC) standards based on pH and chronic (30-day average; criteria continuous concentration or CCC) standards based on pH and temperature. U.S. EPA also recommends that no 4-day average concentration should exceed 2.5 times the 30-day CCC. U.S. EPA found that as pH increased, both the acute and chronic toxicity of ammonia increased. Salmonids were more sensitive to acute toxicity effects than other species. However, while the acute toxicity of ammonia was not influenced by temperature, it was found that invertebrates and young fish experienced increasing chronic toxicity effects with increasing temperature.

The U.S. EPA recently published national recommended water quality criteria for the protection of aquatic life from the toxic effects of ammonia in freshwater (the "2013 Criteria")[1]. The 2013 Criteria is an update to U.S. EPA's 1999 Criteria, and varies based on pH and temperature. Although the 2013 Criteria reflects the latest scientific knowledge on the toxicity of ammonia to certain freshwater aquatic life, including new toxicity data on sensitive freshwater mussels in the Family Unionidae, the species tested for development of the 2013 Criteria may not be present in some Central Valley waterways. The 2013 Criteria document therefore states that, "*unionid mussel species are not prevalent in some waters, such as the arid west …*" and provides that, "*In the case of ammonia, where a state demonstrates that mussels are not present on a site-specific basis, the recalculation procedure may be used to remove the mussel species from the national criteria dataset to better represent the species present at the site.*"

The Central Valley Water Board issued a 3 April 2014 *California Water Code Section 13267 Order for Information: 2013 Final Ammonia Criteria for Protection of Freshwater Aquatic Life* (13267 Order) requiring the dischargers to either participate in an individual or group study to determine the presence of mussels or submit a method of compliance for complying with effluent limitations calculated assuming mussels present using the 2013 Criteria. The Dischargers submitted a letter to the Central Valley Water Board indicating their participation in the Central Valley Clean Water Association Freshwater Collaborative Mussel Study. Studies are currently underway to determine how the latest scientific knowledge on the toxicity of ammonia reflected in the 2013 Criteria can be implemented in the Central Valley Region as part of a Basin Planning effort to adopt nutrient and ammonia objectives. Until the Basin Planning process is completed, the Central Valley Water Board will continue to implement the 1999 Criteria to interpret the Basin Plan's narrative toxicity objective.

The Delta-Mendota Canal does not have a beneficial use of cold freshwater habitat and salmonids are not known to be present in the Delta-Mendota Canal. Therefore, the recommended 1999 acute criteria for waters where salmonids are not present were used in this Order. Because the Delta-Mendota Canal has a beneficial use of warm freshwater habitat and early fish life stages may be present, the recommended 1999 chronic criteria for waters where early fish life stages are present were used in this Order.

The maximum permitted effluent pH is 8.5 standard units. In order to protect against the worst-case short-term exposure of an organism, a pH value of 8.5 was used to derive the acute criterion. The resulting acute criterion is 3.20 mg/L (as N).

A chronic criterion was calculated for each day when paired temperature data and pH were measured using receiving water data for temperature and pH. The temperature of the receiving water varies seasonally.

[1] *Aquatic Life Ambient Water Quality Criteria for Ammonia – Freshwater*, published August 2013 [EPA 822-R-13-001]

Therefore, seasonal water quality criteria were calculated for the winter season (i.e., 1 October through 31 March) and the summer season (1 April through 30 September) using monthly pH and temperature data from the Delta-Mendota Canal between January 2010 and August 2014. The minimum criterion, or CCC, was established as the applicable 30-day average chronic criterion, or 30-day CCC, for each season. For the summer season, the most stringent 30-day CCC was 0.70 mg/L (as N) and the 4-day average concentration was 1.75 mg/L (as N). For the winter season, the most stringent 30-day CCC was 1.38 mg/L (as N) and the 4-day average concentration was 3.45 mg/L (as N).

(b) **RPA Results.** The City of Turlock RWQCF and the City of Modesto WQCF are POTW's that treats domestic wastewater. Untreated domestic wastewater contains ammonia in concentrations that, without treatment, would be harmful to fish and would violate the Basin Plan narrative toxicity objective if discharged to the receiving water. Reasonable potential therefore exists and effluent limitations are required.

Federal regulations at 40 C.F.R. section 122.44(d)(1)(i) requires that, "*Limitations must control all pollutants or pollutant parameters (either conventional, nonconventional, or toxic pollutants) which the Director determines are or may be discharged at a level which will cause, have the reasonable potential to cause, or contribute to an excursion above any State water quality standard, including State narrative criteria for water quality.*" For priority pollutants, the SIP dictates the procedures for conducting the RPA. Ammonia is not a priority pollutant. Therefore, the Central Valley Water Board is not restricted to one particular RPA method. Due to the site-specific conditions of the discharge, the Central Valley Water Board has used professional judgment in determining the appropriate method for conducting the RPA for this non-priority pollutant constituent.

U.S. EPA's September 2010 NPDES Permit Writer's Manual, page 6-30, states, "*State implementation procedures might allow, or even require, a permit writer to determine reasonable potential through a qualitative assessment process without using available facility-specific effluent monitoring data or when such data are not available…A permitting authority might also determine that WQBEL's are required for specific pollutants for all facilities that exhibit certain operational or discharge characteristics (e.g., WQBEL's for pathogens in all permits for POTW's discharging to contact recreational waters).*" U.S. EPA's TSD also recommends that factors other than effluent data should be considered in the RPA, "*When determining whether or not a discharge causes, has the reasonable potential to cause, or contributes to an excursion of a numeric or narrative water quality criterion for individual toxicants or for toxicity, the regulatory authority can use a variety of factors and information where facility-specific effluent monitoring data are unavailable. These factors also should be considered with available effluent monitoring data*." With regard to POTW's, U.S. EPA recommends that, "*POTW's should also be characterized for the possibility of chlorine and ammonia problems.*" (TSD, p. 50).

Nitrification is a biological process that converts ammonia to nitrite and nitrite to nitrate. Denitrification is a process that converts nitrate to nitrite

or nitric oxide and then to nitrous oxide or nitrogen gas, which is then released to the atmosphere. The City of Turlock RWQCF and City of Modesto WQCF currently use nitrification to remove ammonia from the waste stream. Inadequate or incomplete nitrification may result in the discharge of ammonia to the receiving stream. Ammonia is known to cause toxicity to aquatic organisms in surface waters. Discharges of ammonia in concentrations that produce detrimental physiological responses to human, plant, animal, or aquatic life would violate the Basin Plan narrative toxicity objective. Although both facilities nitrify the discharge, inadequate or incomplete nitrification creates the potential for ammonia to be discharged and provides the basis for the discharge to have a reasonable potential to cause or contribute to an in-stream excursion above the NAWQC. Therefore, the Central Valley Water Board finds the discharges have reasonable potential for ammonia and WQBEL's are required for both facilities.

(c) **WQBEL's.** The Central Valley Water Board calculates WQBEL's in accordance with SIP procedures for non-CTR constituents, and ammonia is a non-CTR constituent. The SIP procedure assumes a 4-day averaging period for calculating the long-term average discharge condition (LTA). However, U.S. EPA recommends modifying the procedure for calculating permit limits for ammonia using a 30-day averaging period for the calculation of the LTA corresponding to the 30-day CCC. Therefore, while the LTA's corresponding to the acute and 4-day chronic criteria were calculated according to SIP procedures, the LTA corresponding to the 30-day CCC was calculated assuming a 30-day averaging period. The lowest LTA representing the acute, 4-day CCC, and 30-day CCC is then selected for deriving the AMEL and the AWEL. The remainder of the WQBEL calculation for ammonia was performed according to the SIP procedures. The coefficient of variation (CV) for both facilities is 0.6; therefore, the effluent limitations for both facilities are the same. This Order contains a final seasonal WQBEL's for ammonia. For the summer season the AMEL and AWEL are 0.85 mg/L and 1.5 mg/L ammonia (as N), respectively, and for the winter season the AMEL and AWEL are 1.6 mg/L and 2.8 mg/L ammonia (as N), respectively.

(d) **Plant Performance and Attainability**

City of Turlock RWQCF: For the City of Turlock RWQCF, based on 142 samples collected between July 2012 and June 2015, the maximum effluent ammonia concentration was 4.4 mg/L. The exceedance occurred during a period when maintenance activities caused a spike in ammonia and the value is not representative of Facility performance. Typically, the Facility removes ammonia to concentrations that are not detectable in the effluent. In 137 of the 142 samples, ammonia was not detected in the effluent with an MDL of 0.5 mg/L. Thus the Central Valley Water Board concludes that immediate compliance with these effluent limitations is feasible.

City of Modesto WQCF: For the City of Modesto WQCF, based on 11 samples collected between August 2014 and March 2015, the maximum weekly effluent ammonia concentration was 0.46 mg/L, which does not exceed the WQBEL's. Thus the Central Valley Water Board

concludes that immediate compliance with these effluent limitations is feasible.

iii. **Bis (2-ethylhexyl) Phthalate**

(a) **WQO.** The CTR includes a criterion of 1.8 µg/L for bis (2-ethylhexyl) phthalate for the protection of human health for waters from which both water and organisms are consumed.

(b) **RPA Results**

City of Turlock RWQCF: For the City of Turlock RWQCF, the MEC for bis (2-ethylhexyl) phthalate was 6.6 µg/L based on 21 samples collected between July 2012 and June 2015. Bis (2-ethylhexyl) phthalate was not detected in the receiving water based on two samples collected in October 2014.

Bis (2-ethylhexyl) phthalate is a common contaminant of sample containers, sampling apparatus, an analytical equipment, and sources of detected bis (2-ethylhexyl) phthalate may be from plastics used for sampling or analytical equipment. However, the laboratory data sheets for the detected results do not indicate that the detections are the result of laboratory contamination and there is a known industrial discharger (plastic recycler) that could reasonably discharge bis (2-ethylhexyl) phthalate to the collection system. Therefore, bis (2-ethylhexyl) phthalate in the discharge has a reasonable potential to cause or contribute to an in-stream excursion above the CTR criterion.

City of Modesto WQCF: For the City of Modesto WQCF, bis (2-ethylhexyl) phthalate was not detected in the effluent based on two samples collected in August 2014 and October 2014. Bis (2-ethylhexyl) phthalate was not detected in the receiving water based on two samples collected in October 2014. Therefore, bis (2-ethylhexyl) phthalate in the discharge does not have a reasonable potential to cause or contribute to an in-stream excursion above the CTR criterion.

(c) **WQBEL's**

City of Turlock RWQCF: The receiving water contains assimilative capacity for bis (2-ethylhexyl) phthalate; therefore, as discussed further in section IV.C.2.c of this Fact Sheet, a dilution credit of 5 was allowed in the development of the WQBEL's for bis (2-ethylhexyl) phthalate. This Order contains a final AMEL and MDEL for bis (2-ethylhexyl) phthalate of 10 µg/L and 30 µg/L, respectively, based on the CTR criterion for the protection of human health.

City of Modesto WQCF: This Order does not include effluent limitations for bis (2-ethylhexyl) phthalate for the City of Modesto WQCF.

(d) **Plant Performance and Attainability**

City of Turlock RWQCF: Analysis of the effluent data shows that the MEC of 6.6 µg/L is less than the applicable WQBEL's. The Central Valley Water Board concludes, therefore, that immediate compliance with these effluent limitations is feasible.

City of Modesto WQCF: This Order does not include effluent limitations for bis (2-ethylhexyl) phthalate for the City of Modesto WQCF.

iv. **Chlorine Residual**

(a) **WQO.** U.S. EPA developed NAWQC for protection of freshwater aquatic life for chlorine residual. The recommended 4-day average (chronic) and 1-hour average (acute) criteria for chlorine residual are 0.011 mg/L and 0.019 mg/L, respectively. These criteria are protective of the Basin Plan's narrative toxicity objective.

(b) **RPA Results**

City of Turlock RWQCF: The City of Turlock RWQCF uses chlorine for disinfection. The concentrations of chlorine used to disinfect wastewater are high enough to harm aquatic life and violate the Basin Plan narrative toxicity objective if discharged to the receiving water. Reasonable potential therefore does exist and effluent limits are required.

Federal regulations at 40 C.F.R. section 122.44(d)(1)(i) requires that, "*Limitations must control all pollutants or pollutant parameters (either conventional, nonconventional, or toxic pollutants) which the Director determines are or may be discharged at a level which will cause, have the reasonable potential to cause, or contribute to an excursion above any State water quality standard, including State narrative criteria for water quality.*" For priority pollutants, the SIP dictates the procedures for conducting the RPA. Chlorine is not a priority pollutant. Therefore, the Central Valley Water Board is not restricted to one particular RPA method. Due to the site-specific conditions of the discharge, the Central Valley Water Board has used its judgment in determining the appropriate method for conducting the RPA for this non-priority pollutant constituent.

U.S. EPA's September 2010 NPDES Permit Writer's Manual, page 6-30, states, "*State implementation procedures might allow, or even require, a permit writer to determine reasonable potential through a qualitative assessment process without using available facility-specific effluent monitoring data or when such data are not available…A permitting authority might also determine that WQBEL's are required for specific pollutants for all facilities that exhibit certain operational or discharge characteristics (e.g., WQBEL's for pathogens in all permits for POTW's discharging to contact recreational waters).*" U.S. EPA's TSD also recommends that factors other than effluent data should be considered in the RPA, "*When determining whether or not a discharge causes, has the reasonable potential to cause, or contributes to an excursion of a numeric or narrative water quality criterion for individual toxicants or for toxicity, the regulatory authority can use a variety of factors and information where facility-specific effluent monitoring data are unavailable. These factors also should be considered with available effluent monitoring data.*" With regard to POTW's, U.S. EPA recommends that, "*POTW's should also be characterized for the possibility of chlorine and ammonia problems.*" (TSD, p. 50).

The City of Turlock RWQCF uses chlorine for disinfection, which is extremely toxic to aquatic organisms. Although the City of Turlock RWQCF uses a dechlorination agent such as sodium bisulfite process to dechlorinate the effluent prior to discharge to the Delta-Mendota Canal, the existing chlorine use and the potential for chlorine to be discharged

provides the basis for the discharge to have a reasonable potential to cause or contribute to an in-stream excursion above the NAWQC.

City of Modesto WQCF: The City of Modesto WQCF uses UV disinfection an does not use chlorine in the treatment system. Therefore, the City of Modesto WQCF does not have reasonable potential to cause or contribute to an in-stream excursion above the NAWQC for chlorine.

(c) **WQBEL's**

City of Turlock RWQCF: The TSD contains statistical methods for converting chronic (4-day) and acute (1-hour) aquatic life criteria to average monthly and maximum daily effluent limitations based on the variability of the existing data and the expected frequency of monitoring. However, because chlorine is an acutely toxic constituent that can and will be monitored continuously, an average 1-hour limitation is considered more appropriate than an average daily limitation. This Order contains a 4-day average effluent limitation and 1-hour average effluent limitation for chlorine residual of 0.011 mg/L and 0.019 mg/L, respectively, for the City of Turlock RWQCF based on U.S. EPA's NAWQC, which implements the Basin Plan's narrative toxicity objective for protection of aquatic life.

City of Modesto WQCF: This Order does not include effluent limitations for chlorine residual for the City of Modesto WQCF.

(d) **Plant Performance and Attainability**

City of Turlock RWQCF: The City of Turlock RWQCF provides dechlorination using sodium bisulfite. Thus, the Central Valley Water Board concludes that immediate compliance with these effluent limitations is feasible.

City of Modesto WQCF: This Order does not include effluent limitations for chlorine residual for the City of Modesto WQCF.

v. **Chlorodibromomethane**

(a) **WQO.** The CTR includes a criterion of 0.41 µg/L for chlorodibromomethane for the protection of human health for waters from which both water and organisms are consumed.

(b) **RPA Results**

City of Turlock RWQCF: For the City of Turlock RWQCF, the MEC for chlorodibromomethane was 14.5 µg/L based on 36 samples collected between July 2012 and June 2015. Chlorodibromomethane was not detected in the receiving water based on two samples collected in October 2014. Therefore, chlorodibromomethane in the discharge has a reasonable potential to cause or contribute to an in-stream excursion above the CTR criterion for the protection of human health.

City of Modesto WQCF: For the City of Modesto WQCF, chlorodibromomethane was not detected in the effluent based on two samples collected in August 2014 and October 2014. Chlorodibromomethane was not detected in the receiving water based on two samples collected in October 2014. Therefore, chlorodibromomethane in the discharge does not have a reasonable potential to cause or contribute to an in-stream excursion above the CTR criterion.

(c) **WQBEL's**

City of Turlock RWQCF: The receiving water contains assimilative capacity for chlorodibromomethane; therefore, as discussed further in section IV.C.2.c of this Fact Sheet, a dilution credit of 48 was allowed in the development of the WQBEL's for chlorodibromomethane. This Order contains a final AMEL and MDEL for chlorodibromomethane of 19 µg/L and 30 µg/L, respectively, based on the CTR criterion for the protection of human health.

City of Modesto WQCF: This Order does not include effluent limitations for chlorodibromomethane for the City of Modesto WQCF.

(d) **Plant Performance and Attainability**

City of Turlock RWQCF: Analysis of the effluent data shows that the MEC of 14.5 µg/L is less than the applicable WQBEL's. The Central Valley Water Board concludes, therefore, that immediate compliance with these effluent limitations is feasible.

City of Modesto WQCF: This Order does not include effluent limitations for chlorodibromomethane for the City of Modesto WQCF.

vi. **Diazinon and Chlorpyrifos**

(a) **WQO.** The Central Valley Water Board adopted a Basin Plan amendment for diazinon and chlorpyrifos to include diazinon and chlorpyrifos WLA's and water quality objectives for all waters with designated or existing WARM and/or COLD beneficial uses that are not upstream of the major dams.

The amendment states that "*The Waste Load Allocations (WLA) for all NPDES-permitted dischargers…shall not exceed the sum (S) of one (1) as defined below.*

$$S = \frac{C_d}{WQO_d} + \frac{C_c}{WQO_c} \leq 1.0$$

Where:

C_D *= diazinon concentration in µg/L of point source discharge for WLA…*

C_C *= chlorpyrifos concentration in µg/L of point source discharge for the WLA…*

WQO_d *= acute or chronic diazinon water quality objective in µg/L.*

WQO_c *= acute or chronic chlorpyrifos water quality objective in µg/L.*

Available samples collected within the applicable averaging period for the water quality objective will be used to determine compliance with the allocations and loading capacity. For purposes of calculating the sum (S) above, analytical results that are reported as 'non-detectable' concentrations are considered to be zero."

The water quality objectives for chlorpyrifos are 0.025 µg/L as a 1-hour average (acute) and 0.015 µg/L as a 4-day average (chronic), not to be exceeded more than once in a 3-year period. The water quality objectives for diazinon are 0.16 µg/L as a 1-hour average (acute) and 0.10 µg/L as a

4-day average (chronic), not to be exceeded more than once in a 3-year period.

(b) **RPA Results**

City of Turlock RWQCF: Chlorpyrifos was detected but not quantified in the effluent at an estimated concentration of 0.15 µg/L based on 10 samples collected between July 2012 and June 2015. Based on 10 samples collected between July 2012 and June 2015, diazinon was not detected in the effluent. However, due to the TMDL for diazinon and chlorpyrifos in the San Joaquin River, WQBEL's for these constituents are required. The TMDL WLA applies to all NPDES dischargers to the Lower San Joaquin River and its tributaries and will serve as the basis for WQBEL's.

City of Modesto WQCF: Chlorpyrifos was not detected in the effluent based on two samples collected in August 2014 and October 2014. Diazinon was not detected in the effluent based on two samples collected in August 2014 and October 2014. However, due to the TMDL for diazinon and chlorpyrifos in the San Joaquin River, WQBEL's for these constituents are required. The TMDL WLA applies to all NPDES dischargers to the Lower San Joaquin River and its tributaries and will serve as the basis for WQBEL's.

(c) **WQBEL's.** WQBEL's for diazinon and chlorpyrifos are required based on the TMDL for diazinon and chlorpyrifos for the Lower San Joaquin River. Therefore, this Order includes effluent limits for both facilities calculated based on the WLA's contained in the TMDL, as follows:

(1) Average Monthly Effluent Limitation (AMEL)

$$S_{AMEL} = \frac{C_{D\ M-avg}}{0.079} + \frac{C_{C\ M-avg}}{0.012} \leq 1.0$$

$C_{D\ M\text{-}avg}$ = average monthly diazinon effluent concentration in µg/L.

$C_{C\ M\text{-}avg}$ = average monthly chlorpyrifos effluent concentration in µg/L.

(2) Average Weekly Effluent Limitation (AWEL)

$$S_{AWEL} = \frac{C_{D\ W-avg}}{0.14} + \frac{C_{C\ W-avg}}{0.021} \leq 1.0$$

$C_{D\ W\text{-}avg}$ = average weekly diazinon effluent concentration in µg/L.

$C_{C\ W\text{-}avg}$ = average weekly chlorpyrifos effluent concentration in µg/L.

(d) **Plant Performance and Attainability**

City of Turlock RWQCF: Diazinon was not detected in the effluent and chlorpyrifos was detected at an estimated concentration only once in ten samples. The Central Valley Water Board concludes that immediate compliance with these effluent limitations is feasible.

City of Modesto WQCF: Diazinon and chlorpyrifos were not detected in the effluent. The Central Valley Water Board concludes that immediate compliance with these effluent limitations is feasible.

vii. **Dichlorobromomethane**

(a) **WQO.** The CTR includes a criterion of 0.56 µg/L for dichlorobromomethane for the protection of human health for waters from which both water and organisms are consumed.

(b) **RPA Results**

City of Turlock RWQCF: For the City of Turlock RWQCF, the MEC for dichlorobromomethane was 41.9 µg/L based on 36 samples collected between July 2012 and June 2015. Dichlorobromomethane was not detected in the receiving water based on two samples collected in October 2014. Therefore, dichlorobromomethane in the discharge has a reasonable potential to cause or contribute to an in-stream excursion above the CTR criterion for the protection of human health.

City of Modesto WQCF: For the City of Modesto WQCF, dichlorobromomethane was not detected in the effluent based on two samples collected in August 2014 and October 2014. Dichlorobromomethane was not detected in the receiving water based on two samples collected in October 2014. Therefore, dichlorobromomethane in the discharge does not have a reasonable potential to cause or contribute to an in-stream excursion above the CTR criterion.

(c) **WQBEL's**

City of Turlock RWQCF: The receiving water contains assimilative capacity for dichlorobromomethane; therefore, as discussed further in section IV.C.2.c of this Fact Sheet, a dilution credit of 97 was allowed in the development of WQBEL's for dichlorobromomethane. This Order contains a final AMEL and MDEL for dichlorobromomethane of 52 µg/L and 79 µg/L, respectively, based on the CTR criterion for the protection of human health.

City of Modesto WQCF: This Order does not include effluent limitations for chlorodibromomethane for the City of Modesto WQCF.

(d) **Plant Performance and Attainability**

City of Turlock RWQCF: Analysis of the effluent data shows that the MEC of 41.9 µg/L is less than the applicable WQBEL's. The Central Valley Water Board concludes, therefore, that immediate compliance with these effluent limitations is feasible.

City of Modesto WQCF: This Order does not include effluent limitations for chlorodibromomethane for the City of Modesto WQCF.

viii. **Mercury**

(a) **WQO.** The current NAWQC for protection of freshwater aquatic life, continuous concentration, for mercury is 0.77 µg/L (30-day average, chronic criteria). The CTR contains a human health criterion (based on a threshold dose level causing neurological effects in infants) of 0.050 µg/L for waters from which both water and aquatic organisms are consumed. Both values are controversial and subject to change. In 40 C.F.R. Part 131, U.S. EPA acknowledges that the human health

criteria may not be protective of some aquatic or endangered species and that "…*more stringent mercury limits may be determined and implemented through use of the State's narrative criterion.*" In the CTR, U.S. EPA reserved the mercury criteria for freshwater and aquatic life and may adopt new criteria at a later date.

(b) **RPA Results.**

City of Turlock RWQCF: The MEC for mercury was 0.013 µg/L based on 37 samples collected between July 2012 and June 2015. The maximum mercury concentration in the upstream receiving water was 0.0013 µg/L based on 2 samples collected between September 2014 and October 2014 (MDL 0.0002 µg/L). Mercury bioaccumulates in fish tissue and, therefore, the discharge of mercury to the receiving water may contribute to exceedances of the narrative toxicity objective and impact beneficial uses. Furthermore, the O'Neill Forebay, San Luis Reservoir, and the Mendota Pool, which are downstream of the Delta-Mendota Canal are impaired for mercury.

City of Modesto WQCF: The MEC for mercury was 0.0013 µg/L based on 7 samples collected between July 2012 and June 2015. The maximum mercury concentration in the upstream receiving water was 0.0013 µg/L based on 2 samples collected between September 2014 and October 2014 (MDL 0.0002 µg/L). Mercury bioaccumulates in fish tissue and, therefore, the discharge of mercury to the receiving water may contribute to exceedances of the narrative toxicity objective and impact beneficial uses. Furthermore, the O'Neill Forebay, San Luis Reservoir, and the Mendota Pool, which are downstream of the Delta-Mendota Canal are impaired for mercury.

(c) **WQBEL's.**

City of Turlock RWQCF: This Order includes a performance-based mass effluent limitation of 0.82 lbs/year as a final limitation for mercury for the effluent discharged to the receiving water. This limitation is based on maintaining the mercury loading at the current level until a TMDL can be established and U.S. EPA develops mercury standards that are protective of human health.

City of Modesto WQCF: This Order includes a performance-based mass effluent limitation of 1.162 lbs/year as a final limitation for mercury for the effluent discharged to the receiving water. This limitation is based on maintaining the mercury loading at the current level until a TMDL can be established and U.S. EPA develops mercury standards that are protective of human health.

(d) **Plant Performance and Attainability.** The City of Turlock and City of Modesto has demonstrated compliance with these performance-based loading limits. Therefore, the Central Valley Water Board concludes that immediate compliance with these effluent limitations is feasible.

ix. **Nitrate Plus Nitrite**

(a) **WQO.** The discharge of nitrates may impact municipal beneficial uses. Excessive nitrates in drinking water pose a human health concern, particularly for human fetuses and infants. Excessive nitrogen in the form of nitrates can also contribute to excessive algal growth, which also has impacts on municipal uses. The applicable narrative water quality objectives are as follows:

(1) *Chemical Constituents*. Waters shall not contain chemical constituents in concentrations that adversely affect beneficial uses. DDW has adopted a primary MCL of 10 mg/L for the sum of nitrate and nitrite, measured as nitrogen, which implements the narrative chemical constituents objective for the protection of the MUN beneficial use.

(2) *Biostimulatory Substances*. Water shall not contain biostimulatory substances which promote aquatic growths in concentrations that cause nuisance or adversely affect beneficial uses.

(3) *Taste and Odors*. Water shall not contain taste- or odor-producing substances in concentrations that impart undesirable tastes or odors to domestic or municipal water supplies or to fish flesh or other edible products of aquatic origin, or that cause nuisance, or otherwise adversely affect beneficial uses.

USEPA has established CWA section 304(a) criteria for total nitrogen of 0.31 mg/L in its Aggregate Ecoregion I criteria[1] that may be used to interpret the biostimulatory substances and taste and odors narrative objectives. USEPA's nutrient criterion for streams and rivers address cultural eutrophication, which is the adverse effects of excess human-caused nutrient inputs. The criterion was derived to represent surface waters that are minimally impacted by human activities and protective of aquatic life and recreational uses.

(b) **RPA Results.** The City of Turlock RWQCF and the City of Modesto WQCF are POTW's that treat domestic wastewater. Untreated domestic wastewater contains ammonia in concentrations that, if untreated, will be harmful to fish and will violate the Basin Plan's narrative toxicity objective. This Order, therefore, requires removal of ammonia (i.e., nitrification). Nitrification is a biological process that converts ammonia to nitrate and nitrite, and will result in effluent nitrate concentrations above the Primary MCL for nitrate plus nitrite. Nitrate concentrations in a drinking water supply above the Primary MCL threatens the health of human fetuses and newborn babies by reducing the oxygen-carrying capacity of the blood (methemoglobinemia). Reasonable potential for nitrate and nitrite therefore exists and WQBEL's are required.

The discharge of nitrate also has reasonable potential to cause or contribute to an exceedance of the Basin Plan's narrative water quality

[1] Ambient Water Quality Criteria Recommendations, Rivers and Streams in Nutrient Ecoregion 1, USEPA December 2001 (EPA 822-B-01-012)

objectives for biostimulatory substances and taste and odors. Based on modeling[1] by the Discharger, the proposed discharge is estimated to increase nitrate concentrations at water export locations (e.g, San Luis Reservoir and O'Neill Forebay). Although the nitrate impacts from the Facility in San Luis Reservoir are minimal (i.e., estimated incremental increase of 0.05 mg/L nitrate, as N as a long-term average) there is evidence in the record that harmful algal blooms and eutrophication is occurring in the water export facilities (Archibald Consulting et al. 2012)[2](Heidel et al. 2006)[3], therefore, there is no assimilative capacity for nutrients, such as nitrate, and the discharges have reasonable potential cause or contribute to exceedances of these water quality objectives.

The discharge of nutrients can cause excessive algal growth, which impacts the MUN beneficial use by increasing total organic carbon (TOC), reduces water treatment plant efficiency, and causes taste and odor issues. (Heidel et al. 2006) Elevated TOC negatively impacts municipal drinking water suppliers, because it can result in the creation of harmful byproducts during chlorination. Drinking water suppliers must remove TOC prior to chlorination if the TOC concentrations are too high. High nutrient levels in source water can also impact water conveyance systems and treatment plants, because algae can clog filters and reduce the efficiency of filtration, and algae and aquatic weeds can clog conveyance systems. Finally, some species of bluegreen algae are associated with the production of compounds such as geosmin and 2-methylisoborneol (MIB) that impart objectionable odors and tastes to waters, even at very low concentrations. Taste and odor problems may be resolved with algaecides. But the predominant algaecides are copper-based, which creates solid waste disposal problems as well as aquatic toxicity issues. Other species of blue green algae, in particular *Anabaena flos-aquae, Microcystis aeruginosa, and Aphanizomenon flos-aquae*, produce neurotoxins that are toxic to humans, fish, and wildlife.

Federal regulations at 40 C.F.R. section 122.44(d)(1)(i) requires that, "*Limitations must control all pollutants or pollutant parameters (either conventional, nonconventional, or toxic pollutants) which the Director determines are or may be discharged at a level which will cause, have the reasonable potential to cause, or contribute to an excursion above any State water quality standard, including State narrative criteria for water quality.*" For priority pollutants, the SIP dictates the procedures for conducting the RPA. Nitrate and nitrite are not priority pollutants. Therefore, the Central Valley Water Board is not restricted to one particular RPA method. Due to the site-specific conditions of the discharge, the Central Valley Water Board has used professional judgment

[1] Technical Memorandum prepared by Larry Walker Associates, "North Valley Regional Recycled Water Program, Addendum No. 2 to Antidegradation Analysis for Proposed Recycled Water Discharge to the Delta-Mendota Canal, Updated Estimate of Far-Field Nitrate Plus Nitrite Water Quality Impacts", 12 November 2015
[2] Archibald Consulting et al. 2012. California State Water Project Watershed Sanitary Survey, 2011 Update. Prepared for the State Water Project Contractors Authority and the California Department of Water Resources.
[3] Heidel, K., et al. 2006, Conceptual Model for Nutrients in the Central Valley and Sacramento-San Joaquin Delta,

in determining the appropriate method for conducting the RPA for this non-priority pollutant constituent.

U.S. EPA's September 2010 NPDES Permit Writer's Manual, page 6-30, states, "*State implementation procedures might allow, or even require, a permit writer to determine reasonable potential through a qualitative assessment process without using available facility-specific effluent monitoring data or when such data are not available…A permitting authority might also determine that WQBEL's are required for specific pollutants for all facilities that exhibit certain operational or discharge characteristics (e.g., WQBEL's for pathogens in all permits for POTW's discharging to contact recreational waters).*" U.S. EPA's TSD also recommends that factors other than effluent data should be considered in the RPA, "*When determining whether or not a discharge causes, has the reasonable potential to cause, or contributes to an excursion of a numeric or narrative water quality criterion for individual toxicants or for toxicity, the regulatory authority can use a variety of factors and information where facility-specific effluent monitoring data are unavailable. These factors also should be considered with available effluent monitoring data*." With regard to POTW'S, U.S. EPA recommends that, "*POTW's should also be characterized for the possibility of chlorine and ammonia problems*." (TSD, p. 50).

The concentration of nitrogen in raw domestic wastewater is sufficiently high that the resultant treated wastewater has a reasonable potential to exceed or threaten to exceed the Primary MCL for nitrate plus nitrite unless the wastewater is treated for nitrogen removal, and therefore an effluent limit for nitrate plus nitrite is required. Denitrification is a process that converts nitrate to nitrite or nitric oxide and then to nitrous oxide or nitrogen gas, which is then released to the atmosphere. Inadequate or incomplete denitrification may result in the discharge of nitrate and/or nitrite to the receiving stream. Discharges of nitrate plus nitrite in concentrations that exceed the Primary MCL would violate the Basin Plan narrative chemical constituents objective. Inadequate or incomplete denitrification creates the potential for nitrate and nitrite to be discharged and provides the basis for the discharge to have a reasonable potential to cause or contribute to an in-stream excursion above the Primary MCL. Therefore, the Central Valley Water Board finds the discharges have reasonable potential for nitrate plus nitrite and WQBEL's are required.

(c) **WQBEL's**

The Basin Plan states, "Controllable water quality factors are not allowed to cause further degradation of water quality in instances where other factors have already resulted in water quality objectives being exceeded. Controllable water quality factors are those actions, conditions, or circumstances resulting from human activities that may influence the quality of the waters of the State, that are subject to the authority of the State Water Board or Regional Water Board, and that may be reasonably controlled." (page IV-15.00) Since the water export areas are presently

exhibiting cultural eutrophication[1,2], nutrient controls are necessary to protect beneficial uses.

City of Turlock RWQCF: The effluent limitations for the City of Turlock RWQCF were calculated using a CV of 0.14. This Order contains a final AMEL and AWEL for nitrate plus nitrite of 10 mg/L and 12 mg/L (total as N), based on the Primary MCL. These effluent limitations are included in this Order to assure the treatment process adequately nitrifies and denitrifies the waste stream to protect the beneficial use of municipal and domestic supply.

City of Modesto WQCF: The effluent limitations for the City of Modesto WQCF were calculated using a CV of 0.87. This Order contains a final AMEL and AWEL for nitrate plus nitrite of 10 mg/L and 19 mg/L (total as N), based on the Primary MCL. These effluent limitations are included in this Order to assure the treatment process adequately nitrifies and denitrifies the waste stream to protect the beneficial use of municipal and domestic supply.

These effluent limits are readily achievable using standard denitrification technologies. Although WQBELs based on USEPA's Aggregate Ecoregion I Criteria for total nitrogen would further reduce nutrient loading, WQBELs based on this criteria is not technologically feasible with standard treatment technologies. Additionally, nutrient cycling in waterways is complex, USEPA's Ecoregion I Criteria have not been developed considering the unique nutrient needs and characteristics in the vicinity of the discharge; and therefore, may not be directly applicable. As part of its 2014 Delta Strategic Work Plan, the Central Valley Water Board is implementing the Delta Nutrient Research Plan[3] to evaluate the need for nutrient objectives to protect the beneficial uses of the Delta. If applicable nutrient objectives are adopted by the Central Valley Water Board this Order may be reopened to implement the objectives.

(d) **Plant Performance and Attainability**

City of Turlock RWQCF: The maximum effluent nitrate concentration was 21.5 mg/L based on 36 samples collected between July 2012 and June 2015. Based on the sample results for the effluent, the limitations appear to put the Discharger in immediate non-compliance. However, the City of Turlock has indicated that modifications to the RWQCF operations can be made provide denitrification and immediate compliance with the final effluent limitations for nitrate plus nitrite.

City of Modesto WQCF: Analysis of the effluent data shows that the maximum effluent nitrate concentration of 6.87 mg/L does not exceed the

[1] Archibald Consulting et al. 2012. California State Water Project Watershed Sanitary Survey, 2011 Update. Prepared for the State Water Project Contractors Authority and the California Department of Water Resources;
[2] Alameda County Flood Control District et al., Summary of Drinking Water Quality Issues and Requested Permit Conditions for the Sacramento Regional Wastewater Treatment Plant NPDES Permit Renewal, (December 2007)
[3] For more information see the Central Valley Water Board Delta Nutrient Research Plan website: http://www.waterboards.ca.gov/centralvalley/water_issues/delta_water_quality/delta_nutrient_research_plan/index.shtml

applicable WQBEL's. The Central Valley Water Board concludes, therefore, that immediate compliance with these effluent limitations is feasible.

x. **Pathogens**

(a) **WQO.** The State Water Board Division of Drinking Water (DDW) has developed reclamation criteria, CCR, Division 4, Chapter 3 (Title 22), for the reuse of wastewater. Title 22 requires that for spray irrigation of food crops, parks, playgrounds, schoolyards, and other areas of similar public access, wastewater be adequately disinfected, oxidized, coagulated, clarified, and filtered, and that the effluent total coliform levels not exceed 2.2 MPN/100 mL as a 7-day median; 23 MPN/100 mL, not to be exceeded more than once in a 30-day period; and 240 MPN/100 mL, at any time.

Title 22 also requires that recycled water used as a source of water supply for non-restricted recreational impoundments be disinfected tertiary recycled water that has been subjected to conventional treatment. A non-restricted recreational impoundment is defined as *"…an impoundment of recycled water, in which no limitations are imposed on body-contact water recreational activities.*" Title 22 is not directly applicable to surface waters; however, the Central Valley Water Board finds that it is appropriate to apply an equivalent level of treatment to that required by the DDW's reclamation criteria because the receiving water is used for irrigation of agricultural land and the Basin Plan has designated the beneficial uses of contact and non-contact water recreation (REC-1 and REC-2). The stringent disinfection criteria of Title 22 are appropriate since the undiluted effluent may be used for the irrigation of food crops and/or for the protection of the water recreation beneficial uses. Coliform organisms are intended as an indicator of the effectiveness of the entire treatment train and the effectiveness of removing other pathogens.

The Delta-Mendota Canal is a manmade conveyance facility operated by the United States Bureau of Reclamation (USBR) in coordination with other agencies and downstream water users. The Delta-Mendota Canal transports Delta water pumped near the City of Tracy at the Jones Pumping Plant to agricultural users in the North Valley and to south of Delta wildlife refuges. Approximately 33 miles downstream of the discharge point, water from the Delta-Mendota Canal is diverted to O'Neil Forebay and comingles with water from the California Aqueduct, which is operated by the California Department of Water Resources and is stored in San Luis Reservoir. The California Aqueduct and San Luis Reservoir are drinking water facilities that provide municipal drinking water to Southern California and the Bay Area. Based on the Dischargers Antidegradation Analysis[1], the reasonable-worse case modeled long-term average effluent fraction of the NVRRWP flow at full buildout (52.7 MGD) in San Luis Reservoir was estimated to range from 1.01% - 1.78% as a monthly average. While effluent fractions at the current permitted capacity

[1] *Antidegradation Analysis for Proposed Recycled Water Discharge to the Delta-Mendota Canal* (Larry Walker Associates), 10 June 2015

(29.1 MGD) ranged from 0.57% - 1.00% as a monthly average.[1] These are likely overestimated because it was assumed that the Del Puerto Water District would make no diversions during the non-irrigation season.

Since the NVRRWP is a recycled water project and due to concerns about treated municipal wastewater entering drinking water conveyance and storage facilities, Central Valley Water Board staff consulted with State Water Board DDW staff regarding the appropriate permit requirements to protect public health. DDW maintained their recommendation for tertiary filtered wastewater to protect the municipal domestic water supply, agricultural water supply, and water contact recreation beneficial uses for discharges to surface water when there is less than 20:1 dilution. DDW supported the permitting approach in this Order, which requires disinfection equivalent to Title 22 tertiary recycled water. Furthermore, the discharge to the Delta-Mendota Canal, which is tributary to San Luis Reservoir, would not be classified by DDW as a drinking water Surface Water Augmentation project for which DDW is currently developing regulations.

RPA Results. Raw domestic wastewater inherently contains human pathogens that threaten human health and life, and constitute a threatened pollution and nuisance under CWC Section 13050 if discharged untreated to the receiving water. Reasonable potential for pathogens therefore exists and WQBEL's are required.

Federal regulations at 40 C.F.R. section 122.44(d)(1)(i) requires that, "*Limitations must control all pollutants or pollutant parameters (either conventional, nonconventional, or toxic pollutants) which the Director determines are or may be discharged at a level which will cause, have the reasonable potential to cause, or contribute to an excursion above any State water quality standard, including State narrative criteria for water quality.*" For priority pollutants, the SIP dictates the procedures for conducting the RPA. Pathogens are not priority pollutants. Therefore, the Central Valley Water Board is not restricted to one particular RPA method. Due to the site-specific conditions of the discharge, the Central Valley Water Board has used professional judgment in determining the appropriate method for conducting the RPA for this non-priority pollutant constituent.

U.S. EPA's September 2010 NPDES Permit Writer's Manual, page 6-30, states, "*State implementation procedures might allow, or even require, a permit writer to determine reasonable potential through a qualitative assessment process without using available facility-specific effluent monitoring data or when such data are not available…A permitting authority might also determine that WQBEL's are required for specific pollutants for all facilities that exhibit certain operational or discharge characteristics (e.g., WQBEL's for pathogens in all permits for POTW's discharging to contact recreational waters).*" U.S. EPA's TSD also

[1] Technical Memorandum prepared by Larry Walker Associates, "North Valley Regional Recycled Water Program, Addendum No. 2 to Antidegradation Analysis for Proposed Recycled Water Discharge to the Delta-Mendota Canal, Updated Estimate of Far-Field Nitrate Plus Nitrite Water Quality Impacts", 12 November 2015

recommends that factors other than effluent data should be considered in the RPA, "*When determining whether or not a discharge causes, has the reasonable potential to cause, or contributes to an excursion of a numeric or narrative water quality criterion for individual toxicants or for toxicity, the regulatory authority can use a variety of factors and information where facility-specific effluent monitoring data are unavailable. These factors also should be considered with available effluent monitoring data.*" (TSD, p. 50).

The beneficial uses of the Delta-Mendota Canal include municipal and domestic supply, water contact recreation, and agricultural irrigation supply, and there is, at times, less than 20:1 dilution. To protect these beneficial uses, the Central Valley Water Board finds that the wastewater must be disinfected and adequately treated to prevent disease. Although the Discharger provides disinfection, inadequate or incomplete disinfection creates the potential for pathogens to be discharged. Therefore, the Central Valley Water Board finds the discharge has reasonable potential for pathogens and WQBEL's are required.

(b) **WQBEL's.** In accordance with the requirements of Title 22, this Order includes effluent limitations for total coliform organisms of 2.2 MPN/100 mL as a 7-day median; 23 MPN/100 mL, not to be exceeded more than once in a 30-day period; and 240 MPN/100 mL as an instantaneous maximum.

The tertiary treatment process at the City of Turlock RWQCF is capable of reliably treating wastewater to a turbidity level of 2 nephelometric turbidity units (NTU) as a daily average. The City of Modesto WQCF uses a membrane filtration system, which is capable of reliably meeting a turbidity of 0.2 NTU as a daily average. Failure of the filtration system such that virus removal is impaired would normally result in increased particles in the effluent, which result in higher effluent turbidity. Turbidity has a major advantage for monitoring filter performance. Coliform testing, by comparison, is not conducted continuously and requires several hours, to days, to identify high coliform concentrations. Therefore, to ensure compliance with the DDW recommended Title 22 disinfection criteria, weekly average specifications are impracticable for turbidity. For the City of Turlock RWQCF, this Order includes operational specifications for turbidity of 2 NTU as a daily average; 5 NTU, not to be exceeded more than 5 percent of the time within a 24-hour period; and 10 NTU as an instantaneous maximum. For the City of Modesto WQCF, this Order includes operational specifications for turbidity of 0.2 NTU not to be exceeded more than 5% of the time within a 24-hour period and 0.2 NTU as an instantaneous maximum.

This Order contains effluent limitations for BOD_5, total coliform organisms, and TSS and requires a tertiary level of treatment, or equivalent, necessary to protect the beneficial uses of the receiving water. The Central Valley Water Board has previously considered the factors in Water Code section 13241 in establishing these requirements.

Final WQBEL's for BOD_5 and TSS are based on the technical capability of the tertiary process, which is necessary to protect the beneficial uses of the receiving water. BOD_5 is a measure of the amount of oxygen used in

the biochemical oxidation of organic matter. The tertiary treatment standards for BOD_5 and TSS are indicators of the effectiveness of the tertiary treatment process. The principal design parameter for wastewater treatment plants is the daily BOD_5 and TSS loading rates and the corresponding removal rate of the system. The application of tertiary treatment processes results in the ability to achieve lower levels for BOD_5 and TSS than the secondary standards currently prescribed. Therefore, this Order requires AMEL's for BOD_5 and TSS of 10 mg/L, which is technically based on the capability of a tertiary system. In addition to the average weekly and average monthly effluent limitations, a daily maximum effluent limitation for BOD_5 and TSS is included in the Order to ensure that the treatment works are not organically overloaded and operate in accordance with design capabilities.

(c) **Plant Performance and Attainability**

City of Turlock RWQCF: The City of Turlock RWQCF provides tertiary treatment and utilizes a chlorine disinfection system which was designed to achieve Title 22 criteria. The Central Valley Water Board concludes, therefore, that immediate compliance with these effluent limitations is feasible.

City of Modesto WQCF: The City of Modesto WQCF provides tertiary treatment and utilizes UV disinfection that was designed to achieve Title 22 criteria. The Central Valley Water Board concludes, therefore, that immediate compliance with these effluent limitations is feasible.

xi. **pH**

(a) **WQO.** The Basin Plan includes a water quality objective for surface waters (except for Goose Lake) that the *"…pH shall not be depressed below 6.5 nor raised above 8.5.*"

(b) **RPA Results.** Raw domestic wastewater inherently has variable pH. Additionally, some wastewater treatment processes can increase or decrease wastewater pH which if not properly controlled, would violate the Basin Plan's numeric objective for pH in the receiving water. Therefore, reasonable potential exists for pH and WQBEL's are required.

Federal regulations at 40 C.F.R. section 122.44(d)(1)(i) requires that, "*Limitations must control all pollutants or pollutant parameters (either conventional, nonconventional, or toxic pollutants) which the Director determines are or may be discharged at a level which will cause, have the reasonable potential to cause, or contribute to an excursion above any State water quality standard, including State narrative criteria for water quality.*" For priority pollutants, the SIP dictates the procedures for conducting the RPA. pH is not a priority pollutant. Therefore, the Central Valley Water Board is not restricted to one particular RPA method. Due to the site-specific conditions of the discharge, the Central Valley Water Board has used professional judgment in determining the appropriate method for conducting the RPA for this non-priority pollutant constituent.

U.S. EPA's September 2010 NPDES Permit Writer's Manual, page 6-30, states, "*State implementation procedures might allow, or even require, a permit writer to determine reasonable potential through a qualitative assessment process without using available facility-specific effluent*

monitoring data or when such data are not available…A permitting authority might also determine that WQBEL's are required for specific pollutants for all facilities that exhibit certain operational or discharge characteristics (e.g., WQBEL's for pathogens in all permits for POTW's discharging to contact recreational waters)." U.S. EPA's TSD also recommends that factors other than effluent data should be considered in the RPA, "*When determining whether or not a discharge causes, has the reasonable potential to cause, or contributes to an excursion of a numeric or narrative water quality criterion for individual toxicants or for toxicity, the regulatory authority can use a variety of factors and information where facility-specific effluent monitoring data are unavailable. These factors also should be considered with available effluent monitoring data.*" (TSD, p. 50).

The City of Turlock RWQCF and the City of Modesto WQCF are POTW's that treat domestic wastewater. For the City of Turlock RWQCF, the effluent pH ranged from 6.4 to 9.9. For the City of Modesto WQCF, the effluent pH ranged from 3.96 to 7.35. Although the Discharger's have proper pH controls in place, the pH for the influent varies due to the nature of municipal sewage, which provides the basis for the discharge to have a reasonable potential to cause or contribute to an in-stream excursion above the Basin Plan's numeric objective for pH in the receiving water. Therefore, WQBEL's for pH are required in this Order.

(c) **WQBEL's.** Effluent limitations for pH of 6.5 as an instantaneous minimum and 8.5 as an instantaneous maximum are included in this Order for both facilities based on protection of the Basin Plan objectives for pH.

(d) **Plant Performance and Attainability**

City of Turlock RWQCF: Based on available effluent pH data, it appears the City of Turlock RWQCF is able to comply with these limitations. The Central Valley Water Board concludes, therefore, that immediate compliance with these effluent limitations is feasible.

City of Modesto WQCF: Based on available effluent pH data, it appears the City of Modesto WQCF is able to comply with these limitations. The Central Valley Water Board concludes, therefore, that immediate compliance with these effluent limitations is feasible.

xii. **Salinity**

(a) **WQO.** The Basin Plan contains a chemical constituent objective that incorporates state MCLs, contains a narrative objective, and contains numeric water quality objectives for certain specified water bodies for electrical conductivity, total dissolved solids, sulfate, and chloride. The U.S. EPA Ambient Water Quality Criteria for Chloride recommends acute and chronic criteria for the protection of aquatic life. There are no U.S. EPA water quality criteria for the protection of aquatic life for electrical conductivity, total dissolved solids, and sulfate. Additionally, there are no U.S. EPA numeric water quality criteria for the protection of agricultural, live stock, and industrial uses. Numeric values for the protection of these uses are typically based on site specific conditions and evaluations to determine the appropriate constituent threshold necessary to interpret the narrative chemical constituent Basin Plan objective. The Central Valley

Water Board must determine the applicable numeric limit to implement the narrative objective for the protection of agricultural supply. The Central Valley Water Board is currently implementing the CV-SALTS initiative to develop a Basin Plan Amendment that will establish a salt and nitrate Management Plan for the Central Valley. Through this effort the Basin Plan will be amended to define how the narrative water quality objective is to be interpreted for the protection of agricultural use. All studies conducted through this Order to establish an agricultural limit to implement the narrative objective will be reviewed by and consistent with the efforts currently underway by CV-SALTS.

Table F-10. Salinity Water Quality Criteria/Objectives

Parameter	Agricultural WQ Objective[1]	Secondary MCL[2]	U.S. EPA NAWQC	City of Turlock RWQCF Effluent		City of Modesto WQCF Effluent	
				Average[3]	Maximum	Average[3]	Maximum
EC (µmhos/cm)	Varies[2]	900, 1600, 2200	N/A	1,056	1,325	1,152	1,260
TDS (mg/L)	Varies	500, 1000, 1500	N/A	660	810	659	728
Sulfate (mg/L)	Varies	250, 500, 600	N/A	--	--	36	40
Chloride (mg/L)	Varies	250, 500, 600	860 1-hr 230 4-day	133	183	189	192

1 Narrative chemical constituent objective of the Basin Plan. Procedures for establishing the applicable numeric limitation to implement the narrative objective can be found in the Policy for Application of Water Quality, Chapter IV, Section 8 of the Basin Plan. However, the Basin Plan does not require improvement over naturally occurring background concentrations. In cases where the natural background concentration of a particular constituent exceeds an applicable water quality objective, the natural background concentration will be considered to comply with the objective.

2 The Secondary MCLs are stated as a recommended level, upper level, and a short-term maximum level.

3 Maximum calendar annual average.

(1) **Chloride.** The Secondary MCL for chloride is 250 mg/L, as a recommended level, 500 mg/L as an upper level, and 600 mg/L as a short-term maximum.

(2) **Electrical Conductivity.** The Secondary MCL for EC is 900 µmhos/cm as a recommended level, 1600 µmhos/cm as an upper level, and 2200 µmhos/cm as a short-term maximum.

(3) **Sulfate.** The Secondary MCL for sulfate is 250 mg/L as a recommended level, 500 mg/L as an upper level, and 600 mg/L as a short-term maximum.

(4) **Total Dissolved Solids.** The Secondary MCL for TDS is 500 mg/L as a recommended level, 1000 mg/L as an upper level, and 1500 mg/L as a short-term maximum.

(b) **RPA Results**

(1) **Chloride**

City of Turlock RWQCF: The maximum observed annual average effluent chloride concentration was 133 mg/L. These levels do not exceed the Secondary MCL. Background concentrations in the Delta-Mendota Canal ranged from 120 mg/L to 130 mg/L, based on two samples collected in October 2014.

City of Modesto WQCF: The maximum observed annual average effluent chloride concentration was 189 mg/L. These levels do not exceed the Secondary MCL. Background concentrations in the Delta-Mendota Canal ranged from 120 mg/L to 130 mg/L, based on two samples collected in October 2014.

(2) **Electrical Conductivity**

City of Turlock RWQCF: The maximum observed annual average effluent electrical conductivity concentration was 1,056 mg/L. These levels exceed the Secondary MCL. Background concentrations in the Delta-Mendota Canal ranged from 570 mg/L to 670 mg/L, based on two samples collected in October 2014.

City of Modesto WQCF: The maximum observed annual average effluent electrical conductivity concentration was 1,152 mg/L. These levels exceed the Secondary MCL. Background concentrations in the Delta-Mendota Canal ranged from 570 mg/L to 670 mg/L, based on two samples collected in October 2014.

(3) **Sulfate**

City of Turlock RWQCF: Effluent monitoring data for sulfate is not available.

City of Modesto WQCF: The maximum observed annual average effluent sulfate concentration was 36 mg/L. These levels do not exceed the Secondary MCL. Background concentrations in the Delta-Mendota Canal ranged from 27 mg/L to 39 mg/L, based on two samples collected in October 2014.

(4) **Total Dissolved Solids**

City of Turlock RWQCF: The maximum observed annual average effluent total dissolved solids concentration was 660 mg/L. These exceed the Secondary MCL. Background concentrations in the Delta-Mendota Canal ranged from 350 mg/L to 390 mg/L, based on two samples collected in October 2014.

City of Modesto WQCF: The maximum observed annual average effluent total dissolved solids concentration was 659 mg/L. These exceed the Secondary MCL. Background concentrations in the Delta-Mendota Canal ranged from 350 mg/L to 390 mg/L, based on two samples collected in October 2014.

(c) **WQBEL's.** Effluent limitations based on the MCL or the Basin Plan would likely require construction and operation of a reverse osmosis treatment plant. The State Water Board, in Water Quality Order 2005-005 (for the City of Manteca), states, "*…the State Board takes official notice [pursuant to Title 23 of California Code of Regulations, Section 648.2] of the fact that operation of a large-scale reverse osmosis treatment plant would result in*

production of highly saline brine for which an acceptable method of disposal would have to be developed. Consequently, any decision that would require use of reverse osmosis to treat the City's municipal wastewater effluent on a large scale should involve thorough consideration of the expected environmental effects." The State Water Board states in that Order, "*Although the ultimate solution to southern Delta salinity problems have not yet been determined, previous actions establish that the State Board intended for permit limitations to play a limited role with respect to achieving compliance with the EC water quality objectives in the southern Delta.*" The State Water Board goes on to say, "*Construction and operation of reverse osmosis facilities to treat discharges…prior to implementation of other measures to reduce the salt load in the southern Delta, would not be a reasonable approach*."

The Central Valley Water Board, with cooperation of the State Water Board, has begun the process to develop a new policy for the regulation of salinity in the Central Valley. In a statement issued at the 16 March 2006, Central Valley Water Board meeting, Board Member Dr. Karl Longley recommended that the Central Valley Water Board continue to exercise its authority to regulate discharges of salt to minimize salinity increases within the Central Valley. Dr. Longley stated, "*The process of developing new salinity control policies does not, therefore, mean that we should stop regulating salt discharges until a salinity Policy is developed. In the meantime, the Board should consider all possible interim approaches to continue controlling and regulating salts in a reasonable manner, and encourage all stakeholder groups that may be affected by the Regional Board's policy to actively participate in policy development.*"

Until the Central Valley Water Board completes development of a new salinity policy for the Central Valley, this Order includes a performance-based annual average effluent limitation of 1,250 µmhos/cm for electrical conductivity applicable to both facilities based on the effluent limitation in Order R5-2015-0027 for the City of Turlock RWQCF. In order to ensure that the Discharger will continue to control the discharge of salinity, this Order includes a requirement to develop and implement a salinity evaluation and minimization plan.

(d) **Plant Performance and Attainability**

City of Turlock RWQCF: Analysis of the effluent data shows that the maximum observed annual average effluent concentration of 1,056 µmhos/cm is below the applicable WQBEL. The Central Valley Water Board concludes, therefore, that immediate compliance with this effluent limitation is feasible.

City of Modesto WQCF: Analysis of the effluent data shows that the maximum observed annual average effluent concentration of 1,152 µmhos/cm is below the applicable WQBEL. The Central Valley Water Board concludes, therefore, that immediate compliance with this effluent limitation is feasible.

4. WQBEL Calculations

a. This Order includes WQBEL's for the City of Turlock RWQCF for aluminum, ammonia, bis (2-ethylhexyl) phthalate, BOD_5, chlorine residual,

chlorodibromomethane, diazinon and chlorpyrifos, dichlorobromomethane, electrical conductivity, nitrate plus nitrite, pH, total coliform organisms, and TSS. This Order includes WQBEL's for the City of Modesto WQCF for ammonia, BOD_5, diazinon and chlorpyrifos, electrical conductivity, nitrate plus nitrite, pH, total coliform organisms, and TSS. The general methodology for calculating WQBEL's based on the different criteria/objectives is described in subsections IV.C.4.b through e, below. See Attachment H for the WQBEL calculations.

b. **Effluent Concentration Allowance.** For each water quality criterion/objective, the ECA is calculated using the following steady-state mass balance equation from Section 1.4 of the SIP:

$$ECA = C + D(C - B) \quad \text{where } C>B, \text{ and}$$
$$ECA = C \quad \text{where } C \leq B$$

where:

ECA = effluent concentration allowance
D = dilution credit
C = the priority pollutant criterion/objective
B = the ambient background concentration.

According to the SIP, the ambient background concentration (B) in the equation above shall be the observed maximum with the exception that an ECA calculated from a priority pollutant criterion/objective that is intended to protect human health from carcinogenic effects shall use the arithmetic mean concentration of the ambient background samples. For ECA's based on MCL's, which implement the Basin Plan's chemical constituents objective and are applied as annual averages, an arithmetic mean is also used for B due to the long-term basis of the criteria.

c. **Basin Plan Objectives and MCL's.** Effluent limitations for pH are based on the Basin Plan objectives and applied directly as instantaneous minimum and maximum effluent limitations.

The effluent limitations for nitrate plus nitrite are based on the Primary MCL. The Primary MCL was applied directly as an AMEL, and an AWEL was calculated according to Section 1.4 of the SIP using a 98th percentile occurrence probability.

d. **Aquatic Toxicity Criteria.** WQBEL's based on acute and chronic aquatic toxicity criteria are calculated in accordance with Section 1.4 of the SIP. The ECA's are converted to equivalent long-term averages (i.e., LTA_{acute} and $LTA_{chronic}$) using statistical multipliers and the lowest LTA is used to calculate the AMEL and MDEL using additional statistical multipliers.

e. **Human Health Criteria.** WQBEL's based on human health criteria, are also calculated in accordance with Section 1.4 of the SIP. The AMEL is set equal to ECA and a statistical multiplier was used to calculate the MDEL.

$$AMEL = mult_{AMEL}\left[\min\left(\overbrace{M_A ECA_{acute}}^{LTA_{acute}}, M_C ECA_{chronic}\right)\right]$$

$$MDEL = mult_{MDEL}\left[\min\left(M_A ECA_{acute}, \underbrace{M_C ECA_{chronic}}_{LTA_{chronic}}\right)\right]$$

$$MDEL_{HH} = \left(\frac{mult_{MDEL}}{mult_{AMEL}}\right) AMEL_{HH}$$

where:

$mult_{AMEL}$ = statistical multiplier converting minimum LTA to AMEL
$mult_{MDEL}$ = statistical multiplier converting minimum LTA to MDEL
M_A = statistical multiplier converting acute ECA to LTA_{acute}
M_C = statistical multiplier converting chronic ECA to $LTA_{chronic}$

Summary of Water Quality-Based Effluent Limitations
Discharge Point 002

Table F-11. Summary of Water Quality-Based Effluent Limitations – City of Turlock RWQCF

Parameter	Units	Effluent Limitations[10]				
		Average Monthly	Average Weekly	Maximum Daily	Instantaneous Minimum	Instantaneous Maximum
Conventional Pollutants						
Biochemical Oxygen Demand (5-day @ 20°C)	mg/L	10	15	20	--	--
	lbs/day[1]	1,200	1,800	2,400	--	--
pH	standard units	--	--	--	6.5	8.5
Total Suspended Solids	mg/L	10	15	20	--	--
	lbs/day[1]	1,200	1,800	2,400	--	--
Priority Pollutants						
Mercury, Total Recoverable	lbs/year	0.82[9]	--	--	--	--
Bis (2-Ethylhexyl) Phthalate	µg/L	10	--	30	--	--
Chlorodibromomethane	µg/L	19	--	30	--	--
Dichlorobromomethane	µg/L	52	--	79	--	--
Non-Conventional Pollutants						
Aluminum, Total Recoverable	µg/L	330	710	--	--	--
Ammonia Nitrogen, Total (as N) (1 April – 30 September)	mg/L	0.85	1.5	--	--	--
	lbs/day[1]	100	180	--	--	--
Ammonia Nitrogen, Total (as N) (1 October – 31 March)	mg/L	1.6	2.8	--	--	--
	lbs/day[1]	190	330	--	--	--
Chlorine, Total Residual	mg/L	--	0.011[2]	0.019[3]	--	--
Chlorpyrifos	µg/L	[4]	--	[5]	--	--
Diazinon	µg/L	[4]	--	[5]	--	--
Electrical Conductivity @ 25°C	µmhos/cm	1,250[6]	--	--	--	--
Nitrate Plus Nitrite (as N)	mg/L	10	12	--	--	--
Total Coliform Organisms	MPN/100 mL	--	2.2[7]	23[8]	--	240

Parameter	Units	Effluent Limitations[10]				
		Average Monthly	Average Weekly	Maximum Daily	Instantaneous Minimum	Instantaneous Maximum

[1] Based on an average dry weather flow of 14.2 MGD.
[2] Applied as a 4-day average effluent limitation.
[3] Applied as a 1-hour average effluent limitation.
[4] Average Monthly Effluent Limitation

$$S_{AMEL} = \frac{C_{D\ M-AVG}}{0.079} + \frac{C_{D\ M-AVG}}{0.012} \leq 1.0$$

$C_{D\ M-AVG}$ = average monthly diazinon effluent concentration in µg/L.
$C_{C\ M-AVG}$ = average monthly chlorpyrifos effluent concentration in µg/L.

[5] Average Weekly Effluent Limitation

$$S_{AWEL} = \frac{C_{D\ W-AVG}}{0.14} + \frac{C_{C\ W-AVG}}{0.021} \leq 1.0$$

$C_{D\ W-AVG}$ = average weekly diazinon effluent concentration in µg/L.
$C_{C\ W-AVG}$ = average weekly chlorpyrifos effluent concentration in µg/L.

[6] Applied as an annual average effluent limitation.
[7] Applied as a 7-day median effluent limitation.
[8] Not to be exceeded more than once in any 30-day period.
[9] The effluent calendar year annual average total mercury load shall not exceed 0.82 pounds/year.
[10] Compliance with effluent limitations to be determined at monitoring location EFF-001A.

Table F-12. Summary of Water Quality-Based Effluent Limitations – City of Modesto WQCF

Parameter	Units	Effluent Limitations[8]				
		Average Monthly	Average Weekly	Maximum Daily	Instantaneous Minimum	Instantaneous Maximum
Conventional Pollutants						
Biochemical Oxygen Demand (5-day @ 20°C)	mg/L	10	15	20	--	--
	lbs/day[1]	1,200	1,900	2,500	--	--
pH	standard units	--	--	--	6.5	8.5
Total Suspended Solids	mg/L	10	15	20	--	--
	lbs/day[1]	1,200	1,900	2,500	--	--
Priority Pollutants						
Mercury, Total Recoverable	lbs/year	1.162[7]	--	--	--	--
Non-Conventional Pollutants						
Ammonia Nitrogen, Total (as N) (1 April – 30 September)	mg/L	0.85	1.5	--	--	--
	lbs/day[1]	100	190	--	--	--
Ammonia Nitrogen, Total (as N) (1 October – 31 March)	mg/L	1.6	2.8	--	--	--
	lbs/day[1]	200	350	--	--	--
Chlorpyrifos	µg/L	[2]	--	[3]	--	--
Diazinon	µg/L	[2]	--	[3]	--	--

Parameter	Units	Effluent Limitations[8]				
		Average Monthly	Average Weekly	Maximum Daily	Instantaneous Minimum	Instantaneous Maximum
Electrical Conductivity @ 25°C	µmhos/cm	1,250[4]	--	--	--	--
Nitrate Plus Nitrite (as N)	mg/L	10	19	--	--	--
Total Coliform Organisms	MPN/100 mL	--	2.2[5]	23[6]	--	240

1 Based on an average dry weather flow of 14.2 MGD.

2 Average Monthly Effluent Limitation

$$S_{AMEL} = \frac{C_{D\ M-AVG}}{0.079} + \frac{C_{D\ M-AVG}}{0.012} \leq 1.0$$

$C_{D\ M-AVG}$ = average monthly diazinon effluent concentration in µg/L.
$C_{C\ M-AVG}$ = average monthly chlorpyrifos effluent concentration in µg/L.

3 Average Weekly Effluent Limitation

$$S_{AWEL} = \frac{C_{D\ W-AVG}}{0.14} + \frac{C_{C\ W-AVG}}{0.021} \leq 1.0$$

$C_{D\ W-AVG}$ = average weekly diazinon effluent concentration in µg/L.
$C_{C\ W-AVG}$ = average weekly chlorpyrifos effluent concentration in µg/L.

4 Applied as an annual average effluent limitation.

5 Applied as a 7-day median effluent limitation.

6 Not to be exceeded more than once in any 30-day period.

7 The effluent calendar year annual average total mercury load shall not exceed 1.162 pounds/year.

8 Compliance with effluent limitations to be determined at monitoring location EFF-001B.

5. Whole Effluent Toxicity (WET)

For compliance with the Basin Plan's narrative toxicity objective, this Order requires the Discharger to conduct whole effluent toxicity testing for acute and chronic toxicity, as specified in the Monitoring and Reporting Program (Attachment E section V.). This Order also contains effluent limitations for acute toxicity and requires the Discharger to implement best management practices to investigate the causes of, and identify corrective actions to reduce or eliminate effluent toxicity.

a. **Acute Aquatic Toxicity.** The Basin Plan contains a narrative toxicity objective that states, "*All waters shall be maintained free of toxic substances in concentrations that produce detrimental physiological responses in human, plant, animal, or aquatic life.*" (Basin Plan at page III-8.00) The Basin Plan also states that, "*…effluent limits based upon acute biotoxicity tests of effluents will be prescribed where appropriate…*".

For priority pollutants, the SIP dictates the procedures for conducting the RPA. Acute toxicity is not a priority pollutant. Therefore, the Central Valley Water Board is not restricted to one particular RPA method. Acute whole effluent toxicity is not a priority pollutant. Therefore, due to the site-specific conditions of the discharge, the Central Valley Water Board has used professional judgment in determining the appropriate method for conducting the RPA. U.S. EPA's September 2010 NPDES Permit Writer's Manual, page 6-30, states, "*State implementation procedures might allow, or even require, a permit writer to determine reasonable potential through a qualitative assessment process without using available facility-specific effluent monitoring data or when such data are not available…A permitting authority might*

also determine that WQBEL's are required for specific pollutants for all facilities that exhibit certain operational or discharge characteristics (e.g., WQBEL's for pathogens in all permits for POTW's discharging to contact recreational waters)." The Facility is a POTW that treats domestic wastewater containing ammonia and other acutely toxic pollutants. Acute toxicity effluent limits are required to ensure compliance with the Basin Plan's narrative toxicity objective.

U.S. EPA Region 9 provided guidance for the development of acute toxicity effluent limitations in the absence of numeric water quality objectives for toxicity in its document titled "Guidance for NPDES Permit Issuance", dated February 1994. In section B.2. "Toxicity Requirements" (pgs. 14-15) it states that, "*In the absence of specific numeric water quality objectives for acute and chronic toxicity, the narrative criterion 'no toxics in toxic amounts' applies. Achievement of the narrative criterion, as applied herein, means that ambient waters shall not demonstrate for acute toxicity: 1) less than 90% survival, 50% of the time, based on the monthly median, or 2) less than 70% survival, 10% of the time, based on any monthly median. For chronic toxicity, ambient waters shall not demonstrate a test result of greater than 1 TUc.*" Accordingly, effluent limitations for acute toxicity have been included in this Order as follows:

Acute Toxicity. Survival of aquatic organisms in 96-hour bioassays of undiluted waste shall be no less than:

Minimum for any one bioassay ---------- 70%
Median for any three consecutive bioassays ---------- 90%

b. **Chronic Aquatic Toxicity.** The Basin Plan contains a narrative toxicity objective that states, "All waters shall be maintained free of toxic substances in concentrations that produce detrimental physiological responses in human, plant, animal, or aquatic life." (Basin Plan at page III-8.00.) Based on chronic WET testing, the discharges from the City of Turlock RWQCF and the City of Modesto WQCF have reasonable potential to cause or contribute to an in-stream excursion above the Basin Plan's narrative toxicity objective.

No dilution has been granted for the chronic condition. Therefore, chronic toxicity testing results exceeding 1 chronic toxicity unit (TUc) demonstrates the discharge has a reasonable potential to cause or contribute to an exceedance of the Basin Plan's narrative toxicity objective.

The Monitoring and Reporting Program of this Order requires separate quarterly chronic WET monitoring for the City of Turlock RWQCF and the City of Modesto WQCF when discharging to the North Valley Regional Recycled Water Program Joint Outfall for demonstration of compliance with the narrative toxicity objective. In addition to WET monitoring, the Special Provision in section VI.C.2.a of this Order includes a numeric toxicity monitoring trigger, requirements for accelerated monitoring, and requirements for TRE initiation if toxicity is demonstrated.

Numeric chronic WET effluent limitations have not been included in this Order. The SIP contains implementation gaps regarding the appropriate form and implementation of chronic toxicity limits. This has resulted in the petitioning of a NPDES permit in the Los Angeles Region[1] that contained numeric chronic toxicity

[1] In the Matter of the Review of Own Motion of Waste Discharge Requirements Order Nos. R4-2002-0121 [NPDES No. CA0054011] and R4-2002-0123 [NPDES NO. CA0055119] and Time Schedule Order Nos. R4-2002-0122 and R4-2002-0124 for Los Coyotes and Long Beach Wastewater Reclamation Plants Issued by

effluent limitations. To address the petition, the State Water Board adopted WQO 2003-012 directing its staff to revise the toxicity control provisions in the SIP. The State Water Board states the following in WQO 2003-012, "*In reviewing this petition and receiving comments from numerous interested persons on the propriety of including numeric effluent limitations for chronic toxicity in NPDES permits for publicly-owned treatment works that discharge to inland waters, we have determined that this issue should be considered in a regulatory setting, in order to allow for full public discussion and deliberation. We intend to modify the SIP to specifically address the issue. We anticipate that review will occur within the next year. We therefore decline to make a determination here regarding the propriety of the final numeric effluent limitations for chronic toxicity contained in these permits."* The process to revise the SIP is currently underway. Proposed changes include clarifying the appropriate form of effluent toxicity limits in NPDES permits and general expansion and standardization of toxicity control implementation related to the NPDES permitting process. Since the toxicity control provisions in the SIP are under revision it is infeasible to develop numeric effluent limitations for chronic toxicity. Therefore, this Order requires that the Discharger meet best management practices for compliance with the Basin Plan's narrative toxicity objective, as allowed under 40 C.F.R. section 122.44(k).

To ensure compliance with the Basin Plan's narrative toxicity objective, the Discharger is required to conduct chronic WET testing, as specified in the Monitoring and Reporting Program (Attachment E section V.). Furthermore, the Special Provision contained at VI.C.2.a. of this Order requires the Discharger to investigate the causes of, and identify and implement corrective actions to reduce or eliminate effluent toxicity. If the discharge demonstrates toxicity exceeding the numeric toxicity monitoring trigger, the Discharger is required to initiate a TRE in accordance with an approved TRE workplan. The numeric toxicity monitoring trigger is not an effluent limitation; it is the toxicity threshold at which the Discharger is required to perform accelerated chronic toxicity monitoring, as well as, the threshold to initiate a TRE if effluent toxicity has been demonstrated. The City of Modesto and City of Turlock have submitted initial investigative TRE workplans. [1] If a TRE is triggered the Discharger must develop and submit a full TRE Workplan for approval by the Executive Officer within 60 days of notification by the laboratory the discharge exceeded the toxicity trigger during accelerated monitoring.

D. Final Effluent Limitation Considerations

1. Mass-based Effluent Limitations

40 C.F.R section 122.45(f)(1) requires effluent limitations be expressed in terms of mass, with some exceptions, and 40 C.F.R. section 122.45(f)(2) allows pollutants that are limited in terms of mass to additionally be limited in terms of other units of measurement. This Order includes effluent limitations expressed in terms of mass and concentration. In addition, pursuant to the exceptions to mass limitations provided in 40 CF.R. section 122.45(f)(1), some effluent limitations are not expressed in terms of mass, such as pH and temperature, and when the applicable standards are expressed in

---

the California Regional Water Quality Control Board, Los Angeles Region SWRCB/OCC FILES A-1496 AND 1496(a)

[1] City of Turlock RWQCF, 3 November 2015
City of Modesto WQCF, 12 September 2008

terms of concentration (e.g., CTR criteria and MCL's) and mass limitations are not necessary to protect the beneficial uses of the receiving water.

Mass-based effluent limitations have been established in this Order for ammonia, BOD_5, and TSS because they are oxygen demanding substances. Except for the pollutants listed above, mass-based effluent limitations are not included in this Order for pollutant parameters for which effluent limitations are based on water quality objectives and criteria that are concentration-based.

Mass-based effluent limitations were calculated based upon the average dry weather flows permitted in sections IV.A.1.h (City of Turlock RWQCF) and IV.A.2.g (City of Modesto WQCF) of this Order.

2. Averaging Periods for Effluent Limitations

40 C.F.R. section 122.45(d) requires AWEL's and AMEL's for POTW's unless impracticable. For BOD_5, chlorine residual, pH, and TSS, AWEL's have been replaced or supplemented with effluent limitations utilizing shorter averaging periods. The rationale for using shorter averaging periods for these constituents is discussed in section IV.C.3 of this Fact Sheet.

3. Satisfaction of Anti-Backsliding Requirements

The CWA specifies that a revised permit may not include effluent limitations that are less stringent than the previous permit unless a less stringent limitation is justified based on exceptions to the anti-backsliding provisions contained in CWA sections 402(o) or 303(d)(4), or, where applicable, 40 C.F.R. section 122.44(l).

Anti-backsliding requirements are not applicable as this is a new permit for discharges to the Delta-Mendota Canal from the City of Turlock RWQCF and City of Modesto WQCF.

4. Antidegradation Policies

The City of Turlock and the City of Modesto have requested authorization to discharge up to an average dry weather flow of 52.7 MGD at project build-out (25.4 MGD from the City of Turlock RWQCF and 27.3 MGD from the City of Modesto WQCF) as part of the NVRRWP. The NVRRWP developed a June 2015 *Antidegradation Analysis for Proposed Recycled Water Discharge to the Delta-Mendota Canal* (Larry Walker Associates), that provides an antidegradation analysis following the guidance provided by State Water Board APU 90-004. The NVRRWP submitted an October 2015 *Addendum No. 1 to Antidegradation Analysis for Proposed Recycled Water Discharge to the Delta-Mendota Canal: Socioeconomic Impact Assessment of UV Disinfection Implementation at City of Turlock Regional Water Quality Control Facility* (Larry Walker Associates) and a November 2015 *Addendum No. 2 to Antidegradation Analysis for Proposed Recycled Water Discharge to the Delta-Mendota Canal: Updated Estimate of Far-Field Nitrate Plus Nitrite Water Quality Impacts* (Larry Walker Associates). Pursuant to the guidelines, the Antidegradation Analysis evaluated whether changes in water quality resulting from the proposed new discharge to the Delta-Mendota Canal of up to 52.7 MGD of tertiary treated wastewater are consistent with the maximum benefit to the people of the State, will not unreasonably affect beneficial uses, will not cause water quality to be less than water quality objectives, and that the discharge provides protection for existing in-stream uses and water quality necessary to protect those uses. Findings from the Antidegradation Analysis are summarized below.

a. **Water quality parameters and beneficial uses which will be affected by the proposed expansion and the extent of the impact.** Compliance with this Order will not adversely impact beneficial uses of the receiving water or downstream

receiving waters. All beneficial uses will be maintained and protected. 40 C.F.R. section 131.12 defines the following tier designations to describe water quality in the receiving water body.

Tier 1 Designation: Existing instream water uses and the level of water quality necessary to protect the existing uses shall be maintained and protected. (40 C.F.R. §131.12)

Tier 2 Designation: Where the quality of waters exceed levels necessary to support propagation of fish, shellfish, and wildlife and recreation in and on the water, that quality shall be maintained and protected unless the State finds, after full satisfaction of the intergovernmental coordination and public participation provisions of the State's continuing planning process, that allowing lower water quality is necessary to accommodate important economic or social development in the area in which the waters are located. In allowing such degradation or lower water quality, the State shall assure water quality adequate to protect existing uses fully. Further, the State shall assure that there shall be achieved the highest statutory and regulatory requirements for all new and existing point sources and all cost-effective and reasonable best management practices for nonpoint source control. (40 C.F.R. §131.12)

The tier designation is assigned on a pollutant-by-pollutant basis. The Antidegradation Analysis did not delineate the tier designation for pollutants, but instead conducted an analysis of the potential impact of each constituent and their use of assimilative capacity. The Delta-Mendota Canal is not identified on the 2012 303(d) list as impaired. Therefore, the Delta Mendota Canal is considered a Tier 2 receiving water for all pollutants considered.

In the Antidegradation Analysis, the NVRRWP evaluated the near-field and far-field impacts of the new discharge of up to 52.7 MGD. Based on the NVRRWP's near-field analysis, the proposed new discharge would result in an increase in minor increases in concentration, compared with the current condition (i.e., no discharges to the Delta-Mendota Canal) for electrical conductivity, total dissolved solids, aluminum, copper, and nitrate and would not result in an exceedance of applicable water quality objectives in the downstream receiving water. The proposed new discharge would result in minor increases in mass loading for total dissolved solids, aluminum, copper, iron, manganese, mercury, selenium, and nitrate; however, because the DPWD will typically operate its diversion rates to match the proposed project's discharge rates, DPWD will remove a significant amount of mass from the Delta-Mendota Canal when it provides agricultural supply water to farmers and wetlands supply water to refuges.

In the far-field analysis, the NVRRWP estimated that, during periods when DPWD does not divert any water from the Delta-Mendota Canal, the proposed discharge would constitute no more than 1.95% of the water available for export from the O'Neill Forebay to the California Aqueduct, and no more than 2.27% of the water available for export from the San Luis Reservoir to the Santa Clara Tunnel, on an annual basis at the proposed buildout discharge rate of 52.7 MGD. The maximum percentage of the NVRRWP discharge available for export at these two location decreases to approximately 1.8% when considering average monthly contributions. Thus, the proposed project is expected to have minor water quality impacts on water resources downstream of the San Luis Joint-Use Complex.

As discussed in section IV.C.2.c of this Fact Sheet, this Order allows dilution credits and allocates all of the available assimilative capacity for dichlorobromomethane

and a significant portion of the available assimilative capacity for chlorodibromomethane, both disinfection by-products, for discharges from the City of Turlock RWQCF. As discussed in the Antidegradation Analysis Addendum No. 1, the discharge from the City of Turlock RWQCF will result in significant increases in the downstream concentration of these constituents.

As discussed below, the Antidegradation Analysis and the Antidegradation Analysis Addendum No. 1 evaluated whether allowance of an increase in constituent concentrations in this Order will result in the best practicable treatment or control of the discharge necessary to assure a pollution or nuisance will not occur and the highest water quality consistent with maximum benefit to the people of the State will be maintained.

b. **Scientific Rationale for Determining Potential Lowering of Water Quality.** The rationale used in the Antidegradation Analysis is based on 40 C.F.R. section 131.12, U.S. EPA memorandum Regarding Tier 2 Antidegradation Reviews and Significance Thresholds (U.S. EPA 2005), U.S. EPA Region 9 Guidance on Implementing the Antidegradation Provisions of 40 C.F.R. section 131.12 (U.S. EPA 1987), State Water Board Resolution No. 68-16, a State Water Board 1987 policy memorandum to the Regional Water Boards, and an Administrative Procedures Update (APU 90-004) issued by the State Water Board to the Regional Water Boards.

The scientific rationale used in the Antidegradation Analysis to determine if the Order allows a lowering of water quality was based on a comparison of the incremental change in concentration and mass loadings to the Delta-Mendota Canal under the current condition with loadings from the new discharges. The Antidegradation Analysis analyzed each pollutant with effluent limitations in Order R5-2015-0027 for the City of Turlock RWQCF, Order R5-2012-0031 for the City of Modesto WQCF, listed on the 2012 303(d) list for downstream receiving waters, and with applicable water quality objectives or TMDL WLA's to determine if the proposed new discharge of up to 52.7 MGD authorized by this Order potentially allows significant increase of the amount of pollutants present in the upstream and downstream receiving water influenced by the proposed discharge. Pollutants that significantly increase concentration or mass downstream require an alternatives analysis to determine whether implementation of alternatives to the proposed action is in the best socioeconomic interest of the people of the region, and to the maximum benefit of the people of the State. Details on the scientific rationale are discussed in detail in the Antidegradation Analysis.

The Central Valley Water Board concurs with this scientific approach.

c. **Alternative Control Measures Considered.** Resolution 68-16 requires that degradation of water quality be consistent with maximum benefit to the people of the State. APU 90-004 identifies factors to be considered for regulatory actions "th*at, in the Regional Board's judgement* [sic], *will result in a significant increase in pollutant loadings*" (i.e., when a complete antidegradation analysis is required) when determining whether the discharge is necessary to accommodate social or economic development and is consistent with maximum public benefit. The Central Valley Water Board is exercising its judgment to require a complete antidegradation analysis and implementation of feasible alternative control measures which might reduce, eliminate, or compensate for negative impacts.

i. **Alternative Control Measures.** The Antidegradation Analysis Addendum No. 1 considered replacing the existing chlorine disinfection system with a UV

disinfection system at the City of Turlock RWQCF as an alternative that would reduce or eliminate the lowering of water quality resulting from the proposed new discharge. In order to avoid the need to use chlorine to disinfect elements of the treatment train upstream of the UV disinfection system, the City of Turlock would also need to cover the secondary clarifiers and all tertiary treatment facilities. UV disinfection of the City of Turlock RWQCF effluent is expected to reduce chlorodibromomethane and dichlorobromomethane concentrations to non-detect levels.

As discussed further in the Antidegradation Analysis Addendum No. 1, the NVRRWP evaluated both economic and non-economic factors for the UV disinfection alternative. A summary of costs associated with the UV disinfection alternative is shown in the following table. The estimated monthly and annual residential fee increases to cover the debt service and operation and maintenance of the UV disinfection system are $11.29 and $135.48, respectively, which constitutes a 26.3% increase over current rates. In addition to increased costs, UV disinfection would significantly increase the amount of energy used by the facility and increase the carbon footprint of the facility, in conflict with Assembly Bill 32, the California Global Warming Solutions Act of 2006, and Executive Order B-30-15. Based on comparison of economic and non-economic factors, the NVRRWP concluded that replacing the chlorine disinfection system with a UV disinfection system does not provide sufficient benefit to the people of the State of California to justify the economic impacts to the region.

Table F-13. Summary of Costs for Adding UV Disinfection System

Capital Cost[1]	Annualized Capital Cost[1,2]	Annual Operation and Maintenance (O&M) Cost[1]	Total Annual Cost[1,3]	Present Worth Value[1,4]
$26,000,000	$1,910,000	$1,650,000	$3,560,000	$48,400,000

[1] Construction cost estimates include direct and indirect costs. Direct costs include materials, labor, construction equipment required for installation, and subcontractor costs. Indirect costs include contractor general conditions, contractor overhead and profit, sales tax, and an estimating contingency.
[2] Annualized capital costs developed using a 20-year amortization period and a 4.0% interest rate.
[3] Total annual cost = annualized capital cost + annual O&M cost.
[4] Present worth value represents the capital cost plus the capitalized annual O&M cost based on a 20-year analysis period and a 4.0% interest rate.

d. **Socioeconomic Evaluation.** The objective of the socioeconomic analysis was to determine if the lowering of water quality in the Delta-Mendota Canal is in the maximum interest of the people of the State. For the socioeconomic evaluation, the Central Valley Water Board considered:

i. The social benefits and costs described in the Antidegradation Analysis Addendum No. 1.

ii. The magnitude of the change in water quality from existing conditions, the water quality impacts, and expected effects on beneficial uses of the Delta-Mendota Canal.

iii. The feasibility and effectiveness of reducing the lowering of water quality by implementing alternatives to lowering of Delta-Mendota Canal water quality.

iv. The economic costs for the UV disinfection alternative.

e. **Justification for Allowing Degradation.** The Antidegradation Analysis provided the following rationale to justify the proposed increase in discharge to the receiving water:

i. The proposed new discharge to the Delta-Mendota Canal will provide benefits such as a reduced need for growers to pump groundwater for the irrigation of their crops and an augmented water supply available to refuges for wetlands management. Substituting high quality surface water for low quality groundwater will allow greater flexibility in the types of crops that can be grown in the project area and will potentially enhance the yields of those crops. Reduced pumping of groundwater will also improve the quality of agricultural drainage, which has the potential to impact nearby surface waters, and mitigate land subsidence caused by over extraction of groundwater resources. The proposed project will help to reduce overall uncertainties in water supply that growers have historically experienced due to shortages in Central Valley Project deliveries. Providing a sufficient supply of high quality water for growers in the Del Puerto Water District service area will help to maintain the agricultural economy in the region, and avoid the conversion of agricultural lands to non-agricultural uses in the absence of such a supply.

ii. The new discharge will not adversely affect existing or probable beneficial uses of the Delta-Mendota Canal, nor will it cause water quality to fall below applicable water quality objectives.

iii. Although the increased discharge may produce small increases in concentration and mass loadings, the small decrease in water quality with respect to the constituents considered in the analysis is unlikely to affect beneficial uses of the Delta-Mendota Canal or downstream receiving waters.

The Central Valley Water Board concurs with the findings of the Antidegradation Analysis and Antidegradation Analysis Addendum No. 1 and finds that the discharge of up to 52.7 MGD is consistent with the antidegradation provisions of 40 C.F.R. section 131.12 and State Water Board Resolution No. 68-16. Compliance with these requirements will result in the best practicable treatment or control of the discharges from the City of Turlock RWQCF and the City of Modesto WQCF. The impact on existing water quality will be insignificant.

Although the discharge of up to 52.7 MGD is consistent with antidegradation requirements, as discussed in section IV.B.2.c and IV.C.2.c of this Fact Sheet, this Order limits the effluent flow from the City of Turlock RWQCF to an average dry weather flow of 14.2 MGD and the effluent flow from the City of Modesto WQCF to 14.9 MGD. As described in section II.E of this Fact Sheet, both the City of Turlock and the City of Modesto have plans to upgrade and expand their facilities as needed to accommodate growth in their service areas. At such time as increased flow limitations are required to reflect the upgraded and expanded facilities or upon demonstration that compliance with all effluent limitations can be achieved at higher effluent flows (i.e., disinfection by-products in the City of Turlock RWQCF discharge), this Order may be reopened to increase the flow limitations. Flow increases up to a combined flow of 52.7 MGD would not require an additional antidegradation analysis, with the exception of bis (2-ethylhexyl) phthalate, chlorodibromomethane, and dichlorobromomethane.

5. Stringency of Requirements for Individual Pollutants

This Order contains both technology-based effluent limitations and WQBEL's for individual pollutants. The technology-based effluent limitations consist of restrictions on flow and percent removal requirements for BOD_5 and TSS. Restrictions on these parameters are discussed in section IV.B.2 of this Fact Sheet. This Order's technology-based pollutant restrictions implement the minimum, applicable federal technology-based requirements. In addition, this Order contains effluent limitations more stringent than the minimum, federal technology-based requirements that are necessary to meet water quality standards.

WQBEL's have been derived to implement water quality objectives that protect beneficial uses. Both the beneficial uses and the water quality objectives have been approved pursuant to federal law and are the applicable federal water quality standards. To the extent that toxic pollutant WQBEL's were derived from the CTR, the CTR is the applicable standard pursuant to 40 C.F.R. section 131.38. The procedures for calculating the individual water quality-based effluent limitations for priority pollutants are based on the CTR implemented by the SIP, which was approved by U.S. EPA on 18 May, 2000. All beneficial uses and water quality objectives contained in the Basin Plan were approved under state law and submitted to and approved by U.S. EPA prior to 30 May 2000. Any water quality objectives and beneficial uses submitted to U.S. EPA prior to 30 May 2000, but not approved by U.S. EPA before that date, are nonetheless "applicable water quality standards for purposes of the CWA" pursuant to 40 C.F.R. section 131.21(c)(1). Collectively, this Order's restrictions on individual pollutants are no more stringent than required to implement the requirements of the CWA.

Summary of Final Effluent Limitations
Discharge Point 002

Table F-14. Summary of Final Effluent Limitations – City of Turlock RWQCF

Parameter	Units	Effluent Limitations[16]					Basis[1]
		Average Monthly	Average Weekly	Maximum Daily	Instantaneous Minimum	Instantaneous Maximum	
Average Dry Weather Flow	MGD	14.2[2]	--	--	--	--	[3]
Conventional Pollutants							
Biochemical Oxygen Demand (5-day @ 20°C)	mg/L	10	15	20	--	--	TTC
	lbs/day[4]	1,200	1,800	2,400	--	--	
	% Removal	85	--	--	--	--	CFR
pH	standard units	--	--	--	6.5	8.5	BP
Total Suspended Solids	mg/L	10	15	20	--	--	TTC
	lbs/day[4]	1,200	1,800	2,400	--	--	
	% Removal	85	--	--	--	--	CFR
Priority Pollutants							
Mercury, Total Recoverable	lbs/year	0.82[15]	--	--	--	--	PB
Bis (2-Ethylhexyl) Phthalate	µg/L	10	--	30	--	--	CTR
Chloro-dibromomethane	µg/L	19	--	30	--	--	CTR

Parameter	Units	Effluent Limitations[16]					Basis[1]
		Average Monthly	Average Weekly	Maximum Daily	Instantaneous Minimum	Instantaneous Maximum	
Dichloro-bromomethane	µg/L	52	--	79	--	--	CTR
Non-Conventional Pollutants							
Aluminum, Total Recoverable	µg/L	330	710	--	--	--	SEC MCL
Ammonia Nitrogen, Total (as N) (1 April – 30 September)	mg/L	0.85	1.5	--	--	--	NAWQC
	lbs/day[4]	100	180	--	--	--	
Ammonia Nitrogen, Total (as N) (1 October – 31 March)	mg/L	1.6	2.8	--	--	--	
	lbs/day[4]	190	330	--	--	--	
Chlorine, Total Residual	mg/L	--	0.011[5]	0.019[6]	--	--	NAWQC
Chlorpyrifos	µg/L	[7]	--	[8]	--	--	BP
Diazinon	µg/L	[7]	--	[8]	--	--	BP
Electrical Conductivity @ 25°C	µmhos/cm	1,250[9]	--	--	--	--	PB
Nitrate Plus Nitrite (as N)	mg/L	10	12	--	--	--	MCL
Total Coliform Organisms	MPN/100 mL	--	2.2[10]	23[11]	--	240	BP
Acute Toxicity	% Survival	70[12]/90[13]	--	--	--	--	BP
Chronic Toxicity	TUc	--	--	Narrative[14]	--	--	BP

Parameter	Units	Effluent Limitations[16]					Basis[1]
		Average Monthly	Average Weekly	Maximum Daily	Instantaneous Minimum	Instantaneous Maximum	

[1] TTC – Based on tertiary treatment capability. These effluent limitations reflect the capability of a properly operated tertiary treatment plant.
CFR – Based on secondary treatment standards contained in 40 CFR part 133.
CTR – Based on the California Toxics Rule.
SEC MCL – Based on the Secondary Maximum Contaminant Level.
MCL – Based on the Primary Maximum Contaminant Level.
NAWQC – Based on the National Ambient Water Quality Criteria.
BP – Based on water quality objectives contained in the Basin Plan.

[2] The average dry weather flow shall not exceed 14.2 MGD.

[3] Based on the effluent flow at which the City of Turlock RWQCF can consistently comply with all effluent limitations in this Order.

[4] Based on an average dry weather flow of 14.2 MGD.

[5] Applied as a 4-day average effluent limitation.

[6] Applied as a 1-hour average effluent limitation.

[7] Average Monthly Effluent Limitation

$$S_{AMEL} = \frac{C_{D\ M-AVG}}{0.079} + \frac{C_{D\ M-AVG}}{0.012} \leq 1.0$$

$C_{D\ M\text{-}AVG}$ = average monthly diazinon effluent concentration in µg/L.
$C_{C\ M\text{-}AVG}$ = average monthly chlorpyrifos effluent concentration in µg/L.

[8] Average Weekly Effluent Limitation

$$S_{AWEL} = \frac{C_{D\ W-AVG}}{0.14} + \frac{C_{C\ W-AVG}}{0.021} \leq 1.0$$

$C_{D\ W\text{-}AVG}$ = average weekly diazinon effluent concentration in µg/L.
$C_{C\ W\text{-}AVG}$ = average weekly chlorpyrifos effluent concentration in µg/L.

[9] Applied as an annual average effluent limitation.

[10] Applied as a 7-day median effluent limitation.

[11] Not to be exceeded more than once in any 30-day period.

[12] 70% minimum survival for any one bioassay.

[13] 90% median for any three consecutive bioassays.

[14] There shall be no chronic toxicity in the effluent discharge.

[15] The effluent calendar year annual average total mercury load shall not exceed 0.82 pounds/year.

[16] Compliance with effluent limitations to be determined at monitoring location EFF-001A.

Table F-15. Summary of Final Effluent Limitations – City of Modesto WQCF

Parameter	Units	Effluent Limitations[13]					Basis[1]
		Average Monthly	Average Weekly	Maximum Daily	Instantaneous Minimum	Instantaneous Maximum	
Average Dry Weather Flow	MGD	14.9[2]	--	--	--	--	DC
Priority Pollutants							
Mercury, Total Recoverable	lbs/year	1.162[12]	--	--	--	--	PB
Conventional Pollutants							
Biochemical Oxygen Demand (5-day @ 20°C)	mg/L	10	15	20	--	--	TTC
	lbs/day[3]	1,200	1,900	2,500	--	--	
	% Removal	85	--	--	--	--	CFR
pH	standard units	--	--	--	6.5	8.5	BP
Total Suspended Solids	mg/L	10	15	20	--	--	TTC
	lbs/day[3]	1,200	1,900	2,500	--	--	
	% Removal	85	--	--	--	--	CFR
Non-Conventional Pollutants							
Ammonia Nitrogen, Total (as N) (1 April – 30 September)	mg/L	0.85	1.5	--	--	--	NAWQC
	lbs/day[3]	100	190	--	--	--	
Ammonia Nitrogen, Total (as N) (1 October – 31 March)	mg/L	1.6	2.8	--	--	--	
	lbs/day[3]	200	350	--	--	--	
Chlorpyrifos	µg/L	[4]	--	[5]	--	--	BP
Diazinon	µg/L	[4]	--	[5]	--	--	BP
Electrical Conductivity @ 25°C	µmhos/cm	1,250[6]	--	--	--	--	PB
Nitrate Plus Nitrite (as N)	mg/L	10	19	--	--	--	MCL
Total Coliform Organisms	MPN/100 mL	--	2.2[7]	23[8]	--	240	BP
Acute Toxicity	% Survival	70[9]/90[10]	--	--	--	--	BP
Chronic Toxicity	TUc	--	--	Narrative[11]	--	--	BP

Parameter	Units	Effluent Limitations[13]					Basis[1]
		Average Monthly	Average Weekly	Maximum Daily	Instantaneous Minimum	Instantaneous Maximum	

[1] DC – Based on the design capacity of the facility.
TTC – Based on tertiary treatment capability. These effluent limitations reflect the capability of a properly operated tertiary treatment plant.
CFR – Based on secondary treatment standards contained in 40 CFR part 133.
CTR – Based on the California Toxics Rule.
SEC MCL – Based on the Secondary Maximum Contaminant Level.
MCL – Based on the Primary Maximum Contaminant Level.
NAWQC – Based on the National Ambient Water Quality Criteria.
BP – Based on water quality objectives contained in the Basin Plan.

[2] The average dry weather flow shall not exceed 14.9 MGD.

[3] Based on an average dry weather flow of 14.9 MGD.

[4] Average Monthly Effluent Limitation

$$S_{AMEL} = \frac{C_{D\ M-AVG}}{0.079} + \frac{C_{D\ M-AVG}}{0.012} \leq 1.0$$

$C_{D\ M-AVG}$ = average monthly diazinon effluent concentration in µg/L.
$C_{C\ M-AVG}$ = average monthly chlorpyrifos effluent concentration in µg/L.

[5] Average Weekly Effluent Limitation

$$S_{AWEL} = \frac{C_{D\ W-AVG}}{0.14} + \frac{C_{C\ W-AVG}}{0.021} \leq 1.0$$

$C_{D\ W-AVG}$ = average weekly diazinon effluent concentration in µg/L.
$C_{C\ W-AVG}$ = average weekly chlorpyrifos effluent concentration in µg/L.

[6] Applied as an annual average effluent limitation.

[7] Applied as a 7-day median effluent limitation.

[8] Not to be exceeded more than once in any 30-day period.

[9] 70% minimum survival for any one bioassay.

[10] 90% median for any three consecutive bioassays.

[11] There shall be no chronic toxicity in the effluent discharge.

[12] The effluent calendar year annual average total mercury load shall not exceed 1.162 pounds/year.

[13] Compliance with effluent limitations to be determined at monitoring location EFF-001B.

E. Interim Effluent Limitations – Not Applicable

F. Land Discharge Specifications – Not Applicable

G. Recycling Specifications – Not Applicable

V. RATIONALE FOR RECEIVING WATER LIMITATIONS

A. Surface Water

1. CWA section 303(a-c), requires states to adopt water quality standards, including criteria where they are necessary to protect beneficial uses. The Central Valley Water Board adopted water quality criteria as water quality objectives in the Basin Plan. The Basin Plan states that "[t]*he numerical and narrative water quality objectives define the least stringent standards that the Regional Water Board will apply to regional waters in order to protect the beneficial uses.*" The Basin Plan includes numeric and narrative water quality objectives for various beneficial uses and water bodies. This Order contains receiving surface water limitations based on the Basin Plan numerical and narrative water quality objectives for bacteria, biostimulatory substances, color, chemical constituents, dissolved oxygen, floating material, oil and grease, pH, pesticides,

radioactivity, suspended sediment, settleable substances, suspended material, tastes and odors, temperature, toxicity, and turbidity.

B. Groundwater – Not Applicable

VI. RATIONALE FOR PROVISIONS

A. Standard Provisions

Standard Provisions, which apply to all NPDES permits in accordance with 40 C.F.R. section 122.41, and additional conditions applicable to specified categories of permits in accordance with 40 C.F.R. section 122.42, are provided in Attachment D. The discharger must comply with all standard provisions and with those additional conditions that are applicable under section 122.42.

Sections 122.41(a)(1) and (b) through (n) of 40 C.F.R. establish conditions that apply to all state-issued NPDES permits. These conditions must be incorporated into the permits either expressly or by reference. If incorporated by reference, a specific citation to the regulations must be included in the Order. Section 123.25(a)(12) of 40 C.F.R. allows the state to omit or modify conditions to impose more stringent requirements. In accordance with 40 C.F.R. section 123.25, this Order omits federal conditions that address enforcement authority specified in 40 C.F.R. sections 122.41(j)(5) and (k)(2) because the enforcement authority under the Water Code is more stringent. In lieu of these conditions, this Order incorporates by reference Water Code section 13387(e).

B. Special Provisions

1. Reopener Provisions

a. **Mercury.** This provision allows the Central Valley Water Board to reopen this Order in the event mercury is found to be causing toxicity based on acute or chronic toxicity test results, or if a TMDL program is adopted. In addition, this Order may be reopened if the Central Valley Water Board determines that a mercury offset program is feasible for dischargers subject to NPDES permits.

b. **Whole Effluent Toxicity.** This Order requires the Discharger to investigate the causes of, and identify corrective actions to reduce or eliminate effluent toxicity through a TRE. This Order may be reopened to include a numeric chronic toxicity limitation, a new acute toxicity limitation, and/or a limitation for a specific toxicant identified in the TRE. Additionally, if a numeric chronic toxicity water quality objective is adopted by the State Water Board, this Order may be reopened to include a numeric chronic toxicity limitation based on that objective.

c. **Water Effects Ratio (WER) and Metal Translators.** A default WER of 1.0 has been used in this Order for calculating criteria for applicable inorganic constituents. In addition, default dissolved-to-total metal translators have been used to convert water quality objectives from dissolved to total recoverable. If the Discharger performs studies to determine site-specific WERs and/or site-specific dissolved-to-total metal translators, this Order may be reopened to modify the effluent limitations for the applicable inorganic constituents.

d. **Delta Nutrient Research Plan.** As part of its 2014 Delta Strategic Work Plan, the Central Valley Water Board is implementing the Delta Nutrient Research Plan to evaluate the need for nutrient objectives to protect beneficial uses of the Delta. If applicable nutrient objectives are adopted by the Central Valley Water Board this Order may be reopened to implement the objectives. More information regarding the Delta Nutrient Research Plan can be found on the Central Valley Water Board's

website
at: http://www.waterboards.ca.gov/centralvalley/water_issues/delta_water_quality/delta_nutrient_research_plan/index.shtml

e. **Ultraviolet Light (UV) Disinfection Operating Specifications.** UV system operating specifications are required to ensure that the UV system at the City of Modesto WQCF is operated to achieve the required pathogen removal. UV disinfection system specifications and monitoring and reporting requirements are required to ensure that adequate UV dosage is applied to the wastewater to inactivate pathogens (e.g., viruses) in the wastewater. UV dosage is dependent on several factors such as UV transmittance, UV power setting, wastewater turbidity, and wastewater flow through the UV disinfection system. The UV specifications in this Order are based on the National Water Research Institute (NWRI) and American Water Works Association Research Foundation (AWWRF) "*Ultraviolet Disinfection Guidelines for Drinking Water and Water Reuse"* first published in December 2000 and revised as a Third Edition dated August 2012 (NWRI Guidelines). If the City of Modesto conducts a site-specific UV engineering study that identifies site-specific UV operating specifications that will achieve the virus inactivation required by Title 22 for disinfected tertiary recycled water, this Order may be reopened to modify the UV specifications, in accordance with Reopener Provision VI.C.1.g.

f. **City of Turlock RWQCF Flow Increase.** As discussed in section II.E of this Fact Sheet, the City of Turlock is planning upgrades and expansions of the RWQCF that would increase the tertiary treatment capacity of the RWQCF up to 25.4 MGD at full build-out. As discussed in section IV.D.4, the NVRRWP has conducted an antidegradation analysis for the full build-out discharge. Therefore, upon completion of the upgrades and expansions of the City of Turlock RWQCF, this Order may be reopened to increase the effluent flow limitation up to 27.3 MGD and revise the mass-based effluent limitations based on the increased effluent flow limitation.

Additionally, although the current design capacity of the City of Turlock RWQCF is 20 MGD, this Order limits the effluent flow to 14.2 MGD, which represents the maximum effluent flow at which the facility can comply with all effluent limitations in this Order (see sections IV.B.2.c and IV.C.2.c of this Fact Sheet). If the City of Turlock submits information demonstrating that the discharge from the City of Turlock RWQCF can achieve compliance with all final effluent limitations at effluent flows greater than 14.2 MGD, this Order may be reopened to increase the effluent flow limitation up to the design capacity, revise effluent limitations based on updated dilution credits, and revise the mass-based effluent limitations based on the increased effluent flow limitation.

g. **City of Modesto WQCF Flow Increase.** As discussed in section II.E of this Fact Sheet, the City of Modesto is planning phased upgrades and expansions of the WQCF that would increase the tertiary treatment capacity of the WQCF up to 27.3 MGD at full build-out. As discussed in section IV.D.4, the NVRRWP has conducted an antidegradation analysis for the full build-out discharge. Therefore, upon completion of the phased upgrades and expansions of the City of Modesto WQCF, this Order may be reopened to increase the effluent flow limitation up to 27.3 MGD and revise the mass-based effluent limitations based on the increased effluent flow limitation.

h. **Dilution Credits.** As discussed in section IV.C.2.c of this Fact Sheet, the Mixing Zone Study demonstrated that a mixing zone and dilution credits are available for

human health constituents. The City of Modesto did not request dilution credits for any parameters; therefore, the effluent limitations for the City of Modesto WQCF must be achieved at the point of discharge. This Order allows for dilution credits for bis (2-ethylhexyl) phthalate, chlorodibromomethane, and dichlorobromomethane for the discharge from the City of Turlock RWQCF. If the City of Turlock or City of Modesto request dilution credits for additional human health parameters and provides information supporting dilution credits, including demonstration that assimilative capacity is available and that the dilution credits are consistent with the requirements and guidance in Basin Plan, SIP (for CTR constituents), and U.S. EPA guidance, this Order may be reopened to modify the effluent limitations for the additional parameters.

2. Special Studies and Additional Monitoring Requirements

a. **Chronic Whole Effluent Toxicity Requirements.** The Basin Plan contains a narrative toxicity objective that states, "*All waters shall be maintained free of toxic substances in concentrations that produce detrimental physiological responses in human, plant, animal, or aquatic life.*" (Basin Plan at page III-8.00.) The discharges have reasonable potential to cause or contribute to an in-stream excursion above of the Basin Plan's narrative toxicity objective.

The Monitoring and Reporting Program of this Order requires chronic WET monitoring for demonstration of compliance with the narrative toxicity objective. In addition to WET monitoring, this provision includes a numeric toxicity monitoring trigger, requirements for accelerated monitoring, and requirements for TRE initiation if toxicity is demonstrated.

Monitoring Trigger. A numeric toxicity monitoring trigger of **> 1** TUc (where TUc = 100/NOEC) is applied in the provision, because this Order does not allow any dilution for the chronic condition. Therefore, a TRE is triggered when the effluent exhibits toxicity at 100% effluent.

Accelerated Monitoring. The provision requires accelerated WET testing when a regular WET test result exceeds the monitoring trigger. The purpose of accelerated monitoring is to determine, in an expedient manner, whether there is toxicity before requiring the implementation of a TRE. Due to possible seasonality of the toxicity, the accelerated monitoring should be performed in a timely manner, preferably taking no more than 2 to 3 months to complete.

The provision requires accelerated monitoring consisting of four chronic toxicity tests in a six-week period (i.e., one test every two weeks) using the species that exhibited toxicity. Guidance regarding accelerated monitoring and TRE initiation is provided in the *Technical Support Document for Water Quality-based Toxics Control,* EPA/505/2-90-001, March 1991 (TSD). The TSD at page 118 states, "*EPA recommends if toxicity is repeatedly or periodically present at levels above effluent limits more than 20 percent of the time, a TRE should be required.*" Therefore, four accelerated monitoring tests are required in this provision. If no toxicity is demonstrated in the four accelerated tests, then it demonstrates that toxicity is not present at levels above the monitoring trigger more than 20 percent of the time (only 1 of 5 tests are toxic, including the initial test). However, notwithstanding the accelerated monitoring results, if there is adequate evidence of effluent toxicity (i.e. toxicity present exceeding the monitoring trigger more than 20 percent of the time), the Executive Officer may require that the Discharger initiate a TRE.

See the WET Accelerated Monitoring Flow Chart (Figure F-1), below, for further clarification of the accelerated monitoring requirements and for the decision points for determining the need for TRE initiation.

TRE Guidance. The Discharger is required to prepare a TRE Workplan in accordance with U.S. EPA guidance. Numerous guidance documents are available, as identified below:

i. *Toxicity Reduction Evaluation Guidance for Municipal Wastewater Treatment Plants*, EPA/833-B-99/002, August 1999.

ii. *Generalized Methodology for Conducting Industrial Toxicity Reduction Evaluations (TREs)*, EPA/600/2-88/070, April 1989.

iii. *Methods for Aquatic Toxicity Identification Evaluations: Phase I Toxicity Characterization Procedures, Second Edition*, EPA 600/6-91/003, February 1991.

iv. *Toxicity Identification Evaluation: Characterization of Chronically Toxic Effluents, Phase I*, EPA/600/6-91/005F, May 1992.

v. *Methods for Aquatic Toxicity Identification Evaluations: Phase II Toxicity Identification Procedures for Samples Exhibiting Acute and Chronic Toxicity, Second Edition*, EPA/600/R-92/080, September 1993.

vi. *Methods for Aquatic Toxicity Identification Evaluations: Phase III Toxicity Confirmation Procedures for Samples Exhibiting Acute and Chronic Toxicity, Second Edition*, EPA 600/R-92/081, September 1993.

vii. *Methods for Measuring the Acute Toxicity of Effluents and Receiving Waters to Freshwater and Marine Organisms, Fifth Edition*, EPA-821-R-02-012, October 2002.

viii. *Short-term Methods for Estimating the Chronic Toxicity of Effluents and Receiving Waters to Freshwater Organisms, Fourth Edition*, EPA-821-R-02-013, October 2002.

ix. *Technical Support Document for Water Quality-based Toxics Control*, EPA/505/2-90-001, March 1991.

Figure F-2
WET Accelerated Monitoring Flow Chart

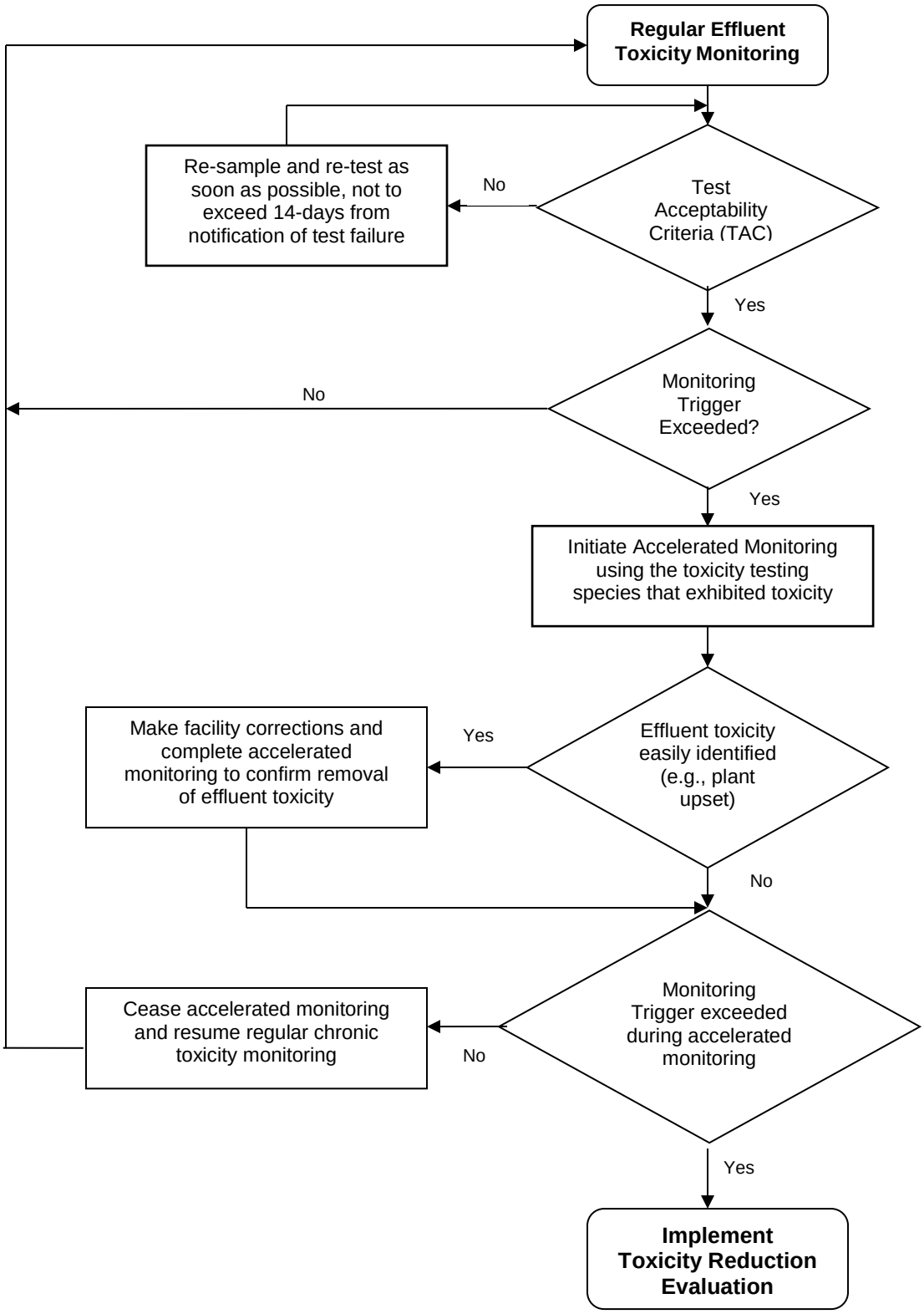

b. **Mixing Zone Validation Study.** The NVRRWP conducted a mixing zone study to determine the size of the mixing zones for human health constituents, and this Order allows a mixing zone and dilution credits for the City of Turlock RWQCF. This Order requires the City of Turlock to conduct a mixing zone validation study to verify the results of the mixing zone study.

3. Best Management Practices and Pollution Prevention

a. **Salinity Source Control Programs.** The City of Turlock and the City of Modesto are required to continue to implement salinity source control programs in this Order to ensure adequate measures are developed and implemented by the City of Turlock and the City of Modesto to reduce the discharge of salinity to the Delta-Mendota Canal.

b. **Bis (2-ethylhexyl) phthalate Pollutant Evaluation and Minimization Plan.** The City of Turlock shall develop and implement a pollutant evaluation and minimization plan (PEMP) for bis (2-ethylhexyl) phthalate. The PEMP shall be submitted to the Central Valley Water Board by **1 November 2016**. For the City of Turlock RWQCF, this Order allows a dilution credit for calculation of the water quality-based effluent limitations for bis (2-ethylhexyl) phthalate. A PEMP is required to ensure the City of Turlock is making adequate efforts to control and address sources of bis (2-ethylhexyl) phthalate within its collection system. The PEMP will provide Central Valley Water Board staff with the necessary data to continue to access the dilution credit allowed under this Order.

4. Construction, Operation, and Maintenance Specifications

a. **City of Modesto WQCF Phase 2 Discharge.** The City of Modesto has requested to be permitted to discharge up to 14.9 MGD to the Delta-Mendota Canal upon completion of the Phase 2 upgrade and expansion project. The permitted discharge to the Delta-Mendota Canal is subject to compliance with the conditions in Special Provision VI.C.4.a prior to initiation of discharges from the City of Modesto WQCF.

b. **Filtration System Operating Specifications for the City of Turlock RWQCF.** Turbidity is included as an operational specification as an indicator of the effectiveness of the filtration system for providing adequate disinfection. The tertiary treatment process utilized at this Facility is capable of reliably meeting a turbidity limitation of 2 NTU as a daily average. Failure of the treatment system such that virus removal is impaired would normally result in increased particles in the effluent, which result in higher effluent turbidity. Turbidity has a major advantage for monitoring filter performance, allowing immediate detection of filter failure and rapid corrective action. The operational specification requires that turbidity prior to disinfection shall not exceed 2 NTU as a daily average; 5 NTU, more than 5 percent of the time within a 24-hour period, and an instantaneous maximum of 10 NTU.

c. **Ultraviolet (UV) Disinfection System Operating Specifications for the City of Modesto WQCF.** This Order requires that wastewater shall be oxidized, coagulated, filtered, and adequately disinfected pursuant to the DDW reclamation criteria, CCR, Title 22, division 4, chapter 3, (Title 22), or equivalent. To ensure that the UV disinfection system is operated to achieve the required pathogen removal, this Order includes effluent limits for total coliform organisms, filtration system operating specifications, and UV disinfection system operating specifications. Compliance with total coliform effluent limits alone does not ensure that pathogens in the municipal wastewater have been deactivated by the UV disinfection system. Compliance with the effluent limits and the filtration system and UV disinfection

operating specifications demonstrates compliance with the equivalency to Title 22 disinfection requirement.

The NWRI guidelines include UV operating specifications for compliance with Title 22. For water recycling in accordance with Title 22, the UV system shall be an approved system included in the *Treatment Technology Report for Recycled Water*, December 2009 (or a later version, as applicable) published by the DDW. The UV system shall also conform to all requirements and operating specifications of the NWRI guidelines. A memorandum dated 1 November 2004 issued by DDW to Regional Water Board executive officers recommended that provisions be included in permits for water recycling treatment plants employing UV disinfection requiring dischargers to establish fixed cleaning frequency of lamp sleeves, as well as, include provisions that specify minimum delivered UV dose that must be maintained (per the NWRI Guidelines).

For membrane filtration, the NWRI Guidelines recommend a minimum hourly average UV dose of 80 mJ/cm^2. Therefore, this Order includes UV operating specifications requiring a minimum hourly average UV dose of 80 mJ/cm^2 and a minimum hourly average UV transmittance of 65%, per the NWRI Guidelines. If the City of Modesto conducts a site-specific UV engineering study that demonstrates a lower UV dose meets a Title 22 equivalent virus removal, this Order may be reopened to revise the UV operating specifications accordingly.

d. **Initiation of Surface Water Discharge.** The surface water discharge to the Delta-Mendota Canal from the Facilities is contingent upon approval by the Executive Officer in writing. The Discharger must demonstrate the effluent discharge will comply with the final effluent limitations and not cause violations of the receiving water limitations, the outfall pipeline has been constructed, and the Discharger must submit a request to the Central Valley Water Board to initiate the discharge.

5. Special Provisions for Municipal Facilities (POTW's Only) – Not Applicable

6. Other Special Provisions

a. **Title 22, or Equivalent, Disinfection Requirements.** This Order requires for both the City of Turlock RWQCF and City of Modesto WQCF, wastewater shall be oxidized, coagulated, filtered, and adequately disinfected pursuant to DDW reclamation criteria, CCR, Title 22, division 4, chapter 3 (Title 22), or equivalent. Title 22 is not directly applicable to surface waters; however, the Central Valley Water Board finds that it is appropriate to apply an equivalent level of treatment to that required by the DDW's reclamation criteria because the undiluted effluent may be used for the irrigation of food crops and/or for body-contact water recreation.

7. Compliance Schedules – Not Applicable

VII. RATIONALE FOR MONITORING AND REPORTING REQUIREMENTS

CWA section 308 and 40 C.F.R. sections 122.41(h), (j)-(l), 122.44(i), and 122.48 require that all NPDES permits specify monitoring and reporting requirements. Water Code sections 13267 and 13383 also authorize the Central Valley Water Board to establish monitoring, inspection, entry, reporting, and recordkeeping requirements. The Monitoring and Reporting Program (MRP), Attachment E of this Order establishes monitoring, reporting, and recordkeeping requirements that implement federal and state requirements. The following provides the rationale for the monitoring and reporting requirements contained in the MRP for the facilities.

A. Influent Monitoring

1. Influent monitoring is required to collect data on the characteristics of the wastewater and to assess compliance with effluent limitations (e.g., BOD_5 and TSS reduction requirements). Influent monitoring requirements for flow (continuous), BOD_5 (daily), and TSS (daily) have been established in this Order.

B. Effluent Monitoring

1. Pursuant to the requirements of 40 C.F.R. section 122.44(i)(2) effluent monitoring is required for all constituents with effluent limitations. Effluent monitoring is necessary to assess compliance with effluent limitations, assess the effectiveness of the treatment process, and to assess the impacts of the discharge on the receiving stream and groundwater.

2. **City of Turlock RWQCF – Monitoring Location EFF-001A**

   a. Effluent monitoring requirements for flow (continuous), BOD_5 (daily), pH (continuous), TSS (daily), bis (2-ethylhexyl) phthalate (monthly), chlorodibromomethane (monthly), dichlorobromomethane (monthly), aluminum (monthly), ammonia (weekly), chlorine residual (continuous), chlorpyrifos (annually), diazinon (annually), electrical conductivity (weekly), nitrate and nitrite (monthly), and total coliform organisms (daily) have been established in this Order to determine compliance with effluent limitations for these parameters.

   b. Continuous monitoring for turbidity has been established in this Order to determine compliance with the operation and maintenance requirements for the filtration system in Special Provision VI.C.4.b.

   c. Effluent monitoring requirements for dissolved oxygen (weekly) and temperature (weekly) have been established in this Order to characterize the effluent.

   d. Effluent monitoring requirements for hardness (monthly) have been established in this Order to adjust criteria for hardness-based metals.

   e. Effluent monitoring requirements for dechlorination agent (continuous) have been established in this Order to determine compliance with chlorine residual effluent limitations.

3. **City of Modesto WQCF – Monitoring Location EFF-001B**

   a. Effluent monitoring requirements for flow (continuous), BOD_5 (daily), pH (continuous), TSS (daily), ammonia (weekly), chlorpyrifos (annually), diazinon (annually), electrical conductivity (weekly), and nitrate and nitrite (monthly) have been established in this Order to determine compliance with effluent limitations for these parameters.

   b. Effluent monitoring requirements for dissolved oxygen (weekly) and temperature (weekly) have been established in this Order to characterize the effluent.

   c. Effluent monitoring requirements for hardness (monthly) have been established in this Order to adjust criteria for hardness-based metals.

4. **Monitoring Location EFF-002**

   a. Effluent monitoring requirements for pH, dissolved oxygen, temperature, and turbidity have been established in this Order in the North Valley Regional Recycled Water Joint Outfall immediately prior to discharge to the Delta-Mendota Canal. This monitoring is required to assist in evaluating the impact of the combined discharge in the receiving water for these parameters.

5. In accordance with Section 1.3 of the SIP, periodic monitoring is required for priority pollutants for which criteria or objectives apply and for which no effluent limitations have been established. This Order requires effluent monitoring for priority pollutants and other constituents of concern monthly during the year 2019. See section IX.B of the Monitoring and Reporting Program (Attachment E) for more detailed requirements related to performing priority pollutant monitoring.

6. Water Code section 13176, subdivision (a), states: "*The analysis of any material required by [Water Code sections 13000-16104] shall be performed by a laboratory that has accreditation or certification pursuant to Article 3 (commencing with Section 100825) of Chapter 4 of Part 1 of Division 101 of the Health and Safety Code.*" The DDW certifies laboratories through its Environmental Laboratory Accreditation Program (ELAP).

   Section 13176 cannot be interpreted in a manner that would violate federal holding time requirements that apply to NPDES permits pursuant to the CWA. (Wat. Code §§ 13370, subd. (c), 13372, 13377.) Section 13176 is inapplicable to NPDES permits to the extent it is inconsistent with CWA requirements. (Wat. Code § 13372, subd. (a).) The holding time requirements are 15 minutes for chlorine residual, dissolved oxygen, and pH, and immediate analysis is required for temperature. (40 C.F.R. § 136.3(e), Table II). The City of Turlock RWQCF and the City of Modesto WQCF maintain ELAP-certified laboratories on-site and conduct analysis for chlorine residual, dissolved oxygen, and pH within the required 15 minute hold times.

C. Whole Effluent Toxicity Testing Requirements

1. **Acute Toxicity.** Quarterly 96-hour bioassay testing is required to demonstrate compliance with the effluent limitations for acute toxicity.

2. **Chronic Toxicity.** Quarterly chronic whole effluent toxicity testing is required in order to demonstrate compliance with the Basin Plan's narrative toxicity objective.

D. Receiving Water Monitoring

1. Surface Water

a. Receiving water monitoring is necessary to assess compliance with receiving water limitations and to assess the impacts of the discharge on the receiving stream. This Order establishes weekly receiving water monitoring requirements for pH, dissolved oxygen, electrical conductivity, and turbidity. This Order establishes monthly receiving water monitoring requirements for hardness to properly adjust criteria for hardness-based metals.

E. Other Monitoring Requirements

1. **UV Disinfection System Monitoring for the City of Modesto WQCF**

   UV system monitoring and reporting are required to ensure that the UV system is operated to adequately inactivate pathogens in the wastewater. UV disinfection system monitoring is imposed to achieve equivalency to requirements established by the DDW), and the NWRI Guidelines

2. **Discharge Monitoring Report-Quality Assurance (DMR-QA) Study Program**

   Under the authority of section 308 of the CWA (33 U.S.C. § 1318), U.S. EPA requires major permittees under the NPDES Program to participate in the annual DMR-QA Study Program. The DMR-QA Study evaluates the analytical ability of laboratories that routinely perform or support self-monitoring analyses required by NPDES permits. There are two options to satisfy the requirements of the DMR-QA Study Program:
   (1) The Discharger can obtain and analyze a DMR-QA sample as part of the DMR-QA

Study; or (2) Per the waiver issued by U.S.EPA to the State Water Board, the Discharger can submit the results of the most recent Water Pollution Performance Evaluation Study from their own laboratories or their contract laboratories. A Water Pollution Performance Evaluation Study is similar to the DMR-QA Study. Thus, it also evaluates a laboratory's ability to analyze wastewater samples to produce quality data that ensure the integrity of the NPDES Program. The Discharger shall submit annually the results of the DMR-QA Study or the results of the most recent Water Pollution Performance Evaluation Study to the State Water Board. The State Water Board's Quality Assurance Program Officer will send the DMR-QA Study results or the results of the most recent Water Pollution Performance Evaluation Study to U.S. EPA's DMR-QA Coordinator and Quality Assurance Manager.

VIII. PUBLIC PARTICIPATION

The Central Valley Water Board has considered the issuance of WDR's that will serve as an NPDES permit for the City of Turlock RWQCF and the City of Modesto WQCF. As a step in the WDR adoption process, the Central Valley Water Board staff has developed tentative WDR's and has encouraged public participation in the WDR adoption process.

A. Notification of Interested Parties

The Central Valley Water Board notified the Discharger and interested agencies and persons of its intent to prescribe WDR's for the discharge and provided an opportunity to submit written comments and recommendations. Notification was provided through publication in the Turlock Daily Journal on 2 December 2015.

The public had access to the agenda and any changes in dates and locations through the Central Valley Water Board's website at:
http://www.waterboards.ca.gov/centralvalley/board_info/meetings/

B. Written Comments

Interested persons were invited to submit written comments concerning tentative WDR's as provided through the notification process. Comments were due either in person or by mail to the Executive Office at the Central Valley Water Board at the address on the cover page of this Order.

To be fully responded to by staff and considered by the Central Valley Water Board, the written comments were due at the Central Valley Water Board office **by 12:00 p.m. on 28 December 2015**.

C. Public Hearing

The Central Valley Water Board held a public hearing on the tentative WDR's during its regular Board meeting on the following date and time and at the following location:

Date:	18/19 February 2016
Time:	8:30 a.m.
Location:	Regional Water Quality Control Board, Central Valley Region 11020 Sun Center Dr., Suite #200 Rancho Cordova, CA 95670

Interested persons were invited to attend. At the public hearing, the Central Valley Water Board heard testimony pertinent to the discharge, WDR's, and permit. For accuracy of the record, important testimony was requested in writing.

D. Reconsideration of Waste Discharge Requirements

Any aggrieved person may petition the State Water Board to review the decision of the Central Valley Water Board regarding the final WDR's. The petition must be received by the State Water Board at the following address within 30 calendar days of the Central Valley Water Board's action:

State Water Resources Control Board
Office of Chief Counsel
P.O. Box 100, 1001 I Street
Sacramento, CA 95812-0100

For instructions on how to file a petition for review, see
http://www.waterboards.ca.gov/public_notices/petitions/water_quality/wqpetition_instr.shtml

E. Information and Copying

The Report of Waste Discharge, other supporting documents, and comments received are on file and may be inspected at the address above at any time between 8:30 a.m. and 4:45 p.m., Monday through Friday. Copying of documents may be arranged through the Central Valley Water Board by calling (916) 464-3291.

F. Register of Interested Persons

Any person interested in being placed on the mailing list for information regarding the WDR's and NPDES permit should contact the Central Valley Water Board, reference this facility, and provide a name, address, and phone number.

G. Additional Information

Requests for additional information or questions regarding this order should be directed to Tyson Pelkofer at (916) 464-4853.

ATTACHMENT G – SUMMARY OF REASONABLE POTENTIAL ANALYSIS

RPA FOR THE CITY OF TURLOCK RWQCF

Constituent	Units	MEC	B	C	CMC	CCC	Water & Org	Org. Only	Basin Plan	MCL	Reasonable Potential
Aluminum, Total Recoverable	µg/L	311[1]	99[1]	200	750[2]	--	--	--	--	200	Yes
Ammonia Nitrogen, Total (as N)	mg/L	4.4	0.077	0.70	3.20[2]	0.70[3]	--	--	--	--	Yes
Bis (2-ethylhexyl) Phthalate	µg/L	6.6	<0.1	1.8	--	--	1.8	5.9	--	4.0	Yes
Chlorodibromomethane	µg/L	14.5	<0.03	0.41	--	--	0.41	34	--	80[4]	Yes
Chlorpyrifos	µg/L	0.15 (DNQ)	<0.005	0.015	0.025	0.015	--	--	--	--	Yes[5]
Diazinon	µg/L	<0.02	<0.007	0.10	0.16	0.10	--	--	--	--	Yes[5]
Dichlorobromomethane	µg/L	41.9	<0.03	0.56	--	--	0.56	46	--	80[4]	Yes
Electrical Conductivity @ 25°C	µmhos/cm	1,056[1]	620[1]	900	--	--	--	--	--	900	Yes
Nitrate Nitrogen, Total (as N)	mg/L	21.5	0.46	10	--	--	10	--	--	10	Yes
Selenium, Total	µg/L	0.43J	0.72J	2	20	5	--	--	2	50	No
Total Dissolved Solids	mg/L	660[1]	370[1]	500	--	--	--	--	--	500	Yes
Mercury, Total Recoverable	µg/L	0.013	0.0013	0.050	--	--	0.050	0.051	--	2	Yes[5]

General Note: All inorganic concentrations are given as a total recoverable.
MEC = Maximum Effluent Concentration
B = Maximum Receiving Water Concentration or lowest detection level, if non-detect
C = Criterion used for Reasonable Potential Analysis
CMC = Criterion Maximum Concentration (CTR or NTR)
CCC = Criterion Continuous Concentration (CTR or NTR)
Water & Org = Human Health Criterion for Consumption of Water & Organisms (CTR or NTR)
Org. Only = Human Health Criterion for Consumption of Organisms Only (CTR or NTR)
Basin Plan = Numeric Site-specific Basin Plan Water Quality Objective
MCL = Drinking Water Standards Maximum Contaminant Level
NA = Not Available
ND = Non-detect

Footnotes:
(1) Represents the maximum observed average annual concentration for comparison with the Secondary MCL.
(2) U.S. EPA National Recommended Ambient Water Quality Criteria, Freshwater Aquatic Life Protection, 1-hour average.
(3) U.S. EPA National Recommended Ambient Water Quality Criteria, Freshwater Aquatic Life Protection, 30-day average.
(4) Represents the Primary MCL for total trihalomethanes, which includes bromoform, chlorodibromomethane, chloroform, and dichlorobromomethane.
(5) See section IV.C.3.a of the Fact Sheet (Attachment F) for a discussion of the RPA results.

RPA FOR THE CITY OF MODESTO WQCF

Constituent	Units	MEC	B	C	CMC	CCC	Water & Org	Org. Only	Basin Plan	MCL	Reasonable Potential
Ammonia Nitrogen, Total (as N)	mg/L	0.46	0.077	0.70	3.20[1]	0.70[2]	--	--	--	--	Yes[3]
Chlorpyrifos	µg/L	<0.0029	<0.005	0.015	0.025	0.015	--	--	--	--	Yes[3]
Diazinon	µg/L	<0.0036	<0.007	0.10	0.16	0.10	--	--	--	--	Yes[3]
Electrical Conductivity @ 25°C	µmhos/cm	1,152[4]	620[4]	900	--	--	--	--	--	900	Yes
Nitrate Nitrogen, Total (as N)	mg/L	6.87	0.46	10	--	--	--	--	--	10	Yes[3]
Total Dissolved Solids	mg/L	659[4]	370[4]	500	--	--	--	--	--	500	Yes
Selenium, Total	µg/L	0.89J	0.72J	2	20	5	--	--	2	50	No
Mercury, Total Recoverable	µg/L	0.0013	0.0013	0.050	--	--	0.050	0.051	--	2	Yes[5]

General Note: All inorganic concentrations are given as a total recoverable.
MEC = Maximum Effluent Concentration
B = Maximum Receiving Water Concentration or lowest detection level, if non-detect
C = Criterion used for Reasonable Potential Analysis
CMC = Criterion Maximum Concentration (CTR or NTR)
CCC = Criterion Continuous Concentration (CTR or NTR)
Water & Org = Human Health Criterion for Consumption of Water & Organisms (CTR or NTR)
Org. Only = Human Health Criterion for Consumption of Organisms Only (CTR or NTR)
Basin Plan = Numeric Site-specific Basin Plan Water Quality Objective
MCL = Drinking Water Standards Maximum Contaminant Level
NA = Not Available
ND = Non-detect

Footnotes:
(1) U.S. EPA National Recommended Ambient Water Quality Criteria, Freshwater Aquatic Life Protection, 1-hour average.
(2) U.S. EPA National Recommended Ambient Water Quality Criteria, Freshwater Aquatic Life Protection, 30-day average.
(3) See section IV.C.3.a of the Fact Sheet (Attachment F) for a discussion of the RPA results.
(4) Represents the maximum observed average annual concentration for comparison with the Secondary MCL.
(5) See section IV.C.3.a of the Fact Sheet (Attachment F) for a discussion of the RPA results.

ATTACHMENT H – CALCULATION OF WQBEL'S

Human Health WQBEL's Calculations									
Parameter	**Units**	**Criteria**	**Mean Background Concentration**	**Dilution Factor**	**MDEL/AMEL Multiplier**	**AMEL Multiplier**	**AMEL**	**MDEL**	**AWEL**
City of Turlock RWQCF									
Aluminum, Total Recoverable	µg/L	200	99	0	2.15	1.65	329[1]	--	708[1]
Bis (2-ethylhexyl) phthalate	µg/L	1.8	<0.1	5	2.90	2.42	10	30	--
Chlorodibromomethane	µg/L	0.41	<0.03	48	1.63	1.33	19	30	--
Dichlorobromomethane	µg/L	0.56	<0.03	97	1.52	1.28	52	79	--
Nitrate Plus Nitrite (as N)	mg/L	10	0.46[2]	0	1.22	1.12	10	--	12
City of Modesto WQCF									
Nitrate Plus Nitrite (as N)	mg/L	10	0.46[2]	0	2.38	1.82	10	--	19

[1] Calculated by setting the LTA equal to the Secondary MCL of 200 µg/L and using the AMEL multiplier to set the AMEL. The AWEL was calculated from the AMEL using the MDEL/AMEL multiplier. (Table 2 of the SIP)

[2] Maximum background concentration.

Aquatic Life WQBEL's Calculations															
Parameter	Units	Criteria		Dilution Factors		Aquatic Life Calculations							Final Effluent Limitations		
		CMC	CCC	CMC	CCC	ECA Multiplier$_{acute}$	LTA$_{acute}$	ECA Multiplier$_{chronic}$	LTA$_{chronic}$	AMEL Multiplier$_{95}$	AWEL Multiplier	MDEL Multiplier$_{99}$	AMEL[1]	AWEL[2]	MDEL[3]
Ammonia Nitrogen, Total (as N) (1 April – 30 September)	mg/L	3.20	0.70	0	0	0.32	1.0	0.78	0.55	1.55	2.68	3.11	0.85	1.5	--
Ammonia Nitrogen, Total (as N) (1 October – 31 March)	mg/L	3.20	1.38	0	0	0.32	1.0	0.78	1.1	1.55	2.68	3.11	1.6	2.8	--

1 Average Monthly Effluent Limitations are calculated according to Section 1.4 of the SIP using a 95th percentile occurrence probability.
2 Average Weekly Effluent Limitations are calculated according to Section 1.4 of the SIP using a 98th percentile occurrence probability.
3 Maximum Daily Effluent Limitations are calculated according to Section 1.4 of the SIP using a 99th percentile occurrence probability.