CALIFORNIA REGIONAL WATER QUALITY CONTROL BOARD
CENTRAL VALLEY REGION

11020 Sun Center Drive, #200 Rancho Cordova, California 95670-6114
Phone (916) 464-3291 Ÿ Fax (916) 464-4645
http://www.waterboards.ca.gov/centralvalley

ORDER R5-2014-0014
NPDES NO. CA0078093

WASTE DISCHARGE REQUIREMENTS FOR THE CALIFORNIA DEPARTMENT OF CORRECTIONS AND REHABILITATION DEUEL VOCATIONAL INSTITUTION SAN JOAQUIN COUNTY

The following Discharger is subject to waste discharge requirements (WDR's) set forth in this Order:

Table 1. Discharger Information

Discharger	California Department of Corrections and Rehabilitation
Name of Facility	Deuel Vocational Institution
Facility Address	23500 Kasson Road
	Tracy, CA 95376
	San Joaquin County

Table 2. Discharge Location

Discharge Point	Effluent Description	Discharge Point Latitude (North)	Discharge Point Longitude (West)	Receiving Water
001	Tertiary Treated Municipal Wastewater	37º 45' 02"	121º 19' 35"	Deuel Drain

Table 3. Administrative Information

This Order was adopted on:	**7 February 2014**
This Order shall become effective on:	**29 March 2014**
This Order shall expire on:	**1 March 2019**
The Discharger shall file a Report of Waste Discharge as an application for reissuance of WDR's in accordance with title 23, California Code of Regulations, and an application for reissuance of a National Pollutant Discharge Elimination System (NPDES) permit no later than:	**1 September 2018**
The U.S. Environmental Protection Agency (U.S. EPA) and the California Regional Water Quality Control Board, Central Valley Region have classified this discharge as follows:	**Minor**

I, **PAMELA C. CREEDON**, Executive Officer, do hereby certify that this Order with all attachments is a full, true, and correct copy of the Order adopted by the California Regional Water Quality Control Board, Central Valley Region, on 7 February 2014, and amended by Order R5-2014-0122 on 9 October 2014.

ORIGINAL SIGNED BY

PAMELA C. CREEDON, Executive Officer

CONTENTS

I. Facility Information 3
II. Findings 3
III. Discharge Prohibitions 4
IV. Effluent Limitations and Discharge Specifications 4
A. Effluent Limitations – Discharge Point 001 4
1. Final Effluent Limitations – Discharge Point 001 4
2. Interim Effluent Limitations – Discharge Point 001 6
B. Land Discharge Specifications – Not Applicable 6
C. Recycling Specifications – Not Applicable 6
V. Receiving Water Limitations 6
A. Surface Water Limitations 6
B. Groundwater Limitations 8
VI. Provisions 8
A. Standard Provisions 8
B. Monitoring and Reporting Program (MRP) Requirements 12
C. Special Provisions 12
1. Reopener Provisions 12
2. Special Studies, Technical Reports and Additional Monitoring Requirements 13
3. Best Management Practices and Pollution Prevention 15
4. Construction, Operation and Maintenance Specifications 16
5. Special Provisions for Municipal Facilities (POTWs Only) 16
6. Other Special Provisions 18
7. Compliance Schedules 19
VII. Compliance Determination 20

TABLES

Table 1. Discharger Information 1
Table 2. Discharge Location 1
Table 3. Administrative Information 1
Table 4. Effluent Limitations – Discharge Point 001 4

ATTACHMENTS

Attachment A – Definitions A-1
Attachment B – Map B-1
Attachment C – Flow Schematic C-1
Attachment D – Standard Provisions D-1
Attachment E – Monitoring and Reporting Program E-1
Attachment F – Fact Sheet F-1
Attachment G – Summary of Reasonable Potential Analysis for Constituents of Concern G-1
Attachment H – Calculation of WQBELS Monitoring Location EFF-001 ..... H-1

I. FACILITY INFORMATION

Information describing the California Department of Corrections and Rehabilitation, Deuel Vocational Institution (Facility) is summarized in Table 1 and in sections I and II of the Fact Sheet (Attachment F). Section I of the Fact Sheet also includes information regarding the Facility's permit application.

II. FINDINGS

The California Regional Water Quality Control Board, Central Valley Region (hereinafter Central Valley Water Board), finds:

A. Legal Authorities. This Order serves as WDR's pursuant to article 4, chapter 4, division 7 of the California Water Code (commencing with section 13260). This Order is also issued pursuant to section 402 of the federal Clean Water Act (CWA) and implementing regulations adopted by the U.S. EPA and chapter 5.5, division 7 of the Water Code (commencing with section 13370). It shall serve as an NPDES permit for point source discharges from this Facility to surface waters.

B. Background and Rationale for Requirements. The Central Valley Water Board developed the requirements in this Order based on information submitted as part of the application, through monitoring and reporting programs, and other available information. The Fact Sheet (Attachment F), which contains background information and rationale for the requirements in this Order, is hereby incorporated into and constitutes Findings for this Order. Attachments A through E and G through I are also incorporated into this Order.

C. Provisions and Requirements Implementing State Law. The provisions/requirements in subsections IV.B, IV.C, and V.B are included to implement State law only. These provisions/requirements are not required or authorized under the federal CWA; consequently, violations of these provisions/requirements are not subject to the enforcement remedies that are available for NPDES violations.

D. Monitoring and Reporting. 40 CFR 122.48 requires that all NPDES permits specify requirements for recording and reporting monitoring results. Water Code sections 13267 and 13383 authorize the Central Valley Water Board to require technical and monitoring reports. The Monitoring and Reporting Program establishes monitoring and reporting requirements to implement federal and State requirements. The Monitoring and Reporting Program is provided in Attachment E.

The technical and monitoring reports in this Order are required in accordance with Water Code section 13267, which states the following in subsection (b)(1), "*In conducting an investigation specified in subdivision (a), the regional board may require that any person who has discharged, discharges, or is suspected of having discharged discharging, or who proposes to discharge waste within its region, or any citizen or domiciary, or political agency or entity of this state who has discharged, discharges, or is suspected of having discharged or discharging, or who proposes to discharge, waste outside of its region could affect the quality of waters within its region shall furnish, under penalty of perjury, technical or monitoring program reports which the regional board requires. The burden, including costs, of these reports shall bear a reasonable relationship to the need for the report and the benefits to be obtained from the reports. In requiring those reports, the regional board shall provide the person with a written explanation with regard to the need for the reports, and shall identify the evidence that supports requiring that person to provide the reports*."

The Discharger owns and operates the Facility subject to this Order. The monitoring reports required by this Order are necessary to determine compliance with this Order. The need for the monitoring reports is discussed in the Fact Sheet.

E. Notification of Interested Parties. The Central Valley Water Board has notified the Discharger and interested agencies and persons of its intent to prescribe WDR's for the discharge and has provided them with an opportunity to submit their written comments and recommendations. Details of the notification are provided in the Fact Sheet.

F. Consideration of Public Comment. The Central Valley Water Board, in a public meeting, heard and considered all comments pertaining to the discharge. Details of the Public Hearing are provided in the Fact Sheet.

THEREFORE, IT IS HEREBY ORDERED that Order R5-2008-0164 is rescinded upon the effective date of this Order except for enforcement purposes, and, in order to meet the provisions contained in division 7 of the Water Code (commencing with section 13000) and regulations adopted thereunder, and the provisions of the CWA and regulations and guidelines adopted thereunder, the Discharger shall comply with the requirements in this Order. This action in no way prevents the Central Valley Water Board from taking enforcement action for past violations of the previous Order.

III. DISCHARGE PROHIBITIONS

A. Discharge of wastewater at a location or in a manner different from that described in this Order is prohibited.

B. The by-pass or overflow of wastes to surface waters is prohibited, except as allowed by Federal Standard Provisions I.G. and I.H. (Attachment D).

C. Neither the discharge nor its treatment shall create a nuisance as defined in section 13050 of the Water Code.

D. The Discharger shall not allow pollutant-free wastewater to be discharged into the treatment or disposal system in amounts that significantly diminish the system's capability to comply with this Order. Pollutant-free wastewater means rainfall, groundwater, cooling waters, and condensates that are essentially free of pollutants.

IV. EFFLUENT LIMITATIONS AND DISCHARGE SPECIFICATIONS

A. Effluent Limitations – Discharge Point 001

1. Final Effluent Limitations – Discharge Point 001

The Discharger shall maintain compliance with the following effluent limitations at Discharge Point 001, with compliance measured at Monitoring Location EFF-001 as described in the Monitoring and Reporting Program, Attachment E:

a. The Discharger shall maintain compliance with the effluent limitations specified in Table 4:

Table 4. Effluent Limitations – Discharge Point 001

Parameter	Units	Effluent Limitations				
		Average Monthly	Average Weekly	Maximum Daily	Instantaneous Minimum	Instantaneous Maximum
Conventional Pollutants						
Biochemical Oxygen Demand (5-day @ 20°C)	mg/L	10	15	20	--	--
	lbs/day[1]	52	78	103	--	--

Parameter	Units	Effluent Limitations				
		Average Monthly	Average Weekly	Maximum Daily	Instantaneous Minimum	Instantaneous Maximum
pH	standard units	--	--	--	6.5	8.5
Total Suspended Solids	mg/L	10	15	20	--	--
	lbs/day[1]	52	78	103	--	--
Priority Pollutants						
Copper, Total Recoverable	µg/L	25	--	10	--	--
Cyanide, Total (as CN)	µg/L	4.3	--	8.5	--	--
Non-Conventional Pollutants						
Ammonia Nitrogen, Total (as N)	mg/L	0.7	--	2.2	--	--
	lbs/day[1]	3.6	--	11.4	--	--
Nitrite Nitrogen, Total (as N)	mg/L	1.0	--	--	--	--
Nitrate plus Nitrite (as N)	mg/L	10	--	--	--	--

[1] Based on an average dry weather flow of 0.62 MGD.

b. **Percent Removal**: The average monthly percent removal of 5-day biochemical oxygen demand (BOD_5) and total suspended solids (TSS) shall not be less than 85 percent.

c. **Acute Whole Effluent Toxicity**. Survival of aquatic organisms in 96-hour bioassays of undiluted waste shall be no less than:

   i. 70%, minimum for any one bioassay; and

   ii. 90%, median for any three consecutive bioassays.

d. **Temperature.** The maximum temperature of the discharge shall not exceed the natural receiving water temperature by more than 20°F.

e. **Chronic Whole Effluent Toxicity**. There shall be no chronic toxicity in the effluent discharge.

f. **Total Coliform Organisms.** Effluent total coliform organisms shall not exceed:

   i. 2.2 most probable number (MPN) per 100 mL, as a 7-day median;
   ii. 23 MPN/100 mL, more than once in any 30-day period; and
   iii. 240 MPN/100 mL, at any time.

g. **Diazinon and Chlorpyrifos.** Effluent diazinon and chlorpyrifos concentrations shall not exceed the sum of one (1.0) as identified below:

i. **Average Monthly Effluent Limitation**

$$S_{AMEL} = \frac{C_{D\ AVG}}{0.079} + \frac{C_{C\ AVG}}{0.012} \leq 1.0$$

$C_{D\text{-}avg}$ = average monthly diazinon effluent concentration in µg/L.
$C_{C\text{-}avg}$ = average monthly chlorpyrifos effluent concentration in µg/L.

ii. **Maximum Daily Effluent Limitation**

$$S_{MDEL} = \frac{C_{D\ MAX}}{0.16} + \frac{C_{C\ MAX}}{0.025} \leq 1.0$$

$C_{D\text{-}max}$ = maximum daily diazinon effluent concentration in µg/L.
$C_{C\text{-}max}$ = maximum daily chlorpyrifos effluent concentration in µg/L.

h. **Average Dry Weather Flow**. The average dry weather flow shall not exceed 0.62 MGD.

i. **Methylmercury.** The effluent calendar annual methylmercury load shall not exceed 0.021 grams, in accordance with the Delta Mercury Control Program.

2. Interim Effluent Limitations – Discharge Point 001

The Discharger shall maintain compliance with the following interim effluent limitation at Discharge Point 001, with compliance measured at Monitoring Location EFF-001 as described in the Monitoring and Reporting Program, Attachment E:

a. **Mercury total. Effective immediately and until 30 December 2030**, the effluent calendar year annual total mercury load shall not exceed 10.6 grams/year. This interim effluent limitation shall apply in lieu of the final effluent limitation for methylmercury (Section IV.A.1.i).

B. Land Discharge Specifications – Not Applicable

C. Recycling Specifications – Not Applicable

V. RECEIVING WATER LIMITATIONS

A. Surface Water Limitations

The discharge shall not cause the following in Deuel Drain:

1. **Bacteria**. The fecal coliform concentration, based on a minimum of not less than five samples for any 30-day period, to exceed a geometric mean of 200 MPN/100 mL, nor more than 10 percent of the total number of fecal coliform samples taken during any 30-day period to exceed 400 MPN/100 mL.

2. **Biostimulatory Substances**. Water to contain biostimulatory substances which promote aquatic growths in concentrations that cause nuisance or adversely affect beneficial uses.

3. **Chemical Constituents**. Chemical constituents to be present in concentrations that adversely affect beneficial uses.

4. **Color**. Discoloration that causes nuisance or adversely affects beneficial uses.

5. **Dissolved Oxygen**. The dissolved oxygen concentration to be reduced below 5.0 mg/L at any time.

6. **Floating Material**. Floating material to be present in amounts that cause nuisance or adversely affect beneficial uses.

7. **Oil and Grease**. Oils, greases, waxes, or other materials to be present in concentrations that cause nuisance, result in a visible film or coating on the surface of the water or on objects in the water, or otherwise adversely affect beneficial uses.

8. **pH**. The pH to be depressed below 6.5 nor raised above 8.5.

9. **Pesticides**:

    a. Pesticides to be present, individually or in combination, in concentrations that adversely affect beneficial uses;

    b. Pesticides to be present in bottom sediments or aquatic life in concentrations that adversely affect beneficial uses;

    c. Total identifiable persistent chlorinated hydrocarbon pesticides to be present in the water column at concentrations detectable within the accuracy of analytical methods approved by USEPA or the Executive Officer;

    d. Pesticide concentrations to exceed those allowable by applicable antidegradation policies (see State Water Board Resolution No. 68-16 and 40 CFR 131.12.);

    e. Pesticide concentrations to exceed the lowest levels technically and economically achievable;

    f. Pesticides to be present in concentration in excess of the maximum contaminant levels set forth in CCR, Title 22, division 4, chapter 15; nor

    g. Thiobencarb to be present in excess of 1.0 µg/L.

10. **Radioactivity**:

    a. Radionuclides to be present in concentrations that are harmful to human, plant, animal, or aquatic life nor that result in the accumulation of radionuclides in the food web to an extent that presents a hazard to human, plant, animal, or aquatic life.

    b. Radionuclides to be present in excess of the maximum contaminant levels (MCLs) specified in Table 64442 of section 64442 and Table 64443 of section 64443 of Title 22 of the California Code of Regulations.

11. **Suspended Sediments**. The suspended sediment load and suspended sediment discharge rate of surface waters to be altered in such a manner as to cause nuisance or adversely affect beneficial uses.

12. **Settleable Substances**. Substances to be present in concentrations that result in the deposition of material that causes nuisance or adversely affects beneficial uses.

13. **Suspended Material**. Suspended material to be present in concentrations that cause nuisance or adversely affect beneficial uses.

14. **Taste and Odors**. Taste- or odor-producing substances to be present in concentrations that impart undesirable tastes or odors to fish flesh or other edible products of aquatic origin, or that cause nuisance, or otherwise adversely affect beneficial uses.

15. **Temperature**. The discharge shall not cause the following in Deuel Drain:

    a. The creation of a zone, defined by water temperatures of more than 1ºF above natural receiving water temperature, which exceeds 25 percent of the cross-sectional area of the main river channel at any point.

b. A surface water temperature rise greater than 4ºF above the natural temperature of the receiving water at any time or place.

16. **Toxicity.** Toxic substances to be present, individually or in combination, in concentrations that produce detrimental physiological responses in human, plant, animal, or aquatic life.

17. **Turbidity**

a. Shall not exceed 2 Nephelometric Turbidity Units (NTU) where natural turbidity is less than 1 NTU;

b. Shall not increase more than 1 NTU where natural turbidity is between 1 and 5 NTUs;

c. Shall not increase more than 20 percent where natural turbidity is between 5 and 50 NTUs;

d. Shall not increase more than 10 NTU where natural turbidity is between 50 and 100 NTUs; nor

e. Shall not increase more than 10 percent where natural turbidity is greater than 100 NTUs.

B. Groundwater Limitations

Release of waste constituents from any storage, treatment, or disposal component associated with the wastewater treatment plant, in combination with other sources, shall not cause the following in the underlying groundwater:

1. Adversely impact beneficial uses or exceed water quality objectives.

2. Any constituent concentration, when compared with background, shall not be incrementally increased beyond the current concentration in down gradient wells.

VI. PROVISIONS

A. Standard Provisions

1. The Discharger shall comply with all Standard Provisions included in Attachment D.

2. The Discharger shall comply with the following provisions. In the event that there is any conflict, duplication, or overlap between provisions specified by this Order, the more stringent provision shall apply:

a. If the Discharger's wastewater treatment plant is publicly owned or subject to regulation by California Public Utilities Commission, it shall be supervised and operated by persons possessing certificates of appropriate grade according to Title 23, CCR, division 3, chapter 26.

b. After notice and opportunity for a hearing, this Order may be terminated or modified for cause, including, but not limited to:

i. violation of any term or condition contained in this Order;

ii. obtaining this Order by misrepresentation or by failing to disclose fully all relevant facts;

iii. a change in any condition that requires either a temporary or permanent reduction or elimination of the authorized discharge; and

iv. a material change in the character, location, or volume of discharge.

The causes for modification include:

- *New regulations*. New regulations have been promulgated under section 405(d) of the CWA, or the standards or regulations on which the permit was based have been changed by promulgation of amended standards or regulations or by judicial decision after the permit was issued.
- *Land application plans*. When required by a permit condition to incorporate a land application plan for beneficial reuse of sewage sludge, to revise an existing land application plan, or to add a land application plan.
- *Change in sludge use or disposal practice*. Under 40 CFR 122.62(a)(1), a change in the Discharger's sludge use or disposal practice is a cause for modification of the permit. It is cause for revocation and reissuance if the Discharger requests or agrees.

The Central Valley Water Board may review and revise this Order at any time upon application of any affected person or the Central Valley Water Board's own motion.

c. If a toxic effluent standard or prohibition (including any scheduled compliance specified in such effluent standard or prohibition) is established under section 307(a) of the CWA, or amendments thereto, for a toxic pollutant that is present in the discharge authorized herein, and such standard or prohibition is more stringent than any limitation upon such pollutant in this Order, the Central Valley Water Board will revise or modify this Order in accordance with such toxic effluent standard or prohibition.

   The Discharger shall comply with effluent standards and prohibitions within the time provided in the regulations that establish those standards or prohibitions, even if this Order has not yet been modified.

d. This Order shall be modified, or alternately revoked and reissued, to comply with any applicable effluent standard or limitation issued or approved under sections 301(b)(2)(C) and (D), 304(b)(2), and 307(a)(2) of the CWA, if the effluent standard or limitation so issued or approved:

   i. Contains different conditions or is otherwise more stringent than any effluent limitation in the Order; or

   ii. Controls any pollutant limited in the Order.

   The Order, as modified or reissued under this paragraph, shall also contain any other requirements of the CWA then applicable.

e. The provisions of this Order are severable. If any provision of this Order is found invalid, the remainder of this Order shall not be affected.

f. The Discharger shall take all reasonable steps to minimize any adverse effects to waters of the State or users of those waters resulting from any discharge or sludge use or disposal in violation of this Order. Reasonable steps shall include such accelerated or additional monitoring as necessary to determine the nature and impact of the non-complying discharge or sludge use or disposal.

g. The Discharger shall ensure compliance with any existing or future pretreatment standard promulgated by USEPA under section 307 of the CWA, or amendment thereto, for any discharge to the municipal system.

h. A copy of this Order shall be maintained at the discharge facility and be available at all times to operating personnel. Key operating personnel shall be familiar with its content.

i. Safeguard to electric power failure:

   i. The Discharger shall provide safeguards to assure that, should there be reduction, loss, or failure of electric power, the discharge shall comply with the terms and conditions of this Order.

   ii. Upon written request by the Central Valley Water Board, the Discharger shall submit a written description of safeguards. Such safeguards may include alternate power sources, standby generators, retention capacity, operating procedures, or other means. A description of the safeguards provided shall include an analysis of the frequency, duration, and impact of power failures experienced over the past 5 years on effluent quality and on the capability of the Discharger to comply with the terms and conditions of the Order. The adequacy of the safeguards is subject to the approval of the Central Valley Water Board.

   iii. Should the treatment works not include safeguards against reduction, loss, or failure of electric power, or should the Central Valley Water Board not approve the existing safeguards, the Discharger shall, within 90 days of having been advised in writing by the Central Valley Water Board that the existing safeguards are inadequate, provide to the Central Valley Water Board and USEPA a schedule of compliance for providing safeguards such that in the event of reduction, loss, or failure of electric power, the Discharger shall comply with the terms and conditions of this Order. The schedule of compliance shall, upon approval of the Central Valley Water Board, become a condition of this Order.

j. The Discharger, upon written request of the Central Valley Water Board, shall file with the Board a technical report on its preventive (failsafe) and contingency (cleanup) plans for controlling accidental discharges, and for minimizing the effect of such events. This report may be combined with that required under the Central Valley Water Board Standard Provision contained in section VI.A.2.i of this Order.

   The technical report shall:

   i. Identify the possible sources of spills, leaks, untreated waste by-pass, and contaminated drainage. Loading and storage areas, power outage, waste treatment unit outage, and failure of process equipment, tanks and pipes should be considered.

   ii. Evaluate the effectiveness of present facilities and procedures and state when they became operational.

   iii. Predict the effectiveness of the proposed facilities and procedures and provide an implementation schedule containing interim and final dates when they will be constructed, implemented, or operational.

   The Central Valley Water Board, after review of the technical report, may establish conditions which it deems necessary to control accidental discharges and to minimize the effects of such events. Such conditions shall be incorporated as part of this Order, upon notice to the Discharger.

k. A publicly owned treatment works whose waste flow has been increasing, or is projected to increase, shall estimate when flows will reach hydraulic and treatment capacities of its treatment and disposal facilities. The projections shall be made in January, based on the last 3 years' average dry weather flows, peak wet weather flows and total annual flows, as appropriate. When any projection shows that capacity of any part of the facilities may be exceeded in 4 years, the Discharger shall notify the Central Valley Water Board by 31 January. A copy of the notification shall be sent to appropriate local elected officials, local permitting agencies and the press. Within 120 days of the notification, the Discharger shall submit a technical report showing how it will prevent flow volumes from exceeding capacity or how it will increase capacity to handle the larger flows. The Central Valley Water Board may extend the time for submitting the report.

l. The Discharger shall submit technical reports as directed by the Executive Officer. All technical reports required herein that involve planning, investigation, evaluation, or design, or other work requiring interpretation and proper application of engineering or geologic sciences, shall be prepared by or under the direction of persons registered to practice in California pursuant to California Business and Professions Code, sections 6735, 7835, and 7835.1. To demonstrate compliance with Title 16, CCR, sections 415 and 3065, all technical reports must contain a statement of the qualifications of the responsible registered professional(s). As required by these laws, completed technical reports must bear the signature(s) and seal(s) of the registered professional(s) in a manner such that all work can be clearly attributed to the professional responsible for the work.

m. The Central Valley Water Board is authorized to enforce the terms of this permit under several provisions of the Water Code, including, but not limited to, sections 13385, 13386, and 13387.

n. For publicly owned treatment works, prior to making any change in the point of discharge, place of use, or purpose of use of treated wastewater that results in a permanent decrease of flow in any portion of a watercourse, the Discharger must file a petition with the State Water Board, Division of Water Rights, and receive approval for such a change. (Water Code section 1211).

o. Failure to comply with provisions or requirements of this Order, or violation of other applicable laws or regulations governing discharges from this facility, may subject the Discharger to administrative or civil liabilities, criminal penalties, and/or other enforcement remedies to ensure compliance. Additionally, certain violations may subject the Discharger to civil or criminal enforcement from appropriate local, state, or federal law enforcement entities.

p. In the event the Discharger does not comply or will be unable to comply for any reason, with any prohibition, maximum daily effluent limitation**,** hourly average effluent limitation, or receiving water limitation of this Order, the Discharger shall notify the Central Valley Water Board by telephone (916) 464-3291 within 24 hours of having knowledge of such noncompliance, and shall confirm this notification in writing within five days, unless the Central Valley Water Board waives confirmation. The written notification shall state the nature, time, duration, and cause of noncompliance, and shall describe the measures being taken to remedy the current noncompliance and prevent recurrence including, where applicable, a schedule of implementation. Other noncompliance requires written notification as above at the time of the normal monitoring report.

B. Monitoring and Reporting Program (MRP) Requirements

The Discharger shall comply with the MRP, and future revisions thereto, in Attachment E.

C. Special Provisions

1. Reopener Provisions

a. Conditions that necessitate a major modification of a permit are described in 40 CFR 122.62, including, but not limited to:

i. If new or amended applicable water quality standards are promulgated or approved pursuant to section 303 of the CWA, or amendments thereto, this permit may be reopened and modified in accordance with the new or amended standards.

ii. When new information, that was not available at the time of permit issuance, would have justified different permit conditions at the time of issuance.

b. This Order may be reopened for modification, or revocation and reissuance, as a result of the detection of a reportable priority pollutant generated by special conditions included in this Order. These special conditions may be, but are not limited to, fish tissue sampling, whole effluent toxicity, monitoring requirements on internal waste stream(s), and monitoring for surrogate parameters. Additional requirements may be included in this Order as a result of the special condition monitoring data.

c. **Mercury**. The Basin Plan's Delta Mercury Control Program was designed to proceed in two phases. After Phase 1, the Central Valley Water Board will conduct a Phase 1 Delta Mercury Control Program Review that considers modification to the Delta Mercury Control Program. This Order may be reopened to address changes to the Delta Mercury Control Program.

d. **Bay-Delta Plan South Delta Salinity Objectives Update**. The State Water Board is currently in the process of updating the South Delta Salinity Objectives contained in the Bay-Delta Plan. The updated salinity objectives may result in needed changes to the salinity requirements of this Order. Therefore, this Order may be reopened to modify salinity requirements, as appropriate, in accordance with changes to the Bay-Delta Plan.

e. **Pollution Prevention.** This Order requires the Discharger to prepare and implement a pollution prevention plan following Water Code section 13263.3(d)(3) for mercury. Based on a review of the pollution prevention plan, this Order may be reopened for addition and/or modification of effluent limitations and requirements for mercury.

f. **Whole Effluent Toxicity**. As a result of a Toxicity Reduction Evaluation (TRE), this Order may be reopened to include a numeric chronic toxicity limitation, a new acute toxicity limitation, and/or a limitation for a specific toxicant identified in the TRE. Additionally, if the State Water Board revises the SIP's toxicity control provisions that would require the establishment of numeric chronic toxicity effluent limitations, this Order may be reopened to include a numeric chronic toxicity effluent limitation based on the new provisions.

g. **Water Effects Ratios (WER) and Metal Translators.** A default WER of 1.0 has been used in this Order for calculating criteria for applicable inorganic constituents. In addition, default dissolved-to-total metal translators have been used to convert water quality objectives from dissolved to total recoverable when developing effluent

limitations for inorganic constituents. If the Discharger performs studies to determine site-specific WERs and/or site-specific dissolved-to-total metal translators, this Order may be reopened to modify the effluent limitations for the applicable inorganic constituents.

h. **Drinking Water Policy.** On 26 July 2013 the Central Valley Water Board adopted Resolution No. R5-2013-0098 amending the Basin Plan and establishing a Drinking Water Policy. The State Water Board will consider adoption of the Drinking Water Policy at a future meeting. This Order may be reopened to incorporate monitoring of drinking water constituents to implement the Drinking Water Policy.

i. **Ultraviolet Light (UV) Disinfection Operating Specifications**. The UV operating specifications in this Order are based on the UV guidelines developed by the National Water Research Institute and American Water Works Association Research Foundation titled, "*Ultraviolet Disinfection Guidelines for Drinking Water and Water Reuse*." If the Discharger conducts a site-specific UV Engineering Study that identifies site-specific UV operating specifications that will achieve the virus inactivation equivalent to Title 22 disinfected tertiary recycled water, this Order may be reopened to modify the UV operating requirements.

j. **Diazinon and Chlorpyrifos Basin Plan Amendment.** Central Valley Water Board staff is developing a Basin Plan Amendment to provide an implementation plan for NPDES-permitted domestic wastewater dischargers. This Order may be reopened to modify diazinon and chlorpyrifos effluent limitations, as appropriate, in accordance with an amendment to the Basin Plan.

2. Special Studies, Technical Reports and Additional Monitoring Requirements

a. **Whole Effluent Toxicity**. For compliance with the Basin Plan's narrative toxicity objective, this Order requires the Discharger to conduct chronic whole effluent toxicity (WET) testing, as specified in MRP section V. Furthermore, this Provision requires the Discharger to investigate the causes of, and identify corrective actions to reduce or eliminate effluent toxicity. If the discharge exceeds the numeric toxicity monitoring trigger during accelerated monitoring established in this Provision, the Discharger is required to initiate a TRE in accordance with an approved TRE Work Plan, and take actions to mitigate the impact of the discharge and prevent recurrence of toxicity. A TRE is a site-specific study conducted in a stepwise process to identify the source(s) of toxicity and the effective control measures for effluent toxicity. TREs are designed to identify the causative agents and sources of whole effluent toxicity, evaluate the effectiveness of the toxicity control options, and confirm the reduction in effluent toxicity. This Provision includes procedures for accelerated chronic toxicity monitoring and TRE initiation.

i. **Accelerated Monitoring and TRE Initiation.** When the numeric toxicity monitoring trigger is exceeded during regular chronic toxicity monitoring, and the testing meets all test acceptability criteria, the Discharger shall initiate accelerated monitoring as required in the Accelerated Monitoring Specifications. The Discharger shall initiate a TRE to address effluent toxicity if any WET testing results exceed the numeric toxicity monitoring trigger during accelerated monitoring.

ii. **Numeric Toxicity Monitoring Trigger.** The numeric toxicity monitoring trigger to initiate a TRE is > 1TUc (where TUc = 100/NOEC). The monitoring trigger is not an effluent limitation; it is the toxicity threshold at which the Discharger is required to begin accelerated monitoring and initiate a TRE.

iii. **Accelerated Monitoring Specifications.** If the numeric toxicity monitoring trigger is exceeded during regular chronic toxicity testing, the Discharger shall initiate accelerated monitoring within 14-days of notification by the laboratory of the exceedance. Accelerated monitoring shall consist of four chronic toxicity tests conducted once every two weeks using the species that exhibited toxicity. The following protocol shall be used for accelerated monitoring and TRE initiation:

(a) If the results of four consecutive accelerated monitoring tests do not exceed the monitoring trigger, the Discharger may cease accelerated monitoring and resume regular chronic toxicity monitoring. However, notwithstanding the accelerated monitoring results, if there is adequate evidence of effluent toxicity, the Executive Officer may require that the Discharger initiate a TRE.

(b) If the source(s) of the toxicity is easily identified (e.g., temporary plant upset), the Discharger shall make necessary corrections to the facility and shall continue accelerated monitoring until four consecutive accelerated tests do not exceed the monitoring trigger. Upon confirmation that the effluent toxicity has been removed, the Discharger may cease accelerated monitoring and resume regular chronic toxicity monitoring.

(c) If the result of any accelerated toxicity test exceeds the monitoring trigger, the Discharger shall cease accelerated monitoring and begin a TRE to investigate the cause(s) of, and identify corrective actions to reduce or eliminate effluent toxicity. Within thirty (30) days of notification by the laboratory of any test result exceeding the monitoring trigger during accelerated monitoring, the Discharger shall submit a TRE Action Plan to the Central Valley Water Board including, at minimum:

(1) Specific actions the Discharger will take to investigate and identify the cause(s) of toxicity, including a TRE WET monitoring schedule;

(2) Specific actions the Discharger will take to mitigate the impact of the discharge and prevent the recurrence of toxicity; and

(3) A schedule for these actions.

b. **Phase I Methylmercury Control Study**. In accordance with the Basin Plan's Delta Mercury Control Program and the compliance schedule included in this Order for methylmercury (Section VI.C.7.a), the Discharger is required to develop a Phase 1 Methylmercury Control Study to evaluate existing control methods and, as needed, develop additional control methods that could be implemented to achieve the methylmercury waste load allocation. A work plan was submitted by the Discharger in June 2012. The study work plan will be reviewed by a Technical Advisory Committee (TAC) and approved by the Executive Officer. The work plan shall be implemented immediately after approval by the Executive Officer, and a progress report shall be submitted by **20 October 2015.**

The Study shall evaluate the feasibility of reducing sources more than the minimum amount needed to achieve the methylmercury allocation. The Study also may include an evaluation of innovative actions, watershed approaches, offsets projects, and other short and long-term actions that result in reducing inorganic (total) mercury and methylmercury to address the accumulation of methylmercury in fish tissue and to reduce methylmercury exposure. The Study may evaluate the effectiveness of using inorganic (total) mercury controls to control methylmercury discharges.

The Study shall include a description of methylmercury and/or inorganic (total) mercury management practices identified in Phase 1; an evaluation of the effectiveness, costs, potential environmental effects, and overall feasibility of the control actions. The Study shall also include proposed implementation plans and schedules to comply with methylmercury allocations as soon as possible. The Study shall be submitted to the Central Valley Water Board by **20 October 2018.**

The Executive Officer may, after public notice, extend the due date up to 2 years if the Discharger demonstrates it is making significant progress towards developing, implementing and/or completing the Study and reasonable attempts have been made to secure funding for the Study, but the Discharger has experienced severe budget shortfalls.

3. Best Management Practices and Pollution Prevention

a. **Pollution Prevention Plan (PPP) for Mercury**. The Discharger submitted a PPP for mercury dated 20 April 2012 in accordance with the Delta Mercury Control Program. The Discharger shall continue to implement the PPP and annual progress reports shall be submitted in accordance with the Monitoring and Reporting Program (Attachment E, section X.D.1.). The progress reports shall discuss the effectiveness of the PPP in the reduction of mercury in the discharge, include a summary of mercury and methylmercury monitoring results, and discuss updates to the PPP.

b. **Mercury Exposure Reduction Program (MERP)**. The Discharger shall participate in an MERP in accordance with the Basin Plan's Delta Mercury Control Program. By letter dated 13 May 2013, the Discharger elected to provide financial support in the collective MERP with other Delta dischargers, rather than be individually responsible for any MERP activities. An exposure reduction work plan for Executive Officer approval was submitted on 20 October 2013. The objective of the Exposure Reduction Program is to reduce mercury exposure of Delta fish consumers most likely affected by mercury. The work plan shall address the Exposure Reduction Program objective, elements, and the Discharger's coordination with other stakeholders. The minimum requirements for the exposure reduction work plan are outlined in the Fact Sheet (Attachment F, section VI.B.3.b). The Discharger shall

integrate or, at minimum, provide good-faith opportunities for integration of community-based organizations, tribes, and consumers of Delta fish into planning, decision making, and implementation of exposure reduction activities. The Discharger shall continue to participate in the group effort to implement the work plan.

c. **Salinity Evaluation and Minimization Plan**. The Discharger shall prepare a Salinity Evaluation and Minimization Plan to identify and address sources of salinity from the Facility. The plan shall be completed and submitted to the Central Valley Water Board by **1 December 2014** for the approval by the Executive Officer.

4. Construction, Operation and Maintenance Specifications

a. The treatment facilities shall be designed, constructed, operated, and maintained to prevent inundation or washout due to floods with a 100-year return frequency.

b. **Filtration System Operating Specifications.** To ensure the filtration system is operating properly to provide adequate disinfection of the wastewater, the turbidity of the filter effluent measured at Monitoring Location UVS-001 shall not exceed:

i. 0.2 NTU more than 5 percent of the time within a 24-hour period, and
ii. 0.5 NTU at any time.

c. **Ultraviolet Light (UV) Disinfection System Operating Specifications.** The UV disinfection system must be operated in accordance with an operations and maintenance program that assures adequate disinfection, and shall meet the following minimum specifications to provide virus inactivation equivalent to Title 22 Disinfected Tertiary Recycled Water:

i. **UV Dose**. The minimum hourly average UV dose in the UV reactor shall be 80 millijoules per square centimeter (mJ/cm^2).

ii. **UV Transmittance.** The minimum hourly average UV transmittance (at 254 nanometers) in the wastewater measured at Monitoring Location UVS-001 shall not fall below 65 percent.

iii. The lamp sleeves and cleaning system components must be visually inspected per the manufacturer's operations manual for physical wear (scoring, solarization, seal leaks, cleaning fluid levels, etc.) and to check the efficacy of the cleaning system.

iv. The lamp sleeves must be cleaned periodically as necessary to meet the UV dose requirements.

v. Lamps must be replaced per the manufacturer's operations manual, or sooner, if there are indications the lamps are failing to provide adequate disinfection. Lamp age and lamp replacement records must be maintained.

5. Special Provisions for Municipal Facilities (POTWs Only)

a. **Sludge/Biosolids Treatment or Discharge Specifications.** Sludge in this document means the solid, semisolid, and liquid residues removed during primary, secondary, or advanced wastewater treatment processes. Solid waste refers to grit and screening material generated during preliminary treatment. Residual sludge means sludge that will not be subject to further treatment at the wastewater treatment plant. Biosolids refer to sewage that has been treated and tested and shown to be capable of being beneficially and legally used pursuant to federal and state regulations as a soil amendment for agricultural, silvicultural, horticultural, and land reclamation activities as specified under 40 CFR Part 503.

i. Collected screenings, residual sludge, biosolids, and other solids removed from liquid wastes shall be disposed of in a manner approved by the Executive Officer, and consistent with *Consolidated Regulations for Treatment, Storage, Processing, or Disposal of Solid Waste*, as set forth in Title 27, CCR, division 2, subdivision 1, section 20005, et seq. Removal for further treatment, storage, disposal, or reuse at sites (e.g., landfill, composting sites, soil amendment sites) that are operated in accordance with valid waste discharge requirements issued by a Regional Water Board will satisfy these specifications.

Sludge and solid waste shall be removed from screens, sumps, ponds, clarifiers, etc., as needed to ensure optimal plant performance.

The treatment of sludge generated at the Facility shall be confined to the Facility property and conducted in a manner that precludes infiltration of waste constituents into soils in a mass or concentration that will violate groundwater limitations in section V.B. of this Order. In addition, the storage of residual sludge, solid waste, and biosolids on Facility property shall be temporary and controlled, and contained in a manner that minimizes leachate formation and precludes infiltration of waste constituents into soils in a mass or concentration that will violate groundwater limitations included in section V.B. of this Order.

ii. The use, disposal, storage, and transportation of biosolids shall comply with existing federal and state laws and regulations, including permitting requirements and technical standards included in 40 CFR Part 503. If the State Water Board and the Central Valley Water Board are given the authority to implement regulations contained in 40 CFR Part 503, this Order may be reopened to incorporate appropriate time schedules and technical standards. The Discharger must comply with the standards and time schedules contained in 40 CFR Part 503 whether or not they have been incorporated into this Order.

iii. The Discharger shall comply with Section IX.A. Biosolids of the Monitoring and Reporting Program, Attachment E.

iv. Any proposed change in biosolids use or disposal practice from a previously approved practice shall be reported to the Executive Officer and USEPA Regional Administrator at least **90 days** in advance of the change.

v. **Within 180 days of the permit effective date,** the Discharger shall submit a biosolids use or disposal plan to the Central Valley Water Board. The plan shall describe at a minimum:

(a) Sources and amounts of biosolids generated annually.

(b) Location(s) of on-site storage and description of the containment area.

(c) Plans for ultimate disposal. For landfill disposal, include the present classification of the landfill and the name and location of the landfill.

b. **Biosolids Storage and Transportation Specifications**

Biosolids shall be considered to be “stored” if they are placed on the ground or in non-mobile containers (i.e., not in a truck or trailer) at an intermediate storage location away from the generator/processing for more than 48 hours. Biosolids shall be considered to be “staged” if placed on the ground for brief periods of time solely to facilitate transfer of the biosolids between transportation and application vehicles.

i. Biosolids shall not be stored directly on the ground at any one location for more than seven (7) consecutive days.

ii. Facilities for the storage of Class B biosolids shall be located, designed and maintained to restrict public access to biosolids.

iii. Biosolids storage facilities shall be designed and maintained to prevent washout or inundation from a storm or flood with a return frequency of 100 years. This requirement shall not apply to the solar drying of biosolids during the non-flood season (April through October), provided that biosolids are removed and disposed of prior to 1 November of each year.

iv. Biosolids storage facilities, which contain biosolids, shall be designed and maintained to contain all storm water falling on the biosolids storage area during a rainfall year with a return frequency of 100 years.

v. Biosolids placed on site for more than 24 hours shall be covered.

vi. Biosolids storage facilities shall be designed, maintained and operated to minimize the generation of leachate and the effects of erosion.

vii. If biosolids are to be stored at the site, a plan describing the storage program and means of complying with the specifications contained in sections VI.C.5.a of this Order shall be submitted for the Central Valley Water Board's staff approval. The storage plan shall also include an adverse weather plan.

viii. The Discharger shall operate the biosolids storage facilities in accordance with the approved biosolids storage plan.

ix. The Discharger shall immediately remove and relocate any biosolids stored on site in violation of this Order.

c. **Collection System**. The Discharger's collection system is part of the system that is subject to this Order. As such, the Discharger must properly operate and maintain its collection system (40 CFR § 122.41(e)). The Discharger must report any non-compliance (40 CFR § 122.41(l)(6) and (7)) and mitigate any discharge from the collection system in violation of this Order (40 CFR § 122.41(d)). See the Order at Standard Provision VI.A.2.c and Attachment D, subsections I.D, V.E, V.H, and I.C.

6. Other Special Provisions

a. Wastewater shall be oxidized, coagulated, filtered, and adequately disinfected pursuant to the Department of Public Health (DPH; formerly the Department of Health Services) reclamation criteria, CCR, Title 22, division 4, chapter 3, (Title 22), or equivalent.

7. Compliance Schedules

a. **Compliance Schedules for Final Effluent Limitations for Methylmercury.** This Order requires compliance with the final effluent limitations for methylmercury by **31 December 2030**. The Discharger shall comply with the following time schedule to ensure compliance with the final effluent limitations:

Task	Date Due
Phase 1	
i. Submit Phase 1 Methylmercury Control Study Work Plan	**Submitted**
ii. Submit Pollution Prevention Plan (PPP)[1] for Mercury (per Section VI.C.3.a)	**Submitted**
iii. Implement Phase 1 Methylmercury Control Study Work Plan	**Immediately following Executive Officer Approval**
iv. Annual Progress Reports[2]	**30 January, annually**
v. Submit Phase 1 Methylmercury Control Study Progress Report	**20 October 2015**
vi. Submit Final Phase 1 Methylmercury Control Study	**20 October 2018[3]**
Phase 2	
vii. Implement methylmercury control programs	**TBD[4]**
viii. Full Compliance	**31 December 2030[3]**

1 The PPP for mercury shall continue to be implemented in accordance with Section VI.C.3.a.

2 Beginning 30 January 2015, and annually thereafter until the Facility achieves compliance with the final effluent limitations for methylmercury, the Discharger shall submit annual progress reports on pollution minimization activities implemented and evaluation of their effectiveness, including a summary of total mercury and methylmercury monitoring results.

3 The Executive Officer may, after public notice, extend the due date for the Final Phase 1 Methylmercury Control Study up to 2 years if the Discharger demonstrates it is making significant progress towards developing, implementing and/or completing the Study and reasonable attempts have been made to secure funding for the Study, but the Discharger has experienced severe budget shortfalls.

4 To be determined. Following Phase 1 the Central Valley Water Board will conduct a Phase 1 Delta Mercury Control Program Review that considers: modification of methylmercury goals, objectives, allocations, final compliance date, etc. Consequently, the start of Phase 2 and the final compliance date is uncertain at the time this Order was adopted.

VII. COMPLIANCE DETERMINATION

A. BOD_5 and TSS Effluent Limitations (Section IV.A.1.a and IV.A.1.b). Compliance with the final effluent limitations for BOD_5 and TSS required in Limitations and Discharge Requirements section IV.A.1.a shall be ascertained by 24-hour composite samples. Compliance with effluent limitations required in Limitations and Discharge Requirements section IV.A.1.b for percent removal shall be calculated using the arithmetic mean of BOD_5 and TSS in effluent samples collected over a monthly period as a percentage of the arithmetic mean of the values for influent samples collected at approximately the same times during the same period.

B. Total Mercury Mass Loading Effluent Limitations (Section IV.A.2.a). The procedures for calculating mass loadings are as follows:

1. The total pollutant mass load for each individual calendar month shall be determined using an average of all concentration data collected that month and the corresponding total monthly flow. All effluent monitoring data collected under the monitoring and reporting program, pretreatment program, and any special studies shall be used for these calculations. The total annual mass loading shall be the sum of the individual calendar months.
2. In calculating compliance, the Discharger shall count all non-detect measures at one-half of the detection level. If compliance with the effluent limitation is not attained due to the non-detect contribution, the Discharger shall improve and implement available analytical capabilities and compliance shall be evaluated with consideration of the detection limits.

C. Average Dry Weather Flow Effluent Limitations (Section IV.A.1.h). The average dry weather discharge flow represents the daily average flow when groundwater is at or near normal and runoff is not occurring. Compliance with the average dry weather flow effluent limitations will be determined annually based on the average daily flow over three consecutive dry weather months (e.g., July, August, and September).

D. Total Coliform Organisms Effluent Limitations (Section IV.A.1.f). For each day that an effluent sample is collected and analyzed for total coliform organisms, the 7-day median shall be determined by calculating the median concentration of total coliform bacteria in the effluent utilizing the bacteriological results of the last 7 days. For example, if a sample is collected on a Wednesday, the result from that sampling event and all results from the previous 6 days (i.e., Tuesday, Monday, Sunday, Saturday, Friday, and Thursday) are used to calculate the 7-day median. If the 7-day median of total coliform organisms exceeds a most probable number (MPN) of 2.2 per 100 milliliters, the Discharger will be considered out of compliance.

E. Mass Effluent Limitations. The mass effluent limitations contained in the Final Effluent Limitations IV.A.1.a are based on the permitted average dry weather flow and calculated as follows:

Mass (lbs/day) = Flow (MGD) x Concentration (mg/L) x 8.34 (conversion factor)

If the effluent flow exceeds the permitted average dry weather flow during wet-weather seasons, the effluent mass limitations contained in Final Effluent Limitations IV.A.1.a shall not apply. If the effluent flow is below the permitted average dry weather flow during wet-weather seasons, the effluent mass limitations do apply.

F. Priority Pollutant Effluent Limitations. Compliance with effluent limitations for priority pollutants shall be determined in accordance with Section 2.4.5 of the SIP, as follows:

1. Dischargers shall be deemed out of compliance with an effluent limitation, if the concentration of the priority pollutant in the monitoring sample is greater than the effluent limitation and greater than or equal to the reporting level (RL).
2. Dischargers shall be required to conduct a Pollutant Minimization Program (PMP) in accordance with section 2.4.5.1 of the SIP when there is evidence that the priority pollutant is present in the effluent above an effluent limitation and either:
   a. A sample result is reported as detected, but not quantified (DNQ) and the effluent limitation is less than the RL; or
   b. A sample result is reported as non-detect (ND) and the effluent limitation is less than the method detection limit (MDL).
3. When determining compliance with an average monthly effluent limitation (AMEL) and more than one sample result is available in a month, the discharger shall compute the arithmetic mean unless the data set contains one or more reported determinations of DNQ or ND. In those cases, the discharger shall compute the median in place of the arithmetic mean in accordance with the following procedure:
   a. The data set shall be ranked from low to high, reported ND determinations lowest, DNQ determinations next, followed by quantified values (if any). The order of the individual ND or DNQ determinations is unimportant.
   b. The median value of the data set shall be determined. If the data set has an odd number of data points, then the median is the middle value. If the data set has an even number of data points, then the median is the average of the two values around the middle unless one or both of the points are ND or DNQ, in which case the median value shall be the lower of the two data points where DNQ is lower than a value and ND is lower than DNQ.
4. If a sample result, or the arithmetic mean or median of multiple sample results, is below the RL, and there is evidence that the priority pollutant is present in the effluent above an effluent limitation and the discharger conducts a PMP (as described in section 2.4.5.1), the discharger shall <u>not</u> be deemed out of compliance.

G. Chlorpyrifos and Diazinon Effluent Limitations (Section IV.A.1.g). Compliance shall be determined by calculating the sum (S), as provided in this Order, with analytical results that are reported as “non - detectable” concentrations to be considered to be zero.

H. Temperature Effluent Limitation (Section IV.A.1.d). For every day receiving water temperature samples are collected at RSW-001, compliance with the final effluent limitations for temperature shall be ascertained using the daily average effluent temperature at Monitoring Location EFF-001 and the daily average temperature of the receiving water measured on the same day at Monitoring Location RSW-001.

I. Chronic Whole Effluent Toxicity Effluent Limitation (Section IV.A.1.e). Compliance with the accelerated monitoring and TRE provisions of Provision VI.C.2.a shall constitute compliance with the effluent limitation.

J. Use of Delta Regional Monitoring Program and other Receiving Water Data to Determine Compliance with Receiving Water Limitations. Delta Regional Monitoring Program data and other receiving water monitoring data that is not specifically required to be conducted by the Discharger under this permit, will not be used directly to determine that the discharge is in violation of this Permit. The Discharger may, however, conduct any site-specific receiving water monitoring deemed appropriate by the Discharger that is not conducted by the Delta RMP and submit that monitoring data. As described in Section VIII of

Attachment E, such data may be used, if scientifically defensible, in conjunction with other receiving water data, effluent data, receiving water flow data, and other pertinent information to determine whether or not a discharge is in compliance with this Permit.

ATTACHMENT A – DEFINITIONS

Arithmetic Mean (m)
Also called the average, is the sum of measured values divided by the number of samples. For ambient water concentrations, the arithmetic mean is calculated as follows:

Arithmetic mean = $m = Sx / n$ where: Sx is the sum of the measured ambient water concentrations, and n is the number of samples.

Average Monthly Effluent Limitation (AMEL)
The highest allowable average of daily discharges over a calendar month, calculated as the sum of all daily discharges measured during a calendar month divided by the number of daily discharges measured during that month.

Average Weekly Effluent Limitation (AWEL)
The highest allowable average of daily discharges over a calendar week (Sunday through Saturday), calculated as the sum of all daily discharges measured during a calendar week divided by the number of daily discharges measured during that week.

Bioaccumulative
Those substances taken up by an organism from its surrounding medium through gill membranes, epithelial tissue, or from food and subsequently concentrated and retained in the body of the organism.

Carcinogenic
Pollutants are substances that are known to cause cancer in living organisms.

Coefficient of Variation (CV)
CV is a measure of the data variability and is calculated as the estimated standard deviation divided by the arithmetic mean of the observed values.

Daily Discharge
Daily Discharge is defined as either: (1) the total mass of the constituent discharged over the calendar day (12:00 am through 11:59 pm) or any 24-hour period that reasonably represents a calendar day for purposes of sampling (as specified in the permit), for a constituent with limitations expressed in units of mass or; (2) the unweighted arithmetic mean measurement of the constituent over the day for a constituent with limitations expressed in other units of measurement (e.g., concentration).

The daily discharge may be determined by the analytical results of a composite sample taken over the course of one day (a calendar day or other 24-hour period defined as a day) or by the arithmetic mean of analytical results from one or more grab samples taken over the course of the day.

For composite sampling, if 1 day is defined as a 24-hour period other than a calendar day, the analytical result for the 24-hour period will be considered as the result for the calendar day in which the 24-hour period ends.

Detected, but Not Quantified (DNQ)
DNQ are those sample results less than the RL, but greater than or equal to the laboratory's MDL. Sample results reported as DNQ are estimated concentrations.

Dilution Credit
Dilution Credit is the amount of dilution granted to a discharge in the calculation of a water quality-based effluent limitation, based on the allowance of a specified mixing zone. It is calculated from the dilution ratio or determined through conducting a mixing zone study or modeling of the discharge and receiving water.

Effluent Concentration Allowance (ECA)
ECA is a value derived from the water quality criterion/objective, dilution credit, and ambient background concentration that is used, in conjunction with the coefficient of variation for the effluent monitoring data, to calculate a long-term average (LTA) discharge concentration. The ECA has the same meaning as waste load allocation (WLA) as used in U.S. EPA guidance (Technical Support Document For Water Quality-based Toxics Control, March 1991, second printing, EPA/505/2-90-001).

Enclosed Bays
Enclosed Bays means indentations along the coast that enclose an area of oceanic water within distinct headlands or harbor works. Enclosed bays include all bays where the narrowest distance between the headlands or outermost harbor works is less than 75 percent of the greatest dimension of the enclosed portion of the bay. Enclosed bays include, but are not limited to, Humboldt Bay, Bodega Harbor, Tomales Bay, Drake's Estero, San Francisco Bay, Morro Bay, Los Angeles-Long Beach Harbor, Upper and Lower Newport Bay, Mission Bay, and San Diego Bay. Enclosed bays do not include inland surface waters or ocean waters.

Estimated Chemical Concentration
The estimated chemical concentration that results from the confirmed detection of the substance by the analytical method below the ML value.

Estuaries
Estuaries means waters, including coastal lagoons, located at the mouths of streams that serve as areas of mixing for fresh and ocean waters. Coastal lagoons and mouths of streams that are temporarily separated from the ocean by sandbars shall be considered estuaries. Estuarine waters shall be considered to extend from a bay or the open ocean to a point upstream where there is no significant mixing of fresh water and seawater. Estuarine waters included, but are not limited to, the Sacramento-San Joaquin Delta, as defined in Water Code section 12220, Suisun Bay, Carquinez Strait downstream to the Carquinez Bridge, and appropriate areas of the Smith, Mad, Eel, Noyo, Russian, Klamath, San Diego, and Otay rivers. Estuaries do not include inland surface waters or ocean waters.

Inland Surface Waters
All surface waters of the state that do not include the ocean, enclosed bays, or estuaries.

Instantaneous Maximum Effluent Limitation
The highest allowable value for any single grab sample or aliquot (i.e., each grab sample or aliquot is independently compared to the instantaneous maximum limitation).

Instantaneous Minimum Effluent Limitation
The lowest allowable value for any single grab sample or aliquot (i.e., each grab sample or aliquot is independently compared to the instantaneous minimum limitation).

Maximum Daily Effluent Limitation (MDEL)
The highest allowable daily discharge of a pollutant, over a calendar day (or 24-hour period). For pollutants with limitations expressed in units of mass, the daily discharge is calculated as the total mass of the pollutant discharged over the day. For pollutants with limitations expressed in other units of measurement, the daily discharge is calculated as the arithmetic mean measurement of the pollutant over the day.

Median
The middle measurement in a set of data. The median of a set of data is found by first arranging the measurements in order of magnitude (either increasing or decreasing order). If the number of measurements (n) is odd, then the median = $X_{(n+1)/2}$. If n is even, then the median = $(X_{n/2} + X_{(n/2)+1})/2$ (i.e., the midpoint between the n/2 and n/2+1).

Method Detection Limit (MDL)
MDL is the minimum concentration of a substance that can be measured and reported with 99 percent confidence that the analyte concentration is greater than zero, as defined in in 40 CFR part 136, Attachment B, revised as of July 3, 1999.

Minimum Level (ML)
ML is the concentration at which the entire analytical system must give a recognizable signal and acceptable calibration point. The ML is the concentration in a sample that is equivalent to the concentration of the lowest calibration standard analyzed by a specific analytical procedure, assuming that all the method specified sample weights, volumes, and processing steps have been followed.

Mixing Zone
Mixing Zone is a limited volume of receiving water that is allocated for mixing with a wastewater discharge where water quality criteria can be exceeded without causing adverse effects to the overall water body.

Not Detected (ND)
Sample results which are less than the laboratory's MDL.

Ocean Waters
The territorial marine waters of the State as defined by California law to the extent these waters are outside of enclosed bays, estuaries, and coastal lagoons. Discharges to ocean waters are regulated in accordance with the State Water Board's California Ocean Plan.

Persistent Pollutants
Persistent pollutants are substances for which degradation or decomposition in the environment is nonexistent or very slow.

Pollutant Minimization Program (PMP)
PMP means waste minimization and pollution prevention actions that include, but are not limited to, product substitution, waste stream recycling, alternative waste management methods, and education of the public and businesses. The goal of the PMP shall be to reduce all potential sources of a priority pollutant(s) through pollutant minimization (control) strategies, including pollution prevention measures as appropriate, to maintain the effluent concentration at or below the water quality-based effluent limitation. Pollution prevention measures may be particularly appropriate for persistent bioaccumulative priority pollutants where there is evidence that beneficial uses are being impacted. The Central Valley Water Board may consider cost effectiveness when establishing the requirements of a PMP. The completion and implementation of a Pollution Prevention Plan, if required pursuant to Water Code section 13263.3(d), shall be considered to fulfill the PMP requirements.

Pollution Prevention
Pollution Prevention means any action that causes a net reduction in the use or generation of a hazardous substance or other pollutant that is discharged into water and includes, but is not limited to, input change, operational improvement, production process change, and product reformulation (as defined in Water Code section 13263.3). Pollution prevention does not include actions that merely shift a pollutant in wastewater from one environmental medium to another environmental medium, unless clear environmental benefits of such an approach are identified to the satisfaction of the State Water Resources Control Board (State Water Board) or Central Valley Water Board.

Satellite Collection System
The portion, if any, of a sanitary sewer system owned or operated by a different public agency than the agency that owns and operates the wastewater treatment facility that a sanitary sewer system is tributary to.

Source of Drinking Water
Any water designated as municipal or domestic supply (MUN) in a Central Valley Water Board Basin Plan.

Standard Deviation (s)
Standard Deviation is a measure of variability that is calculated as follows:

$$s = (\sum [(x - m)^2]/(n - 1))^{0.5}$$

where:
x is the observed value;
m is the arithmetic mean of the observed values; and
n is the number of samples.

Toxicity Reduction Evaluation (TRE)
TRE is a study conducted in a step-wise process designed to identify the causative agents of effluent or ambient toxicity, isolate the sources of toxicity, evaluate the effectiveness of toxicity control options, and then confirm the reduction in toxicity. The first steps of the TRE consist of the collection of data relevant to the toxicity, including additional toxicity testing, and an evaluation of facility operations and maintenance practices, and best management practices. A Toxicity Identification Evaluation (TIE) may be required as part of the TRE, if appropriate. (A TIE is a set of procedures to identify the specific chemical(s) responsible for toxicity. These procedures are performed in three phases (characterization, identification, and confirmation) using aquatic organism toxicity tests.)

ATTACHMENT B – MAP

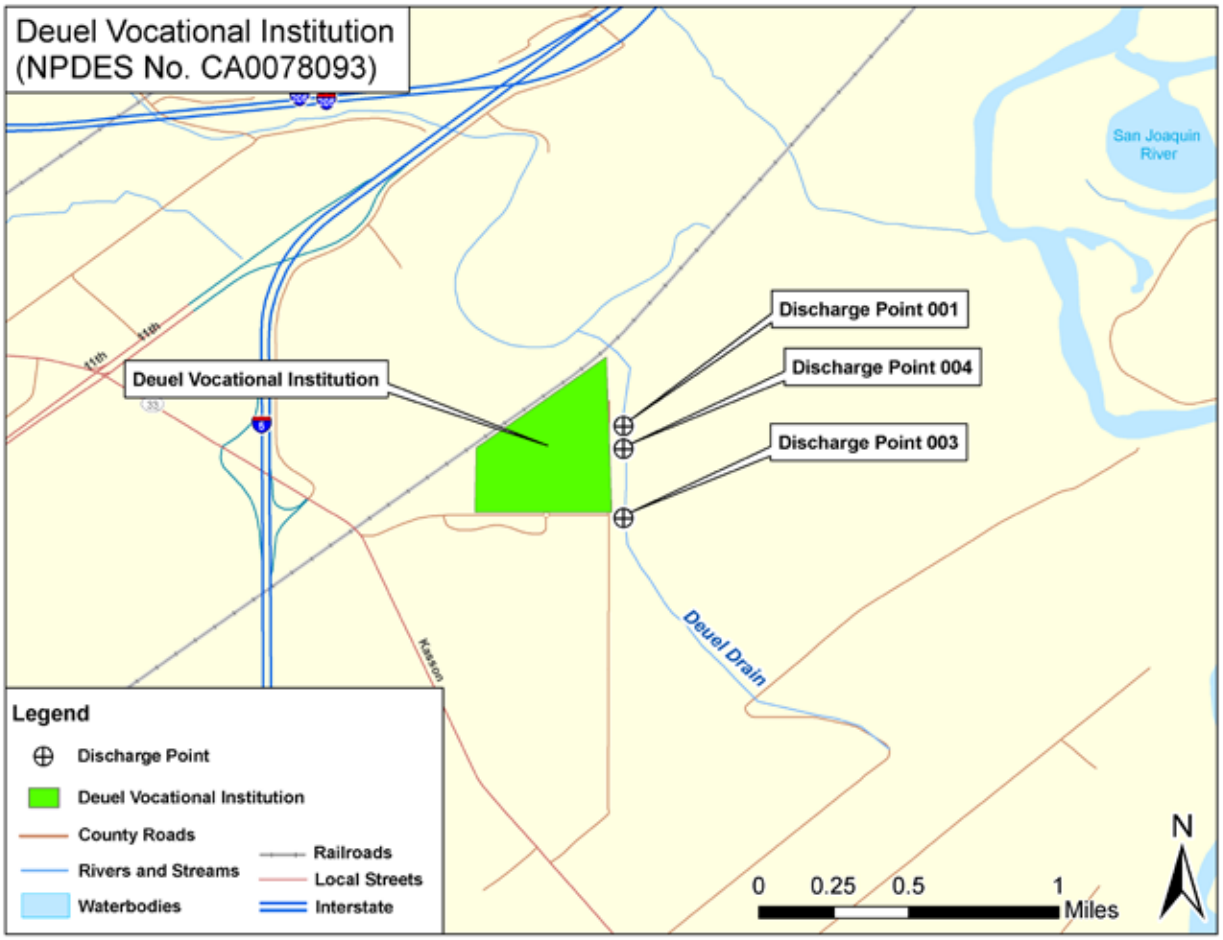

ATTACHMENT C – FLOW SCHEMATIC

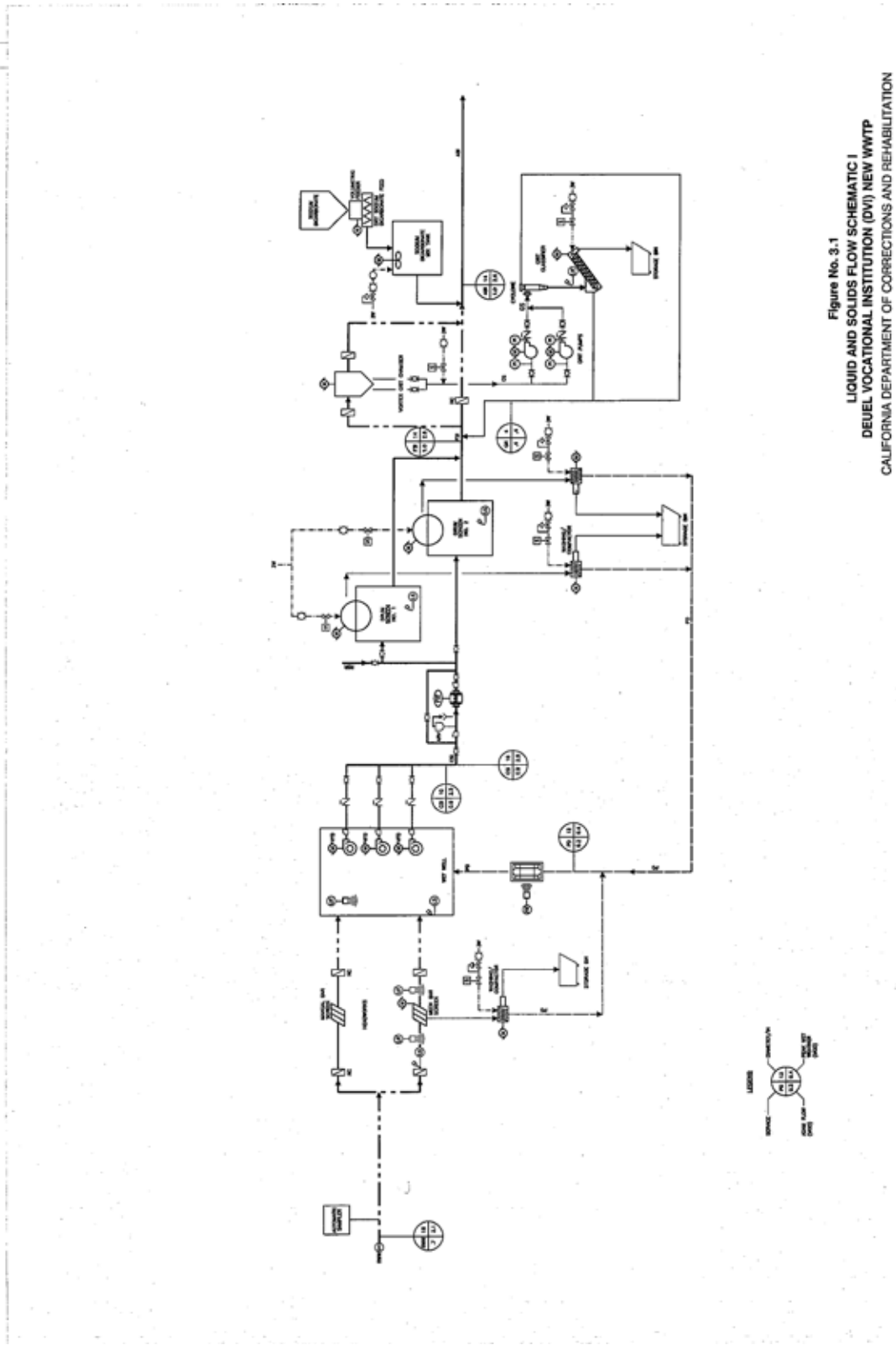

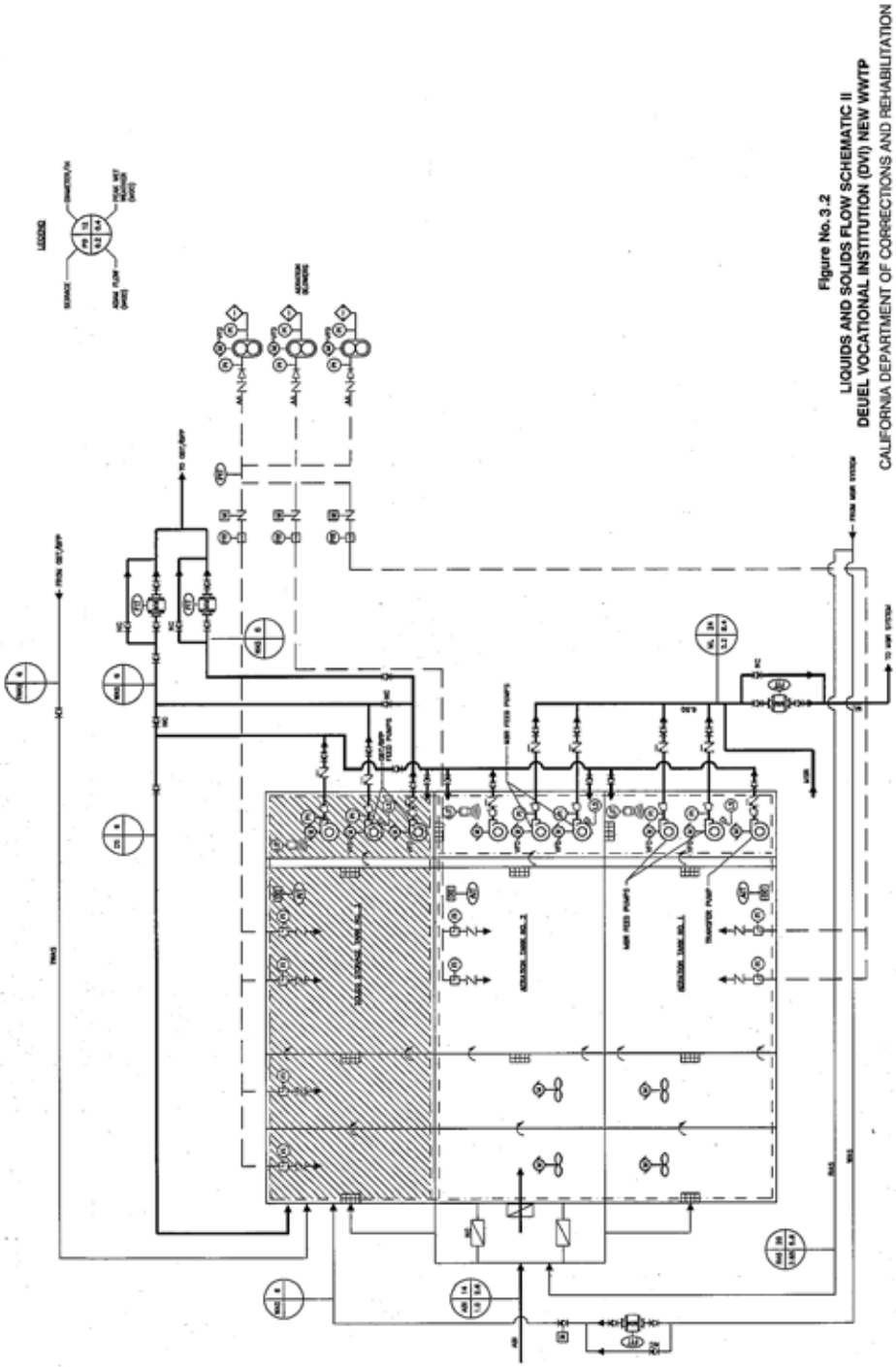
Figure No. 3.2
LIQUIDS AND SOLIDS FLOW SCHEMATIC II
DEUEL VOCATIONAL INSTITUTION (DVI) NEW WWTP
CALIFORNIA DEPARTMENT OF CORRECTIONS AND REHABILITATION

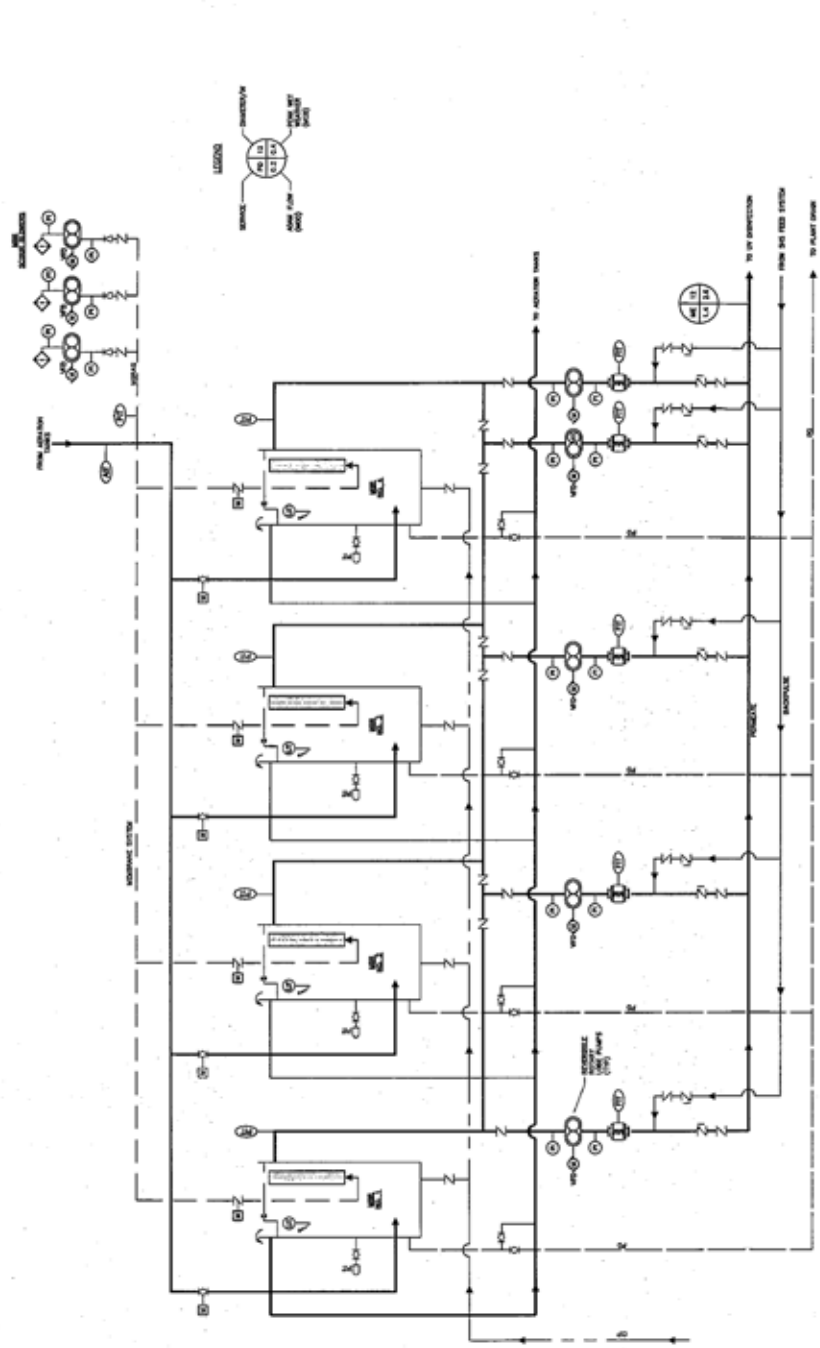

Figure No. 3.3
LIQUIDS AND SOLIDS FLOW SCHEMATIC III
DEUEL VOCATIONAL INSTITUTION (DVI) NEW WWTP
CALIFORNIA DEPARTMENT OF CORRECTIONS AND REHABILITATION

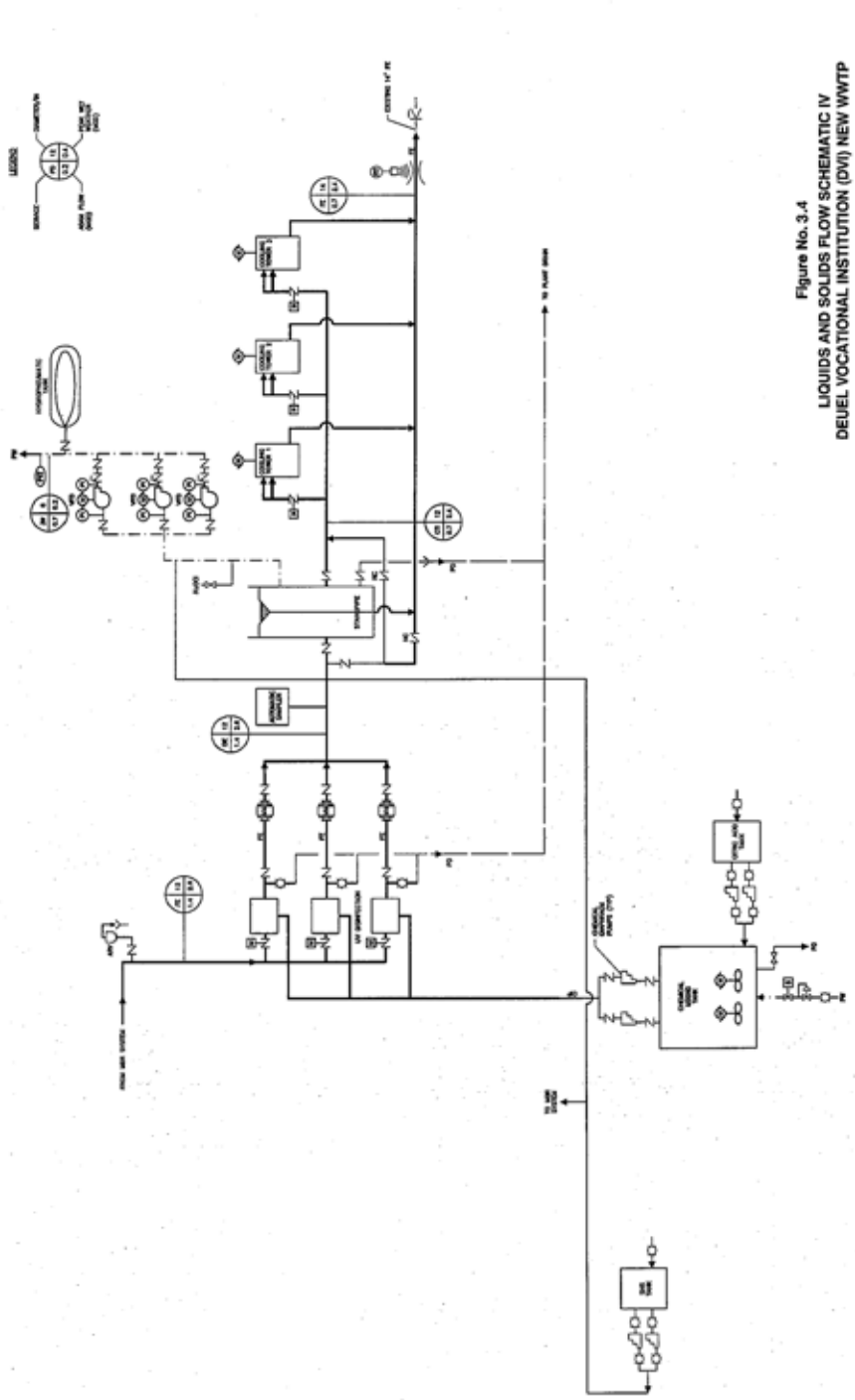

Figure No. 3.4
LIQUIDS AND SOLIDS FLOW SCHEMATIC IV
DEUEL VOCATIONAL INSTITUTION (DVI) NEW WWTP
CALIFORNIA DEPARTMENT OF CORRECTIONS AND REHABILITATION

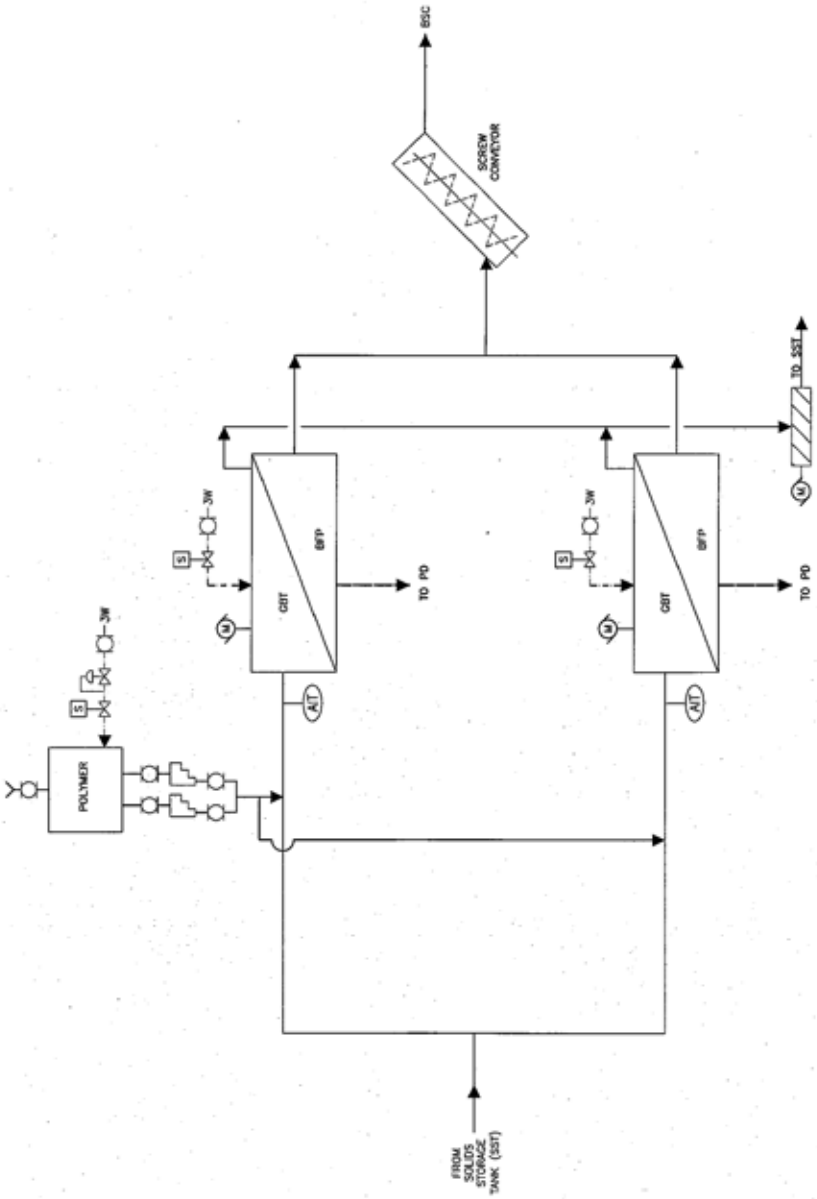

Figure No. 3.5
LIQUIDS AND SOLIDS FLOW SCHEMATIC V
DEUEL VOCATIONAL INSTITUTION (DVI) NEW WWTP
CALIFORNIA DEPARTMENT OF CORRECTIONS AND REHABILITATION

ATTACHMENT D – STANDARD PROVISIONS

I. STANDARD PROVISIONS – PERMIT COMPLIANCE

A. Duty to Comply

1. The Discharger must comply with all of the conditions of this Order. Any noncompliance constitutes a violation of the Clean Water Act (CWA) and the California Water Code and is grounds for enforcement action, for permit termination, revocation and reissuance, or modification; or denial of a permit renewal application. (40 CFR § 122.41(a).)

2. The Discharger shall comply with effluent standards or prohibitions established under Section 307(a) of the CWA for toxic pollutants and with standards for sewage sludge use or disposal established under Section 405(d) of the CWA within the time provided in the regulations that establish these standards or prohibitions, even if this Order has not yet been modified to incorporate the requirement. (40 CFR § 122.41(a)(1).)

B. Need to Halt or Reduce Activity Not a Defense

It shall not be a defense for a Discharger in an enforcement action that it would have been necessary to halt or reduce the permitted activity in order to maintain compliance with the conditions of this Order. (40 CFR § 122.41(c).)

C. Duty to Mitigate

The Discharger shall take all reasonable steps to minimize or prevent any discharge or sludge use or disposal in violation of this Order that has a reasonable likelihood of adversely affecting human health or the environment. (40 CFR § 122.41(d).)

D. Proper Operation and Maintenance

The Discharger shall at all times properly operate and maintain all facilities and systems of treatment and control (and related appurtenances) which are installed or used by the Discharger to achieve compliance with the conditions of this Order. Proper operation and maintenance also includes adequate laboratory controls and appropriate quality assurance procedures. This provision requires the operation of backup or auxiliary facilities or similar systems that are installed by a Discharger only when necessary to achieve compliance with the conditions of this Order. (40 CFR § 122.41(e).)

E. Property Rights

1. This Order does not convey any property rights of any sort or any exclusive privileges. (40 CFR § 122.41(g).)

2. The issuance of this Order does not authorize any injury to persons or property or invasion of other private rights, or any infringement of state or local law or regulations. (40 CFR § 122.5(c).)

F. Inspection and Entry

The Discharger shall allow the Central Valley Water Board, State Water Board, U.S. EPA, and/or their authorized representatives (including an authorized contractor acting as their representative), upon the presentation of credentials and other documents, as may be required by law, to (40 CFR § 122.41(i); Wat. Code, § 13383):

1. Enter upon the Discharger's premises where a regulated facility or activity is located or conducted, or where records are kept under the conditions of this Order (40 CFR § 122.41(i)(1));

2. Have access to and copy, at reasonable times, any records that must be kept under the conditions of this Order (40 CFR § 122.41(i)(2));
3. Inspect and photograph, at reasonable times, any facilities, equipment (including monitoring and control equipment), practices, or operations regulated or required under this Order (40 CFR § 122.41(i)(3)); and
4. Sample or monitor, at reasonable times, for the purposes of assuring Order compliance or as otherwise authorized by the CWA or the Water Code, any substances or parameters at any location. (40 CFR § 122.41(i)(4).)

G. Bypass

1. Definitions
   a. "Bypass" means the intentional diversion of waste streams from any portion of a treatment facility. (40 CFR § 122.41(m)(1)(i).)
   b. "Severe property damage" means substantial physical damage to property, damage to the treatment facilities, which causes them to become inoperable, or substantial and permanent loss of natural resources that can reasonably be expected to occur in the absence of a bypass. Severe property damage does not mean economic loss caused by delays in production. (40 CFR § 122.41(m)(1)(ii).)
2. Bypass not exceeding limitations. The Discharger may allow any bypass to occur which does not cause exceedances of effluent limitations, but only if it is for essential maintenance to assure efficient operation. These bypasses are not subject to the provisions listed in Standard Provisions – Permit Compliance I.G.3, I.G.4, and I.G.5 below. (40 CFR § 122.41(m)(2).)
3. Prohibition of bypass. Bypass is prohibited, and the Central Valley Water Board may take enforcement action against a Discharger for bypass, unless (40 CFR § 122.41(m)(4)(i)):
   a. Bypass was unavoidable to prevent loss of life, personal injury, or severe property damage (40 CFR § 122.41(m)(4)(i)(A));
   b. There were no feasible alternatives to the bypass, such as the use of auxiliary treatment facilities, retention of untreated wastes, or maintenance during normal periods of equipment downtime. This condition is not satisfied if adequate back-up equipment should have been installed in the exercise of reasonable engineering judgment to prevent a bypass that occurred during normal periods of equipment downtime or preventive maintenance (40 CFR § 122.41(m)(4)(i)(B)); and
   c. The Discharger submitted notice to the Central Valley Water Board as required under Standard Provisions – Permit Compliance I.G.5 below. (40 CFR § 122.41(m)(4)(i)(C).)
4. The Central Valley Water Board may approve an anticipated bypass, after considering its adverse effects, if the Central Valley Water Board determines that it will meet the three conditions listed in Standard Provisions – Permit Compliance I.G.3 above. (40 CFR § 122.41(m)(4)(ii).)
5. Notice
   a. Anticipated bypass. If the Discharger knows in advance of the need for a bypass, it shall submit a notice, if possible at least 10 days before the date of the bypass. (40 CFR § 122.41(m)(3)(i).)

b. Unanticipated bypass. The Discharger shall submit notice of an unanticipated bypass as required in Standard Provisions - Reporting V.E below (24-hour notice). (40 CFR § 122.41(m)(3)(ii).)

H. Upset

Upset means an exceptional incident in which there is unintentional and temporary noncompliance with technology based permit effluent limitations because of factors beyond the reasonable control of the Discharger. An upset does not include noncompliance to the extent caused by operational error, improperly designed treatment facilities, inadequate treatment facilities, lack of preventive maintenance, or careless or improper operation. (40 CFR § 122.41(n)(1).)

1. Effect of an upset. An upset constitutes an affirmative defense to an action brought for noncompliance with such technology based permit effluent limitations if the requirements of Standard Provisions – Permit Compliance I.H.2 below are met. No determination made during administrative review of claims that noncompliance was caused by upset, and before an action for noncompliance, is final administrative action subject to judicial review. (40 CFR § 122.41(n)(2).)
2. Conditions necessary for a demonstration of upset. A Discharger who wishes to establish the affirmative defense of upset shall demonstrate, through properly signed, contemporaneous operating logs or other relevant evidence that (40 CFR § 122.41(n)(3)):
   a. An upset occurred and that the Discharger can identify the cause(s) of the upset (40 CFR § 122.41(n)(3)(i));
   b. The permitted facility was, at the time, being properly operated (40 CFR § 122.41(n)(3)(ii));
   c. The Discharger submitted notice of the upset as required in Standard Provisions – Reporting V.E.2.b below (24-hour notice) (40 CFR § 122.41(n)(3)(iii)); and
   d. The Discharger complied with any remedial measures required under Standard Provisions – Permit Compliance I.C above. (40 CFR § 122.41(n)(3)(iv).)
3. Burden of proof. In any enforcement proceeding, the Discharger seeking to establish the occurrence of an upset has the burden of proof. (40 CFR § 122.41(n)(4).)

II. STANDARD PROVISIONS – PERMIT ACTION

A. General

This Order may be modified, revoked and reissued, or terminated for cause. The filing of a request by the Discharger for modification, revocation and reissuance, or termination, or a notification of planned changes or anticipated noncompliance does not stay any Order condition. (40 CFR § 122.41(f).)

B. Duty to Reapply

If the Discharger wishes to continue an activity regulated by this Order after the expiration date of this Order, the Discharger must apply for and obtain a new permit. (40 CFR § 122.41(b).)

C. Transfers

This Order is not transferable to any person except after notice to the Central Valley Water Board. The Central Valley Water Board may require modification or revocation and reissuance of the Order to change the name of the Discharger and incorporate such other

requirements as may be necessary under the CWA and the Water Code. (40 CFR § 122.41(l)(3); § 122.61.)

III. STANDARD PROVISIONS – MONITORING

A. Samples and measurements taken for the purpose of monitoring shall be representative of the monitored activity. (40 CFR § 122.41(j)(1).)

B. Monitoring results must be conducted according to test procedures under 40 CFR part 136 or, in the case of sludge use or disposal, approved under 40 CFR part 136 unless otherwise specified in 40 CFR part 503 unless other test procedures have been specified in this Order. (40 CFR § 122.41(j)(4); § 122.44(i)(1)(iv).)

IV. STANDARD PROVISIONS – RECORDS

A. Except for records of monitoring information required by this Order related to the Discharger's sewage sludge use and disposal activities, which shall be retained for a period of at least five years (or longer as required by 40 CFR part 503), the Discharger shall retain records of all monitoring information, including all calibration and maintenance records and all original strip chart recordings for continuous monitoring instrumentation, copies of all reports required by this Order, and records of all data used to complete the application for this Order, for a period of at least three (3) years from the date of the sample, measurement, report or application. This period may be extended by request of the Central Valley Water Board Executive Officer at any time. (40 CFR § 122.41(j)(2).)

B. Records of monitoring information shall include:

1. The date, exact place, and time of sampling or measurements (40 CFR § 122.41(j)(3)(i));
2. The individual(s) who performed the sampling or measurements (40 CFR § 122.41(j)(3)(ii));
3. The date(s) analyses were performed (40 CFR § 122.41(j)(3)(iii));
4. The individual(s) who performed the analyses (40 CFR § 122.41(j)(3)(iv));
5. The analytical techniques or methods used (40 CFR § 122.41(j)(3)(v)); and
6. The results of such analyses. (40 CFR § 122.41(j)(3)(vi).)

C. Claims of confidentiality for the following information will be denied (40 CFR § 122.7(b)):

1. The name and address of any permit applicant or Discharger (40 CFR § 122.7(b)(1)); and
2. Permit applications and attachments, permits and effluent data. (40 CFR § 122.7(b)(2).)

V. STANDARD PROVISIONS – REPORTING

A. Duty to Provide Information

The Discharger shall furnish to the Central Valley Water Board, State Water Board, or U.S. EPA within a reasonable time, any information which the Central Valley Water Board, State Water Board, or U.S. EPA may request to determine whether cause exists for modifying, revoking and reissuing, or terminating this Order or to determine compliance with this Order. Upon request, the Discharger shall also furnish to the Central Valley Water Board, State Water Board, or U.S. EPA copies of records required to be kept by this Order. (40 CFR § 122.41(h); Wat. Code, § 13267.)

B. Signatory and Certification Requirements

1. All applications, reports, or information submitted to the Central Valley Water Board, State Water Board, and/or U.S. EPA shall be signed and certified in accordance with Standard Provisions – Reporting V.B.2, V.B.3, V.B.4, and V.B.5 below. (40 CFR § 122.41(k).)

2. All permit applications shall be signed by either a principal executive officer or ranking elected official. For purposes of this provision, a principal executive officer of a federal agency includes: (i) the chief executive officer of the agency, or (ii) a senior executive officer having responsibility for the overall operations of a principal geographic unit of the agency (e.g., Regional Administrators of U.S. EPA). (40 CFR § 122.22(a)(3).).

3. All reports required by this Order and other information requested by the Central Valley Water Board, State Water Board, or U.S. EPA shall be signed by a person described in Standard Provisions – Reporting V.B.2 above, or by a duly authorized representative of that person. A person is a duly authorized representative only if:

   a. The authorization is made in writing by a person described in Standard Provisions – Reporting V.B.2 above (40 CFR § 122.22(b)(1));

   b. The authorization specifies either an individual or a position having responsibility for the overall operation of the regulated facility or activity such as the position of plant manager, operator of a well or a well field, superintendent, position of equivalent responsibility, or an individual or position having overall responsibility for environmental matters for the company. (A duly authorized representative may thus be either a named individual or any individual occupying a named position.) (40 CFR § 122.22(b)(2)); and

   c. The written authorization is submitted to the Central Valley Water Board and State Water Board. (40 CFR § 122.22(b)(3).)

4. If an authorization under Standard Provisions – Reporting V.B.3 above is no longer accurate because a different individual or position has responsibility for the overall operation of the facility, a new authorization satisfying the requirements of Standard Provisions – Reporting V.B.3 above must be submitted to the Central Valley Water Board and State Water Board prior to or together with any reports, information, or applications, to be signed by an authorized representative. (40 CFR § 122.22(c).)

5. Any person signing a document under Standard Provisions – Reporting V.B.2 or V.B.3 above shall make the following certification:

   "I certify under penalty of law that this document and all attachments were prepared under my direction or supervision in accordance with a system designed to assure that qualified personnel properly gather and evaluate the information submitted. Based on my inquiry of the person or persons who manage the system or those persons directly responsible for gathering the information, the information submitted is, to the best of my knowledge and belief, true, accurate, and complete. I am aware that there are significant penalties for submitting false information, including the possibility of fine and imprisonment for knowing violations." (40 CFR § 122.22(d).)

C. Monitoring Reports

1. Monitoring results shall be reported at the intervals specified in the Monitoring and Reporting Program (Attachment E) in this Order. (40 CFR § 122.41(l)(4).)

2. Monitoring results must be reported on a Discharge Monitoring Report (DMR) form or forms provided or specified by the Central Valley Water Board or State Water Board for reporting results of monitoring of sludge use or disposal practices. (40 CFR § 122.41(l)(4)(i).)

3. If the Discharger monitors any pollutant more frequently than required by this Order using test procedures approved under 40 CFR part 136, or another method required for an industry-specific waste stream under 40 CFR subchapters N or O, the results of such monitoring shall be included in the calculation and reporting of the data submitted in the DMR or sludge reporting form specified by the Central Valley Water Board. (40 CFR § 122.41(l)(4)(ii).)

4. Calculations for all limitations, which require averaging of measurements, shall utilize an arithmetic mean unless otherwise specified in this Order. (40 CFR § 122.41(l)(4)(iii).)

D. Compliance Schedules

Reports of compliance or noncompliance with, or any progress reports on, interim and final requirements contained in any compliance schedule of this Order, shall be submitted no later than 14 days following each schedule date. (40 CFR § 122.41(l)(5).)

E. Twenty-Four Hour Reporting

1. The Discharger shall report any noncompliance that may endanger health or the environment. Any information shall be provided orally within 24 hours from the time the Discharger becomes aware of the circumstances. A written submission shall also be provided within five (5) days of the time the Discharger becomes aware of the circumstances. The written submission shall contain a description of the noncompliance and its cause; the period of noncompliance, including exact dates and times, and if the noncompliance has not been corrected, the anticipated time it is expected to continue; and steps taken or planned to reduce, eliminate, and prevent reoccurrence of the noncompliance. (40 CFR § 122.41(l)(6)(i).)

2. The following shall be included as information that must be reported within 24 hours under this paragraph (40 CFR § 122.41(l)(6)(ii)):

   a. Any unanticipated bypass that exceeds any effluent limitation in this Order. (40 CFR § 122.41(l)(6)(ii)(A).)

   b. Any upset that exceeds any effluent limitation in this Order. (40 CFR § 122.41(l)(6)(ii)(B).)

3. The Central Valley Water Board may waive the above-required written report under this provision on a case-by-case basis if an oral report has been received within 24 hours. (40 CFR § 122.41(l)(6)(iii).)

F. Planned Changes

The Discharger shall give notice to the Central Valley Water Board as soon as possible of any planned physical alterations or additions to the permitted facility. Notice is required under this provision only when (40 CFR § 122.41(l)(1)):

1. The alteration or addition to a permitted facility may meet one of the criteria for determining whether a facility is a new source in section 122.29(b) (40 CFR § 122.41(l)(1)(i)); or

2. The alteration or addition results in a significant change in the Discharger's sludge use or disposal practices, and such alteration, addition, or change may justify the application of permit conditions that are different from or absent in the existing permit, including

notification of additional use or disposal sites not reported during the permit application process or not reported pursuant to an approved land application plan. (40 CFR§ 122.41(l)(1)(iii).)

G. Anticipated Noncompliance

The Discharger shall give advance notice to the Central Valley Water Board or State Water Board of any planned changes in the permitted facility or activity that may result in noncompliance with this Order's requirements. (40 CFR § 122.41(l)(2).)

H. Other Noncompliance

The Discharger shall report all instances of noncompliance not reported under Standard Provisions – Reporting V.C, V.D, and V.E above at the time monitoring reports are submitted. The reports shall contain the information listed in Standard Provision – Reporting V.E above. (40 CFR § 122.41(l)(7).)

I. Other Information

When the Discharger becomes aware that it failed to submit any relevant facts in a permit application, or submitted incorrect information in a permit application or in any report to the Central Valley Water Board, State Water Board, or U.S. EPA, the Discharger shall promptly submit such facts or information. (40 CFR § 122.41(l)(8).)

VI. STANDARD PROVISIONS – ENFORCEMENT

A. The Central Valley Water Board is authorized to enforce the terms of this permit under several provisions of the Water Code, including, but not limited to, sections 13385, 13386, and 13387.

VII. ADDITIONAL PROVISIONS – NOTIFICATION LEVELS

A. Publicly-Owned Treatment Works (POTWs)

All POTWs shall provide adequate notice to the Central Valley Water Board of the following (40 CFR § 122.42(b)):

1. Any new introduction of pollutants into the POTW from an indirect discharger that would be subject to sections 301 or 306 of the CWA if it were directly discharging those pollutants (40 CFR § 122.42(b)(1)); and
2. Any substantial change in the volume or character of pollutants being introduced into that POTW by a source introducing pollutants into the POTW at the time of adoption of the Order. (40 CFR § 122.42(b)(2).)
3. Adequate notice shall include information on the quality and quantity of effluent introduced into the POTW as well as any anticipated impact of the change on the quantity or quality of effluent to be discharged from the POTW. (40 CFR § 122.42(b)(3).)

ATTACHMENT E – MONITORING AND REPORTING PROGRAM

Contents

I. General Monitoring Provisions E-2
II. Monitoring Locations E-3
III. Influent Monitoring Requirements E-4
A. Monitoring Location INF-001 ....E-4
IV. Effluent Monitoring Requirements E-4
A. Monitoring Location EFF-001 ....E-4
V. Whole Effluent Toxicity Testing Requirements E-5
VI. Land Discharge Monitoring Requirements – Not Applicable E-8
VII. Recycling Monitoring Requirements – Not Applicable E-8
VIII. Receiving Water Monitoring Requirements E-8
A. Monitoring Locations RSW-001 and RSW-002 ....E-9
IX. Other Monitoring Requirements E-10
A. Biosolids E-10
B. Municipal Water Supply E-10
C. Ultraviolet Light (UV) Disinfection System E-11
D. Effluent and Receiving Water Characterization E-11
X. Reporting Requirements E-15
A. General Monitoring and Reporting Requirements E-15
B. Self-Monitoring Reports (SMR's) E-16
C. Discharge Monitoring Reports (DMR's) – Not Applicable E-19
D. Other Reports E-19

Tables

Table E-1. Monitoring Station Locations E-3
Table E-2. Influent Monitoring E-4
Table E-3. Effluent Monitoring E-4
Table E-4. Chronic Toxicity Testing Dilution Series E-7
Table E-5. Receiving Water Monitoring Requirements – Monitoring Locations RSW-001 and RSW-002 ....E-9
Table E-6. Municipal Water Supply Monitoring Requirements – Monitoring Location SPL-001 ....E-10
Table E-7. Ultraviolet Light Disinfection System Monitoring Requirements – Monitoring Locations UVS-001 and UVS-002 ....E-11
Table E-8. Effluent and Receiving Water Characterization Monitoring E-12
Table E-9. Monitoring Periods and Reporting Schedule E-16
Table E-10. Reporting Requirements for Special Provisions Reports E-19

ATTACHMENT E – MONITORING AND REPORTING PROGRAM (MRP)

The Code of Federal Regulations (40 CFR § 122.48) requires that all NPDES permits specify monitoring and reporting requirements. Water Code sections 13267 and 13383 also authorize the Central Valley Water Board to require technical and monitoring reports. This MRP establishes monitoring and reporting requirements that implement federal and California regulations.

I. GENERAL MONITORING PROVISIONS

A. Samples and measurements taken as required herein shall be representative of the volume and nature of the monitored discharge. All samples shall be taken at the monitoring locations specified below and, unless otherwise specified, before the monitored flow joins or is diluted by any other waste stream, body of water, or substance. Monitoring locations shall not be changed without notification to and the approval of the Central Valley Water Board.

B. Effluent samples shall be taken downstream of the last addition of wastes to the treatment or discharge works where a representative sample may be obtained prior to mixing with the receiving waters. Samples shall be collected at such a point and in such a manner to ensure a representative sample of the discharge.

C. Chemical, bacteriological, and bioassay analyses of any material required by this Order shall be conducted by a laboratory certified for such analyses by the Department of Public Health (DPH). Laboratories that perform sample analyses must be identified in all monitoring reports submitted to the Central Valley Water Board. In the event a certified laboratory is not available to the Discharger for any onsite field measurements such as pH, dissolved oxygen (DO), turbidity, temperature, and residual chlorine, such analyses performed by a noncertified laboratory will be accepted provided a Quality Assurance-Quality Control Program is instituted by the laboratory. A manual containing the steps followed in this program for any onsite field measurements such as pH, DO, turbidity, temperature, and residual chlorine must be kept onsite in the treatment facility laboratory and shall be available for inspection by Central Valley Water Board staff. The Discharger must demonstrate sufficient capability (qualified and trained employees, properly calibrated and maintained field instruments, etc.) to adequately perform these field measurements. The Quality Assurance-Quality Control Program must conform to USEPA guidelines or to procedures approved by the Central Valley Water Board.

D. Appropriate flow measurement devices and methods consistent with accepted scientific practices shall be selected and used to ensure the accuracy and reliability of measurements of the volume of monitored discharges. All monitoring instruments and devices used by the Discharger to fulfill the prescribed monitoring program shall be properly maintained and calibrated as necessary, at least yearly, to ensure their continued accuracy. All flow measurement devices shall be calibrated at least once per year to ensure continued accuracy of the devices.

E. Monitoring results, including noncompliance, shall be reported at intervals and in a manner specified in this Monitoring and Reporting Program.

F. Laboratories analyzing monitoring samples shall be certified by DPH, in accordance with the provision of Water Code section 13176, and must include quality assurance/quality control data with their reports.

G. The Discharger shall conduct analysis on any sample provided by USEPA as part of the Discharge Monitoring Quality Assurance (DMQA) program. The results of any such analysis shall be submitted to USEPA's DMQA manager.

H. The Discharger shall file with the Central Valley Water Board technical reports on self-monitoring performed according to the detailed specifications contained in this Monitoring and Reporting Program.

I. The results of all monitoring required by this Order shall be reported to the Central Valley Water Board, and shall be submitted in such a format as to allow direct comparison with the limitations and requirements of this Order. Unless otherwise specified, discharge flows shall be reported in terms of the monthly average and the daily maximum discharge flows.

II. MONITORING LOCATIONS

The Discharger shall establish the following monitoring locations to demonstrate compliance with the effluent limitations, discharge specifications, and other requirements in this Order:

Table E-1. Monitoring Station Locations

Discharge Point Name	Monitoring Location Name	Monitoring Location Description
--	INF-001	A location where a representative sample of the influent into the Facility can be collected prior to any plant return flows or treatment processes.
001	EFF-001	A location where a representative sample of the effluent from the Facility can be collected downstream from the last connection through which wastes can be admitted to the outfall. Latitude: 37° 45’ 02” N Longitude: 121° 19’ 35” W
--	RSW-001	In Deuel Drain, 3080 feet upstream from the point of discharge of Discharge Point 001.
--	RSW-002	In Deuel Drain, 450 feet downstream from the point of discharge of Discharge Point 001.
--	RSW-003	In Paradise Cut, 900 feet east of the confluence with Deuel Drain.
--	BIO-001	A location where a representative sample of biosolids can be obtained.
--	SPL-001	A location where a representative sample of the municipal water can be obtained.
--	UVS-001	A location where a representative sample of wastewater can be collected immediately before entering the ultraviolet light (UV) disinfection system.
	UVS-002	A location where a representative sample of wastewater can be collected immediately downstream of the UV disinfection system.

The North latitude and West longitude information in Table E-1 are approximate for administrative purposes.

III. INFLUENT MONITORING REQUIREMENTS

A. Monitoring Location INF-001

1. The Discharger shall monitor influent to the Facility at Monitoring Location INF-001 as follows:

Table E-2. Influent Monitoring

Parameter	Units	Sample Type	Minimum Sampling Frequency	Required Analytical Test Method
Flow	MGD	Meter	Continuous	--
Conventional Pollutants				
Biochemical Oxygen Demand (5-day @ 20°C)	mg/L	24-hr Composite[1]	1/Week	[2]
Total Suspended Solids	mg/L	24-hr Composite[1]	1/Week	[2]
Non-Conventional Pollutants				
Electrical Conductivity @ 25ºC	µmhos/cm	Grab[3]	1/Month	[2]
Total Dissolved Solids	mg/L	Grab[3]	1/Month	[2]

[1] 24-hour flow proportional composite.
[2] Pollutants shall be analyzed using the analytical methods described in 40 CFR Part 136; or by methods approved by the Central Valley Water Board or the State Water Board.
[3] Grab samples shall not be collected at the same time each day to get a complete representation of variations in the influent.

IV. EFFLUENT MONITORING REQUIREMENTS

A. Monitoring Location EFF-001

1. The Discharger shall monitor treated wastewater at Monitoring Location EFF-001 as follows. If more than one analytical test method is listed for a given parameter, the Discharger must select from the listed methods and corresponding Minimum Level:

Table E-3. Effluent Monitoring

Parameter	Units	Sample Type	Minimum Sampling Frequency	Required Analytical Test Method
Flow	MGD	Meter	Continuous	--
Conventional Pollutants				
Biochemical Oxygen Demand (5-day @ 20˚C)	mg/L	24-hr Composite[1]	1/Week	[2]
	lbs/day	Calculate	1/Week	--
pH	standard units	Grab	1/Week[3,4]	[2]
Total Suspended Solids	mg/L	24-hr Composite[1]	1/Week	[2]
	lbs/day	Calculate	1/Week	--
Priority Pollutants				
Copper, Total Recoverable	µg/L	Grab	1/Month	[2,5]
Cyanide, Total (as CN)	µg/L	Grab	1/Month	[2,5]
Mercury, Total Recoverable	ng/L	Grab	1/Month	[2,5,6]
Non-Conventional Pollutants				
Ammonia Nitrogen, Total	mg/L	Grab	1/Week[3,7]	[2]

Parameter	Units	Sample Type	Minimum Sampling Frequency	Required Analytical Test Method
(as N)	lbs/day	Calculate	1/Week	[2]
Chloride	mg/L	Grab	2/Year[8]	[2]
Chlorine, Total Residual	mg/L	Meter	1/Day[9]	[2]
Chlorpyrifos	µg/L	Grab	1/Year	[2]
Diazinon	µg/L	Grab	1/Year	[2]
Electrical Conductivity @ 25°C	µmhos/cm	Grab	1/Month	[2]
Hardness, Total (as $CaCO_3$)	mg/L	Grab	1/Month[10]	[2]
Mercury (methyl)	ng/L	Grab	1/Month	[2, 6]
Nitrite Nitrogen, Total (as N)	mg/L	Grab	1/Month	[2]
Nitrate plus Nitrite (as N)	mg/L	Grab	1/Month	[2]
Temperature	°F	Grab	1/Week[3,4]	[2]
Total Dissolved Solids	mg/L	Grab	2/Year[8]	[2]

[1] 24-hour flow proportional composite.
[2] Pollutants shall be analyzed using the analytical methods described in 40 CFR Part 136 or by methods approved by the Central Valley Water Board or the State Water Board.
[3] pH and temperature shall be recorded at the time of ammonia sample collection.
[4] A hand-held field meter may be used, provided the meter utilizes a USEPA-approved algorithm/method and is calibrated and maintained in accordance with the manufacturer's instructions. A calibration and maintenance log for each meter used for monitoring required by this Monitoring and Reporting Program shall be maintained at the Facility.
[5] For priority pollutant constituents the reporting level shall be consistent with Sections 2.4.2 and 2.4.3 of the *Policy for Implementation of Toxics Standards for Inland Surface Waters, Enclosed Bays, and Estuaries of California* (See Table E-8).
[6] Unfiltered methyl mercury and total mercury samples shall be taken using clean hands/dirty hands procedures, as described in U.S. EPA method 1669: Sampling Ambient Water for Trace Metals at EPA Water Quality Criteria Levels, for collection of equipment blanks (section 9.4.4.2), and shall be analyzed by U.S. EPA method 1630/1631 (Revision E) with a reporting level of 0.05 ng/L for methyl mercury and 0.5 ng/L for total mercury.
[7] Concurrent with whole effluent toxicity monitoring.
[8] Monitoring shall be conducted twice per year, once during the dry season (April through October) and once during the wet season (November through March).
[9] Monitoring for total residual chlorine only required when cleaning the membrane bioreactor filters. Total chlorine residual must be monitored with a method sensitive to and accurate at the permitted level of 0.01 mg/L.
[10] Hardness samples shall be collected concurrently with metals samples.

V. WHOLE EFFLUENT TOXICITY TESTING REQUIREMENTS

A. Acute Toxicity Testing. The Discharger shall conduct acute toxicity testing to determine whether the effluent is contributing acute toxicity to the receiving water. The Discharger shall meet the following acute toxicity testing requirements:

1. *Monitoring Frequency* – The Discharger shall perform quarterly acute toxicity testing, concurrent with effluent ammonia sampling.

2. *Sample Types* – The Discharger may use flow-through or static renewal testing. For static renewal testing, the samples shall be grab samples and shall be representative of

the volume and quality of the discharge. The effluent samples shall be taken at Monitoring Location EFF-001.

3. *Test Species* – Test species shall be fathead minnows (*Pimephales promelas*).

4. *Methods* – The acute toxicity testing samples shall be analyzed using EPA-821-R-02-012, Fifth Edition. Temperature, total residual chlorine, and pH shall be recorded at the time of sample collection. No pH adjustment may be made unless approved by the Executive Officer.

5. *Test Failure* – If an acute toxicity test does not meet all test acceptability criteria, as specified in the test method, the Discharger must re-sample and re-test as soon as possible, not to exceed 7 days following notification of test failure.

B. Chronic Toxicity Testing. The Discharger shall conduct three species chronic toxicity testing to determine whether the effluent is contributing chronic toxicity to the receiving water. The Discharger shall meet the following chronic toxicity testing requirements:

1. *Monitoring Frequency* – The Discharger shall perform quarterly three species chronic toxicity testing.

2. *Sample Types* – Effluent samples shall be flow proportional 24-hour composites and shall be representative of the volume and quality of the discharge. The effluent samples shall be taken at Monitoring Location EFF-001.

3. *Sample Volumes* – Adequate sample volumes shall be collected to provide renewal water to complete the test in the event that the discharge is intermittent.

4. *Test Species* – Chronic toxicity testing measures sublethal (e.g., reduced growth, reproduction) and/or lethal effects to test organisms exposed to an effluent compared to that of the control organisms. The Discharger shall conduct chronic toxicity tests with:

   - The cladoceran, water flea, *Ceriodaphnia dubia* (survival and reproduction test);
   - The fathead minnow, *Pimephales promelas* (larval survival and growth test); and
   - The green alga, *Selenastrum capricornutum* (growth test).

5. Methods – The presence of chronic toxicity shall be estimated as specified in *Short-term Methods for Estimating the Chronic Toxicity of Effluents and Receiving Waters to Freshwater Organisms*, Fourth Edition, EPA/821-R-02-013, October 2002.

6. *Reference Toxicant* – As required by the SIP, all chronic toxicity tests shall be conducted with concurrent testing with a reference toxicant and shall be reported with the chronic toxicity test results.

7. *Dilutions* – For routine and accelerated chronic toxicity monitoring, it is not necessary to perform the test using a dilution series. The chronic toxicity testing may be performed using 100% effluent and one control. For the TRE monitoring, the chronic toxicity testing shall be performed using the dilution series identified in Table E-4, below, unless an alternative dilution series is detailed in the submitted TRE Action Plan. A receiving water control or laboratory water control may be used as the diluent.

Table E-4. Chronic Toxicity Testing Dilution Series

Sample	Dilutions[a] (%)					Control
	100	75	50	25	12.5	
% Effluent	100	75	50	25	12.5	0
% Control Water	0	25	50	75	87.5	100

[a] Receiving water control or laboratory water control may be used as the diluent.

8. *Test Failure* – The Discharger must re-sample and re-test as soon as possible, but no later than fourteen (14) days after receiving notification of a test failure. A test failure is defined as follows:

   a. The reference toxicant test or the effluent test does not meet all test acceptability criteria as specified in the Short-term Methods for Estimating the Chronic Toxicity of Effluents and Receiving Waters to Freshwater Organisms, Fourth Edition, EPA/821-R-02-013, October 2002 (Method Manual), and its subsequent amendments or revisions; or

   b. The percent minimum significant difference (PMSD) measured for the test exceeds the upper PMSD bound variability criterion in Table 6 on page 52 of the Method Manual. (A retest is only required in this case if the test results do not exceed the monitoring trigger specified in the Special Provision at section VI.C.2.a.iii. of the Order.)

C. WET Testing Notification Requirements. The Discharger shall notify the Central Valley Water Board within 24-hours after the receipt of test results exceeding the monitoring trigger during regular or accelerated monitoring, or an exceedance of the acute toxicity effluent limitation.

D. WET Testing Reporting Requirements. All toxicity test reports shall include the contracting laboratory's complete report provided to the Discharger and shall be in accordance with the appropriate "Report Preparation and Test Review" sections of the method manuals. At a minimum, whole effluent toxicity monitoring shall be reported as follows:

1. **Chronic WET Reporting**. Regular chronic toxicity monitoring results shall be reported to the Central Valley Water Board within 30 days following completion of the test, and shall contain, at minimum:

   a. The results expressed in TUc, measured as 100/NOEC, and also measured as 100/LC50, 100/EC25, 100/IC25, and 100/IC50, as appropriate.

   b. The statistical methods used to calculate endpoints;

   c. The statistical output page, which includes the calculation of the percent minimum significant difference (PMSD);

   d. The dates of sample collection and initiation of each toxicity test; and

   e. The results compared to the numeric toxicity monitoring trigger.

   Additionally, the monthly discharger self-monitoring reports shall contain an updated chronology of chronic toxicity test results expressed in TUc, and organized by test species, type of test (survival, growth or reproduction), and monitoring frequency, i.e., either quarterly, monthly, accelerated, or Toxicity Reduction Evaluation (TRE).

2. **Acute WET Reporting.** Acute toxicity test results shall be submitted with the monthly discharger self-monitoring reports and reported as percent survival.

3. **TRE Reporting.** Reports for TREs shall be submitted in accordance with the schedule contained in the Discharger's approved TRE Workplan, or as amended by the Discharger's TRE Action Plan.

4. **Quality Assurance (QA).** The Discharger must provide the following information for QA purposes:

   a. Results of the applicable reference toxicant data with the statistical output page giving the species, NOEC, LOEC, type of toxicant, dilution water used, concentrations used, PMSD, and dates tested.

   b. The reference toxicant control charts for each endpoint, which include summaries of reference toxicant tests performed by the contracting laboratory.

   c. Any information on deviations or problems encountered and how they were dealt with.

VI. LAND DISCHARGE MONITORING REQUIREMENTS – NOT APPLICABLE

VII. RECYCLING MONITORING REQUIREMENTS – NOT APPLICABLE

VIII. RECEIVING WATER MONITORING REQUIREMENTS

The Discharger shall implement the Receiving Water Monitoring Requirements in Attachment E, Sections VIII.A.1 and VIII.A.2 of this Order. However, in lieu of conducting the individual monitoring specified in Attachment E, Sections VIII.A.1 and VIII.A.2 of this Order (including visual observations), the Discharger may elect to participate in the Delta Regional Monitoring Program. [1] The Discharger may choose to conduct all or part of the receiving water monitoring through the Delta Regional Monitoring Program. If the Discharger elects to cease all or part of the individual receiving water monitoring and instead participates in the Delta Regional Monitoring Program, the Discharger shall submit a letter signed by an authorized representative informing the Board that the Discharger will participate in the Delta Regional Monitoring Program, and the date on which individual receiving water monitoring required under Attachment E, Sections VIII.A.1 and VIII.A.2 will cease, or be modified, and specific monitoring locations and constituent combinations that will no longer be conducted individually. Written approval of the Discharger's request, by the Executive Officer, is required prior to discontinuing part or all of individual receiving water monitoring. Approval by the Executive Officer is not required prior to participating in the Delta Regional Monitoring Program.

If the Discharger participates in the Delta Regional Monitoring Program in lieu of conducting individual receiving water monitoring, the Discharger shall continue to participate in the Delta Regional Monitoring Program until such time as the Discharger informs the Board that participation in the Delta RMP will cease and individual monitoring is reinstituted. Receiving water monitoring under Attachment E, Sections VIII.A.1 and VIII.A.2, is not required under this Order so long as the Discharger adequately supports the Delta Regional Monitoring Program. If the Discharger fails to adequately support the Delta Regional Monitoring Program, as defined by the Delta RMP Steering Committee, the Discharger shall reinstitute individual receiving water monitoring under Attachment E, Sections VIII.A.1 and VIII.A.2, upon written notice from the Executive Officer. During participation in the Delta RMP, the Discharger may- conduct and submit any or part of the

[1] If the Discharger elects to participate in the Delta RMP, it shall continue to submit receiving water data for temperature. At minimum, one representative upstream receiving water temperature sample shall be submitted annually for the month of January. The temperature data shall be submitted in the January self-monitoring report and will be used to determine compliance with the temperature effluent limitation. Temperature data may be collected by the Discharger for this purpose or the Discharger may submit representative temperature data from the Delta RMP or other appropriate monitoring programs (e.g., Department of Water Resources, United States Geological Survey, etc.).

receiving water monitoring included in this Monitoring and Reporting Program that is deemed appropriate by the Discharger.

Delta RMP data is not intended to be used directly to represent either upstream or downstream water quality for purposes of determining compliance with this Permit. Delta RMP monitoring stations are established generally as “integrator sites” to evaluate the combined impacts on water quality of multiple discharges into the Delta; Delta RMP monitoring stations would not normally be able to identify the source of any specific constituent, but would be used to identify water quality issues needing further evaluation. Delta RMP monitoring data, along with individual Discharger data, may be used to help establish background receiving water quality for Reasonable Potential analyses in an NPDES Permit after evaluation of the applicability of the data for that purpose. Delta RMP data, as with all environmental monitoring data, can provide an assessment of water quality at a specific place and time that can be used in conjunction with other information, such as other receiving water monitoring data, spatial and temporal distribution and trends of receiving water data, effluent data from the Discharger’s discharge and other point and non-point source discharges, receiving water flow volume, speed and direction, and other information to determine the likely source or sources of a constituent that resulted in exceedance of a receiving water quality objective.

During the period of participation in the Delta Regional Monitoring Program, the Discharger shall continue to report any individually conducted receiving water monitoring data in the Electronic Self-Monitoring Reports (eSMR) according to the Monitoring and Reporting Program. In addition- 1) with each submitted eSMR, the Discharger’s eSMR cover letter shall state that the Discharger is participating in the Delta Regional Monitoring Program in lieu of conducting the individual receiving water monitoring program required by the permit, and 2) with each annual report, the Discharger shall attach a copy of the letter originally submitted to the Central Valley Water Board describing the monitoring location(s) and constituent combinations that will no longer be conducted individually.

A. Monitoring Locations RSW-001 and RSW-002

1. The Discharger shall monitor Deuel Drain at Monitoring Locations RSW-001 and RSW-002 as follows:

Table E-5. Receiving Water Monitoring Requirements – Monitoring Locations RSW-001 and RSW-002

Parameter	Units	Sample Type	Minimum Sampling Frequency	Required Analytical Test Method
Conventional Pollutants				
pH	standard units	Grab	1/Month	[1]
Non-Conventional Pollutants				
Dissolved Oxygen	mg/L	Grab	1/Month	[1]
Electrical Conductivity @ 25ºC	µmhos/cm	Grab	1/Month	[1]
Temperature	ºF	Grab	1/Month	[1]
Total Dissolved Solids	mg/L	Grab	1/Month	[1]
Turbidity	NTU	Grab	1/Month	[1]

[1] Pollutants shall be analyzed using the analytical methods described in 40 CFR Part 136 or by methods approved by the Central Valley Water Board or the State Water Board.

2. In conducting the receiving water sampling, a log shall be kept of the receiving water conditions throughout the reach bounded by Monitoring Locations RSW-001 and RSW-002. Attention shall be given to the presence or absence of:

   a. Floating or suspended matter;
   b. Discoloration;
   c. Bottom deposits;
   d. Aquatic life;
   e. Visible films, sheens, or coatings;
   f. Fungi, slimes, or objectionable growths; and
   g. Potential nuisance conditions (e.g. foam).

   Notes on receiving water conditions shall be summarized in the monitoring report.

IX. OTHER MONITORING REQUIREMENTS

A. Biosolids

1. Monitoring Location BIO-001

a. A composite sample of sludge shall be collected annually at Monitoring Location BIO-001 in accordance with EPA's *POTW Sludge Sampling and Analysis Guidance Document*, August 1989, and tested for Title 22 metals.

b. Biosolids monitoring shall be conducted using the methods in Test Methods for Evaluating Solid Waste, Physical/Chemical Methods (EPA publication SW-846), as required in 40 CFR 503.8(b)(4). All results must be reported on a 100% dry weight basis. Records of all analyses must state on each page of the laboratory report whether the results are expressed as “100% dry weight” or “as is.”

c. Sampling records shall be retained for a minimum of **5 years**. A log shall be maintained of sludge quantities generated and of handling and disposal activities. The frequency of entries is discretionary; however, the log must be complete enough to serve as a basis for part of the annual report.

B. Municipal Water Supply

1. Monitoring Location SPL-001

The Discharger shall monitor the municipal water supply at Monitoring Location SPL-001 as follows.

Table E-6. Municipal Water Supply Monitoring Requirements – Monitoring Location SPL-001

Parameter	Units	Sample Type	Minimum Sampling Frequency	Required Analytical Test Method
Non-Conventional Pollutants				
Electrical Conductivity @ 25°C[1]	µmhos/cm	Grab	1/Month	[2]
Total Dissolved Solids[1]	mg/L	Grab	1/Month	[2]

[1] If the water supply is from more than one source, the total dissolved solids and electrical conductivity shall be reported as a weighted average and include copies of supporting calculations.

[2] Pollutants shall be analyzed using the analytical methods described in 40 CFR Part 136 or by methods approved by the Central Valley Water Board or State Water Board.

C. Ultraviolet Light (UV) Disinfection System

1. Monitoring Locations UVS-001 and UVS-002

The Discharger shall monitor the UV disinfection system at Monitoring Locations UVS-001 and UVS-002 as follows:

Table E-7. Ultraviolet Light Disinfection System Monitoring Requirements – Monitoring Locations UVS-001 and UVS-002

Parameter	Units	Sample Type	Monitoring Location	Minimum Sampling Frequency
Flow	MGD	Meter	UVS-002	Continuous[1]
Turbidity	NTU	Meter	UVS-001	Continuous[1,2]
Number of UV banks in operation	Number	Observation	N/A	Continuous[1]
UV Transmittance	Percent (%)	Meter	UVS-001	Continuous[1]
UV Dose[3]	mJ/cm^2	Calculated	N/A	Continuous[1]
Total Coliform Organisms	MPN/100 mL	Grab	UVS-002	1/Week

[1] For continuous analyzers, the Discharger shall report documented routine meter maintenance activities including date, time of day, and duration, in which the analyzer(s) is not in operation. If analyzer(s) fail to provide continuous monitoring for more than two hours and influent and/or effluent from the disinfection process is not diverted for retreatment, the Discharger shall obtain and report hourly manual and/or grab sample results. The Discharger shall not decrease power settings or reduce the number of UV lamp banks in operation while the continuous analyzers are out of service and water is being disinfected.

[2] Report daily average and maximum turbidity.

[3] Report daily minimum hourly average UV dose and daily average UV dose. The minimum hourly average dose shall consist of lowest hourly average dose provided in any channel that had at least one bank of lamps operating during the hour interval. For channels that did not operate for the entire hour interval, the dose will be averaged based on the actual operation time.

D. Effluent and Receiving Water Characterization

If the Discharger is participating in the Delta Regional Monitoring Program as described in Attachment E, Section VIII above, the Receiving Water portion of this Characterization Monitoring is not required. However, the Report of Waste Discharge for the next permit renewal shall include, at minimum, one representative ambient background characterization monitoring event for priority pollutant constituents during the term of the permit. Data from the Delta Regional Monitoring Program may be utilized to characterize the receiving water in the permit renewal. The Discharger may request that the RMP perform sampling and laboratory analysis to address all or a portion of the monitoring under this Characterization Monitoring with the understanding that the Discharger will provide funding to the RMP sufficient to reimburse all of the costs of this additional effort. Alternatively, the Discharger may conduct any site-specific receiving water monitoring deemed appropriate by the Discharger and submit that monitoring data with this Characterization Monitoring. In general, monitoring data from samples collected in the immediate vicinity of the discharge will be given greater weight in permitting decisions than receiving water monitoring data collected at greater distances from the discharge point.

1. **Quarterly Monitoring**. Quarterly samples shall be collected from the effluent and upstream receiving water (EFF-001 and RSW-003) and analyzed for the constituents listed in Table E-8, below. Quarterly monitoring shall be conducted during 2016 (4 consecutive samples, evenly distributed throughout the year) and the results of such monitoring be submitted to the Central Valley Water Board with the monthly

self-monitoring reports. Each individual monitoring event shall provide representative sample results for the effluent and upstream receiving water.

2. **Concurrent Sampling.** Effluent and receiving water sampling shall be performed at approximately the same time, on the same date.

3. **Sample Type.** All receiving water samples shall be taken as grab samples. Effluent samples shall be taken as described in Table E-8, below.

Table E-8. Effluent and Receiving Water Characterization Monitoring

Parameter	Units	Effluent Sample Type	Maximum Reporting Level[1]
2- Chloroethyl vinyl ether	µg/L	Grab	1
Chloroform	µg/L	Grab	2
Chloromethane	µg/L	Grab	2
Dibromochloromethane	µg/L	Grab	0.5
Dichlorobromomethane	µg/L	Grab	0.5
Dichloromethane	µg/L	Grab	2
Ethylbenzene	µg/L	Grab	2
Hexachlorobenzene	µg/L	Grab	1
Hexachlorobutadiene	µg/L	Grab	1
Hexachloroethane	µg/L	Grab	1
Naphthalene	µg/L	Grab	10
Tetrachloroethene	µg/L	Grab	0.5
Toluene	µg/L	Grab	2
trans-1,2-Dichloroethylene	µg/L	Grab	1
Trichloroethene	µg/L	Grab	2
Vinyl chloride	µg/L	Grab	0.5
Methyl-tert-butyl ether (MTBE)	µg/L	Grab	
Trichlorofluoromethane	µg/L	Grab	
1,1,2-Trichloro-1,2,2-Trifluoroethane	µg/L	Grab	
Styrene	µg/L	Grab	
Xylenes	µg/L	Grab	
1,2-Benzanthracene	µg/L	Grab	5
1,2-Diphenylhydrazine	µg/L	Grab	1
2-Chlorophenol	µg/L	Grab	5
2,4-Dichlorophenol	µg/L	Grab	5
2,4-Dimethylphenol	µg/L	Grab	2
2,4-Dinitrophenol	µg/L	Grab	5
2,4-Dinitrotoluene	µg/L	Grab	5
2,4,6-Trichlorophenol	µg/L	Grab	10
2,6-Dinitrotoluene	µg/L	Grab	5
2-Nitrophenol	µg/L	Grab	10
2-Chloronaphthalene	µg/L	Grab	10
3,3'-Dichlorobenzidine	µg/L	Grab	5
3,4-Benzofluoranthene	µg/L	Grab	10
4-Chloro-3-methylphenol	µg/L	Grab	5
4,6-Dinitro-2-methylphenol	µg/L	Grab	10
4-Nitrophenol	µg/L	Grab	10
4-Bromophenyl phenyl ether	µg/L	Grab	10
4-Chlorophenyl phenyl ether	µg/L	Grab	5
Acenaphthene	µg/L	Grab	1

Parameter	Units	Effluent Sample Type	Maximum Reporting Level[1]
Acenaphthylene	µg/L	Grab	10
Anthracene	µg/L	Grab	10
Benzidine	µg/L	Grab	5
Benzo(a)pyrene (3,4-Benzopyrene)	µg/L	Grab	2
Benzo(g,h,i)perylene	µg/L	Grab	5
Benzo(k)fluoranthene	µg/L	Grab	2
Bis(2-chloroethoxy) methane	µg/L	Grab	5
Bis(2-chloroethyl) ether	µg/L	Grab	1
Bis(2-chloroisopropyl) ether	µg/L	Grab	10
Bis(2-ethylhexyl) phthalate	µg/L	Grab	5
Butyl benzyl phthalate	µg/L	Grab	10
Chrysene	µg/L	Grab	5
Di-n-butylphthalate	µg/L	Grab	10
Di-n-octylphthalate	µg/L	Grab	10
Dibenzo(a,h)-anthracene	µg/L	Grab	0.1
Diethyl phthalate	µg/L	Grab	10
Dimethyl phthalate	µg/L	Grab	10
Diuron	µg/L	Grab	
Fluoranthene	µg/L	Grab	10
Fluorene	µg/L	Grab	10
Hexachlorocyclopentadiene	µg/L	Grab	5
Indeno(1,2,3-c,d)pyrene	µg/L	Grab	0.05
Isophorone	µg/L	Grab	1
N-Nitrosodiphenylamine	µg/L	Grab	1
N-Nitrosodimethylamine	µg/L	Grab	5
N-Nitrosodi-n-propylamine	µg/L	Grab	5
Nitrobenzene	µg/L	Grab	10
Pentachlorophenol	µg/L	Grab	1
Phenanthrene	µg/L	Grab	5
Phenol	µg/L	Grab	1
Pyrene	µg/L	Grab	10
Aluminum	µg/L	24-hr Composite	
Antimony	µg/L	24-hr Composite	0.5
Arsenic	µg/L	24-hr Composite	1
Asbestos	µg/L	24-hr Composite	
Barium	µg/L	24-hr Composite	
Beryllium	µg/L	24-hr Composite	0.5
Cadmium	µg/L	24-hr Composite	0.25
Chromium (III)	µg/L	24-hr Composite	50
Chromium (VI)[2]	µg/L	24-hr Composite	10
Copper[2]	µg/L	24-hr Composite	0.5
Cyanide[2]	µg/L	24-hr Composite	5
Fluoride	µg/L	24-hr Composite	
Iron[2]	µg/L	24-hr Composite	
Lead	µg/L	24-hr Composite	0.5
Mercury	µg/L	Grab	0.5
Manganese	µg/L	24-hr Composite	
Molybdenum	µg/L	24-hr Composite	
Nickel	µg/L	24-hr Composite	1
Selenium	µg/L	24-hr Composite	1

Parameter	Units	Effluent Sample Type	Maximum Reporting Level[1]
Silver	µg/L	24-hr Composite	0.25
Thallium	µg/L	24-hr Composite	1
Tributyltin	µg/L	24-hr Composite	
Zinc	µg/L	24-hr Composite	1
4,4'-DDD	µg/L	24-hr Composite	0.05
4,4'-DDE	µg/L	24-hr Composite	0.05
4,4'-DDT	µg/L	24-hr Composite	0.01
alpha-Endosulfan	µg/L	24-hr Composite	0.02
alpha-Hexachlorocyclohexane (BHC)	µg/L	24-hr Composite	0.01
Alachlor	µg/L	24-hr Composite	
Aldrin	µg/L	24-hr Composite	0.005
beta-Endosulfan	µg/L	24-hr Composite	0.01
beta-Hexachlorocyclohexane	µg/L	24-hr Composite	0.005
Chlordane	µg/L	24-hr Composite	0.1
delta-Hexachlorocyclohexane	µg/L	24-hr Composite	0.005
Dieldrin	µg/L	24-hr Composite	0.01
Endosulfan sulfate	µg/L	24-hr Composite	0.05
Endrin	µg/L	24-hr Composite	0.01
Endrin Aldehyde	µg/L	24-hr Composite	0.01
Heptachlor	µg/L	24-hr Composite	0.01
Heptachlor Epoxide	µg/L	24-hr Composite	0.01
Lindane (gamma-Hexachlorocyclohexane)	µg/L	24-hr Composite	0.02
PCB-1016	µg/L	24-hr Composite	0.5
PCB-1221	µg/L	24-hr Composite	0.5
PCB-1232	µg/L	24-hr Composite	0.5
PCB-1242	µg/L	24-hr Composite	0.5
PCB-1248	µg/L	24-hr Composite	0.5
PCB-1254	µg/L	24-hr Composite	0.5
PCB-1260	µg/L	24-hr Composite	0.5
Toxaphene	µg/L	24-hr Composite	0.5
Atrazine	µg/L	24-hr Composite	
Bentazon	µg/L	24-hr Composite	
Carbofuran	µg/L	24-hr Composite	
2,4-D	µg/L	24-hr Composite	
Dalapon	µg/L	24-hr Composite	
1,2-Dibromo-3-chloropropane (DBCP)	µg/L	24-hr Composite	
Di(2-ethylhexyl)adipate	µg/L	24-hr Composite	
Dinoseb	µg/L	24-hr Composite	
Diquat	µg/L	24-hr Composite	
Endothal	µg/L	24-hr Composite	
Ethylene Dibromide	µg/L	24-hr Composite	
Glyphosate	µg/L	24-hr Composite	
Methoxychlor	µg/L	24-hr Composite	
Molinate (Ordram)	µg/L	24-hr Composite	
Oxamyl	µg/L	24-hr Composite	
Picloram	µg/L	24-hr Composite	
Simazine (Princep)	µg/L	24-hr Composite	
Thiobencarb	µg/L	24-hr Composite	

Parameter	Units	Effluent Sample Type	Maximum Reporting Level[1]
2,3,7,8-TCDD (Dioxin)	µg/L	24-hr Composite	
2,4,5-TP (Silvex)	µg/L	24-hr Composite	
Diazinon[2]	µg/L	24-hr Composite	
Chlorpyrifos[2]	µg/L	24-hr Composite	
Ammonia (as N)[2]	mg/L	24-hr Composite	
Boron	µg/L	24-hr Composite	
Chloride[2]	mg/L	24-hr Composite	
Flow[2]	MGD	Meter	
Hardness (as $CaCO_3$)[2]	mg/L	Grab	
Foaming Agents (MBAS)	µg/L	24-hr Composite	
Mercury, Methyl[2]	ng/L	Grab	
Nitrate (as N)[2]	mg/L	24-hr Composite	
Nitrite (as N)[2]	mg/L	24-hr Composite	
pH[2]	Std Units	Grab	
Phosphorus, Total (as P)	mg/L	24-hr Composite	
Specific conductance (EC)[2]	µmhos/cm	24-hr Composite	
Sulfate	mg/L	24-hr Composite	
Sulfide (as S)	mg/L	24-hr Composite	
Sulfite (as SO_3)	mg/L	24-hr Composite	
Temperature[2]	^oC	Grab	
Total Dissolved Solids (TDS)[2]	mg/L	24-hr Composite	
Total Organic Carbon	mg/L	24-hr Composite	
Dissolved Organic Carbon	mg/L	24-hr Composite	
Total Kjeldahl Nitrogen	mg/L	24-hr Composite	

[1] The reporting levels required in this table for priority pollutant constituents are established based on Section 2.4.2 and Appendix 4 of the SIP.
[2] Sampling only required at RSW-003.

X. REPORTING REQUIREMENTS

A. General Monitoring and Reporting Requirements

1. The Discharger shall comply with all Standard Provisions (Attachment D) related to monitoring, reporting, and recordkeeping.

2. Upon written request of the Central Valley Water Board, the Discharger shall submit a summary monitoring report. The report shall contain both tabular and graphical summaries of the monitoring data obtained during the previous year(s).

3. **Compliance Time Schedules.** For compliance time schedules included in the Order, the Discharger shall submit to the Central Valley Water Board, on or before each compliance due date, the specified document or a written report detailing compliance or noncompliance with the specific date and task. If noncompliance is reported, the Discharger shall state the reasons for noncompliance and include an estimate of the date when the Discharger will be in compliance. The Discharger shall notify the Central Valley Water Board by letter when it returns to compliance with the compliance time schedule.

4. The Discharger shall report to the Central Valley Water Board any toxic chemical release data it reports to the State Emergency Response Commission within 15 days of reporting

the data to the Commission pursuant to section 313 of the "Emergency Planning and Community Right to Know Act" of 1986.

B. Self-Monitoring Reports (SMR's)

1. The Discharger shall electronically submit SMR's using the State Water Board's California Integrated Water Quality System (CIWQS) Program Web site (http://www.waterboards.ca.gov/ciwqs/index.html). The CIWQS Web site will provide additional information for SMR submittal in the event there will be a planned service interruption for electronic submittal.

2. The Discharger shall report in the SMR the results for all monitoring specified in this MRP under sections III through IX. The Discharger shall submit monthly, quarterly, semiannual, and annual SMR's including the results of all required monitoring using USEPA-approved test methods or other test methods specified in this Order. SMR's are to include all new monitoring results obtained since the last SMR was submitted. If the Discharger monitors any pollutant more frequently than required by this Order, the results of this monitoring shall be included in the calculations and reporting of the data submitted in the SMR.

3. Monitoring periods and reporting for all required monitoring shall be completed according to the following schedule:

Table E-9. Monitoring Periods and Reporting Schedule

Sampling Frequency	Monitoring Period Begins On…	Monitoring Period	SMR Due Date
Continuous	Permit effective date	All	Submit with monthly SMR
1/Day	Permit effective date	(Midnight through 11:59 PM) or any 24-hour period that reasonably represents a calendar day for purposes of sampling.	Submit with monthly SMR
1/Week	Permit effective date	Sunday through Saturday	Submit with monthly SMR
2/Week	Permit effective date	Sunday through Saturday	Submit with monthly SMR
1/Month	Permit effective date	First day of calendar month through last day of calendar month	First day of second calendar month following month of sampling
1/Quarter	Permit effective date	1 January through 31 March 1 April through 30 June 1 July through 30 September 1 October through 31 December	1 May 1 August 1 November 1 February of following year
2/Year	Permit effective date	1 January through 30 June 1 July through 31 December	1 August 1 February
1/Year	Permit effective date	1 January through 31 December	1 February of following year

4. **Reporting Protocols**. The Discharger shall report with each sample result the applicable Reporting Level (RL) and the current laboratory's Method Detection Limit (MDL), as determined by the procedure in 40 CFR part 136.

The Discharger shall report the results of analytical determinations for the presence of chemical constituents in a sample using the following reporting protocols:

a. Sample results greater than or equal to the RL shall be reported as measured by the laboratory (i.e., the measured chemical concentration in the sample).

b. Sample results less than the RL, but greater than or equal to the laboratory's MDL, shall be reported as "Detected, but Not Quantified," or DNQ. The estimated chemical concentration of the sample shall also be reported.

   For the purposes of data collection, the laboratory shall write the estimated chemical concentration next to DNQ. The laboratory may, if such information is available, include numerical estimates of the data quality for the reported result. Numerical estimates of data quality may be percent accuracy (± a percentage of the reported value), numerical ranges (low to high), or any other means considered appropriate by the laboratory.

c. Sample results less than the laboratory's MDL shall be reported as "Not Detected," or ND.

d. Dischargers are to instruct laboratories to establish calibration standards so that the Minimum Level (ML) value (or its equivalent if there is differential treatment of samples relative to calibration standards) is the lowest calibration standard. At no time is the Discharger to use analytical data derived from extrapolation beyond the lowest point of the calibration curve.

5. **Multiple Sample Data**. When determining compliance with an AMEL, AWEL, or MDEL for priority pollutants and more than one sample result is available, the Discharger shall compute the arithmetic mean unless the data set contains one or more reported determinations of "Detected, but Not Quantified" (DNQ) or "Not Detected" (ND). In those cases, the Discharger shall compute the median in place of the arithmetic mean in accordance with the following procedure:

   a. The data set shall be ranked from low to high, ranking the reported ND determinations lowest, DNQ determinations next, followed by quantified values (if any). The order of the individual ND or DNQ determinations is unimportant.

   b. The median value of the data set shall be determined. If the data set has an odd number of data points, then the median is the middle value. If the data set has an even number of data points, then the median is the average of the two values around the middle unless one or both of the points are ND or DNQ, in which case the median value shall be the lower of the two data points where DNQ is lower than a value and ND is lower than DNQ.

6. The Discharger shall submit SMR's in accordance with the following requirements:

   a. The Discharger shall arrange all reported data in a tabular format. The data shall be summarized to clearly illustrate whether the facility is operating in compliance with interim and/or final effluent limitations. The Discharger is not required to duplicate the submittal of data that is entered in a tabular format within CIWQS. When electronic submittal of data is required and CIWQS does not provide for entry into a tabular format within the system, the Discharger shall electronically submit the data in a tabular format as an attachment.

   b. The Discharger shall attach a cover letter to the SMR. The information contained in the cover letter shall clearly identify violations of the WDR's; discuss corrective actions taken or planned; and the proposed time schedule for corrective actions.

Identified violations must include a description of the requirement that was violated and a description of the violation.

7. The Discharger shall submit in the SMR's calculations and reports in accordance with the following requirements:

   a. **Average Dry Weather Flow**. The Discharger shall calculate and report the average dry weather flow for the effluent. The average dry weather flow shall be calculated as specified in Section VII.C and reported in the December SMR.

   b. **Mass Loading Limitations**. For BOD_5, TSS, and ammonia, the Discharger shall calculate and report the mass loading (lbs/day) in the SMRs. The mass loading shall be calculated as follows:

   Mass Loading (lbs/day) = Flow (MGD) x Concentration (mg/L) x 8.34

   When calculating daily mass loading, the daily average flow and constituent concentration shall be used. For weekly average mass loading, the weekly average flow and constituent concentration shall be used. For monthly average mass loading, the monthly average flow and constituent concentration shall be used.

   b. **Removal Efficiency (BOD_5 and TSS).** The Discharger shall calculate and report the percent removal of BOD_5 and TSS in the SMRs. The percent removal shall be calculated as specified in Section VII.A. of the Limitations and Discharge Requirements.

   c. **Total Coliform Organisms Effluent Limitations**. The Discharger shall calculate and report the 7-day median of total coliform organisms for the effluent. The 7-day median of total coliform organisms shall be calculated as specified in Section VII.D. of the Limitations and Discharge Requirements.

   d. **Total Calendar Annual Mass Loading Mercury Effluent Limitations**. The Discharger shall calculate and report the total calendar annual mercury mass loading for the effluent in the December SMR. The total calendar year annual mass loading shall be calculated as specified in Section VII.B of the Limitations and Discharge Requirements.

   e. **Turbidity Receiving Water Limitations**. The Discharger shall calculate and report the turbidity difference in the receiving water between receiving water monitoring stations RSW-001 and RSW-002 applicable to the natural turbidity condition specified in Section V.A.17.a-e. of the Limitations and Discharge Requirements.

   f. **Temperature Receiving Water Limitations**. The Discharger shall calculate and report the temperature change in the receiving water between Monitoring Locations RSW-001 and RSW-002.

   g. **Chlorpyrifos and Diazinon Effluent Limitation**. The Discharger shall calculate and report the value of S_{AMEL} and S_{MDEL} for the effluent, using the equation in Effluent Limitations IV.A.1.g and consistent with the Compliance Determination Language in Section VII.G.

   h. **Temperature Effluent Limitation**. For every day receiving water temperature samples are collected at RSW-001, the Discharger shall calculate and report the temperature difference between the effluent and upstream receiving water based on the difference in the temperature at EFF-001 and RSW-001.

C. Discharge Monitoring Reports (DMR's) – Not Applicable

D. Other Reports

1. **Special Study Reports and Progress Reports.** As specified in the compliance time schedules required in the Special Provisions contained in section VI of the Order, special study and progress reports shall be submitted in accordance with the following reporting requirements. At minimum, the progress reports shall include a discussion of the status of final compliance, whether the Discharger is on schedule to meet the final compliance date, and the remaining tasks to meet the final compliance date.

Table E-10. Reporting Requirements for Special Provisions Reports

Special Provision	Reporting Requirements
Salinity Evaluation and Minimization Plan (Special Provision VI.C.3.c)	1 December 2014
Pollution Prevention Plan for Mercury and Compliance Schedule for Methylmercury, Progress Reports (Special Provisions VI.B.3.a. and VI.C.7.a.)	30 January, annually
Phase 1 Methylmercury Control Study Progress Report (Special Provision VI.C.7.a)	20 October 2015

2. The Discharger shall report the results of any special studies, acute and chronic toxicity testing, TRE/TIE, and Pollution Prevention Plan required by Special Provisions – VI.C.2. The Discharger shall report the progress in satisfaction of compliance schedule dates specified in Special Provisions – VI.C.7. The Discharger shall submit reports with the first monthly SMR scheduled to be submitted on or immediately following the report due date.

3. **Within 60 days of permit adoption**, the Discharger shall submit a report outlining reporting levels (RLs), method detection limits, and analytical methods for approval. The Discharger shall comply with the monitoring and reporting requirements for CTR constituents as outlined in section 2.3 and 2.4 of the SIP. The maximum required reporting levels for priority pollutant constituents shall be based on the Minimum Levels (MLs) contained in Appendix 4 of the SIP, determined in accordance with Section 2.4.2 and Section 2.4.3 of the SIP. In accordance with Section 2.4.2 of the SIP, when there is more than one ML value for a given substance, the Central Valley Water Board shall include as RLs, in the permit, all ML values, and their associated analytical methods, listed in Appendix 4 that are below the calculated effluent limitation. The Discharger may select any one of those cited analytical methods for compliance determination. If no ML value is below the effluent limitation, then the Central Valley Water Board shall select as the RL, the lowest ML value, and its associated analytical method, listed in Appendix 4 for inclusion in the permit. Table E-8 provides required maximum reporting levels in accordance with the SIP.

4. **Annual Operations Report.** By 30 January of each year, the Discharger shall submit a written report to the Executive Officer containing the following:

   a. The names, certificate grades, and general responsibilities of all persons employed at the Facility.

   b. The names and telephone numbers of persons to contact regarding the plant for emergency and routine situations.

c. A statement certifying when the flow meter(s) and other monitoring instruments and devices were last calibrated, including identification of who performed the calibration.

d. A statement certifying whether the current operation and maintenance manual, and contingency plan, reflect the wastewater treatment plant as currently constructed and operated, and the dates when these documents were last revised and last reviewed for adequacy.

e. The Discharger may also be requested to submit an annual report to the Central Valley Water Board with both tabular and graphical summaries of the monitoring data obtained during the previous year. Any such request shall be made in writing. The report shall discuss the compliance record. If violations have occurred, the report shall also discuss the corrective actions taken and planned to bring the discharge into full compliance with the waste discharge requirements.

ATTACHMENT F – FACT SHEET

Contents

I. Permit Information F-3
II. Facility Description F-4
A. Description of Wastewater and Biosolids Treatment and Controls F-4
B. Discharge Points and Receiving Waters F-4
C. Summary of Existing Requirements and Self-Monitoring Report (SMR) Data F-5
D. Compliance Summary F-7
E. Planned Changes – Not Applicable F-8
III. Applicable Plans, Policies, and Regulations F-9
A. Legal Authorities F-9
B. California Environmental Quality Act (CEQA) F-9
C. State and Federal Laws, Regulations, Policies, and Plans F-9
D. Impaired Water Bodies on CWA 303(d) List F-12
E. Other Plans, Polices and Regulations F-13
IV. Rationale For Effluent Limitations and Discharge Specifications F-14
A. Discharge Prohibitions F-15
B. Technology-Based Effluent Limitations F-15
1. Scope and Authority F-15
2. Applicable Technology-Based Effluent Limitations F-16
C. Water Quality-Based Effluent Limitations (WQBELs) F-17
1. Scope and Authority F-17
2. Applicable Beneficial Uses and Water Quality Criteria and Objectives F-17
3. Determining the Need for WQBELs F-26
4. WQBEL Calculations F-56
5. Whole Effluent Toxicity (WET) F-58
D. Final Effluent Limitation Considerations F-61
1. Mass-based Effluent Limitations F-61
2. Averaging Periods for Effluent Limitations F-61
3. Satisfaction of Anti-Backsliding Requirements F-62
4. Antidegradation Policies F-65
5. Stringency of Requirements for Individual Pollutants F-65
E. Interim Effluent Limitations F-67
F. Land Discharge Specifications – Not Applicable F-68
G. Recycling Specifications – Not Applicable F-68
V. Rationale for Receiving Water Limitations F-68
A. Surface Water F-68
B. Groundwater F-71
VI. Rationale for Provisions F-71
A. Standard Provisions F-71
B. Special Provisions F-72
1. Reopener Provisions F-72
2. Special Studies and Additional Monitoring Requirements F-73
3. Best Management Practices and Pollution Prevention F-77
4. Construction, Operation, and Maintenance Specifications F-79
5. Special Provisions for Municipal Facilities (POTWs Only) F-80
6. Other Special Provisions F-81
7. Compliance Schedules F-81
VII. Rationale for Monitoring and Reporting Requirements F-83

A. Influent Monitoring F-83
B. Effluent Monitoring F-83
C. Whole Effluent Toxicity Testing Requirements F-84
D. Receiving Water Monitoring F-85
E. Other Monitoring Requirements F-87
VIII. Public Participation F-88
A. Notification of Interested Parties F-88
B. Written Comments F-88
C. Public Hearing F-88
D. Reconsideration of Waste Discharge Requirements F-89
E. Information and Copying F-89
F. Register of Interested Persons F-89
G. Additional Information F-89

Tables

Table F-1. Facility Information F-3
Table F-2. Historic Effluent Limitations and Monitoring Data – Discharge Point 001 ..... F-5
Table F-3. Historic Effluent Limitations and Monitoring Data – Discharge Point 003 ..... F-6
Table F-4. Historic Effluent Limitations and Monitoring Data – Discharge Point 004 ..... F-7
Table F-5. Basin Plan Beneficial Uses F-9
Table F-6. 303 (d) List for the Southern Delta F-13
Table F-7. Summary of Technology-based Effluent Limitations F-16
Table F-8. Zinc ECA Evaluation F-23
Table F-9. Copper ECA Evaluation F-24
Table F-10. Cadmium ECA Evaluation F-26
Table F-11. Summary of ECA Evaluations for CTR Hardness-dependent Metals F-26
Table F-12. Lead RPA F-35
Table F-13. Summary of Effluent and Receiving Water Data for Lead F-36
Table F-14. Summary of Effluent and Receiving Water Data for Selenium F-37
Table F-15. Summary of Effluent and Receiving Water Data for Thallium F-39
Table F-16. Copper RPA F-45
Table F-17. Salinity Water Quality Criteria/Objectives F-53
Table F-18. Summary of Water Quality-Based Effluent Limitations F-57
Table F-19. Whole Effluent Chronic Toxicity Testing Results F-59
Table F-20. Summary of Monitoring Data for Constituents of Concern at Discharge Point 003 ..... F-64
Table F-21. Summary of Final Effluent Limitations F-66
Table F-22. Interim Mercury Effluent Limitation Calculation Summary F-68

ATTACHMENT F – FACT SHEET

As described in section I, the Central Valley Water Board incorporates this Fact Sheet as findings of the Central Valley Water Board supporting the issuance of this Order. This Fact Sheet includes the legal requirements and technical rationale that serve as the basis for the requirements of this Order.

This Order has been prepared under a standardized format to accommodate a broad range of discharge requirements for Dischargers in California. Only those sections or subsections of this Order that are specifically identified as “not applicable” have been determined not to apply to this Discharger. Sections or subsections of this Order not specifically identified as “not applicable” are fully applicable to this Discharger.

I. PERMIT INFORMATION

The following table summarizes administrative information related to the facility.

Table F-1. Facility Information

WDID	5B390100001
Discharger	California Department of Corrections and Rehabilitation
Name of Facility	Deuel Vocational Institution
Facility Address	23500 Kasson Road
	Tracy, CA 95376
	San Joaquin County
Facility Contact, Title and Phone	Terry Bettencourt, Correctional Plant Manager, (209) 830-3932
Authorized Person to Sign and Submit Reports	Terry Bettencourt, Correctional Plant Manager, (209) 830-3932
Mailing Address	Same as Facility Address
Billing Address	Same as Facility Address
Type of Facility	Publicly Owned Treatment Works (POTW)
Major or Minor Facility	Minor
Threat to Water Quality	1
Complexity	A
Pretreatment Program	Not Applicable
Recycling Requirements	Not Applicable
Facility Permitted Flow	0.62 million gallons per day (MGD), average dry weather flow
Facility Design Flow	0.70 MGD, average dry weather flow
Watershed	Sacramento – San Joaquin Delta
Receiving Water	Deuel Drain
Receiving Water Type	Estuary

A. The California Department of Corrections and Rehabilitation (hereinafter Discharger) is the owner and operator of a wastewater collection, treatment, and disposal system, and provides sewerage service to the Deuel Vocational Institution (hereinafter Facility), a California prison facility.

For the purposes of this Order, references to the “discharger” or “permittee” in applicable federal and state laws, regulations, plans, or policy are held to be equivalent to references to the Discharger herein.

B. The Facility discharges wastewater to Deuel Drain, a water of the United States, tributary to the San Joaquin River via Paradise Cut within the Sacramento – San Joaquin Delta. The Discharger was previously regulated by Order R5-2008-0164 and National Pollutant Discharge Elimination System (NPDES) Permit No. CA0078093 which was adopted on 24 October 2008 and expired on 1 October 2013. Attachment B provides a map of the area around the Facility. Attachment C provides a flow schematic of the Facility.

Prior to making any change in the point of discharge, place of use, or purpose of use of treated wastewater that results in a decrease of flow in any portion of a watercourse, the Discharger must file a petition with the State Water Board, Division of Water Rights, and receive approval for such a change. The State Water Board retains the jurisdictional authority to enforce such requirements under Water Code section 1211.

C. The Discharger filed a report of waste discharge (ROWD) and submitted an application for reissuance of its WDR's and NPDES permit on 9 July 2013. The application was deemed complete on 19 August 2013. A site visit was conducted on 4 June 2013, to observe operations and collect additional data to develop permit limitations and requirements for waste discharge.

II. FACILITY DESCRIPTION

The Facility is a correctional facility located east of Tracy, CA. The Discharger provides sewerage service for the Deuel Vocational Institution and serves a population of approximately 3,132, which includes inmates and staff, which is serviced by a sanitary wastewater treatment plant. The design average dry weather flow capacity of the Facility is 0.70 MGD.

A. Description of Wastewater and Biosolids Treatment and Controls

The Discharger constructed upgrades to their tertiary treatment plant and began discharging from the upgraded plant on 22 September 2010. The upgraded treatment system at the Facility consists of mechanical bar screening, grit removal, two drum screens, biological treatment using anoxic and aeration basins including nitrification and denitrification, four membrane bioreactor (MBR) filtration tanks, ultraviolet light (UV) disinfection, and three cooling towers. Solids at the Facility are digested in an aerobic digester and dewatered in one of two belt presses, then hauled offsite approximately every 3 weeks. Effluent is discharged from the Facility to Deuel Drain at Discharge Point 001.

Industrial storm water commingled with groundwater may be discharged to Deuel Drain at Discharge Points 003 and 004 (also referred to as Storm 1 and Storm 2). Order R5-2008-0164 regulated storm water discharges from Discharge Points 003 and 004. The State Water Board adopted the *General Permit for Waste Discharge Requirements (WDR's) for Storm Water Discharges from Small Municipal Separate Storm Sewer Systems (MS4s)* (Order 2013-0001-DWQ) on 5 February 2013. The Discharger submitted an NOI and was enrolled for coverage under General Order 2013-0001-DWQ as of 19 July 2013. General Order 2013-0001-DWQ contains provisions requiring the Discharger to prohibit non-storm water discharges through the MS4; detect and eliminate illicit discharges; and implement a pollution prevention/good housekeeping program. Compliance with the requirements of General Order 2013-0001-DWQ is expected to effectively prevent or reduce the amount of pollutant runoff at Discharge Points 003 and 004. Therefore, Discharge Points 003 and 004 are no longer regulated by this NPDES permit, and are regulated under Order 2013-0001-DWQ.

B. Discharge Points and Receiving Waters

1. The Facility is located in Section 20, T2S, R6E, MDB&M, as shown in Attachment B, a part of this Order.

2. Treated municipal wastewater is discharged at Discharge Point 001 to Deuel Drain, a water of the United States and a tributary to the San Joaquin River at a point latitude 37° 45' 02" N and longitude 121° 19' 35" W.

C. Summary of Existing Requirements and Self-Monitoring Report (SMR) Data

1. Effluent limitations contained in Order R5-2008-0164 for discharges from Discharge Point 001 (Monitoring Location EFF-001) and representative monitoring data from the term of Order R5-2008-0164 are as follows:

Table F-2. Historic Effluent Limitations and Monitoring Data – Discharge Point 001

Parameter	Units	Effluent Limitation			Monitoring Data (22 December 2010 – 30 April 2013)		
		Average Monthly	Average Weekly	Maximum Daily	Highest Average Monthly Discharge	Highest Average Weekly Discharge	Highest Daily Discharge
Average Dry Weather Flow	MGD	0.62	--	--	--	--	0.64
Conventional Pollutants							
Biochemical Oxygen Demand (5-day @ 20ºC)	mg/L	10[1]	15[1]	20[1]	0.96	1.95	3.4
		20[2]	30[2]	40[2]			
	lbs/day[3]	52[1]	78[1]	103[1]	3	5.7	10.8
		103[2]	155[2]	207[2]			
	% removal	85	--	--	99[4]	--	--
pH	standard units	--	--	6.5 – 8.5	--	--	6.6 – 8.3
Total Suspended Solids	mg/L	10[1]	15[1]	20[1]	2.4	6.1	12
		20[2]	30[2]	40[2]			
	lbs/day[3]	52[1]	78[1]	103[1]	9	22	43
		103[2]	155[2]	207[2]			
	% removal	85	--	--	98[4]	--	--
Priority Pollutants							
Bromoform	µg/L	4.3	--	5.8	<0.1	--	<0.1
Chlorodibromomethane	µg/L	0.41	--	0.58	<0.08	--	<0.08
Dichlorobromomethane	µg/L	0.56	--	0.82	0.075	--	J 0.1
Non-Conventional Pollutants							
Ammonia Nitrogen, Total (as N)	mg/L	0.7[1]	--	2.2[1]	0.51	--	1.28
		--	--	4.4[2]			
	lbs/day[3]	3.6[1]		11.4[1]	NR	--	NR
		--	--	22.8[2]			
Chlorine, Total Residual	mg/L	--	0.11[5]	0.019	--	--	<0.01
Electrical Conductivity @ 25ºC	µmhos/cm	700[6]	--	--	3,550	--	--
		1,000[7]	--	--	3,440	--	--
Nitrate Nitrogen, Total (as N)	mg/L	10	--	--	8.3	--	--
Temperature	°F	--	--	20[8]	--	--	18[9]

Parameter	Units	Effluent Limitation			Monitoring Data (22 December 2010 – 30 April 2013)		
		Average Monthly	Average Weekly	Maximum Daily	Highest Average Monthly Discharge	Highest Average Weekly Discharge	Highest Daily Discharge
Total Coliform Organisms	MPN/ 100 mL	--	2.2[10]	23[11]/240[12]	--	--	23
Acute Toxicity	% survival	--	--	70[13]/90[14]	--	--	95[4]

NR = Not Reported
1 Final effluent limitation effective 31 December 2009.
2 Interim effluent limitation effective 13 December 2008 through 31 December 2009.
3 Based on a design flow of 0.62 MGD.
4 Represents the minimum reported result.
5 Applied as a 4-day average effluent limitation.
6 Applies from 1 April through 31 August.
7 Applies from 1 September through 31 March.
8 The maximum effluent temperature shall not exceed the natural receiving water by more than 20°F.
9 Represents the maximum observed temperature difference between the effluent and upstream receiving water at Monitoring Locations EFF-001 and RSW-001.
10 Applied as a 7-day median effluent limitation.
11 Effluent total coliform organisms are not to exceed 23 MPN/100mL more than once in any 30-day period.
12 Applied as an instantaneous maximum effluent limitation.
13 Minimum for any one bioassay.
14 Median for any three consecutive bioassays.

2. Effluent limitations contained in Order R5-2008-0164 for discharges from Discharge Point 003 (Monitoring Location EFF-003) and representative monitoring data from the term of Order R5-2008-0164 are as follows:

Table F-3. Historic Effluent Limitations and Monitoring Data – Discharge Point 003

Parameter	Units	Effluent Limitation			Monitoring Data (December 2008 – April 2013)		
		Average Monthly	Average Weekly	Maximum Daily	Highest Average Monthly Discharge	Highest Average Weekly Discharge	Highest Daily Discharge
Priority Pollutants							
Benzene	µg/L	0.5	--	1.0	J 1.6	--	J 1.6
Bromoform	µg/L	0.5	--	1.0	J 0.4	--	J 0.4
Chlorodibromo-methane	µg/L	0.5	--	1.0	J 0.4	--	J 0.4
Chloroform	µg/L	0.5	--	1.0	J 0.2	--	J 0.2
Ethylbenzene	µg/L	0.5	--	1.0	J 0.27	--	J 0.27
Tetrachloroethylene	µg/L	0.5	--	1.0	0.5	--	0.5
Toluene	µg/L	0.5	--	1.0	J 0.6	--	J 0.6
Trichloroethylene	µg/L	0.5	--	1.0	0.7	--	0.7
Non-Conventional Pollutants							
Cis-1,2-Dichloroethylene	µg/L	0.5	--	1.0	J 0.2	--	J 0.2
Xylene	µg/L	0.5	--	1.0	J 0.3	--	J 0.3

3. Effluent limitations contained in Order R5-2008-0164 for discharges from Discharge Point 004 (Monitoring Location EFF-004) are as follows. The Discharger did not discharge at Discharge Point 004 during the term of Order R5-2008-0164, therefore, effluent monitoring data is not available.

Table F-4. Historic Effluent Limitations and Monitoring Data – Discharge Point 004

Parameter	Units	Effluent Limitation		
		Average Monthly	Average Weekly	Maximum Daily
Priority Pollutants				
Benzene	µg/L	0.5	--	1.0
Bromoform	µg/L	0.5	--	1.0
Chloroform	µg/L	0.5	--	1.0
Dibromochloromethane	µg/L	0.5	--	1.0
Ethylbenzene	µg/L	0.5	--	1.0
Tetrachloroethylene	µg/L	0.5	--	1.0
Toluene	µg/L	0.5	--	1.0
Trichloroethylene	µg/L	0.5	--	1.0
Non-Conventional Pollutants				
Cis-1,2-Dichloroethylene	µg/L	0.5	--	1.0
Xylene	µg/L	0.5	--	1.0

D. Compliance Summary

1. The Central Valley Water Board issued Administrative Civil Liability (ACL) Complaint No. R5-2009-0571 on 12 November 2009 which proposed to assess a civil liability of $6,000 against the Discharger for violations of effluent limitations in Order R5-2008-0164 for electrical conductivity and dichlorobromomethane that occurred from 1 January 2009 through 7 July 2009. The Discharger settled this ACL by payment.
2. The Central Valley Water Board issued ACL Complaint No. R5-2010-0526 on 25 June 2010 which proposed to assess a civil liability of $36,000 against the Discharger for violations of effluent limitations in Order R5-2008-0164 for electrical conductivity, dichlorobromomethane, nitrate, and temperature that occurred from 30 April 2009 through 31 March 2010. The Discharger settled this ACL by payment.
3. The Central Valley Water Board issued ACL Complaint No. R5-2010-0549 on 4 November 2010 which proposed to assess a civil liability of $36,000 against the Discharger for violations of effluent limitations in Order R5-2008-0164 for benzene, electrical conductivity, and nitrate that occurred from 2 March 2010 through 31 August 2010. The Discharger settled this ACL by payment.
4. The Central Valley Water Board issued ACL Complaint No. R5-2011-0575 on 6 May 2011 which proposed to assess a civil liability of $21,000 against the Discharger for violations of effluent limitations in Order R5-2008-0164 for electrical conductivity and nitrate that occurred from 31 July 2010 through 28 February 2011. The Discharger settled this ACL by payment.
5. The Central Valley Water Board conducted a Compliance Evaluation Inspection (CEI) on 14 December 2010. Major findings from the CEI are as follows:
   a. Order R5-2008-0164 section VI.C.3.a required the Discharger to maintain an updated Storm Water Pollution Prevention Plan (SWPPP). The Facility SWPPP

had last been updated on 22 January 2009 and did not include information in the plan or on the drainage map regarding the new Facility which began operating in September 2010.

b. Order R5-2008-0164 Provision V.A.5.b requires the surface water temperature of the receiving water not rise greater than 4°F above the natural temperature of the receiving water at any time or place. In the September 2010 SMR, the Discharger reported that on 28 September 2010 the temperature at Monitoring Location RSW-002 was 73.6°F, which was 4.1 degrees higher than the surface water temperature at Monitoring Location RSW-001.

c. Order R5-2008-0164, Monitoring and Reporting Program Provision I.D requires all monitoring instruments and devices shall be properly maintained and calibrated at least once per year. Records showing that the flow meters were properly calibrated upon installation were not available for review.

d. Order R5-2008-0164, Attachment D, Standard Provisions, Provision III.B requires that monitoring results must be conducted according to test procedures under Part 136. USEPA regulations at 136.3 require samples to be preserved at less than or equal to 6°C. Neither the influent nor the effluent composite samplers were equipped with thermometers. Temperatures for samples were reported out of range on 4 November 2010 for samples collected 25 October 2010 as well as for third quarter acute toxicity analyses for Discharge Point 001 and chronic toxicity analyses for Monitoring Location RSW-001.

e. Order R5-2008-0164, Monitoring and Reporting Program, Provision III.A.1, Table E-2 requires the Discharger to monitor influent flow continuously. In the October 2010 SMR, the Discharger reported that loadings could not be calculated for 5-day biochemical oxygen demand (BOD_5), total suspended solids (TSS), and total dissolved solids (TDS) because the influent flow meter had been unplugged by a worker knocking out the plug resulting in lower flow rate meter readings.

f. Order R5-2008-0164, Monitoring and Reporting Program, Provision IV.A.1, Table E-3 requires the Discharger to monitor once per month for methylmercury at Discharge Point 001. No sample for methylmercury was reported in the October 2010 SMR.

g. Order R5-2008-0164, Monitoring and Reporting Program, Provision VIII.B.1, Table E-8 requires the Discharger to monitor multiple parameters once per quarter for groundwater Monitoring Locations GW-001 through GW-006. Since 2009, the Discharger only conducted groundwater monitoring for the first and second quarters for 2009 and 2010.

h. Order R5-2008-0164, Monitoring and Reporting Program, Provision I.B instructs that a non-certified laboratory will be accepted provided a Quality Assurance-Quality Control Program is instituted by the laboratory. The Discharger had not yet developed a written Quality Assurance-Quality Control Program.

E. Planned Changes – Not Applicable

III. APPLICABLE PLANS, POLICIES, AND REGULATIONS

The requirements contained in this Order are based on the requirements and authorities described in this section.

A. Legal Authorities

This Order serves as WDR's pursuant to article 4, chapter 4, division 7 of the California Water Code (commencing with section 13260). This Order is also issued pursuant to section 402 of the federal Clean Water Act (CWA) and implementing regulations adopted by the U.S. EPA and chapter 5.5, division 7 of the Water Code (commencing with section 13370). It shall serve as an NPDES permit for point source discharges from this facility to surface waters.

B. California Environmental Quality Act (CEQA)

Under Water Code section 13389, this action to adopt an NPDES permit is exempt from the provisions of Chapter 3 of CEQA, (commencing with section 21100) of Division 13 of the Public Resources Code.

C. State and Federal Laws, Regulations, Policies, and Plans

1. **Water Quality Control Plans**. Requirements of this Order specifically implement the applicable Water Quality Control Plans.

   a. **Basin Plan**. The Central Valley Water Board adopted Water Quality Control Plan, Fourth Edition (Revised October 2011), for the Sacramento and San Joaquin River Basins (hereinafter Basin Plan) that designates beneficial uses, establishes water quality objectives, and contains implementation programs and policies to achieve those objectives for all waters addressed through the plan. Requirements in this Order implement the Basin Plan.

   The Basin Plan in Table II-1, Section II, identifies present and potential uses for the Sacramento – San Joaquin Delta, which includes Deuel Drain. In addition, the Basin Plan implements State Water Board Resolution 88-63, which established state policy that all waters, with certain exceptions, should be considered suitable or potentially suitable for municipal or domestic supply. Thus, beneficial uses applicable to Deuel Drain are as follows:

Table F-5. Basin Plan Beneficial Uses

Discharge Point	Receiving Water Name	Beneficial Use(s)
001	Deuel Drain	Existing: Municipal and domestic supply (MUN); agricultural supply, including stock watering (AGR); industrial service supply (IND); industrial process supply (PROC); water contact recreation (REC-1); non-contact water recreation, including aesthetic enjoyment (REC-2); warm freshwater habitat (WARM); cold freshwater habitat (COLD); warm and cold migration of aquatic organisms (MIGR); warm spawning, reproduction, and/or early development (SPWN); wildlife habitat (WILD); and navigation (NAV).

   b. **Bay-Delta Plan**. The *Water Quality Control Plan for the San Francisco Bay/Sacramento-San Joaquin Delta Estuary* (Bay-Delta Plan) was adopted in May 1995 by the State Water Board superseding the 1991 Bay-Delta Plan. The Bay-Delta Plan identifies the beneficial uses of the estuary and includes objectives for flow, salinity, and endangered species protection.

The State Water Board adopted Decision 1641 (D-1641) on 29 December 1999, and revised on 15 March 2000. D-1641 implements flow objectives for the Bay-Delta Estuary, approves a petition to change points of diversion of the Central Valley Project and the State Water Project in the Southern Delta, and approves a petition to change places of use and purposes of use of the Central Valley Project. The water quality objectives of the Bay-Delta Plan are implemented as part of this Order.

The Bay-Delta Plan includes water quality objectives for electrical conductivity for the South Delta in the vicinity of the discharge[1]. On 1 June 2011, the Superior Court for Sacramento County entered a judgment and peremptory writ of mandate in the matter of City of Tracy v. State Water Resources Control Board (Case No; 34-2009-8000-392-CU-WM-GDS), ruling that the South Delta salinity objectives shall not apply to the City of Tracy and other municipal dischargers pending reconsideration of the South Delta salinity objectives and adoption of a proper program of implementation that includes municipal dischargers. The State Water Board is currently considering new salinity and flow objectives in the South Delta that will address the Court Order. Therefore, at the time this Order was adopted the South Delta salinity objectives were not applicable to the Discharger.

c. **Thermal Plan.** The State Water Board adopted the *Water Quality Control Plan for Control of Temperature in the Coastal and Interstate Waters and Enclosed Bays and Estuaries of California* (Thermal Plan) on 7 January 1971, and amended this plan on 18 September 1975. This plan contains temperature objectives for surface waters. The Thermal Plan is applicable to the discharge from the Facility. For the purposes of the Thermal Plan, the discharge is considered to be an *Existing Discharge of Elevated Temperature Waste to an Estuary*, as defined in the Thermal Plan. Therefore, the Discharger must meet the water quality objective at Section 5.A(1) of the Thermal Plan, which requires compliance with the following:

   i. The maximum temperature shall not exceed the natural receiving water temperature by more than 20°F.

   ii. Elevated temperature waste discharges either individually or combined with other discharges shall not create a zone, defined by water temperatures of more than 1°F above natural receiving water temperature, which exceeds 25 percent of the cross-sectional area of a main river channel at any point.

   iii. No discharge shall cause a surface water temperature rise greater than 4°F above the natural temperature of the receiving waters at any time or place.

   iv. Additional limitations shall be imposed when necessary to assure protection of beneficial uses.

   Requirements of this Order implement the Thermal Plan.

d. **Sediment Quality.** The State Water Board adopted the *Water Quality Control Plan for Enclosed Bays and Estuaries – Part 1, Sediment Quality* on 16 September 2008, and it became effective on 25 August 2009. This plan supersedes other narrative sediment quality objectives, and establishes new sediment quality objectives and related implementation provisions for specifically defined sediments in most bays and estuaries. Requirements of this Order implement sediment quality objectives of this Plan.

[1] The Bay-Delta Plan includes water quality objectives at three locations in the South Delta for EC. The water quality objectives are a 14-day running average EC of 700 µmhos/cm from 1 April – 31 August and a 14-day running average EC of 1,000 µmhos/cm from 1 September – 31 March.

2. **National Toxics Rule (NTR) and California Toxics Rule (CTR).** U.S. EPA adopted the NTR on 22 December 1992, and later amended it on 4 May 1995 and 9 November 1999. About forty criteria in the NTR applied in California. On 18 May 2000, U.S. EPA adopted the CTR. The CTR promulgated new toxics criteria for California and, in addition, incorporated the previously adopted NTR criteria that were applicable in the state. The CTR was amended on 13 February 2001. These rules contain federal water quality criteria for priority pollutants.

3. **State Implementation Policy.** On 2 March 2000, the State Water Board adopted the Policy for Implementation of Toxics Standards for Inland Surface Waters, Enclosed Bays, and Estuaries of California (State Implementation Policy or SIP). The SIP became effective on 28 April 2000, with respect to the priority pollutant criteria promulgated for California by the U.S. EPA through the NTR and to the priority pollutant objectives established by the Central Valley Water Board in the Basin Plan. The SIP became effective on 18 May 2000, with respect to the priority pollutant criteria promulgated by the U.S. EPA through the CTR. The State Water Board adopted amendments to the SIP on 24 February 2005, that became effective on 13 July 2005. The SIP establishes implementation provisions for priority pollutant criteria and objectives and provisions for chronic toxicity control. Requirements of this Order implement the SIP.

4. **Antidegradation Policy.** Federal regulation 40 CFR section 131.12 requires that the state water quality standards include an antidegradation policy consistent with the federal policy. The State Water Board established California's antidegradation policy in State Water Board Resolution 68-16. Resolution 68-16 is deemed to incorporate the federal antidegradation policy where the federal policy applies under federal law. Resolution 68-16 requires that existing water quality be maintained unless degradation is justified based on specific findings. The Central Valley Water Board's Basin Plan implements, and incorporates by reference, both the State and federal antidegradation policies. The permitted discharge must be consistent with the antidegradation provision of 40 CFR section 131.12 and State Water Board Resolution 68-16.

5. **Anti-Backsliding Requirements.** Sections 402(o) and 303(d)(4) of the CWA and federal regulations at 40 CFR section 122.44(l) restrict backsliding in NPDES permits. These anti-backsliding provisions require that effluent limitations in a reissued permit must be as stringent as those in the previous permit, with some exceptions in which limitations may be relaxed.

6. **Human Right to Water Act.** In compliance with Water Code section 106.3, it is the policy of the State of California that every human being has the right to safe, clean, affordable, and accessible water adequate for human consumption, cooking, and sanitary purposes. This Order promotes that policy by requiring discharges to meet maximum contaminant levels designed to protect human health and ensure that water is safe for domestic use.

7. **Endangered Species Act Requirements.** This Order does not authorize any act that results in the taking of a threatened or endangered species or any act that is now prohibited, or becomes prohibited in the future, under either the California Endangered Species Act (Fish and Game Code, §§ 2050 to 2097) or the Federal Endangered Species Act (16 U.S.C.A. §§ 1531 to 1544). This Order requires compliance with effluent limits, receiving water limits, and other requirements to protect the beneficial uses of waters of the state The Discharger is responsible for meeting all requirements of the applicable Endangered Species Act.

8. **Emergency Planning and Community Right to Know Act.** Section 13263.6(a) of the Water Code, requires that *"the Regional Water Board shall prescribe effluent limitations*

as part of the waste discharge requirements of a POTW for all substances that the most recent toxic chemical release data reported to the state emergency response commission pursuant to Section 313 of the Emergency Planning and Community Right to Know Act of 1986 (42 U.S.C. Sec. 11023) (EPCRA) indicate as discharged into the POTW, for which the State Water Board or the Regional Water Board has established numeric water quality objectives, and has determined that the discharge is or may be discharged at a level which will cause, have the reasonable potential to cause, or contribute to, an excursion above any numeric water quality objective".

The most recent toxic chemical data report does not indicate any reportable off-site releases or discharges to the collection system for this Facility. Therefore, a reasonable potential analysis based on information from EPCRA cannot be conducted. Based on information from EPCRA, there is no reasonable potential to cause or contribute to an excursion above any numeric water quality objectives included within the Basin Plan or in any State Water Board plan, so no effluent limitations are included in this permit pursuant to Water Code section 13263.6(a).

However, as detailed elsewhere in this Order, available effluent data indicate that there are constituents present in the effluent that have a reasonable potential to cause or contribute to exceedances of water quality standards and require inclusion of effluent limitations based on federal and state laws and regulations.

9. **Storm Water Requirements.** USEPA promulgated federal regulations for storm water on 16 November 1990 in 40 CFR Parts 122, 123, and 124. The NPDES Industrial Storm Water Program regulates storm water discharges from wastewater treatment facilities. Wastewater treatment plants are applicable industries under the storm water program and are obligated to comply with the federal regulations. The State Water Board does not require wastewater treatment facilities with design flows less than 1 MGD to obtain coverage under the Industrial Storm Water General Order. Additionally, as discussed further in section II.A, the Discharger was enrolled for coverage under General Order 2013-0001-DWQ as of 19 July 2013, which regulates storm water discharges from the Discharger's MS4. Therefore, this Order does not regulate storm water discharges from the Facility.

D. Impaired Water Bodies on CWA 303(d) List

1. Under section 303(d) of the 1972 CWA, states, territories and authorized tribes are required to develop lists of water quality limited segments. The waters on these lists do not meet water quality standards, even after point sources of pollution have installed the minimum required levels of pollution control technology. On 11 October 2011 USEPA gave final approval to California's 2008-2010 section 303(d) List of Water Quality Limited Segments (WQLSs). The Basin Plan references this list of WQLSs, which are defined as "…*those sections of lakes, streams, rivers or other fresh water bodies where water quality does not meet (or is not expected to meet) water quality standards even after the application of appropriate limitations for point sources* (40 CFR Part 130, et seq.)." The Basin Plan also states, "*Additional treatment beyond minimum federal standards will be imposed on dischargers to [WQLSs]. Dischargers will be assigned or allocated a maximum allowable load of critical pollutants so that water quality objectives can be met in the segment*."

   The Southern Delta, which includes Deuel Drain, is listed in the 303(d) list and includes: chlorpyrifos, DDT, diazinon, electrical conductivity, group A pesticides, invasive species, mercury, and unknown toxicity.

2. **Total Maximum Daily Loads (TMDLs).** USEPA requires the Central Valley Water Board to develop TMDLs for each 303(d) listed pollutant and water body combination. Table F-6, below, identifies the 303(d) listings and the status of each TMDL.

Table F-6. 303 (d) List for the Southern Delta

Pollutant	Potential Sources	Proposed TMDL Completion
Chlorpyrifos	Agriculture; urban runoff/storm sewers	Adopted 2007
DDT	Agriculture	2021
Diazinon	Agriculture; urban runoff/storm sewers	Adopted 2007
Electrical Conductivity	Agriculture	2019
Group A Pesticides	Agriculture	Adopted 2011
Invasive Species	Source Unknown	2019
Mercury	Resource Extraction	Adopted 2009
Unknown Toxicity	Source Unknown	2019

3. The 303(d) listings and TMDLs have been considered in the development of the Order. A pollutant-by-pollutant evaluation of each pollutant of concern is described in **section** IV.C.3 of this Fact Sheet.

E. Other Plans, Polices and Regulations

1. **Drinking Water Policy.** On 26 July 2013, the Central Valley Water Board adopted Resolution No. R5 2013 0098 amending the Basin Plan and establishing a Drinking Water Policy for surface waters of the Sacramento-San Joaquin Delta (Delta) and upstream tributaries below the first major dams. The project area is bounded by Shasta Dam on the Sacramento River, Millerton Dam on the San Joaquin River, and Folsom Dam on the American River. The Drinking Water Policy was adopted to protect the municipal and domestic supply (MUN) beneficial use and pertains to the following drinking water constituents of concern: organic carbon, Cryptosporidium, Giardia, salt and nutrients. The Policy includes a narrative water quality objective and implementation provisions for Cryptosporidium and Giardia to specifically protect the public water system component of the MUN beneficial use. Approval of the Policy by the State Water Board, USEPA, and the Office of Administrative Law is expected by 2014.

2. **Title 27.** The discharge authorized herein and the treatment and storage facilities associated with the discharge of treated municipal wastewater, except for discharges of residual sludge and solid waste, are exempt from the requirements of Title 27, California Code of Regulations (CCR), section 20005 et seq (hereafter Title 27). The exemption, pursuant to Title 27 CCR section 20090(a), is based on the following:

   a. The waste consists primarily of domestic sewage and treated effluent;

   b. The waste discharge requirements are consistent with water quality objectives; and

c. The treatment and storage facilities described herein are associated with a municipal wastewater treatment plant.

IV. RATIONALE FOR EFFLUENT LIMITATIONS AND DISCHARGE SPECIFICATIONS

Effluent limitations and toxic and pretreatment effluent standards established pursuant to sections 301 (Effluent Limitations), 302 (Water Quality Related Effluent Limitations), 304 (Information and Guidelines), and 307 (Toxic and Pretreatment Effluent Standards) of the CWA and amendments thereto are applicable to the discharge.

The CWA mandates the implementation of effluent limitations that are as stringent as necessary to meet water quality standards established pursuant to state or federal law [33 U.S.C., §1311(b)(1)(C); 40 CFR 122.44(d)(1)]. NPDES permits must incorporate discharge limits necessary to ensure that water quality standards are met. This requirement applies to narrative criteria as well as to criteria specifying maximum amounts of particular pollutants. Pursuant to federal regulations, 40 CFR 122.44(d)(1)(i), NPDES permits must contain limits that control all pollutants that "*are or may be discharged at a level which will cause, have the reasonable potential to cause, or contribute to an excursion above any state water quality standard, including state narrative criteria for water quality*." Federal regulations, 40 CFR 122.44(d)(1)(vi), further provide that "[w]*here a state has not established a water quality criterion for a specific chemical pollutant that is present in an effluent at a concentration that causes, has the reasonable potential to cause, or contributes to an excursion above a narrative criterion within an applicable State water quality standard, the permitting authority must establish effluent limits*."

The CWA requires point source dischargers to control the amount of conventional, non-conventional, and toxic pollutants that are discharged into the waters of the United States. The control of pollutants discharged is established through effluent limitations and other requirements in NPDES permits. There are two principal bases for effluent limitations in the Code of Federal Regulations: 40 CFR 122.44(a) requires that permits include applicable technology-based limitations and standards; and 40 CFR 122.44(d) requires that permits include WQBELs to attain and maintain applicable numeric and narrative water quality criteria to protect the beneficial uses of the receiving water where numeric water quality objectives have not been established. The Basin Plan at page IV-17.00, contains an implementation policy, "Policy for Application of Water Quality Objectives" that specifies that the Central Valley Water Board "*will, on a case-by-case basis, adopt numerical limitations in orders which will implement the narrative objectives*." This Policy complies with 40 CFR 122.44(d)(1). With respect to narrative objectives, the Central Valley Water Board must establish effluent limitations using one or more of three specified sources, including: (1) USEPA's published water quality criteria, (2) a proposed state criterion (i.e., water quality objective) or an explicit state policy interpreting its narrative water quality criteria (i.e., the Central Valley Water Board's "Policy for Application of Water Quality Objectives")(40 CFR 122.44(d)(1)(vi)(A), (B) or (C)), or (3) an indicator parameter.

The Basin Plan includes numeric site-specific water quality objectives and narrative objectives for toxicity, chemical constituents, discoloration, radionuclides, and tastes and odors. The narrative toxicity objective states: "*All waters shall be maintained free of toxic substances in concentrations that produce detrimental physiological responses in human, plant, animal, or aquatic life*." (Basin Plan at III-8.00) The Basin Plan states that material and relevant information, including numeric criteria, and recommendations from other agencies and scientific literature will be utilized in evaluating compliance with the narrative toxicity objective. The narrative chemical constituents objective states that waters shall not contain chemical constituents in concentrations that adversely affect beneficial uses. At minimum, "…*water designated for use as domestic or municipal supply (MUN) shall not contain concentrations of chemical constituents in excess of the maximum contaminant levels (MCLs)*" in Title 22 of CCR. The Basin Plan further states that, to protect all beneficial uses, the Central Valley Water Board may apply limits more stringent than

MCLs. The narrative tastes and odors objective states: "*Water shall not contain taste- or odor-producing substances in concentrations that impart undesirable tastes or odors to domestic or municipal water supplies or to fish flesh or other edible products of aquatic origin, or that cause nuisance, or otherwise adversely affect beneficial uses*."

A. Discharge Prohibitions

1. **Prohibition III.A (No discharge or application of waste other than that described in this Order).** This prohibition is based on Water Code section 13260 that requires filing of a ROWD before discharges can occur. The Discharger submitted a ROWD for the discharges described in this Order; therefore, discharges not described in this Order are prohibited.

2. **Prohibition III.B (No bypasses or overflow of untreated wastewater, except under the conditions at CFR Part 122.41(m)(4)).** As stated in section I.G of Attachment D, Standard Provisions, this Order prohibits bypass from any portion of the treatment facility. Federal regulations, 40 CFR 122.41(m), define "bypass" as the intentional diversion of waste streams from any portion of a treatment facility. This section of the federal regulations, 40 CFR 122.41(m)(4), prohibits bypass unless it is unavoidable to prevent loss of life, personal injury, or severe property damage. In considering the Regional Water Board's prohibition of bypasses, the State Water Board adopted a precedential decision, Order No. WQO 2002-0015, which cites the federal regulations, 40 CFR 122.41(m), as allowing bypass only for essential maintenance to assure efficient operation.

3. **Prohibition III.C (No controllable condition shall create a nuisance).** This prohibition is based on Water Code section 13050 that requires water quality objectives established for the prevention of nuisance within a specific area. The Basin Plan prohibits conditions that create a nuisance.

4. **Prohibition III.D (No inclusion of pollutant free wastewater shall cause improper operation of the Facility's systems).** This prohibition is based on CFR Part 122.41 et seq. that requires the proper design and operation of treatment facilities.

B. Technology-Based Effluent Limitations

1. Scope and Authority

Section 301(b) of the CWA and implementing U.S. EPA permit regulations at 40 CFR section 122.44 require that permits include conditions meeting applicable technology-based requirements at a minimum, and any more stringent effluent limitations necessary to meet applicable water quality standards. The discharge authorized by this Order must meet minimum federal technology-based requirements based on Secondary Treatment Standards at 40 CFR part 133.

Regulations promulgated in 40 CFR section 125.3(a)(1) require technology-based effluent limitations for municipal Dischargers to be placed in NPDES permits based on Secondary Treatment Standards or Equivalent to Secondary Treatment Standards.

The Federal Water Pollution Control Act Amendments of 1972 (PL 92-500) established the minimum performance requirements for POTWs [defined in section 304(d)(1)]. Section 301(b)(1)(B) of that Act requires that such treatment works must, as a minimum, meet effluent limitations based on secondary treatment as defined by the U.S. EPA Administrator.

Based on this statutory requirement, U.S. EPA developed secondary treatment regulations, which are specified in 40 CFR part 133. These technology-based regulations

apply to all municipal wastewater treatment plants and identify the minimum level of effluent quality attainable by secondary treatment in terms of BOD_5, TSS, and pH.

2. Applicable Technology-Based Effluent Limitations

a. **BOD_5 and TSS.** Federal regulations, 40 CFR Part 133, establish the minimum weekly and monthly average level of effluent quality attainable by secondary treatment for BOD_5 and TSS. This Order establishes WQBELs that are equal to or more stringent than the secondary technology-based treatment described in 40 CFR Part 133 and are necessary to protect the beneficial uses of the receiving stream. (See section IV.C.3.c.vii of this Fact Sheet for the discussion on WQBELs for pathogens). In addition, 40 CFR 133.102, in describing the minimum level of effluent quality attainable by secondary treatment, states that the 30-day average percent removal shall not be less than 85 percent. This Order contains a limitation requiring an average of 85 percent removal of BOD_5 and TSS over each calendar month.

b. **Flow.** The Facility was designed to provide a tertiary level of treatment for up to a design flow of 0.70 MGD. When the new wastewater treatment plant was completed, the design average dry weather flow capacity of the plant increased from 0.62 MGD up to 0.70 MGD. However, after the Discharger has concluded that they can maintain their current flow capacity of 0.62 MGD and have not requested an increase in the permitted discharge flow. Therefore, this Order contains an average dry weather discharge flow effluent limitation of 0.62 MGD.

c. **pH.** The secondary treatment regulations at 40 CFR Part 133 also require that pH be maintained between 6.0 and 9.0 standard units.

Summary of Technology-based Effluent Limitations
Discharge Point 001

Table F-7. Summary of Technology-based Effluent Limitations

Parameter	Units	Effluent Limitations				
		Average Monthly	Average Weekly	Maximum Daily	Instantaneous Minimum	Instantaneous Maximum
Average Dry Weather Flow	MGD	0.62[1]	--	--	--	--
Conventional Pollutants						
Biochemical Oxygen Demand (5-day @ 20ºC)[3]	mg/L	30	45	--	--	--
	lbs/day[2]	155	232	--	--	--
	% Removal	85	--	--	--	--
pH[2]	standard units	--	--	--	6.5	8.5
Total Suspended Solids[3]	mg/L	30	45	--	--	--
	lbs/day[2]	155	232	--	--	--
	% Removal	85	--	--	--	--

[1] The average dry weather flow shall not exceed 0.62 MGD.
[2] Based on a design average dry weather flow capacity of 0.62 MGD.
[2] More stringent WQBELs are applicable to the discharge and are included in this Order, as described further in section IV.C.3 of this Fact Sheet.

C. Water Quality-Based Effluent Limitations (WQBELs)

1. Scope and Authority

CWA Section 301(b) and 40 CFR section 122.44(d) require that permits include limitations more stringent than applicable federal technology-based requirements where necessary to achieve applicable water quality standards. This Order contains requirements, expressed as a technology equivalence requirement, more stringent than secondary treatment requirements that are necessary to meet applicable water quality standards. The rationale for these requirements, which consists of tertiary treatment is discussed in section IV.C.3 of the Fact Sheet.

Section 122.44(d)(1)(i) of 40 CFR requires that permits include effluent limitations for all pollutants that are or may be discharged at levels that have the reasonable potential to cause or contribute to an exceedance of a water quality standard, including numeric and narrative objectives within a standard. Where reasonable potential has been established for a pollutant, but there is no numeric criterion or objective for the pollutant, WQBELs must be established using: (1) U.S. EPA criteria guidance under CWA section 304(a), supplemented where necessary by other relevant information; (2) an indicator parameter for the pollutant of concern; or (3) a calculated numeric water quality criterion, such as a proposed state criterion or policy interpreting the state's narrative criterion, supplemented with other relevant information, as provided in section 122.44(d)(1)(vi).

The process for determining reasonable potential and calculating WQBELs when necessary is intended to protect the designated uses of the receiving water as specified in the Basin Plan, and achieve applicable water quality objectives and criteria that are contained in other state plans and policies, or any applicable water quality criteria contained in the CTR and NTR.

2. Applicable Beneficial Uses and Water Quality Criteria and Objectives

The Basin Plan designates beneficial uses, establishes water quality objectives, and contains implementation programs and policies to achieve those objectives for all waters addressed through the plan. In addition, the Basin Plan implements State Water Board Resolution No. 88-63, which established state policy that all waters, with certain exceptions, should be considered suitable or potentially suitable for municipal or domestic supply.

The Basin Plan on page II-1.00 states: "*Protection and enhancement of existing and potential beneficial uses are primary goals of water quality planning…*" and with respect to disposal of wastewaters states that "...*disposal of wastewaters is [not] a prohibited use of waters of the State; it is merely a use which cannot be satisfied to the detriment of beneficial uses.*"

The federal CWA section 101(a)(2), states: "*it is the national goal that wherever attainable, an interim goal of water quality which provides for the protection and propagation of fish, shellfish, and wildlife, and for recreation in and on the water be achieved by July 1, 1983*." Federal Regulations, developed to implement the requirements of the CWA, create a rebuttable presumption that all waters be designated as fishable and swimmable. Federal Regulations, 40 CFR sections 131.2 and 131.10, require that all waters of the State regulated to protect the beneficial uses of public water supply, protection and propagation of fish, shell fish and wildlife, recreation in and on the water, agricultural, industrial and other purposes including navigation. Section 131.3(e), 40 CFR, defines existing beneficial uses as those uses actually attained after 28 November 1975, whether or not they are included in the water quality standards. Federal Regulation, 40 CFR section 131.10 requires that uses be obtained by

implementing effluent limitations, requires that all downstream uses be protected and states that in no case shall a state adopt waste transport or waste assimilation as a beneficial use for any waters of the United States.

a. **Receiving Water and Beneficial Uses.** Refer to III.C.1, above, for a complete description of the receiving water and beneficial uses.

b. **Effluent and Ambient Background Data.** The Discharger began discharging tertiary treated wastewater from the new wastewater treatment plant on 22 September 2010 and was granted a 90-day grace period from mandatory minimum penalties pursuant to California Water Code 13385(j)(1)(D)(i), which ended on 22 December 2010. Thus, effluent monitoring data collected prior to 22 December 2010 is not representative of effluent quality from the new Facility and the RPA was based on effluent data collected during periods of discharge to Deuel Drain between 22 December 2010 through 30 April 2013. The RPA is based on receiving water data collected between 13 December 2008 and 30 April 2013.

c. **Assimilative Capacity/Mixing Zone.** Consistent with Order R5-2008-0164, this Order does not designate dilution credits or a mixing zone and discharge limitations must be met at the point of discharge.

Conversion Factors. The CTR contains aquatic life criteria for arsenic, cadmium, chromium III, chromium VI, copper, lead, nickel, silver, and zinc which are presented in dissolved concentrations. USEPA recommends conversion factors to translate dissolved concentrations to total concentrations. The default USEPA conversion factors contained in Appendix 3 of the SIP were used to convert the applicable dissolved criteria to total recoverable criteria.

d. **Hardness-Dependent CTR Metals Criteria.** The California Toxics Rule and the National Toxics Rule contain water quality criteria for seven metals that vary as a function of hardness. The lower the hardness the lower the water quality criteria. The metals with hardness-dependent criteria include cadmium, copper, chromium III, lead, nickel, silver, and zinc.

This Order has established the criteria for hardness-dependent metals based on the reasonable worst-case ambient hardness as required by the SIP[1], the CTR[2] and State Water Board Order No. WQO 2008-0008 (City of Davis). The SIP and the CTR require the use of “receiving water” or “actual ambient” hardness, respectively, to determine effluent limitations for these metals. (SIP, § 1.2; 40 CFR § 131.38(c)(4)) The CTR does not define whether the term “ambient,” as applied in the regulations, necessarily requires the consideration of upstream as opposed to downstream hardness conditions. Therefore, where reliable, representative data are available, the hardness value for calculating criteria can be the downstream receiving water hardness, after mixing with the effluent (Order WQO 2008-0008, p. 11). The Central Valley Water Board thus has considerable discretion in determining ambient hardness (*Id.*, p.10).

[1] The SIP does not address how to determine the hardness for application to the equations for the protection of aquatic life when using hardness-dependent metals criteria. It simply states, in Section 1.2, that the criteria shall be properly adjusted for hardness using the hardness of the receiving water.

[2] The CTR requires that, for waters with a hardness of 400 mg/L (as $CaCO_3$), or less, the actual ambient hardness of the surface water must be used. It further requires that the hardness values used must be consistent with the design discharge conditions for design flows and mixing zones.

As discussed below, scientific literature provides a reliable method for calculating protective hardness-dependent CTR criteria, considering all discharge conditions. This methodology produces hardness-dependent CTR criteria based on the reasonable worst-case downstream ambient hardness that ensure these metals do not cause receiving water toxicity under any downstream receiving water condition. Under this methodology, the Central Valley Water Board considers all hardness conditions that could occur in the ambient downstream receiving water after the effluent has mixed with the water body[1]. This ensures that effluent limitations are fully protective of aquatic life in all areas of the receiving water affected by the discharge under all flow conditions, at the fully mixed location, and throughout the water body including at the point of discharge into the water body.

i. **Conducting the Reasonable Potential Analysis (RPA).** The SIP in Section 1.3 states, "*The RWQCB shall…determine whether a discharge may: (1) cause, (2) have a reasonable potential to cause, or (3) contribute to an excursion above any applicable priority pollutant criterion or objective*." Section 1.3 provides a step-by-step procedure for conducting the RPA. The procedure requires the comparison of the maximum effluent concentration (MEC) and maximum ambient background concentration to the applicable criterion that has been properly adjusted for hardness. Unless otherwise noted, for the hardness-dependent CTR metals criteria the following procedures were followed for properly adjusting the criterion for hardness when conducting the RPA.

(a) The SIP requires WQBELs if the MEC is equal to or exceeds the applicable criterion, adjusted for hardness. For comparing the MEC to the applicable criterion, the "fully mixed" reasonable worst-case downstream ambient hardness was used to adjust the criterion. In this evaluation the portion of the receiving water affected by the discharge is analyzed. For hardness-dependent criteria, the hardness of the effluent has an impact on the determination of the applicable criterion in areas of the receiving water affected by the discharge. Therefore, for comparing the MEC to the applicable criterion, the reasonable worst-case downstream ambient hardness was used to adjust the criterion. For this situation it is necessary to consider the hardness of the effluent in determining the applicable hardness to adjust the criterion. The procedures for determining the applicable criterion after proper adjustment using the reasonable worst-case downstream ambient hardness is outlined in subsection ii, below.

(b) The SIP requires WQBELs if the receiving water is impaired upstream (outside the influence) of the discharge, i.e., if the maximum ambient background concentration of a pollutant exceeds the applicable criterion, adjusted for hardness[2]. For comparing the maximum ambient background concentration to the applicable criterion, the reasonable worst-case upstream ambient hardness was used to adjust the criteria. This is appropriate, because this area is outside the influence of the discharge. Since the discharge does not impact the upstream hardness, the effect of the effluent hardness was not included in this evaluation.

[1] All effluent discharges will change the ambient downstream metals concentration and hardness. It is not possible to change the metals concentration without also changing the hardness.
[2] The pollutant must also be detected in the effluent.

ii. **Calculating Water Quality-Based Effluent Limitations.** The remaining discussion in this section relates to the development of WQBELs when it has been determined that the discharge has reasonable potential to cause or contribute to an exceedance of the CTR hardness-dependent metals criteria in the receiving water.

A 2006 Study[1] developed procedures for calculating the effluent concentration allowance (ECA)[2] for CTR hardness-dependent metals. The 2006 Study demonstrated that it is necessary to evaluate all discharge conditions (e.g. high and low flow conditions) and the hardness and metals concentrations of the effluent and receiving water when determining the appropriate ECA for these hardness-dependent metals. This method is superior to relying on downstream receiving water samples alone because it captures all possible mixed conditions in the receiving water. Both receiving water and effluent hardness vary based on flow and other factors, but the variability of receiving water and effluent hardness is sometimes independent. Using a calculated hardness value ensures that the Central Valley Water Board considers all possible mixed downstream values that may result from these two independent variables. Relying on receiving water sampling alone is less likely to capture all possible mixed downstream conditions.

The equation describing the total recoverable regulatory criterion, as established in the CTR[3], is as follows:

$$\text{CTR Criterion} = \text{WER} \times (e^{m[\ln(H)]+b}) \qquad \text{(Equation 1)}$$

Where:

H = hardness (as $CaCO_3$)[4]
WER = water-effect ratio
m, b = metal- and criterion-specific constants

In accordance with the CTR, the default value for the WER is 1. A WER study must be conducted to use a value other than 1. The constants “m” and “b” are specific to both the metal under consideration, and the type of total recoverable criterion (i.e., acute or chronic). The metal-specific values for these constants are provided in the CTR at paragraph (b)(2), Table 1.

The equation for the ECA is defined in Section 1.4, Step 2, of the SIP and is as follows:

[1] Emerick, R.W.; Borroum, Y.; & Pedri, J.E., 2006. California and National Toxics Rule Implementation and Development of Protective Hardness Based Metal Effluent Limitations. WEFTEC, Chicago, Ill.
[2] The ECA is defined in Appendix 1 of the SIP (page Appendix 1-2). The ECA is used to calculate WQBELs in accordance with Section 1.4 of the SIP.
[3] 40 CFR § 131.38(b)(2).
[4] For this discussion, all hardness values are in mg/L as $CaCO_3$.

$$ECA = C \quad (\text{when } C \leq B)^{1} \qquad \text{(Equation 2)}$$

Where:

C = the priority pollutant criterion/objective, adjusted for hardness (see Equation 1, above)

B = the ambient background concentration

The 2006 Study demonstrated that the relationship between hardness and the calculated criteria is the same for some metals, so the same procedure for calculating the ECA may be used for these metals. The same procedure can be used for chronic cadmium, chromium III, copper, nickel, and zinc. These metals are hereinafter referred to as "Concave Down Metals". "Concave Down" refers to the shape of the curve represented by the relationship between hardness and the CTR criteria in Equation 1. Another similar procedure can be used for determining the ECA for acute cadmium, lead, and acute silver, which are referred to hereafter as "Concave Up Metals".

ECA for Chronic Cadmium, Chromium III, Copper, Nickel, and Zinc – For Concave Down Metals (i.e., chronic cadmium, chromium III, copper, nickel, and zinc) the 2006 Study demonstrates that when the effluent is in compliance with the CTR criteria and the upstream receiving water is in compliance with the CTR criteria, any mixture of the effluent and receiving water will always be in compliance with the CTR criteria[2]. The 2006 Study proves that regardless of whether the effluent hardness is lower or greater than the upstream hardness, the reasonable worst-case flow condition is the effluent dominated condition (i.e., no receiving water flow)[3]. Consequently, for Concave Down Metals, the CTR criteria have been calculated using the downstream ambient hardness under this condition.

The effluent hardness for Discharge Point 001 ranged from 564 mg/L to 590 mg/L, based on five samples from 22 December 2010 to 30 April 2013. The upstream receiving water hardness varied from 116 mg/L to 1,290 mg/L, based on five samples from13 December 2008 to30 April 2013, and the downstream receiving water hardness was 384 mg/L based on one measurement in January 2012. Under the effluent dominated condition, the reasonable worst-case downstream ambient hardness is 564 mg/L. 40 CFR section 131.38(c)(4) states, "*For waters with a hardness of over 400 mg/L as calcium carbonate, a hardness of 400 mg/L as calcium carbonate shall be used*…" The lowest effluent hardness is 564 mg/L, which is above 400 mg/L. Therefore, a hardness of 400 mg/L was used to represent the minimum effluent hardness for the remainder of this discussion.

[1] The 2006 Study assumes the ambient background metals concentration is equal to the CTR criterion (i.e., C ≤ B)
[2] 2006 Study, p. 5700
[3] There are two typographical errors in the 2006 Study in the discussion of Concave Down Metals when the effluent hardness is less than the receiving water hardness. The effluent and receiving water hardness were transposed in the discussion, but the correct hardness values were used in the calculations. The typographical errors were confirmed by the author of the 2006 Study, by email dated 1 April 2011, from Dr. Robert Emerick to Mr. James Marshall, Central Valley Water Board.

As demonstrated in the example shown in Table F-8, below, using this hardness to calculate the ECA for all Concave Down Metals will result in WQBELs that are protective under all flow conditions, from the effluent dominated condition to high flow condition. This example for zinc assumes the following conservative conditions for the upstream receiving water:

- Upstream receiving water always at the lowest observed upstream receiving water hardness (i.e., 116 mg/L)
- Upstream receiving water zinc concentration always at the CTR criteria (i.e., no assimilative capacity).

Using these reasonable worst-case receiving water conditions, a simple mass balance (as shown in Equation 3, below) accounts for all possible mixtures of effluent and receiving water under all flow conditions.

$$C_{MIX} = C_{RW} \times (1\text{-}EF) + C_{Eff} \times (EF) \qquad \text{(Equation 3)}$$

Where:

C_{MIX} = Mixed concentration (e.g. metals or hardness)
C_{RW} = Upstream receiving water concentration
C_{Eff} = Effluent concentration
EF = Effluent Fraction

In this example, for zinc, for any receiving water flow condition (high flow to low flow), the fully-mixed downstream ambient zinc concentration is in compliance with the CTR criteria[1].

[1] This method considers the actual lowest observed upstream hardness and actual lowest observed effluent hardness to determine the reasonable worst-case ambient downstream hardness under all possible receiving water flow conditions. Table F-8 demonstrates that the receiving water is always in compliance with the CTR criteria at the fully-mixed location in the receiving water. It also demonstrates that the receiving water is in compliance with the CTR criteria for all mixtures from the point of discharge to the fully-mixed location. Therefore, a mixing zone is not used for compliance.

Table F-8. Zinc ECA Evaluation

Lowest Observed Effluent Hardness					**400 mg/L (as $CaCO_3$)[1]**
Lowest Observed Upstream Receiving Water Hardness					**116 mg/L (as $CaCO_3$)**
Highest Assumed Upstream Receiving Water Zinc Concentration					**136 µg/L[2]**
Zinc $ECA_{chronic}$[3]					**388 µg/L**
Effluent Fraction[7]		**Fully Mixed Downstream Ambient Concentration**			
		Hardness[4] (mg/L)	**CTR Criteria[5] (µg/L)**	**Zinc[6] (µg/L)**	**Complies with CTR Criteria**
High Flow	1%	119	139	138	**Yes**
	5%	130	150	149	**Yes**
	15%	159	177	174	**Yes**
	25%	187	204	199	**Yes**
	50%	258	268	262	**Yes**
Low Flow	75%	329	329	325	**Yes**
	100%	400	388	388	**Yes**

1 Assumed minimum hardness value per 40 CFR 131.38(c)(4).
2 Highest assumed upstream receiving water zinc concentration calculated using Equation 1 for chronic criterion at a hardness of 116 mg/L.
3 ECA calculated using Equation 1 for chronic criterion at a hardness of 400 mg/L.
4 Fully mixed downstream ambient hardness is the mixture of the receiving water and effluent hardness at the applicable effluent fraction using Equation 3.
5 Fully mixed downstream ambient criteria are the chronic criteria calculated using Equation 1 at the mixed hardness.
6 Fully mixed downstream ambient zinc concentration is the mixture of the receiving water and effluent zinc concentrations at the applicable effluent fraction using Equation 3.
7 The effluent fraction ranges from 1% at the high receiving water flow condition, to 100% at the lowest receiving water flow condition (i.e., effluent dominated).

The receiving water at times contains concentrations of copper that exceed water quality criteria associated with the hardness condition previous to the discharge. The 2006 Study procedures remain applicable under these conditions. The discharge cannot cause or contribute to a violation of water quality criteria/objectives in the receiving water. Although metals concentrations downstream of the discharge exceed CTR criteria, the cause of the exceedance is not due to the discharge, it is due to the elevated metals concentrations upstream of the discharge. Implementing the procedures of the 2006 study does not result in an increase in toxicity downstream of the discharge, and in fact reduces the amount of toxicity already present in the receiving water. This is demonstrated in the example below for copper (see Table F-9).

As shown in Table F-9 for copper, prior to the discharge the copper has been observed to exceed water quality criteria by up to 51%. When the receiving water contains some fraction of effluent, the percent exceedance is reduced. The greater the amount of effluent in the receiving water, the lower the percent exceedance, until a fully compliant state is achieved when the effluent constitutes the entire flow. The effluent limitation associated with copper, therefore, is sufficient to assure that the discharge never causes or contributes to a violation of a water quality criterion, and in fact reduces the amount of toxicity already present in the receiving water.

Table F-9. Copper ECA Evaluation

Lowest Observed Effluent Hardness					**400 mg/L (as $CaCO_3$)[1]**
Lowest Observed Upstream Receiving Water Hardness					**116 mg/L (as $CaCO_3$)**
Highest Observed Upstream Receiving Water Copper Concentration					**16 µg/L**
Copper $ECA_{chronic}$[2]					**30 µg/L**
Effluent Fraction[6]		**Fully Mixed Downstream Ambient Concentration**			
		Hardness[3] (mg/L)	**CTR Criteria[4] (µg/L)**	**Copper[5] (µg/L)**	**Percent Exceeding Criterion**
High Flow	0%	116	11	16	51%
	1%	119	11	16	49%
	5%	130	12	17	43%
	15%	159	14	18	31%
	25%	187	16	20	23%
	50%	258	21	23	11%
	75%	329	26	27	4%
Low Flow	100%	400	30	30	0%

1 Assumed minimum hardness value per 40 CFR 131.38(c)(4).
2 ECA calculated using Equation 1 for chronic criterion at a hardness of 400 mg/L.
3 Fully mixed downstream ambient hardness is the mixture of the receiving water and effluent hardness at the applicable effluent fraction using Equation 3.
4 Fully mixed downstream ambient criteria are the chronic criteria calculated using Equation 1 at the mixed hardness.
5 Fully mixed downstream ambient copper concentration is the mixture of the receiving water and effluent copper concentrations at the applicable effluent fraction using Equation 3.
6 The effluent fraction ranges from 0% at the high receiving water flow condition, to 100% at the lowest receiving water flow condition (i.e., effluent dominated).

ECA for Acute Cadmium, Lead, and Acute Silver – For Concave Up Metals (i.e., acute cadmium, lead, and acute silver), the relationship between hardness and the metals criteria is different than for Concave Down Metals. The 2006 Study demonstrates that for Concave Up Metals, the effluent and upstream receiving water can be in compliance with the CTR criteria, but the resulting mixture may contain metals concentrations that exceed the CTR criteria and could cause toxicity. For these metals, the 2006 Study provides a mathematical approach to calculate the ECA that is protective of aquatic life, in all areas of the receiving water affected by the discharge, under all discharge and receiving water flow conditions (see Equation 4, below).

The ECA, as calculated using Equation 4, is based on the reasonable worst-case upstream receiving water hardness, the lowest observed effluent hardness, and assuming no receiving water assimilative capacity for metals (i.e., ambient background metals concentrations are at their respective CTR criterion). Equation 4 is not used in place of the CTR equation (Equation 1). Rather, Equation 4, which is derived using the CTR equation, is used as a direct approach for calculating the ECA. This replaces an iterative approach for calculating the ECA. The CTR equation has been used to evaluate the receiving water downstream of the discharge at all discharge and flow conditions to ensure the ECA is protective (e.g., see Table F-10).

$$ECA = \left(\frac{m\left(H_e - H_{rw}\right)\left(e^{m\{ln(H_{rw})\}+b}\right)}{H_{rw}}\right) + e^{m\{ln(H_{rw})\}+b} \quad \text{(Equation 4)}$$

Where:

m, b = criterion specific constants (from CTR)

H_e = lowest observed effluent hardness

H_{rw} = reasonable worst-case upstream receiving water hardness

An example similar to the Concave Down Metals is shown for acute cadmium, a Concave Up Metal, in Table F-10, below. As previously mentioned, the lowest effluent hardness is 564 mg/L, while the upstream receiving water hardness ranged from 116 mg/L to 1,290 mg/L, and the downstream receiving water hardness was 384 mg/L. In this case, the reasonable worst-case upstream receiving water hardness to use in Equation 4 to calculate the ECA is 116 mg/L.

Using the procedures discussed above to calculate the ECA for all Concave Up Metals will result in WQBELs that are protective under all potential effluent/receiving water flow conditions (high flow to low flow) and under all known hardness conditions, as demonstrated in Table F-10, for acute cadmium.

Table F-10. Cadmium ECA Evaluation

Lowest Observed Effluent Hardness					**400 mg/L[1]**
Reasonable Worst-case Upstream Receiving Water Hardness					**116 mg/L**
Reasonable Worst-case Upstream Receiving Water Cadmium Concentration					**5.3 µg/L[2]**
Cadmium ECA_{acute}[3]					**20 µg/L**
Effluent Fraction[7]		**Fully Mixed Downstream Ambient Concentration**			
		Hardness[4] (mg/L) (as $CaCO_3$)	**CTR Criteria[5] (µg/L)**	**Cadmium[6] (µg/L)**	**Complies with CTR Criteria**
High Flow	1%	119	5.5	0.89	Yes
	5%	130	6.1	1.7	Yes
	15%	159	7.6	3.6	Yes
	25%	187	9.2	5.5	Yes
	50%	258	13	10	Yes
	75%	329	17	15	Yes
Low Flow	100%	400	22	20	Yes

1 Assumed minimum hardness value per 40 CFR section 131.38(c)(4).
2 Reasonable worst-case upstream receiving water cadmium concentration calculated using Equation 1 for acute criterion at a hardness of 400 mg/L.
3 ECA calculated using Equation 4 for acute criteria.
4 Fully mixed downstream ambient hardness is the mixture of the receiving water and effluent hardness at the applicable effluent fraction.
5 Fully mixed downstream ambient criteria are the acute criteria calculated using Equation 1 at the mixed hardness.
6 Fully mixed downstream ambient cadmium concentration is the mixture of the receiving water and effluent cadmium concentrations at the applicable effluent fraction.
7 The effluent fraction ranges from 1% at the high receiving water flow condition, to 100% at the lowest receiving water flow condition (i.e., effluent dominated).

Based on the procedures discussed above, Table F-11 lists all the CTR hardness-dependent metals and the associated ECA used in this Order.

Table F-11. Summary of ECA Evaluations for CTR Hardness-dependent Metals

CTR Metals	ECA (µg/L, total recoverable)[1]	
	acute	chronic
Copper	52	30
Chromium III	5,400	640
Cadmium	20	7.3
Lead	410	16
Nickel	1,500	170
Silver	27	--
Zinc	390	390

1 Results shown as two significant figures in accordance with CTR.

3. Determining the Need for WQBELs

a. **Constituents with No Reasonable Potential**. WQBELs are not included in this Order for constituents that do not demonstrate reasonable potential (i.e., constituents were not detected in the effluent or receiving water at concentrations exceeding applicable water quality criteria); however, monitoring for those pollutants is established in this Order as required by the SIP. If the results of

effluent monitoring demonstrate reasonable potential, this Order may be reopened and modified by adding an appropriate effluent limitation.

Most constituents with no reasonable potential are not discussed in this Order. However, the following constituents were found to have no reasonable potential after assessment of the data:

i. **Aluminum**

Aluminum is the third most abundant element in the earth's crust and is ubiquitous in both soils and aquatic sediments. When mobilized in surface waters, aluminum has been shown to be toxic to various fish species. However, the potential for aluminum toxicity in surface waters is directly related to the chemical form of aluminum present, and the chemical form is highly dependent on water quality characteristics that ultimately determine the mechanism of aluminum toxicity. Surface water characteristics, including pH, temperature, colloidal material, fluoride and sulfate concentrations, and total organic carbon, all influence aluminum speciation and its subsequent bioavailability to aquatic life. Calcium [hardness] concentrations in surface water may also reduce aluminum toxicity by competing with monomeric aluminum (Al^{3+}) binding to negatively charged fish gills.

(a) **WQO**. The Code of Federal Regulations promulgated criteria for priority toxic pollutants for California's surface waters as part of section 131.38 Establishment of Numeric Criteria for Priority Toxic Pollutants for the State of California (California Toxics Rule or CTR), including metals criteria. However, aluminum criteria were not promulgated as part of the CTR. Absent numeric aquatic life criteria for aluminum, WQBEL's in the Central Valley Region's NPDES permits are based on the Basin Plans' narrative toxicity objective. The Basin Plans' *Policy for Application of Water Quality Objectives* requires the Central Valley Water Board to consider, "*on a case-by-case basis, direct evidence of beneficial use impacts, all material and relevant information submitted by the discharger and other interested parties, and relevant numerical criteria and guidelines developed and/or published by other agencies and organizations. In considering such criteria, the Board evaluates whether the specific numerical criteria which are available through these sources and through other information supplied to the Board, are relevant and appropriate to the situation at hand and, therefore, should be used in determining compliance with the narrative objective*." Relevant information includes, but is not limited to (1) USEPA Ambient Water Quality Criteria (NAWQC) and subsequent Correction, (2) site-specific conditions of Deuel Drain, the receiving water, and (3) site-specific aluminum studies conducted by dischargers within the Central Valley Region. (Basin Plan, p. IV.-17.00; see also, 40 CFR 122.44(d)(vi).)

USEPA NAWQC. USEPA recommended the NAWQC aluminum acute criterion at 750 µg/L based on test waters with a pH of 6.5 to 9.0. USEPA also recommended the NAWQC aluminum chronic criterion at 87 µg/L based upon the following two toxicity tests. All test waters contained hardness at 12 mg/L as $CaCO_3$.

(1) Acute toxicity tests at various aluminum doses were conducted in various acidic waters (pH 6.0 – 6.5) on 159- and 160-day old striped bass. The 159-day old striped bass showed no mortality in waters

with pH at 6.5 and aluminum doses at 390 µg/L, and the 160-day old striped bass showed 58% mortality at a dose of 174.4 µg/L in same pH waters. However, the 160-day old striped bass showed 98% mortality at aluminum dose of 87.2 µg/L in waters with pH at 6.0, which is USEPA's basis for the 87 µg/L chronic criterion. The varied results draw into question this study and the applicability of the NAWQC chronic criterion of 87 µg/L.

(2) Chronic toxicity effects on 60-day old brook trout were evaluated in circumneutral pH waters (6.5-6.9 pH) in five cells at various aluminum doses (4, 57, 88, 169, and 350 µg/L). Chronic evaluation started upon hatching of eyed eggs of brook trout, and their weight and length were measure after 45 days and 60 days. The 60-day old brook trout showed 24% weight loss at 169 µg/L of aluminum and 4% weight loss at 88 µg/L of aluminum, which is the basis for USEPA's chronic criteria. Though this test study shows chronic toxic effects 4% reduction in weight after exposure for 60-days, the chronic criterion is based on 4-day exposure; so again, the applicability of the NAWQC chronic criterion of 87 µg/L is questionable.

Site-specific Conditions. Effluent and Deuel Drain monitoring data indicate that the pH and hardness values are not similar to the low pH and hardness conditions under which the chronic criterion for aluminum was developed, as shown in the table below, and therefore, the Central Valley Water Board does not expect aluminum to be as reactive in Deuel Drain as in the previously described toxicity tests. The pH of Deuel Drain, the receiving water, ranged from 6.7 to 8.14 with an average of 7.57 based on 111 monitoring results obtained between 13 December 2008 and 30 April 2013. These water conditions are circumneutral pH where aluminum is predominately in the form of $Al(OH)_3$ and non-toxic to aquatic life. The hardness of Deuel Drain ranged from 116 mg/L to 1,290 mg/L based on five samples, which is above the conditions, and thus less toxic, than the tests used to develop the chronic criterion.

Parameter	Units	Test Conditions for Applicability of Chronic Criterion	Effluent	Receiving Water
pH	standard units	6.0 – 6.5	6.58 – 8.33	6.7 – 8.14
Hardness, Total (as $CaCO_3$)	mg/L	12	564 – 590	116 – 1,290
Aluminum, Total Recoverable	µg/L	87.2 - 390	<19 – 51	1,080 – 1,440

Local Environmental Conditions and Studies. Twenty-one site-specific aluminum toxicity tests have been conducted within the Central Valley Region. The pH and hardness of Deuel Drain are similar, as shown in the table below, and thus the results of these site-specific aluminum toxicity tests are relevant and appropriate for Deuel Drain. As shown in the following table, all EC_{50} toxicity study result values are at concentrations of aluminum above 5,000 µg/L. Thus, the toxic effects of aluminum in surface waters within the Central Valley Region, including Deuel Drain, is less toxic (or less reactive) to aquatic species than demonstrated in the toxicity tests that USEPA used for the basis of establishing the chronic criterion of 87 µg/L. This new information, and review of the toxicity tests

USEPA used to establish the chronic criterion, indicates that 87 µg/L is overly stringent and not applicable to Deuel Drain.

Central Valley Region Site-Specific Toxicity Data

Discharger (City)	Species	Test Waters	Hardness Value	Total Aluminum EC_{50} Value	pH	WER
Auburn	*Ceriodaphnia dubia*	Effluent	99	>5270	7.44	>19.3
	" "	Surface Water	16	>5160	7.44	>12.4
Manteca	" "	Surface Water/Effluent	124	>8800	9.14	N/C
	" "	Effluent	117	>8700	7.21	>27.8
	" "	Surface Water	57	7823	7.58	25.0
	" "	Effluent	139	>9500	7.97	>21.2
	" "	Surface Water	104	>11000	8.28	>24.5
	" "	Effluent	128	>9700	7.78	>25.0
	" "	Surface Water	85	>9450	7.85	>25.7
	" "	Effluent	106	>11900	7.66	>15.3
	" "	Surface Water	146	>10650	7.81	>13.7
Modesto	" "	Surface Water/Effluent	120/156	31604	8.96	211
Yuba City	" "	Surface Water/Effluent	114/164[1]	>8000	7.60/7.46	>53.5
Placer County	" "	Effluent	150	>5000	7.4 – 8.7	>13.7
Manteca	*Daphnia magna*	Surface Water/Effluent	124	>8350	9.14	N/C
Modesto	" "	Surface Water/Effluent	120/156	>11900	8.96	>79.6
Yuba City	" "	Surface Water/Effluent	114/164[1]	>8000	7.60/7.46	>53.5
Manteca	*Oncorhynchus mykiss* (rainbow trout)	Surface Water/Effluent	124	>8600	9.14	N/C
Auburn	" "	Surface Water	16	>16500	7.44	N/C
Modesto	" "	Surface Water/Effluent	120/156	>34250	8.96	>229
Yuba City	" "	Surface Water/Effluent	114/164[1]	>8000	7.60/7.46	>53.5

[1] Hardness values may be biased high because the EDTA titrimetic method is subject to interferences that measure as hardness (barium, cadmium, lead, manganese, strontium, and zinc will be measured as hardness) producing hardness numbers that are likely to be greater than the calculation of hardness based upon the ICP analysis of calcium and magnesium. Upstream receiving water hardness ranged from 30 to 50.9 mg/L as $CaCO_3$ between January 2008 and August 2011. Furthermore, the upstream receiving water hardness was 37 mg/L as $CaCO_3$ on 4 October 2005, 7 days prior to the Feasibility Assessment (first phase of a Water Effects Ratio study) sample collection date of 11 October 2005. It is likely that matrix interferences from other metals were responsible for the unexpected hardness values reported by Pacific EcoRisk.

The Discharger has not conducted a toxicity test for aluminum; however, the Cities of Manteca and Modesto conducted toxicity tests in the San Joaquin River. As shown, the test water quality characteristics of the San Joaquin River near Manteca and Modesto are similar for pH and hardness in Deuel Drain, with the hardness ranging from 57 to 156 mg/L as $CaCO_3$ in comparison to the hardness of the Deuel Drain near the discharge that averages 758 mg/L as $CaCO_3$. Thus results of site-specific studies conducted on the San Joaquin River near Manteca and Modesto would represent conservative assumptions for the Deuel Drain near the discharge. Therefore, the Cities of Manteca and Modesto aluminum toxicity test studies are relevant and represent conservative assumptions in this case for use in determining the specific numerical criteria to be used in determining compliance with the Basin Plan's narrative toxicity objective. The Cities of Manteca and Modesto aluminum toxicity study resulted in a minimum site-specific aluminum objective of 7,823 µg/L.

Thus, these results support the conclusion that the 87 µg/L chronic criterion is overly stringent for Deuel Drain near the discharge.

State of California Department of Public Health (DPH) has established Secondary Maximum Contaminant Levels (MCLs) to assist public drinking water systems in managing their drinking water for aesthetic conditions such as taste, color, and odor. The Secondary MCL for aluminum is 200 µg/L. USEPA has also adopted an NAWQC acute criterion of 750 µg/L for the protection of aquatic life.

(b) **RPA Results**. For priority pollutants, the SIP dictates the procedures for conducting the RPA. Aluminum is not a priority pollutant. Therefore, the Central Valley Water Board is not restricted to one particular RPA method. Due to the site-specific conditions of the discharge, the Central Valley Water Board had used its judgment in determining the appropriate method for conducting the RPA for this non-priority pollutant constituent. The most stringent objective is the Secondary MCL, which is derived from human welfare considerations (e.g., taste, odor, laundry staining), not for toxicity. Secondary MCLs are drinking water standards contained in Title 22 of the California Code of Regulations. Title 22 requires compliance with these standards on an annual average basis, when sampling at least quarterly. To be consistent with how compliance with the standards is determined, the RPA was conducted based on the calendar annual average effluent aluminum concentrations.

The maximum observed annual average effluent concentration for aluminum was 20 µg/L (minimum MDL 19 µg/L, minimum RL 50 µg/L) based on four samples collected between 22 December 2010 and 30 April 2013. Effluent aluminum is consistently less than the concentrations in the receiving water and below the Secondary MCL and the NAWQC acute criterion. Therefore, the Central Valley Water Board finds the discharge does not have reasonable potential to cause or contribute to an exceedance in the receiving water and the Facility is adequately controlling the discharge of aluminum.

ii. **Barium**

(a) **WQO**. Table III-1 of the Basin Plan contains a site-specific numeric objective for the Sacramento-San Joaquin Delta for dissolved barium of 100 µg/L as a maximum concentration.

(b) **RPA Results**. For priority pollutants, the SIP dictates the procedures for conducting the RPA. Barium is not a priority pollutant. Therefore, the Central valley Water Board is not restricted to one particular RPA method. Due to the site-specific conditions of the discharge, the Central Valley Water Board has used its judgment in determining the appropriate method for conducting the RPA for this non-priority pollutant. The most stringent objective is the Basin Plan's site-specific objective of 100 µg/L. The RPA for this non-CTR constituent was conducted based on maximum effluent barium concentrations.

The maximum concentration for barium in the effluent was 97.5 µg/L (minimum MDL 0.1 µg/L, minimum RL 5 µg/L) based on four samples collected between 22 December 2010 and 30 April 2013. Although the receiving water contains barium exceeding the Basin Plan objective, the

effluent barium is consistently less than the concentration in the receiving water and the Basin Plan objective. Therefore, the Central Valley Water Board finds the discharge does not have reasonable potential to cause or contribute to an exceedance in the receiving water and the Facility is adequately controlling the discharge of barium

iii. **Bromoform**

(a) **WQO.** The CTR includes a criterion for bromoform of 4.3 µg/L for the protection of human health for waters from which both water and organisms are consumed. WDR's Order R5-2008-0164 contained limitations for bromoform based on the CTR criterion for the protection of human health.

(b) **RPA Results.** Bromoform was not detected in the effluent (minimum MDL 0.1 µg/L, minimum RL 0.5 µg/L) based on 33 samples collected between 22 December 2010 and 30 April 2013. Bromoform was not detected in the upstream receiving water (minimum MDL 0.1 µg/L, minimum RL 0.5 µg/L) based on four samples collected between 13 December 2008 and 30 April 2013. Therefore, bromoform in the discharge does not demonstrate reasonable potential to cause or contribute to an in-stream excursion above the CTR criteria and the effluent limitations for bromoform have not been retained in this Order. Removal of these effluent limitations is in accordance with federal anti-backsliding regulations (see section IV.D.3 of the Fact Sheet).

iv. **Chlorodibromomethane**

(a) **WQO**. The CTR includes a criterion for chlorodibromomethane of 0.41 µg/L for the protection of human health for waters from which both water and organisms are consumed. WDR's Order R5-2008-0164 contained limitations for chlorodibromomethane based on the CTR criterion for the protection of human health.

(b) **RPA Results.** Chlorodibromomethane was not detected in the effluent (minimum MDL 0.08 µg/L, minimum RL 0.5 µg/L) based on 33 samples collected between 22 December 2010 and 30 April 2013. Chlorodibromomethane was not detected in the upstream receiving water (minimum MDL 0.08 µg/L, minimum RL 0.5 µg/L) based on four samples collected between 13 December 2008 and 30 April 2013. Therefore, chlorodibromomethane in the discharge does not demonstrate reasonable potential to cause or contribute to an in-stream excursion above the CTR criteria, and the effluent limitations for chlorodibromomethane have not been retained in this Order. Removal of these effluent limitations is in accordance with federal anti-backsliding regulations (see section IV.D.3 of the Fact Sheet).

v. **Chlorine, Total Residual**

(a) **WQO**. USEPA developed NAWQC for protection of freshwater aquatic life for chlorine residual. The recommended 4-day average (chronic) and 1-hour average (acute) criteria for chlorine residual are 0.011 mg/L and 0.019 mg/L, respectively. These criteria are protective of the Basin Plan's narrative toxicity objective. WDR's Order R5-2008-0164 contained effluent limitations for chlorine residual based on the Basin Plan's narrative objective.

(b) **RPA Results.** Chlorine residual was not detected in the effluent based on 861 samples collected between 22 December 2010 and 30 April 2013. The Discharger converted from chlorine disinfection to UV disinfection in October 2010, and only uses chlorine to periodically clean the membrane filters. During cleaning, there is no effluent flow out of the Facility; rather, the cleaning water is rerouted back to the headworks for treatment. Because chlorine was not detected in the effluent and the Discharger has changed disinfection methods, chlorine in the discharge does not demonstrate reasonable potential to cause or contribute to an in-stream excursion above the Basin Plan narrative objective, and effluent limitations for chlorine residual are not retained in this Order. Monitoring is required, however, during times when chlorine is used to clean membrane filters. Removal of these effluent limitations is in accordance with federal anti-backsliding regulations (see section IV.D.3 of the Fact Sheet).

vi. **Diazinon and Chlorpyrifos**

(a) **WQO**. The Central Valley Water Board completed a TMDL for diazinon and chlorpyrifos in the Sacramento – San Joaquin Delta Waterways and amended the Basin Plan to include diazinon and chlorpyrifos waste load allocations and water quality objectives. The Basin Plan Amendment for the Control of Diazinon and Chlorpyrifos Runoff into the Sacramento – San Joaquin Delta was adopted by the Central Valley Water Board on 23 June 2006 and became effective on 10 October 2007.

The amendments "…*modifies Basin Plan Chapter III (Water Quality Objectives) to establish site specific number objectives for diazinon and chlorpyrifos in the Delta Waterways.*" The amendment also "…*identifies the requirements to meet the additive formula already in Basin Plan Chapter IV (Implementation), for the additive toxicity of diazinon and chlorpyrifos*."

The amendment states that "T*he waste load allocations for all NPDES-permitted dischargers…shall not exceed the sum (S) of one (1) as defined below.*

$$S = \frac{C_d}{WQO_d} + \frac{C_c}{WQO_c} \leq 1.0$$

Where:

C_d *= diazinon concentration in µg/L of point source discharge*

C_c *= chlorpyrifos concentration in µg/L of point source discharge*

WQO_d *= acute or chronic diazinon water quality objective in µg/L*

WQO_c *= acute or chronic chlorpyrifos water quality objective in µg/L*

Available samples collected within the applicable averaging period for the water quality objective will be used to determine compliance with the allocations and loading capacity. For purposes of calculating the sum (S) above, analytical results that are reported as 'non-detectable' concentrations are considered to be zero."

Appendix A of the Diazinon and Chlorpyrifos TMDL lists waterways subject to the TMDL and includes Deuel Drain.

(b) **RPA Results.** Diazinon and chlorpyrifos were not detected in the effluent based on four samples collected between 22 December 2010 and 30 April 2013. Diazinon and chlorpyrifos were not detected in the upstream receiving water based on four samples collected between 13 December 2008 and 30 April 2013. However, due to the TMDL for diazinon and chlorpyrifos in the Delta, WQBELs for these constituents are required. The TMDL waste load allocation applies to all NPDES discharges to Delta waterways and will serve as the basis for WQBELs.

(c) **WQBELs.** WQBELs for diazinon and chlorpyrifos are required based on the TMDL for diazinon and chlorpyrifos for the Delta. Therefore, this Order includes effluent limits calculated based on the waste load allocations contained in the TMDL, as follows:

(1) Average Monthly Effluent Limit

$$S_{AMEL} = \frac{C_{D\ AVG}}{0.079} + \frac{C_{C\ AVG}}{0.012} \leq 1.0$$

$C_{D\text{-}avg}$ = average monthly diazinon effluent concentration in µg/L

$C_{C\text{-}avg}$ = average monthly chlorpyrifos effluent concentration in µg/L

(2) Maximum Daily Effluent Limit

$$S_{MDEL} = \frac{C_{D\ MAX}}{0.16} + \frac{C_{C\ MAX}}{0.025} \leq 1.0$$

$C_{D\text{-}max}$ = maximum daily diazinon effluent concentration in µg/L

$C_{C\text{-}max}$ = maximum daily chlorpyrifos effluent concentration µg/L

(d) **Plant Performance and Attainability**. Diazinon and chlorpyrifos were not detected in the effluent. The Central Valley Water Board concludes therefore, that immediate compliance with these effluent limitations is feasible.

vii. **Dichlorobromomethane**

(a) **WQO**. The CTR includes a criterion for dichlorobromomethane of 0.56 µg/L for the protection of human health for waters from which both water and organisms are consumed. WDR's Order R5-2008-0164 contained limitations for dichlorobromomethane based on the CTR criterion for the protection of human health.

(b) **RPA Results.** Dichlorobromomethane was detected but not quantified in one effluent sample at an estimated concentration of 0.1 µg/L (minimum MDL 0.1 µg/L, minimum RL 0.5 µg/L) based on 33 samples collected between 22 December 2010 and 30 April 2013. Dichlorobromomethane was not detected in the upstream receiving water based on four samples collected between 13 December 2008 and 30 April 2013. Therefore, dichlorobromomethane in the discharge does not demonstrate reasonable potential to cause or contribute to an in-stream excursion above the CTR criteria, and the effluent limitations for dichlorobromomethane have not been retained in this Order. Removal of these effluent limitations is in accordance with federal anti-backsliding regulations (see section IV.D.3 of the Fact Sheet).

viii. **Iron**

(a) **WQO**. The Secondary MCL – Consumer Acceptance Limit for iron is 300 µg/L, which is used to implement the Basin Plan's chemical constituent objective for the protection of municipal and domestic supply. The Basin Plan contains a site-specific numeric objective for the Delta of 300 µg/L (maximum concentration) for iron, expressed as dissolved metal, based on the Secondary MCL.

(b) **RPA Results**. For priority pollutants, the SIP dictates the procedures for conducting the RPA. Iron is not a priority pollutant. Therefore, the Central Valley Water Board is not restricted to one particular RPA method. Due to the site-specific conditions of the discharge, the Central Valley Water Board has used its judgment in determining the appropriate method for conducting the RPA for this non-priority pollutant constituent. The most stringent objective is the site-specific Basin Plan objective based on the Secondary MCL, which is derived from human welfare considerations (e.g., taste, odor, laundry staining), not for toxicity. Secondary MCLs are drinking water standards contained in Title 22 of the California Code of Regulations. Title 22 requires compliance with these standards on an annual average basis, when sampling at least quarterly. To be consistent with how compliance with the standards is determined, the RPA was conducted based on the calendar annual average effluent iron concentrations.

The maximum annual average effluent iron concentration was 7.6 µg/L (minimum MDL 11 µg/L, minimum RL 12 µg/L) based on four samples collected between 22 December 2010 and 30 April 2013. Effluent iron is consistently less than the concentrations in the receiving water and below the Secondary MCL. Therefore, the Central Valley Water Board finds the discharge does not have reasonable potential to cause or contribute to an exceedance in the receiving water and the Facility is adequately controlling the discharge of iron.

ix. **Manganese**

(a) **WQO**. The Secondary MCL – Consumer Acceptance Limit for manganese is 50 µg/L, which is used to implement the Basin Plan's chemical constituent objective for the protection of municipal and domestic supply. The Basin Plan contains a site-specific numeric objective for the Delta of 50 µg/L (maximum concentration) for manganese, expressed as dissolved metal, based on the Secondary MCL.

(b) **RPA Results**. For priority pollutants, the SIP dictates the procedures for conducting the RPA. Manganese is not a priority pollutant. Therefore, the Central Valley Water Board is not restricted to one particular RPA method. Due to the site-specific conditions of the discharge, the Central Valley Water Board has used its judgment in determining the appropriate method for conducting the RPA for this non-priority pollutant constituent. The most stringent objective is the site-specific Basin Plan objective based on the Secondary MCL, which is derived from human welfare considerations (e.g., taste, odor, laundry staining), not for toxicity. Secondary MCLs are drinking water standards contained in Title 22 of the California Code of Regulations. Title 22 requires compliance with these standards on an annual average basis, when sampling at least quarterly. To be consistent with how compliance with the standards is determined, the RPA was

conducted based on the calendar annual average effluent manganese concentrations.

The maximum annual average manganese concentration was 34 µg/L (minimum MDL 1.3 µg/L, minimum RL 10 µg/L) based on four samples collected between 22 December 2010 and 30 April 2013. Effluent manganese is consistently less than the concentrations in the receiving water and below the Secondary MCL. Therefore, the Central Valley Water Board finds the discharge does not have reasonable potential to cause or contribute to an exceedance in the receiving water and the Facility is adequately controlling the discharge of manganese.

b. **Constituents with Limited Data**. Reasonable potential cannot be determined for the following constituents because effluent data are limited or ambient background concentrations are not available or insufficient.

i. **Lead, Total Recoverable**

(a) **WQO**. The CTR includes hardness-dependent criteria for the protection of freshwater aquatic life for lead. These criteria for lead are presented in dissolved concentrations, as 1-hour acute criteria and 4-day chronic criteria. USEPA recommends conversion factors to translate dissolved concentrations to total concentrations. Default USEPA translators were used for the receiving water and effluent.

(b) **RPA Results.** Section IV.C.2 of this Fact Sheet includes procedures for conducting the RPA for hardness-dependent CTR metals, such as lead. The CTR includes hardness-dependent criteria for lead for the receiving water. The RPA was conducted using the upstream receiving water hardness to calculate the criteria for comparison to the maximum ambient background concentration, and likewise using the reasonable worst-case downstream hardness to compare the MEC. The table below shows the specific criteria used for the RPA.

Table F-12. Lead RPA

	CTR Chronic Criterion (Total Recoverable)	Maximum Concentration (Total Recoverable)	Reasonable Potential? (Y/N)
Receiving Water	3.8 µg/L[1]	J 4.0 µg/L	Inconclusive[2]
Effluent	16 µg/L[3]	J 5.5 µg/L	No[4]

1 Based on lowest observed upstream hardness of 116 mg/L (as $CaCO_3$).
2 Per Section 1.3, step 4 of the SIP.
3 Based on reasonable worst-case downstream hardness of 400 mg/L (as $CaCO_3$).
4 Per Section 1.3, step 6 of the SIP.

Total recoverable lead was detected but not quantified in the effluent in two out of four effluent samples collected between 22 December 2010 and 30 April 2013 (see table below). Total recoverable lead was detected but not quantified in the upstream receiving water in three out of four effluent samples collected between 13 December 2008 and 30 April 2013 (see table below). Since the effluent and receiving water data was detected but not quantified, the data is insufficient per Section 1.2 of the SIP.

Table F-13. Summary of Effluent and Receiving Water Data for Lead

Sample Date	Method Detection Level (MDL)	Reporting Level (RL)	Lead Effluent Result
Effluent Data			
27 January 2011	1.3	7	J 2.4
26 April 2011	1.3	7	ND
19 July 2011	1.3	7	ND
25 October 2011	1.3	7	J 5.5
Receiving Water Data			
27 January 2011	1.3	7	J 4
26 April 2011	1.3	7	J 2.2
19 July 2011	1.3	7	ND
25 October 2011	1.3	7	J 1.6

SIP Section 2.4.2 states that the Minimum Level (ML) is the lowest quantifiable concentration in a sample based on the proper application of all method-based analytical procedures and the absence of any matrix interferences.

(1) Required MLs are listed in Appendix 4 of the SIP. Where more than one ML is listed in Appendix 4, the discharger may select any one of the cited analytical methods for compliance determination. The selected ML used for compliance determination is referred to as the Reporting Level (RL).

(2) SIP Section 1.2 requires that the Regional Board use all available, valid, relevant, representative data and information, as determined by the Regional Board, to implement the SIP. SIP Section 1.2 further states that the Regional Board has the discretion to consider if any data are inappropriate or insufficient for use in implementing the SIP.

(3) Data reported below an RL indicates the data may not be valid due to possible matrix interferences during the analytical procedure.

(4) Further, SIP Section 2.4.5 (Compliance Determination) supports the insufficiency of data reported below the ML or RL. In part it states, "*Dischargers shall be deemed out of compliance with an effluent limitation, for reporting and administrative enforcement purposes, if the concentration of the priority pollutant in the monitoring sample is greater than the effluent limitation and greater than or equal to the RL*." Thus, if submitted data is below the RL, that data cannot be used to determine compliance with effluent limitations.

(5) Data reported at an RL that does not conform to the SIP MLs is not considered valid data for use in determining reasonable potential. Therefore, in accordance with Section 1.2 of the SIP, the Central Valley Water Board has determined that data reported at an RL that does not conform to the SIP MLs is inappropriate and insufficient to be used to determine reasonable potential.

(6) In implementing its discretion, the Central Valley Water Board is not finding that reasonable potential does not exist; rather the Central Valley Water Board cannot make such a determination given the

invalid data. Therefore, the Central Valley Water Board will require additional monitoring for such constituents until such time a determination can be made in accordance with the SIP policy.

SIP Appendix 4 cites several MLs for lead. The MLs below the applicable criteria cited for lead are 0.5 µg/L and 2 µg/L. The Discharger used an analytical method that was not as sensitive as the ML required by the SIP. The effluent and receiving water results were all non-detects or estimated values (i.e., detected by not quantified). Therefore, the submitted effluent and receiving water lead data is inappropriate and insufficient to determine reasonable potential under the SIP.

Section 1.3, Step 6 of the SIP states that if the receiving water concentration exceeds the criteria and the pollutant is detected in the effluent, an effluent limitation is required. However; as discussed in detail above, insufficient effluent and receiving water data is available at this time to justify establishing an effluent limitation for lead.

Section 1.3, Step 8 of the SIP allows the Central Valley Water Board to require additional monitoring for a pollutant in place of an effluent limitation if data are unavailable or insufficient. Instead of limitations, additional monitoring has been established for lead in both the effluent and the receiving water. Should monitoring results indicate that the discharge has the reasonable potential to cause or contribute to an exceedance of a water quality standard, this Order may be reopened and modified by adding appropriate effluent limitations.

ii. **Selenium, Total Recoverable**

(a) **WQO**. The CTR includes acute and criteria for selenium for the protection of freshwater aquatic life of 20 µg/L and 5 µg/L, respectively.

(b) **RPA Results**. Selenium was detected but not quantified in the effluent at an estimated concentration of 17.3 µg/L, in one out of four samples collected between 22 December 2010 and 30 April 2013. Selenium was detected but not quantified in the upstream receiving water at an estimated concentration of 3.6 µg/L in one out of four samples collected between 13 December 2008 and 30 April 2013. Since the effluent and receiving water data was detected but not quantified, the data is insufficient per Section 1.2 of the SIP.

Table F-14. Summary of Effluent and Receiving Water Data for Selenium

Sample Date	Method Detection Level (MDL)	Reporting Level (RL)	Selenium Effluent Result
Effluent Data			
27 January 2011	2.6	20	J 17.3
26 April 2011	2.6	20	ND
19 July 2011	2.6	20	ND
25 October 2011	2.6	20	ND
Receiving Water Data			
27 January 2011	2.6	20	ND
26 April 2011	2.6	20	ND
19 July 2011	2.6	20	ND

Sample Date	Method Detection Level (MDL)	Reporting Level (RL)	Selenium Effluent Result
25 October 2011	2.6	20	J 3.6

SIP Section 2.4.2 states that the ML is the lowest quantifiable concentration in a sample based on the proper application of all method-based analytical procedures and the absence of any matrix interferences.

(1) Required MLs are listed in Appendix 4 of the SIP. Where more than one ML is listed in Appendix 4, the discharger may select any one of the cited analytical methods for compliance determination. The selected ML used for compliance determination is referred to as the RL.

(2) SIP Section 1.2 requires that the Regional Board use all available, valid, relevant, representative data and information, as determined by the Regional Board, to implement the SIP. SIP Section 1.2 further states that the Regional Board has the discretion to consider if any data are inappropriate or insufficient for use in implementing the SIP.

(3) Data reported below an RL indicates the data may not be valid due to possible matrix interferences during the analytical procedure.

(4) Further, SIP Section 2.4.5 (Compliance Determination) supports the insufficiency of data reported below the ML or RL. In part it states, "*Dischargers shall be deemed out of compliance with an effluent limitation, for reporting and administrative enforcement purposes, if the concentration of the priority pollutant in the monitoring sample is greater than the effluent limitation and greater than or equal to the RL*." Thus, if submitted data is below the RL, that data cannot be used to determine compliance with effluent limitations.

(5) Data reported at an RL that does not conform to the SIP MLs is not considered valid data for use in determining reasonable potential. Therefore, in accordance with Section 1.2 of the SIP, the Central Valley Water Board has determined that data reported at an RL that does not conform to the SIP MLs is inappropriate and insufficient to be used to determine reasonable potential.

(6) In implementing its discretion, the Central Valley Water Board is not finding that reasonable potential does not exist; rather the Central Valley Water Board cannot make such a determination given the invalid data. Therefore, the Central Valley Water Board will require additional monitoring for such constituents until such time a determination can be made in accordance with the SIP policy.

SIP Appendix 4 cites several MLs for selenium. The MLs below the applicable criteria cited for selenium are 1 µg/L, 2 µg/L, and 5 µg/L. The Discharger used an analytical method that was not as sensitive as the ML required by the SIP. The effluent and receiving water results were all non-detects or estimated values (i.e., detected by not quantified). Therefore, the submitted effluent and receiving water selenium data is inappropriate and insufficient to determine reasonable potential under the SIP.

Section 1.3, Step 8 of the SIP allows the Central Valley Water Board to require additional monitoring for a pollutant in place of an effluent limitation if data are unavailable or insufficient. Instead of limitations, additional monitoring has been established for selenium in both the effluent and the receiving water. Should monitoring results indicate that the discharge has the reasonable potential to cause or contribute to an exceedance of a water quality standard, this Order may be reopened and modified by adding appropriate effluent limitations.

iii. **Thallium, Total Recoverable**

(a) **WQO**. The CTR includes criteria of 1.7 µg/L for the protection of human health for waters from which both water and organisms are consumed.

(b) **RPA Results**. Thallium was detected but not quantified in the effluent at an estimated concentration of 13 µg/L, in one out of four samples collected between 22 December 2013 and 30 April 2013. Thallium was detected but not quantified in the upstream receiving water at an estimated concentration of 7.1 µg/L, in one out of four samples collected between 13 December 2008 and 30 April 2013. Since the effluent and receiving water data was detected but not quantified, the data is insufficient per Section 1.2 of the SIP.

Table F-15. Summary of Effluent and Receiving Water Data for Thallium

Sample Date	Method Detection Level (MDL)	Reporting Level (RL)	Thallium Effluent Result
Effluent Data			
27 January 2011	4.5	20	J 13.4
26 April 2011	4.5	20	ND
19 July 2011	4.5	20	ND
25 October 2011	4.5	20	ND
Receiving Water Data			
27 January 2011	4.5	20	ND
26 April 2011	4.5	20	J 7.1
19 July 2011	4.5	20	ND
25 October 2011	4.5	20	ND

SIP Section 2.4.2 states that the ML is the lowest quantifiable concentration in a sample based on the proper application of all method-based analytical procedures and the absence of any matrix interferences.

(1) Required MLs are listed in Appendix 4 of the SIP. Where more than one ML is listed in Appendix 4, the discharger may select any one of the cited analytical methods for compliance determination. The selected ML used for compliance determination is referred to as the RL.

(2) SIP Section 1.2 requires that the Regional Board use all available, valid, relevant, representative data and information, as determined by the Regional Board, to implement the SIP. SIP Section 1.2 further states that the Regional Board has the discretion to consider if any data are inappropriate or insufficient for use in implementing the SIP.

(3) Data reported below an RL indicates the data may not be valid due to possible matrix interferences during the analytical procedure.

(4) Further, SIP Section 2.4.5 (Compliance Determination) supports the insufficiency of data reported below the ML or RL. In part it states, "*Dischargers shall be deemed out of compliance with an effluent limitation, for reporting and administrative enforcement purposes, if the concentration of the priority pollutant in the monitoring sample is greater than the effluent limitation and greater than or equal to the RL*." Thus, if submitted data is below the RL, that data cannot be used to determine compliance with effluent limitations.

(5) Data reported at an RL that does not conform to the SIP MLs is not considered valid data for use in determining reasonable potential. Therefore, in accordance with Section 1.2 of the SIP, the Central Valley Water Board has determined that data reported at an RL that does not conform to the SIP MLs is inappropriate and insufficient to be used to determine reasonable potential.

(6) In implementing its discretion, the Central Valley Water Board is not finding that reasonable potential does not exist; rather the Central Valley Water Board cannot make such a determination given the invalid data. Therefore, the Central Valley Water Board will require additional monitoring for such constituents until such time a determination can be made in accordance with the SIP policy.

SIP Appendix 4 cites several MLs for thallium. The MLs below the applicable criteria cited for thallium are 0.5 µg/L and 2 µg/L. The Discharger used an analytical method that was not as sensitive as the ML required by the SIP. The effluent and receiving water results were all non-detects or estimated values (i.e., detected by not quantified). Therefore, the submitted effluent and receiving water thallium data is inappropriate and insufficient to determine reasonable potential under the SIP.

Section 1.3, Step 6 of the SIP states that if the receiving water concentration exceeds the criteria and the pollutant is detected in the effluent, an effluent limitation is required. However; as discussed in detail above, insufficient effluent and receiving water data is available at this time to justify establishing an effluent limitation for thallium.

Section 1.3, Step 8 of the SIP allows the Central Valley Water Board to require additional monitoring for a pollutant in place of an effluent limitation if data are unavailable or insufficient. Instead of limitations, additional monitoring has been established for thallium in both the effluent and the receiving water. Should monitoring results indicate that the discharge has the reasonable potential to cause or contribute to an exceedance of a water quality standard, this Order may be reopened and modified by adding appropriate effluent limitations.

c. **Constituents with Reasonable Potential**. The Central Valley Water Board finds that the discharge has a reasonable potential to cause or contribute to an in-stream excursion above a water quality standard for ammonia, BOD_5, copper, cyanide, methylmercury, nitrate plus nitrite, pH, temperature, total coliform organisms, and TSS. WQBELs for these constituents are included in this Order. A summary of the

RPA is provided in Attachment G, and a detailed discussion of the RPA for each constituent is provided below.

i. **Ammonia**

(a) **WQO.** The NAWQC for the protection of freshwater aquatic life for total ammonia, recommends acute (1-hour average; criteria maximum concentration or CMC) standards based on pH and chronic (30-day average; criteria continuous concentration or CCC) standards based on pH and temperature. USEPA also recommends that no 4-day average concentration should exceed 2.5 times the 30-day CCC. USEPA found that as pH increased, both the acute and chronic toxicity of ammonia increased. Salmonids were more sensitive to acute toxicity effects than other species. However, while the acute toxicity of ammonia was not influenced by temperature, it was found that invertebrates and young fish experienced increasing chronic toxicity effects with increasing temperature. Because the Deuel Drain has a beneficial use of cold freshwater habitat and the presence of salmonids and early fish life stages in the Sacramento-San Joaquin Delta is well-documented, the recommended criteria for waters where salmonids and early life stages are present, were used.

The maximum permitted effluent pH is 8.5 as the Basin Plan objective for pH in the receiving stream is the range of 6.5 to 8.5. In order to protect against the worst-case short-term exposure of an organism, a pH value of 8.5 was used to derive the acute criterion. The resulting acute criterion is 2.14 mg/L.

A chronic criterion was calculated for each day when paired temperature data and pH were measure using the downstream receiving water data for temperature and pH. Rolling 30-day average criteria were calculated from downstream receiving water data using the criteria calculated for each day and the minimum observed 30-day average criterion was established as the applicable 30-day average chronic criterion, or 30-day CCC. The most stringent 30-day CCC was 0.78 mg/L (as N) based on the downstream receiving water. The 4-day average concentration is derived in accordance with the USEPA criterion as 2.5 times the 30-day CCC. Based on the 30-day CCC of 0.78 mg/L (as N), the 4-day average concentration that should not be exceeded is 1.95 mg/L.

(b) **RPA Results.** The Facility treats domestic wastewater. Untreated domestic wastewater contains ammonia in concentrations that, without treatment, would be harmful to fish and would violate the Basin Plan narrative toxicity objective if discharged to the receiving water. Reasonable potential therefore exists and effluent limitations are required.

Federal regulations at 40 CFR §122.44(d)(1)(i) requires that, "*Limitations must control all pollutants or pollutant parameters (either conventional, nonconventional, or toxic pollutants) which the Director determines are or may be discharged at a level which will cause, have the reasonable potential to cause, or contribute to an excursion above any State water quality standard, including State narrative criteria for water quality*." For priority pollutants, the SIP dictates the procedures for conducting the RPA. Ammonia is not a priority pollutant. Therefore, the Central Valley Water Board is not restricted to one particular RPA method. Due to the site-

specific conditions of the discharge, the Central Valley Water Board has used professional judgment in determining the appropriate method for conducting the RPA for this non-priority pollutant constituent.

USEPA's September 2010 NPDES Permit Writer's Manual, page 6-30, states, "*State implementation procedures might allow, or even require, a permit writer to determine reasonable potential through a qualitative assessment process without using available facility-specific effluent monitoring data or when such data are not available…A permitting authority might also determine that WQBELs are required for specific pollutants for all facilities that exhibit certain operational or discharge characteristics (e.g., WQBELs for pathogens in all permits for POTWs discharging to contact recreational waters)*." USEPA's TSD also recommends that factors other than effluent data should be considered in the RPA, "*When determining whether or not a discharge causes, has the reasonable potential to cause, or contributes to an excursion of a numeric or narrative water quality criterion for individual toxicants or for toxicity, the regulatory authority can use a variety of factors and information where facility-specific effluent monitoring data are unavailable. These factors also should be considered with available effluent monitoring data*." With regard to POTWs, USEPA recommends that, "*POTWs should also be characterized for the possibility of chlorine and ammonia problems*." (TSD, p. 50).

Nitrification is a biological process that converts ammonia to nitrite and nitrite to nitrate. Denitrification is a process that converts nitrate to nitrite or nitric oxide and then to nitrous oxide or nitrogen gas, which is then released to the atmosphere. The Discharger currently uses nitrification to remove ammonia from the waste stream. Inadequate or incomplete nitrification may result in the discharge of ammonia to the receiving stream. Ammonia is known to cause toxicity to aquatic organisms in surface waters. Discharges of ammonia in concentrations that produce detrimental physiological responses to human, plant, animal, or aquatic life would violate the Basin Plan narrative toxicity objective. Although the Discharger nitrifies the discharge, inadequate or incomplete nitrification creates the potential for ammonia to be discharged and provides the basis for the discharge to have a reasonable potential to cause or contribute to an in-stream excursion above the NAWQC. Therefore, the Central Valley Water Board finds the discharge has reasonable potential for ammonia and WQBELs are required.

(c) **WQBELs.** Order R5-2008-0164 established an average monthly effluent limitation (AMEL) of 0.7 mg/L and a maximum daily effluent limitation (MDEL) of 2.2 mg/L for ammonia. The development of fixed WQBELs for ammonia can be complex due to the variable ammonia criteria. In State Water Board WQ 2009-0003 for the City of Tracy, the State Water Board determined that the permit lacked an adequate rationale for development of the fixed WQBELs for ammonia using the median receiving water pH and remanded the permit to the Central Valley Water Board to either provide sufficient justification for the effluent limits or modify the limits. In the above approach for determining the appropriate chronic criterion, an assumption is made that the compliant discharge (i.e., meets ammonia

criteria) causes a non-compliant situation in the receiving water due to changes in pH and/or temperature that result in a more stringent chronic criterion. In this approach, the ammonia concentrations in the effluent are assumed to remain the same downstream of the discharge, whereas the pH and temperature change. This is a conservative approach and is used when there is insufficient ammonia receiving water data to determine the actual ambient ammonia concentrations. For the Discharger, there is monthly ammonia monitoring in the receiving water, along with pH and temperature monitoring.

In a similar situation for the City of Stockton, receiving water ammonia concentrations were compared to paired 30-day average chronic ammonia criteria to determine if the discharge caused the receiving water criterion to be exceeded in the receiving water. Based on the receiving water data, the ammonia criteria were never exceeded and it was determined that the current ammonia effluent limits were adequately protective. In the case of Stockton where this evaluation was used to justify current effluent limits, the permit was petitioned and the State Water Board agreed with this approach.

This same evaluation was conducted for the Discharger. Receiving water ammonia, pH, and temperature data were evaluated since implementation of the current ammonia effluent limits. The figure below shows the paired effluent and downstream receiving water ammonia concentrations at Monitoring Locations EFF-001 and RSW-002, respectively, based on data collected between 22 December 2010 and 30 April 2013.

Figure F-1. Paired Effluent and Downstream Receiving Water Ammonia Data

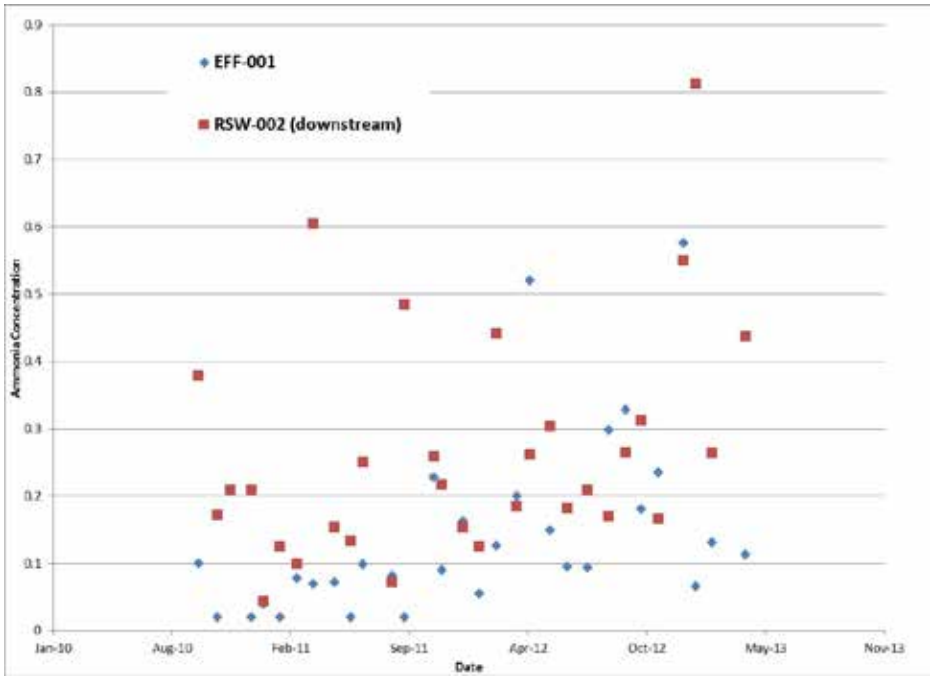

As demonstrated in the figure, the downstream receiving water ammonia concentrations have been below the 30-day chronic criterion of 0.78 mg/L in all but one sample based on 31 samples. On the date of the downstream exceedance (8 January 2013), the effluent ammonia concentration of 0.066 mg/L was well below the 30-day chronic criterion. This demonstrates that the discharge is not causing exceedances of the ammonia criteria in the receiving water. Therefore, based on this information, it is justified to maintain the final effluent limits for ammonia. During each permit renewal, the ammonia effluent limitations will be re-evaluated to ensure they are adequately protective of the aquatic life beneficial uses. This Order contains final AMEL and MDEL for ammonia of 0.7 mg/L and 2.2 mg/L, respectively (See Attachment H for WQBEL calculations).

(d) **Plant Performance and Attainability.** Analysis of the effluent data shows that the maximum concentration of ammonia in the effluent of 1.28 mg/L is less than the applicable MDEL and the maximum average monthly concentration of 0.51 mg/L is less than the applicable AMEL. The Central Valley Water Board concludes, therefore, that immediate compliance with these effluent limitations is feasible.

ii. **Copper**

(a) **WQO.** The CTR includes hardness-dependent-criteria for the protection of freshwater aquatic life for copper. These criteria for copper are presented in dissolved concentrations, as 1-hour acute criteria and 4-day chronic criteria. USEPA recommends conversion factors to translate dissolved concentrations to total concentrations.

The Basin Plan includes a site-specific objective for the Sacramento – San Joaquin Delta of 10 µg/L (dissolved) as a maximum concentration. Using the default U.S. EPA translator, the Basin Plan objective for copper is 10.4 µg/L (total recoverable).

Footnote 4, page 3, of the Introduction of the SIP states, "*If a water quality objective and a CTR criterion are in effect for the same priority pollutant, the more stringent of the two applies*." The Basin Plan objective cannot be directly compared to the CTR criteria to determine which is the most stringent objective because they have different averaging periods and the CTR criteria vary with hardness. In this situation, the RPA has been conducted considering both the CTR criteria and the Basin Plan site-specific objective.

(b) RPA Results. Section IV.C.2 of this Fact Sheet includes procedures for conducting the RPA for hardness-dependent CTR metals, such as copper. The CTR includes hardness-dependent criteria for copper for the receiving water. The RPA was conducted using the upstream receiving water hardness to calculate the criteria for comparison to the maximum ambient background concentration, and likewise using the reasonable worst-case downstream hardness to compare the MEC. The table below shows the specific criteria used for the RPA.

Table F-16. Copper RPA

	CTR Chronic Criteria (Total Recoverable)	Site-Specific BP Objective (Total Recoverable)	Maximum Concentration	Reasonable Potential? (Y/N)
Receiving Water	11 µg/L[1]	10.4 µg/L	16 µg/L[2]	Yes
Effluent	30 µg/L[3]	10.4 µg/L	11.4 µg/L[4]	Yes

[1] Based on lowest observed upstream receiving water hardness of 116 mg/L (as $CaCO_3$).
[2] Maximum ambient background receiving water copper concentration based on four samples collected between 13 December 2008 and 30 April 2013.
[3] Based on reasonable worst-case downstream hardness of 384 mg/L (as $CaCO_3$)
[4] MEC for copper based on four samples collected between 22 December 2010 and 30 April 2013.

Based on the available data, copper in the discharge has reasonable potential to cause or contribute to an in-stream excursion above the CTR criteria for the protection of freshwater aquatic life criterion and site-specific Basin Plan objective.

(c) **WQBELs.** In accordance with the SIP, the more stringent of the two applicable criteria, the CTR criteria and the Basin Plan objective, was used to determine reasonable potential. The resulting WQBELs that are calculated based on the CTR criteria result in WQBELs exceeding the Basin Plan objective (see table below).

WQBELs	AMEL	MDEL
CTR Chronic Criterion (Aquatic Life)	25	49
Basin Plan Objective[1]	--	10 µg/L

[1] Fourth Edition of the Water Quality Control Plan (Basin Plan) for the Sacramento River and San Joaquin River Basins, Table III-1, Copper. Applicable to the Sacramento – San Joaquin Delta, Appendix 42 Waterways, 87, Paradise Cut, and 98, San Joaquin River, to which Deuel Drain is tributary.

Consequently, the WQBELs have been developed using the BP objective resulting in an MDEL 10 µg/L (total recoverable). The SIP requires AEMLs and MDELs for CTR constituents. The site-specific objective for copper is established as a maximum concentration. Therefore, it is impractical to calculate and AMEL for copper using the Basin Plan objective. Therefore, an AMEL of 25 µg/L was calculated using CTR criteria. This Order includes an AMEL and MDEL of 25 µg/L and 10 µg/L, respectively, as total recoverable copper.

(d) **Plant Performance and Attainability**. Analysis of the effluent data shows that the MEC is greater than applicable WQBELs. Based on the sample results for the effluent, the limitations appear to put the Discharger in immediate non-compliance.

iii. **Cyanide**

(a) **WQO**. The CTR includes maximum 1-hour average and 4-day average criteria of 22 µg/L and 5.2 µg/L, respectively, for cyanide, for the protection of freshwater aquatic life.

(b) **RPA Results**. The MEC for cyanide was 7.92 µg/L (minimum MDL 0.9 µg/L, minimum RL 5 µg/L) based on four samples collected between 22 December 2010 and 30 April 2013. The maximum receiving water cyanide concentration was 21.8 µg/L (minimum MDL 0.9 µg/L, minimum RL 5 µg/L) based on four samples collected between 13 December 2008 and 30 April 2013. Therefore, cyanide in the discharge has a reasonable potential to cause or contribute to an in-stream excursion above the CTR criteria for the protection of freshwater aquatic life.

(c) **WQBELs.** This Order contains a final AMEL and MDEL for cyanide of 4.3 µg/L and 8.5 µg/L, respectively, based on the CTR criterion for the protection of freshwater aquatic life.

(d) **Plant Performance and Attainability.** Analysis of the effluent data shows that the MEC is greater than applicable WQBELs. Based on the sample results for the effluent, the limitations appear to put the Discharger in immediate non-compliance.

iv. **Mercury and Methylmercury**

(a) **WQO.** The Basin Plan contains fish tissue objectives for all Delta waterways listed in Appendix 43 of the Basin Plan that states, "…*the average methylmercury concentrations shall not exceed 0.08 and 0.24 mg methylmercury/kg, wet weight, in muscle tissue of trophic level 3 and 4 fish, respectively (150-500 mm total length). The average methylmercury concentrations shall not exceed 0.03 mg methylmercury/kg, wet weight, in whole fish less than 50 mm in length.*" The Delta Mercury Control Program contains aqueous methylmercury waste load allocations that are calculated to achieve the fish tissue objectives. Methylmercury reductions are assigned to discharges with concentrations of methylmercury greater than 0.06 ng/L (the concentration of methylmercury in water to meet the fish tissue objectives). The Facility is allocated 0.021 g/year of methylmercury, as listed in Table IV.7B of the Basin Plan.

The CTR contains a human health criterion (based on a threshold dose level causing neurological effects in infants) of 50 ng/L for total mercury for

waters from which both water and aquatic organisms are consumed. However, in 40 CFR Part 131, USEPA acknowledges that the human health criteria may not be protective of some aquatic or endangered species and that "…*more stringent mercury limits may be determined and implemented through use of the State's narrative criterion.*" In the CTR, USEPA reserved the mercury criteria for freshwater and aquatic life and may adopt new criteria at a later date.

(b) **RPA Results.** Section 1.3 of the SIP states, "*The RWQCB shall conduct the analysis in this section for each priority pollutant with an applicable criterion or objective,* ***excluding priority pollutants for which a Total Maximum Daily Load (TMDL) has been developed, to determine if a water quality-based effluent limitation is required in the discharger's permit***." (emphasis added) Although a RPA is not required, based on the available effluent and receiving water methylmercury data, it appears the discharge is causing or contributing to an exceedance of the concentration of methylmercury in water to meet the site-specific fish tissue objectives in the Basin Plan.

Effluent and receiving water monitoring data for methylmercury is not available. The MEC for total mercury was 0.028 µg/L based on 32 samples collected between 22 December 2010 and 30 April 2013 (minimum MDL 0.05 µg/L, minimum RL 0.2 µg/L). Total mercury was not detected in the upstream receiving water based on four samples collected between 13 December 2008 and 30 April 2013 (minimum MDL 0.05 µg/L, minimum RL 0.2 µg/L).

(c) **WQBELs.** The Basin Plan's Delta Mercury Control Program includes wasteload allocations for POTWs in the Delta, including for the Discharger. This Order contains final WQBELs for methylmercury based on the wasteload allocation. The total calendar annual methylmercury load shall not exceed 0.021 grams.

(d) **Plant Performance and Attainability.** Based on available effluent mercury data, the Central Valley Water Board finds the Discharger is unable to immediately comply with the final WQBELs for methylmercury. Therefore, a compliance schedule in accordance with the State Water Board's Compliance Schedule Policy and the Delta Mercury Control Program has been established in this Order.

v. **Nitrate and Nitrite**

(a) **WQO.** DPH has adopted Primary MCLs for the protection of human health for nitrite and nitrate that are equal to 1 mg/L and 10 mg/L (measured as nitrogen), respectively. DPH has also adopted a primary MCL of 10 mg/L for the sum of nitrate and nitrite, measured as nitrogen.

USEPA has developed a primary MCL and an MCL goal of 1 mg/L for nitrite (as nitrogen). For nitrate, USEPA has developed Drinking Water Standards (10 mg/L as Primary MCL) and NAWQC for protection of human health (10 mg/L for non-cancer health effects). Recent toxicity studies have indicated a possibility that nitrate is toxic to aquatic organisms.

(b) **RPA Results.** The Facility treats domestic wastewater. Untreated domestic wastewater contains ammonia in concentrations that, if

untreated, will be harmful to fish and will violate the Basin Plan's narrative toxicity objective. This Order, therefore, requires removal of ammonia (i.e., nitrification). Nitrification is a biological process that converts ammonia to nitrate and nitrite, and will result in effluent nitrate concentrations above the Primary MCL for nitrate plus nitrite. Nitrate concentrations in a drinking water supply above the Primary MCL threatens the health of human fetuses and newborn babies by reducing the oxygen-carrying capacity of the blood (methemoglobinemia). Reasonable potential for nitrate and nitrite therefore exists and WQBELs are required.

Federal regulations at 40 CFR §122.44(d)(1)(i) requires that, "*Limitations must control all pollutants or pollutant parameters (either conventional, nonconventional, or toxic pollutants) which the Director determines are or may be discharged at a level which will cause, have the reasonable potential to cause, or contribute to an excursion above any State water quality standard, including State narrative criteria for water quality*." For priority pollutants, the SIP dictates the procedures for conducting the RPA. Nitrate and nitrite are not priority pollutants. Therefore, the Central Valley Water Board is not restricted to one particular RPA method. Due to the site-specific conditions of the discharge, the Central Valley Water Board has used professional judgment in determining the appropriate method for conducting the RPA for this non-priority pollutant constituent.

USEPA's September 2010 NPDES Permit Writer's Manual, page 6-30, states, "*State implementation procedures might allow, or even require, a permit writer to determine reasonable potential through a qualitative assessment process without using available facility-specific effluent monitoring data or when such data are not available…A permitting authority might also determine that WQBELs are required for specific pollutants for all facilities that exhibit certain operational or discharge characteristics (e.g., WQBELs for pathogens in all permits for POTWs discharging to contact recreational waters)."* USEPA's TSD also recommends that factors other than effluent data should be considered in the RPA, "*When determining whether or not a discharge causes, has the reasonable potential to cause, or contributes to an excursion of a numeric or narrative water quality criterion for individual toxicants or for toxicity, the regulatory authority can use a variety of factors and information where facility-specific effluent monitoring data are unavailable. These factors also should be considered with available effluent monitoring data*." With regard to POTWS, USEPA recommends that, "*POTWs should also be characterized for the possibility of chlorine and ammonia problems*." (TSD, p. 50).

The concentration of nitrogen in raw domestic wastewater is sufficiently high that the resultant treated wastewater has a reasonable potential to exceed or threaten to exceed the primary MCL for nitrate plus nitrite unless the wastewater is treated for nitrogen removal, and therefore an effluent limit for nitrate plus nitrite is required. Denitrification is a process that converts nitrate to nitrite or nitric oxide and then to nitrous oxide or nitrogen gas, which is then released to the atmosphere. The Discharger currently uses nitrification/denitrification to remove ammonia, nitrite, and nitrate from the waste stream. Inadequate or incomplete denitrification

may result in the discharge of nitrate and/or nitrite to the receiving stream. Discharges of nitrate plus nitrite in concentrations that exceed the Primary MCL would violate the Basin Plan narrative chemical constituents objective. Although the Discharger denitrifies the discharge, inadequate or incomplete denitrification creates the potential for nitrate and nitrite to be discharged and provides the basis for the discharge to have a reasonable potential to cause or contribute to an in-stream excursion above the Primary MCL. Therefore, the Central Valley Water Board finds the discharge has reasonable potential for nitrate plus nitrite and WQBELs are required.

The maximum effluent nitrite concentration was 1.87 mg/L, based on four samples collected between 22 December 2010 and 30 April 2013. The maximum upstream receiving water nitrite concentration was 0.43 mg/L based on four samples collected between 13 December 2008 and 30 April 2013. Therefore, nitrite in the discharge has a reasonable potential to cause or contribute to an in-stream excursion above the Primary MCL.

(c) **WQBELs.** This Order contains a final AMEL for nitrate plus nitrite of 10 mg/L (total as N), based on the Primary MCL. This effluent limitation is included in this Order to assure the treatment process adequately nitrifies and denitrifies the waste stream to protect the beneficial use of municipal and domestic supply. This Order also contains a final AMEL of 1 mg/L for nitrite based on the Primary MCL.

(d) **Plant Performance and Attainability.** The Facility was designed to provide nitrification and denitrification. The Central Valley Water Board concludes, therefore, that immediate compliance with these effluent limitations is feasible.

vi. **Pathogens**

(a) **WQO.** DPH has developed reclamation criteria, CCR, Division 4, Chapter 3 (Title 22), for the reuse of wastewater. Title 22 requires that for spray irrigation of food crops, parks, playgrounds, schoolyards, and other areas of similar public access, wastewater be adequately disinfected, oxidized, coagulated, clarified, and filtered, and that the effluent total coliform levels not exceed 2.2 MPN/100 mL as a 7-day median; 23 MPN/100 mL, not to be exceeded more than once in a 30-day period; and 240 MPN/100 mL, at any time.

Title 22 also requires that recycled water used as a source of water supply for non-restricted recreational impoundments be disinfected tertiary recycled water that has been subjected to conventional treatment. A non-restricted recreational impoundment is defined as "*…an impoundment of recycled water, in which no limitations are imposed on body-contact water recreational activities.*" Title 22 is not directly applicable to surface waters; however, the Central Valley Water Board finds that it is appropriate to apply an equivalent level of treatment to that required by the DPH's reclamation criteria because the receiving water is used for irrigation of agricultural land and for contact recreation purposes. The stringent disinfection criteria of Title 22 are appropriate since the undiluted effluent may be used for the irrigation of food crops and/or for body-contact water recreation. Coliform organisms are intended as an indicator of the

effectiveness of the entire treatment train and the effectiveness of removing other pathogens.

(b) **RPA Results.** Raw domestic wastewater inherently contains human pathogens that threaten human health and life, and constitute a threatened pollution and nuisance under CWC Section 13050 if discharged untreated to the receiving water. Reasonable potential for pathogens therefore exists and WQBELs are required.

Federal regulations at 40 CFR §122.44(d)(1)(i) requires that, "*Limitations must control all pollutants or pollutant parameters (either conventional, nonconventional, or toxic pollutants) which the Director determines are or may be discharged at a level which will cause, have the reasonable potential to cause, or contribute to an excursion above any State water quality standard, including State narrative criteria for water quality*." For priority pollutants, the SIP dictates the procedures for conducting the RPA. Pathogens are not priority pollutants. Therefore, the Central Valley Water Board is not restricted to one particular RPA method. Due to the site-specific conditions of the discharge, the Central Valley Water Board has used professional judgment in determining the appropriate method for conducting the RPA for this non-priority pollutant constituent.

USEPA's September 2010 NPDES Permit Writer's Manual, page 6-30, states, "*State implementation procedures might allow, or even require, a permit writer to determine reasonable potential through a qualitative assessment process without using available facility-specific effluent monitoring data or when such data are not available…A permitting authority might also determine that WQBELs are required for specific pollutants for all facilities that exhibit certain operational or discharge characteristics (e.g., WQBELs for pathogens in all permits for POTWs discharging to contact recreational waters)."* USEPA's TSD also recommends that factors other than effluent data should be considered in the RPA, "*When determining whether or not a discharge causes, has the reasonable potential to cause, or contributes to an excursion of a numeric or narrative water quality criterion for individual toxicants or for toxicity, the regulatory authority can use a variety of factors and information where facility-specific effluent monitoring data are unavailable. These factors also should be considered with available effluent monitoring data*." (TSD, p. 50).

The beneficial uses of Deuel Drain include municipal and domestic supply, water contact recreation, and agricultural irrigation supply, and there is, at times, less than 20:1 dilution. To protect these beneficial uses, the Central Valley Water Board finds that the wastewater must be disinfected and adequately treated to prevent disease. Although the Discharger provides disinfection, inadequate or incomplete disinfection creates the potential for pathogens to be discharged. Therefore, the Central Valley Water Board finds the discharge has reasonable potential for pathogens and WQBELs are required.

(c) **WQBELs.** In accordance with the requirements of Title 22, this Order includes effluent limitations for total coliform organisms of 2.2 MPN/100 mL as a 7-day median; 23 MPN/100 mL, not to be exceeded

more than once in a 30-day period; and 240 MPN/100 mL as an instantaneous maximum.

The tertiary treatment process, or equivalent, is capable of reliably treating wastewater to a turbidity level of 2 nephelometric turbidity units (NTU) as a daily average. Failure of the filtration system such that virus removal is impaired would normally result in increased particles in the effluent, which result in higher effluent turbidity. Turbidity has a major advantage for monitoring filter performance. Coliform testing, by comparison, is not conducted continuously and requires several hours, to days, to identify high coliform concentrations. Therefore, to ensure compliance with the DPH recommended Title 22 disinfection criteria, weekly average specifications are impracticable for turbidity. This Order includes operational specifications for turbidity of 0.2 NTU, not to be exceeded more than 5 percent of the time within a 24-hour period; and 0.5 NTU at any time.

This Order contains effluent limitations for total coliform organisms, BOD_5, and TSS, operating specifications for turbidity, and requires a tertiary level of treatment, or equivalent, necessary to protect the beneficial uses of the receiving water. The Central Valley Water Board has previously considered the factors in Water Code section 13241 in establishing these requirements.

Final WQBELs for BOD_5 and TSS are based on the technical capability of the tertiary process, which is necessary to protect the beneficial uses of the receiving water. BOD_5 is a measure of the amount of oxygen used in the biochemical oxidation of organic matter. The tertiary treatment standards for BOD_5 and TSS are indicators of the effectiveness of the tertiary treatment process. The principal design parameter for wastewater treatment plants is the daily BOD_5 and TSS loading rates and the corresponding removal rate of the system. The application of tertiary treatment processes results in the ability to achieve lower levels for BOD_5 and TSS than the secondary standards currently prescribed. Therefore, this Order requires AMELs for BOD_5 and TSS of 10 mg/L, which is technically based on the capability of a tertiary system. In addition to the average weekly and average monthly effluent limitations, a daily maximum effluent limitation for BOD_5 and TSS is included in the Order to ensure that the treatment works are not organically overloaded and operate in accordance with design capabilities.

(d) **Plant Performance and Attainability**. This Facility provides tertiary treatment using membrane filtration and UV disinfection. The Central Valley Water Board concludes, therefore, that immediate compliance with these effluent limitations is feasible.

vii. **pH**

(a) **WQO.** The Basin Plan includes a water quality objective for surface waters (except for Goose Lake) that the *"…pH shall not be depressed below 6.5 nor raised above 8.5.*"

(b) **RPA Results.** Raw domestic wastewater inherently has variable pH. Additionally, some wastewater treatment processes can increase or decrease wastewater pH which if not properly controlled, would violate the

Basin Plan's numeric objective for pH in the receiving water. Therefore, reasonable potential exists for pH and WQBELs are required.

Federal regulations at 40 CFR §122.44(d)(1)(i) requires that, "*Limitations must control all pollutants or pollutant parameters (either conventional, nonconventional, or toxic pollutants) which the Director determines are or may be discharged at a level which will cause, have the reasonable potential to cause, or contribute to an excursion above any State water quality standard, including State narrative criteria for water quality*." For priority pollutants, the SIP dictates the procedures for conducting the RPA. pH is not a priority pollutant. Therefore, the Central Valley Water Board is not restricted to one particular RPA method. Due to the site-specific conditions of the discharge, the Central Valley Water Board has used professional judgment in determining the appropriate method for conducting the RPA for this non-priority pollutant constituent.

USEPA's September 2010 NPDES Permit Writer's Manual, page 6-30, states, "*State implementation procedures might allow, or even require, a permit writer to determine reasonable potential through a qualitative assessment process without using available facility-specific effluent monitoring data or when such data are not available…A permitting authority might also determine that WQBELs are required for specific pollutants for all facilities that exhibit certain operational or discharge characteristics (e.g., WQBELs for pathogens in all permits for POTWs discharging to contact recreational waters)*." USEPA's TSD also recommends that factors other than effluent data should be considered in the RPA, "*When determining whether or not a discharge causes, has the reasonable potential to cause, or contributes to an excursion of a numeric or narrative water quality criterion for individual toxicants or for toxicity, the regulatory authority can use a variety of factors and information where facility-specific effluent monitoring data are unavailable. These factors also should be considered with available effluent monitoring data*." (TSD, p. 50).

The Facility treats domestic wastewater. Based on 841 samples taken from 22 December 2010 to 30 April 2013, the maximum effluent pH reported was 8.33 and the minimum was 6.58. Although the Discharger has proper pH controls in place, the pH for the Facility's influent varies due to the nature of municipal sewage, which provides the basis for the discharge to have a reasonable potential to cause or contribute to an in-stream excursion above the Basin Plan's numeric objective for pH in the receiving water. Therefore, WQBELs for pH are required in this Order.

(c) **WQBELs.** Effluent limitations for pH of 6.5 as an instantaneous minimum and 8.5 as an instantaneous maximum are included in this Order based on protection of the Basin Plan objectives for pH.

(d) **Plant Performance and Attainability.** Analysis of the effluent data shows that the range of the pH concentration is 6.58 – 8.33 standard units, which is less than the applicable WQBELs. The Central Valley Water Board concludes, therefore, that immediate compliance with these effluent limitations is feasible.

viii. **Salinity**

(a) **WQO.** The Basin Plan contains a chemical constituent objective that incorporates state MCLs, contains a narrative objective, and contains numeric water quality objectives for electrical conductivity, total dissolved solids, sulfate, and chloride. In addition, USEPA has developed National Ambient Water Quality Criteria for chloride for the protection of freshwater aquatic life.

Table F-17. Salinity Water Quality Criteria/Objectives

Parameter	Secondary MCL[1]	Bay-Delta Plan	USEPA NAWQC	Effluent	
				Average[2]	Maximum
EC (µmhos/cm)	900, 1600, 2200	700/1000[3]	NA	2,244	3,550
TDS (mg/L)	500, 1000, 1500	NA	NA	1,595	1,780
Sulfate (mg/L)	250, 500, 600	NA	NA	202	254
Chloride (mg/L)	250, 500, 600	NA	230 4-day 860 1-hr	802	1,020

[1] The Secondary MCLs are stated as a recommended level, upper level, and a short-term maximum level.
[2] Maximum calendar annual average.
[3] The Bay-Delta Plan includes water quality objectives at three locations in the South Delta for electrical conductivity, which includes a 14-day running average electrical conductivity of 700 µmhos/cm from 1 April – 31 August and a 14-day running average electrical conductivity of 1,000 µmhos/cm from 1 September – 31 March. The State Water Board is developing revised salinity objectives for municipal dischargers.

(1) **Chloride.** The Secondary MCL for chloride is 250 mg/L, as a recommended level, 500 mg/L as an upper level, and 600 mg/L as a short-term maximum. USEPA Ambient Water Quality Criteria for chloride recommends acute (1-hour) and chronic (4-day) criteria for protection of freshwater aquatic life of 860 mg/L and 230 mg/L, respectively.

(2) **Electrical Conductivity.** The Secondary MCL for EC is 900 µmhos/cm as a recommended level, 1600 µmhos/cm as an upper level, and 2200 µmhos/cm as a short-term maximum.

The Bay-Delta Plan includes water quality objectives for EC for the South Delta in the vicinity of the discharge[1]. On 1 June 2011, the Superior Court for Sacramento County entered a judgment and peremptory writ of mandate in the matter of *City of Tracy v. State Water Resources Control Board* (Case No; 34-2009-8000-392-CU-WM-GDS), ruling that the South Delta salinity objectives shall not apply to the City of Tracy and other municipal dischargers pending reconsideration of the South Delta salinity objectives and adoption of a proper program of implementation that includes municipal dischargers. The State Water Board is currently considering new salinity and flow objectives in the South Delta that will address the Court Order.

[1] The Bay-Delta Plan includes water quality objectives at three locations in the South Delta for EC. The water quality objectives are a 14-day running average EC of 700 µmhos/cm from 1 April – 31 August and a 14-day running average EC of 1,000 µmhos/cm from 1 September – 31 March.

Therefore, at the time this Order was adopted the South Delta salinity objectives are not applicable to the Discharger.

(3) **Sulfate.** The secondary MCL for sulfate is 250 mg/L as a recommended level, 500 mg/L as an upper level, and 600 mg/L as a short-term maximum.

(4) **Total Dissolved Solids.** The Secondary MCL for TDS is 500 mg/L as a recommended level, 1000 mg/L as an upper level, and 1500 mg/L as a short-term maximum.

(b) **RPA Results**

(1) **Chloride.** Chloride concentrations in the effluent ranged from 511 mg/L to 1,020 mg/L, with an average of 662 mg/L. Background concentrations in Deuel Drain ranged from 52 mg/L to 1,520 mg/L, with an average of 663 mg/L, for five samples collected by the Discharger from 13 December 2008 through 30 April 2013. The applicable water quality objective to implement the Basin Plan's narrative chemical constituents objective for salinity is the Bay-Delta Plan south Delta salinity objectives, which are under development.

(2) **Electrical Conductivity.** A review of the Discharger's monitoring reports shows an average effluent EC of 1,912 µmhos/cm, with a range from 652 µmhos/cm to 3,550 µmhos/cm. The background receiving water EC averaged 2,994 µmhos/cm. The applicable water quality objective to implement the Basin Plan's narrative chemical constituents objective for salinity is the Bay-Delta Plan south Delta salinity objectives.

(3) **Sulfate.** Sulfate concentrations in the effluent ranged from 154 mg/L to 254 mg/L, with an average of 202 mg/L. Background concentrations in Deuel Drain ranged from 51 mg/L to 1,970 mg/L, with an average of 724 mg/L. The applicable water quality objective to implement the Basin Plan's narrative chemical constituents objective for salinity is the Bay-Delta Plan south Delta salinity objectives, which are under development.

(4) **Total Dissolved Solids.** The average TDS effluent concentration was 1,369 mg/L with concentrations ranging from 1,070 mg/L to 1,780 mg/L. The background receiving water TDS ranged from 94 mg/L to 3,700 mg/L, with an average of 1,914 mg/L. The applicable water quality objective to implement the Basin Plan's narrative chemical constituents objective for salinity is the Bay-Delta Plan south Delta salinity objectives, which are under development.

(c) **WQBELs.** The State Water Board is currently revising the Bay-Delta Plan to include salinity objectives that would be applicable to the discharge. Since the Bay-Delta Plan will include the applicable salinity objectives to conduct the RPA, until completion of the update, the RPA cannot be completed properly.

Order R5-2008-0164 established effluent limitations based on the Bay-Delta Plan objectives for electrical conductivity for the South Delta. Since these objectives are not currently applicable, as described above, this

Order discontinues the effluent limitations contained in Order R5-2008-0164.

The Discharger has a reverse osmosis water treatment plant which is used to reduce contaminants and minerals in the source water. The reverse osmosis plant was offline for major repairs between 1 May 2010 and 24 January 2012, and is taken offline for approximately 1 week every 6 months for routine maintenance. During periods when the reverse osmosis plant is offline for maintenance, source water and effluent salinity concentrations are much higher. Thus, limited data is available to calculate a performance-based effluent limitation to ensure that the Discharger maintains effluent salinity at current levels. Therefore, pending the Bay Delta Plan amendment, in order to ensure the Discharger implements measures to reduce the salinity in its discharge, this Order also requires the Discharger develop and implement a Salinity Minimization Plan.

ix. **Temperature**

(a) **WQO.** The Thermal Plan requires that, "*The maximum temperature shall not exceed the natural receiving water temperature by more than 20°F*."

(b) **RPA Results.** Treated domestic wastewater is an elevated temperature waste, which could cause or threaten to cause the receiving water temperature to exceed temperature objectives established in the Thermal Plan. Therefore, reasonable potential exists for temperature and WQBELs are required.

Federal regulations at 40 CFR §122.44(d)(1)(i) requires that, "*Limitations must control all pollutants or pollutant parameters (either conventional, nonconventional, or toxic pollutants) which the Director determines are or may be discharged at a level which will cause, have the reasonable potential to cause, or contribute to an excursion above any State water quality standard, including State narrative criteria for water quality*." For priority pollutants, the SIP dictates the procedures for conducting the RPA. Temperature is not a priority pollutant. Therefore, the Central Valley Water Board is not restricted to one particular RPA method. Due to the site-specific conditions of the discharge, the Central Valley Water Board has used professional judgment in determining the appropriate method for conducting the RPA for this non-priority pollutant constituent.

USEPA's September 2010 NPDES Permit Writer's Manual, page 6-30, states, "*State implementation procedures might allow, or even require, a permit writer to determine reasonable potential through a qualitative assessment process without using available facility-specific effluent monitoring data or when such data are not available…A permitting authority might also determine that WQBELs are required for specific pollutants for all facilities that exhibit certain operational or discharge characteristics (e.g., WQBELs for pathogens in all permits for POTWs discharging to contact recreational waters)*." USEPA's TSD also recommends that factors other than effluent data should be considered in the RPA, "*When determining whether or not a discharge causes, has the reasonable potential to cause, or contributes to an excursion of a numeric or narrative water quality criterion for individual toxicants or for toxicity, the regulatory authority can use a variety of factors and information where facility-specific effluent monitoring data are unavailable. These factors also*

should be considered with available effluent monitoring data." (TSD, p. 50).

The Facility treats domestic wastewater, which is an elevated temperature waste. This provides the basis for the discharge to have a reasonable potential to cause or contribute to an excursion above Thermal Plan requirements.

(c) **WQBELs.** To ensure compliance with the Thermal Plan, an effluent limitation for temperature is included in this Order.

(d) **Plant Performance and Attainability.** Analysis of effluent data shows that the maximum effluent increase in temperature from the receiving water was 18ºF on 17 November 2009. The Central Valley Water Board thus concludes that immediate compliance with these effluent limitations is feasible.

4. WQBEL Calculations

a. This Order includes WQBELs for ammonia, BOD_5, copper, cyanide, diazinon and chlorpyrifos, methylmercury, nitrite, nitrate plus nitrite, pH, total coliform organisms, and TSS. The general methodology for calculating WQBELs based on the different criteria/objectives is described in subsections IV.C.4.b through e, below. See Attachment H for the WQBEL calculations.

b. **Effluent Concentration Allowance.** For each water quality criterion/objective, the ECA is calculated using the following steady-state mass balance equation from Section 1.4 of the SIP:

$$ECA = C + D(C - B) \quad \text{where } C>B, \text{ and}$$
$$ECA = C \quad \text{where } C \leq B$$

where:

ECA = effluent concentration allowance
D = dilution credit
C = the priority pollutant criterion/objective
B = the ambient background concentration.

According to the SIP, the ambient background concentration (B) in the equation above shall be the observed maximum with the exception that an ECA calculated from a priority pollutant criterion/objective that is intended to protect human health from carcinogenic effects shall use the arithmetic mean concentration of the ambient background samples. For ECAs based on MCLs, which implement the Basin Plan's chemical constituents objective and are applied as annual averages, an arithmetic mean is also used for B due to the long-term basis of the criteria.

c. **Basin Plan Objectives and MCLs.** For WQBELs based on site-specific numeric Basin Plan objectives or MCLs, the effluent limitations are applied directly as the ECA as either an MDEL, AMEL, or average annual effluent limitations, depending on the averaging period of the objective.

d. **Aquatic Toxicity Criteria.** WQBELs based on acute and chronic aquatic toxicity criteria are calculated in accordance with Section 1.4 of the SIP. The ECAs are converted to equivalent long-term averages (i.e., LTA_{acute} and $LTA_{chronic}$) using

statistical multipliers and the lowest LTA is used to calculate the AMEL and MDEL using additional statistical multipliers.

e. **Human Health Criteria.** WQBELs based on human health criteria, are also calculated in accordance with Section 1.4 of the SIP. The ECAs are set equal to the AMEL and a statistical multiplier was used to calculate the MDEL.

$$AMEL = mult_{AMEL}\left[\min\left(\overbrace{M_A ECA_{acute}}^{LTA_{acute}}, M_C ECA_{chronic}\right)\right]$$

$$MDEL = mult_{MDEL}\left[\min\left(M_A ECA_{acute}, \underbrace{M_C ECA_{chronic}}_{LTA_{chronic}}\right)\right]$$

$$MDEL_{HH} = \left(\frac{mult_{MDEL}}{mult_{AMEL}}\right) AMEL_{HH}$$

where:

$mult_{AMEL}$ = statistical multiplier converting minimum LTA to AMEL
$mult_{MDEL}$ = statistical multiplier converting minimum LTA to MDEL
M_A = statistical multiplier converting acute ECA to LTA_{acute}
M_C = statistical multiplier converting chronic ECA to $LTA_{chronic}$

Summary of Water Quality-Based Effluent Limitations
Discharge Point 001

Table F-18. Summary of Water Quality-Based Effluent Limitations

Parameter	Units	Effluent Limitations				
		Average Monthly	Average Weekly	Maximum Daily	Instantaneous Minimum	Instantaneous Maximum
Conventional Pollutants						
Biochemical Oxygen Demand (5-day at 25°C)	mg/L	10	15	20	--	--
	lbs/day[1]	52	78	103	--	--
pH	standard units	--	--	--	6.5	8.5
Total Suspended Solids	mg/L	10	15	20	--	--
	lbs/day[1]	52	78	103	--	--
Priority Pollutants						
Copper, Total Recoverable	µg/L	25	--	10	--	--
Cyanide, Total (as CN)	µg/L	4.3	--	8.5	--	--
Non-Conventional Pollutants						
Ammonia Nitrogen, Total (as N)	mg/L	0.7	--	2.2	--	--
	lbs/day[1]	3.6	--	11.4	--	--

Parameter	Units	Effluent Limitations				
		Average Monthly	Average Weekly	Maximum Daily	Instantaneous Minimum	Instantaneous Maximum
Diazinon and Chlorpyrifos	µg/L	[2]	--	[3]	--	--
Methylmercury	grams/year	0.021[4]	--	--	--	--
Nitrite Nitrogen, Total (as N)	mg/L	1.0	--	--	--	--
Nitrate plus Nitrite (as N)	mg/L	10	--	--	--	--
Temperature	ºF	--	--	20[5]	--	--
Total Coliform Organisms	MPN/100 mL	--	2.2[6]	23[7]	--	240

[1] Based on an average dry weather flow of 0.62 MGD.

[2] Average Monthly Effluent Limitation

$$S_{avg} = \frac{C_{D_avg}}{0.079} + \frac{C_{C_avg}}{0.012} \leq 1.0$$

$C_{D\ avg}$ = average monthly diazinon effluent concentration in µg/L
$C_{C\ avg}$ = average monthly chlorpyrifos effluent concentration in µg/L

[3] Maximum Daily Effluent Limitation

$$S_{max} = \frac{C_{D_max}}{0.16} + \frac{C_{C_max}}{0.025} \leq 1.0$$

$C_{D\ avg}$ = maximum daily diazinon effluent concentration in µg/L
$C_{C\ avg}$ = maximum daily chlorpyrifos effluent concentration in µg/L

[4] The total calendar annual load of methylmercury shall not exceed 0.021 grams.

[5] The maximum temperature of the discharge shall not exceed the natural receiving water temperature by more than 20ºF.

[6] Applied as a 7-day median effluent limitation.

[7] Not to be exceeded more than once in any 30-day period.

5. Whole Effluent Toxicity (WET)

For compliance with the Basin Plan's narrative toxicity objective, this Order requires the Discharger to conduct whole effluent toxicity testing for acute and chronic toxicity, as specified in the Monitoring and Reporting Program (Attachment E section V.). This Order also contains effluent limitations for acute toxicity and requires the Discharger to implement best management practices to investigate the causes of, and identify corrective actions to reduce or eliminate effluent toxicity.

a. **Acute Aquatic Toxicity.** The Basin Plan contains a narrative toxicity objective that states, "*All waters shall be maintained free of toxic substances in concentrations that produce detrimental physiological responses in human, plant, animal, or aquatic life*." (Basin Plan at page III-8.00. The Basin Plan also states that, "…*effluent limits based upon acute biotoxicity tests of effluents will be prescribed where appropriate…*".

For priority pollutants, the SIP dictates the procedures for conducting the RPA. Acute toxicity is not a priority pollutant. Therefore, the Central Valley Water Board is not restricted to one particular RPA method. Acute whole effluent toxicity is not a priority pollutant. Therefore, due to the site-specific conditions of the discharge, the Central Valley Water Board has used professional judgment in determining the appropriate method for conducting the RPA. USEPA's September 2010 NPDES

Permit Writer's Manual, page 6-30, states, "*State implementation procedures might allow, or even require, a permit writer to determine reasonable potential through a qualitative assessment process without using available facility-specific effluent monitoring data or when such data are not available…A permitting authority might also determine that WQBELs are required for specific pollutants for all facilities that exhibit certain operational or discharge characteristics (e.g., WQBELs for pathogens in all permits for POTWs discharging to contact recreational waters).*" Although the discharge has been consistently in compliance with the acute effluent limitations, the Facility is treats domestic wastewater containing ammonia and other acutely toxic pollutants. Acute toxicity effluent limits are required to ensure compliance with the Basin Plan's narrative toxicity objective.

USEPA Region 9 provided guidance for the development of acute toxicity effluent limitations in the absence of numeric water quality objectives for toxicity in its document titled "Guidance for NPDES Permit Issuance", dated February 1994. In section B.2. "Toxicity Requirements" (pgs. 14-15) it states that, "*In the absence of specific numeric water quality objectives for acute and chronic toxicity, the narrative criterion 'no toxics in toxic amounts' applies. Achievement of the narrative criterion, as applied herein, means that ambient waters shall not demonstrate for acute toxicity: 1) less than 90% survival, 50% of the time, based on the monthly median, or 2) less than 70% survival, 10% of the time, based on any monthly median. For chronic toxicity, ambient waters shall not demonstrate a test result of greater than 1 TUc*." Consistent with Order No. R5-2008-0164, effluent limitations for acute toxicity have been included in this Order as follows:

Acute Toxicity. Survival of aquatic organisms in 96-hour bioassays of undiluted waste shall be no less than:

Minimum for any one bioassay ---------- 70%
Median for any three consecutive bioassays ---------- 90%

b. **Chronic Aquatic Toxicity.** The Basin Plan contains a narrative toxicity objective that states, "*All waters shall be maintained free of toxic substances in concentrations that produce detrimental physiological responses in human, plant, animal, or aquatic life*." (Basin Plan at page III-8). As shown in the table below, based on chronic WET testing performed by the Discharger from 16 November 2010 through 4 March 2013, the discharge has reasonable potential to cause or contribute to an in-stream excursion above of the Basin Plan's narrative toxicity objective.

Table F-19. Whole Effluent Chronic Toxicity Testing Results

Date	**Fathead Minnow** *Pimephales promelas*		**Water Flea** *Ceriodaphnia dubia*		**Green Algae** *Selenastrum capricornutum*
	Survival (TUc)	Growth (TUc)	Survival (TUc)	Reproduction (TUc)	Growth (TUc)
11 January 2011	1	1	4	4	4
26 April 2011	2	1	1	1	8
3 April 2012	1	1	1	1	1.33
2 May 2012	--	--	--	--	9
16 May 2012	--	--	--	--	9
30 May 2012	--	--	--	--	>8
13 June 2012	--	--	--	--	4
10 July 2012	1	1	4	1	2

Date	Fathead Minnow *Pimephales promelas*		Water Flea *Ceriodaphnia dubia*		Green Algae *Selenastrum capricornutum*
	Survival (TUc)	Growth (TUc)	Survival (TUc)	Reproduction (TUc)	Growth (TUc)
13 August 2012	--	--	1	--	--
26 August 2012	--	--	--	1	--
10 September 2012	--	--	1	1	--
24 September 2012	--	--	1	--	--
8 October 2012	1	1	1	1	1
21 January 2013	--	--	1	1.33	--
18 February 2013	--	--	2	1	--
4 March 2013	1	1	1	1	1

No dilution has been granted for the chronic condition. Therefore, chronic toxicity testing results exceeding 1 chronic toxicity unit (TUc) demonstrates the discharge has a reasonable potential to cause or contribute to an exceedance of the Basin Plan's narrative toxicity objective.

The Monitoring and Reporting Program of this Order requires quarterly chronic WET monitoring for demonstration of compliance with the narrative toxicity objective. In addition to WET monitoring, the Special Provision in section VI.C.2.a includes a numeric toxicity monitoring trigger, requirements for accelerated monitoring, and requirements for Toxicity Reduction Evaluation (TRE) initiation if toxicity is demonstrated.

Numeric chronic WET effluent limitations have not been included in this Order. The SIP contains implementation gaps regarding the appropriate form and implementation of chronic toxicity limits. This has resulted in the petitioning of a NPDES permit in the Los Angeles Region[1] that contained numeric chronic toxicity effluent limitations. To address the petition, the State Water Board adopted WQO 2003-012 directing its staff to revise the toxicity control provisions in the SIP. The State Water Board states the following in WQO 2003-012, "*In reviewing this petition and receiving comments from numerous interested persons on the propriety of including numeric effluent limitations for chronic toxicity in NPDES permits for publicly-owned treatment works that discharge to inland waters, we have determined that this issue should be considered in a regulatory setting, in order to allow for full public discussion and deliberation. We intend to modify the SIP to specifically address the issue. We anticipate that review will occur within the next year. We therefore decline to make a determination here regarding the propriety of the final numeric effluent limitations for chronic toxicity contained in these permits.*" The process to revise the SIP is currently underway. Proposed changes include clarifying the appropriate form of effluent toxicity limits in NPDES permits and general expansion and standardization of toxicity control implementation related to the NPDES permitting process. Since the toxicity control provisions in the SIP are under revision it is infeasible to develop numeric effluent limitations for chronic toxicity. Therefore, this Order requires that the Discharger meet best management

[1] In the Matter of the Review of Own Motion of Waste Discharge Requirements Order Nos. R4-2002-0121 [NPDES No. CA0054011] and R4-2002-0123 [NPDES NO. CA0055119] and Time Schedule Order Nos. R4-2002-0122 and R4-2002-0124 for Los Coyotes and Long Beach Wastewater Reclamation Plants Issued by the California Regional Water Quality Control Board, Los Angeles Region SWRCB/OCC FILES A-1496 AND 1496(a)

practices for compliance with the Basin Plan's narrative toxicity objective, as allowed under 40 CFR 122.44(k).

To ensure compliance with the Basin Plan's narrative toxicity objective, the Discharger is required to conduct chronic WET testing, as specified in the Monitoring and Reporting Program (Attachment E section V.). Furthermore, the Special Provision contained at VI.C.2.a. of this Order requires the Discharger to investigate the causes of, and identify and implement corrective actions to reduce or eliminate effluent toxicity. If the discharge demonstrates toxicity exceeding the numeric toxicity monitoring trigger, the Discharger is required to initiate a Toxicity Reduction Evaluation (TRE) in accordance with an approved TRE workplan. The numeric toxicity monitoring trigger is not an effluent limitation; it is the toxicity threshold at which the Discharger is required to perform accelerated chronic toxicity monitoring, as well as, the threshold to initiate a TRE if effluent toxicity has been demonstrated.

D. Final Effluent Limitation Considerations

1. Mass-based Effluent Limitations

40 CFR 122.45(f)(1) requires effluent limitations be expressed in terms of mass, with some exceptions, and 40 CFR 122.45(f)(2) allows pollutants that are limited in terms of mass to additionally be limited in terms of other units of measurement. This Order includes effluent limitations expressed in terms of mass and concentration. In addition, pursuant to the exceptions to mass limitations provided in 40 CFR 122.45(f)(1), some effluent limitations are not expressed in terms of mass, such as pH and temperature, and when the applicable standards are expressed in terms of concentration (e.g., CTR criteria and MCLs) and mass limitations are not necessary to protect the beneficial uses of the receiving water.

Mass-based effluent limitations have been established in this Order for ammonia, BOD_5, and TSS because they are oxygen demanding substances. Except for the pollutants listed above, mass-based effluent limitations are not included in this Order for pollutant parameters for which effluent limitations are based on water quality objectives and criteria that are concentration-based.

Mass-based effluent limitations were calculated based upon the design flow (average dry weather flow) of 0.62 MGD permitted in section IV.A.1.h of this Order.

2. Averaging Periods for Effluent Limitations

40 CFR 122.45 (d) requires average weekly and average monthly discharge limitations for POTWs unless impracticable. However, for toxic pollutants and pollutant parameters in water quality permitting, USEPA recommends the use of a maximum daily effluent limitation in lieu of average weekly effluent limitations for two reasons. "*First, the basis for the 7-day average for POTWs derives from the secondary treatment requirements. This basis is not related to the need for assuring achievement of water quality standards. Second, a 7-day average, which could comprise up to seven or more daily samples, could average out peak toxic concentrations and therefore the discharge's potential for causing acute toxic effects would be missed.*" (TSD, pg. 96) This Order uses MDELs in lieu of AWELs for ammonia, copper, cyanide, and diazinon and chlorpyrifos as recommended by the TSD for the achievement of water quality standards and for the protection of the beneficial uses of the receiving stream. Furthermore, for BOD_5, pH, and TSS, AWELs have been replaced or supplemented with effluent limitations utilizing

shorter averaging periods. The rationale for using shorter averaging periods for these constituents is discussed in section IV.C.3 of this Fact Sheet.

3. Satisfaction of Anti-Backsliding Requirements

The Clean Water Act specifies that a revised permit may not include effluent limitations that are less stringent than the previous permit unless a less stringent limitation is justified based on exceptions to the anti-backsliding provisions contained in Clean Water Act sections 402(o) or 303(d)(4), or, where applicable, 40 CFR 122.44(l).

The effluent limitations in this Order are at least as stringent as the effluent limitations in the previous Order, with the exception of effluent limitations for bromoform, chlorodibromomethane, dichlorobromomethane, electrical conductivity, nitrate, and chlorine residual. The effluent limitations for these pollutants are less stringent than those in Order R5-2008-0164. This relaxation of effluent limitations is consistent with the anti-backsliding requirements of the CWA and federal regulations.

a. **CWA section 402(o)(1) and 303(d)(4).** CWA section 402(o)(1) prohibits the establishment of less stringent WQBELs "*except in compliance with Section 303(d)(4)*." CWA section 3030(d)(4) has two parts: paragraph (A) which applies to nonattainment waters and paragraph (B) which applies to attainment waters.

i. For waters where standards are not attained, CWA section 304(d)(4)(A) specifies that any effluent limit based on a TMDL or other WLA may be revised only if the cumulative effect of all such revised effluent limits based on such TMDLs or WLAs will assure the attainment of such water quality standards.

Deuel Drain is considered a nonattainment water for electrical conductivity because the receiving water is listed as impaired on the 303(d) list for electrical conductivity. A TMDL and WLA for electrical conductivity has not been adopted. As discussed in section IV.C.3.c.viii of this Fact Sheet, the Bay-Delta Plan objectives for electrical conductivity for the South Delta, on which the effluent limitations in Order R5-2008-0164 were based, have been determined to not be applicable pending reconsideration of the South Delta salinity objectives and adoption of a proper program of implementation that includes municipal dischargers. Therefore, this Order does not retain the effluent limitations for electrical conductivity based on the Bay-Delta Plan objectives. Pending an amendment to the Bay-Delta Plan, this Order requires the Discharger to implement a Salinity Evaluation and Minimization Plan to ensure adequate measures are developed and implemented to reduce the discharge of salinity to Deuel Drain. Therefore, the removal of the WQBELs for electrical conductivity will not result in an increase in salinity concentrations or loading, a decrease in the level of treatment or control, or a reduction of water quality. Thus, removal of the effluent limitations for electrical conductivity from Order R5-2008-0164 meets the exception in CWA section 303(d)(4)(A).

ii. For attainment waters, CWA section 303(d)(4)(B) specifies that a limitation based on a water quality standard may be relaxed where the action is consistent with the antidegradation policy.

Deuel Drain is considered an attainment water for bromoform, chlorodibromomethane, dichlorobromomethane, nitrate, and chlorine residual because the receiving water is not listed as impaired on the 303(d) list for these

constituents[1]. As discussed in section IV.D.4, below, removal of the effluent limits complies with federal and state antidegradation requirements. Thus, removal of the effluent limitations for bromoform, chlorodibromomethane, dichlorobromomethane, nitrate, and chlorine residual from Order R5-2008-0164 meets the exception in CWA section 303(d)(4)(B).

b. **CWA section 402(o)(2).** CWA section 402(o)(2) provides several exceptions to the anti-backsliding regulations. CWA 402(o)(2)(B)(i) allows a renewed, reissued, or modified permit to contain a less stringent effluent limitation for a pollutant if information is available which was not available at the time of permit issuance (other than revised regulations, guidance, or test methods) and which would have justified the application of a less stringent effluent limitation at the time of permit issuance.

As described further in section IV.C.3.a of this Fact Sheet, updated information that was not available at the time Order R5-2008-0164 was issued indicates that bromoform, chlorodibromomethane, dichlorobromomethane, and chlorine residual do not exhibit reasonable potential to cause or contribute to an exceedance of water quality objectives in the receiving water. The updated information that supports the relaxation of effluent limitations for these constituents includes the following:

i. **Bromoform.** Bromoform is a chlorine disinfection byproduct. The Discharger converted from chlorine disinfection to UV disinfection in October 2010. Effluent monitoring data collected between 22 December 2010 and 30 April 2013 and upstream receiving water data collected between 13 December 2008 and 30 April 2013 indicates that bromoform in the discharge does not demonstrate reasonable potential to cause or contribute to an exceedance of the CTR human health criteria.

ii. **Chlorodibromomethane.** Chlorodibromomethane is a chlorine disinfection byproduct. The Discharger converted from chlorine disinfection to UV disinfection in October 2010. Effluent monitoring data collected between 22 December 2010 and 30 April 2013 and upstream receiving water data collected between 13 December 2008 and 30 April 2013 indicates that chlorodibromomethane in the discharge does not demonstrate reasonable potential to cause or contribute to an exceedance of the CTR criteria for the protection of human health.

iii. **Dichlorobromomethane.** Dichlorobromomethane is a chlorine disinfection byproduct. The Discharger converted from chlorine disinfection to UV disinfection in October 2010. Effluent monitoring data collected between 22 December 2010 and 30 April 2013 and upstream receiving water data collected between 13 December 2008 and 30 April 2013 indicates that dichlorobromomethane in the discharge does not demonstrate reasonable potential to cause or contribute to an exceedance of the CTR criteria for the protection of human health.

iv. **Chlorine Residual.** Effluent monitoring data collected between 22 December 2010 and 30 April 2013 indicates that chlorine residual in the discharge does not demonstrate reasonable potential to cause or contribute to an exceedance of the Basin Plan's narrative toxicity objective. Additionally The

[1] "*The exceptions in Section 303(d)(4) address both waters in attainment with water quality standards and those not in attainment, i.e. waters on the section 303(d) impaired waters list*." State Water Board Order WQ 2008-0006, Berry Petroleum Company, Poso Creek/McVan Facility.

Discharger converted from chlorine disinfection to UV disinfection in October 2010 and now only uses chlorine when cleaning the membrane filters.

Thus, removal and relaxation of the effluent limitations for bromoform, chlorodibromomethane, dichlorobromomethane, and chlorine residual from Order R5-2008-0164 is in accordance with CWA section 402(o)(2)(B)(i), which allows for the removal or relaxation of effluent limitations based on information that was not available at the time of permit issuance.

c. **Removal of Discharge Points 003 and 004**. Industrial storm water commingled with groundwater may be discharged to Deuel Drain at Discharge Points 003 and 004. Based on the presence of year-round non-storm water discharges and due to polluted groundwater at the Facility, Order R5-2008-0164 regulated these discharges rather than the State Water Board's General Industrial Storm Water Permit. Although there is no groundwater treatment system, Order R5-2008-0164 included technology-based effluent limitations for volatile organic constituents (VOCs) based on best professional judgment (BPJ).

All industrial connections to the drains for Discharge Point 003 have been removed. However, the storm water collection system for Discharge Point 003 is unlined and groundwater continues to be discharged year-round. The Discharger has indicated that, flooding of basements occurs if the storm water system is not pumped regularly to Deuel Drain. The storm water system that discharges at 003 is not located in the area of the burn pit groundwater plume.

Monitoring data for Discharge Point 003 for the constituents of concern are shown in the table below. Based on the data, although some detections are present, it does not appear that polluted groundwater is accumulating in the storm water system discharged at Discharge Point 003. The maximum effluent concentrations are below background water quality and well below concentrations seen in the burn pit groundwater plume.

Table F-20. Summary of Monitoring Data for Constituents of Concern at Discharge Point 003

Parameter	MEC EFF-003 (µg/L)	# Detected/ Total Samples	Maximum Plume Concentration (µg/L)	Maximum Background Concentration (µg/L)
Tetrachloroethylene	0.5	9/52	47	1.2
Trichloroethylene	0.7	8/52	20	1.4
cis-1,2-Dichloroethylene	0.2 (j-flag)	12/52	90	1.1

A portion of the storm water system that can discharge at Discharge Point 004 is located in the burn pit area. The Discharger has completed lining of the storm water drains to the extent possible, and all industrial connections to the storm water drains have been removed. There are several below ground storm water drains beneath the prison, and most of them have been lined. However, there are parts of the storm water drains that are located in areas of the prison that cannot be accessed due to security concerns (e.g., underneath the prison perimeter). During the term of the Order R5-2008-0164, the Discharger did not discharge from Discharge Point 004 and diverted all flows to a clay-lined storage pond.

Discharges at Discharge Points 003 and 004 are from storm water collection systems. There is no treatment for the storm water or non-storm water discharges. The Discharger has removed all industrial connections to these discharge points, no longer discharges from Discharge Point 004, and based on available effluent data

for Discharge Point 003 there is no reasonable potential for the constituents of concern. Thus, monitoring and effluent limitations for these discharge points have been not been retained in this Order. As discussed further in section II.A, Discharge Points 003 and 004 are now covered under the State Water Board's General Permit for Phase II MS4's.

4. Antidegradation Policies

This Order does not allow for an increase in flow or mass of pollutants to the receiving water. Therefore, a complete antidegradation analysis is not necessary. The Order requires compliance with applicable federal technology-based standards and with WQBELs where the discharge could have the reasonable potential to cause or contribute to an exceedance of water quality standards. The permitted discharge is consistent with the antidegradation provisions of 40 CFR 131.12 and State Water Board Resolution No. 68-16. Compliance with these requirements will result in the use of best practicable treatment or control of the discharge. The impact on existing water quality will be insignificant.

This Order removes existing effluent limitations for constituents in which updated monitoring data demonstrates that the effluent does not cause or contribute to an exceedance of the applicable water quality criteria or objectives in the receiving water (i.e., bromoform, chlorodibromomethane, dichlorobromomethane, and chlorine residual). This Order replaces the effluent limitation for nitrate with an equivalent effluent limitation for nitrate plus nitrite. Although this Order discontinues the effluent limitations for electrical conductivity, this Order requires the Discharger to implement a Salinity Evaluation and Minimization Plan to ensure the Discharger implements measures to reduce the salinity in its discharge. Therefore, the removal of the WQBELs for these constituents will not result in an increase in pollutant concentration or loading, a decrease in the level of treatment or control, or a reduction of water quality. Therefore, the Central Valley Water Board finds that the removal of effluent limitations for bromoform, chlorodibromomethane, dichlorobromomethane, electrical conductivity, nitrate, and chlorine residual does not result in an allowed increase in pollutants or any additional degradation of the receiving water. Thus, the removal of effluent limitations is consistent with the antidegradation provisions of 40 CFR 131.12 and State Water Board Resolution No. 68-16.

5. Stringency of Requirements for Individual Pollutants

This Order contains both technology-based effluent limitations and WQBELs for individual pollutants. The technology-based effluent limitations consist of restrictions on flow, BOD_5, and TSS. Restrictions on these pollutants are discussed in section IV.C of this Fact Sheet. This Order's technology-based pollutant restrictions implement the minimum, applicable federal technology-based requirements. In addition, this Order contains effluent limitations more stringent than the minimum, federal technology-based requirements that are necessary to meet water quality standards. These limitations are not more stringent than required by the CWA.

WQBELs have been derived to implement water quality objectives that protect beneficial uses. Both the beneficial uses and the water quality objectives have been approved pursuant to federal law and are the applicable federal water quality standards. To the extent that toxic pollutant WQBELs were derived from the CTR, the CTR is the applicable standard pursuant to 40 CFR section 131.38. The procedures for calculating the individual WQBELs for priority pollutants are based on the CTR implemented by the SIP, which was approved by U.S. EPA on 18 May 2000. All beneficial uses and water quality objectives contained in the Basin Plan were approved under state law and

submitted to and approved by U.S. EPA prior to 30 May 2000. Any water quality objectives and beneficial uses submitted to U.S. EPA prior to 30 May 2000, but not approved by U.S. EPA before that date, are nonetheless "applicable water quality standards for purposes of the CWA" pursuant to 40 CFR section 131.21(c)(1). Collectively, this Order's restrictions on individual pollutants are no more stringent than required to implement the requirements of the CWA.

Summary of Final Effluent Limitations
Discharge Point 001

Table F-21. Summary of Final Effluent Limitations

Parameter	Units	Effluent Limitations					Basis[1]
		Average Monthly	Average Weekly	Maximum Daily	Instantaneous Minimum	Instantaneous Maximum	
Average Dry Weather Flow	MGD	0.62	--	--	--	--	DC
Conventional Pollutants							
Biochemical Oxygen Demand (5-day @ 20ºC)	mg/L	10	15	20	--	--	TTC, CFR
	lbs/day[2]	52	78	103	--	--	
	% Removal	85	--	--	--	--	
pH	standard units	--	--	--	6.5	8.5	BP
Total Suspended Solids	mg/L	10	15	20	--	--	TTC, CFR
	lbs/day[2]	52	78	103	--	--	
	% Removal	85	--	--	--	--	
Priority Pollutants							
Copper, Total Recoverable	µg/L	25	--	10	--	--	CTR, BP
Cyanide, Total (as CN)	µg/L	4.3	--	8.5	--	--	CTR
Non-Conventional Pollutants							
Ammonia Nitrogen, Total (as N)	mg/L	0.7	--	2.2	--	--	NAWQC
	lbs/day[2]	3.6	--	11.4	--	--	
Diazinon and Chlorpyrifos	µg/L	[3]	--	[4]	--	--	TMDL
Methylmercury	gram/year	0.021[5]	--	--	--	--	TMDL
Nitrite Nitrogen, Total (as N)	mg/L	1.0	--	--	--	--	MCL
Nitrate plus Nitrite (as N)	mg/L	10	--	--	--	--	MCL
Temperature	ºF	--	--	--	--	20[6]	TP
Total Coliform Organisms	MPN/100 mL	--	2.2[7]	23[8]	--	240	Title 22
Acute Toxicity	% Survival	--	--	70[9]/90[10]	--	--	BP
Chronic Toxicity	TUc	--	--	[11]	--	--	BP

Parameter	Units	Effluent Limitations					Basis[1]
		Average Monthly	Average Weekly	Maximum Daily	Instantaneous Minimum	Instantaneous Maximum	

[1] DC – Based on the design capacity of the Facility.
TTC - Based on tertiary treatment capability. These effluent limitations reflect the capability of a properly operated tertiary treatment plant.
CFR – Based on secondary treatment standards contained in 40 CFR Part 133.
BP – Based on water quality objectives contained in the Basin Plan.
CTR – Based on water quality criteria contained in the California Toxics Rule and applied as specified in the SIP.
NAWQC – Based on USEPA's National Ambient Water Quality Criteria for the protection of freshwater aquatic life.
TMDL – Based on the applicable TMDL.
MCL – Based on the Primary Maximum Contaminant Level.
TP – Based on the Thermal Plan.
Title 22 – Based on CA Department of Public Health Reclamation Criteria, CCR, Division 4, Chapter 3 (Title 22).

[2] Based on a design average dry weather flow of 0.62 MGD.

[3] Average Monthly Effluent Limitation

$$S_{avg} = \frac{C_{D_avg}}{0.079} + \frac{C_{C_avg}}{0.012} \leq 1.0$$

$C_{D\ avg}$ = average monthly diazinon effluent concentration in µg/L
$C_{C\ avg}$ = average monthly chlorpyrifos effluent concentration in µg/L

[4] Maximum Daily Effluent Limitation

$$S_{max} = \frac{C_{D_max}}{0.16} + \frac{C_{C_max}}{0.025} \leq 1.0$$

$C_{D\ avg}$ = maximum daily diazinon effluent concentration in µg/L
$C_{C\ avg}$ = maximum daily chlorpyrifos effluent concentration in µg/L

[5] The total calendar annual load of methylmercury shall not exceed 0.021 grams.

[6] The maximum temperature of the discharge shall not exceed the natural receiving water temperature by more than 20ºF.

[7] Applied as a 7-day median effluent limitation.

[8] Not to be exceeded more than once in any 30-day period.

[9] 70% minimum of any one bioassay.

[10] 90% median for any three consecutive bioassays.

[11] There shall be no chronic toxicity in the effluent discharge.

E. Interim Effluent Limitations

1. **Compliance Schedule for Methylmercury**. This Order contains a new final effluent limitation for methylmercury based on the new objective that became effective on 20 October 2011. The Discharger has complied with the application requirements in paragraph 4 of the State Water Board's Compliance Schedule Policy, and the Discharger's application demonstrates the need for additional time to implement actions to comply with the new limitations, as described below. Therefore, a compliance schedule for compliance with the effluent limitations for methylmercury is established in this Order.

   A compliance schedule is necessary because the Discharger must implement actions, including a Phase 1 Methylmercury Control Study and possible upgrades to the facility to comply with final effluent limitations.

   The Discharger has made diligent efforts to quantify pollutant levels in the discharge and the sources of the pollutant in the waste stream, and the results of those efforts.

The compliance schedule is as short as possible. The Central Valley Water Board will use the Phase 1 Control Studies' results and other information to consider amendments to the Delta Mercury Control Program during the Phase 1 Delta Mercury Control Program Review. Therefore, at this time it is uncertain what measures must be taken to consistently comply with the waste load allocation for methylmercury. The interim effluent limits and final compliance date may be modified at the completion of Phase 1.

Interim performance-based limitations have been established in this Order in accordance with the Delta Mercury Control Program. The interim limitations were determined as described in section IV.E.2., below, and are in effect through until the final limitations take effect.

2. **Interim Limits for Total Mercury.** During Phase 1, the Delta Mercury Control Program requires POTWs to limit their discharges of inorganic (total) mercury to facility performance-based levels. The interim inorganic (total) mercury effluent mass limit is to be derived using current, representative data and shall not exceed the 99.9th percentile of 12-month running effluent inorganic (total) mercury loads (lbs/year). At the end of Phase 1, the interim inorganic (total) mercury mass limit will be re-evaluated and modified as appropriate.

   The interim limitations for total mercury in this Order are based on the current treatment plant performance. With 10 or more sampling data points, sampling and laboratory variability is accounted for by establishing interim limits that are based on normally distributed data where 99.9% of the data points will lie within 3.34 standard deviations of the mean (Basic Statistical Methods for Engineers and Scientists, Kennedy and Neville, Harper and Row). Therefore, interim limitations are based on the mean plus 3.3 standard deviations.

   The Central Valley Water Board finds that the Discharger can undertake source control and treatment plant measures to maintain compliance with the interim limitations included in this Order. Interim limitations are established when compliance with final effluent limitations cannot be achieved by the existing discharge. Discharge of constituents in concentrations in excess of the final effluent limitations, but in compliance with the interim effluent limitations, can significantly degrade water quality and adversely affect the beneficial uses of the receiving stream on a long-term basis. The interim limitations, however, establish an enforceable ceiling concentration until compliance with the effluent limitation can be achieved.

Table F-22. Interim Mercury Effluent Limitation Calculation Summary

Parameter	Units	Maximum Annual Effluent Loading	Number of Running Annual Load Calcs	Interim Limitation
Mercury, Total Recoverable	g/yr	7.08	17	10.6

F. Land Discharge Specifications – Not Applicable

G. Recycling Specifications – Not Applicable

V. RATIONALE FOR RECEIVING WATER LIMITATIONS

A. Surface Water

1. CWA section 303(a-c), requires states to adopt water quality standards, including criteria where they are necessary to protect beneficial uses. The Central Valley Water Board adopted water quality criteria as water quality objectives in the Basin Plan. The Basin Plan states that "[t]*he numerical and narrative water quality objectives define the least*

stringent standards that the Regional Water Board will apply to regional waters in order to protect the beneficial uses." The Basin Plan includes numeric and narrative water quality objectives for various beneficial uses and water bodies. This Order contains receiving surface water limitations based on the Basin Plan numerical and narrative water quality objectives for bacteria, biostimulatory substances, color, chemical constituents, dissolved oxygen, floating material, oil and grease, pH, pesticides, radioactivity, suspended sediment, settleable substances, suspended material, tastes and odors, temperature, toxicity, and turbidity.

a. **pH**. Order R5-2008-0164 established a receiving water limitation for pH specifying that discharges from the Facility shall not cause the ambient pH to change by more than 0.5 units based on the water quality objective for pH in the Basin Plan. The Central Valley Water Board adopted Resolution R5-2007-0136 on 25 October 2007, amending the Basin Plan to delete the portion of the pH water quality objective that limits the change in pH to 0.5 units and the allowance of averaging periods for pH. The Basin Plan amendment has been approved by the State Water Board, the Office of Administrative Law, and USEPA. Consistent with the revised water quality objective in the Basin Plan, this Order does not require a receiving water limitation for pH change.

   In Finding No. 14 of Resolution R5-2007-0136 the Central Valley Water Board found that the change in the pH receiving water objective is consistent with the State Water Board Resolution No. 68-16, in that the changes to water quality objectives (i) consider maximum benefit to the people of the State, (ii) will not unreasonably affect present and anticipated beneficial use of waters, and (iii) will not result in water quality less than that prescribed in policies, and is consistent with the federal Antidegradation Policy (40 CFR 131.12).

   Ammonia is the only constituent in the discharge regulated by this Order directly related to pH. The fixed ammonia effluent limitations in this Order are based on reasonable worse-case conditions. Although ammonia criteria are based on pH, and the pH receiving water limitations are more lenient in this Order than in the previous permit, the fixed ammonia limits are developed to protect under worse-case pH conditions. Therefore the relaxation of the pH receiving water limitation will protect aquatic life and other beneficial uses and will not unreasonably affect present and anticipated beneficial uses nor result in water quality less than described in applicable policies. The relaxation of the receiving water limitation is not expected to cause other impacts on water quality. The Central Valley Water Board finds that the relaxation of the pH receiving water limitation (i) is to the maximum benefit to the people of the State, (ii) will not unreasonably affect present and anticipated beneficial use of waters, and (iii) will not result in water quality less than that prescribed in policies, and is consistent with the federal Antidegradation Policy (40 CFR 131.12).

   The revised receiving water limitation for pH, which is based on the amendment to the Basin Plan's pH water quality objective, reflects current scientifically supported pH requirements for the protection of aquatic life and other beneficial uses. The revised receiving water limitation for pH is more consistent with the current USEPA recommended criteria and is fully protective of aquatic life and the other beneficial uses listed in the Basin Plan. Changes in pH when pH is maintained within the range of 6.5 to 8.5 are neither beneficial nor adverse and, therefore, are not considered to be degradation in water quality. Attempting to restrict pH changes to 0.5 pH units would incur substantial costs without demonstrable benefits to beneficial uses. Thus, any changes in pH that would occur under the revised pH

limitation would not only be protective of beneficial uses, but also would be consistent with maximum benefit to people of the State. Therefore the proposed amendment will not violate antidegradation policies.

b. **Temperature**. The Thermal Plan is applicable to the discharge from the Facility. For the purposes of the Thermal Plan, the discharge is considered to be an *Existing Discharge* of *Elevated Temperature Waste* to an *Estuary*, as defined in the Thermal Plan. Therefore, the Discharger must meet the water quality objective at Section 5.A(1) of the Thermal Plan, which requires compliance with the following:

i. The maximum temperature shall not exceed the natural receiving water temperature by more than 20°F.

ii. Elevated temperature waste discharges either individually or combined with other discharges shall not create a zone, defined by water temperatures of more than 1°F above natural receiving water temperature, which exceeds 25 percent of the cross-sectional area of a main river channel at any point.

iii. No discharge shall cause a surface water temperature rise greater than 4°F above the natural temperature of the receiving waters at any time or place.

iv. Additional limitations shall be imposed when necessary to assure protection of beneficial uses.

This Order contains receiving water limitations for temperature based on the Thermal Plan.

c. **Turbidity**. Order R5-2008-0164 established a receiving water limitation for turbidity specifying that discharges from the Facility shall not cause the turbidity to increase more than 1 NTU where natural turbidity is between 0 and 5 NTU based on the water quality objective for turbidity in the Basin Plan. The Central Valley Water Board adopted Resolution R5-2007-0136 on 25 October 2007, amending the Basin Plan to limit turbidity to 2 NTU when the natural turbidity is less than 1 NTU. The Basin Plan amendment has been approved by the State Water Board, the Office of Administrative Law, and USEPA. Consistent with the revised water quality objective in the Basin Plan, this Order limits turbidity to 2 NTU when the natural turbidity is less than 1 NTU.

In Finding No. 14 of Resolution R5-2007-0136 the Central Valley Water Board found that the change in the turbidity receiving water objective is consistent with the State Water Board Resolution No. 68-16, in that the changes to water quality objectives (i) consider maximum benefit to the people of the State, (ii) will not unreasonably affect present and anticipated beneficial use of waters, and (iii) will not result in water quality less than that prescribed in policies, and is consistent with the federal Antidegradation Policy (40 CFR 131.12).

This Order includes operational specifications that require the Discharger to operate the treatment system to insure that turbidity shall not exceed 0.2 NTU more than 5 percent of the time within a 24 hour period and 0.5 NTU at any time. Because this Order limits the discharge of turbidity to 0.2 NTU, the Order will be protective of the receiving water under all natural background conditions as defined in the Basin Plan's revised water quality objective for turbidity. The relaxation of the turbidity receiving water limitation will protect aquatic life and other beneficial uses and will not unreasonably affect present and anticipated beneficial uses nor result in water quality less than described in applicable policies. The relaxation of the receiving water limitation is not expected to cause other impacts on water quality. The Central

Valley Water Board finds that (i) the relaxation of the turbidity receiving water limitation is to the maximum benefit to the people of the State, (ii) will not unreasonably affect present and anticipated beneficial use of waters, and (iii) will not result in water quality less than that prescribed in policies, and is consistent with the federal Antidegradation Policy (40 CFR 131.12).

The revised receiving water limitation for turbidity, which is based on the amendment to the Basin Plan's turbidity water quality objective, reflects current scientifically supported turbidity requirements for the protection of aquatic life and other beneficial uses and, therefore, will be fully protective of aquatic life and the other beneficial uses listed in the Basin Plan. Changes in turbidity allowed by the revised receiving water limitation, when ambient turbidity is below 1 NTU, would not adversely affect beneficial uses and would maintain water quality at a level higher than necessary to protect beneficial uses. Restricting low-level turbidity changes further may require costly upgrades, which would not provide any additional protection of beneficial uses. Thus, any changes in turbidity that would occur under the amended turbidity receiving water limitation would not only be protective of beneficial uses, but also would be consistent with maximum benefit to people of the State. Therefore, the relaxed receiving water limitations for turbidity will not violate antidegradation policies.

B. Groundwater

1. The beneficial uses of the underlying groundwater are municipal and domestic supply, industrial service supply, industrial process supply, and agricultural supply.
2. Basin Plan water quality objectives include narrative objectives for chemical constituents, tastes and odors, and toxicity of groundwater. The toxicity objective requires that groundwater be maintained free of toxic substances in concentrations that produce detrimental physiological responses in humans, plants, animals, or aquatic life. The chemical constituent objective states groundwater shall not contain chemical constituents in concentrations that adversely affect any beneficial use. The tastes and odors objective prohibits taste- or odor-producing substances in concentrations that cause nuisance or adversely affect beneficial uses. The Basin Plan also establishes numerical water quality objectives for chemical constituents and radioactivity in groundwaters designated as municipal supply. These include, at a minimum, compliance with MCLs in Title 22 of the CCR. The bacteria objective prohibits coliform organisms at or above 2.2 MPN/100 mL. The Basin Plan requires the application of the most stringent objective necessary to ensure that waters do not contain chemical constituents, toxic substances, radionuclides, taste- or odor-producing substances, or bacteria in concentrations that adversely affect municipal or domestic supply, agricultural supply, industrial supply or some other beneficial use.
3. Order R5-2003-0065 contained groundwater limitations due to the potential for percolation of wastewater from the unlined aerated lagoon and two unlined facultative/holding ponds. Although monitoring during 2005 by the Discharger indicated no impact from the unlined lagoon and ponds, these units are still in use and therefore the groundwater limitations are being retained from Order R5-2003-0065 to protect the beneficial uses of the underlying groundwater.

VI. RATIONALE FOR PROVISIONS

A. Standard Provisions

Standard Provisions, which apply to all NPDES permits in accordance with 40 CFR section 122.41, and additional conditions applicable to specified categories of permits in accordance

with 40 CFR section 122.42, are provided in Attachment D. The Discharger must comply with all standard provisions and with those additional conditions that are applicable under section 122.42.

Sections 122.41(a)(1) and (b) through (n) of 40 CFR establish conditions that apply to all state-issued NPDES permits. These conditions must be incorporated into the permits either expressly or by reference. If incorporated by reference, a specific citation to the regulations must be included in the Order. Section 123.25(a)(12) of 40 CFR allows the state to omit or modify conditions to impose more stringent requirements. In accordance with 40 CFR section 123.25, this Order omits federal conditions that address enforcement authority specified in 40 CFR sections 122.41(j)(5) and (k)(2) because the enforcement authority under the Water Code is more stringent. In lieu of these conditions, this Order incorporates by reference Water Code section 13387(e).

B. Special Provisions

1. Reopener Provisions

a. **Mercury.** The Delta Mercury Control Program was designed to proceed in two phases. Phase 1 spans a period of approximately 9 years. Phase 1 emphasizes studies and pilot projects to develop and evaluate management practices to control methylmercury. At the end of Phase 1, the Central Valley Water Board will conduct a Phase 1 Delta Mercury Control Program Review that considers: modification of methylmercury goals, objectives, allocations and/or the Final Compliance Date; implementation of management practices and schedules for methylmercury controls; and adoption of a mercury offset program for dischargers who cannot meet their load and waste load allocations after implementing all reasonable load reduction strategies. The fish tissue objectives, the linkage analysis between objectives and sources, and the attainability of the allocations will be re-evaluated based on the findings of Phase 1 control studies and other information. The linkage analysis, fish tissue objectives, allocations, and time schedules may be adjusted at the end of Phase 1, or subsequent program reviews, as appropriate. Therefore, this Order may be reopened to address changes to the Delta Mercury Control Program.

b. **Bay-Delta Plan South Salinity Objectives Update.** The State Water Board is currently in the process of updating the South Delta Salinity Objectives contained in the Bay-Delta Plan. The updated salinity objectives may result in needed changes to the salinity requirements in this Order. Therefore, this Order may be reopened to modify salinity requirements, as appropriate, in accordance with changes to the Bay-Delta Plan.

c. **Pollution Prevention.** This Order requires the Discharger prepare a pollution prevention plan following Water Code section 13263.3(d)(3) for mercury. This reopener provision allows the Central Valley Water Board to reopen this Order for addition and/or modification of effluent limitations and requirements for mercury based on a review of the pollution prevention plan.

d. **Whole Effluent Toxicity.** This Order requires the Discharger to investigate the causes of, and identify corrective actions to reduce or eliminate effluent toxicity through a TRE. This Order may be reopened to include a numeric chronic toxicity limitation, a new acute toxicity limitation, and/or a limitation for a specific toxicant identified in the TRE. Additionally, if a numeric chronic toxicity water quality objective is adopted by the State Water Board, this Order may be reopened to include a numeric chronic toxicity limitation based on that objective.

e. **Water Effects Ratio (WER) and Metal Translators.** A default WER of 1.0 has been used in this Order for calculating criteria for applicable inorganic constituents. In addition, default dissolved-to-total metal translators have been used to convert water quality objectives from dissolved to total recoverable when developing effluent limitations for copper. If the Discharger performs studies to determine site-specific WERs and/or site-specific dissolved-to-total metal translators, this Order may be reopened to modify the effluent limitations for the applicable inorganic constituents.

f. **Drinking Water Policy.** On 26 July 2013 the Central Valley Water Board adopted Resolution No. R5-2013-0098 amending the Basin Plan and establishing a Drinking Water Policy. The State Water Board will consider adoption of the Drinking Water Policy at a future meeting. This Order may be reopened to incorporate monitoring of drinking water constituents to implement the Drinking Water Policy.

g. **Ultraviolet Light (UV) Disinfection Operating Specifications.** UV System operating specifications are required to ensure that the UV system is operated to achieve the required pathogen removal. UV disinfection system specifications and monitoring and reporting requirements are required to ensure that adequate UV dosage is applied to the wastewater to inactivate pathogens (e.g., viruses) in the wastewater. UV dosage is dependent on several factors such as UV transmittance, UV power setting, wastewater turbidity, and wastewater flow through the UV disinfection system. The UV specifications in this Order are based on the NWRI guidelines. If the Discharger conducts a site-specific UV Engineering Study that identifies site-specific UV operating specifications that will achieve the virus inactivation required by Title 22 for disinfected tertiary recycled water, this Order may be reopened to modify the UV specifications.

h. **Diazinon and Chlorpyrifos Basin Plan Amendment.** Central Valley Water Board staff is developing a Basin Plan Amendment to provide a chlorpyrifos and diazinon effluent limitation exemption if a discharger can demonstrate that diazinon and chlorpyrifos have not been detected in the effluent. The proposed Basin Plan Amendment may result in needed changes to the diazinon and chlorpyrifos requirements in this Order. As discussed in the RPA for diazinon and chlorpyrifos, there have been no detectable results for these constituents. Therefore, this Order may be reopened to modify diazinon and chlorpyrifos effluent limitations, as appropriate, in accordance with an amendment to the Basin Plan.

2. Special Studies and Additional Monitoring Requirements

a. **Chronic Whole Effluent Toxicity Requirements.** The Basin Plan contains a narrative toxicity objective that states, "*All waters shall be maintained free of toxic substances in concentrations that produce detrimental physiological responses in human, plant, animal, or aquatic life.*" (Basin Plan at page III-8.00). Based on whole effluent chronic toxicity testing performed by the Discharger from 22 December 2010 through 30 April 2013, the discharge has reasonable potential to cause or contribute to an in-stream excursion above of the Basin Plan's narrative toxicity objective.

This provision requires the Discharger to develop a TRE Workplan in accordance with USEPA guidance. In addition, the provision provides a numeric toxicity monitoring trigger and requirements for accelerated monitoring, as well as, requirements for TRE initiation if toxicity has been demonstrated.

Monitoring Trigger. A numeric toxicity monitoring trigger of > 1 TUc (where TUc = 100/NOEC) is applied in the provision, because this Order does not allow any

dilution for the chronic condition. Therefore, a TRE is triggered when the effluent exhibits toxicity at 100% effluent.

Accelerated Monitoring. The provision requires accelerated WET testing when a regular WET test result exceeds the monitoring trigger. The purpose of accelerated monitoring is to determine, in an expedient manner, whether there is toxicity before requiring the implementation of a TRE. Due to possible seasonality of the toxicity, the accelerated monitoring should be performed in a timely manner, preferably taking no more than 2 to 3 months to complete.

The provision requires accelerated monitoring consisting of four chronic toxicity tests in a six-week period (i.e., one test every two weeks) using the species that exhibited toxicity. Guidance regarding accelerated monitoring and TRE initiation is provided in the *Technical Support Document for Water Quality-based Toxics Control,* EPA/505/2-90-001, March 1991 (TSD). The TSD at page 118 states, "*EPA recommends if toxicity is repeatedly or periodically present at levels above effluent limits more than 20 percent of the time, a TRE should be required.*" Therefore, four accelerated monitoring tests are required in this provision. If no toxicity is demonstrated in the four accelerated tests, then it demonstrates that toxicity is not present at levels above the monitoring trigger more than 20 percent of the time (only 1 of 5 tests are toxic, including the initial test). However, notwithstanding the accelerated monitoring results, if there is adequate evidence of effluent toxicity (i.e., toxicity present exceeding the monitoring trigger more than 20 percent of the time), the Executive Officer may require that the Discharger initiate a TRE.

See the WET Accelerated Monitoring Flow Chart (Figure F-1), below, for further clarification of the accelerated monitoring requirements and for the decision points for determining the need for TRE initiation.

TRE Guidance. The Discharger is required to prepare a TRE Workplan in accordance with USEPA guidance. Numerous guidance documents are available, as identified below:

- T*oxicity Reduction Evaluation Guidance for Municipal Wastewater Treatment Plants*, EPA/833-B-99/002, August 1999.
- *Generalized Methodology for Conducting Industrial Toxicity Reduction Evaluations* (TREs), EPA/600/2-88/070, April 1989.
- *Methods for Aquatic Toxicity Identification Evaluations: Phase I Toxicity Characterization Procedures, Second Edition*, EPA 600/6-91/003, February 1991.
- *Toxicity Identification Evaluation: Characterization of Chronically Toxic Effluents, Phase I*, EPA/600/6-91/005F, May 1992.
- *Methods for Aquatic Toxicity Identification Evaluations: Phase II Toxicity Identification Procedures for Samples Exhibiting Acute and Chronic Toxicity, Second Edition*, EPA/600/R-92/080, September 1993.
- *Methods for Aquatic Toxicity Identification Evaluations: Phase III Toxicity Confirmation Procedures for Samples Exhibiting Acute and Chronic Toxicity, Second Edition*, EPA 600/R-92/081, September 1993.

- *Methods for Measuring the Acute Toxicity of Effluents and Receiving Waters to Freshwater and Marine Organisms, Fifth Edition*, EPA-821-R-02-012, October 2002.

- *Short-term Methods for Estimating the Chronic Toxicity of Effluents and Receiving Waters to Freshwater Organisms, Fourth Edition*, EPA-821-R-02-013, October 2002.

- *Technical Support Document for Water Quality-based Toxics Control*, EPA/505/2-90-001, March 1991.

Figure F-1
WET Accelerated Monitoring Flow Chart

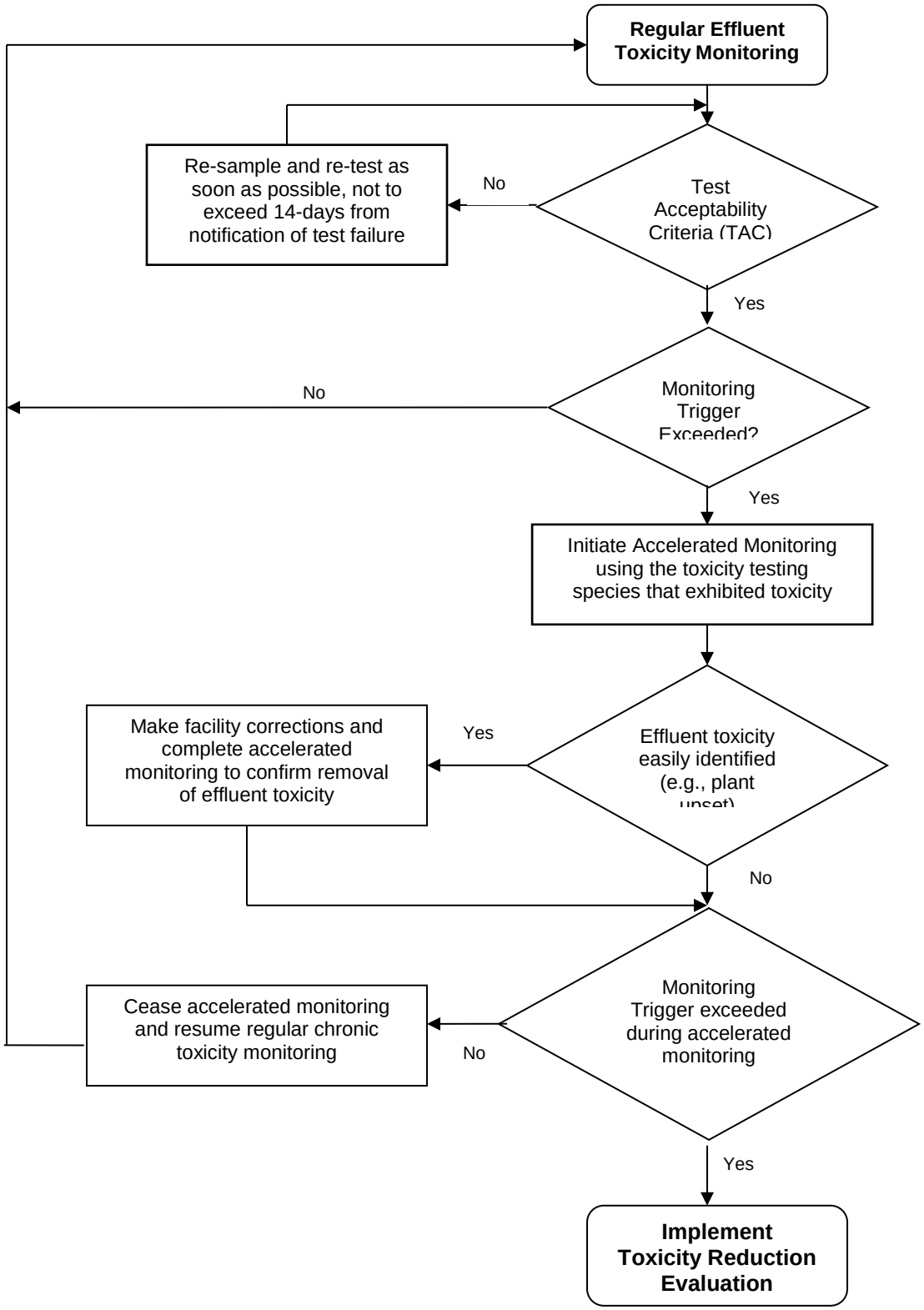

b. **Phase 1 Methylmercury Control Study.** The Basin Plan's Delta Mercury Control Program requires NPDES dischargers, working with other stakeholders, to conduct methylmercury control studies (Control Studies) to evaluate existing control methods and, as needed, develop additional control methods that could be implemented to achieve their methylmercury load and waste load allocations. Control Studies can be developed through a stakeholder group approach or other collaborative mechanism, or by individual dischargers. The Discharger chose to not participate in the Central Valley Clean Water Association (CVCWA) Coordinated Methylmercury Control Study (Study).

The Central Valley Water Board will use the Phase 1 Control Studies' results and other information to consider amendments to the Delta Mercury Control Program during the Phase 1 Delta Mercury Control Program Review. The objective of the Control Studies is to evaluate existing control methods and, as needed, develop additional control methods that could be implemented to achieve the methylmercury load and waste load allocation. In accordance with the Delta Mercury Control Plan, a work plan was submitted by the Discharge in June 2012. The Central Valley Water Board commits to supporting an Adaptive Management approach. The adaptive management approach includes the formation of a Stakeholder Group(s) and a Technical Advisory Committee (TAC).

The study work plan will be reviewed and approval by the TAC and subsequently approved by the Executive Officer. The Discharge shall immediately implement the work plan upon Executive Officer approval, and a progress report shall be submitted by **20 October 2015.**

The Study shall evaluate the feasibility of reducing sources more than the minimum amount needed to achieve the methylmercury allocation. The Study also may include an evaluation of innovative actions, watershed approaches, offsets projects, and other short and long-term actions that result in reducing inorganic (total) mercury and methylmercury to address the accumulation of methylmercury in fish tissue and to reduce methylmercury exposure. The Study may evaluate the effectiveness of using inorganic (total) mercury controls to control methylmercury discharges.

The Study shall include a description of methylmercury and/or inorganic (total) mercury management practices identified in Phase 1; an evaluation of the effectiveness, and costs, potential environmental effects, and overall feasibility of the control actions. The Study shall also include proposed implementation plans and schedules to comply with methylmercury allocations as soon as possible. The Study shall be submitted by **20 October 2018.**

The Executive Officer may authorize extending the Study due date. The Executive Officer may, after public notice, extend the due date up to two years if the Discharger demonstrates it is making significant progress towards developing, implementing and/or completing the Study and reasonable attempts have been made to secure funding for the Study, but the Discharger has experienced severe budget shortfalls.

3. Best Management Practices and Pollution Prevention

a. **Pollution Prevention Plan for Mercury**. The Basin Plan's Delta Mercury Control Plan requires NPDES permitted facilities to submit and implement pollutant minimization programs for mercury. The Discharger submitted a PPP dated 20 April 2012. The PPP shall continue to be implemented and annual progress reports shall

discuss the effectiveness of the PPP in the reduction of mercury in the discharge, include a summary of mercury and methylmercury monitoring results, and discuss updates to the PPP. The minimum requirements for the PPP include the following:

i. An estimate of all of the sources of a pollutant contributing, or potentially contributing, to the loadings of a pollutant in the treatment plant influent.

ii. An analysis of the methods that could be used to prevent the discharge of the pollutants into the Facility, including application of local limits to industrial or commercial dischargers regarding pollution prevention techniques, public education and outreach, or other innovative and alternative approaches to reduce discharges of the pollutant to the Facility. The analysis also shall identify sources, or potential sources, not within the ability or authority of the Discharger to control, such as pollutants in the potable water supply, airborne pollutants, pharmaceuticals, or pesticides, and estimate the magnitude of those sources, to the extent feasible.

iii. An estimate of load reductions that may be attained through the methods identified in subparagraph ii.

iv. A plan for monitoring the results of the pollution prevention program.

v. A description of the tasks, cost, and time required to investigate and implement various elements in the pollution prevention plan.

vi. A statement of the Discharger's pollution prevention goals and strategies, including priorities for short-term and long-term action, and a description of the Discharger's intended pollution prevention activities for the immediate future.

vii. A description of the Discharger's existing pollution prevention programs.

viii. An analysis, to the extent feasible, of any adverse environmental impacts, including cross-media impacts or substitute chemicals that may result from the implementation of the pollution prevention program.

ix. An analysis, to the extent feasible, of the costs and benefits that may be incurred to implement the pollution prevention program.

b. **Mercury Exposure Reduction Program.** The Basin Plan's Delta Mercury Control Program requires dischargers to participate in a Mercury Exposure Reduction Program. The Exposure Reduction Program is needed to address public health impacts of mercury in Delta fish, including activities that reduce actual and potential exposure of and mitigate health impacts to those people and communities most likely to be affected by mercury in Delta caught fish, such as subsistence fishers and their families.

The Exposure Reduction Program must include elements directed toward:

i. Developing and implementing community-driven activities to reduce mercury exposure;

ii. Raising awareness of fish contamination issues among people and communities most likely affected by mercury in Delta-caught fish such as subsistence fishers and their families;

iii. Integrating community-based organizations that serve Delta fish consumers, Delta fish consumers, tribes, and public health agencies in the design and implementation of an exposure reduction program;

iv. Identifying resources, as needed, for community-based organizations and tribes to participate in the Program;

v. Utilizing and expanding upon existing programs and materials or activities in place to reduce mercury, and as needed, create new materials or activities; and

vi. Developing measures for program effectiveness.

This Order requires the Discharger participate in a Mercury Exposure Reduction Program (MERP) in accordance with the Delta Mercury Control Program. By letter dated 13 May 2013, the Discharger elected to provide financial support in the collective MERP with other Delta dischargers, rather than be individually responsible for any MERP activities. The objective of the Exposure Reduction Program is to reduce mercury exposure of Delta fish consumers most likely affected by mercury. The work plan shall address the Exposure Reduction Program objective, elements, and the Discharger's coordination with other stakeholders. The Discharger shall integrate or, at minimum, provide good-faith opportunities for integration of community-based organizations, tribes, and consumers of Delta fish into planning, decision making, and implementation of exposure reduction activities. The Discharger shall continue to participate in the group effort to implement the work plan.

c. **Salinity Evaluation and Minimization Plan.** An Evaluation and Minimization Plan for salinity is required in this Order to ensure adequate measures are developed and implemented by the Discharger to reduce the discharge of salinity to Deuel Drain.

4. Construction, Operation, and Maintenance Specifications

a. **Filtration System Operating Specifications**. Turbidity is included as an operational specification as an indicator of the effectiveness of the filtration system for providing adequate disinfection. The tertiary treatment process utilized at this Facility is capable of reliably meeting a turbidity limitation of 0.2 nephelometric turbidity units (NTU) as a daily average. Failure of the treatment system such that virus removal is impaired would normally result in increased particles in the effluent, which result in higher effluent turbidity and could impact UV dosage. Turbidity has a major advantage for monitoring filter performance, allowing immediate detection of filter failure and rapid corrective action. The operational specification requires that turbidity prior to disinfection shall not exceed 0.2 NTU more than 5 percent of the time and a daily maximum of 0.5 NTU.

b. **UV Disinfection System Operating Specifications.** This Order requires that wastewater shall be oxidized, coagulated, filtered, and adequately disinfected pursuant to DPH reclamation criteria, CCR, Title 22, division 4, chapter 3, (Title 22), or equivalent. To ensure that the UV disinfection system is operated to achieve the required pathogen removal, this Order includes effluent limits for total coliform organisms, filtration system operating specifications, and UV disinfection system operating specifications. Compliance with total coliform effluent limits alone does not ensure that pathogens in the municipal wastewater have been deactivated by the UV disinfection system. Compliance with the effluent limits and the filtration system and UV disinfection operating specifications demonstrates compliance with the equivalency to Title 22 disinfection requirement.

The National Water Research Institute (NWRI) and American Water Works Association Research Foundation NWRI/AWWRF's *Ultraviolet Disinfection*

Guidelines for Drinking Water and Water Reuse" first published in December 2000 and revised as a Third Edition dated August 2012 (NWRI guidelines) includes UV operating specifications for compliance with Title 22. For water recycling in accordance with Title 22, the UV system shall be an approved system included in the Treatment Technology Report for Recycled Water, December 2009 (or a later version, as applicable) published by the DPH. The UV system shall also conform to all requirements and operating specifications of the NWRI guidelines. A Memorandum dated 1 November 2004 issued by DPH to Regional Water Board executive offices recommended that provisions be included in permits for water recycling treatment plants employing UV disinfection requiring Dischargers to establish fixed cleaning frequency of lamp sleeves, as well as, include provisions that specify minimum delivered UV dose that must be maintained (per the NWRI Guidelines) disinfection system specifications and monitoring and reporting requirements are required to ensure that adequate UV dosage is applied to the wastewater to inactivate pathogens (e.g., viruses) in the wastewater. UV dosage is dependent on several factors such as UV transmittance, UV power setting, wastewater turbidity, and wastewater flow through the UV disinfection system. Monitoring and reporting of these parameters is necessary to determine compliance with minimum dosage requirements established by the DPH and the NWRI and AWWARF's "Ultraviolet Disinfection Guidelines for Drinking Water and Water Reuse" first published in December 2000 revised as a Third Edition dated August 2012. In addition, a memorandum dated 1 November 2004 issued by DPH to Regional Water Board executive officers recommended that provisions be included in permits to water recycling treatment plants employing UV disinfection requiring dischargers to establish fixed cleaning frequency of quartz sleeves as well as include provisions that specify minimum delivered UV dose that must be maintained (as recommended by the NWRI/AWWARF UV Disinfection Guidelines).

For membrane filtration, the NWRI guidelines recommend a minimum hourly average UV dose of 80 mJ/cm^2. Therefore, this Order includes UV operating specifications requiring a minimum hourly average UV dose of 80 mJ/cm^2 and a minimum hourly average UV transmittance of 65%, per the NWRI Guidelines. If the Discharger conducts a site-specific UV engineering study that demonstrates a lower UV dose meets a Title 22 equivalent virus removal, this Order may be reopened to revise the UV operating specifications accordingly.

5. Special Provisions for Municipal Facilities (POTWs Only)

a. The State Water Board issued General Waste Discharge Requirements for Sanitary Sewer Systems, Water Quality Order 2006-0003-DWQ (General Order) on 2 May 2006. The Monitoring and Reporting Requirements for the General Order were amended by Water Quality Order WQ 2008-0002-EXEC on 20 February 2008. The General Order requires public agencies that own or operate sanitary sewer systems with greater than one mile of pipes or sewer lines to enroll for coverage under the General Order. The General Order requires agencies to develop sanitary sewer management plans (SSMPs) and report all sanitary sewer overflows (SSOs), among other requirements and prohibitions.

Furthermore, the General Order contains requirements for operation and maintenance of collection systems and for reporting and mitigating sanitary sewer overflows. Inasmuch that the Discharger's collection system is part of the system that is subject to this Order, certain standard provisions are applicable as specified in Provisions, section VI.C.5. For instance, the 24-hour reporting requirements in this Order are not included in the General Order. The Discharger must comply with

both the General Order and this Order. The Discharger and public agencies that are discharging wastewater into the facility were required to obtain enrollment for regulation under the General Order by 1 December 2006.

b. Based on a request from the Discharger, the requirement of biosolids storage facilities to be designed and maintained to prevent washout of inundation from a storm or flood with a return frequency of 100 years was changed to not apply to the solar drying of biosolids during the non-flood season (April through October), provided that biosolids are removed and disposed of prior to 1 November of each year. Allowing use of the existing sludge drying beds during the dry season, when the 100-year flood would not occur, allows a reduction in the amount of biosolids that must be transported off-site for disposal.

6. Other Special Provisions

a. **Title 22, or Equivalent, Disinfection Requirements.** To protect public health and safety, wastewater discharged to San Joaquin River, to which Deuel Drain is tributary, shall be oxidized, coagulated, filtered, and adequately disinfected pursuant to DPH reclamation criteria, CCR, Title 22, division 4, chapter 3, (Title 22), or equivalent.

7. Compliance Schedules

a. **Compliance Schedule for Methylmercury.** The State Water Board adopted the Policy for Compliance Schedules in *National Pollutant Discharge Elimination System Permits* (Resolution 2008-0025), which is the governing Policy for compliance schedules in NPDES permits (hereafter "Compliance Schedule Policy"). In accordance with the Compliance Schedule Policy and 40 CFR § 122.47, a Discharger who seeks a compliance schedule must demonstrate additional time is necessary to implement actions to comply with a more stringent permit limitation. The Discharger must provide the following documentation as part of the application requirements:

i. Diligent efforts have been made to quantify pollutant levels in the discharge and the sources of the pollutant in the waste stream, and the results of those efforts;

ii. Source control efforts are currently underway or completed, including compliance with any pollution prevention programs that have established;

iii. A proposed schedule for additional source control measures or waste treatment;

iv. Data demonstrating current treatment facility performance to compare against existing permit effluent limits, as necessary to determine which is the more stringent interim, permit effluent limit to apply if a schedule of compliance is granted;

v. The highest discharge quality that can reasonably be achieved until final compliance is attained;

vi. The proposed compliance schedule is as short as possible, given the type of facilities being constructed or programs being implemented, and industry experience with the time typically required to construct similar facilities or implement similar programs; and

vii. Additional information and analyses to be determined by the Regional Water Board on a case-by-case basis.

Based on information submitted with the ROWD, SMRs, and other miscellaneous submittals, it has been demonstrated to the satisfaction of the Central Valley Water Board that the Discharger needs time to implement actions to comply with the new effluent limitations for methylmercury.

The Delta Mercury Control Program is composed of two phases. Phase 1 spans from 20 October 2011 through the Phase I Delta Mercury Control Program Review, expected to conclude by October 2020. Phase 1 emphasizes studies and pilot projects to develop and evaluate management practices to control methylmercury. Phase 1 includes provisions for: implementing pollution minimization programs and interim mass limits for inorganic (total) mercury point sources in the Delta and Yolo Bypass; controlling sediment-bound mercury in the Delta and Yolo Bypass that may become methylated in agricultural lands, wetland, and open-water habitats; and reducing total mercury loading to San Francisco Bay, as required by the Water Quality Control Plan for the San Francisco Bay Basin.

At the end of Phase 1, the Central Valley Water Board will conduct a Phase 1 Delta Mercury Control Program Review that considers: modification of methylmercury goals, objectives, allocations and/or the Final Compliance Date; implementation of management practices and schedules for methylmercury controls; and adoption of a mercury offset program for dischargers who cannot meet their load and waste load allocations after implementing all reasonable load reduction strategies. The review also will consider other potential public and environmental benefits and negative impacts (e.g., habitat restoration, flood protection, water supply, fish consumption) of attaining the allocations. The fish tissue objectives, the linkage analysis between objectives and sources, and the attainability of the allocations will be re-evaluated based on the findings of Phase 1 control studies and other information. The linkage analysis, fish tissue objectives, allocations, and time schedules shall be adjusted at the end of Phase 1, or subsequent program reviews, if appropriate.

Phase 2 begins after the Phase 1 Delta Mercury Control Program Review or by 20 October 2022, whichever occurs first, and ends in 2030. During Phase 2, dischargers shall implement methylmercury control programs and continue inorganic (total) mercury reduction programs. Compliance monitoring and implementation of upstream control programs also shall occur in Phase 2. Any compliance schedule contained in an NPDES permit must be "…*an enforceable sequence of actions or operations leading to compliance with an effluent limitation…*" per the definition of a compliance schedule in CWA Section 502(17). *See also* 40 CFR § 122.2 (definition of schedule of compliance). The compliance schedule for methylmercury meets these requirements.

Federal Regulations at 40 CFR § 122.47(a)(1) requires that, "*Any schedules of compliance under this section shall require compliance as soon as possible*…" The Compliance Schedule Policy also requires that compliance schedules are as short as possible and may not exceed 10 years, except when *"…a permit limitation that implements or is consistent with the waste load allocations specified in a TMDL that is established through a Basin Plan amendment, provided that the TMDL implementation plan contains a compliance schedule or implementation schedule.*" As discussed above, the Basin Plan's Delta Mercury Control Program includes compliance schedule provisions and allows compliance with the waste load allocations for methylmercury by 2030. Until the Phase 1 Control Studies are complete and the Central Valley Water Board conducts the Phase 1 Delta Mercury Control Program Review, it is not possible to determine the appropriate compliance date for the Discharger that is as soon as possible. Therefore, this Order

establishes a compliance schedule for the new, final, WQBELs for methylmercury with full compliance required by **31 December 2030**, which is consistent with the Final Compliance Date of the TMDL. At completion of the Phase 1 Delta Mercury Control Program Review, the final compliance date for this compliance schedule will be re-evaluated to ensure compliance is required as soon as possible. Considering the available information, the compliance schedule is as short as possible in accordance with federal regulations and the Compliance Schedule Policy.

VII. RATIONALE FOR MONITORING AND REPORTING REQUIREMENTS

Section 122.48 of 40 CFR requires that all NPDES permits specify requirements for recording and reporting monitoring results. Water Code sections 13267 and 13383 authorize the Central Valley Water Board to require technical and monitoring reports. The Monitoring and Reporting Program (MRP), Attachment E, establishes monitoring and reporting requirements that implement federal and state requirements. The following provides the rationale for the monitoring and reporting requirements contained in the MRP for this facility.

A. Influent Monitoring

1. Influent monitoring is required to collect data on the characteristics of the wastewater and to assess compliance with effluent limitations (e.g., BOD_5 and TSS reduction requirements). The monitoring frequencies for flow (continuous), BOD_5 (once per week), TSS (once per week), total dissolved solids (monthly), and electrical conductivity (monthly) are sufficient to evaluate compliance. Monitoring requirements for pH have not been retained from Order R5-2008-0164 as monitoring is no longer necessary to determine compliance with the permit requirements.

B. Effluent Monitoring

1. Pursuant to the requirements of 40 CFR 122.44(i)(2) effluent monitoring is required for all constituents with effluent limitations. Effluent monitoring is necessary to assess compliance with effluent limitations, assess the effectiveness of the treatment process, and to assess the impacts of the discharge on the receiving stream and groundwater.
2. Order R5-2008-0164 established effluent monitoring requirements at Monitoring Locations EFF-003 and EFF-004 to determine compliance with effluent limitations at Discharge Points 003 and 004. As discussed in section II.A of this Fact Sheet, this Order no longer regulates discharges at Discharge Points 003 and 004. Therefore, monitoring requirements at Monitoring Locations EFF-003 and EFF-004 have not been retained from Order R5-2008-0164. The remainder of this discussion applies to Monitoring Location EFF-001 only.
3. Effluent monitoring frequencies and sample types for flow (continuous), BOD_5 (once per week), pH (once per week), TSS (once per week), mercury (monthly), ammonia (weekly), chloride (semiannually), electrical conductivity (monthly), methylmercury (monthly), temperature (once per week), total coliform organisms (weekly), and total dissolved solids (semiannually) are sufficient to determine compliance with effluent limitations, where applicable, and characterize the effluent for these parameters.
4. Monitoring data collected over the term of Order R5-2008-0164 for benzene, bromoform, chlorodibromomethane, and dichlorobromomethane did not demonstrate reasonable potential to exceed water quality objectives/criteria. Thus, specific monitoring requirements for these parameters have not been retained from Order R5-2008-0164.
5. Order R5-2008-0057 required continuous monitoring for chlorine residual. In October 2010, the Discharger completed upgrades to the Facility, which included replacing chlorine disinfection with UV disinfection. Chlorine is now only used when the

Discharger is cleaning the membrane filters, and during cleaning, water flow is stopped and the chlorinated water is rerouted back to the headworks for treatment before being discharged into the receiving water. Due to the conversion to UV disinfection and intermittent chlorine use for filter maintenance, this Order reduces monitoring to once per day when chlorine is used for maintenance of the membrane filters.

6. This Order establishes new effluent limitations for copper and cyanide. Therefore, this Order establishes monthly monitoring for copper and cyanide to determine compliance with the new effluent limitations.

7. This Order establishes monthly monitoring for hardness to ensure that adequate data is available to properly adjust water quality criteria for hardness-based metals.

8. Order R5-2008-0164 established an effluent limitation and monthly monitoring requirements for nitrate. This Order replaces the effluent limitation for nitrate with an effluent limitation for nitrate plus nitrite and establishes a new effluent limitation for nitrite. Therefore, this Order discontinues monitoring requirements for nitrate and establishes monthly monitoring requirements for nitrate plus nitrate and nitrite to determine compliance with the applicable effluent limitations.

9. This Order includes effluent limitations for diazinon and chlorpyrifos based on the applicable TMDL for the Sacramento-San Joaquin Delta. Diazinon and chlorpyrifos were not detected in the effluent during the term of Order R5-2008-0164 and are not expected to be present in the Facility effluent. Therefore, this Order includes annual monitoring for diazinon and chlorpyrifos to characterize the presence in the effluent and determine compliance with the applicable effluent limitations based on the TMDL.

10. In accordance with Section 1.3 of the SIP, periodic monitoring for priority pollutants for which criteria or objectives apply and for which no effluent limitations have been established is required. This Order requires monitoring quarterly during 2016 to collect data to conduct an RPA for the next permit renewal. See Attachment E for more detailed requirements related to performing priority pollutant monitoring.

11. California Water Code section 13176, subdivision (a), states: "*The analysis of any material required by [Water Code sections 13000-16104] shall be performed by a laboratory that has accreditation or certification pursuant to Article 3 (commencing with Section 100825) of Chapter 4 of Part 1 of Division 101 of the Health and Safety Code*." DPH certifies laboratories through its Environmental Laboratory Accreditation Program (ELAP).

    Section 13176 cannot be interpreted in a manner that would violate federal holding time requirements that apply to NPDES permits pursuant to the Clean Water Act. (Wat. Code §§ 13370, subd. (c), 13372, 13377.) Section 13176 is inapplicable to NPDES permits to the extent it is inconsistent with Clean Water Act requirements. (Wat. Code § 13372, subd. (a).) The holding time requirements are 15 minutes for chlorine residual, dissolved oxygen, and pH and immediate analysis is required for temperature. (40 CFR § 136.3(e), Table II) Due to the location of the Facility, it is both legally and factually impossible for the Discharger to comply with section 13176 for constituents with short holding times.

C. Whole Effluent Toxicity Testing Requirements

1. **Acute Toxicity**. Consistent with Order R5-2008-0164, quarterly 96-hour bioassay testing is required to demonstrate compliance with the effluent limitation for acute toxicity.

2. **Chronic Toxicity**. Consistent with Order R5-2008-0164, quarterly chronic whole effluent toxicity testing is required in order to demonstrate compliance with the Basin Plan's narrative toxicity objective.

D. Receiving Water Monitoring

Delta Regional Monitoring Program

The Central Valley Water Board requires individual dischargers and discharger groups to conduct monitoring of Delta waters and Delta tributary waters in the vicinity of their discharge, known as ambient (or receiving) water quality monitoring. This monitoring provides information on the impacts of waste discharges on Delta waters, and on the extant condition of the Delta waters. However, the equivalent funds spent on current monitoring efforts could be used more efficiently and productively, and provide a better understanding of geographic and temporal distributions of contaminants and physical conditions in the Delta, and of other Delta water quality issues, if those funds were used for a coordinated ambient monitoring effort, rather than continue to be used in individual, uncoordinated ambient water quality monitoring programs. The Delta Regional Monitoring Program (RMP) will provide data to better inform management and policy decisions regarding the Delta.

This Order will allow Dischargers to elect to participate in the Delta RMP in lieu of conducting all or part of the individual receiving water monitoring required in the Monitoring and Reporting Program. If the Discharger elects to cease individual receiving water monitoring and participate in the Delta Regional Monitoring Program, the Discharger shall submit a letter signed by an authorized representative to the Executive Officer informing the Board that the Discharger will participate in the Delta Regional Monitoring Program and the date on which individual receiving water monitoring under Attachment E, Sections VIII.A.1 and VIII.A.2, will cease or be modified. Approval by the Executive Officer is required, and contingent on Delta RMP Steering Committee action on the forthcoming RMP monitoring plan.

Delta RMP data is not intended to be used directly to represent either upstream or downstream water quality for purposes of determining compliance with this Permit. Delta RMP monitoring stations are established generally as “integrator sites” to evaluate the combined impacts on water quality of multiple discharges into the Delta; Delta RMP monitoring stations would not normally be able to identify the source of any specific constituent, but would be used to identify water quality issues needing further evaluation. Delta RMP monitoring data may be used to help establish background receiving water quality for Reasonable Potential analyses in an NPDES Permit after evaluation of the applicability of the data for that purpose. In general, monitoring data from samples collected in the immediate vicinity of the discharge will be given greater weight in permitting decisions than receiving water monitoring data collected at greater distances from the discharge point. Delta RMP data, as with all environmental monitoring data, can provide an assessment of water quality at a specific place and time that can be used in conjunction with other information, such as other receiving water monitoring data, spatial and temporal distribution and trends of receiving water data, effluent data from the Discharger’s discharge and other point and non-point source discharges, receiving water flow volume, speed and direction, and other information to determine the likely source or sources of a constituent that resulted in exceedance of a receiving water quality objective.

If the Discharger begins to participate in the Delta Regional Monitoring Program in lieu of individual receiving water monitoring, the Discharger shall continue to participate in the Delta Regional Monitoring Program until such time as the Discharger informs the Board that participation in the Delta RMP will cease and individual monitoring is reinstituted. Receiving water monitoring under Attachment E, Sections VIII.A.1 and VIII.A.2, is not required under this Order so long as the Discharger adequately supports the Delta Regional Monitoring Program. Participation in the Delta RMP by a Discharger shall consist of providing funds and/or in-kind services to the Delta RMP at least equivalent to discontinued individual

monitoring and study efforts. If a discharger or discharger group fails to maintain adequate participation in the Delta RMP, as determined through criteria to be developed by the Delta RMP Steering Committee, the Steering Committee will recommend to the Central Valley Water Board that an individual monitoring program be reinstated for that discharger or discharger group.

If the Discharger is participating in the Delta Regional Monitoring Program as described in Attachment E, Section VIII, the Receiving Water portion of the required Characterization Monitoring need not be conducted by the Discharger. Instead, data from the Delta Regional Monitoring Program will be utilized to characterize the receiving water in the permit renewal. The Discharger may, however, conduct any site-specific receiving water monitoring deemed appropriate by the Discharger and submit that monitoring data with this Characterization Monitoring. In general, monitoring data from samples collected in the immediate vicinity of the discharge will be given greater weight in permitting decisions than receiving water monitoring data collected at greater distances from the discharge point. Historic receiving water monitoring data taken by the discharger and from other sources may also be evaluated to determine whether or not that data is representative of current receiving water conditions. If found to be representative of current conditions, then that historic data may be used in characterizing receiving water quality for the purposes of Reasonable Potential analysis.

1. **Surface Water**

   a. Receiving water monitoring is necessary to assess compliance with receiving water limitations and to assess the impacts of the discharge on the receiving stream.

   b. The receiving water monitoring frequency and sample type at Monitoring Locations RSW-001 and RSW-002 for pH (twice per month), dissolved oxygen (twice per month), electrical conductivity (twice per month), temperature (twice per month), total dissolved solids (monthly), and turbidity (twice per month) have been retained from Order R5-2008-0164.

   c. Monitoring requirements at Monitoring Locations RSW-001 and RSW-002 for total and unionized ammonia, chlorine residual, fecal coliform organisms, nitrate, and standard minerals have not been retained as monitoring is not necessary to determine compliance with permit requirements.

   d. This Order establishes an additional receiving water monitoring location, Monitoring Location RSW-003, located in the San Joaquin River at Paradise Cut, 1,000 feet east of the confluence with Deuel Drain. In accordance with Section 1.3 of the SIP, periodic monitoring for priority pollutants for which criteria or objectives apply and for which no effluent limitations have been established is required. This Order requires monitoring for priority pollutants and other pollutants of concern quarterly during the third year of the permit term, performed concurrently with effluent monitoring, at Monitoring Location RSW-003, in order to collect data to conduct an RPA for the next permit renewal. See Attachment E for more detailed requirements related to performing priority pollutant monitoring.

2. **Groundwater**

   a. Section 13267 states, in part, "(*a) A Regional Water Board, in establishing…waste discharge requirements… may investigate the quality of any waters of the state within its region" and "(b) (1) In conducting an investigation…, the Regional Water Board may require that any person who… discharges… waste…that could affect the quality of waters within its region shall furnish, under penalty of perjury, technical or*

monitoring program reports which the Regional Water Board requires. The burden, including costs, of these reports shall bear a reasonable relationship to the need for the report and the benefits to be obtained from the reports." The burden, including costs, of these reports shall bear a reasonable relationship to the need for the report and the benefits to be obtained from the reports. In requiring those reports, the Regional Water Board shall provide the person with a written explanation with regard to the need for the reports, and shall identify the evidence that supports requiring that person to provide the reports. The Monitoring and Reporting Program (Attachment E) is issued pursuant to California Water Code section 13267. The groundwater monitoring and reporting program required by this Order and the Monitoring and Reporting Program are necessary to assure compliance with these waste discharge requirements. The Discharger is responsible for the discharges of waste at the facility subject to this Order.

b. Monitoring of the groundwater must be conducted to determine if percolation of wastewater contained in the unlined aerated lagoon and unlined facultative/holding ponds at the Facility case an increase in constituent concentrations, when compared to background. The monitoring must, at a minimum, assess groundwater impacts including the vertical and lateral extent of degradation for all wastewater-related constituents which may have migrated to groundwater. If impacts are identified as a result of the groundwater monitoring, the Discharger must analyze whether additional or different methods of treatment or control of the discharge are necessary to provide best practicable treatment or control to comply with Resolution No. 68-16. Economic analysis is only one of many factors considered in determining best practicable treatment or control. If monitoring indicates that the discharge has incrementally increased constituent concentrations in groundwater above background, this permit may be reopened and modified. This Order contains Groundwater Limitations that allow groundwater quality to be degraded for certain constituents when compared to background groundwater quality, but not to exceed water quality objectives. If groundwater quality has been degraded by the discharge, the incremental change in pollutant concentration (when compared with background) may not be increased. If groundwater quality has been or may be degraded by the discharge, this Order may be reopened and specific numerical limitations established consistent with Resolution 68-16 and the Basin Plan.

c. Groundwater monitoring data collected during the previous permit term (in 2005) showed no change in groundwater quality in monitoring wells downstream of wastewater ponds compared to monitoring wells upstream of lagoon and ponds. This Order requires the Discharger to continue groundwater monitoring in accordance with the monitoring plan approved under the previous Order and includes a regular schedule for groundwater monitoring in the attached Monitoring and Reporting Program. The groundwater monitoring reports are necessary to evaluate impacts to waters of the State to assure protection of beneficial uses and compliance with Regional Water Board plans and policies, including Resolution 69-16. Evidence in the record includes effluent monitoring data that indicates the presence of constituents that may degrade groundwater and surface water.

d. Quarterly groundwater monitoring of ammonia, electrical conductivity, groundwater elevation, pH, nitrate, total coliform organisms, and total dissolved solids has been retained from Order R5-2003-0065.

E. Other Monitoring Requirements

1. Biosolids Monitoring

Biosolids monitoring is required to ensure compliance with the biosolids disposal requirements contained in the Special Provision contained in section VI.C.5.a. of this Order. Biosolids disposal requirements are imposed pursuant to 40 CFR Part 503 to protect public health and prevent groundwater degradation.

2. **Water Supply Monitoring**

Water supply monitoring is required to evaluate the source of constituents in the wastewater. Consistent with Order R5-2008-0164, this Order requires monthly monitoring for electrical conductivity and total dissolved solids. This Order discontinues water supply monitoring for standard minerals as monitoring for electrical conductivity and total dissolved solids is sufficient to characterize the salinity of the water supply.

3. **UV Disinfection System Monitoring**

UV system monitoring and reporting are required to ensure that the UV system is operated to adequately inactivate pathogens in the wastewater. UV disinfection system monitoring is imposed to achieve equivalency to requirements established by DPH, and the National Water Research Institute (NWRI), and American Water Works Association Research Foundation NWRI/AWWARF's *"Ultraviolet Disinfection Guidelines for Drinking Water and Water Reuse*."

VIII. PUBLIC PARTICIPATION

The Central Valley Water Board has considered the issuance of WDR's that will serve as an NPDES permit for Deuel Vocational Institution. As a step in the WDR adoption process, the Central Valley Water Board staff has developed tentative WDR's and has encouraged public participation in the WDR adoption process.

A. Notification of Interested Parties

The Central Valley Water Board notified the Discharger and interested agencies and persons of its intent to prescribe WDR's for the discharge and provided an opportunity to submit written comments and recommendations. Notification was provided through the following issuance of a Notice of Public Hearing that was posted on the Central Valley Water Board's website and posted at the Facility, the Tracy City Hall, and local US Post Office.

The public had access to the agenda and any changes in dates and locations through the Central Valley Water Board's website at:
http://www.waterboards.ca.gov/centralvalley/

B. Written Comments

Interested persons were invited to submit written comments concerning tentative WDR's as provided through the notification process. Comments were due either in person or by mail to the Executive Office at the Central Valley Water Board at the address on the cover page of this Order.

To be fully responded to by staff and considered by the Central Valley Water Board, the written comments were due at the Central Valley Water Board office by 5:00 p.m. on 23 December 2013.

C. Public Hearing

The Central Valley Water Board held a public hearing on the tentative WDR's during its regular Board meeting on the following date and time and at the following location:

Date: 7 February 2014
Time: 9:00 a.m.

Location: Regional Water Quality Control Board, Central Valley Region
11020 Sun Center Dr., Suite #200
Rancho Cordova, CA 95670

Interested persons were invited to attend. At the public hearing, the Central Valley Water Board heard testimony pertinent to the discharge, WDR's, and permit. For accuracy of the record, important testimony was requested in writing.

D. Reconsideration of Waste Discharge Requirements

Any aggrieved person may petition the State Water Board to review the decision of the Central Valley Water Board regarding the final WDR's. The petition must be received by the State Water Board at the following address within 30 calendar days of the Central Valley Water Board's action:

State Water Resources Control Board
Office of Chief Counsel
P.O. Box 100, 1001 I Street
Sacramento, CA 95812-0100

For instructions on how to file a petition for review, see
http://www.waterboards.ca.gov/public_notices/petitions/water_quality/wqpetition_instr.shtml

E. Information and Copying

The Report of Waste Discharge, other supporting documents, and comments received are on file and may be inspected at the address above at any time between 8:30 a.m. and 4:45 p.m., Monday through Friday. Copying of documents may be arranged through the Central Valley Water Board by calling (916) 464-3291.

F. Register of Interested Persons

Any person interested in being placed on the mailing list for information regarding the WDR's and NPDES permit should contact the Central Valley Water Board, reference this facility, and provide a name, address, and phone number.

G. Additional Information

Requests for additional information or questions regarding this order should be directed to Kari Holmes at (916) 464-4843.

ATTACHMENT G – SUMMARY OF REASONABLE POTENTIAL ANALYSIS FOR CONSTITUENTS OF CONCERN

Constituent	Units	MEC	B	C	CMC	CCC	Water & Org	Org. Only	Basin Plan	MCL	Reasonable Potential
Aluminum, Total Recoverable	µg/L	20[1]	1,263[1]	200	750[2]	--	--	--	--	200	No
Ammonia Nitrogen, Total (as N)	mg/L	30.3	1.74	0.43	2.14[2]	0.43[3]	--	--	--	--	Yes
Barium, Total Recoverable	µg/L	97.5	164	100	--	--	--	--	100	--	No
Chloride	mg/L	1,020	1,520	230	860[2]	230[4]	--	--	--	250	Inconclusive[5]
Chlorpyrifos	µg/L	<0.071	<0.071	0.015	--	--	--	--	0.015	--	No[6]
Copper, Total Recoverable	µg/L	11.4	16[5]	10.4	52[7]/50[8]	30[7]/29[8]	1,300	--	10.4	1,000	Yes
Cyanide, Total (as CN)	µg/L	7.92	21.8	5.2	22	5.2	700	220,000	10	150	Yes
Diazinon	µg/L	<0.065	<0.065	0.10	--	--	--	--	0.10	--	No[6]
Electrical Conductivity @ 25°C	µmhos/cm	2,244[1]	3,518[1]	900	--	--	--	--	--	900	Inconclusive[5]
Iron, Total Recoverable	µg/L	7.55[1]	1,428[1]	300	--	--	--	--	300	300	No
Lead, Total Recoverable	µg/L	5.5	4	16[7]/3.8[8]	406[7]/99[8]	16[7]/3.8[8]	--	--	--	15	Inconclusive[5]
Manganese, Total Recoverable	µg/L	34.4[1]	606[1]	50	--	--	--	--	50	50	No
Mercury, Total Recoverable	µg/L	0.028	<0.05	0.050	--	--	0.050	0.051	--	2	No
Nitrate Nitrogen, Total (as N)	mg/L	8.32	29	10	--	--	10	--	--	10	Yes
Nitrite Nitrogen, Total (as N)	mg/L	1.87	0.43	1.0	--	--	--	--	--	1.0	Yes

Constituent	Units	MEC	B	C	CMC	CCC	Water & Org	Org. Only	Basin Plan	MCL	Reasonable Potential
Selenium, Total Recoverable	µg/L	17.3	3.6	5	20	5	170	4,200	--	50	Inconclusive[5]
Sulfate	mg/L	202[1]	724[1]	250	--	--	--	--	--	250	Inconclusive[5]
Thallium, Total Recoverable	µg/L	13.4	7.1	1.7	--	--	1.7	6.3	--	2	Inconclusive[5]
Total Dissolved Solids	mg/L	1,595[1]	2,361[1]	500	--	--	--	--	--	500	Inconclusive[5]

General Note: All inorganic concentrations are given as a total recoverable.
MEC = Maximum Effluent Concentration
B = Maximum Receiving Water Concentration or lowest detection level, if non-detect
C = Criterion used for Reasonable Potential Analysis
CMC = Criterion Maximum Concentration (CTR or NTR)
CCC = Criterion Continuous Concentration (CTR or NTR)
Water & Org = Human Health Criterion for Consumption of Water & Organisms (CTR or NTR)
Org. Only = Human Health Criterion for Consumption of Organisms Only (CTR or NTR)
Basin Plan = Numeric Site-specific Basin Plan Water Quality Objective
MCL = Drinking Water Standards Maximum Contaminant Level
NA = Not Available
ND = Non-detect

Footnotes:
(1) Represents the maximum observed annual average concentration for comparison with the Secondary MCL.
(2) USEPA National Recommended Ambient Water Quality Criteria, Freshwater Aquatic Life Protection, 1-hour average.
(3) USEPA National Recommended Ambient Water Quality Criteria, Freshwater Aquatic Life Protection, 30-day average.
(4) USEPA National Recommended Ambient Water Quality Criteria, Freshwater Aquatic Life Protection, 4-day average.
(5) See section IV.C.3 of the Fact Sheet (Attachment F) for a discussion of the RPA results.
(6) As discussed further in Section IV.C.3.a of the Fact Sheet (Attachment F), an effluent limitation for diazinon and chlorpyrifos is established in accordance with the Total Maximum Daily Load for the Sacramento-San Joaquin Delta.
(7) Criteria to be compared to the maximum effluent concentration.
(8) Criteria to be compared to the maximum upstream receiving water concentration.

ATTACHMENT H – CALCULATION OF WQBELS MONITORING LOCATION EFF-001

Parameter	Units	Most Stringent Criteria			HH Calculations[1]			Aquatic Life Calculations[1]											Final Effluent Limitations	
		HH	CMC	CCC	ECA_{HH} = $AMEL_{HH}$	AMEL/MDEL $Multiplier_{HH}$	$MDEL_{HH}$	ECA_{acute}	ECA $Multiplier_{acute}$	LTA_{acute}	$ECA_{chronic}$	ECA $Multiplier_{chronic}$	$LTA_{chronic}$	Lowest LTA	AMEL $Multiplier_{95}$	$AMEL_{AL}$	MDEL $Multiplier_{99}$	$MDEL_{AL}$	Lowest AMEL	Lowest MDEL
Ammonia Nitrogen, Total (as N)[2]	mg/L	--	2.14	0.78	--	--	--	2.14	0.1	0.21	1.35	0.37	0.5	0.21	3.19	0.7	10	2.2	0.7	2.2
Copper, Total Recoverable	µg/L	1,000	52	30	1,000	2.0	2,006	52	0.32	17	30	0.53	16	16	1.55	25	3.1	49	25	10[3]
Cyanide, Total (as CN)	µg/L	150	22	5.2	150	2.0	301	22	0.32	7.1	5	0.53	2.7	2.7	1.55	4.3	3.1	8.5	4.3	8.5

1 As described in section IV.C.2.c of the Fact Sheet (Attachment F), calculation of effluent limitations for the protection of human health and aquatic life are determined without the allowance of dilution credits.

2 As discussed in section IV.C.3.c of the Fact Sheet (Attachment F), this Order retains effluent limitations for ammonia from Order R5-2008-0164. For the purposes of displaying the WQBEL calculations, this table shows the WQBEL calculations based on the CMC of 2.14 mg/L and 30-day CCC of 1.35 mg/L used to calculate effluent limitations in Order R5-2008-0164.

3 As discussed in section IV.C.3.c of the Fact Sheet (Attachment F), this Order establishes an MDEL for copper based on the site-specific Basin Plan objective, which is more stringent than the MDEL calculated based on the CTR criteria.

CALIFORNIA REGIONAL WATER QUALITY CONTROL BOARD
CENTRAL VALLEY REGION

ORDER R5-2014-0122

AMENDING WASTE DISCHARGE REQUIREMENTS TO ALLOW FOR PARTICIPATION IN THE DELTA REGIONAL MONITORING PROGRAM

SACRAMENTO COUNTY
SACRAMENTO REGIONAL COUNTY SANITATION DISTRICT WASTEWATER TREATMENT PLANT
SAN JOAQUIN COUNTY
CALIFORNIA DEPARTMENT OF CORRECTIONS AND REHABILITATION DEUEL VOCATIONAL INSTITUTION, CITY OF STOCKTON REGIONAL WASTEWATER CONTROL FACILITY, CITY OF TRACY WASTEWATER TREATMENT PLANT, MOUNTAIN HOUSE COMMUNITY SERVICES DISTRICT WASTEWATER TREATMENT PLANT, CITY OF LODI WHITE SLOUGH WATER POLLUTION CONTROL FACILITY, LINCOLN CENTER ENVIRONMENTAL REMEDIATION TRUST GROUNDWATER TREATMENT SYSTEM
CONTRA COSTA COUNTY
IRONHOUSE SANITARY DISTRICT WATER RECYCLING FACILITY, CITY OF BRENTWOOD WASTEWATER TREATMENT PLANT, TOWN OF DISCOVERY BAY COMMUNITY SERVICES DISTRICT WASTEWATER TREATMENT PLANT
SOLANO COUNTY
CITY OF RIO VISTA BEACH WASTEWATER TREATMENT FACILITY, CITY OF RIO VISTA NORTHWEST WASTEWATER TREATMENT FACILITY, CITY OF VACAVILLE EASTERLY WASTEWATER TREATMENT PLANT
YOLO COUNTY
CITY OF DAVIS WASTEWATER TREATMENT PLANT

The California Regional Water Quality Control Board, Central Valley Region, (hereafter Central Valley Water Board) finds that:

1. The Sacramento-San Joaquin Delta (Delta) is an important water supply for municipal, industrial and agricultural use for much of the State, and is a critical ecosystem for fish and wildlife, including many rare and endangered species.

2. Understanding the current conditions within the Delta (water quality and beneficial uses) and the potential impacts to those conditions, is important in order to preserve and enhance the Delta, and provide for corresponding regulatory and management decisions, which should be based upon sound science.

3. Currently, many agencies and organizations are conducting monitoring and data evaluation in the Delta, but there is an overall lack of coordinated monitoring and data evaluation for a variety of reasons. This lack of coordination results in the inability to conduct a regional assessment of the water quality and beneficial use conditions within the Delta, and may result in misdirected expenditure of funds for monitoring and water quality improvements.

4. The Central Valley Water Board requires individual dischargers and discharger groups to conduct monitoring of Delta waters and Delta tributary waters in the vicinity of their discharge, known as ambient (or receiving) water quality monitoring. This monitoring provides information on the impacts of waste discharges on Delta waters, and on the extant condition of the Delta waters. However, the equivalent funds spent on current monitoring efforts could be used more efficiently and productively, and provide a better understanding of geographic and temporal distributions of contaminants and physical conditions in the Delta, and of other Delta water quality issues, if those

funds were used for a coordinated ambient monitoring effort, rather than continue to be used in individual, uncoordinated ambient water quality monitoring programs. The Delta Regional Monitoring Program (Delta RMP) will provide data to better inform management and policy decisions regarding the Delta.

5. A Delta RMP is an identified priority in the State Water Resource Control Board's and Central Valley Water Board's Delta Strategic Plan, and a Delta RMP is recommended in the Delta Plan adopted by the Delta Stewardship Council.

6. The Delta RMP is a stakeholder effort to provide improved Delta monitoring and data evaluation. The Delta RMP is still being developed, but to date has:

   A. Established a governance structure that includes a Steering Committee consisting of three representatives from Publicly Owned Treatment Works, two representatives from Municipal Stormwater Permittees, one representative of Irrigated Agriculture, one representative from Coordinated Monitoring Groups, one representative from Water Supply, one representative from State Regulators, one representative from Federal Regulators, and one representative from the Resource Agencies.
   B. Established a Technical Advisory Committee (TAC) with elected Co-Chairs and representatives from each of the Steering Committee seats.
   C. Identified the Aquatic Science Center and Central Valley Water Board staff as providers of technical and logistical support for the Delta RMP.
   D. Established the mission, goals, objectives and guiding principles of the overarching program.

7. The Delta RMP is currently working on a monitoring plan with four focus areas: pathogens, methylmercury, pesticides/toxicity, and nutrients. The monitoring plan should be completed in January 2015. This plan will specify monitoring locations, constituents, and studies, including how the RMP sampling will be coordinated with existing sampling efforts in the Delta by other entities. RMP sampling is currently proposed to begin in April 2015, with an initial focus on pathogens.

8. The Delta RMP needs secure sources of funding to be viable. The exchange of current and future individual monitoring efforts to the Delta RMP and redirection of funding from those individual efforts is one of the potential funding sources for the Delta RMP.

9. It is the intent of the Central Valley Water Board that the initial costs of Delta RMP participation by permitted dischargers should be relatively "cost neutral," in that financial or in-kind participation in the Delta RMP should be reasonably equivalent to the exchange of costs of discontinued individual monitoring and study efforts. However, it is recognized that new and evolving water quality issues will continue to develop in the Delta, and the costs of Delta RMP participation may increase in the future. It is a continuing goal to be cost neutral for permitted dischargers, even as requirements and costs of continued individual monitoring programs change.

10. It is the intent of the Central Valley Water Board that all waste dischargers with the potential to impact Delta water quality will be encouraged to, and have the flexibility to, participate in the Delta RMP.

11. Other sources of funding beyond permitted dischargers will be required to adequately fund the Delta RMP. Agencies and groups who are not waste dischargers, but use or have an interest in Delta waters, are encouraged to participate in the Delta RMP, including providing funding and/or

services, participating in the Steering or technical advisory committees, and coordinating their separate activities with the Delta RMP.

12. Waste discharge requirements are amended to allow dischargers to participate in the Delta RMP in lieu of conducting their current individual monitoring efforts, when feasible and appropriate.

13. The Central Valley Water Board will consider transferring special studies or other permit requirements from individual permits to the Delta RMP on a case-by-case basis, and conversely consider accepting studies conducted by the RMP in lieu of requiring studies by individual dischargers.

14. Participation in the Delta RMP by a Discharger shall consist of providing funds and/or in-kind services to the Delta RMP at least equivalent to discontinued individual monitoring and study efforts. Active participation by discharger representatives on the Delta RMP Steering Committee or technical or other advisory committees that may be formed is encouraged.

15. If a discharger or discharger group fails to maintain adequate participation in the Delta RMP, as determined through criteria to be developed by the Delta RMP Steering Committee, the Steering Committee will recommend to the Central Valley Water Board that an individual monitoring program be reinstated for that discharger or discharger group.

16. The following Sacramento-San Joaquin Delta-area Dischargers' NPDES Permits may be reopened and modified in accordance with the Code of Federal Regulations (CFR) at 40 CFR 122.62(a)(2):

    A. Order R5-2010-0114-03
       - Sacramento Regional County Sanitation District, Sacramento Regional Wastewater Treatment Plant (NPDES No. CA0077682)
    B. Order R5-2014-0014
       - California Department of Corrections and Rehabilitation, Deuel Vocational Institution (NPDES No. CA0078093)
    C. Order R5-2014-0070
       - City of Stockton, Regional Wastewater Control Facility (NPDES No. CA0079138)
    D. Order R5-2012-0115
       - City of Tracy, Tracy Wastewater Treatment Plant (NPDES No. CA0079154)
    E. Order R5-2013-0004
       - Mountain House Community Services District, Mountain House Wastewater Treatment Plant (NPDES No. CA0084271)
    F. Order R5-2013-0125
       - City of Lodi, White Slough Water Pollution Control Facility (NPDES No. CA0079243)
    G. Order R5-2011-0055
       - Lincoln Center Environmental Remediation Trust, Groundwater Treatment System (NPDES No. CA0084255)
    H. Order R5-2013-0157
       - Ironhouse Sanitary District, Water Recycling Facility (NPDES No. CA0085260)
    I. Order R5-2013-0106
       - City of Brentwood, Wastewater Treatment Plant (NPDES No. CA0082660)
    J. Order R5-2014-0073
       - Town of Discovery Bay Community Services District, Discovery Bay Wastewater Treatment Plant (NPDES No. CA0078590)
    K. Order R5-2014-0012

- City of Rio Vista, Beach Wastewater Treatment Facility (NPDES No. CA0079588)

L. Order R5-2010-0081-01
- City of Rio Vista, Northwest Wastewater Treatment Facility (NPDES No. CA0083771)

M. Order R5-2014-0072
- City of Vacaville, Easterly Wastewater Treatment Plant (NPDES No. CA0077691)

N. Order R5-2013-0127
- City of Davis Wastewater Treatment Plant (NPDES No. CA0079049)

17. Issuance of modifications to the NPDES Permit are exempt from the California Environmental Quality Control Act (Public Resources Code section 21000, et seq.) in accordance with California Water Code section 13389.

18. The Central Valley Water Board has notified the Dischargers and interested agencies and persons of its intent to amend Waste Discharge Requirements to allow for the participation in the Delta Regional Monitoring Program and has provided them with an opportunity to submit their written views and recommendations.

IT IS HEREBY ORDERED THAT:
Waste Discharge Requirements listed in Attachments A through N are amended as shown in underline/strikeout format in those Attachments.

Any person aggrieved by this action of the Central Valley Water Board may petition the State Water Resource Control Board (State Water Board) to review the action in accordance with CWC section 13320 and California Code of Regulations, title 23, sections 2050 and following. The State Water Board must receive the petition by 5:00 p.m., 30 days after the date of this Order, except that if the thirtieth day following the date of this Order falls on a Saturday, Sunday, or state holiday (including mandatory furlough days), the petition must be received by the State Water Board by 5:00 p.m. on the next business day. Copies of the law and regulations applicable to filing petitions may be found on the Internet at: http://www.waterboards.ca.gov/public_notices/petitions/water_quality or will be provided upon request.

I, PAMELA C. CREEDON, Executive Officer, do hereby certify the foregoing is a full, true, and correct copy of an Order adopted by the California Regional Water Quality Control Board, Central Valley Region, on 9 October 2014.

ORIGINAL SIGNED BY

PAMELA C. CREEDON, Executive Officer

IT IS HEREBY ORDERED THAT:

Waste Discharge Requirements Order R5-2010-0114-03 (NPDES No. CA0077682) is amended solely to address the Regional Monitoring Program in accordance with the Limitations and Discharge Requirements, section VI.C.1.j. **Effective immediately upon adoption**, Order R5-2010-0114-03 is amended as shown in Items 1-3 below.

1. **Limitations and Discharge Specifications.** Remove section VI.C.1.j, Reopener Provision for Regional Monitoring Program, and add the following text in section VII, Compliance Determination, as shown in underline format below:

   O. Use of Delta Regional Monitoring Program and other Receiving Water Data to determine compliance with Receiving Water Limitations. Delta Regional Monitoring Program data and other receiving water monitoring data that is not specifically required to be conducted by the Discharger under this permit, will not be used directly to determine that the discharge is in violation of this Permit. The Discharger may, however, conduct any site-specific receiving water monitoring deemed appropriate by the Discharger that is not conducted by the Delta RMP and submit that monitoring data. As described in Section VIII of Attachment E, such data may be used, if scientifically defensible, in conjunction with other receiving water data, effluent data, receiving water flow data, and other pertinent information to determine whether or not a discharge is in compliance with this Permit.

2. **Monitoring and Reporting Program.** Add the following text in section VIII, Receiving Water Monitoring Requirements – Surface Water and Groundwater, as shown in underline format below:

   VIII. RECEIVING WATER MONITORING REQUIREMENTS – SURFACE WATER AND GROUNDWATER

   The Discharger shall implement the Receiving Water Monitoring Requirements in Attachment E, Sections VIII.A.1, VIII.A.2 and VIII.A.3 of this Order. However, in lieu of conducting the individual monitoring specified in Attachment E, Sections VIII.A.1, VIII.A.2 and VIII.A.3 of this Order (including visual observations), the Discharger may elect to participate in the Delta Regional Monitoring Program.[1] The Discharger may choose to conduct all or part of the receiving water monitoring through the Delta Regional Monitoring Program. If the Discharger elects to cease all or part of the individual receiving water monitoring and instead participates in the Delta Regional Monitoring Program, the Discharger shall submit a letter signed by an authorized representative informing the Board that the Discharger will participate in the Delta Regional Monitoring Program, and the date on which individual receiving water monitoring required under Attachment E, Sections VIII.A.1, VIII.A.2 and VIII.A.3 will cease, or be modified, and specific monitoring locations and constituent combinations that will no longer be

[1] If the Discharger elects to participate in the Delta RMP, it shall continue to submit receiving water data for temperature. At minimum, one representative upstream receiving water temperature sample shall be submitted annually for the month of January. The temperature data shall be submitted in the January self-monitoring report and will be used to determine compliance with the temperature effluent limitation. Temperature data may be collected by the Discharger for this purpose or the Discharger may submit representative temperature data from the Delta RMP or other appropriate monitoring programs (e.g., Department of Water Resources, United States Geological Survey, etc.).

conducted individually. Written approval of the Discharger's request, by the Executive Officer, is required prior to discontinuing part or all of individual receiving water monitoring. Approval by the Executive Officer is not required prior to participating in the Delta Regional Monitoring Program.

If the Discharger participates in the Delta Regional Monitoring Program in lieu of conducting individual receiving water monitoring, the Discharger shall continue to participate in the Delta Regional Monitoring Program until such time as the Discharger informs the Board that participation in the Delta RMP will cease and individual monitoring is reinstituted. Receiving water monitoring under Attachment E, Sections VIII.A.1, VIII.A.2 and VIII.A.3, is not required under this Order so long as the Discharger adequately supports the Delta Regional Monitoring Program. However, the Report of Waste Discharge for the next permit renewal shall include, at minimum, one representative ambient background characterization monitoring event for priority pollutant constituents during the term of the permit. Data from the Delta Regional Monitoring Program may be utilized to characterize the receiving water in the permit renewal. Alternatively, the Discharger may conduct any site-specific receiving water monitoring deemed appropriate by the Discharger and submit that monitoring data with this Characterization Monitoring. If the Discharger fails to adequately support the Delta Regional Monitoring Program, as defined by the Delta RMP Steering Committee, the Discharger shall reinstitute individual receiving water monitoring under Attachment E, Sections VIII.A.1, VIII.A.2 and VIII.A.3, upon written notice from the Executive Officer. During participation in the Delta RMP, the Discharger may conduct and submit any or part of the receiving water monitoring included in this Monitoring and Reporting Program that is deemed appropriate by the Discharger.

Delta RMP data is not intended to be used directly to represent either upstream or downstream water quality for purposes of determining compliance with this Permit. Delta RMP monitoring stations are established generally as "integrator sites" to evaluate the combined impacts on water quality of multiple discharges into the Delta; Delta RMP monitoring stations would not normally be able to identify the source of any specific constituent, but would be used to identify water quality issues needing further evaluation. Delta RMP monitoring data , along with individual Discharger data, may be used to help establish background receiving water quality for Reasonable Potential analyses in an NPDES Permit after evaluation of the applicability of the data for that purpose. Delta RMP data, as with all environmental monitoring data, can provide an assessment of water quality at a specific place and time that can be used in conjunction with other information, such as other receiving water monitoring data, spatial and temporal distribution and trends of receiving water data, effluent data from the Discharger's discharge and other point and non-point source discharges, receiving water flow volume, speed and direction, and other information to determine the likely source or sources of a constituent that resulted in exceedance of a receiving water quality objective.

During the period of participation in the Delta Regional Monitoring Program, the Discharger shall continue to report any individually conducted receiving water monitoring data in the Electronic Self-Monitoring Reports (eSMR) according to the Monitoring and Reporting Program. In addition, 1) with each submitted eSMR, the Discharger's eSMR cover letter shall state that the Discharger is participating in the Delta Regional Monitoring Program in lieu of conducting the individual receiving water monitoring program required by the permit, and 2) with each annual report, the Discharger shall attach a copy of the letter originally submitted to

the Central Valley Water Board describing the monitoring location(s) and constituent combinations that will no longer be conducted individually.

3. **Fact Sheet.** Remove section VII.B.1.j, Rationale for Reopener Provision for Regional Monitoring Program, and add the following text in section VI.D.1, Rationale for Monitoring and Reporting Requirements, as shown in underline format below:

D. Receiving Water Monitoring

1. Surface Water

Receiving water monitoring is necessary to assess compliance with receiving water limitations and to assess the impacts of the discharge on the receiving stream. New monitoring locations have been added at River Mile 44 and River Mile 43, RSWD-004 and RSWD-005, respectively, to better evaluate impacts in the receiving water.

Delta Regional Monitoring Program

The Central Valley Water Board requires individual dischargers and discharger groups to conduct monitoring of Delta waters and Delta tributary waters in the vicinity of their discharge, known as ambient (or receiving) water quality monitoring. This monitoring provides information on the impacts of waste discharges on Delta waters, and on the extant condition of the Delta waters. However, the equivalent funds spent on current monitoring efforts could be used more efficiently and productively, and provide a better understanding of geographic and temporal distributions of contaminants and physical conditions in the Delta, and of other Delta water quality issues, if those funds were used for a coordinated ambient monitoring effort, rather than continue to be used in individual, uncoordinated ambient water quality monitoring programs. The Delta Regional Monitoring Program (RMP) will provide data to better inform management and policy decisions regarding the Delta.

This Order will allow Dischargers to elect to participate in the Delta RMP in lieu of conducting all or part of the individual receiving water monitoring required in the Monitoring and Reporting Program. If the Discharger elects to cease individual receiving water monitoring and participate in the Delta Regional Monitoring Program, the Discharger shall submit a letter signed by an authorized representative to the Executive Officer informing the Board that the Discharger will participate in the Delta Regional Monitoring Program and the date on which individual receiving water monitoring under Attachment E, Sections VIII.A.1, VIII.A.2 and VIII.A.3, will cease or be modified. Approval by the Executive Officer is required, and contingent on Delta RMP Steering Committee action on the forthcoming RMP monitoring plan.

Delta RMP data is not intended to be used directly to represent either upstream or downstream water quality for purposes of determining compliance with this Permit. Delta RMP monitoring stations are established generally as “integrator sites” to evaluate the combined impacts on water quality of multiple discharges into the Delta; Delta RMP monitoring stations would not normally be able to identify the source of any specific constituent, but would be used to identify water quality issues needing further evaluation. Delta RMP monitoring data may be used to help establish background receiving water

quality for Reasonable Potential analyses in an NPDES Permit after evaluation of the applicability of the data for that purpose. In general, monitoring data from samples collected in the immediate vicinity of the discharge will be given greater weight in permitting decisions than receiving water monitoring data collected at greater distances from the discharge point. Delta RMP data, as with all environmental monitoring data, can provide an assessment of water quality at a specific place and time that can be used in conjunction with other information, such as other receiving water monitoring data, spatial and temporal distribution and trends of receiving water data, effluent data from the Discharger's discharge and other point and non-point source discharges, receiving water flow volume, speed and direction, and other information to determine the likely source or sources of a constituent that resulted in exceedance of a receiving water quality objective.

If the Discharger begins to participate in the Delta Regional Monitoring Program in lieu of individual receiving water monitoring, the Discharger shall continue to participate in the Delta Regional Monitoring Program until such time as the Discharger informs the Board that participation in the Delta RMP will cease and individual monitoring is reinstituted. Receiving water monitoring under Attachment E, Sections VIII.A.1, VIII.A.2 and VIII.A.3, is not required under this Order so long as the Discharger adequately supports the Delta Regional Monitoring Program. Participation in the Delta RMP by a Discharger shall consist of providing funds and/or in-kind services to the Delta RMP at least equivalent to discontinued individual monitoring and study efforts. If a discharger or discharger group fails to maintain adequate participation in the Delta RMP, as determined through criteria to be developed by the Delta RMP Steering Committee, the Steering Committee will recommend to the Central Valley Water Board that an individual monitoring program be reinstated for that discharger or discharger group.

If the Discharger is participating in the Delta Regional Monitoring Program as described in Attachment E, Section VIII, the Receiving Water portion of the required Characterization Monitoring need not be conducted by the Discharger. Instead, data from the Delta Regional Monitoring Program will be utilized to characterize the receiving water in the permit renewal. The Discharger may, however, conduct any site-specific receiving water monitoring deemed appropriate by the Discharger and submit that monitoring data with this Characterization Monitoring. In general, monitoring data from samples collected in the immediate vicinity of the discharge will be given greater weight in permitting decisions than receiving water monitoring data collected at greater distances from the discharge point. Historic receiving water monitoring data taken by the discharger and from other sources may also be evaluated to determine whether or not that data is representative of current receiving water conditions. If found to be representative of current conditions, then that historic data may be used in characterizing receiving water quality for the purposes of Reasonable Potential analysis.

IT IS HEREBY ORDERED THAT:

Waste Discharge Requirements Order R5-2014-0014 (NPDES No. CA0078093) is amended solely to address the Regional Monitoring Program in accordance with the Limitations and Discharge Requirements, section VI.C.1.h. **Effective immediately upon adoption**, Order R5-2014-0014 is amended as shown in Items 1-4 below.

1. **Limitations and Discharge Specifications.** Remove section VI.C.1.h, Reopener Provision for Regional Monitoring Program and add the following text in section VII, Compliance Determination, as shown in underline format below:

   J. Use of Delta Regional Monitoring Program and other Receiving Water Data to determine compliance with Receiving Water Limitations. Delta Regional Monitoring Program data and other receiving water monitoring data that is not specifically required to be conducted by the Discharger under this permit, will not be used directly to determine that the discharge is in violation of this Permit. The Discharger may, however, conduct any site-specific receiving water monitoring deemed appropriate by the Discharger that is not conducted by the Delta RMP and submit that monitoring data. As described in Section VIII of Attachment E, such data may be used, if scientifically defensible, in conjunction with other receiving water data, effluent data, receiving water flow data, and other pertinent information to determine whether or not a discharge is in compliance with this Permit.

2. **Monitoring and Reporting Program.** Add the following text in section VIII, Receiving Water Monitoring Requirements, as shown in underline format below:

   VIII. RECEIVING WATER MONITORING REQUIREMENTS

   The Discharger shall implement the Receiving Water Monitoring Requirements in Attachment E, Sections VIII.A.1 and VIII.A.2 of this Order. However, in lieu of conducting the individual monitoring specified in Attachment E, Sections VIII.A.1 and VIII.A.2 of this Order (including visual observations), the Discharger may elect to participate in the Delta Regional Monitoring Program.[1] The Discharger may choose to conduct all or part of the receiving water monitoring through the Delta Regional Monitoring Program. If the Discharger elects to cease all or part of the individual receiving water monitoring and instead participates in the Delta Regional Monitoring Program, the Discharger shall submit a letter signed by an authorized representative informing the Board that the Discharger will participate in the Delta Regional Monitoring Program, and the date on which individual receiving water monitoring required under Attachment E, Sections VIII.A.1 and VIII.A.2 will cease, or be modified, and specific monitoring locations and constituent combinations that will no longer be conducted individually. Written approval of the Discharger's request, by the Executive Officer, is required

[1] If the Discharger elects to participate in the Delta RMP, it shall continue to submit receiving water data for temperature. At minimum, one representative upstream receiving water temperature sample shall be submitted annually for the month of January. The temperature data shall be submitted in the January self-monitoring report and will be used to determine compliance with the temperature effluent limitation. Temperature data may be collected by the Discharger for this purpose or the Discharger may submit representative temperature data from the Delta RMP or other appropriate monitoring programs (e.g., Department of Water Resources, United States Geological Survey, etc.).

prior to discontinuing part or all of individual receiving water monitoring. Approval by the Executive Officer is not required prior to participating in the Delta Regional Monitoring Program.

If the Discharger participates in the Delta Regional Monitoring Program in lieu of conducting individual receiving water monitoring, the Discharger shall continue to participate in the Delta Regional Monitoring Program until such time as the Discharger informs the Board that participation in the Delta RMP will cease and individual monitoring is reinstituted. Receiving water monitoring under Attachment E, Sections VIII.A.1 and VIII.A.2, is not required under this Order so long as the Discharger adequately supports the Delta Regional Monitoring Program. If the Discharger fails to adequately support the Delta Regional Monitoring Program, as defined by the Delta RMP Steering Committee, the Discharger shall reinstitute individual receiving water monitoring under Attachment E, Sections VIII.A.1 and VIII.A.2, upon written notice from the Executive Officer. During participation in the Delta RMP, the Discharger may conduct and submit any or part of the receiving water monitoring included in this Monitoring and Reporting Program that is deemed appropriate by the Discharger.

Delta RMP data is not intended to be used directly to represent either upstream or downstream water quality for purposes of determining compliance with this Permit. Delta RMP monitoring stations are established generally as “integrator sites” to evaluate the combined impacts on water quality of multiple discharges into the Delta; Delta RMP monitoring stations would not normally be able to identify the source of any specific constituent, but would be used to identify water quality issues needing further evaluation. Delta RMP monitoring data, along with individual Discharger data, may be used to help establish background receiving water quality for Reasonable Potential analyses in an NPDES Permit after evaluation of the applicability of the data for that purpose. Delta RMP data, as with all environmental monitoring data, can provide an assessment of water quality at a specific place and time that can be used in conjunction with other information, such as other receiving water monitoring data, spatial and temporal distribution and trends of receiving water data, effluent data from the Discharger’s discharge and other point and non-point source discharges, receiving water flow volume, speed and direction, and other information to determine the likely source or sources of a constituent that resulted in exceedance of a receiving water quality objective.

During the period of participation in the Delta Regional Monitoring Program, the Discharger shall continue to report any individually conducted receiving water monitoring data in the Electronic Self-Monitoring Reports (eSMR) according to the Monitoring and Reporting Program. In addition, 1) with each submitted eSMR, the Discharger’s eSMR cover letter shall state that the Discharger is participating in the Delta Regional Monitoring Program in lieu of conducting the individual receiving water monitoring program required by the permit, and 2) with each annual report, the Discharger shall attach a copy of the letter originally submitted to the Central Valley Water Board describing the monitoring location(s) and constituent combinations that will no longer be conducted individually.

3. **Monitoring and Reporting Program.** Add text in section IX.D, Effluent and Receiving Water Characterization, shown in underline format below:

D. Effluent and Receiving Water Characterization

If the Discharger is participating in the Delta Regional Monitoring Program as described in Attachment E, Section VIII above, the Receiving Water portion of this Characterization Monitoring is not required. However, the Report of Waste Discharge for the next permit renewal shall include, at minimum, one representative ambient background characterization monitoring event for priority pollutant constituents during the term of the permit. Data from the Delta Regional Monitoring Program may be utilized to characterize the receiving water in the permit renewal. The Discharger may request that the RMP perform sampling and laboratory analysis to address all or a portion of the monitoring under this Characterization Monitoring with the understanding that the Discharger will provide funding to the RMP sufficient to reimburse all of the costs of this additional effort. Alternatively, the Discharger may conduct any site-specific receiving water monitoring deemed appropriate by the Discharger and submit that monitoring data with this Characterization Monitoring. In general, monitoring data from samples collected in the immediate vicinity of the discharge will be given greater weight in permitting decisions than receiving water monitoring data collected at greater distances from the discharge point.

4. **Fact Sheet.** Remove section VI.B.1.h, Rationale for Reopener Provision for Regional Monitoring Program, and add the following text to section VII.D. Rationale for Monitoring and Reporting Requirements, as shown in underline format below:

D. Receiving Water Monitoring

Delta Regional Monitoring Program

The Central Valley Water Board requires individual dischargers and discharger groups to conduct monitoring of Delta waters and Delta tributary waters in the vicinity of their discharge, known as ambient (or receiving) water quality monitoring. This monitoring provides information on the impacts of waste discharges on Delta waters, and on the extant condition of the Delta waters. However, the equivalent funds spent on current monitoring efforts could be used more efficiently and productively, and provide a better understanding of geographic and temporal distributions of contaminants and physical conditions in the Delta, and of other Delta water quality issues, if those funds were used for a coordinated ambient monitoring effort, rather than continue to be used in individual, uncoordinated ambient water quality monitoring programs. The Delta Regional Monitoring Program (RMP) will provide data to better inform management and policy decisions regarding the Delta.

This Order will allow Dischargers to elect to participate in the Delta RMP in lieu of conducting all or part of the individual receiving water monitoring required in the Monitoring and Reporting Program. If the Discharger elects to cease individual receiving water monitoring and participate in the Delta Regional Monitoring Program, the Discharger shall submit a letter signed by an authorized representative to the Executive Officer informing the Board that the Discharger will participate in the Delta Regional Monitoring Program and the date on which individual receiving water monitoring under Attachment E, Sections VIII.A.1 and VIII.A.2, will cease or be modified. Approval by the Executive Officer is required, and contingent on Delta RMP Steering Committee action on the forthcoming RMP monitoring plan.

Delta RMP data is not intended to be used directly to represent either upstream or downstream water quality for purposes of determining compliance with this Permit. Delta RMP monitoring stations are established generally as "integrator sites" to evaluate the combined impacts on water quality of multiple discharges into the Delta; Delta RMP monitoring stations would not normally be able to identify the source of any specific constituent, but would be used to identify water quality issues needing further evaluation. Delta RMP monitoring data may be used to help establish background receiving water quality for Reasonable Potential analyses in an NPDES Permit after evaluation of the applicability of the data for that purpose. In general, monitoring data from samples collected in the immediate vicinity of the discharge will be given greater weight in permitting decisions than receiving water monitoring data collected at greater distances from the discharge point. Delta RMP data, as with all environmental monitoring data, can provide an assessment of water quality at a specific place and time that can be used in conjunction with other information, such as other receiving water monitoring data, spatial and temporal distribution and trends of receiving water data, effluent data from the Discharger's discharge and other point and non-point source discharges, receiving water flow volume, speed and direction, and other information to determine the likely source or sources of a constituent that resulted in exceedance of a receiving water quality objective.

If the Discharger begins to participate in the Delta Regional Monitoring Program in lieu of individual receiving water monitoring, the Discharger shall continue to participate in the Delta Regional Monitoring Program until such time as the Discharger informs the Board that participation in the Delta RMP will cease and individual monitoring is reinstituted. Receiving water monitoring under Attachment E, Sections VIII.A.1 and VIII.A.2, is not required under this Order so long as the Discharger adequately supports the Delta Regional Monitoring Program. Participation in the Delta RMP by a Discharger shall consist of providing funds and/or in-kind services to the Delta RMP at least equivalent to discontinued individual monitoring and study efforts. If a discharger or discharger group fails to maintain adequate participation in the Delta RMP, as determined through criteria to be developed by the Delta RMP Steering Committee, the Steering Committee will recommend to the Central Valley Water Board that an individual monitoring program be reinstated for that discharger or discharger group.

If the Discharger is participating in the Delta Regional Monitoring Program as described in Attachment E, Section VIII, the Receiving Water portion of the required Characterization Monitoring need not be conducted by the Discharger. Instead, data from the Delta Regional Monitoring Program will be utilized to characterize the receiving water in the permit renewal. The Discharger may, however, conduct any site-specific receiving water monitoring deemed appropriate by the Discharger and submit that monitoring data with this Characterization Monitoring. In general, monitoring data from samples collected in the immediate vicinity of the discharge will be given greater weight in permitting decisions than receiving water monitoring data collected at greater distances from the discharge point. Historic receiving water monitoring data taken by the discharger and from other sources may also be evaluated to determine whether or not that data is representative of current receiving water conditions. If found to be representative of current conditions, then that historic data may be used in characterizing receiving water quality for the purposes of Reasonable Potential analysis.

IT IS HEREBY ORDERED THAT:

Waste Discharge Requirements Order R5-2014-0070 (NPDES No. CA0079138) is amended solely to address the Regional Monitoring Program in accordance with the Limitations and Discharge Requirements, section VI.C.1.g. **Effective immediately upon adoption**, Order R5-2014-0070 is amended as shown in Items 1-4 below.

1. **Limitations and Discharge Specifications.** Remove section VI.C.1.g, Reopener Provision for Regional Monitoring Program, and add the following text in section VII, Compliance Determination, as shown in underline format below:

   M. Use of Delta Regional Monitoring Program and other Receiving Water Data to determine compliance with Receiving Water Limitations. Delta Regional Monitoring Program data and other receiving water monitoring data that is not specifically required to be conducted by the Discharger under this permit, will not be used directly to determine that the discharge is in violation of this Permit. The Discharger may, however, conduct any site-specific receiving water monitoring deemed appropriate by the Discharger that is not conducted by the Delta RMP and submit that monitoring data. As described in Section VII of Attachment E, such data may be used, if scientifically defensible, in conjunction with other receiving water data, effluent data, receiving water flow data, and other pertinent information to determine whether or not a discharge is in compliance with this Permit.

2. **Monitoring and Reporting Program.** Add the following text in section VII, Receiving Water Monitoring Requirements, as shown in underline format below:

   VII. RECEIVING WATER MONITORING REQUIREMENTS

   The Discharger shall implement the Receiving Water Monitoring Requirements in Attachment E, Sections VII.A.1, VII.A.2 and VII.B.1 of this Order. However, in lieu of conducting the individual monitoring specified in Attachment E, Sections VII.A.1, VII.A.2 and VII.B.1 of this Order (including visual observations), the Discharger may elect to participate in the Delta Regional Monitoring Program.[1] The Discharger may choose to conduct all or part of the receiving water monitoring through the Delta Regional Monitoring Program. If the Discharger elects to cease all or part of the individual receiving water monitoring and instead participates in the Delta Regional Monitoring Program, the Discharger shall submit a letter signed by an authorized representative informing the Board that the Discharger will participate in the Delta Regional Monitoring Program, and the date on which individual receiving water monitoring required under Attachment E, Sections VII.A.1, VII.A.2 and VII.B.1 will cease, or be modified, and specific monitoring locations and constituent combinations that will no longer be conducted individually. Written approval of the Discharger's request, by the Executive Officer,

[1] If the Discharger elects to participate in the Delta RMP, it shall continue to submit receiving water data for temperature. At minimum, one representative upstream receiving water temperature sample shall be submitted annually for the month of January. The temperature data shall be submitted in the January self-monitoring report and will be used to determine compliance with the temperature effluent limitation. Temperature data may be collected by the Discharger for this purpose or the Discharger may submit representative temperature data from the Delta RMP or other appropriate monitoring programs (e.g., Department of Water Resources, United States Geological Survey, etc.).

is required prior to discontinuing part or all of individual receiving water monitoring. Approval by the Executive Officer is not required prior to participating in the Delta Regional Monitoring Program.

If the Discharger participates in the Delta Regional Monitoring Program in lieu of conducting individual receiving water monitoring, the Discharger shall continue to participate in the Delta Regional Monitoring Program until such time as the Discharger informs the Board that participation in the Delta RMP will cease and individual monitoring is reinstituted. Receiving water monitoring under Attachment E, Sections VII.A.1, VII.A.2 and VII.B.1, is not required under this Order so long as the Discharger adequately supports the Delta Regional Monitoring Program. If the Discharger fails to adequately support the Delta Regional Monitoring Program, as defined by the Delta RMP Steering Committee, the Discharger shall reinstitute individual receiving water monitoring under Attachment E, Sections VII.A.1, VII.A.2 and VII.B.1, upon written notice from the Executive Officer. During participation in the Delta RMP, the Discharger may conduct and submit any or part of the receiving water monitoring included in this Monitoring and Reporting Program that is deemed appropriate by the Discharger.

Delta RMP data is not intended to be used directly to represent either upstream or downstream water quality for purposes of determining compliance with this Permit. Delta RMP monitoring stations are established generally as "integrator sites" to evaluate the combined impacts on water quality of multiple discharges into the Delta; Delta RMP monitoring stations would not normally be able to identify the source of any specific constituent, but would be used to identify water quality issues needing further evaluation. Delta RMP monitoring data, along with individual Discharger data, may be used to help establish background receiving water quality for Reasonable Potential analyses in an NPDES Permit after evaluation of the applicability of the data for that purpose. Delta RMP data, as with all environmental monitoring data, can provide an assessment of water quality at a specific place and time that can be used in conjunction with other information, such as other receiving water monitoring data, spatial and temporal distribution and trends of receiving water data, effluent data from the Discharger's discharge and other point and non-point source discharges, receiving water flow volume, speed and direction, and other information to determine the likely source or sources of a constituent that resulted in exceedance of a receiving water quality objective.

During the period of participation in the Delta Regional Monitoring Program, the Discharger shall continue to report any individually conducted receiving water monitoring data in the Electronic Self-Monitoring Reports (eSMR) according to the Monitoring and Reporting Program. In addition1) with each submitted eSMR, the Discharger's eSMR cover letter shall state that the Discharger is participating in the Delta Regional Monitoring Program in lieu of conducting the individual receiving water monitoring program required by the permit, and 2) with each annual report, the Discharger shall attach a copy of the letter originally submitted to the Central Valley Water Board describing the monitoring location(s) and constituent combinations that will no longer be conducted individually.

3. **Monitoring and Reporting Program.** Add text in section VIII.D, Effluent and Receiving Water Characterization, as shown in underline format below:

D. Effluent and Receiving Water Characterization

If the Discharger is participating in the Delta Regional Monitoring Program as described in Attachment E, Section VII above, the Receiving Water portion of this Characterization is not required. However, the Report of Waste Discharge for the next permit renewal shall include, at minimum, one representative ambient background characterization monitoring event for priority pollutant constituents during the term of the permit. Data from the Delta Regional Monitoring Program may be utilized to characterize the receiving water in the permit renewal. The Discharger may request that the RMP perform sampling and laboratory analysis to address all or a portion of the monitoring under this Characterization Monitoring with the understanding that the Discharger will provide funding to the RMP sufficient to reimburse all of the costs of this additional effort. Alternatively, the Discharger may conduct any site-specific receiving water monitoring deemed appropriate by the Discharger and submit that monitoring data with the Characterization Monitoring. In general, monitoring data from samples collected in the immediate vicinity of the discharge will be given greater weight in permitting decisions than receiving water monitoring data collected at greater distances from the discharge point.

4. **Fact Sheet.** Add the following text to section VII.D., Rationale for Monitoring and Reporting Requirements, as shown in underline format below:

D. Receiving Water Monitoring

Delta Regional Monitoring Program

The Central Valley Water Board requires individual dischargers and discharger groups to conduct monitoring of Delta waters and Delta tributary waters in the vicinity of their discharge, known as ambient (or receiving) water quality monitoring. This monitoring provides information on the impacts of waste discharges on Delta waters, and on the extant condition of the Delta waters. However, the equivalent funds spent on current monitoring efforts could be used more efficiently and productively, and provide a better understanding of geographic and temporal distributions of contaminants and physical conditions in the Delta, and of other Delta water quality issues, if those funds were used for a coordinated ambient monitoring effort, rather than continue to be used in individual, uncoordinated ambient water quality monitoring programs. The Delta Regional Monitoring Program (RMP) will provide data to better inform management and policy decisions regarding the Delta.

This Order will allow Dischargers to elect to participate in the Delta RMP in lieu of conducting all or part of the individual receiving water monitoring required in the Monitoring and Reporting Program. If the Discharger elects to cease individual receiving water monitoring and participate in the Delta Regional Monitoring Program, the Discharger shall submit a letter signed by an authorized representative to the Executive Officer informing the Board that the Discharger will participate in the Delta Regional Monitoring Program and the date on which individual receiving water monitoring under Attachment E, Sections VII.A.1, VII.A.2 and VII.B.1, will cease or be modified. Approval by the Executive Officer is required, and contingent on Delta RMP Steering Committee action on the forthcoming RMP monitoring plan.

Delta RMP data is not intended to be used directly to represent either upstream or downstream water quality for purposes of determining compliance with this Permit. Delta RMP monitoring stations are established generally as "integrator sites" to evaluate the combined impacts on water quality of multiple discharges into the Delta; Delta RMP monitoring stations would not normally be able to identify the source of any specific constituent, but would be used to identify water quality issues needing further evaluation. Delta RMP monitoring data may be used to help establish background receiving water quality for Reasonable Potential analyses in an NPDES Permit after evaluation of the applicability of the data for that purpose. In general, monitoring data from samples collected in the immediate vicinity of the discharge will be given greater weight in permitting decisions than receiving water monitoring data collected at greater distances from the discharge point. Delta RMP data, as with all environmental monitoring data, can provide an assessment of water quality at a specific place and time that can be used in conjunction with other information, such as other receiving water monitoring data, spatial and temporal distribution and trends of receiving water data, effluent data from the Discharger's discharge and other point and non-point source discharges, receiving water flow volume, speed and direction, and other information to determine the likely source or sources of a constituent that resulted in exceedance of a receiving water quality objective.

If the Discharger begins to participate in the Delta Regional Monitoring Program in lieu of individual receiving water monitoring, the Discharger shall continue to participate in the Delta Regional Monitoring Program until such time as the Discharger informs the Board that participation in the Delta RMP will cease and individual monitoring is reinstituted. Receiving water monitoring under Attachment E, Sections VII.A.1, VII.A.2 and VII.B.1, is not required under this Order so long as the Discharger adequately supports the Delta Regional Monitoring Program. Participation in the Delta RMP by a Discharger shall consist of providing funds and/or in-kind services to the Delta RMP at least equivalent to discontinued individual monitoring and study efforts. If a discharger or discharger group fails to maintain adequate participation in the Delta RMP, as determined through criteria to be developed by the Delta RMP Steering Committee, the Steering Committee will recommend to the Central Valley Water Board that an individual monitoring program be reinstated for that discharger or discharger group.

If the Discharger is participating in the Delta Regional Monitoring Program as described in Attachment E, Section VII, the Receiving Water portion of the required Characterization Monitoring need not be conducted by the Discharger. Instead, data from the Delta Regional Monitoring Program will be utilized to characterize the receiving water in the permit renewal. The Discharger may, however, conduct any site-specific receiving water monitoring deemed appropriate by the Discharger and submit that monitoring data with this Characterization Monitoring. In general, monitoring data from samples collected in the immediate vicinity of the discharge will be given greater weight in permitting decisions than receiving water monitoring data collected at greater distances from the discharge point. Historic receiving water monitoring data taken by the discharger and from other sources may also be evaluated to determine whether or not that data is representative of current receiving water conditions. If found to be representative of current conditions, then that historic data may be used in characterizing receiving water quality for the purposes of Reasonable Potential analysis.

IT IS HEREBY ORDERED THAT:

Waste Discharge Requirements Order R5-2012-0115 (NPDES No. CA0079154) is amended solely to address the Regional Monitoring Program in accordance with the Limitations and Discharge Requirements, section VI.C.1.h. **Effective immediately upon adoption**, Order R5-2012-0115 is amended as shown in Items 1-5 below.

1. **Limitations and Discharge Specifications.** Remove section VI.C.1.h, Reopener Provision for Regional Monitoring Program, and add the following text in section VII, Compliance Determination, as shown in underline format below:

   M. Use of Delta Regional Monitoring Program and other Receiving Water Data to determine compliance with Receiving Water Limitations. Delta Regional Monitoring Program data and other receiving water monitoring data that is not specifically required to be conducted by the Discharger under this permit, will not be used directly to determine that the discharge is in violation of this Permit. The Discharger may, however, conduct any site-specific receiving water monitoring deemed appropriate by the Discharger that is not conducted by the Delta RMP and submit that monitoring data. As described in Section VIII of Attachment E, such data may be used, if scientifically defensible, in conjunction with other receiving water data, effluent data, receiving water flow data, and other pertinent information to determine whether or not a discharge is in compliance with this Permit.

2. **Monitoring and Reporting Program.** Add the following text in section VIII, Receiving Water Monitoring Requirements – Surface Water and Groundwater, as shown in underline format below:

   VIII. RECEIVING WATER MONITORING REQUIREMENTS – SURFACE WATER AND GROUNDWATER

   The Discharger shall implement the Receiving Water Monitoring Requirements in Attachment E, Section VIII.A.1 of this Order. However, in lieu of conducting the individual monitoring specified in Attachment E, Section VIII.A.1 of this Order (including visual observations), the Discharger may elect to participate in the Delta Regional Monitoring Program.[1] The Discharger may choose to conduct all or part of the receiving water monitoring through the Delta Regional Monitoring Program. If the Discharger elects to cease all or part of the individual receiving water monitoring and instead participates in the Delta Regional Monitoring Program, the Discharger shall submit a letter signed by an authorized representative informing the Board that the Discharger will participate in the Delta Regional Monitoring Program, and the date on which individual receiving water monitoring required under Attachment E, Section VIII.A.1 will cease, or be modified, and specific monitoring locations and constituent combinations that will no longer be conducted individually. Written approval of

[1] If the Discharger elects to participate in the Delta RMP, it shall continue to submit receiving water data for temperature. At minimum, one representative upstream receiving water temperature sample shall be submitted annually for the month of January. The temperature data shall be submitted in the January self-monitoring report and will be used to determine compliance with the temperature effluent limitation. Temperature data may be collected by the Discharger for this purpose or the Discharger may submit representative temperature data from the Delta RMP or other appropriate monitoring programs (e.g., Department of Water Resources, United States Geological Survey, etc.).

the Discharger's request, by the Executive Officer, is required prior to discontinuing part or all of individual receiving water monitoring. Approval by the Executive Officer is not required prior to participating in the Delta Regional Monitoring Program.

If the Discharger participates in the Delta Regional Monitoring Program in lieu of conducting individual receiving water monitoring, the Discharger shall continue to participate in the Delta Regional Monitoring Program until such time as the Discharger informs the Board that participation in the Delta RMP will cease and individual monitoring is reinstituted. Receiving water monitoring under Attachment E, Section VIII.A.1, is not required under this Order so long as the Discharger adequately supports the Delta Regional Monitoring Program. If the Discharger fails to adequately support the Delta Regional Monitoring Program, as defined by the Delta RMP Steering Committee, the Discharger shall reinstitute individual receiving water monitoring under Attachment E, Section VIII.A.1, upon written notice from the Executive Officer. During participation in the Delta RMP, the Discharger may conduct and submit any or part of the receiving water monitoring included in this Monitoring and Reporting Program that is deemed appropriate by the Discharger.

Delta RMP data is not intended to be used directly to represent either upstream or downstream water quality for purposes of determining compliance with this Permit. Delta RMP monitoring stations are established generally as "integrator sites" to evaluate the combined impacts on water quality of multiple discharges into the Delta; Delta RMP monitoring stations would not normally be able to identify the source of any specific constituent, but would be used to identify water quality issues needing further evaluation. Delta RMP monitoring data, along with individual Discharger data, may be used to help establish background receiving water quality for Reasonable Potential analyses in an NPDES Permit after evaluation of the applicability of the data for that purpose. Delta RMP data, as with all environmental monitoring data, can provide an assessment of water quality at a specific place and time that can be used in conjunction with other information, such as other receiving water monitoring data, spatial and temporal distribution and trends of receiving water data, effluent data from the Discharger's discharge and other point and non-point source discharges, receiving water flow volume, speed and direction, and other information to determine the likely source or sources of a constituent that resulted in exceedance of a receiving water quality objective.

During the period of participation in the Delta Regional Monitoring Program, the Discharger shall continue to report any individually conducted receiving water monitoring data in the Electronic Self-Monitoring Reports (eSMR) according to the Monitoring and Reporting Program. In addition, 1) with each submitted eSMR, the Discharger's eSMR cover letter shall state that the Discharger is participating in the Delta Regional Monitoring Program in lieu of conducting the individual receiving water monitoring program required by the permit, and 2) with each annual report, the Discharger shall attach a copy of the letter originally submitted to the Central Valley Water Board describing the monitoring location(s) and constituent combinations that will no longer be conducted individually.

3. **Monitoring and Reporting Program.** Add text in section X.D.5, Effluent and Receiving Water Characterization Study, as shown in underline format below:

D. Effluent and Receiving Water Characterization Study. An effluent and receiving water monitoring study is required to ensure adequate information is available for the permit renewal. During the third year of this permit term, the Discharger shall conduct bi-monthly monitoring of the effluent at EFF-001 and of the receiving water at RSW-001 for all priority pollutants and other constituents of concern as described in Attachment I. To complete the SIP requirements for Dioxin and Furan monitoring, during the term of this Order Dioxin and Furan sampling shall be performed for three consecutive years during dry weather, as described in Attachment J. ~~The report shall be completed in conformance with the following schedule.~~

If the Discharger is participating in the Delta Regional Monitoring Program as described in Attachment E, Section VIII, the Receiving Water portion of this Characterization Study is not required. However, the Report of Waste Discharge for the next permit renewal shall include, at minimum, one representative ambient background characterization monitoring event for priority pollutant constituents during the term of the permit. Data from the Delta Regional Monitoring Program may be utilized to characterize the receiving water in the permit renewal. The Discharger may request that the RMP perform sampling and laboratory analysis to address all or a portion of the monitoring under this Characterization study with the understanding that the Discharger will provide funding to the RMP sufficient to reimburse all of the costs of this additional effort. Alternatively, the Discharger may conduct any site-specific receiving water monitoring deemed appropriate by the Discharger and submit that monitoring data with this Characterization Study. In general, monitoring data from samples collected in the immediate vicinity of the discharge will be given greater weight in permitting decisions than receiving water monitoring data collected at greater distances from the discharge point.

The report shall be completed in conformance with the following schedule.

4. **Fact Sheet.** Add the following text in section VI.D.1, Rationale for Monitoring and Reporting Requirements, as shown in underline format below:

D. Receiving Water Monitoring

1. Surface Water

Receiving water monitoring is necessary to assess compliance with receiving water limitations and to assess the impacts of the discharge on the receiving stream.

Delta Regional Monitoring Program

The Central Valley Water Board requires individual dischargers and discharger groups to conduct monitoring of Delta waters and Delta tributary waters in the vicinity of their discharge, known as ambient (or receiving) water quality monitoring. This monitoring provides information on the impacts of waste discharges on Delta waters, and on the extant condition of the Delta waters. However, the equivalent funds spent on current monitoring efforts could be used more efficiently and productively, and provide a better understanding of geographic and temporal distributions of contaminants and physical

conditions in the Delta, and of other Delta water quality issues, if those funds were used for a coordinated ambient monitoring effort, rather than continue to be used in individual, uncoordinated ambient water quality monitoring programs. The Delta Regional Monitoring Program (RMP) will provide data to better inform management and policy decisions regarding the Delta.

This Order will allow Dischargers to elect to participate in the Delta RMP in lieu of conducting all or part of the individual receiving water monitoring required in the Monitoring and Reporting Program. If the Discharger elects to cease individual receiving water monitoring and participate in the Delta Regional Monitoring Program, the Discharger shall submit a letter signed by an authorized representative to the Executive Officer informing the Board that the Discharger will participate in the Delta Regional Monitoring Program and the date on which individual receiving water monitoring under Attachment E, Section VIII.A.1, will cease or be modified. Approval by the Executive Officer is required, and contingent on Delta RMP Steering Committee action on the forthcoming RMP monitoring plan.

Delta RMP data is not intended to be used directly to represent either upstream or downstream water quality for purposes of determining compliance with this Permit. Delta RMP monitoring stations are established generally as “integrator sites” to evaluate the combined impacts on water quality of multiple discharges into the Delta; Delta RMP monitoring stations would not normally be able to identify the source of any specific constituent, but would be used to identify water quality issues needing further evaluation. Delta RMP monitoring data may be used to help establish background receiving water quality for Reasonable Potential analyses in an NPDES Permit after evaluation of the applicability of the data for that purpose. In general, monitoring data from samples collected in the immediate vicinity of the discharge will be given greater weight in permitting decisions than receiving water monitoring data collected at greater distances from the discharge point. Delta RMP data, as with all environmental monitoring data, can provide an assessment of water quality at a specific place and time that can be used in conjunction with other information, such as other receiving water monitoring data, spatial and temporal distribution and trends of receiving water data, effluent data from the Discharger’s discharge and other point and non-point source discharges, receiving water flow volume, speed and direction, and other information to determine the likely source or sources of a constituent that resulted in exceedance of a receiving water quality objective.

If the Discharger begins to participate in the Delta Regional Monitoring Program in lieu of individual receiving water monitoring, the Discharger shall continue to participate in the Delta Regional Monitoring Program until such time as the Discharger informs the Board that participation in the Delta RMP will cease and individual monitoring is reinstituted. Receiving water monitoring under Attachment E, Sections VIII.A.1, is not required under this Order so long as the Discharger adequately supports the Delta Regional Monitoring Program. Participation in the Delta RMP by a Discharger shall consist of providing funds and/or in-kind services to the Delta RMP at least equivalent to discontinued individual monitoring and study efforts. If a discharger or discharger group fails to maintain adequate participation in the Delta RMP, as determined through criteria to be developed by the Delta RMP Steering Committee, the Steering Committee will recommend to the Central Valley Water Board that an individual monitoring program be reinstated for that discharger or discharger group.

If the Discharger is participating in the Delta Regional Monitoring Program as described in Attachment E, Section VIII, the Receiving Water portion of the required Characterization Study need not be conducted by the Discharger. Instead, data from the Delta Regional Monitoring Program will be utilized to characterize the receiving water in the permit renewal. The Discharger may, however, conduct any site-specific receiving water monitoring deemed appropriate by the Discharger and submit that monitoring data with this Characterization Study. In general, monitoring data from samples collected in the immediate vicinity of the discharge will be given greater weight in permitting decisions than receiving water monitoring data collected at greater distances from the discharge point. Historic receiving water monitoring data taken by the discharger and from other sources may also be evaluated to determine whether or not that data is representative of current receiving water conditions. If found to be representative of current conditions, then that historic data may be used in characterizing receiving water quality for the purposes of Reasonable Potential analysis.

5. **Effluent and Receiving Water Characterization Study (Attachment I).** Add language to section II, Monitoring Requirements, as shown in underline format below:

II. Monitoring Requirements

If the Discharger is participating in the Delta Regional Monitoring Program as described in Attachment E, Section VIII, the Receiving Water portion of this Characterization Study is not required. However, the Report of Waste Discharge for the next permit renewal shall include, at minimum, one representative ambient background characterization monitoring event for priority pollutant constituents during the term of the permit. Data from the Delta Regional Monitoring Program plus any receiving water characterization conducted by the Discharger will be utilized to characterize the receiving water in the permit renewal. The Discharger may request that the RMP perform sampling and laboratory analysis to address all or a portion of the monitoring under this Characterization Monitoring with the understanding that the Discharger will provide funding to the RMP sufficient to reimburse all of the costs of this additional effort. Alternatively, the Discharger may conduct any site-specific receiving water monitoring deemed appropriate by the Discharger and submit that monitoring data with this Characterization Monitoring. In general, monitoring data from samples collected in the immediate vicinity of the discharge will be given greater weight in permitting decisions than receiving water monitoring data collected at greater distances from the discharge point.

IT IS HEREBY ORDERED THAT:

Waste Discharge Requirements Order R5-2013-0004 (NPDES No. CA0084271) is amended solely to address the Regional Monitoring Program in accordance with the Limitations and Discharge Requirements, section VI.C.1.j. **Effective immediately upon adoption**, Order R5-2013-0004 is amended as shown in Items 1-5 below.

1. **Limitations and Discharge Specifications.** Remove section VI.C.1.j, Reopener Provision for Regional Monitoring Program, and add the following text in section VII, Compliance Determination, as shown in underline format below:

   I. Use of Delta Regional Monitoring Program and other Receiving Water Data to determine compliance with Receiving Water Limitations. Delta Regional Monitoring Program data and other receiving water monitoring data that is not specifically required to be conducted by the Discharger under this permit, will not be used directly to determine that the discharge is in violation of this Permit. The Discharger may, however, conduct any site-specific receiving water monitoring deemed appropriate by the Discharger that is not conducted by the Delta RMP and submit that monitoring data. As described in Section VIII of Attachment E, such data may be used, if scientifically defensible, in conjunction with other receiving water data, effluent data, receiving water flow data, and other pertinent information to determine whether or not a discharge is in compliance with this Permit.

2. **Monitoring and Reporting Program.** Add the following text in section VIII, Receiving Water Monitoring Requirements – Surface Water and Groundwater, as shown in underline format below:

   VIII. RECEIVING WATER MONITORING REQUIREMENTS – SURFACE WATER AND GROUNDWATER

   The Discharger shall implement the Receiving Water Monitoring Requirements in Attachment E, Sections VIII.A.1 and VIII.A.2 of this Order. However, in lieu of conducting the individual monitoring specified in Attachment E, Sections VIII.A.1 and VIII.A.2 of this Order (including visual observations), the Discharger may elect to participate in the Delta Regional Monitoring Program.[1] The Discharger may choose to conduct all or part of the receiving water monitoring through the Delta Regional Monitoring Program. If the Discharger elects to cease all or part of the individual receiving water monitoring and instead participates in the Delta Regional Monitoring Program, the Discharger shall submit a letter signed by an authorized representative informing the Board that the Discharger will participate in the Delta Regional Monitoring Program, and the date on which individual receiving water monitoring required under Attachment E, Sections VIII.A.1 and VIII.A.2 will cease, or be modified, and specific monitoring locations and constituent combinations that will no longer be conducted

[1] If the Discharger elects to participate in the Delta RMP, it shall continue to submit receiving water data for temperature. At minimum, one representative upstream receiving water temperature sample shall be submitted annually for the month of January. The temperature data shall be submitted in the January self-monitoring report and will be used to determine compliance with the temperature effluent limitation. Temperature data may be collected by the Discharger for this purpose or the Discharger may submit representative temperature data from the Delta RMP or other appropriate monitoring programs (e.g., Department of Water Resources, United States Geological Survey, etc.).

individually. Written approval of the Discharger's request, by the Executive Officer, is required prior to discontinuing part or all of individual receiving water monitoring. Approval by the Executive Officer is not required prior to participating in the Delta Regional Monitoring Program.

If the Discharger participates in the Delta Regional Monitoring Program in lieu of conducting individual receiving water monitoring, the Discharger shall continue to participate in the Delta Regional Monitoring Program until such time as the Discharger informs the Board that participation in the Delta RMP will cease and individual monitoring is reinstituted. Receiving water monitoring under Attachment E, Sections VIII.A.1 and VIII.A.2, is not required under this Order so long as the Discharger adequately supports the Delta Regional Monitoring Program. If the Discharger fails to adequately support the Delta Regional Monitoring Program, as defined by the Delta RMP Steering Committee, the Discharger shall reinstitute individual receiving water monitoring under Attachment E, Sections VIII.A.1 and VIII.A.2, upon written notice from the Executive Officer. During participation in the Delta RMP, the Discharger may conduct and submit any or part of the receiving water monitoring included in this Monitoring and Reporting Program that is deemed appropriate by the Discharger.

Delta RMP data is not intended to be used directly to represent either upstream or downstream water quality for purposes of determining compliance with this Permit. Delta RMP monitoring stations are established generally as "integrator sites" to evaluate the combined impacts on water quality of multiple discharges into the Delta; Delta RMP monitoring stations would not normally be able to identify the source of any specific constituent, but would be used to identify water quality issues needing further evaluation. Delta RMP monitoring data, along with individual Discharger data, may be used to help establish background receiving water quality for Reasonable Potential analyses in an NPDES Permit after evaluation of the applicability of the data for that purpose. Delta RMP data, as with all environmental monitoring data, can provide an assessment of water quality at a specific place and time that can be used in conjunction with other information, such as other receiving water monitoring data, spatial and temporal distribution and trends of receiving water data, effluent data from the Discharger's discharge and other point and non-point source discharges, receiving water flow volume, speed and direction, and other information to determine the likely source or sources of a constituent that resulted in exceedance of a receiving water quality objective.

During the period of participation in the Delta Regional Monitoring Program, the Discharger shall continue to report any individually conducted receiving water monitoring data in the Electronic Self-Monitoring Reports (eSMR) according to the Monitoring and Reporting Program. In addition, with each submitted eSMR, 1) with each submitted eSMR, the Discharger's eSMR cover letter shall state that the Discharger is participating in the Delta Regional Monitoring Program in lieu of conducting the individual receiving water monitoring program required by the permit, and 2) with each annual report, the Discharger shall attach a copy of the letter originally submitted to the Central Valley Water Board describing the monitoring location(s) and constituent combinations that will no longer be conducted individually.

3. **Monitoring and Reporting Program.** Add text in section X.D.4, Effluent and Receiving Water Characterization Study, as shown in underline format below:

   4. Effluent and Receiving Water Characterization Study. An effluent and receiving water monitoring study is required to ensure adequate information is available for the permit renewal. The Discharger shall conduct quarterly monitoring of the effluent at Monitoring Location EFF-001 and of the receiving water at Monitoring Location RSW-003 during the third or fourth year of this permit term for all priority pollutants and other constituents of concern as described in Attachment I. ~~The report shall be completed in conformance with the following schedule.~~

   If the Discharger is participating in the Delta Regional Monitoring Program as described in Attachment E, Section VIII, the Receiving Water portion of this Characterization Study is not required. However, the Report of Waste Discharge for the next permit renewal shall include, at minimum, one representative ambient background characterization monitoring event for priority pollutant constituents during the term of the permit. Data from the Delta Regional Monitoring Program may be utilized to characterize the receiving water in the permit renewal. The Discharger may request that the RMP perform sampling and laboratory analysis to address all or a portion of the monitoring under this Characterization Study with the understanding that the Discharger will provide funding to the RMP sufficient to reimburse all of the costs of this additional effort. Alternatively, the Discharger may conduct any site-specific receiving water monitoring deemed appropriate by the Discharger and submit that monitoring data with this Characterization Study. In general, monitoring data from samples collected in the immediate vicinity of the discharge will be given greater weight in permitting decisions than receiving water monitoring data collected at greater distances from the discharge point.

   The report shall be completed in conformance with the following schedule.

4. **Fact Sheet.** Add section VI.D.1.f, Rationale for Monitoring and Reporting Requirements, as shown in underline format below:

   D. Receiving Water Monitoring

   1. Surface Water

   a. Receiving water monitoring is necessary to assess compliance with receiving water limitations and to assess the impacts of the discharge on the receiving stream.

   b. Receiving water monitoring frequencies and sample types for dissolved oxygen (weekly), electrical conductivity (weekly), hardness (monthly), pH, (weekly), and temperature (weekly) have been retained from Order R5-2007-0039.

   c. Receiving water monitoring requirements contained in Order R5-2007-0039 at Monitoring Location RSW-004 have not been retained because they are not necessary to determine compliance with limitations and requirements of this Order.

   d. Receiving water monitoring requirements for chloroform, phosphorus, total kjedahl nitrogen, total organic carbon, and standard minerals have not been retained from Order

R5-2007-0039 as they are not necessary to determine compliance with requirements of this Order.

e. Priority pollutant data for the receiving water has been provided by the Discharger over the term of Order R5-2007-0039, and was used to conduct a meaningful RPA. In accordance with Section 1.3 of the SIP, periodic monitoring for priority pollutants for which criteria or objectives apply and for which no effluent limitations have been established is required. During the third or fourth year of this permit term, the Discharger shall perform quarterly monitoring for priority pollutants and other pollutants of concern, performed concurrently with effluent monitoring, at Monitoring Location RSW-003 during outgoing tide when Monitoring Location RSW-003 is upstream of Discharge Point No. 001 in order to collect data to conduct an RPA for the next permit renewal. See Attachment I for more detailed requirements related to performing priority pollutant monitoring.

f. Delta Regional Monitoring Program

The Central Valley Water Board requires individual dischargers and discharger groups to conduct monitoring of Delta waters and Delta tributary waters in the vicinity of their discharge, known as ambient (or receiving) water quality monitoring. This monitoring provides information on the impacts of waste discharges on Delta waters, and on the extant condition of the Delta waters. However, the equivalent funds spent on current monitoring efforts could be used more efficiently and productively, and provide a better understanding of geographic and temporal distributions of contaminants and physical conditions in the Delta, and of other Delta water quality issues, if those funds were used for a coordinated ambient monitoring effort, rather than continue to be used in individual, uncoordinated ambient water quality monitoring programs. The Delta Regional Monitoring Program (RMP) will provide data to better inform management and policy decisions regarding the Delta.

This Order will allow Dischargers to elect to participate in the Delta RMP in lieu of conducting all or part of the individual receiving water monitoring required in the Monitoring and Reporting Program. If the Discharger elects to cease individual receiving water monitoring and participate in the Delta Regional Monitoring Program, the Discharger shall submit a letter signed by an authorized representative to the Executive Officer informing the Board that the Discharger will participate in the Delta Regional Monitoring Program and the date on which individual receiving water monitoring under Attachment E, Sections VIII.A.1 and VIII.A.2, will cease or be modified. Approval by the Executive Officer is required, and contingent on Delta RMP Steering Committee action on the forthcoming RMP monitoring plan.

Delta RMP data is not intended to be used directly to represent either upstream or downstream water quality for purposes of determining compliance with this Permit. Delta RMP monitoring stations are established generally as “integrator sites” to evaluate the combined impacts on water quality of multiple discharges into the Delta; Delta RMP monitoring stations would not normally be able to identify the source of any specific constituent, but would be used to identify water quality issues needing further evaluation. Delta RMP monitoring data may be used to help establish background receiving water quality for Reasonable Potential analyses in an NPDES Permit after evaluation of the applicability of the data for that purpose. In general, monitoring data from samples

collected in the immediate vicinity of the discharge will be given greater weight in permitting decisions than receiving water monitoring data collected at greater distances from the discharge point. Delta RMP data, as with all environmental monitoring data, can provide an assessment of water quality at a specific place and time that can be used in conjunction with other information, such as other receiving water monitoring data, spatial and temporal distribution and trends of receiving water data, effluent data from the Discharger's discharge and other point and non-point source discharges, receiving water flow volume, speed and direction, and other information to determine the likely source or sources of a constituent that resulted in exceedance of a receiving water quality objective.

If the Discharger begins to participate in the Delta Regional Monitoring Program in lieu of individual receiving water monitoring, the Discharger shall continue to participate in the Delta Regional Monitoring Program until such time as the Discharger informs the Board that participation in the Delta RMP will cease and individual monitoring is reinstituted. Receiving water monitoring under Attachment E, Sections VIII.A.1 and VIII.A.2, is not required under this Order so long as the Discharger adequately supports the Delta Regional Monitoring Program. Participation in the Delta RMP by a Discharger shall consist of providing funds and/or in-kind services to the Delta RMP at least equivalent to discontinued individual monitoring and study efforts. If a discharger or discharger group fails to maintain adequate participation in the Delta RMP, as determined through criteria to be developed by the Delta RMP Steering Committee, the Steering Committee will recommend to the Central Valley Water Board that an individual monitoring program be reinstated for that discharger or discharger group.

If the Discharger is participating in the Delta Regional Monitoring Program as described in Attachment E, Section VIII, the Receiving Water portion of the required Characterization Study need not be conducted by the Discharger. Instead, data from the Delta Regional Monitoring Program will be utilized to characterize the receiving water in the permit renewal. The Discharger may, however, conduct any site-specific receiving water monitoring deemed appropriate by the Discharger and submit that monitoring data with this Characterization Study. In general, monitoring data from samples collected in the immediate vicinity of the discharge will be given greater weight in permitting decisions than receiving water monitoring data collected at greater distances from the discharge point. Historic receiving water monitoring data taken by the discharger and from other sources may also be evaluated to determine whether or not that data is representative of current receiving water conditions. If found to be representative of current conditions, then that historic data may be used in characterizing receiving water quality for the purposes of Reasonable Potential analysis.

5. **Effluent and Receiving Water Characterization Study (Attachment I).** Add language to section II, Monitoring Requirements, as shown in underline format below:

II. Monitoring Requirements

<u>If the Discharger is participating in the Delta Regional Monitoring Program as described in Attachment E, Section VIII, the Receiving Water portion of this Characterization Study is not required. However, the Report of Waste Discharge for the next permit renewal shall include, at minimum, one representative ambient background characterization monitoring event for priority pollutant constituents during the term of the permit. Data from the Delta Regional Monitoring Program plus any receiving water characterization conducted by the Discharger will be utilized to characterize the receiving water in the permit renewal. The Discharger may request that the RMP perform sampling and laboratory analysis to address all or a portion of the monitoring under this Characterization Study with the understanding that the Discharger will provide funding to the RMP sufficient to reimburse all of the costs of this additional effort. Alternatively, the Discharger may conduct any site-specific receiving water monitoring deemed appropriate by the Discharger and submit that monitoring data with this Characterization Study. In general, monitoring data from samples collected in the immediate vicinity of the discharge will be given greater weight in permitting decisions than receiving water monitoring data collected at greater distances from the discharge point.</u>

IT IS HEREBY ORDERED THAT:

Waste Discharge Requirements Order R5-2013-0125 (NPDES No. CA0079243) is amended solely to address the Regional Monitoring Program in accordance with the Limitations and Discharge Requirements, section VI.C.1.g. **Effective immediately upon adoption**, Order R5-2013-0125 is amended as shown in Items 1-4 below.

1. **Limitations and Discharge Specifications.** Remove section VI.C.1.g, Reopener Provision for Regional Monitoring Program, and add the following text in section VII, Compliance Determination, as shown in underline format below:

   I. **Use of Delta Regional Monitoring Program and other Receiving Water Data to determine compliance with Receiving Water Limitations.** Delta Regional Monitoring Program data and other receiving water monitoring data that is not specifically required to be conducted by the Discharger under this permit, will not be used directly to determine that the discharge is in violation of this Permit. The Discharger may, however, conduct any site-specific receiving water monitoring deemed appropriate by the Discharger that is not conducted by the Delta RMP and submit that monitoring data. As described in Section VIII of Attachment E, such data may be used, if scientifically defensible, in conjunction with other receiving water data, effluent data, receiving water flow data, and other pertinent information to determine whether or not a discharge is in compliance with this Permit.

2. **Monitoring and Reporting Program.** Add the following text in section VIII, Receiving Water Monitoring Requirements – Surface Water, as shown in underline format below:

   VIII. RECEIVING WATER MONITORING REQUIREMENTS – SURFACE WATER

   The Discharger shall implement the Receiving Water Monitoring Requirements in Attachment E, Section VIII.A.1 of this Order. However, in lieu of conducting the individual monitoring specified in Attachment E, Section VIII.A.1 of this Order (including visual observations), the Discharger may elect to participate in the Delta Regional Monitoring Program. The Discharger may choose to conduct all or part of the receiving water monitoring through the Delta Regional Monitoring Program. If the Discharger elects to cease all or part of the individual receiving water monitoring and instead participates in the Delta Regional Monitoring Program, the Discharger shall submit a letter signed by an authorized representative informing the Board that the Discharger will participate in the Delta Regional Monitoring Program, and the date on which individual receiving water monitoring required under Attachment E, Section VIII.A.1 will cease, or be modified, and specific monitoring locations and constituent combinations that will no longer be conducted individually. Written approval of the Discharger's request, by the Executive Officer, is required prior to discontinuing part or all of individual receiving water monitoring. Approval by the Executive Officer is not required prior to participating in the Delta Regional Monitoring Program.

   If the Discharger participates in the Delta Regional Monitoring Program in lieu of conducting individual receiving water monitoring, the Discharger shall continue to participate in the Delta Regional Monitoring Program until such time as the Discharger informs the Board that participation in the Delta RMP will cease and individual monitoring is reinstituted. Receiving water monitoring under Attachment E, Section VIII.A.1, is not required under this Order so long as the Discharger adequately supports the Delta Regional Monitoring Program. If the

Discharger fails to adequately support the Delta Regional Monitoring Program, as defined by the Delta RMP Steering Committee, the Discharger shall reinstitute individual receiving water monitoring under Attachment E, Section VIII.A.1, upon written notice from the Executive Officer. During participation in the Delta RMP, the Discharger may conduct and submit any or part of the receiving water monitoring included in this Monitoring and Reporting Program that is deemed appropriate by the Discharger.

Delta RMP data is not intended to be used directly to represent either upstream or downstream water quality for purposes of determining compliance with this Permit. Delta RMP monitoring stations are established generally as "integrator sites" to evaluate the combined impacts on water quality of multiple discharges into the Delta; Delta RMP monitoring stations would not normally be able to identify the source of any specific constituent, but would be used to identify water quality issues needing further evaluation. Delta RMP monitoring data, along with individual Discharger data, may be used to help establish background receiving water quality for Reasonable Potential analyses in an NPDES Permit after evaluation of the applicability of the data for that purpose. Delta RMP data, as with all environmental monitoring data, can provide an assessment of water quality at a specific place and time that can be used in conjunction with other information, such as other receiving water monitoring data, spatial and temporal distribution and trends of receiving water data, effluent data from the Discharger's discharge and other point and non-point source discharges, receiving water flow volume, speed and direction, and other information to determine the likely source or sources of a constituent that resulted in exceedance of a receiving water quality objective.

During the period of participation in the Delta Regional Monitoring Program, the Discharger shall continue to report any individually conducted receiving water monitoring data in the Electronic Self-Monitoring Reports (eSMR) according to the Monitoring and Reporting Program. In addition, 1) with each submitted eSMR, the Discharger's eSMR cover letter shall state that the Discharger is participating in the Delta Regional Monitoring Program in lieu of conducting the individual receiving water monitoring program required by the permit, and 2) with each annual report, the Discharger shall attach a copy of the letter originally submitted to the Central Valley Water Board describing the monitoring location(s) and constituent combinations that will no longer be conducted individually.

3. **Fact Sheet.** Add section VI.D.1.b, Rationale for Monitoring and Reporting Requirements, as shown in underline format below:

D. Receiving Water Monitoring

1. Surface Water

a. Receiving water monitoring is necessary to assess compliance with receiving water limitations and to assess the impacts of the discharge on the receiving stream.

b. Delta Regional Monitoring Program

The Central Valley Water Board requires individual dischargers and discharger groups to conduct monitoring of Delta waters and Delta tributary waters in the vicinity of their

discharge, known as ambient (or receiving) water quality monitoring. This monitoring provides information on the impacts of waste discharges on Delta waters, and on the extant condition of the Delta waters. However, the equivalent funds spent on current monitoring efforts could be used more efficiently and productively, and provide a better understanding of geographic and temporal distributions of contaminants and physical conditions in the Delta, and of other Delta water quality issues, if those funds were used for a coordinated ambient monitoring effort, rather than continue to be used in individual, uncoordinated ambient water quality monitoring programs. The Delta Regional Monitoring Program (RMP) will provide data to better inform management and policy decisions regarding the Delta.

This Order will allow Dischargers to elect to participate in the Delta RMP in lieu of conducting all or part of the individual receiving water monitoring required in the Monitoring and Reporting Program. If the Discharger elects to cease individual receiving water monitoring and participate in the Delta Regional Monitoring Program, the Discharger shall submit a letter signed by an authorized representative to the Executive Officer informing the Board that the Discharger will participate in the Delta Regional Monitoring Program and the date on which individual receiving water monitoring under Attachment E, Section VIII.A.1, will cease or be modified. Approval by the Executive Officer is required, and contingent on Delta RMP Steering Committee action on the forthcoming RMP monitoring plan.

Delta RMP data is not intended to be used directly to represent either upstream or downstream water quality for purposes of determining compliance with this Permit. Delta RMP monitoring stations are established generally as “integrator sites” to evaluate the combined impacts on water quality of multiple discharges into the Delta; Delta RMP monitoring stations would not normally be able to identify the source of any specific constituent, but would be used to identify water quality issues needing further evaluation. Delta RMP monitoring data may be used to help establish background receiving water quality for Reasonable Potential analyses in an NPDES Permit after evaluation of the applicability of the data for that purpose. In general, monitoring data from samples collected in the immediate vicinity of the discharge will be given greater weight in permitting decisions than receiving water monitoring data collected at greater distances from the discharge point. Delta RMP data, as with all environmental monitoring data, can provide an assessment of water quality at a specific place and time that can be used in conjunction with other information, such as other receiving water monitoring data, spatial and temporal distribution and trends of receiving water data, effluent data from the Discharger’s discharge and other point and non-point source discharges, receiving water flow volume, speed and direction, and other information to determine the likely source or sources of a constituent that resulted in exceedance of a receiving water quality objective.

If the Discharger begins to participate in the Delta Regional Monitoring Program in lieu of individual receiving water monitoring, the Discharger shall continue to participate in the Delta Regional Monitoring Program until such time as the Discharger informs the Board that participation in the Delta RMP will cease and individual monitoring is reinstituted. Receiving water monitoring under Attachment E, Section VIII.A.1, is not required under this Order so long as the Discharger adequately supports the Delta Regional Monitoring Program. Participation in the Delta RMP by a Discharger shall

consist of providing funds and/or in-kind services to the Delta RMP at least equivalent to discontinued individual monitoring and study efforts. If a discharger or discharger group fails to maintain adequate participation in the Delta RMP, as determined through criteria to be developed by the Delta RMP Steering Committee, the Steering Committee will recommend to the Central Valley Water Board that an individual monitoring program be reinstated for that discharger or discharger group.

If the Discharger is participating in the Delta Regional Monitoring Program as described in Attachment E, Section VIII, the Receiving Water portion of the required Characterization Study need not be conducted by the Discharger. Instead, data from the Delta Regional Monitoring Program will be utilized to characterize the receiving water in the permit renewal. The Discharger may, however, conduct any site-specific receiving water monitoring deemed appropriate by the Discharger and submit that monitoring data with this Characterization Study. In general, monitoring data from samples collected in the immediate vicinity of the discharge will be given greater weight in permitting decisions than receiving water monitoring data collected at greater distances from the discharge point. Historic receiving water monitoring data taken by the discharger and from other sources may also be evaluated to determine whether or not that data is representative of current receiving water conditions. If found to be representative of current conditions, then that historic data may be used in characterizing receiving water quality for the purposes of Reasonable Potential analysis.

4. **Effluent and Receiving Water Characterization Study (Attachment I).** Add language to section II, Monitoring Requirements, as shown in underline format below:

II. Monitoring Requirements

If the Discharger is participating in the Delta Regional Monitoring Program as described in Attachment E, Section VIII, the Receiving Water portion of this Characterization Study is not required. However, the Report of Waste Discharge for the next permit renewal shall include, at minimum, one representative ambient background characterization monitoring event for priority pollutant constituents during the term of the permit. Data from the Delta Regional Monitoring Program plus any receiving water characterization conducted by the Discharger will be utilized to characterize the receiving water in the permit renewal. The Discharger may request that the RMP perform sampling and laboratory analysis to address all or a portion of the monitoring under this Characterization Monitoring with the understanding that the Discharger will provide funding to the RMP sufficient to reimburse all of the costs of this additional effort. Alternatively, the Discharger may conduct any site-specific receiving water monitoring deemed appropriate by the Discharger and submit that monitoring data with this Characterization Monitoring. In general, monitoring data from samples collected in the immediate vicinity of the discharge will be given greater weight in permitting decisions than receiving water monitoring data collected at greater distances from the discharge point.

IT IS HEREBY ORDERED THAT:

Waste Discharge Requirements Order R5-2011-0055 (NPDES No. CA0084255) is amended solely to address the Regional Monitoring Program in accordance with the Limitations and Discharge Requirements, section VI.C.1.a. **Effective immediately upon adoption**, Order R5-2011-0055 is amended as shown in Items 1-4 below.

1. **Limitations and Discharge Specifications.** Add the following text in section VII, Compliance Determination, as shown in underline format below:

   D. Use of Delta Regional Monitoring Program and other Receiving Water Data to determine compliance with Receiving Water Limitations. Delta Regional Monitoring Program data and other receiving water monitoring data that is not specifically required to be conducted by the Discharger under this permit, will not be used directly to determine that the discharge is in violation of this Permit. The Discharger may, however, conduct any site-specific receiving water monitoring deemed appropriate by the Discharger that is not conducted by the Delta RMP and submit that monitoring data. As described in Section VIII of Attachment E, such data may be used, if scientifically defensible, in conjunction with other receiving water data, effluent data, receiving water flow data, and other pertinent information to determine whether or not a discharge is in compliance with this Permit.

2. **Monitoring and Reporting Program.** Add the following text in section VIII, Receiving Water Monitoring Requirements – Surface Water and Groundwater, as shown in underline format below:

   VIII. RECEIVING WATER MONITORING REQUIREMENTS – SURFACE WATER AND GROUNDWATER

   The Discharger shall implement the Receiving Water Monitoring Requirements in Attachment E, Sections VIII.A.1, VIII.A.2, VIII.B.1 and VIII.C.1 of this Order. However, in lieu of conducting the individual monitoring specified in Attachment E, Sections VIII.A.1, VIII.A.2, VIII.B.1 and VIII.C.1 of this Order (including visual observations), the Discharger may elect to participate in the Delta Regional Monitoring Program. The Discharger may choose to conduct all or part of the receiving water monitoring through the Delta Regional Monitoring Program. If the Discharger elects to cease all or part of the individual receiving water monitoring and instead participates in the Delta Regional Monitoring Program, the Discharger shall submit a letter signed by an authorized representative informing the Board that the Discharger will participate in the Delta Regional Monitoring Program, and the date on which individual receiving water monitoring required under Attachment E, Sections VIII.A.1, VIII.A.2, VIII.B.1 and VIII.C.1 will cease, or be modified, and specific monitoring locations and constituent combinations that will no longer be conducted individually. Written approval of the Discharger's request, by the Executive Officer, is required prior to discontinuing part or all of individual receiving water monitoring. Approval by the Executive Officer is not required prior to participating in the Delta Regional Monitoring Program.

   If the Discharger participates in the Delta Regional Monitoring Program in lieu of conducting individual receiving water monitoring, the Discharger shall continue to participate in the Delta Regional Monitoring Program until such time as the Discharger informs the Board that participation in the Delta RMP will cease and individual monitoring is reinstituted. Receiving

water monitoring under Attachment E, Sections VIII.A.1, VIII.A.2, VIII.B.1 and VIII.C.1, is not required under this Order so long as the Discharger adequately supports the Delta Regional Monitoring Program. If the Discharger fails to adequately support the Delta Regional Monitoring Program, as defined by the Delta RMP Steering Committee, the Discharger shall reinstitute individual receiving water monitoring under Attachment E, Sections VIII.A.1, VIII.A.2, VIII.B.1 and VIII.C.1, upon written notice from the Executive Officer. During participation in the Delta RMP, the Discharger may conduct and submit any or part of the receiving water monitoring included in this Monitoring and Reporting Program that is deemed appropriate by the Discharger.

Delta RMP data is not intended to be used directly to represent either upstream or downstream water quality for purposes of determining compliance with this Permit. Delta RMP monitoring stations are established generally as "integrator sites" to evaluate the combined impacts on water quality of multiple discharges into the Delta; Delta RMP monitoring stations would not normally be able to identify the source of any specific constituent, but would be used to identify water quality issues needing further evaluation. Delta RMP monitoring data, along with individual Discharger data, may be used to help establish background receiving water quality for Reasonable Potential analyses in an NPDES Permit after evaluation of the applicability of the data for that purpose. Delta RMP data, as with all environmental monitoring data, can provide an assessment of water quality at a specific place and time that can be used in conjunction with other information, such as other receiving water monitoring data, spatial and temporal distribution and trends of receiving water data, effluent data from the Discharger's discharge and other point and non-point source discharges, receiving water flow volume, speed and direction, and other information to determine the likely source or sources of a constituent that resulted in exceedance of a receiving water quality objective.

During the period of participation in the Delta Regional Monitoring Program, the Discharger shall continue to report any individually conducted receiving water monitoring data in the Electronic Self-Monitoring Reports (eSMR) according to the Monitoring and Reporting Program. In addition, 1) with each submitted eSMR, the Discharger's eSMR cover letter shall state that the Discharger is participating in the Delta Regional Monitoring Program in lieu of conducting the individual receiving water monitoring program required by the permit, and 2) with each annual report, the Discharger shall attach a copy of the letter originally submitted to the Central Valley Water Board describing the monitoring location(s) and constituent combinations that will no longer be conducted individually.

3. **Fact Sheet.** Add section VI.D.1.e, Rationale for Monitoring and Reporting Requirements, as shown in underline format below:

D. Receiving Water Monitoring

1. Surface Water

a. Receiving water monitoring is necessary to assess compliance with receiving water limitations and to assess the impacts of the discharge on the receiving stream.

Order No. R5-2005-0144-01 established monitoring requirements at Monitoring Location R-001, that was thought to be located 100 feet upstream from the outfall of the storm

drain to Fourteen Mile Slough. However, the Facility actually discharges to a storm drain that terminates at the head of Fourteen Mile Slough, and is upstream of R-001. Therefore, there is no physical upstream receiving water monitoring location and it is infeasible to collect upstream receiving water samples. Therefore, this Order discontinues monitoring requirements at Monitoring Location R-001. Rather than renumbering the monitoring locations, this Order includes receiving water monitoring at Monitoring Locations RSW-002, RSW-003, and RSW-004.

b. Monitoring Location RSW-002

i. Monitoring Location RSW-002 is located in Fourteen Mile Slough approximately 200 feet downstream of the outfall of the storm drain to Fourteen Mile Slough.

ii. Receiving water monitoring frequencies and sample types for barium, dissolved oxygen, electrical conductivity, hardness, and turbidity have been retained from Order No. R5-2005-0144-01.

iii. This Order requires effluent monitoring for ammonia monthly. This Order revises the receiving water monitoring frequency for pH and temperature, which are necessary to adjust water quality criteria for ammonia, from quarterly to monthly to be consistent with effluent monitoring requirements for ammonia.

iv. Order No. R5-2005-0144-01 established monitoring requirements for chloride, total dissolved solids, iron, manganese, sulfate, and chlordane. Receiving water monitoring for these constituent is not necessary to determine compliance with the requirements of this Order. Therefore, monitoring requirements for these constituents have not been retained in this Order.

c. Monitoring Location RSW-003

i. Order No. R5-2005-0144-01 established Monitoring Location RSW-003, located approximately 5,500 feet downstream of the outfall of the storm drain to Fourteen Mile Slough at the Feather River Drive Bridge, in order to verify the results of the Discharger's mixing zone/dilution study for arsenic and barium. Monitoring Location RSW-003 is located approximately 600 feet downstream of the I-5 overpass at the Feather River Drive Bridge due to access and safety concerns at the I-5 overpass.

ii. Receiving water monitoring frequencies and sample types for flow, tide stage, pH, arsenic, barium, electrical conductivity, and temperature have been retained from Order No. R5-2005-0144-01.

d. Monitoring Location RSW-004

i. Order No. R5-2005-0144-01 established Monitoring Location RSW-004, located approximately 6.4 miles downstream of the outfall of the storm drain to Fourteen Mile Slough at Juggler's Island (i.e., the confluence of the San Joaquin River and Fourteen Mile Slough), in order to verify the results of the Discharger's mixing zone/dilution study for arsenic and barium. Because Fourteen Mile Slough is tidally influenced, Monitoring Location RSW-004 is expected to provide a more

representative location for ambient background receiving water sampling to verify the appropriateness of the mixing zones/dilution credits for arsenic and barium.

ii. Receiving water monitoring frequencies and sample types for pH, arsenic, barium, electrical conductivity, and temperature have been retained from Order No. R5-2005-0144-01.

The Discharger's dilution/mixing zone study for arsenic and barium indicated that the San Joaquin River at Juggler's Island (i.e., the confluence of Fourteen Mile Slough and the San Joaquin River), where the tidally influenced waters originate for Fourteen Mile Slough, is a more representative location for ambient background receiving water sampling. Therefore, consistent with the effluent monitoring requirements, quarterly monitoring during the third or fourth year of the permit term for priority pollutants at RSW-004 is required to collect the necessary data to determine reasonable potential as required in section 1.2 of the SIP. The hardness (as $CaCO_3$) of the receiving water shall also be monitored concurrently with the priority pollutants, as well as pH, to ensure the water quality criteria/objectives are correctly adjusted for the receiving water when determining reasonable potential as specified in section 1.3 of the SIP. See Attachment I for more detailed requirements related to performing priority pollutant monitoring.

e. Delta Regional Monitoring Program

The Central Valley Water Board requires individual dischargers and discharger groups to conduct monitoring of Delta waters and Delta tributary waters in the vicinity of their discharge, known as ambient (or receiving) water quality monitoring. This monitoring provides information on the impacts of waste discharges on Delta waters, and on the extant condition of the Delta waters. However, the equivalent funds spent on current monitoring efforts could be used more efficiently and productively, and provide a better understanding of geographic and temporal distributions of contaminants and physical conditions in the Delta, and of other Delta water quality issues, if those funds were used for a coordinated ambient monitoring effort, rather than continue to be used in individual, uncoordinated ambient water quality monitoring programs. The Delta Regional Monitoring Program (RMP) will provide data to better inform management and policy decisions regarding the Delta.

This Order will allow Dischargers to elect to participate in the Delta RMP in lieu of conducting all or part of the individual receiving water monitoring required in the Monitoring and Reporting Program. If the Discharger elects to cease individual receiving water monitoring and participate in the Delta Regional Monitoring Program, the Discharger shall submit a letter signed by an authorized representative to the Executive Officer informing the Board that the Discharger will participate in the Delta Regional Monitoring Program and the date on which individual receiving water monitoring under Attachment E, Sections VIII.A.1, VIII.A.2, VIII.B.1 and VIII.C.1, will cease or be modified. Approval by the Executive Officer is - required, and contingent on Delta RMP Steering Committee action on the forthcoming RMP monitoring plan.

Delta RMP data is not intended to be used directly to represent either upstream or downstream water quality for purposes of determining compliance with this Permit. Delta RMP monitoring stations are established generally as "integrator sites" to evaluate the

combined impacts on water quality of multiple discharges into the Delta; Delta RMP monitoring stations would not normally be able to identify the source of any specific constituent, but would be used to identify water quality issues needing further evaluation. Delta RMP monitoring data may be used to help establish background receiving water quality for Reasonable Potential analyses in an NPDES Permit after evaluation of the applicability of the data for that purpose. In general, monitoring data from samples collected in the immediate vicinity of the discharge will be given greater weight in permitting decisions than receiving water monitoring data collected at greater distances from the discharge point. Delta RMP data, as with all environmental monitoring data, can provide an assessment of water quality at a specific place and time that can be used in conjunction with other information, such as other receiving water monitoring data, spatial and temporal distribution and trends of receiving water data, effluent data from the Discharger's discharge and other point and non-point source discharges, receiving water flow volume, speed and direction, and other information to determine the likely source or sources of a constituent that resulted in exceedance of a receiving water quality objective.

If the Discharger begins to participate in the Delta Regional Monitoring Program in lieu of individual receiving water monitoring, the Discharger shall continue to participate in the Delta Regional Monitoring Program until such time as the Discharger informs the Board that participation in the Delta RMP will cease and individual monitoring is reinstituted. Receiving water monitoring under Attachment E, Sections VIII.A.1, VIII.A.2, VIII.B.1 and VIII.C.1, is not required under this Order so long as the Discharger adequately supports the Delta Regional Monitoring Program. Participation in the Delta RMP by a Discharger shall consist of providing funds and/or in-kind services to the Delta RMP at least equivalent to discontinued individual monitoring and study efforts. If a discharger or discharger group fails to maintain adequate participation in the Delta RMP, as determined through criteria to be developed by the Delta RMP Steering Committee, the Steering Committee will recommend to the Central Valley Water Board that an individual monitoring program be reinstated for that discharger or discharger group.

If the Discharger is participating in the Delta Regional Monitoring Program as described in Attachment E, Section VIII, the Receiving Water portion of the required Characterization Study need not be conducted by the Discharger. Instead, data from the Delta Regional Monitoring Program will be utilized to characterize the receiving water in the permit renewal. The Discharger may, however, conduct any site-specific receiving water monitoring deemed appropriate by the Discharger and submit that monitoring data with this Characterization Study. In general, monitoring data from samples collected in the immediate vicinity of the discharge will be given greater weight in permitting decisions than receiving water monitoring data collected at greater distances from the discharge point. Historic receiving water monitoring data taken by the discharger and from other sources may also be evaluated to determine whether or not that data is representative of current receiving water conditions. If found to be representative of current conditions, then that historic data may be used in characterizing receiving water quality for the purposes of Reasonable Potential analysis.

4. **Effluent and Receiving Water Characterization Study (Attachment I).** Add language to section II, Monitoring Requirements, as shown in underline format below:

II. Monitoring Requirements

<u>If the Discharger is participating in the Delta Regional Monitoring Program as described in Attachment E, Section VIII, the Receiving Water portion of this Characterization Study is not required. However, the Report of Waste Discharge for the next permit renewal shall include, at minimum, one representative ambient background characterization monitoring event for priority pollutant constituents during the term of the permit. Data from the Delta Regional Monitoring Program plus any receiving water characterization conducted by the Discharger will be utilized to characterize the receiving water in the permit renewal. The Discharger may request that the RMP perform sampling and laboratory analysis to address all or a portion of the monitoring under this Characterization Monitoring with the understanding that the Discharger will provide funding to the RMP sufficient to reimburse all of the costs of this additional effort. Alternatively, the Discharger may conduct any site-specific receiving water monitoring deemed appropriate by the Discharger and submit that monitoring data with this Characterization Monitoring. In general, monitoring data from samples collected in the immediate vicinity of the discharge will be given greater weight in permitting decisions than receiving water monitoring data collected at greater distances from the discharge point.</u>

IT IS HEREBY ORDERED THAT:

Waste Discharge Requirements Order R5-2013-0157 (NPDES No. CA0085260) is amended solely to address the Regional Monitoring Program in accordance with the Limitations and Discharge Requirements, section VI.C.1.g. **Effective immediately upon adoption**, Order R5-2013-0157 is amended as shown in Items 1-4 below.

1. **Limitations and Discharge Specifications.** Remove section VI.C.1.g, Reopener Provision for Regional Monitoring Program, and add the following text in section VII, Compliance Determination, as shown in underline format below:

   I. **Use of Delta Regional Monitoring Program and other Receiving Water Data to determine compliance with Receiving Water Limitations.** Delta Regional Monitoring Program data and other receiving water monitoring data that is not specifically required to be conducted by the Discharger under this permit, will not be used directly to determine that the discharge is in violation of this Permit. The Discharger may, however, conduct any site-specific receiving water monitoring deemed appropriate by the Discharger that is not conducted by the Delta RMP and submit that monitoring data. As described in Section VIII of Attachment E, such data may be used, if scientifically defensible, in conjunction with other receiving water data, effluent data, receiving water flow data, and other pertinent information to determine whether or not a discharge is in compliance with this Permit.

2. **Monitoring and Reporting Program.** Add the following text in section VIII, Receiving Water Monitoring Requirements, as shown in underline format below:

   VIII. RECEIVING WATER MONITORING REQUIREMENTS

   The Discharger shall implement the Receiving Water Monitoring Requirements in Attachment E, Sections VIII.A.1 and VIII.B.1 of this Order. However, in lieu of conducting the individual monitoring specified in Attachment E, Sections VIII.A.1 and VIII.B.1 of this Order the Discharger may elect to participate in the Delta Regional Monitoring Program.[1] The Discharger may choose to conduct all or part of the receiving water monitoring through the Delta Regional Monitoring Program. If the Discharger elects to cease all or part of the individual receiving water monitoring and instead participates in the Delta Regional Monitoring Program, the Discharger shall submit a letter signed by an authorized representative informing the Board that the Discharger will participate in the Delta Regional Monitoring Program, and the date on which individual receiving water monitoring required under Attachment E, Sections VIII.A.1 and VIII.B.1 will cease, or be modified, and specific monitoring locations and constituent combinations that will no longer be conducted individually. Written approval of the Discharger's request, by the Executive Officer, is required

[1] If the Discharger elects to participate in the Delta RMP, it shall continue to submit receiving water data for temperature. At minimum, one representative upstream receiving water temperature sample shall be submitted annually for the month of January. The temperature data shall be submitted in the January self-monitoring report and will be used to determine compliance with the temperature effluent limitation. Temperature data may be collected by the Discharger for this purpose or the Discharger may submit representative temperature data from the Delta RMP or other appropriate monitoring programs (e.g., Department of Water Resources, United States Geological Survey, etc.).

prior to discontinuing part or all of individual receiving water monitoring. Approval by the Executive Officer is not required prior to participating in the Delta Regional Monitoring Program.

If the Discharger participates in the Delta Regional Monitoring Program in lieu of conducting individual receiving water monitoring, the Discharger shall continue to participate in the Delta Regional Monitoring Program until such time as the Discharger informs the Board that participation in the Delta RMP will cease and individual monitoring is reinstituted. Receiving water monitoring under Attachment E, Sections VIII.A.1 and VIII.B.1, is not required under this Order so long as the Discharger adequately supports the Delta Regional Monitoring Program. If the Discharger fails to adequately support the Delta Regional Monitoring Program, as defined by the Delta RMP Steering Committee, the Discharger shall reinstitute individual receiving water monitoring under Attachment E, Sections VIII.A.1 and VIII.B.1, upon written notice from the Executive Officer. During participation in the Delta RMP, the Discharger may conduct and submit any or part of the receiving water monitoring included in this Monitoring and Reporting Program that is deemed appropriate by the Discharger.

Delta RMP data is not intended to be used directly to represent either upstream or downstream water quality for purposes of determining compliance with this Permit. Delta RMP monitoring stations are established generally as “integrator sites” to evaluate the combined impacts on water quality of multiple discharges into the Delta; Delta RMP monitoring stations would not normally be able to identify the source of any specific constituent, but would be used to identify water quality issues needing further evaluation. Delta RMP monitoring data, along with individual Discharger data, may be used to help establish background receiving water quality for Reasonable Potential analyses in an NPDES Permit after evaluation of the applicability of the data for that purpose. Delta RMP data, as with all environmental monitoring data, can provide an assessment of water quality at a specific place and time that can be used in conjunction with other information, such as other receiving water monitoring data, spatial and temporal distribution and trends of receiving water data, effluent data from the Discharger’s discharge and other point and non-point source discharges, receiving water flow volume, speed and direction, and other information to determine the likely source or sources of a constituent that resulted in exceedance of a receiving water quality objective.

During the period of participation in the Delta Regional Monitoring Program, the Discharger shall continue to report any individually conducted receiving water monitoring data in the Electronic Self-Monitoring Reports (eSMR) according to the Monitoring and Reporting Program. In addition, 1) with each submitted eSMR, the Discharger’s eSMR cover letter shall state that the Discharger is participating in the Delta Regional Monitoring Program in lieu of conducting the individual receiving water monitoring program required by the permit, and 2) with each annual report, the Discharger shall attach a copy of the letter originally submitted to the Central Valley Water Board describing the monitoring location(s) and constituent combinations that will no longer be conducted individually.

3. **Fact Sheet.** Remove section VI.B.1.e, Rationale for Reopener Provision for Regional Monitoring Program, and add section VII.D.1.e, Rationale for Monitoring and Reporting Requirements, as shown in underline format below:

D. Receiving Water Monitoring

1. Surface Water

a. Receiving water monitoring is necessary to assess compliance with receiving water limitations and to assess the impacts of the discharge on the receiving stream.

b. Order R5-2008-0057 required receiving water monitoring at four monitoring locations: Monitoring Location RSW-001 located approximately 7 miles upstream; Monitoring Location RSW-002 located 500 feet upstream; Monitoring Location RSW-003 located 500 feet downstream; and Monitoring Location RSW-004 located approximately 3 miles downstream at the Antioch Bridge. The San Joaquin River at the point of discharge is 3,300 feet wide, whereas the outfall extends approximately 550 feet into the San Joaquin River with the last 150 feet including the diffuser ports. Due to the large size of the San Joaquin River at the point of discharge, the significant dilution available, the high level of treatment, and the effluent limitations for pH, temperature, and oxygen demanding substances, (i.e., BOD5, TSS, and ammonia), this Order discontinues effluent monitoring requirements at Monitoring Locations RSW-002, RSW-003, and RSW-004, as they are not necessary to evaluate compliance with the receiving water limits and are most likely not effective at doing so.

c. In accordance with Section 1.3 of the SIP, periodic monitoring for priority pollutants for which criteria or objectives apply and for which no effluent limitations have been established is required. This Order requires monitoring for priority pollutants and other pollutants of concern quarterly during the third year of the permit term, performed concurrently with effluent monitoring, at Monitoring Location RSW-001 in order to collect data to conduct an RPA for the next permit renewal. See Attachment H for more detailed requirements related to performing priority pollutant monitoring.

d. This Order includes an effluent limitation for temperature which requires that the effluent temperature not exceed the natural receiving water temperature by more than 20°F. In order to characterize the natural receiving water temperature, this Order establishes a new monitoring location, defined as Monitoring Location RSW-002, located in the San Joaquin River at Jersey Point, approximately 1 mile upstream of Discharge Point 001. The Discharger may report results obtained from the San Joaquin River at Jersey Point at U.S. Bureau of Reclamation Station JER to satisfy this monitoring requirement.

e. <u>Delta Regional Monitoring Program</u>

<u>The Central Valley Water Board requires individual dischargers and discharger groups to conduct monitoring of Delta waters and Delta tributary waters in the vicinity of their discharge, known as ambient (or receiving) water quality monitoring. This monitoring provides information on the impacts of waste discharges on Delta waters, and on the extant condition of the Delta waters. However, the equivalent funds spent on current monitoring efforts could be used more efficiently and productively, and provide a better</u>

understanding of geographic and temporal distributions of contaminants and physical conditions in the Delta, and of other Delta water quality issues, if those funds were used for a coordinated ambient monitoring effort, rather than continue to be used in individual, uncoordinated ambient water quality monitoring programs. The Delta Regional Monitoring Program (RMP) will provide data to better inform management and policy decisions regarding the Delta.

This Order will allow Dischargers to elect to participate in the Delta RMP in lieu of conducting all or part of the individual receiving water monitoring required in the Monitoring and Reporting Program. If the Discharger elects to cease individual receiving water monitoring and participate in the Delta Regional Monitoring Program, the Discharger shall submit a letter signed by an authorized representative to the Executive Officer informing the Board that the Discharger will participate in the Delta Regional Monitoring Program and the date on which individual receiving water monitoring under Attachment E, Sections VIII.A.1 and VIII.B.1, will cease or be modified. Approval by the Executive Officer is required, and contingent on Delta RMP Steering Committee action on the forthcoming RMP monitoring plan.

Delta RMP data is not intended to be used directly to represent either upstream or downstream water quality for purposes of determining compliance with this Permit. Delta RMP monitoring stations are established generally as “integrator sites” to evaluate the combined impacts on water quality of multiple discharges into the Delta; Delta RMP monitoring stations would not normally be able to identify the source of any specific constituent, but would be used to identify water quality issues needing further evaluation. Delta RMP monitoring data may be used to help establish background receiving water quality for Reasonable Potential analyses in an NPDES Permit after evaluation of the applicability of the data for that purpose. In general, monitoring data from samples collected in the immediate vicinity of the discharge will be given greater weight in permitting decisions than receiving water monitoring data collected at greater distances from the discharge point. Delta RMP data, as with all environmental monitoring data, can provide an assessment of water quality at a specific place and time that can be used in conjunction with other information, such as other receiving water monitoring data, spatial and temporal distribution and trends of receiving water data, effluent data from the Discharger’s discharge and other point and non-point source discharges, receiving water flow volume, speed and direction, and other information to determine the likely source or sources of a constituent that resulted in exceedance of a receiving water quality objective.

If the Discharger begins to participate in the Delta Regional Monitoring Program in lieu of individual receiving water monitoring, the Discharger shall continue to participate in the Delta Regional Monitoring Program until such time as the Discharger informs the Board that participation in the Delta RMP will cease and individual monitoring is reinstituted. Receiving water monitoring under Attachment E, Sections VIII.A.1 and VIII.B.1, is not required under this Order so long as the Discharger adequately supports the Delta Regional Monitoring Program. Participation in the Delta RMP by a Discharger shall consist of providing funds and/or in-kind services to the Delta RMP at least equivalent to discontinued individual monitoring and study efforts. If a discharger or discharger group fails to maintain adequate participation in the Delta RMP, as determined through criteria to be developed by the Delta RMP Steering Committee, the Steering Committee will

recommend to the Central Valley Water Board that an individual monitoring program be reinstated for that discharger or discharger group.

If the Discharger is participating in the Delta Regional Monitoring Program as described in Attachment E, Section VIII, the Receiving Water portion of the required Characterization Study need not be conducted by the Discharger. Instead, data from the Delta Regional Monitoring Program will be utilized to characterize the receiving water in the permit renewal. The Discharger may, however, conduct any site-specific receiving water monitoring deemed appropriate by the Discharger and submit that monitoring data with this Characterization Study. In general, monitoring data from samples collected in the immediate vicinity of the discharge will be given greater weight in permitting decisions than receiving water monitoring data collected at greater distances from the discharge point. Historic receiving water monitoring data taken by the discharger and from other sources may also be evaluated to determine whether or not that data is representative of current receiving water conditions. If found to be representative of current conditions, then that historic data may be used in characterizing receiving water quality for the purposes of Reasonable Potential analysis.

4. **Effluent and Receiving Water Characterization Study (Attachment H).** Add language to section II, Monitoring Requirements, as shown in underline format below:

II. Monitoring Requirements

If the Discharger is participating in the Delta Regional Monitoring Program as described in Attachment E, Section VIII, the Receiving Water portion of this Characterization Study is not required. However, the Report of Waste Discharge for the next permit renewal shall include, at minimum, one representative ambient background characterization monitoring event for priority pollutant constituents during the term of the permit. Data from the Delta Regional Monitoring Program plus any receiving water characterization conducted by the Discharger will be utilized to characterize the receiving water in the permit renewal. The Discharger may request that the RMP perform sampling and laboratory analysis to address all or a portion of the monitoring under this Characterization Monitoring with the understanding that the Discharger will provide funding to the RMP sufficient to reimburse all of the costs of this additional effort. Alternatively, the Discharger may conduct any site-specific receiving water monitoring deemed appropriate by the Discharger and submit that monitoring data with this Characterization Monitoring. In general, monitoring data from samples collected in the immediate vicinity of the discharge will be given greater weight in permitting decisions than receiving water monitoring data collected at greater distances from the discharge point.

IT IS HEREBY ORDERED THAT:

Waste Discharge Requirements Order R5-2013-0106 (NPDES No. CA0082660) is amended solely to address the Regional Monitoring Program in accordance with the Limitations and Discharge Requirements, section VI.C.1.i. **Effective immediately upon adoption**, Order R5-2013-0106 is amended as shown in Items 1-5 below.

1. **Limitations and Discharge Specifications.** Remove section VI.C.1.i, Reopener Provision for Regional Monitoring Program, and add the following text in section VII, Compliance Determination, as shown in underline format below:

   J. Use of Delta Regional Monitoring Program and other Receiving Water Data to determine compliance with Receiving Water Limitations. Delta Regional Monitoring Program data and other receiving water monitoring data that is not specifically required to be conducted by the Discharger under this permit, will not be used directly to determine that the discharge is in violation of this Permit. The Discharger may, however, conduct any site-specific receiving water monitoring deemed appropriate by the Discharger that is not conducted by the Delta RMP and submit that monitoring data. As described in Section VIII of Attachment E, such data may be used, if scientifically defensible, in conjunction with other receiving water data, effluent data, receiving water flow data, and other pertinent information to determine whether or not a discharge is in compliance with this Permit.

2. **Monitoring and Reporting Program.** Add the following text in section VIII, Receiving Water Monitoring Requirements – Surface Water and Groundwater, as shown in underline format below:

   VIII. RECEIVING WATER MONITORING REQUIREMENTS – SURFACE WATER AND GROUNDWATER

   The Discharger shall implement the Receiving Water Monitoring Requirements in Attachment E, Section VIII.A.1 of this Order. However, in lieu of conducting the individual monitoring specified in Attachment E, Section VIII.A.1 of this Order the Discharger may elect to participate in the Delta Regional Monitoring Program.[1] The Discharger may choose to conduct all or part of the receiving water monitoring through the Delta Regional Monitoring Program. If the Discharger elects to cease all or part of the individual receiving water monitoring and instead participates in the Delta Regional Monitoring Program, the Discharger shall submit a letter signed by an authorized representative informing the Board that the Discharger will participate in the Delta Regional Monitoring Program, and the date on which individual receiving water monitoring required under Attachment E, Section VIII.A.1 will cease, or be modified, and specific monitoring locations and constituent combinations that will no longer be conducted individually. Written approval of the Discharger's request, by the

[1] If the Discharger elects to participate in the Delta RMP, it shall continue to submit receiving water data for temperature. At minimum, one representative upstream receiving water temperature sample shall be submitted annually for the month of January. The temperature data shall be submitted in the January self-monitoring report and will be used to determine compliance with the temperature effluent limitation. Temperature data may be collected by the Discharger for this purpose or the Discharger may submit representative temperature data from the Delta RMP or other appropriate monitoring programs (e.g., Department of Water Resources, United States Geological Survey, etc.).

Executive Officer, is required prior to discontinuing part or all of individual receiving water monitoring. Approval by the Executive Officer is not required prior to participating in the Delta Regional Monitoring Program.

If the Discharger participates in the Delta Regional Monitoring Program in lieu of conducting individual receiving water monitoring, the Discharger shall continue to participate in the Delta Regional Monitoring Program until such time as the Discharger informs the Board that participation in the Delta RMP will cease and individual monitoring is reinstituted. Receiving water monitoring under Attachment E, Section VIII.A.1, is not required under this Order so long as the Discharger adequately supports the Delta Regional Monitoring Program. If the Discharger fails to adequately support the Delta Regional Monitoring Program, as defined by the Delta RMP Steering Committee, the Discharger shall reinstitute individual receiving water monitoring under Attachment E, Section VIII.A.1, upon written notice from the Executive Officer. During participation in the Delta RMP, the Discharger may conduct and submit any or part of the receiving water monitoring included in this Monitoring and Reporting Program that is deemed appropriate by the Discharger.

Delta RMP data is not intended to be used directly to represent either upstream or downstream water quality for purposes of determining compliance with this Permit. Delta RMP monitoring stations are established generally as “integrator sites” to evaluate the combined impacts on water quality of multiple discharges into the Delta; Delta RMP monitoring stations would not normally be able to identify the source of any specific constituent, but would be used to identify water quality issues needing further evaluation. Delta RMP monitoring data, along with individual Discharger data, may be used to help establish background receiving water quality for Reasonable Potential analyses in an NPDES Permit after evaluation of the applicability of the data for that purpose. Delta RMP data, as with all environmental monitoring data, can provide an assessment of water quality at a specific place and time that can be used in conjunction with other information, such as other receiving water monitoring data, spatial and temporal distribution and trends of receiving water data, effluent data from the Discharger’s discharge and other point and non-point source discharges, receiving water flow volume, speed and direction, and other information to determine the likely source or sources of a constituent that resulted in exceedance of a receiving water quality objective.

During the period of participation in the Delta Regional Monitoring Program, the Discharger shall continue to report any individually conducted receiving water monitoring data in the Electronic Self-Monitoring Reports (eSMR) according to the Monitoring and Reporting Program. In addition, 1) with each submitted eSMR, the Discharger’s eSMR cover letter shall state that the Discharger is participating in the Delta Regional Monitoring Program in lieu of conducting the individual receiving water monitoring program required by the permit, and 2) with each annual report, the Discharger shall attach a copy of the letter originally submitted to the Central Valley Water Board describing the monitoring location(s) and constituent combinations that will no longer be conducted individually.

3. **Monitoring and Reporting Program.** Add text in section X.D.4, Effluent and Receiving Water Characterization Study, as shown in underline format below:

   4. Effluent and Receiving Water Characterization Study. An effluent and receiving water monitoring study is required to ensure adequate information is available for the permit renewal. During the third or fourth year of this permit term, the Discharger shall conduct quarterly monitoring of the effluent at EFF-001 and of the receiving water at RSW-001 for all priority pollutants and other constituents of concern as described in Attachment I. ~~The report shall be completed in conformance with the following schedule.~~

   If the Discharger is participating in the Delta Regional Monitoring Program as described in Attachment E, Section VIII, the Receiving Water portion of this Characterization Study is not required. However, the Report of Waste Discharge for the next permit renewal shall include, at minimum, one representative ambient background characterization monitoring event for priority pollutant constituents during the term of the permit. Data from the Delta Regional Monitoring Program may be utilized to characterize the receiving water in the permit renewal. The Discharger may request that the RMP perform sampling and laboratory analysis to address all or a portion of the monitoring under this Characterization study with the understanding that the Discharger will provide funding to the RMP sufficient to reimburse all of the costs of this additional effort. Alternatively, the Discharger may conduct any site-specific receiving water monitoring deemed appropriate by the Discharger and submit that monitoring data with this Characterization Study. In general, monitoring data from samples collected in the immediate vicinity of the discharge will be given greater weight in permitting decisions than receiving water monitoring data collected at greater distances from the discharge point.

   The report shall be completed in conformance with the following schedule.

4. **Fact Sheet.** Add section VI.D.1.b, Rationale for Monitoring and Reporting Requirements, as shown in underline format below:

   D. Receiving Water Monitoring

   1. Surface Water

   a. Weekly receiving water monitoring frequencies and sample types for dissolved oxygen, electrical conductivity, pH, temperature, turbidity, hardness, and quarterly during the third year for priority pollutants have been retained from Order R5 2008 0006 01 to assess compliance with receiving water limitations and to assess the impacts of the discharge on the receiving stream.

   b. Delta Regional Monitoring Program

   The Central Valley Water Board requires individual dischargers and discharger groups to conduct monitoring of Delta waters and Delta tributary waters in the vicinity of their discharge, known as ambient (or receiving) water quality monitoring. This monitoring provides information on the impacts of waste discharges on Delta waters, and on the extant condition of the Delta waters. However, the equivalent funds spent on current monitoring efforts could be used more efficiently and productively, and provide a better understanding of geographic and temporal distributions of contaminants and physical conditions in the Delta, and of other Delta water quality issues, if those funds were used

for a coordinated ambient monitoring effort, rather than continue to be used in individual, uncoordinated ambient water quality monitoring programs. The Delta Regional Monitoring Program (RMP) will provide data to better inform management and policy decisions regarding the Delta.

This Order will allow Dischargers to elect to participate in the Delta RMP in lieu of conducting all or part of the individual receiving water monitoring required in the Monitoring and Reporting Program. If the Discharger elects to cease individual receiving water monitoring and participate in the Delta Regional Monitoring Program, the Discharger shall submit a letter signed by an authorized representative to the Executive Officer informing the Board that the Discharger will participate in the Delta Regional Monitoring Program and the date on which individual receiving water monitoring under Attachment E, Section VIII.A.1, will cease or be modified. Approval by the Executive Officer is required, and contingent on Delta RMP Steering Committee action on the forthcoming RMP monitoring plan.

Delta RMP data is not intended to be used directly to represent either upstream or downstream water quality for purposes of determining compliance with this Permit. Delta RMP monitoring stations are established generally as “integrator sites” to evaluate the combined impacts on water quality of multiple discharges into the Delta; Delta RMP monitoring stations would not normally be able to identify the source of any specific constituent, but would be used to identify water quality issues needing further evaluation. Delta RMP monitoring data may be used to help establish background receiving water quality for Reasonable Potential analyses in an NPDES Permit after evaluation of the applicability of the data for that purpose. In general, monitoring data from samples collected in the immediate vicinity of the discharge will be given greater weight in permitting decisions than receiving water monitoring data collected at greater distances from the discharge point. Delta RMP data, as with all environmental monitoring data, can provide an assessment of water quality at a specific place and time that can be used in conjunction with other information, such as other receiving water monitoring data, spatial and temporal distribution and trends of receiving water data, effluent data from the Discharger’s discharge and other point and non-point source discharges, receiving water flow volume, speed and direction, and other information to determine the likely source or sources of a constituent that resulted in exceedance of a receiving water quality objective.

If the Discharger begins to participate in the Delta Regional Monitoring Program in lieu of individual receiving water monitoring, the Discharger shall continue to participate in the Delta Regional Monitoring Program until such time as the Discharger informs the Board that participation in the Delta RMP will cease and individual monitoring is reinstituted. Receiving water monitoring under Attachment E, Section VIII.A.1, is not required under this Order so long as the Discharger adequately supports the Delta Regional Monitoring Program. Participation in the Delta RMP by a Discharger shall consist of providing funds and/or in-kind services to the Delta RMP at least equivalent to discontinued individual monitoring and study efforts. If a discharger or discharger group fails to maintain adequate participation in the Delta RMP, as determined through criteria to be developed by the Delta RMP Steering Committee, the Steering Committee will recommend to the Central Valley Water Board that an individual monitoring program be reinstated for that discharger or discharger group.

If the Discharger is participating in the Delta Regional Monitoring Program as described in Attachment E, Section VIII, the Receiving Water portion of the required Characterization Study need not be conducted by the Discharger. Instead, data from the Delta Regional Monitoring Program will be utilized to characterize the receiving water in the permit renewal. The Discharger may, however, conduct any site-specific receiving water monitoring deemed appropriate by the Discharger and submit that monitoring data with this Characterization Study. In general, monitoring data from samples collected in the immediate vicinity of the discharge will be given greater weight in permitting decisions than receiving water monitoring data collected at greater distances from the discharge point. Historic receiving water monitoring data taken by the discharger and from other sources may also be evaluated to determine whether or not that data is representative of current receiving water conditions. If found to be representative of current conditions, then that historic data may be used in characterizing receiving water quality for the purposes of Reasonable Potential analysis.

5. **Effluent and Receiving Water Characterization Study (Attachment I).** Add language to section II, Monitoring Requirements, as shown in underline format below:

II. Monitoring Requirements

If the Discharger is participating in the Delta Regional Monitoring Program as described in Attachment E, Section VIII, the Receiving Water portion of this Characterization Study is not required. However, the Report of Waste Discharge for the next permit renewal shall include, at minimum, one representative ambient background characterization monitoring event for priority pollutant constituents during the term of the permit. Data from the Delta Regional Monitoring Program plus any receiving water characterization conducted by the Discharger will be utilized to characterize the receiving water in the permit renewal. The Discharger may request that the RMP perform sampling and laboratory analysis to address all or a portion of the monitoring under this Characterization Monitoring with the understanding that the Discharger will provide funding to the RMP sufficient to reimburse all of the costs of this additional effort. Alternatively, the Discharger may conduct any site-specific receiving water monitoring deemed appropriate by the Discharger and submit that monitoring data with this Characterization Monitoring. In general, monitoring data from samples collected in the immediate vicinity of the discharge will be given greater weight in permitting decisions than receiving water monitoring data collected at greater distances from the discharge point.

IT IS HEREBY ORDERED THAT:

Waste Discharge Requirements Order R5-2014-0073 (NPDES No. CA0078590) is amended solely to address the Regional Monitoring Program in accordance with the Limitations and Discharge Requirements, section VI.C.1.g. **Effective immediately upon adoption**, Order R5-2014-0073 is amended as shown in Items 1-4 below.

1. **Limitations and Discharge Specifications.** Remove section VI.C.1.g, Reopener Provision for Regional Monitoring Program, and add the following text in section VII, Compliance Determination, as shown in underline format below:

   I. **Use of Delta Regional Monitoring Program and other Receiving Water Data to determine compliance with Receiving Water Limitations.** Delta Regional Monitoring Program data and other receiving water monitoring data that is not specifically required to be conducted by the Discharger under this permit, will not be used directly to determine that the discharge is in violation of this Permit. The Discharger may, however, conduct any site-specific receiving water monitoring deemed appropriate by the Discharger that is not conducted by the Delta RMP and submit that monitoring data. As described in Section VIII of Attachment E, such data may be used, if scientifically defensible, in conjunction with other receiving water data, effluent data, receiving water flow data, and other pertinent information to determine whether or not a discharge is in compliance with this Permit.

2. **Monitoring and Reporting Program.** Add the following text in section VIII, Receiving Water Monitoring Requirements, as shown in underline format below:

   VIII. RECEIVING WATER MONITORING REQUIREMENTS

   The Discharger shall implement the Receiving Water Monitoring Requirements in Attachment E, Sections VIII.A.1 and VIII.A.2 of this Order. However, in lieu of conducting the individual monitoring specified in Attachment E, Sections VIII.A.1 and VIII.A.2 of this Order (including visual observations) the Discharger may elect to participate in the Delta Regional Monitoring Program.[1] The Discharger may choose to conduct all or part of the receiving water monitoring through the Delta Regional Monitoring Program. If the Discharger elects to cease all or part of the individual receiving water monitoring and instead participates in the Delta Regional Monitoring Program, the Discharger shall submit a letter signed by an authorized representative informing the Board that the Discharger will participate in the Delta Regional Monitoring Program, and the date on which individual receiving water monitoring required under Attachment E, Sections VIII.A.1 and VIII.A.2 will cease, or be modified, and specific monitoring locations and constituent combinations that will no longer be conducted individually. Written approval of the Discharger's request, by the Executive Officer, is required

[1] If the Discharger elects to participate in the Delta RMP, it shall continue to submit receiving water data for temperature. At minimum, one representative upstream receiving water temperature sample shall be submitted annually for the month of January. The temperature data shall be submitted in the January self-monitoring report and will be used to determine compliance with the temperature effluent limitation. Temperature data may be collected by the Discharger for this purpose or the Discharger may submit representative temperature data from the Delta RMP or other appropriate monitoring programs (e.g., Department of Water Resources, United States Geological Survey, etc.).

prior to discontinuing part or all of individual receiving water monitoring. Approval by the Executive Officer is not required prior to participating in the Delta Regional Monitoring Program.

If the Discharger participates in the Delta Regional Monitoring Program in lieu of conducting individual receiving water monitoring, the Discharger shall continue to participate in the Delta Regional Monitoring Program until such time as the Discharger informs the Board that participation in the Delta RMP will cease and individual monitoring is reinstituted. Receiving water monitoring under Attachment E, Sections VIII.A.1 and VIII.A.2, is not required under this Order so long as the Discharger adequately supports the Delta Regional Monitoring Program. If the Discharger fails to adequately support the Delta Regional Monitoring Program, as defined by the Delta RMP Steering Committee, the Discharger shall reinstitute individual receiving water monitoring under Attachment E, Sections VIII.A.1 and VIII.A.2, upon written notice from the Executive Officer. During participation in the Delta RMP, the Discharger may conduct and submit any or part of the receiving water monitoring included in this Monitoring and Reporting Program that is deemed appropriate by the Discharger.

Delta RMP data is not intended to be used directly to represent either upstream or downstream water quality for purposes of determining compliance with this Permit. Delta RMP monitoring stations are established generally as “integrator sites” to evaluate the combined impacts on water quality of multiple discharges into the Delta; Delta RMP monitoring stations would not normally be able to identify the source of any specific constituent, but would be used to identify water quality issues needing further evaluation. Delta RMP monitoring data, along with individual Discharger data, may be used to help establish background receiving water quality for Reasonable Potential analyses in an NPDES Permit after evaluation of the applicability of the data for that purpose. Delta RMP data, as with all environmental monitoring data, can provide an assessment of water quality at a specific place and time that can be used in conjunction with other information, such as other receiving water monitoring data, spatial and temporal distribution and trends of receiving water data, effluent data from the Discharger’s discharge and other point and non-point source discharges, receiving water flow volume, speed and direction, and other information to determine the likely source or sources of a constituent that resulted in exceedance of a receiving water quality objective.

During the period of participation in the Delta Regional Monitoring Program, the Discharger shall continue to report any individually conducted receiving water monitoring data in the Electronic Self-Monitoring Reports (eSMR) according to the Monitoring and Reporting Program. In addition, 1) with each submitted eSMR, the Discharger’s eSMR cover letter shall state that the Discharger is participating in the Delta Regional Monitoring Program in lieu of conducting the individual receiving water monitoring program required by the permit, and 2) with each annual report, the Discharger shall attach a copy of the letter originally submitted to the Central Valley Water Board describing the monitoring location(s) and constituent combinations that will no longer be conducted individually.

3. **Monitoring and Reporting Program.** Add text in section IX.D, Effluent and Receiving Water Characterization, as shown in underline format below:

D. Effluent and Receiving Water Characterization

<u>If the Discharger is participating in the Delta Regional Monitoring Program as described in Attachment E, Section VIII, the Receiving Water portion of this Characterization Monitoring is not required. However, the Report of Waste Discharge for the next permit renewal shall include, at minimum, one representative ambient background characterization monitoring event for priority pollutant constituents during the term of the permit. Data from the Delta Regional Monitoring Program may be utilized to characterize the receiving water in the permit renewal. The Discharger may request that the RMP perform sampling and laboratory analysis to address all or a portion of the monitoring under this Characterization Monitoring with the understanding that the Discharger will provide funding to the RMP sufficient to reimburse all of the costs of this additional effort. Alternatively, the Discharger may conduct any site-specific receiving water monitoring deemed appropriate by the Discharger and submit that monitoring data with this Characterization Monitoring. In general, monitoring data from samples collected in the immediate vicinity of the discharge will be given greater weight in permitting decisions than receiving water monitoring data collected at greater distances from the discharge point.</u>

4. **Fact Sheet.** Remove section VI.B.1.e, Rationale for Reopener Provision for Regional Monitoring Program, and add section VII.D.1.g, Rationale for Monitoring and Reporting Requirements, as shown in underline format below:

D. Receiving Water Monitoring

1. Surface Water

a. Receiving water monitoring is necessary to assess compliance with receiving water limitations and to assess the impacts of the discharge on the receiving stream.

b. The receiving water monitoring frequency and sample type for hardness (monthly), and fecal coliform organisms (quarterly) have been retained from Order R5-2008-0179-01.

c. Order R5-2008-0179-01 required monthly monitoring for pH, dissolved oxygen, temperature, and turbidity. This Order continues this monitoring frequency.

d. Order R5-2008-0179-01 required monitoring for chloride, electrical conductivity, and total dissolved solids twice per month. As discussed in section IV.C.3.a of this Fact Sheet, the discharge does not exhibit reasonable potential to cause or contribute to an exceedance of the water quality objectives for salinity. Therefore, this Order reduces the receiving water monitoring frequency for these parameters to monthly.

e. This Order establishes quarterly receiving water monitoring for copper and nitrate and twice per month for ammonia to determine assimilative capacity and assess the impacts of the discharge on the receiving water.

f. In accordance with Section 1.3 of the SIP, periodic monitoring for priority pollutants for which criteria or objectives apply and for which no effluent limitations have been established. This Order requires monitoring for priority pollutants and other pollutants

of concern at Monitoring Location RSW-001 quarterly during the third year of the permit term, concurrent with effluent monitoring, in order to collect data to conduct an RPA for the next permit renewal. See Attachment E, Section IX.D for more detailed requirements related to performing priority pollutant monitoring.

g. Delta Regional Monitoring Program

The Central Valley Water Board requires individual dischargers and discharger groups to conduct monitoring of Delta waters and Delta tributary waters in the vicinity of their discharge, known as ambient (or receiving) water quality monitoring. This monitoring provides information on the impacts of waste discharges on Delta waters, and on the extant condition of the Delta waters. However, the equivalent funds spent on current monitoring efforts could be used more efficiently and productively, and provide a better understanding of geographic and temporal distributions of contaminants and physical conditions in the Delta, and of other Delta water quality issues, if those funds were used for a coordinated ambient monitoring effort, rather than continue to be used in individual, uncoordinated ambient water quality monitoring programs. The Delta Regional Monitoring Program (RMP) will provide data to better inform management and policy decisions regarding the Delta.

This Order will allow Dischargers to elect to participate in the Delta RMP in lieu of conducting all or part of the individual receiving water monitoring required in the Monitoring and Reporting Program. If the Discharger elects to cease individual receiving water monitoring and participate in the Delta Regional Monitoring Program, the Discharger shall submit a letter signed by an authorized representative to the Executive Officer informing the Board that the Discharger will participate in the Delta Regional Monitoring Program and the date on which individual receiving water monitoring under Attachment E, Sections VIII.A.1 and VIII.A.2, will cease or be modified. Approval by the Executive Officer is - required, and contingent on Delta RMP Steering Committee action on the forthcoming RMP monitoring plan.

Delta RMP data is not intended to be used directly to represent either upstream or downstream water quality for purposes of determining compliance with this Permit. Delta RMP monitoring stations are established generally as “integrator sites” to evaluate the combined impacts on water quality of multiple discharges into the Delta; Delta RMP monitoring stations would not normally be able to identify the source of any specific constituent, but would be used to identify water quality issues needing further evaluation. Delta RMP monitoring data may be used to help establish background receiving water quality for Reasonable Potential analyses in an NPDES Permit after evaluation of the applicability of the data for that purpose. In general, monitoring data from samples collected in the immediate vicinity of the discharge will be given greater weight in permitting decisions than receiving water monitoring data collected at greater distances from the discharge point. Delta RMP data, as with all environmental monitoring data, can provide an assessment of water quality at a specific place and time that can be used in conjunction with other information, such as other receiving water monitoring data, spatial and temporal distribution and trends of receiving water data, effluent data from the Discharger’s discharge and other point and non-point source discharges, receiving water flow volume, speed and direction,

and other information to determine the likely source or sources of a constituent that resulted in exceedance of a receiving water quality objective.

If the Discharger begins to participate in the Delta Regional Monitoring Program in lieu of individual receiving water monitoring, the Discharger shall continue to participate in the Delta Regional Monitoring Program until such time as the Discharger informs the Board that participation in the Delta RMP will cease and individual monitoring is reinstituted. Receiving water monitoring under Attachment E, Sections VIII.A.1 and VIII.A.2, is not required under this Order so long as the Discharger adequately supports the Delta Regional Monitoring Program. Participation in the Delta RMP by a Discharger shall consist of providing funds and/or in-kind services to the Delta RMP at least equivalent to discontinued individual monitoring and study efforts. If a discharger or discharger group fails to maintain adequate participation in the Delta RMP, as determined through criteria to be developed by the Delta RMP Steering Committee, the Steering Committee will recommend to the Central Valley Water Board that an individual monitoring program be reinstated for that discharger or discharger group.

If the Discharger is participating in the Delta Regional Monitoring Program as described in Attachment E, Section VIII, the Receiving Water portion of the required Characterization Monitoring need not be conducted by the Discharger. Instead, data from the Delta Regional Monitoring Program will be utilized to characterize the receiving water in the permit renewal. The Discharger may, however, conduct any site-specific receiving water monitoring deemed appropriate by the Discharger and submit that monitoring data with this Characterization Monitoring. In general, monitoring data from samples collected in the immediate vicinity of the discharge will be given greater weight in permitting decisions than receiving water monitoring data collected at greater distances from the discharge point. Historic receiving water monitoring data taken by the discharger and from other sources may also be evaluated to determine whether or not that data is representative of current receiving water conditions. If found to be representative of current conditions, then that historic data may be used in characterizing receiving water quality for the purposes of Reasonable Potential analysis.

IT IS HEREBY ORDERED THAT:

Waste Discharge Requirements Order R5-2014-0012 (NPDES No. CA0079588) is amended solely to address the Regional Monitoring Program in accordance with the Limitations and Discharge Requirements, section VI.C.1.g. **Effective immediately upon adoption**, Order R5-2014-0012 is amended as shown in Items 1-4 below.

1. **Limitations and Discharge Specifications.** Remove section VI.C.1.g, Reopener Provision for Regional Monitoring Program, and add the following text in section VII, Compliance Determination, as shown in underline format below:

   I. **Use of Delta Regional Monitoring Program and other Receiving Water Data to determine compliance with Receiving Water Limitations.** Delta Regional Monitoring Program data and other receiving water monitoring data that is not specifically required to be conducted by the Discharger under this permit, will not be used directly to determine that the discharge is in violation of this Permit. The Discharger may, however, conduct any site-specific receiving water monitoring deemed appropriate by the Discharger that is not conducted by the Delta RMP and submit that monitoring data. As described in Section VIII of Attachment E, such data may be used, if scientifically defensible, in conjunction with other receiving water data, effluent data, receiving water flow data, and other pertinent information to determine whether or not a discharge is in compliance with this Permit.

2. **Monitoring and Reporting Program.** Add the following text in section VIII, Receiving Water Monitoring Requirements, as shown in underline format below:

   VIII. RECEIVING WATER MONITORING REQUIREMENTS

   The Discharger shall implement the Receiving Water Monitoring Requirements in Attachment E, Sections VIII.A.1 and VIII.B.1 of this Order. However, in lieu of conducting the individual monitoring specified in Attachment E, Sections VIII.A.1 and VIII.B.1, of this Order the Discharger may elect to participate in the Delta Regional Monitoring Program.[1] The Discharger may choose to conduct all or part of the receiving water monitoring through the Delta Regional Monitoring Program. If the Discharger elects to cease all or part of the individual receiving water monitoring and instead participates in the Delta Regional Monitoring Program, the Discharger shall submit a letter signed by an authorized representative informing the Board that the Discharger will participate in the Delta Regional Monitoring Program, and the date on which individual receiving water monitoring required under Attachment E, Sections VIII.A.1 and VIII.B.1 will cease, or be modified, and specific monitoring locations and constituent combinations that will no longer be conducted individually. Written approval of the Discharger's request, by the Executive Officer, is required prior to discontinuing part or all of individual receiving water monitoring. Approval by the

[1] If the Discharger elects to participate in the Delta RMP, it shall continue to submit receiving water data for temperature. At minimum, one representative upstream receiving water temperature sample shall be submitted annually for the month of January. The temperature data shall be submitted in the January self-monitoring report and will be used to determine compliance with the temperature effluent limitation. Temperature data may be collected by the Discharger for this purpose or the Discharger may submit representative temperature data from the Delta RMP or other appropriate monitoring programs (e.g., Department of Water Resources, United States Geological Survey, etc.).

Executive Officer is not required prior to participating in the Delta Regional Monitoring Program.

If the Discharger participates in the Delta Regional Monitoring Program in lieu of conducting individual receiving water monitoring, the Discharger shall continue to participate in the Delta Regional Monitoring Program until such time as the Discharger informs the Board that participation in the Delta RMP will cease and individual monitoring is reinstituted. Receiving water monitoring under Attachment E, Sections VIII.A.1 and VIII.B.1, is not required under this Order so long as the Discharger adequately supports the Delta Regional Monitoring Program. If the Discharger fails to adequately support the Delta Regional Monitoring Program, as defined by the Delta RMP Steering Committee, the Discharger shall reinstitute individual receiving water monitoring under Attachment E, Sections VIII.A.1 and VIII.B.1, upon written notice from the Executive Officer. During participation in the Delta RMP, the Discharger may conduct and submit any or part of the receiving water monitoring included in this Monitoring and Reporting Program that is deemed appropriate by the Discharger.

Delta RMP data is not intended to be used directly to represent either upstream or downstream water quality for purposes of determining compliance with this Permit. Delta RMP monitoring stations are established generally as "integrator sites" to evaluate the combined impacts on water quality of multiple discharges into the Delta; Delta RMP monitoring stations would not normally be able to identify the source of any specific constituent, but would be used to identify water quality issues needing further evaluation. Delta RMP monitoring data, along with individual Discharger data, may be used to help establish background receiving water quality for Reasonable Potential analyses in an NPDES Permit after evaluation of the applicability of the data for that purpose. Delta RMP data, as with all environmental monitoring data, can provide an assessment of water quality at a specific place and time that can be used in conjunction with other information, such as other receiving water monitoring data, spatial and temporal distribution and trends of receiving water data, effluent data from the Discharger's discharge and other point and non-point source discharges, receiving water flow volume, speed and direction, and other information to determine the likely source or sources of a constituent that resulted in exceedance of a receiving water quality objective.

During the period of participation in the Delta Regional Monitoring Program, the Discharger shall continue to report any individually conducted receiving water monitoring data in the Electronic Self-Monitoring Reports (eSMR) according to the Monitoring and Reporting Program. In addition, 1) with each submitted eSMR, the Discharger's eSMR cover letter shall state that the Discharger is participating in the Delta Regional Monitoring Program in lieu of conducting the individual receiving water monitoring program required by the permit, and 2) with each annual report, the Discharger shall attach a copy of the letter originally submitted to the Central Valley Water Board describing the monitoring location(s) and constituent combinations that will no longer be conducted individually.

3. **Fact Sheet.** Remove section VI.B.1.e, Rationale for Reopener Provision for Regional Monitoring Program, and add section VII.D.1.e, Rationale for Monitoring and Reporting Requirements, as shown in underline format below:

D. Receiving Water Monitoring

1. Surface Water

a. Receiving water monitoring is necessary to assess compliance with receiving water limitations and to assess the impacts of the discharge on the receiving stream.

b. The receiving water monitoring frequency and sample type for dissolved oxygen (quarterly), pH (quarterly), electrical conductivity (quarterly), temperature (quarterly), total dissolved solids (quarterly), and turbidity (quarterly) at Monitoring Locations RSW-002 and RSW-003 have been retained from Order R5-2008-0108-01.

c. This Order establishes monthly monitoring for hardness to ensure that adequate data is available to properly adjust water quality criteria for hardness-based metals.

d. In accordance with Section 1.3 of the SIP, periodic monitoring for priority pollutants for which criteria or objectives apply and for which no effluent limitations have been established is required. This Order requires monitoring for priority pollutants and other pollutants of concern quarterly during the third year of the permit term, performed concurrently with effluent monitoring, at Monitoring Location RSW-001 in order to collect data to conduct an RPA for the next permit renewal. See Attachment H for more detailed requirements related to performing priority pollutant monitoring.

e. Delta Regional Monitoring Program

The Central Valley Water Board requires individual dischargers and discharger groups to conduct monitoring of Delta waters and Delta tributary waters in the vicinity of their discharge, known as ambient (or receiving) water quality monitoring. This monitoring provides information on the impacts of waste discharges on Delta waters, and on the extant condition of the Delta waters. However, the equivalent funds spent on current monitoring efforts could be used more efficiently and productively, and provide a better understanding of geographic and temporal distributions of contaminants and physical conditions in the Delta, and of other Delta water quality issues, if those funds were used for a coordinated ambient monitoring effort, rather than continue to be used in individual, uncoordinated ambient water quality monitoring programs. The Delta Regional Monitoring Program (RMP) will provide data to better inform management and policy decisions regarding the Delta.

This Order will allow Dischargers to elect to participate in the Delta RMP in lieu of conducting all or part of the individual receiving water monitoring required in the Monitoring and Reporting Program. If the Discharger elects to cease individual receiving water monitoring and participate in the Delta Regional Monitoring Program, the Discharger shall submit a letter signed by an authorized representative to the Executive Officer informing the Board that the Discharger will participate in the Delta Regional Monitoring Program and the date on which individual receiving water monitoring under Attachment E, Sections VIII.A.1 and VIII.B.1, will cease or be modified. Approval by the Executive Officer is required, and contingent on Delta RMP Steering Committee action on the forthcoming RMP monitoring plan.

Delta RMP data is not intended to be used directly to represent either upstream or downstream water quality for purposes of determining compliance with this Permit. Delta RMP monitoring stations are established generally as "integrator sites" to evaluate the combined impacts on water quality of multiple discharges into the Delta; Delta RMP monitoring stations would not normally be able to identify the source of any specific constituent, but would be used to identify water quality issues needing further evaluation. Delta RMP monitoring data may be used to help establish background receiving water quality for Reasonable Potential analyses in an NPDES Permit after evaluation of the applicability of the data for that purpose. In general, monitoring data from samples collected in the immediate vicinity of the discharge will be given greater weight in permitting decisions than receiving water monitoring data collected at greater distances from the discharge point. Delta RMP data, as with all environmental monitoring data, can provide an assessment of water quality at a specific place and time that can be used in conjunction with other information, such as other receiving water monitoring data, spatial and temporal distribution and trends of receiving water data, effluent data from the Discharger's discharge and other point and non-point source discharges, receiving water flow volume, speed and direction, and other information to determine the likely source or sources of a constituent that resulted in exceedance of a receiving water quality objective.

If the Discharger begins to participate in the Delta Regional Monitoring Program in lieu of individual receiving water monitoring, the Discharger shall continue to participate in the Delta Regional Monitoring Program until such time as the Discharger informs the Board that participation in the Delta RMP will cease and individual monitoring is reinstituted. Receiving water monitoring under Attachment E, Sections VIII.A.1 and VIII.B.1, is not required under this Order so long as the Discharger adequately supports the Delta Regional Monitoring Program. Participation in the Delta RMP by a Discharger shall consist of providing funds and/or in-kind services to the Delta RMP at least equivalent to discontinued individual monitoring and study efforts. If a discharger or discharger group fails to maintain adequate participation in the Delta RMP, as determined through criteria to be developed by the Delta RMP Steering Committee, the Steering Committee will recommend to the Central Valley Water Board that an individual monitoring program be reinstated for that discharger or discharger group.

If the Discharger is participating in the Delta Regional Monitoring Program as described in Attachment E, Section VIII, the Receiving Water portion of the required Characterization Study need not be conducted by the Discharger. Instead, data from the Delta Regional Monitoring Program will be utilized to characterize the receiving water in the permit renewal. The Discharger may, however, conduct any site-specific receiving water monitoring deemed appropriate by the Discharger and submit that monitoring data with this Characterization Study. In general, monitoring data from samples collected in the immediate vicinity of the discharge will be given greater weight in permitting decisions than receiving water monitoring data collected at greater distances from the discharge point. Historic receiving water monitoring data taken by the discharger and from other sources may also be evaluated to determine whether or not that data is representative of current receiving water conditions. If found to be representative of current conditions, then that historic data may be used

in characterizing receiving water quality for the purposes of Reasonable Potential analysis.

4. **Effluent and Receiving Water Characterization Study (Attachment I).** Add language to section II, Monitoring Requirements, as shown in underline format below:

II. Monitoring Requirements

If the Discharger is participating in the Delta Regional Monitoring Program as described in Attachment E, Section VIII, the Receiving Water portion of this Characterization Study is not required. However, the Report of Waste Discharge for the next permit renewal shall include, at minimum, one representative ambient background characterization monitoring event for priority pollutant constituents during the term of the permit. Data from the Delta Regional Monitoring Program plus any receiving water characterization conducted by the Discharger will be utilized to characterize the receiving water in the permit renewal. The Discharger may request that the RMP perform sampling and laboratory analysis to address all or a portion of the monitoring under this Characterization Monitoring with the understanding that the Discharger will provide funding to the RMP sufficient to reimburse all of the costs of this additional effort. Alternatively, the Discharger may conduct any site-specific receiving water monitoring deemed appropriate by the Discharger and submit that monitoring data with this Characterization Monitoring. In general, monitoring data from samples collected in the immediate vicinity of the discharge will be given greater weight in permitting decisions than receiving water monitoring data collected at greater distances from the discharge point.

IT IS HEREBY ORDERED THAT:

Waste Discharge Requirements Order R5-2010-0081-01 (NPDES No. CA0083771) is amended solely to address the Regional Monitoring Program in accordance with the Limitations and Discharge Requirements, section VI.C.1.a. **Effective immediately upon adoption**, Order R5-2010-0081-01 is amended as shown in Items 1-5 below.

1. **Limitations and Discharge Specifications.** Add the following text in section VII, Compliance Determination, as shown in underline format below:

   G. Use of Delta Regional Monitoring Program and other Receiving Water Data to determine compliance with Receiving Water Limitations. Delta Regional Monitoring Program data and other receiving water monitoring data that is not specifically required to be conducted by the Discharger under this permit, will not be used directly to determine that the discharge is in violation of this Permit. The Discharger may, however, conduct any site-specific receiving water monitoring deemed appropriate by the Discharger that is not conducted by the Delta RMP and submit that monitoring data. As described in Section VIII of Attachment E, such data may be used, if scientifically defensible, in conjunction with other receiving water data, effluent data, receiving water flow data, and other pertinent information to determine whether or not a discharge is in compliance with this Permit.

2. **Monitoring and Reporting Program.** Add the following text in section VIII, Receiving Water Monitoring Requirements – Surface Water, as shown in underline format below:

   VIII. RECEIVING WATER MONITORING REQUIREMENTS – SURFACE WATER

   The Discharger shall implement the Receiving Water Monitoring Requirements in Attachment E, Section VIII.A.1 of this Order. However, in lieu of conducting the individual monitoring specified in Attachment E, Section VIII.A.1 of this Order (including visual observations) the Discharger may elect to participate in the Delta Regional Monitoring Program.[1] The Discharger may choose to conduct all or part of the receiving water monitoring through the Delta Regional Monitoring Program. If the Discharger elects to cease all or part of the individual receiving water monitoring and instead participates in the Delta Regional Monitoring Program, the Discharger shall submit a letter signed by an authorized representative informing the Board that the Discharger will participate in the Delta Regional Monitoring Program, and the date on which individual receiving water monitoring required under Attachment E, Section VIII.A.1 will cease, or be modified, and specific monitoring locations and constituent combinations that will no longer be conducted individually. Written approval of the Discharger's request, by the Executive Officer, is required prior to discontinuing part or all of individual receiving water monitoring. Approval by the Executive Officer is not required prior to participating in the Delta Regional Monitoring Program.

[1] If the Discharger elects to participate in the Delta RMP, it shall continue to submit receiving water data for temperature. At minimum, one representative upstream receiving water temperature sample shall be submitted annually for the month of January. The temperature data shall be submitted in the January self-monitoring report and will be used to determine compliance with the temperature effluent limitation. Temperature data may be collected by the Discharger for this purpose or the Discharger may submit representative temperature data from the Delta RMP or other appropriate monitoring programs (e.g., Department of Water Resources, United States Geological Survey, etc.).

If the Discharger participates in the Delta Regional Monitoring Program in lieu of conducting individual receiving water monitoring, the Discharger shall continue to participate in the Delta Regional Monitoring Program until such time as the Discharger informs the Board that participation in the Delta RMP will cease and individual monitoring is reinstituted. Receiving water monitoring under Attachment E, Section VIII.A.1, is not required under this Order so long as the Discharger adequately supports the Delta Regional Monitoring Program. If the Discharger fails to adequately support the Delta Regional Monitoring Program, as defined by the Delta RMP Steering Committee, the Discharger shall reinstitute individual receiving water monitoring under Attachment E, Section VIII.A.1, upon written notice from the Executive Officer. During participation in the Delta RMP, the Discharger may, however, conduct and submit any or part of the receiving water monitoring included in this Monitoring and Reporting Program that is deemed appropriate by the Discharger.

Delta RMP data is not intended to be used directly to represent either upstream or downstream water quality for purposes of determining compliance with this Permit. Delta RMP monitoring stations are established generally as "integrator sites" to evaluate the combined impacts on water quality of multiple discharges into the Delta; Delta RMP monitoring stations would not normally be able to identify the source of any specific constituent, but would be used to identify water quality issues needing further evaluation. Delta RMP monitoring data, along with individual Discharger data, may be used to help establish background receiving water quality for Reasonable Potential analyses in an NPDES Permit after evaluation of the applicability of the data for that purpose. Delta RMP data, as with all environmental monitoring data, can provide an assessment of water quality at a specific place and time that can be used in conjunction with other information, such as other receiving water monitoring data, spatial and temporal distribution and trends of receiving water data, effluent data from the Discharger's discharge and other point and non-point source discharges, receiving water flow volume, speed and direction, and other information to determine the likely source or sources of a constituent that resulted in exceedance of a receiving water quality objective.

During the period of participation in the Delta Regional Monitoring Program, the Discharger shall continue to report any individually conducted receiving water monitoring data in the Electronic Self-Monitoring Reports (eSMR) according to the Monitoring and Reporting Program. In addition, 1) with each submitted eSMR, the Discharger's eSMR cover letter shall state that the Discharger is participating in the Delta Regional Monitoring Program in lieu of conducting the individual receiving water monitoring program required by the permit, and 2) with each annual report, the Discharger shall attach a copy of the letter originally submitted to the Central Valley Water Board describing the monitoring location(s) and constituent combinations that will no longer be conducted individually.

3. **Monitoring and Reporting Program.** Add text in section IX.E, Effluent and Receiving Water Characterization Study, as shown in underline format below:

E. Effluent and Receiving Water Characterization Study

<u>If the Discharger is participating in the Delta Regional Monitoring Program as described in Attachment E, Section VIII, the Receiving Water portion of this Characterization Study is not required. However, the Report of Waste Discharge for the next permit renewal shall include, at minimum, one representative ambient background characterization monitoring event for priority pollutant constituents during the term of the permit. Data from the Delta Regional Monitoring Program may be utilized to characterize the receiving water in the permit renewal. The Discharger may request that the RMP perform sampling and laboratory analysis to address all or a portion of the monitoring under this Characterization Study with the understanding that the Discharger will provide funding to the RMP sufficient to reimburse all of the costs of this additional effort. Alternatively, the Discharger may conduct any site-specific receiving water monitoring deemed appropriate by the Discharger and submit that monitoring data with this Characterization Study. In general, monitoring data from samples collected in the immediate vicinity of the discharge will be given greater weight in permitting decisions than receiving water monitoring data collected at greater distances from the discharge point.</u>

An effluent and receiving water monitoring study is required to ensure adequate information is available for the next permit renewal. During the third year of this permit term, the Discharger shall conduct quarterly monitoring of the effluent at EFF-001 and of the receiving water at RSW-001 for all priority pollutants and other constituents of concern as described in Attachment H. Dioxin and Furan sampling shall be performed only twice during the year, as described in Attachment I. The report shall be completed in conformance with the following schedule.

4. **Fact Sheet.** Add the following text in section VI.D.1.c, Rationale for Monitoring and Reporting Requirements, as shown in underline format below:

D. Receiving Water Monitoring

1. Surface Water

a. Receiving water monitoring is necessary to assess compliance with receiving water limitations and to assess the impacts of the discharge on the receiving stream.

b. Quarterly monitoring for priority pollutants upstream of Discharge Point No. 001 at RSW-001 is required during the third year of the permit term to collect the necessary data to determine reasonable potential as required in section 1.2 of the SIP. The pH and hardness (as $CaCO_3$) of the upstream receiving water shall also be monitored concurrently with the priority pollutants to ensure the water quality criteria/objectives are correctly adjusted for the receiving water when determining reasonable potential as specified in Section 1.3 of the SIP.

c. Delta Regional Monitoring Program

The Central Valley Water Board requires individual dischargers and discharger groups to conduct monitoring of Delta waters and Delta tributary waters in the vicinity of their discharge, known as ambient (or receiving) water quality monitoring. This monitoring provides information on the impacts of waste discharges on Delta waters, and on the extant condition of the Delta waters. However, the equivalent funds spent on current monitoring efforts could be used more efficiently and productively, and provide a better understanding of geographic and temporal distributions of contaminants and physical conditions in the Delta, and of other Delta water quality issues, if those funds were used for a coordinated ambient monitoring effort, rather than continue to be used in individual, uncoordinated ambient water quality monitoring programs. The Delta Regional Monitoring Program (RMP) will provide data to better inform management and policy decisions regarding the Delta.

This Order will allow Dischargers to elect to participate in the Delta RMP in lieu of conducting all or part of the individual receiving water monitoring required in the Monitoring and Reporting Program. If the Discharger elects to cease individual receiving water monitoring and participate in the Delta Regional Monitoring Program, the Discharger shall submit a letter signed by an authorized representative to the Executive Officer informing the Board that the Discharger will participate in the Delta Regional Monitoring Program and the date on which individual receiving water monitoring under Attachment E, Section VIII.A.1, will cease or be modified. Approval by the Executive Officer is required, and contingent on Delta RMP Steering Committee action on the forthcoming RMP monitoring plan.

Delta RMP data is not intended to be used directly to represent either upstream or downstream water quality for purposes of determining compliance with this Permit. Delta RMP monitoring stations are established generally as “integrator sites” to evaluate the combined impacts on water quality of multiple discharges into the Delta; Delta RMP monitoring stations would not normally be able to identify the source of any specific constituent, but would be used to identify water quality issues needing further evaluation. Delta RMP monitoring data may be used to help establish background receiving water quality for Reasonable Potential analyses in an NPDES Permit after evaluation of the applicability of the data for that purpose. In general, monitoring data from samples collected in the immediate vicinity of the discharge will be given greater weight in permitting decisions than receiving water monitoring data collected at greater distances from the discharge point. Delta RMP data, as with all environmental monitoring data, can provide an assessment of water quality at a specific place and time that can be used in conjunction with other information, such as other receiving water monitoring data, spatial and temporal distribution and trends of receiving water data, effluent data from the Discharger’s discharge and other point and non-point source discharges, receiving water flow volume, speed and direction, and other information to determine the likely source or sources of a constituent that resulted in exceedance of a receiving water quality objective.

If the Discharger begins to participate in the Delta Regional Monitoring Program in lieu of individual receiving water monitoring, the Discharger shall continue to participate in the Delta Regional Monitoring Program until such time as the Discharger informs the Board that participation in the Delta RMP will cease and individual monitoring is reinstituted.

Receiving water monitoring under Attachment E, Section VIII.A.1, is not required under this Order so long as the Discharger adequately supports the Delta Regional Monitoring Program. Participation in the Delta RMP by a Discharger shall consist of providing funds and/or in-kind services to the Delta RMP at least equivalent to discontinued individual monitoring and study efforts. If a discharger or discharger group fails to maintain adequate participation in the Delta RMP, as determined through criteria to be developed by the Delta RMP Steering Committee, the Steering Committee will recommend to the Central Valley Water Board that an individual monitoring program be reinstated for that discharger or discharger group.

If the Discharger is participating in the Delta Regional Monitoring Program as described in Attachment E, Section VIII, the Receiving Water portion of the required Characterization Study need not be conducted by the Discharger. Instead, data from the Delta Regional Monitoring Program will be utilized to characterize the receiving water in the permit renewal. The Discharger may, however, conduct any site-specific receiving water monitoring deemed appropriate by the Discharger and submit that monitoring data with this Characterization Study. In general, monitoring data from samples collected in the immediate vicinity of the discharge will be given greater weight in permitting decisions than receiving water monitoring data collected at greater distances from the discharge point. Historic receiving water monitoring data taken by the discharger and from other sources may also be evaluated to determine whether or not that data is representative of current receiving water conditions. If found to be representative of current conditions, then that historic data may be used in characterizing receiving water quality for the purposes of Reasonable Potential analysis.

5. **Effluent and Receiving Water Characterization Study (Attachment H).** Add language to section II, Monitoring Requirements, as shown in underline format below:

II. Monitoring Requirements

If the Discharger is participating in the Delta Regional Monitoring Program as described in Attachment E, Section VIII the Receiving Water portion of this Characterization Study is not required. However, the Report of Waste Discharge for the next permit renewal shall include, at minimum, one representative ambient background characterization monitoring event for priority pollutant constituents during the term of the permit. Data from the Delta Regional Monitoring Program plus any receiving water characterization conducted by the Discharger will be utilized to characterize the receiving water in the permit renewal. The Discharger may request that the RMP perform sampling and laboratory analysis to address all or a portion of the monitoring under this Characterization Monitoring with the understanding that the Discharger will provide funding to the RMP sufficient to reimburse all of the costs of this additional effort. Alternatively, the Discharger may conduct any site-specific receiving water monitoring deemed appropriate by the Discharger and submit that monitoring data with this Characterization Monitoring. In general, monitoring data from samples collected in the immediate vicinity of the discharge will be given greater weight in permitting decisions than receiving water monitoring data collected at greater distances from the discharge point.

IT IS HEREBY ORDERED THAT:

Waste Discharge Requirements Order R5-2014-0072 (NPDES No. CA0077691) is amended solely to address the Regional Monitoring Program in accordance with the Limitations and Discharge Requirements, section VI.C.1.d. **Effective immediately upon adoption**, Order R5-2014-0072 is amended as shown in Items 1-4 below.

1. **Limitations and Discharge Specifications.** Remove section VI.C.1.d, Reopener Provision for Regional Monitoring Program, and add the following text in section VII, Compliance Determination, as shown in underline format below:

   H. Use of Delta Regional Monitoring Program and other Receiving Water Data to determine compliance with Receiving Water Limitations. Delta Regional Monitoring Program data and other receiving water monitoring data that is not specifically required to be conducted by the Discharger under this permit, will not be used directly to determine that the discharge is in violation of this Permit. The Discharger may, however, conduct any site-specific receiving water monitoring deemed appropriate by the Discharger that is not conducted by the Delta RMP and submit that monitoring data. As described in Section VIII of Attachment E, such data may be used, if scientifically defensible, in conjunction with other receiving water data, effluent data, receiving water flow data, and other pertinent information to determine whether or not a discharge is in compliance with this Permit.

2. **Monitoring and Reporting Program.** Add the following text in section VIII, Receiving Water Monitoring Requirements, as shown in underline format below:

   VIII. RECEIVING WATER MONITORING REQUIREMENTS

   The Discharger shall implement the Receiving Water Monitoring Requirements in Attachment E, Sections VIII.A.1 and VIII.B.1 of this Order. However, in lieu of conducting the individual monitoring specified in Attachment E, Sections VIII.A.1 and VIII.B.1 of this Order the Discharger may elect to participate in the Delta Regional Monitoring Program. The Discharger may choose to conduct all or part of the receiving water monitoring through the Delta Regional Monitoring Program. If the Discharger elects to cease all or part of the individual receiving water monitoring and instead participates in the Delta Regional Monitoring Program, the Discharger shall submit a letter signed by an authorized representative informing the Board that the Discharger will participate in the Delta Regional Monitoring Program, and the date on which individual receiving water monitoring required under Attachment E, Sections VIII.A.1 and VIII.B.1 will cease, or be modified, and specific monitoring locations and constituent combinations that will no longer be conducted individually. Written approval of the Discharger's request, by the Executive Officer, is required prior to discontinuing part or all of individual receiving water monitoring. Approval by the Executive Officer is not required prior to participating in the Delta Regional Monitoring Program.

   If the Discharger participates in the Delta Regional Monitoring Program in lieu of conducting individual receiving water monitoring, the Discharger shall continue to participate in the Delta Regional Monitoring Program until such time as the Discharger informs the Board that participation in the Delta RMP will cease and individual monitoring is reinstituted. Receiving water monitoring under Attachment E, Sections VIII.A.1 and VIII.B.1, is not required under this

Order so long as the Discharger adequately supports the Delta Regional Monitoring Program. If the Discharger fails to adequately support the Delta Regional Monitoring Program, as defined by the Delta RMP Steering Committee, the Discharger shall reinstitute individual receiving water monitoring under Attachment E, Sections VIII.A.1 and VIII.B.1 upon written notice from the Executive Officer. During participation in the Delta RMP, the Discharger may conduct and submit any or part of the receiving water monitoring included in this Monitoring and Reporting Program that is deemed appropriate by the Discharger.

Delta RMP data is not intended to be used directly to represent either upstream or downstream water quality for purposes of determining compliance with this Permit. Delta RMP monitoring stations are established generally as "integrator sites" to evaluate the combined impacts on water quality of multiple discharges into the Delta; Delta RMP monitoring stations would not normally be able to identify the source of any specific constituent, but would be used to identify water quality issues needing further evaluation. Delta RMP monitoring data, along with individual Discharger data, may be used to help establish background receiving water quality for Reasonable Potential analyses in an NPDES Permit after evaluation of the applicability of the data for that purpose. Delta RMP data, as with all environmental monitoring data, can provide an assessment of water quality at a specific place and time that can be used in conjunction with other information, such as other receiving water monitoring data, spatial and temporal distribution and trends of receiving water data, effluent data from the Discharger's discharge and other point and non-point source discharges, receiving water flow volume, speed and direction, and other information to determine the likely source or sources of a constituent that resulted in exceedance of a receiving water quality objective.

During the period of participation in the Delta Regional Monitoring Program, the Discharger shall continue to report any individually conducted receiving water monitoring data in the Electronic Self-Monitoring Reports (eSMR) according to the Monitoring and Reporting Program. In addition, 1) with each submitted eSMR, the Discharger's eSMR cover letter shall state that the Discharger is participating in the Delta Regional Monitoring Program in lieu of conducting the individual receiving water monitoring program required by the permit, and 2) with each annual report, the Discharger shall attach a copy of the letter originally submitted to the Central Valley Water Board describing the monitoring location(s) and constituent combinations that will no longer be conducted individually.

3. **Monitoring and Reporting Program.** Add text in section IX.C, Effluent and Receiving Water Characterization Study (July 2017 – June 2018), as shown in underline format below:

C. Effluent and Receiving Water Characterization (July 2017 – June 2018)

If the Discharger is participating in the Delta Regional Monitoring Program as described in Attachment E, Section VIII, the Receiving Water portion of this Characterization Monitoring is not required. However, the Report of Waste Discharge for the next permit renewal shall include, at minimum, one representative ambient background characterization monitoring event for priority pollutant constituents during the term of the permit. Data from the Delta Regional Monitoring Program may be utilized to characterize the receiving water in the permit renewal. The Discharger may request that the RMP perform sampling and laboratory analysis to address all or a portion of the monitoring under this Characterization Monitoring with the understanding that the Discharger will provide funding to the RMP sufficient to reimburse all

of the costs of this additional effort. Alternatively, the Discharger may conduct any site-specific receiving water monitoring deemed appropriate by the Discharger and submit that monitoring data with this Characterization Monitoring. In general, monitoring data from samples collected in the immediate vicinity of the discharge will be given greater weight in permitting decisions than receiving water monitoring data collected at greater distances from the discharge point.

4. **Fact Sheet.** Remove section VI.B.1.b, Rationale for Reopener Provision for Regional Monitoring Program, and add section VII.D.1.b, Rationale for Monitoring and Reporting Requirements, as shown in underline format below:

D. Receiving Water Monitoring

1. Surface Water

a. Receiving water monitoring is necessary to assess compliance with receiving water limitations and to assess the impacts of the discharge on the receiving stream.

b. Delta Regional Monitoring Program

The Central Valley Water Board requires individual dischargers and discharger groups to conduct monitoring of Delta waters and Delta tributary waters in the vicinity of their discharge, known as ambient (or receiving) water quality monitoring. This monitoring provides information on the impacts of waste discharges on Delta waters, and on the extant condition of the Delta waters. However, the equivalent funds spent on current monitoring efforts could be used more efficiently and productively, and provide a better understanding of geographic and temporal distributions of contaminants and physical conditions in the Delta, and of other Delta water quality issues, if those funds were used for a coordinated ambient monitoring effort, rather than continue to be used in individual, uncoordinated ambient water quality monitoring programs. The Delta Regional Monitoring Program (RMP) will provide data to better inform management and policy decisions regarding the Delta.

This Order will allow Dischargers to elect to participate in the Delta RMP in lieu of conducting all or part of the individual receiving water monitoring required in the Monitoring and Reporting Program. If the Discharger elects to cease individual receiving water monitoring and participate in the Delta Regional Monitoring Program, the Discharger shall submit a letter signed by an authorized representative to the Executive Officer informing the Board that the Discharger will participate in the Delta Regional Monitoring Program and the date on which individual receiving water monitoring under Attachment E, Sections VIII.A.1 and VIII.B.1, will cease or be modified. Approval by the Executive Officer is - required, and contingent on Delta RMP Steering Committee action on the forthcoming RMP monitoring plan.

Delta RMP data is not intended to be used directly to represent either upstream or downstream water quality for purposes of determining compliance with this Permit. Delta RMP monitoring stations are established generally as “integrator sites” to evaluate the combined impacts on water quality of multiple discharges into the Delta; Delta RMP monitoring stations would not normally be able to identify the source of any specific

constituent, but would be used to identify water quality issues needing further evaluation. Delta RMP monitoring data may be used to help establish background receiving water quality for Reasonable Potential analyses in an NPDES Permit after evaluation of the applicability of the data for that purpose. In general, monitoring data from samples collected in the immediate vicinity of the discharge will be given greater weight in permitting decisions than receiving water monitoring data collected at greater distances from the discharge point. Delta RMP data, as with all environmental monitoring data, can provide an assessment of water quality at a specific place and time that can be used in conjunction with other information, such as other receiving water monitoring data, spatial and temporal distribution and trends of receiving water data, effluent data from the Discharger's discharge and other point and non-point source discharges, receiving water flow volume, speed and direction, and other information to determine the likely source or sources of a constituent that resulted in exceedance of a receiving water quality objective.

If the Discharger begins to participate in the Delta Regional Monitoring Program in lieu of individual receiving water monitoring, the Discharger shall continue to participate in the Delta Regional Monitoring Program until such time as the Discharger informs the Board that participation in the Delta RMP will cease and individual monitoring is reinstituted. Receiving water monitoring under Attachment E, Sections VIII.A.1 and VIII.B.1, is not required under this Order so long as the Discharger adequately supports the Delta Regional Monitoring Program. Participation in the Delta RMP by a Discharger shall consist of providing funds and/or in-kind services to the Delta RMP at least equivalent to discontinued individual monitoring and study efforts. If a discharger or discharger group fails to maintain adequate participation in the Delta RMP, as determined through criteria to be developed by the Delta RMP Steering Committee, the Steering Committee will recommend to the Central Valley Water Board that an individual monitoring program be reinstated for that discharger or discharger group.

If the Discharger is participating in the Delta Regional Monitoring Program as described in Attachment E, Section VIII, the Receiving Water portion of the required Characterization Monitoring need not be conducted by the Discharger. Instead, data from the Delta Regional Monitoring Program will be utilized to characterize the receiving water in the permit renewal. The Discharger may, however, conduct any site-specific receiving water monitoring deemed appropriate by the Discharger and submit that monitoring data with this Characterization Monitoring. In general, monitoring data from samples collected in the immediate vicinity of the discharge will be given greater weight in permitting decisions than receiving water monitoring data collected at greater distances from the discharge point. Historic receiving water monitoring data taken by the discharger and from other sources may also be evaluated to determine whether or not that data is representative of current receiving water conditions. If found to be representative of current conditions, then that historic data may be used in characterizing receiving water quality for the purposes of Reasonable Potential analysis.

IT IS HEREBY ORDERED THAT:

Waste Discharge Requirements Order R5-2013-0127 (NPDES No. CA0079049) is amended solely to address the Regional Monitoring Program in accordance with the Limitations and Discharge Requirements, section VI.C.1.g. **Effective immediately upon adoption**, Order R5-2013-0127 is amended as shown in Items 1-5 below.

1. **Limitations and Discharge Specifications.** Remove section VI.C.1.g, Reopener Provision for Regional Monitoring Program, and add the following text in section VII, Compliance Determination, as shown in underline format below:

   L. Use of Delta Regional Monitoring Program and other Receiving Water Data to determine compliance with Receiving Water Limitations. Delta Regional Monitoring Program data and other receiving water monitoring data that is not specifically required to be conducted by the Discharger under this permit, will not be used directly to determine that the discharge is in violation of this Permit. The Discharger may, however, conduct any site-specific receiving water monitoring deemed appropriate by the Discharger that is not conducted by the Delta RMP and submit that monitoring data. As described in Section VIII of Attachment E, such data may be used, if scientifically defensible, in conjunction with other receiving water data, effluent data, receiving water flow data, and other pertinent information to determine whether or not a discharge is in compliance with this Permit.

2. **Monitoring and Reporting Program.** Add the following text in section VIII, Receiving Water Monitoring Requirements – Surface Water and Groundwater, as shown in underline format below:

   VIII. RECEIVING WATER MONITORING REQUIREMENTS – SURFACE WATER AND GROUNDWATER

   The Discharger shall implement the Receiving Water Monitoring Requirements in Attachment E, Sections VIII.A.1 and VIII.A.2 of this Order. However, in lieu of conducting the individual monitoring specified in Attachment E, Sections VIII.A.1 and VIII.A.2 of this Order (including visual observations) the Discharger may elect to participate in the Delta Regional Monitoring Program. The Discharger may choose to conduct all or part of the receiving water monitoring through the Delta Regional Monitoring Program. If the Discharger elects to cease all or part of the individual receiving water monitoring and instead participates in the Delta Regional Monitoring Program, the Discharger shall submit a letter signed by an authorized representative informing the Board that the Discharger will participate in the Delta Regional Monitoring Program, and the date on which individual receiving water monitoring required under Attachment E, Sections VIII.A.1 and VIII.A.2 will cease, or be modified, and specific monitoring locations and constituent combinations that will no longer be conducted individually. Written approval of the Discharger's request, by the Executive Officer, is required prior to discontinuing part or all of individual receiving water monitoring. Approval by the Executive Officer is not required prior to participating in the Delta Regional Monitoring Program.

   If the Discharger participates in the Delta Regional Monitoring Program in lieu of conducting individual receiving water monitoring, the Discharger shall continue to participate in the Delta Regional Monitoring Program until such time as the Discharger informs the Board that

participation in the Delta RMP will cease and individual monitoring is reinstituted. Receiving water monitoring under Attachment E, Sections VIII.A.1 and VIII.A.2, is not required under this Order so long as the Discharger adequately supports the Delta Regional Monitoring Program. If the Discharger fails to adequately support the Delta Regional Monitoring Program, as defined by the Delta RMP Steering Committee, the Discharger shall reinstitute individual receiving water monitoring under Attachment E, Sections VIII.A.1 and VIII.A.2 upon written notice from the Executive Officer. During participation in the Delta RMP, the Discharger may conduct and submit included in this Monitoring and Reporting Program that is any or part of the receiving water monitoring deemed appropriate by the Discharger.

Delta RMP data is not intended to be used directly to represent either upstream or downstream water quality for purposes of determining compliance with this Permit. Delta RMP monitoring stations are established generally as "integrator sites" to evaluate the combined impacts on water quality of multiple discharges into the Delta; Delta RMP monitoring stations would not normally be able to identify the source of any specific constituent, but would be used to identify water quality issues needing further evaluation. Delta RMP monitoring data, along with individual Discharger data, may be used to help establish background receiving water quality for Reasonable Potential analyses in an NPDES Permit after evaluation of the applicability of the data for that purpose. Delta RMP data, as with all environmental monitoring data, can provide an assessment of water quality at a specific place and time that can be used in conjunction with other information, such as other receiving water monitoring data, spatial and temporal distribution and trends of receiving water data, effluent data from the Discharger's discharge and other point and non-point source discharges, receiving water flow volume, speed and direction, and other information to determine the likely source or sources of a constituent that resulted in exceedance of a receiving water quality objective.

During the period of participation in the Delta Regional Monitoring Program, the Discharger shall continue to report any individually conducted receiving water monitoring data in the Electronic Self-Monitoring Reports (eSMR) according to the Monitoring and Reporting Program. In addition, 1) with each submitted eSMR, the Discharger's eSMR cover letter shall state that the Discharger is participating in the Delta Regional Monitoring Program in lieu of conducting the individual receiving water monitoring program required by the permit, and 2) with each annual report, the Discharger shall attach a copy of the letter originally submitted to the Central Valley Water Board describing the monitoring location(s) and constituent combinations that will no longer be conducted individually.

3. **Monitoring and Reporting Program.** Add text in section X.D.4, Effluent and Receiving Water Characterization Study, as shown in underline format below:

4. **Effluent and Receiving Water Characterization Study.** An effluent and receiving water monitoring study is required to ensure adequate information is available for the permit renewal. The Discharger shall conduct bi-monthly monitoring of the effluent during the third year of the permit term at Monitoring Locations EFF-001 and EFF-002 and of the receiving water at Monitoring Locations RSW-001U and RSW-002U for all priority pollutants and other constituents of concern as described in Attachment I.

If the Discharger is participating in the Delta Regional Monitoring Program as described in Attachment E, Section VIII, the Receiving Water portion of this Characterization Study is not

required. However, the Report of Waste Discharge for the next permit renewal shall include, at minimum, one representative ambient background characterization monitoring event for priority pollutant constituents during the term of the permit. Data from the Delta Regional Monitoring Program may be utilized to characterize the receiving water in the permit renewal. The Discharger may request that the RMP perform sampling and laboratory analysis to address all or a portion of the monitoring under this Characterization Study with the understanding that the Discharger will provide funding to the RMP sufficient to reimburse all of the costs of this additional effort. Alternatively, the Discharger may conduct any site-specific receiving water monitoring deemed appropriate by the Discharger and submit that monitoring data with this Characterization Study. In general, monitoring data from samples collected in the immediate vicinity of the discharge will be given greater weight in permitting decisions than receiving water monitoring data collected at greater distances from the discharge point.

4. **Fact Sheet.** Remove section VII.B.1.e, Rationale for Reopener Provision for Regional Monitoring Program, and add section VI.D.1.d, Rationale for Monitoring and Reporting Requirements, as shown in underline format below:

D. Receiving Water Monitoring

1. Surface Water

a. Receiving water monitoring is necessary to assess compliance with receiving water limitations and to assess the impacts of the discharge on the receiving stream.

b. Receiving water monitoring frequencies and sample types for dissolved oxygen (weekly), electrical conductivity (weekly), fecal coliform organisms (monthly), hardness (quarterly), pH (weekly), temperature (weekly), and turbidity (monthly) have been retained from Order R5-2007-0132-02.

c. Order R5-2007-0132-02 did not require priority pollutant monitoring for the upstream receiving waters. In accordance with section 1.3 of the SIP, periodic monitoring for priority pollutants for which criteria or objectives apply and for which no effluent limitations have been established. This Order requires bimonthly monitoring during the third year of the permit term for priority pollutants and other pollutants of concern, performed concurrently with effluent monitoring, in order to collect data to conduct an RPA for the next permit renewal. See Attachment I for more detailed requirements related to performing priority pollutant monitoring.

d. Delta Regional Monitoring Program

The Central Valley Water Board requires individual dischargers and discharger groups to conduct monitoring of Delta waters and Delta tributary waters in the vicinity of their discharge, known as ambient (or receiving) water quality monitoring. This monitoring provides information on the impacts of waste discharges on Delta waters, and on the extant condition of the Delta waters. However, the equivalent funds spent on current monitoring efforts could be used more efficiently and productively, and provide a better understanding of geographic and temporal distributions of contaminants and physical conditions in the Delta, and of other Delta water quality issues, if those funds were used for a coordinated ambient monitoring effort, rather than continue to be used in individual,

uncoordinated ambient water quality monitoring programs. The Delta Regional Monitoring Program (RMP) will provide data to better inform management and policy decisions regarding the Delta.

This Order will allow Dischargers to elect to participate in the Delta RMP in lieu of conducting all or part of the individual receiving water monitoring required in the Monitoring and Reporting Program. If the Discharger elects to cease individual receiving water monitoring and participate in the Delta Regional Monitoring Program, the Discharger shall submit a letter signed by an authorized representative to the Executive Officer informing the Board that the Discharger will participate in the Delta Regional Monitoring Program and the date on which individual receiving water monitoring under Attachment E, Sections VIII.A.1 and VIII.A.2, will cease or be modified. Approval by the Executive Officer is - required, and contingent on Delta RMP Steering Committee action on the forthcoming RMP monitoring plan.

Delta RMP data is not intended to be used directly to represent either upstream or downstream water quality for purposes of determining compliance with this Permit. Delta RMP monitoring stations are established generally as “integrator sites” to evaluate the combined impacts on water quality of multiple discharges into the Delta; Delta RMP monitoring stations would not normally be able to identify the source of any specific constituent, but would be used to identify water quality issues needing further evaluation. Delta RMP monitoring data may be used to help establish background receiving water quality for Reasonable Potential analyses in an NPDES Permit after evaluation of the applicability of the data for that purpose. In general, monitoring data from samples collected in the immediate vicinity of the discharge will be given greater weight in permitting decisions than receiving water monitoring data collected at greater distances from the discharge point. Delta RMP data, as with all environmental monitoring data, can provide an assessment of water quality at a specific place and time that can be used in conjunction with other information, such as other receiving water monitoring data, spatial and temporal distribution and trends of receiving water data, effluent data from the Discharger’s discharge and other point and non-point source discharges, receiving water flow volume, speed and direction, and other information to determine the likely source or sources of a constituent that resulted in exceedance of a receiving water quality objective.

If the Discharger begins to participate in the Delta Regional Monitoring Program in lieu of individual receiving water monitoring, the Discharger shall continue to participate in the Delta Regional Monitoring Program until such time as the Discharger informs the Board that participation in the Delta RMP will cease and individual monitoring is reinstituted. Receiving water monitoring under Attachment E, Sections VIII.A.1 and VIII.A.2, is not required under this Order so long as the Discharger adequately supports the Delta Regional Monitoring Program. Participation in the Delta RMP by a Discharger shall consist of providing funds and/or in-kind services to the Delta RMP at least equivalent to discontinued individual monitoring and study efforts. If a discharger or discharger group fails to maintain adequate participation in the Delta RMP, as determined through criteria to be developed by the Delta RMP Steering Committee, the Steering Committee will recommend to the Central Valley Water Board that an individual monitoring program be reinstated for that discharger or discharger group.

If the Discharger is participating in the Delta Regional Monitoring Program as described in Attachment E, Section VIII, the Receiving Water portion of the required Characterization Study need not be conducted by the Discharger. Instead, data from the Delta Regional Monitoring Program will be utilized to characterize the receiving water in the permit renewal. The Discharger may, however, conduct any site-specific receiving water monitoring deemed appropriate by the Discharger and submit that monitoring data with this Characterization Study. In general, monitoring data from samples collected in the immediate vicinity of the discharge will be given greater weight in permitting decisions than receiving water monitoring data collected at greater distances from the discharge point. Historic receiving water monitoring data taken by the discharger and from other sources may also be evaluated to determine whether or not that data is representative of current receiving water conditions. If found to be representative of current conditions, then that historic data may be used in characterizing receiving water quality for the purposes of Reasonable Potential analysis.

5. **Effluent and Receiving Water Characterization Study (Attachment I).** Add language to section II, Monitoring Requirements, as shown in underline format below:

II. Monitoring Requirements

If the Discharger is participating in the Delta Regional Monitoring Program as described in Attachment E, Section VIII, the Receiving Water portion of this Characterization Study is not required. However, the Report of Waste Discharge for the next permit renewal shall include, at minimum, one representative ambient background characterization monitoring event for priority pollutant constituents during the term of the permit. Data from the Delta Regional Monitoring Program plus any receiving water characterization conducted by the Discharger will be utilized to characterize the receiving water in the permit renewal. The Discharger may request that the RMP perform sampling and laboratory analysis to address all or a portion of the monitoring under this Characterization Monitoring with the understanding that the Discharger will provide funding to the RMP sufficient to reimburse all of the costs of this additional effort. Alternatively, the Discharger may conduct any site-specific receiving water monitoring deemed appropriate by the Discharger and submit that monitoring data with this Characterization Monitoring. In general, monitoring data from samples collected in the immediate vicinity of the discharge will be given greater weight in permitting decisions than receiving water monitoring data collected at greater distances from the discharge point.

CALIFORNIA REGIONAL WATER QUALITY CONTROL BOARD
CENTRAL VALLEY REGION

11020 Sun Center Drive, #200 Rancho Cordova, California 95670-6114
Phone (916) 464-3291 • Fax (916) 464-4645
http://www.waterboards.ca.gov/centralvalley

ORDER R5-2014-0014-01
NPDES NO. CA0078093

WASTE DISCHARGE REQUIREMENTS FOR THE CALIFORNIA DEPARTMENT OF CORRECTIONS AND REHABILITATION DEUEL VOCATIONAL INSTITUTION SAN JOAQUIN COUNTY

The following Discharger is subject to waste discharge requirements (WDR's) set forth in this Order:

Table 1. Discharger Information

Discharger	California Department of Corrections and Rehabilitation
Name of Facility	Deuel Vocational Institution
Facility Address	23500 Kasson Road
	Tracy, CA 95376
	San Joaquin County

Table 2. Discharge Location

Discharge Point	Effluent Description	Discharge Point Latitude (North)	Discharge Point Longitude (West)	Receiving Water
001	Tertiary Treated Municipal Wastewater	37º 45' 02"	121º 19' 35"	Deuel Drain

Table 3. Administrative Information

This Order was adopted on:	**7 February 2014**
This Order shall become effective on:	**29 March 2014**
This Order shall expire on:	**1 March 2019**
The Discharger shall file a Report of Waste Discharge as an application for reissuance of WDR's in accordance with title 23, California Code of Regulations, and an application for reissuance of a National Pollutant Discharge Elimination System (NPDES) permit no later than:	**1 September 2018**
The U.S. Environmental Protection Agency (U.S. EPA) and the California Regional Water Quality Control Board, Central Valley Region have classified this discharge as follows:	**Minor**

I, **PAMELA C. CREEDON**, Executive Officer, do hereby certify that this Order with all attachments is a full, true, and correct copy of the Order adopted by the California Regional Water Quality Control Board, Central Valley Region, on 7 February 2014, and amended by Order R5-2014-0122 on 9 October 2014.

ORIGINAL SIGNED BY

PAMELA C. CREEDON, Executive Officer

CONTENTS

I. Facility Information ... 3
II. Findings ... 3
III. Discharge Prohibitions ... 4
IV. Effluent Limitations and Discharge Specifications ... 4
A. Effluent Limitations – Discharge Point 001 ... 4
1. Final Effluent Limitations – Discharge Point 001 ... 4
2. Interim Effluent Limitations – Discharge Point 001 ... 6
B. Land Discharge Specifications – Not Applicable ... 6
C. Recycling Specifications – Not Applicable ... 6
V. Receiving Water Limitations ... 6
A. Surface Water Limitations ... 6
B. Groundwater Limitations ... 8
VI. Provisions ... 8
A. Standard Provisions ... 8
B. Monitoring and Reporting Program (MRP) Requirements ... 12
C. Special Provisions ... 12
1. Reopener Provisions ... 12
2. Special Studies, Technical Reports and Additional Monitoring Requirements ... 13
3. Best Management Practices and Pollution Prevention ... 15
4. Construction, Operation and Maintenance Specifications ... 16
5. Special Provisions for Municipal Facilities (POTWs Only) ... 16
6. Other Special Provisions ... 18
7. Compliance Schedules ... 19
VII. Compliance Determination ... 20

TABLES

Table 1. Discharger Information ... 1
Table 2. Discharge Location ... 1
Table 3. Administrative Information ... 1
Table 4. Effluent Limitations – Discharge Point 001 ... 4

ATTACHMENTS

Attachment A – Definitions ... A-1
Attachment B – Map ... B-1
Attachment C – Flow Schematic ... C-1
Attachment D – Standard Provisions ... D-1
Attachment E – Monitoring and Reporting Program ... E-1
Attachment F – Fact Sheet ... F-1
Attachment G – Summary of Reasonable Potential Analysis for Constituents of Concern ... G-1
Attachment H – Calculation of WQBELS Monitoring Location EFF-001 ... H-1

I. FACILITY INFORMATION

Information describing the California Department of Corrections and Rehabilitation, Deuel Vocational Institution (Facility) is summarized in Table 1 and in sections I and II of the Fact Sheet (Attachment F). Section I of the Fact Sheet also includes information regarding the Facility's permit application.

II. FINDINGS

The California Regional Water Quality Control Board, Central Valley Region (hereinafter Central Valley Water Board), finds:

A. Legal Authorities. This Order serves as WDR's pursuant to article 4, chapter 4, division 7 of the California Water Code (commencing with section 13260). This Order is also issued pursuant to section 402 of the federal Clean Water Act (CWA) and implementing regulations adopted by the U.S. EPA and chapter 5.5, division 7 of the Water Code (commencing with section 13370). It shall serve as an NPDES permit for point source discharges from this Facility to surface waters.

B. Background and Rationale for Requirements. The Central Valley Water Board developed the requirements in this Order based on information submitted as part of the application, through monitoring and reporting programs, and other available information. The Fact Sheet (Attachment F), which contains background information and rationale for the requirements in this Order, is hereby incorporated into and constitutes Findings for this Order. Attachments A through E and G through I are also incorporated into this Order.

C. Provisions and Requirements Implementing State Law. The provisions/requirements in subsections IV.B, IV.C, and V.B are included to implement State law only. These provisions/requirements are not required or authorized under the federal CWA; consequently, violations of these provisions/requirements are not subject to the enforcement remedies that are available for NPDES violations.

D. Monitoring and Reporting. 40 CFR 122.48 requires that all NPDES permits specify requirements for recording and reporting monitoring results. Water Code sections 13267 and 13383 authorize the Central Valley Water Board to require technical and monitoring reports. The Monitoring and Reporting Program establishes monitoring and reporting requirements to implement federal and State requirements. The Monitoring and Reporting Program is provided in Attachment E.

The technical and monitoring reports in this Order are required in accordance with Water Code section 13267, which states the following in subsection (b)(1), "*In conducting an investigation specified in subdivision (a), the regional board may require that any person who has discharged, discharges, or is suspected of having discharged discharging, or who proposes to discharge waste within its region, or any citizen or domiciary, or political agency or entity of this state who has discharged, discharges, or is suspected of having discharged or discharging, or who proposes to discharge, waste outside of its region could affect the quality of waters within its region shall furnish, under penalty of perjury, technical or monitoring program reports which the regional board requires. The burden, including costs, of these reports shall bear a reasonable relationship to the need for the report and the benefits to be obtained from the reports. In requiring those reports, the regional board shall provide the person with a written explanation with regard to the need for the reports, and shall identify the evidence that supports requiring that person to provide the reports*."

The Discharger owns and operates the Facility subject to this Order. The monitoring reports required by this Order are necessary to determine compliance with this Order. The need for the monitoring reports is discussed in the Fact Sheet.

E. Notification of Interested Parties. The Central Valley Water Board has notified the Discharger and interested agencies and persons of its intent to prescribe WDR's for the discharge and has provided them with an opportunity to submit their written comments and recommendations. Details of the notification are provided in the Fact Sheet.

F. Consideration of Public Comment. The Central Valley Water Board, in a public meeting, heard and considered all comments pertaining to the discharge. Details of the Public Hearing are provided in the Fact Sheet.

THEREFORE, IT IS HEREBY ORDERED that Order R5-2008-0164 is rescinded upon the effective date of this Order except for enforcement purposes, and, in order to meet the provisions contained in division 7 of the Water Code (commencing with section 13000) and regulations adopted thereunder, and the provisions of the CWA and regulations and guidelines adopted thereunder, the Discharger shall comply with the requirements in this Order. This action in no way prevents the Central Valley Water Board from taking enforcement action for past violations of the previous Order.

III. DISCHARGE PROHIBITIONS

A. Discharge of wastewater at a location or in a manner different from that described in this Order is prohibited.

B. The by-pass or overflow of wastes to surface waters is prohibited, except as allowed by Federal Standard Provisions I.G. and I.H. (Attachment D).

C. Neither the discharge nor its treatment shall create a nuisance as defined in section 13050 of the Water Code.

D. The Discharger shall not allow pollutant-free wastewater to be discharged into the treatment or disposal system in amounts that significantly diminish the system's capability to comply with this Order. Pollutant-free wastewater means rainfall, groundwater, cooling waters, and condensates that are essentially free of pollutants.

IV. EFFLUENT LIMITATIONS AND DISCHARGE SPECIFICATIONS

A. Effluent Limitations – Discharge Point 001

1. Final Effluent Limitations – Discharge Point 001

The Discharger shall maintain compliance with the following effluent limitations at Discharge Point 001, with compliance measured at Monitoring Location EFF-001 as described in the Monitoring and Reporting Program, Attachment E:

a. The Discharger shall maintain compliance with the effluent limitations specified in Table 4:

Table 4. Effluent Limitations – Discharge Point 001

Parameter	Units	Effluent Limitations				
		Average Monthly	Average Weekly	Maximum Daily	Instantaneous Minimum	Instantaneous Maximum
Conventional Pollutants						
Biochemical Oxygen Demand (5-day @ 20°C)	mg/L	10	15	20	--	--
	lbs/day[1]	52	78	103	--	--

Parameter	Units	Effluent Limitations				
		Average Monthly	Average Weekly	Maximum Daily	Instantaneous Minimum	Instantaneous Maximum
pH	standard units	--	--	--	6.5	8.5
Total Suspended Solids	mg/L	10	15	20	--	--
	lbs/day[1]	52	78	103	--	--
Priority Pollutants						
Copper, Total Recoverable	µg/L	25	--	10	--	--
Cyanide, Total (as CN)	µg/L	4.3	--	8.5	--	--
Non-Conventional Pollutants						
Ammonia Nitrogen, Total (as N)	mg/L	0.7	--	2.2	--	--
	lbs/day[1]	3.6	--	11.4	--	--
Nitrite Nitrogen, Total (as N)	mg/L	1.0	--	--	--	--
Nitrate plus Nitrite (as N)	mg/L	10	--	--	--	--

[1] Based on an average dry weather flow of 0.62 MGD.

b. **Percent Removal**: The average monthly percent removal of 5-day biochemical oxygen demand (BOD_5) and total suspended solids (TSS) shall not be less than 85 percent.

c. **Acute Whole Effluent Toxicity**. Survival of aquatic organisms in 96-hour bioassays of undiluted waste shall be no less than:

   i. 70%, minimum for any one bioassay; and

   ii. 90%, median for any three consecutive bioassays.

d. **Temperature.** The maximum temperature of the discharge shall not exceed the natural receiving water temperature by more than 20°F.

e. **Chronic Whole Effluent Toxicity**. There shall be no chronic toxicity in the effluent discharge.

f. **Total Coliform Organisms.** Effluent total coliform organisms shall not exceed:

   i. 2.2 most probable number (MPN) per 100 mL, as a 7-day median;
   ii. 23 MPN/100 mL, more than once in any 30-day period; and
   iii. 240 MPN/100 mL, at any time.

g. **Diazinon and Chlorpyrifos.** Effluent diazinon and chlorpyrifos concentrations shall not exceed the sum of one (1.0) as identified below:

i. **Average Monthly Effluent Limitation**

$$S_{AMEL} = \frac{C_{D\ AVG}}{0.079} + \frac{C_{C\ AVG}}{0.012} \leq 1.0$$

$C_{D\text{-}avg}$ = average monthly diazinon effluent concentration in µg/L.
$C_{C\text{-}avg}$ = average monthly chlorpyrifos effluent concentration in µg/L.

ii. **Maximum Daily Effluent Limitation**

$$S_{MDEL} = \frac{C_{D\ MAX}}{0.16} + \frac{C_{C\ MAX}}{0.025} \leq 1.0$$

$C_{D\text{-}max}$ = maximum daily diazinon effluent concentration in µg/L.
$C_{C\text{-}max}$ = maximum daily chlorpyrifos effluent concentration in µg/L.

h. **Average Dry Weather Flow**. The average dry weather flow shall not exceed 0.62 MGD.

i. **Methylmercury.** The effluent calendar annual methylmercury load shall not exceed 0.021 grams, in accordance with the Delta Mercury Control Program.

2. Interim Effluent Limitations – Discharge Point 001

The Discharger shall maintain compliance with the following interim effluent limitation at Discharge Point 001, with compliance measured at Monitoring Location EFF-001 as described in the Monitoring and Reporting Program, Attachment E:

a. **Mercury total. Effective immediately and until 30 December 2030**, the effluent calendar year annual total mercury load shall not exceed 10.6 grams/year. This interim effluent limitation shall apply in lieu of the final effluent limitation for methylmercury (Section IV.A.1.i).

B. Land Discharge Specifications – Not Applicable

C. Recycling Specifications – Not Applicable

V. RECEIVING WATER LIMITATIONS

A. Surface Water Limitations

The discharge shall not cause the following in Deuel Drain:

1. **Bacteria**. The fecal coliform concentration, based on a minimum of not less than five samples for any 30-day period, to exceed a geometric mean of 200 MPN/100 mL, nor more than 10 percent of the total number of fecal coliform samples taken during any 30-day period to exceed 400 MPN/100 mL.

2. **Biostimulatory Substances**. Water to contain biostimulatory substances which promote aquatic growths in concentrations that cause nuisance or adversely affect beneficial uses.

3. **Chemical Constituents**. Chemical constituents to be present in concentrations that adversely affect beneficial uses.

4. **Color**. Discoloration that causes nuisance or adversely affects beneficial uses.

5. **Dissolved Oxygen**. The dissolved oxygen concentration to be reduced below 5.0 mg/L at any time.

6. **Floating Material**. Floating material to be present in amounts that cause nuisance or adversely affect beneficial uses.

7. **Oil and Grease**. Oils, greases, waxes, or other materials to be present in concentrations that cause nuisance, result in a visible film or coating on the surface of the water or on objects in the water, or otherwise adversely affect beneficial uses.

8. **pH**. The pH to be depressed below 6.5 nor raised above 8.5.

9. **Pesticides**:

    a. Pesticides to be present, individually or in combination, in concentrations that adversely affect beneficial uses;

    b. Pesticides to be present in bottom sediments or aquatic life in concentrations that adversely affect beneficial uses;

    c. Total identifiable persistent chlorinated hydrocarbon pesticides to be present in the water column at concentrations detectable within the accuracy of analytical methods approved by USEPA or the Executive Officer;

    d. Pesticide concentrations to exceed those allowable by applicable antidegradation policies (see State Water Board Resolution No. 68-16 and 40 CFR 131.12.);

    e. Pesticide concentrations to exceed the lowest levels technically and economically achievable;

    f. Pesticides to be present in concentration in excess of the maximum contaminant levels set forth in CCR, Title 22, division 4, chapter 15; nor

    g. Thiobencarb to be present in excess of 1.0 µg/L.

10. **Radioactivity**:

    a. Radionuclides to be present in concentrations that are harmful to human, plant, animal, or aquatic life nor that result in the accumulation of radionuclides in the food web to an extent that presents a hazard to human, plant, animal, or aquatic life.

    b. Radionuclides to be present in excess of the maximum contaminant levels (MCLs) specified in Table 64442 of section 64442 and Table 64443 of section 64443 of Title 22 of the California Code of Regulations.

11. **Suspended Sediments**. The suspended sediment load and suspended sediment discharge rate of surface waters to be altered in such a manner as to cause nuisance or adversely affect beneficial uses.

12. **Settleable Substances**. Substances to be present in concentrations that result in the deposition of material that causes nuisance or adversely affects beneficial uses.

13. **Suspended Material**. Suspended material to be present in concentrations that cause nuisance or adversely affect beneficial uses.

14. **Taste and Odors**. Taste- or odor-producing substances to be present in concentrations that impart undesirable tastes or odors to fish flesh or other edible products of aquatic origin, or that cause nuisance, or otherwise adversely affect beneficial uses.

15. **Temperature**. The discharge shall not cause the following in Deuel Drain:

    a. The creation of a zone, defined by water temperatures of more than 1ºF above natural receiving water temperature, which exceeds 25 percent of the cross-sectional area of the main river channel at any point.

b. A surface water temperature rise greater than 4ºF above the natural temperature of the receiving water at any time or place.

16. **Toxicity.** Toxic substances to be present, individually or in combination, in concentrations that produce detrimental physiological responses in human, plant, animal, or aquatic life.

17. **Turbidity**

a. Shall not exceed 2 Nephelometric Turbidity Units (NTU) where natural turbidity is less than 1 NTU;

b. Shall not increase more than 1 NTU where natural turbidity is between 1 and 5 NTUs;

c. Shall not increase more than 20 percent where natural turbidity is between 5 and 50 NTUs;

d. Shall not increase more than 10 NTU where natural turbidity is between 50 and 100 NTUs; nor

e. Shall not increase more than 10 percent where natural turbidity is greater than 100 NTUs.

B. Groundwater Limitations

Release of waste constituents from any storage, treatment, or disposal component associated with the wastewater treatment plant, in combination with other sources, shall not cause the following in the underlying groundwater:

1. Adversely impact beneficial uses or exceed water quality objectives.

2. Any constituent concentration, when compared with background, shall not be incrementally increased beyond the current concentration in down gradient wells.

VI. PROVISIONS

A. Standard Provisions

1. The Discharger shall comply with all Standard Provisions included in Attachment D.

2. The Discharger shall comply with the following provisions. In the event that there is any conflict, duplication, or overlap between provisions specified by this Order, the more stringent provision shall apply:

a. If the Discharger's wastewater treatment plant is publicly owned or subject to regulation by California Public Utilities Commission, it shall be supervised and operated by persons possessing certificates of appropriate grade according to Title 23, CCR, division 3, chapter 26.

b. After notice and opportunity for a hearing, this Order may be terminated or modified for cause, including, but not limited to:

i. violation of any term or condition contained in this Order;

ii. obtaining this Order by misrepresentation or by failing to disclose fully all relevant facts;

iii. a change in any condition that requires either a temporary or permanent reduction or elimination of the authorized discharge; and

iv. a material change in the character, location, or volume of discharge.

The causes for modification include:

- *New regulations*. New regulations have been promulgated under section 405(d) of the CWA, or the standards or regulations on which the permit was based have been changed by promulgation of amended standards or regulations or by judicial decision after the permit was issued.
- *Land application plans*. When required by a permit condition to incorporate a land application plan for beneficial reuse of sewage sludge, to revise an existing land application plan, or to add a land application plan.
- *Change in sludge use or disposal practice*. Under 40 CFR 122.62(a)(1), a change in the Discharger's sludge use or disposal practice is a cause for modification of the permit. It is cause for revocation and reissuance if the Discharger requests or agrees.

The Central Valley Water Board may review and revise this Order at any time upon application of any affected person or the Central Valley Water Board's own motion.

c. If a toxic effluent standard or prohibition (including any scheduled compliance specified in such effluent standard or prohibition) is established under section 307(a) of the CWA, or amendments thereto, for a toxic pollutant that is present in the discharge authorized herein, and such standard or prohibition is more stringent than any limitation upon such pollutant in this Order, the Central Valley Water Board will revise or modify this Order in accordance with such toxic effluent standard or prohibition.

   The Discharger shall comply with effluent standards and prohibitions within the time provided in the regulations that establish those standards or prohibitions, even if this Order has not yet been modified.

d. This Order shall be modified, or alternately revoked and reissued, to comply with any applicable effluent standard or limitation issued or approved under sections 301(b)(2)(C) and (D), 304(b)(2), and 307(a)(2) of the CWA, if the effluent standard or limitation so issued or approved:

   i. Contains different conditions or is otherwise more stringent than any effluent limitation in the Order; or

   ii. Controls any pollutant limited in the Order.

   The Order, as modified or reissued under this paragraph, shall also contain any other requirements of the CWA then applicable.

e. The provisions of this Order are severable. If any provision of this Order is found invalid, the remainder of this Order shall not be affected.

f. The Discharger shall take all reasonable steps to minimize any adverse effects to waters of the State or users of those waters resulting from any discharge or sludge use or disposal in violation of this Order. Reasonable steps shall include such accelerated or additional monitoring as necessary to determine the nature and impact of the non-complying discharge or sludge use or disposal.

g. The Discharger shall ensure compliance with any existing or future pretreatment standard promulgated by USEPA under section 307 of the CWA, or amendment thereto, for any discharge to the municipal system.

h. A copy of this Order shall be maintained at the discharge facility and be available at all times to operating personnel. Key operating personnel shall be familiar with its content.

i. Safeguard to electric power failure:

   i. The Discharger shall provide safeguards to assure that, should there be reduction, loss, or failure of electric power, the discharge shall comply with the terms and conditions of this Order.

   ii. Upon written request by the Central Valley Water Board, the Discharger shall submit a written description of safeguards. Such safeguards may include alternate power sources, standby generators, retention capacity, operating procedures, or other means. A description of the safeguards provided shall include an analysis of the frequency, duration, and impact of power failures experienced over the past 5 years on effluent quality and on the capability of the Discharger to comply with the terms and conditions of the Order. The adequacy of the safeguards is subject to the approval of the Central Valley Water Board.

   iii. Should the treatment works not include safeguards against reduction, loss, or failure of electric power, or should the Central Valley Water Board not approve the existing safeguards, the Discharger shall, within 90 days of having been advised in writing by the Central Valley Water Board that the existing safeguards are inadequate, provide to the Central Valley Water Board and USEPA a schedule of compliance for providing safeguards such that in the event of reduction, loss, or failure of electric power, the Discharger shall comply with the terms and conditions of this Order. The schedule of compliance shall, upon approval of the Central Valley Water Board, become a condition of this Order.

j. The Discharger, upon written request of the Central Valley Water Board, shall file with the Board a technical report on its preventive (failsafe) and contingency (cleanup) plans for controlling accidental discharges, and for minimizing the effect of such events. This report may be combined with that required under the Central Valley Water Board Standard Provision contained in section VI.A.2.i of this Order.

   The technical report shall:

   i. Identify the possible sources of spills, leaks, untreated waste by-pass, and contaminated drainage. Loading and storage areas, power outage, waste treatment unit outage, and failure of process equipment, tanks and pipes should be considered.

   ii. Evaluate the effectiveness of present facilities and procedures and state when they became operational.

   iii. Predict the effectiveness of the proposed facilities and procedures and provide an implementation schedule containing interim and final dates when they will be constructed, implemented, or operational.

   The Central Valley Water Board, after review of the technical report, may establish conditions which it deems necessary to control accidental discharges and to minimize the effects of such events. Such conditions shall be incorporated as part of this Order, upon notice to the Discharger.

k. A publicly owned treatment works whose waste flow has been increasing, or is projected to increase, shall estimate when flows will reach hydraulic and treatment capacities of its treatment and disposal facilities. The projections shall be made in January, based on the last 3 years' average dry weather flows, peak wet weather flows and total annual flows, as appropriate. When any projection shows that capacity of any part of the facilities may be exceeded in 4 years, the Discharger shall notify the Central Valley Water Board by 31 January. A copy of the notification shall be sent to appropriate local elected officials, local permitting agencies and the press. Within 120 days of the notification, the Discharger shall submit a technical report showing how it will prevent flow volumes from exceeding capacity or how it will increase capacity to handle the larger flows. The Central Valley Water Board may extend the time for submitting the report.

l. The Discharger shall submit technical reports as directed by the Executive Officer. All technical reports required herein that involve planning, investigation, evaluation, or design, or other work requiring interpretation and proper application of engineering or geologic sciences, shall be prepared by or under the direction of persons registered to practice in California pursuant to California Business and Professions Code, sections 6735, 7835, and 7835.1. To demonstrate compliance with Title 16, CCR, sections 415 and 3065, all technical reports must contain a statement of the qualifications of the responsible registered professional(s). As required by these laws, completed technical reports must bear the signature(s) and seal(s) of the registered professional(s) in a manner such that all work can be clearly attributed to the professional responsible for the work.

m. The Central Valley Water Board is authorized to enforce the terms of this permit under several provisions of the Water Code, including, but not limited to, sections 13385, 13386, and 13387.

n. For publicly owned treatment works, prior to making any change in the point of discharge, place of use, or purpose of use of treated wastewater that results in a permanent decrease of flow in any portion of a watercourse, the Discharger must file a petition with the State Water Board, Division of Water Rights, and receive approval for such a change. (Water Code section 1211).

o. Failure to comply with provisions or requirements of this Order, or violation of other applicable laws or regulations governing discharges from this facility, may subject the Discharger to administrative or civil liabilities, criminal penalties, and/or other enforcement remedies to ensure compliance. Additionally, certain violations may subject the Discharger to civil or criminal enforcement from appropriate local, state, or federal law enforcement entities.

p. In the event the Discharger does not comply or will be unable to comply for any reason, with any prohibition, maximum daily effluent limitation**,** hourly average effluent limitation, or receiving water limitation of this Order, the Discharger shall notify the Central Valley Water Board by telephone (916) 464-3291 within 24 hours of having knowledge of such noncompliance, and shall confirm this notification in writing within five days, unless the Central Valley Water Board waives confirmation. The written notification shall state the nature, time, duration, and cause of noncompliance, and shall describe the measures being taken to remedy the current noncompliance and prevent recurrence including, where applicable, a schedule of implementation. Other noncompliance requires written notification as above at the time of the normal monitoring report.

B. Monitoring and Reporting Program (MRP) Requirements

The Discharger shall comply with the MRP, and future revisions thereto, in Attachment E.

C. Special Provisions

1. Reopener Provisions

a. Conditions that necessitate a major modification of a permit are described in 40 CFR 122.62, including, but not limited to:

i. If new or amended applicable water quality standards are promulgated or approved pursuant to section 303 of the CWA, or amendments thereto, this permit may be reopened and modified in accordance with the new or amended standards.

ii. When new information, that was not available at the time of permit issuance, would have justified different permit conditions at the time of issuance.

b. This Order may be reopened for modification, or revocation and reissuance, as a result of the detection of a reportable priority pollutant generated by special conditions included in this Order. These special conditions may be, but are not limited to, fish tissue sampling, whole effluent toxicity, monitoring requirements on internal waste stream(s), and monitoring for surrogate parameters. Additional requirements may be included in this Order as a result of the special condition monitoring data.

c. **Mercury**. The Basin Plan's Delta Mercury Control Program was designed to proceed in two phases. After Phase 1, the Central Valley Water Board will conduct a Phase 1 Delta Mercury Control Program Review that considers modification to the Delta Mercury Control Program. This Order may be reopened to address changes to the Delta Mercury Control Program.

d. **Bay-Delta Plan South Delta Salinity Objectives Update**. The State Water Board is currently in the process of updating the South Delta Salinity Objectives contained in the Bay-Delta Plan. The updated salinity objectives may result in needed changes to the salinity requirements of this Order. Therefore, this Order may be reopened to modify salinity requirements, as appropriate, in accordance with changes to the Bay-Delta Plan.

e. **Pollution Prevention.** This Order requires the Discharger to prepare and implement a pollution prevention plan following Water Code section 13263.3(d)(3) for mercury. Based on a review of the pollution prevention plan, this Order may be reopened for addition and/or modification of effluent limitations and requirements for mercury.

f. **Whole Effluent Toxicity**. As a result of a Toxicity Reduction Evaluation (TRE), this Order may be reopened to include a numeric chronic toxicity limitation, a new acute toxicity limitation, and/or a limitation for a specific toxicant identified in the TRE. Additionally, if the State Water Board revises the SIP's toxicity control provisions that would require the establishment of numeric chronic toxicity effluent limitations, this Order may be reopened to include a numeric chronic toxicity effluent limitation based on the new provisions.

g. **Water Effects Ratios (WER) and Metal Translators.** A default WER of 1.0 has been used in this Order for calculating criteria for applicable inorganic constituents. In addition, default dissolved-to-total metal translators have been used to convert water quality objectives from dissolved to total recoverable when developing effluent

limitations for inorganic constituents. If the Discharger performs studies to determine site-specific WERs and/or site-specific dissolved-to-total metal translators, this Order may be reopened to modify the effluent limitations for the applicable inorganic constituents.

h. **Drinking Water Policy.** On 26 July 2013 the Central Valley Water Board adopted Resolution No. R5-2013-0098 amending the Basin Plan and establishing a Drinking Water Policy. The State Water Board will consider adoption of the Drinking Water Policy at a future meeting. This Order may be reopened to incorporate monitoring of drinking water constituents to implement the Drinking Water Policy.

i. **Ultraviolet Light (UV) Disinfection Operating Specifications**. The UV operating specifications in this Order are based on the UV guidelines developed by the National Water Research Institute and American Water Works Association Research Foundation titled, "*Ultraviolet Disinfection Guidelines for Drinking Water and Water Reuse*." If the Discharger conducts a site-specific UV Engineering Study that identifies site-specific UV operating specifications that will achieve the virus inactivation equivalent to Title 22 disinfected tertiary recycled water, this Order may be reopened to modify the UV operating requirements.

j. **Diazinon and Chlorpyrifos Basin Plan Amendment.** Central Valley Water Board staff is developing a Basin Plan Amendment to provide an implementation plan for NPDES-permitted domestic wastewater dischargers. This Order may be reopened to modify diazinon and chlorpyrifos effluent limitations, as appropriate, in accordance with an amendment to the Basin Plan.

2. Special Studies, Technical Reports and Additional Monitoring Requirements

a. **Whole Effluent Toxicity**. For compliance with the Basin Plan's narrative toxicity objective, this Order requires the Discharger to conduct chronic whole effluent toxicity (WET) testing, as specified in MRP section V. Furthermore, this Provision requires the Discharger to investigate the causes of, and identify corrective actions to reduce or eliminate effluent toxicity. If the discharge exceeds the numeric toxicity monitoring trigger during accelerated monitoring established in this Provision, the Discharger is required to initiate a TRE in accordance with an approved TRE Work Plan, and take actions to mitigate the impact of the discharge and prevent recurrence of toxicity. A TRE is a site-specific study conducted in a stepwise process to identify the source(s) of toxicity and the effective control measures for effluent toxicity. TREs are designed to identify the causative agents and sources of whole effluent toxicity, evaluate the effectiveness of the toxicity control options, and confirm the reduction in effluent toxicity. This Provision includes procedures for accelerated chronic toxicity monitoring and TRE initiation.

i. **Accelerated Monitoring and TRE Initiation.** When the numeric toxicity monitoring trigger is exceeded during regular chronic toxicity monitoring, and the testing meets all test acceptability criteria, the Discharger shall initiate accelerated monitoring as required in the Accelerated Monitoring Specifications. The Discharger shall initiate a TRE to address effluent toxicity if any WET testing results exceed the numeric toxicity monitoring trigger during accelerated monitoring.

ii. **Numeric Toxicity Monitoring Trigger.** The numeric toxicity monitoring trigger to initiate a TRE is > 1TUc (where TUc = 100/NOEC). The monitoring trigger is not an effluent limitation; it is the toxicity threshold at which the Discharger is required to begin accelerated monitoring and initiate a TRE.

iii. **Accelerated Monitoring Specifications.** If the numeric toxicity monitoring trigger is exceeded during regular chronic toxicity testing, the Discharger shall initiate accelerated monitoring within 14-days of notification by the laboratory of the exceedance. Accelerated monitoring shall consist of four chronic toxicity tests conducted once every two weeks using the species that exhibited toxicity. The following protocol shall be used for accelerated monitoring and TRE initiation:

(a) If the results of four consecutive accelerated monitoring tests do not exceed the monitoring trigger, the Discharger may cease accelerated monitoring and resume regular chronic toxicity monitoring. However, notwithstanding the accelerated monitoring results, if there is adequate evidence of effluent toxicity, the Executive Officer may require that the Discharger initiate a TRE.

(b) If the source(s) of the toxicity is easily identified (e.g., temporary plant upset), the Discharger shall make necessary corrections to the facility and shall continue accelerated monitoring until four consecutive accelerated tests do not exceed the monitoring trigger. Upon confirmation that the effluent toxicity has been removed, the Discharger may cease accelerated monitoring and resume regular chronic toxicity monitoring.

(c) If the result of any accelerated toxicity test exceeds the monitoring trigger, the Discharger shall cease accelerated monitoring and begin a TRE to investigate the cause(s) of, and identify corrective actions to reduce or eliminate effluent toxicity. Within thirty (30) days of notification by the laboratory of any test result exceeding the monitoring trigger during accelerated monitoring, the Discharger shall submit a TRE Action Plan to the Central Valley Water Board including, at minimum:

(1) Specific actions the Discharger will take to investigate and identify the cause(s) of toxicity, including a TRE WET monitoring schedule;

(2) Specific actions the Discharger will take to mitigate the impact of the discharge and prevent the recurrence of toxicity; and

(3) A schedule for these actions.

b. **Phase I Methylmercury Control Study**. In accordance with the Basin Plan's Delta Mercury Control Program and the compliance schedule included in this Order for methylmercury (Section VI.C.7.a), the Discharger is required to develop a Phase 1 Methylmercury Control Study to evaluate existing control methods and, as needed, develop additional control methods that could be implemented to achieve the methylmercury waste load allocation. A work plan was submitted by the Discharger in June 2012. The study work plan will be reviewed by a Technical Advisory Committee (TAC) and approved by the Executive Officer. The work plan shall be implemented immediately after approval by the Executive Officer, and a progress report shall be submitted by **20 October 2015.**

The Study shall evaluate the feasibility of reducing sources more than the minimum amount needed to achieve the methylmercury allocation. The Study also may include an evaluation of innovative actions, watershed approaches, offsets projects, and other short and long-term actions that result in reducing inorganic (total) mercury and methylmercury to address the accumulation of methylmercury in fish tissue and to reduce methylmercury exposure. The Study may evaluate the effectiveness of using inorganic (total) mercury controls to control methylmercury discharges.

The Study shall include a description of methylmercury and/or inorganic (total) mercury management practices identified in Phase 1; an evaluation of the effectiveness, costs, potential environmental effects, and overall feasibility of the control actions. The Study shall also include proposed implementation plans and schedules to comply with methylmercury allocations as soon as possible. The Study shall be submitted to the Central Valley Water Board by **20 October 2018.**

The Executive Officer may, after public notice, extend the due date up to 2 years if the Discharger demonstrates it is making significant progress towards developing, implementing and/or completing the Study and reasonable attempts have been made to secure funding for the Study, but the Discharger has experienced severe budget shortfalls.

3. Best Management Practices and Pollution Prevention

a. **Pollution Prevention Plan (PPP) for Mercury**. The Discharger submitted a PPP for mercury dated 20 April 2012 in accordance with the Delta Mercury Control Program. The Discharger shall continue to implement the PPP and annual progress reports shall be submitted in accordance with the Monitoring and Reporting Program (Attachment E, section X.D.1.). The progress reports shall discuss the effectiveness of the PPP in the reduction of mercury in the discharge, include a summary of mercury and methylmercury monitoring results, and discuss updates to the PPP.

b. **Mercury Exposure Reduction Program (MERP)**. The Discharger shall participate in an MERP in accordance with the Basin Plan's Delta Mercury Control Program. By letter dated 13 May 2013, the Discharger elected to provide financial support in the collective MERP with other Delta dischargers, rather than be individually responsible for any MERP activities. An exposure reduction work plan for Executive Officer approval was submitted on 20 October 2013. The objective of the Exposure Reduction Program is to reduce mercury exposure of Delta fish consumers most likely affected by mercury. The work plan shall address the Exposure Reduction Program objective, elements, and the Discharger's coordination with other stakeholders. The minimum requirements for the exposure reduction work plan are outlined in the Fact Sheet (Attachment F, section VI.B.3.b). The Discharger shall

integrate or, at minimum, provide good-faith opportunities for integration of community-based organizations, tribes, and consumers of Delta fish into planning, decision making, and implementation of exposure reduction activities. The Discharger shall continue to participate in the group effort to implement the work plan.

c. **Salinity Evaluation and Minimization Plan**. The Discharger shall prepare a Salinity Evaluation and Minimization Plan to identify and address sources of salinity from the Facility. The plan shall be completed and submitted to the Central Valley Water Board by **1 December 2014** for the approval by the Executive Officer.

4. Construction, Operation and Maintenance Specifications

a. The treatment facilities shall be designed, constructed, operated, and maintained to prevent inundation or washout due to floods with a 100-year return frequency.

b. **Filtration System Operating Specifications.** To ensure the filtration system is operating properly to provide adequate disinfection of the wastewater, the turbidity of the filter effluent measured at Monitoring Location UVS-001 shall not exceed:

i. 0.2 NTU more than 5 percent of the time within a 24-hour period, and
ii. 0.5 NTU at any time.

c. **Ultraviolet Light (UV) Disinfection System Operating Specifications.** The UV disinfection system must be operated in accordance with an operations and maintenance program that assures adequate disinfection, and shall meet the following minimum specifications to provide virus inactivation equivalent to Title 22 Disinfected Tertiary Recycled Water:

i. **UV Dose**. The minimum hourly average UV dose in the UV reactor shall be 80 millijoules per square centimeter (mJ/cm^2).

ii. **UV Transmittance.** The minimum hourly average UV transmittance (at 254 nanometers) in the wastewater measured at Monitoring Location UVS-001 shall not fall below 65 percent.

iii. The lamp sleeves and cleaning system components must be visually inspected per the manufacturer's operations manual for physical wear (scoring, solarization, seal leaks, cleaning fluid levels, etc.) and to check the efficacy of the cleaning system.

iv. The lamp sleeves must be cleaned periodically as necessary to meet the UV dose requirements.

v. Lamps must be replaced per the manufacturer's operations manual, or sooner, if there are indications the lamps are failing to provide adequate disinfection. Lamp age and lamp replacement records must be maintained.

5. Special Provisions for Municipal Facilities (POTWs Only)

a. **Sludge/Biosolids Treatment or Discharge Specifications.** Sludge in this document means the solid, semisolid, and liquid residues removed during primary, secondary, or advanced wastewater treatment processes. Solid waste refers to grit and screening material generated during preliminary treatment. Residual sludge means sludge that will not be subject to further treatment at the wastewater treatment plant. Biosolids refer to sewage that has been treated and tested and shown to be capable of being beneficially and legally used pursuant to federal and state regulations as a soil amendment for agricultural, silvicultural, horticultural, and land reclamation activities as specified under 40 CFR Part 503.

i. Collected screenings, residual sludge, biosolids, and other solids removed from liquid wastes shall be disposed of in a manner approved by the Executive Officer, and consistent with *Consolidated Regulations for Treatment, Storage, Processing, or Disposal of Solid Waste*, as set forth in Title 27, CCR, division 2, subdivision 1, section 20005, et seq. Removal for further treatment, storage, disposal, or reuse at sites (e.g., landfill, composting sites, soil amendment sites) that are operated in accordance with valid waste discharge requirements issued by a Regional Water Board will satisfy these specifications.

Sludge and solid waste shall be removed from screens, sumps, ponds, clarifiers, etc., as needed to ensure optimal plant performance.

The treatment of sludge generated at the Facility shall be confined to the Facility property and conducted in a manner that precludes infiltration of waste constituents into soils in a mass or concentration that will violate groundwater limitations in section V.B. of this Order. In addition, the storage of residual sludge, solid waste, and biosolids on Facility property shall be temporary and controlled, and contained in a manner that minimizes leachate formation and precludes infiltration of waste constituents into soils in a mass or concentration that will violate groundwater limitations included in section V.B. of this Order.

ii. The use, disposal, storage, and transportation of biosolids shall comply with existing federal and state laws and regulations, including permitting requirements and technical standards included in 40 CFR Part 503. If the State Water Board and the Central Valley Water Board are given the authority to implement regulations contained in 40 CFR Part 503, this Order may be reopened to incorporate appropriate time schedules and technical standards. The Discharger must comply with the standards and time schedules contained in 40 CFR Part 503 whether or not they have been incorporated into this Order.

iii. The Discharger shall comply with Section IX.A. Biosolids of the Monitoring and Reporting Program, Attachment E.

iv. Any proposed change in biosolids use or disposal practice from a previously approved practice shall be reported to the Executive Officer and USEPA Regional Administrator at least **90 days** in advance of the change.

v. **Within 180 days of the permit effective date,** the Discharger shall submit a biosolids use or disposal plan to the Central Valley Water Board. The plan shall describe at a minimum:

(a) Sources and amounts of biosolids generated annually.

(b) Location(s) of on-site storage and description of the containment area.

(c) Plans for ultimate disposal. For landfill disposal, include the present classification of the landfill and the name and location of the landfill.

b. **Biosolids Storage and Transportation Specifications**

Biosolids shall be considered to be “stored” if they are placed on the ground or in non-mobile containers (i.e., not in a truck or trailer) at an intermediate storage location away from the generator/processing for more than 48 hours. Biosolids shall be considered to be “staged” if placed on the ground for brief periods of time solely to facilitate transfer of the biosolids between transportation and application vehicles.

i. Biosolids shall not be stored directly on the ground at any one location for more than seven (7) consecutive days.

ii. Facilities for the storage of Class B biosolids shall be located, designed and maintained to restrict public access to biosolids.

iii. Biosolids storage facilities shall be designed and maintained to prevent washout or inundation from a storm or flood with a return frequency of 100 years. This requirement shall not apply to the solar drying of biosolids during the non-flood season (April through October), provided that biosolids are removed and disposed of prior to 1 November of each year.

iv. Biosolids storage facilities, which contain biosolids, shall be designed and maintained to contain all storm water falling on the biosolids storage area during a rainfall year with a return frequency of 100 years.

v. Biosolids placed on site for more than 24 hours shall be covered.

vi. Biosolids storage facilities shall be designed, maintained and operated to minimize the generation of leachate and the effects of erosion.

vii. If biosolids are to be stored at the site, a plan describing the storage program and means of complying with the specifications contained in sections VI.C.5.a of this Order shall be submitted for the Central Valley Water Board's staff approval. The storage plan shall also include an adverse weather plan.

viii. The Discharger shall operate the biosolids storage facilities in accordance with the approved biosolids storage plan.

ix. The Discharger shall immediately remove and relocate any biosolids stored on site in violation of this Order.

c. **Collection System**. The Discharger's collection system is part of the system that is subject to this Order. As such, the Discharger must properly operate and maintain its collection system (40 CFR § 122.41(e)). The Discharger must report any non-compliance (40 CFR § 122.41(l)(6) and (7)) and mitigate any discharge from the collection system in violation of this Order (40 CFR § 122.41(d)). See the Order at Standard Provision VI.A.2.c and Attachment D, subsections I.D, V.E, V.H, and I.C.

6. Other Special Provisions

a. Wastewater shall be oxidized, coagulated, filtered, and adequately disinfected pursuant to the Department of Public Health (DPH; formerly the Department of Health Services) reclamation criteria, CCR, Title 22, division 4, chapter 3, (Title 22), or equivalent.

7. Compliance Schedules

a. **Compliance Schedules for Final Effluent Limitations for Methylmercury.** This Order requires compliance with the final effluent limitations for methylmercury by **31 December 2030**. The Discharger shall comply with the following time schedule to ensure compliance with the final effluent limitations:

Task	Date Due
Phase 1	
i. Submit Phase 1 Methylmercury Control Study Work Plan	**Submitted**
ii. Submit Pollution Prevention Plan (PPP)[1] for Mercury (per Section VI.C.3.a)	**Submitted**
iii. Implement Phase 1 Methylmercury Control Study Work Plan	**Immediately following Executive Officer Approval**
iv. Annual Progress Reports[2]	**30 January, annually**
v. Submit Phase 1 Methylmercury Control Study Progress Report	**20 October 2015**
vi. Submit Final Phase 1 Methylmercury Control Study	**20 October 2018[3]**
Phase 2	
vii. Implement methylmercury control programs	**TBD[4]**
viii. Full Compliance	**31 December 2030[3]**

1 The PPP for mercury shall continue to be implemented in accordance with Section VI.C.3.a.

2 Beginning 30 January 2015, and annually thereafter until the Facility achieves compliance with the final effluent limitations for methylmercury, the Discharger shall submit annual progress reports on pollution minimization activities implemented and evaluation of their effectiveness, including a summary of total mercury and methylmercury monitoring results.

3 The Executive Officer may, after public notice, extend the due date for the Final Phase 1 Methylmercury Control Study up to 2 years if the Discharger demonstrates it is making significant progress towards developing, implementing and/or completing the Study and reasonable attempts have been made to secure funding for the Study, but the Discharger has experienced severe budget shortfalls.

4 To be determined. Following Phase 1 the Central Valley Water Board will conduct a Phase 1 Delta Mercury Control Program Review that considers: modification of methylmercury goals, objectives, allocations, final compliance date, etc. Consequently, the start of Phase 2 and the final compliance date is uncertain at the time this Order was adopted.

VII. COMPLIANCE DETERMINATION

A. BOD_5 and TSS Effluent Limitations (Section IV.A.1.a and IV.A.1.b). Compliance with the final effluent limitations for BOD_5 and TSS required in Limitations and Discharge Requirements section IV.A.1.a shall be ascertained by 24-hour composite samples. Compliance with effluent limitations required in Limitations and Discharge Requirements section IV.A.1.b for percent removal shall be calculated using the arithmetic mean of BOD_5 and TSS in effluent samples collected over a monthly period as a percentage of the arithmetic mean of the values for influent samples collected at approximately the same times during the same period.

B. Total Mercury Mass Loading Effluent Limitations (Section IV.A.2.a). The procedures for calculating mass loadings are as follows:

1. The total pollutant mass load for each individual calendar month shall be determined using an average of all concentration data collected that month and the corresponding total monthly flow. All effluent monitoring data collected under the monitoring and reporting program, pretreatment program, and any special studies shall be used for these calculations. The total annual mass loading shall be the sum of the individual calendar months.
2. In calculating compliance, the Discharger shall count all non-detect measures at one-half of the detection level. If compliance with the effluent limitation is not attained due to the non-detect contribution, the Discharger shall improve and implement available analytical capabilities and compliance shall be evaluated with consideration of the detection limits.

C. Average Dry Weather Flow Effluent Limitations (Section IV.A.1.h). The average dry weather discharge flow represents the daily average flow when groundwater is at or near normal and runoff is not occurring. Compliance with the average dry weather flow effluent limitations will be determined annually based on the average daily flow over three consecutive dry weather months (e.g., July, August, and September).

D. Total Coliform Organisms Effluent Limitations (Section IV.A.1.f). For each day that an effluent sample is collected and analyzed for total coliform organisms, the 7-day median shall be determined by calculating the median concentration of total coliform bacteria in the effluent utilizing the bacteriological results of the last 7 days. For example, if a sample is collected on a Wednesday, the result from that sampling event and all results from the previous 6 days (i.e., Tuesday, Monday, Sunday, Saturday, Friday, and Thursday) are used to calculate the 7-day median. If the 7-day median of total coliform organisms exceeds a most probable number (MPN) of 2.2 per 100 milliliters, the Discharger will be considered out of compliance.

E. Mass Effluent Limitations. The mass effluent limitations contained in the Final Effluent Limitations IV.A.1.a are based on the permitted average dry weather flow and calculated as follows:

Mass (lbs/day) = Flow (MGD) x Concentration (mg/L) x 8.34 (conversion factor)

If the effluent flow exceeds the permitted average dry weather flow during wet-weather seasons, the effluent mass limitations contained in Final Effluent Limitations IV.A.1.a shall not apply. If the effluent flow is below the permitted average dry weather flow during wet-weather seasons, the effluent mass limitations do apply.

F. Priority Pollutant Effluent Limitations. Compliance with effluent limitations for priority pollutants shall be determined in accordance with Section 2.4.5 of the SIP, as follows:

1. Dischargers shall be deemed out of compliance with an effluent limitation, if the concentration of the priority pollutant in the monitoring sample is greater than the effluent limitation and greater than or equal to the reporting level (RL).
2. Dischargers shall be required to conduct a Pollutant Minimization Program (PMP) in accordance with section 2.4.5.1 of the SIP when there is evidence that the priority pollutant is present in the effluent above an effluent limitation and either:
   a. A sample result is reported as detected, but not quantified (DNQ) and the effluent limitation is less than the RL; or
   b. A sample result is reported as non-detect (ND) and the effluent limitation is less than the method detection limit (MDL).
3. When determining compliance with an average monthly effluent limitation (AMEL) and more than one sample result is available in a month, the discharger shall compute the arithmetic mean unless the data set contains one or more reported determinations of DNQ or ND. In those cases, the discharger shall compute the median in place of the arithmetic mean in accordance with the following procedure:
   a. The data set shall be ranked from low to high, reported ND determinations lowest, DNQ determinations next, followed by quantified values (if any). The order of the individual ND or DNQ determinations is unimportant.
   b. The median value of the data set shall be determined. If the data set has an odd number of data points, then the median is the middle value. If the data set has an even number of data points, then the median is the average of the two values around the middle unless one or both of the points are ND or DNQ, in which case the median value shall be the lower of the two data points where DNQ is lower than a value and ND is lower than DNQ.
4. If a sample result, or the arithmetic mean or median of multiple sample results, is below the RL, and there is evidence that the priority pollutant is present in the effluent above an effluent limitation and the discharger conducts a PMP (as described in section 2.4.5.1), the discharger shall <u>not</u> be deemed out of compliance.

G. Chlorpyrifos and Diazinon Effluent Limitations (Section IV.A.1.g). Compliance shall be determined by calculating the sum (S), as provided in this Order, with analytical results that are reported as “non - detectable” concentrations to be considered to be zero.

H. Temperature Effluent Limitation (Section IV.A.1.d). For every day receiving water temperature samples are collected at RSW-001, compliance with the final effluent limitations for temperature shall be ascertained using the daily average effluent temperature at Monitoring Location EFF-001 and the daily average temperature of the receiving water measured on the same day at Monitoring Location RSW-001.

I. Chronic Whole Effluent Toxicity Effluent Limitation (Section IV.A.1.e). Compliance with the accelerated monitoring and TRE provisions of Provision VI.C.2.a shall constitute compliance with the effluent limitation.

J. Use of Delta Regional Monitoring Program and other Receiving Water Data to Determine Compliance with Receiving Water Limitations. Delta Regional Monitoring Program data and other receiving water monitoring data that is not specifically required to be conducted by the Discharger under this permit, will not be used directly to determine that the discharge is in violation of this Permit. The Discharger may, however, conduct any site-specific receiving water monitoring deemed appropriate by the Discharger that is not conducted by the Delta RMP and submit that monitoring data. As described in Section VIII of

Attachment E, such data may be used, if scientifically defensible, in conjunction with other receiving water data, effluent data, receiving water flow data, and other pertinent information to determine whether or not a discharge is in compliance with this Permit.

ATTACHMENT A – DEFINITIONS

Arithmetic Mean (μ)
Also called the average, is the sum of measured values divided by the number of samples. For ambient water concentrations, the arithmetic mean is calculated as follows:

Arithmetic mean = $\mu = \Sigma x / n$ where: Σx is the sum of the measured ambient water concentrations, and n is the number of samples.

Average Monthly Effluent Limitation (AMEL)
The highest allowable average of daily discharges over a calendar month, calculated as the sum of all daily discharges measured during a calendar month divided by the number of daily discharges measured during that month.

Average Weekly Effluent Limitation (AWEL)
The highest allowable average of daily discharges over a calendar week (Sunday through Saturday), calculated as the sum of all daily discharges measured during a calendar week divided by the number of daily discharges measured during that week.

Bioaccumulative
Those substances taken up by an organism from its surrounding medium through gill membranes, epithelial tissue, or from food and subsequently concentrated and retained in the body of the organism.

Carcinogenic
Pollutants are substances that are known to cause cancer in living organisms.

Coefficient of Variation (CV)
CV is a measure of the data variability and is calculated as the estimated standard deviation divided by the arithmetic mean of the observed values.

Daily Discharge
Daily Discharge is defined as either: (1) the total mass of the constituent discharged over the calendar day (12:00 am through 11:59 pm) or any 24-hour period that reasonably represents a calendar day for purposes of sampling (as specified in the permit), for a constituent with limitations expressed in units of mass or; (2) the unweighted arithmetic mean measurement of the constituent over the day for a constituent with limitations expressed in other units of measurement (e.g., concentration).

The daily discharge may be determined by the analytical results of a composite sample taken over the course of one day (a calendar day or other 24-hour period defined as a day) or by the arithmetic mean of analytical results from one or more grab samples taken over the course of the day.

For composite sampling, if 1 day is defined as a 24-hour period other than a calendar day, the analytical result for the 24-hour period will be considered as the result for the calendar day in which the 24-hour period ends.

Detected, but Not Quantified (DNQ)
DNQ are those sample results less than the RL, but greater than or equal to the laboratory's MDL. Sample results reported as DNQ are estimated concentrations.

Dilution Credit
Dilution Credit is the amount of dilution granted to a discharge in the calculation of a water quality-based effluent limitation, based on the allowance of a specified mixing zone. It is calculated from the dilution ratio or determined through conducting a mixing zone study or modeling of the discharge and receiving water.

Effluent Concentration Allowance (ECA)
ECA is a value derived from the water quality criterion/objective, dilution credit, and ambient background concentration that is used, in conjunction with the coefficient of variation for the effluent monitoring data, to calculate a long-term average (LTA) discharge concentration. The ECA has the same meaning as waste load allocation (WLA) as used in U.S. EPA guidance (Technical Support Document For Water Quality-based Toxics Control, March 1991, second printing, EPA/505/2-90-001).

Enclosed Bays
Enclosed Bays means indentations along the coast that enclose an area of oceanic water within distinct headlands or harbor works. Enclosed bays include all bays where the narrowest distance between the headlands or outermost harbor works is less than 75 percent of the greatest dimension of the enclosed portion of the bay. Enclosed bays include, but are not limited to, Humboldt Bay, Bodega Harbor, Tomales Bay, Drake's Estero, San Francisco Bay, Morro Bay, Los Angeles-Long Beach Harbor, Upper and Lower Newport Bay, Mission Bay, and San Diego Bay. Enclosed bays do not include inland surface waters or ocean waters.

Estimated Chemical Concentration
The estimated chemical concentration that results from the confirmed detection of the substance by the analytical method below the ML value.

Estuaries
Estuaries means waters, including coastal lagoons, located at the mouths of streams that serve as areas of mixing for fresh and ocean waters. Coastal lagoons and mouths of streams that are temporarily separated from the ocean by sandbars shall be considered estuaries. Estuarine waters shall be considered to extend from a bay or the open ocean to a point upstream where there is no significant mixing of fresh water and seawater. Estuarine waters included, but are not limited to, the Sacramento-San Joaquin Delta, as defined in Water Code section 12220, Suisun Bay, Carquinez Strait downstream to the Carquinez Bridge, and appropriate areas of the Smith, Mad, Eel, Noyo, Russian, Klamath, San Diego, and Otay rivers. Estuaries do not include inland surface waters or ocean waters.

Inland Surface Waters
All surface waters of the state that do not include the ocean, enclosed bays, or estuaries.

Instantaneous Maximum Effluent Limitation
The highest allowable value for any single grab sample or aliquot (i.e., each grab sample or aliquot is independently compared to the instantaneous maximum limitation).

Instantaneous Minimum Effluent Limitation
The lowest allowable value for any single grab sample or aliquot (i.e., each grab sample or aliquot is independently compared to the instantaneous minimum limitation).

Maximum Daily Effluent Limitation (MDEL)
The highest allowable daily discharge of a pollutant, over a calendar day (or 24-hour period). For pollutants with limitations expressed in units of mass, the daily discharge is calculated as the total mass of the pollutant discharged over the day. For pollutants with limitations expressed in other units of measurement, the daily discharge is calculated as the arithmetic mean measurement of the pollutant over the day.

Median
The middle measurement in a set of data. The median of a set of data is found by first arranging the measurements in order of magnitude (either increasing or decreasing order). If the number of measurements (n) is odd, then the median = $X_{(n+1)/2}$. If n is even, then the median = $(X_{n/2} + X_{(n/2)+1})/2$ (i.e., the midpoint between the n/2 and n/2+1).

Method Detection Limit (MDL)
MDL is the minimum concentration of a substance that can be measured and reported with 99 percent confidence that the analyte concentration is greater than zero, as defined in in 40 CFR part 136, Attachment B, revised as of July 3, 1999.

Minimum Level (ML)
ML is the concentration at which the entire analytical system must give a recognizable signal and acceptable calibration point. The ML is the concentration in a sample that is equivalent to the concentration of the lowest calibration standard analyzed by a specific analytical procedure, assuming that all the method specified sample weights, volumes, and processing steps have been followed.

Mixing Zone
Mixing Zone is a limited volume of receiving water that is allocated for mixing with a wastewater discharge where water quality criteria can be exceeded without causing adverse effects to the overall water body.

Not Detected (ND)
Sample results which are less than the laboratory's MDL.

Ocean Waters
The territorial marine waters of the State as defined by California law to the extent these waters are outside of enclosed bays, estuaries, and coastal lagoons. Discharges to ocean waters are regulated in accordance with the State Water Board's California Ocean Plan.

Persistent Pollutants
Persistent pollutants are substances for which degradation or decomposition in the environment is nonexistent or very slow.

Pollutant Minimization Program (PMP)
PMP means waste minimization and pollution prevention actions that include, but are not limited to, product substitution, waste stream recycling, alternative waste management methods, and education of the public and businesses. The goal of the PMP shall be to reduce all potential sources of a priority pollutant(s) through pollutant minimization (control) strategies, including pollution prevention measures as appropriate, to maintain the effluent concentration at or below the water quality-based effluent limitation. Pollution prevention measures may be particularly appropriate for persistent bioaccumulative priority pollutants where there is evidence that beneficial uses are being impacted. The Central Valley Water Board may consider cost effectiveness when establishing the requirements of a PMP. The completion and implementation of a Pollution Prevention Plan, if required pursuant to Water Code section 13263.3(d), shall be considered to fulfill the PMP requirements.

Pollution Prevention
Pollution Prevention means any action that causes a net reduction in the use or generation of a hazardous substance or other pollutant that is discharged into water and includes, but is not limited to, input change, operational improvement, production process change, and product reformulation (as defined in Water Code section 13263.3). Pollution prevention does not include actions that merely shift a pollutant in wastewater from one environmental medium to another environmental medium, unless clear environmental benefits of such an approach are identified to the satisfaction of the State Water Resources Control Board (State Water Board) or Central Valley Water Board.

Satellite Collection System
The portion, if any, of a sanitary sewer system owned or operated by a different public agency than the agency that owns and operates the wastewater treatment facility that a sanitary sewer system is tributary to.

Source of Drinking Water
Any water designated as municipal or domestic supply (MUN) in a Central Valley Water Board Basin Plan.

Standard Deviation (σ)
Standard Deviation is a measure of variability that is calculated as follows:

$$\sigma = (\sum[(x - \mu)^2]/(n - 1))^{0.5}$$

where:
x is the observed value;
μ is the arithmetic mean of the observed values; and
n is the number of samples.

Toxicity Reduction Evaluation (TRE)
TRE is a study conducted in a step-wise process designed to identify the causative agents of effluent or ambient toxicity, isolate the sources of toxicity, evaluate the effectiveness of toxicity control options, and then confirm the reduction in toxicity. The first steps of the TRE consist of the collection of data relevant to the toxicity, including additional toxicity testing, and an evaluation of facility operations and maintenance practices, and best management practices. A Toxicity Identification Evaluation (TIE) may be required as part of the TRE, if appropriate. (A TIE is a set of procedures to identify the specific chemical(s) responsible for toxicity. These procedures are performed in three phases (characterization, identification, and confirmation) using aquatic organism toxicity tests.)

ATTACHMENT B – MAP

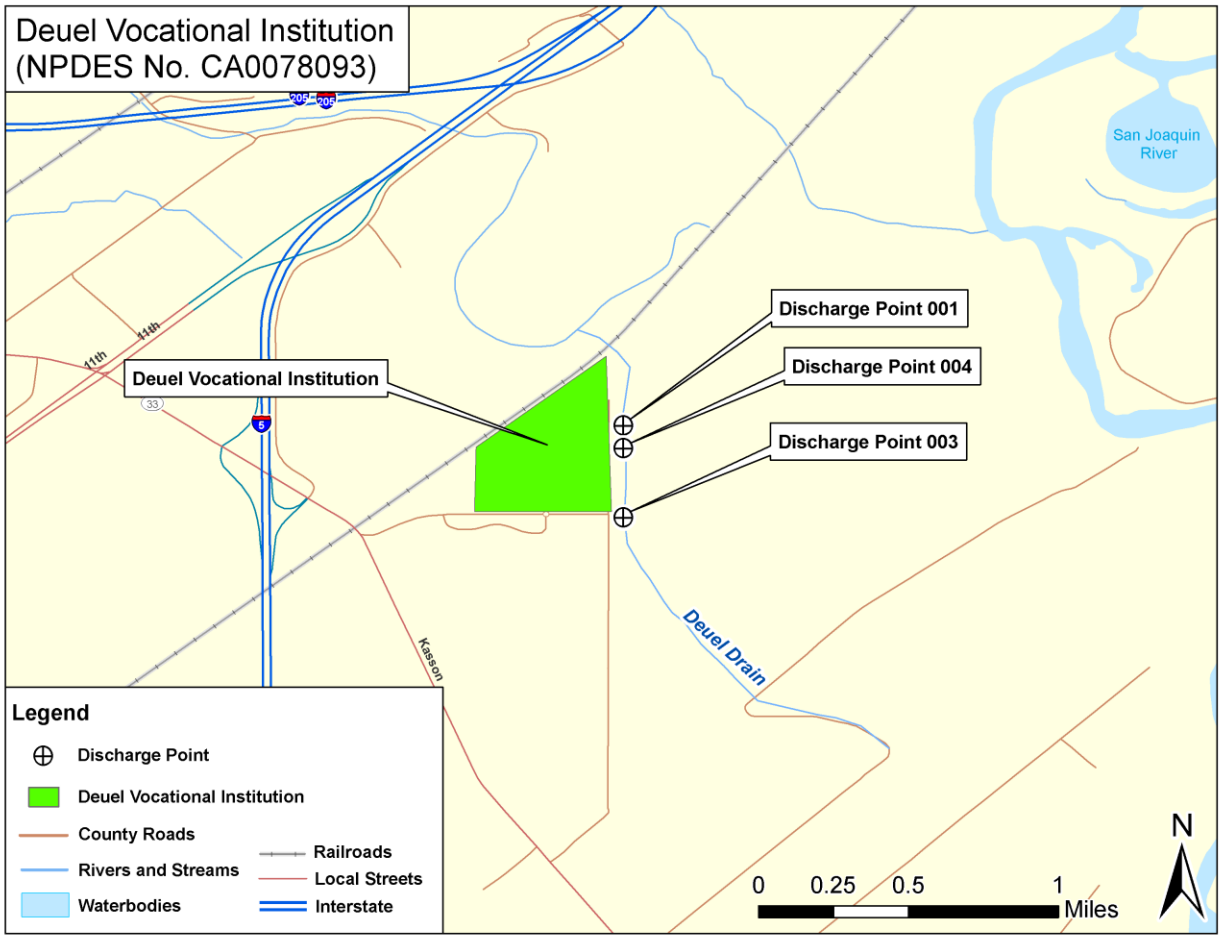

ATTACHMENT C – FLOW SCHEMATIC

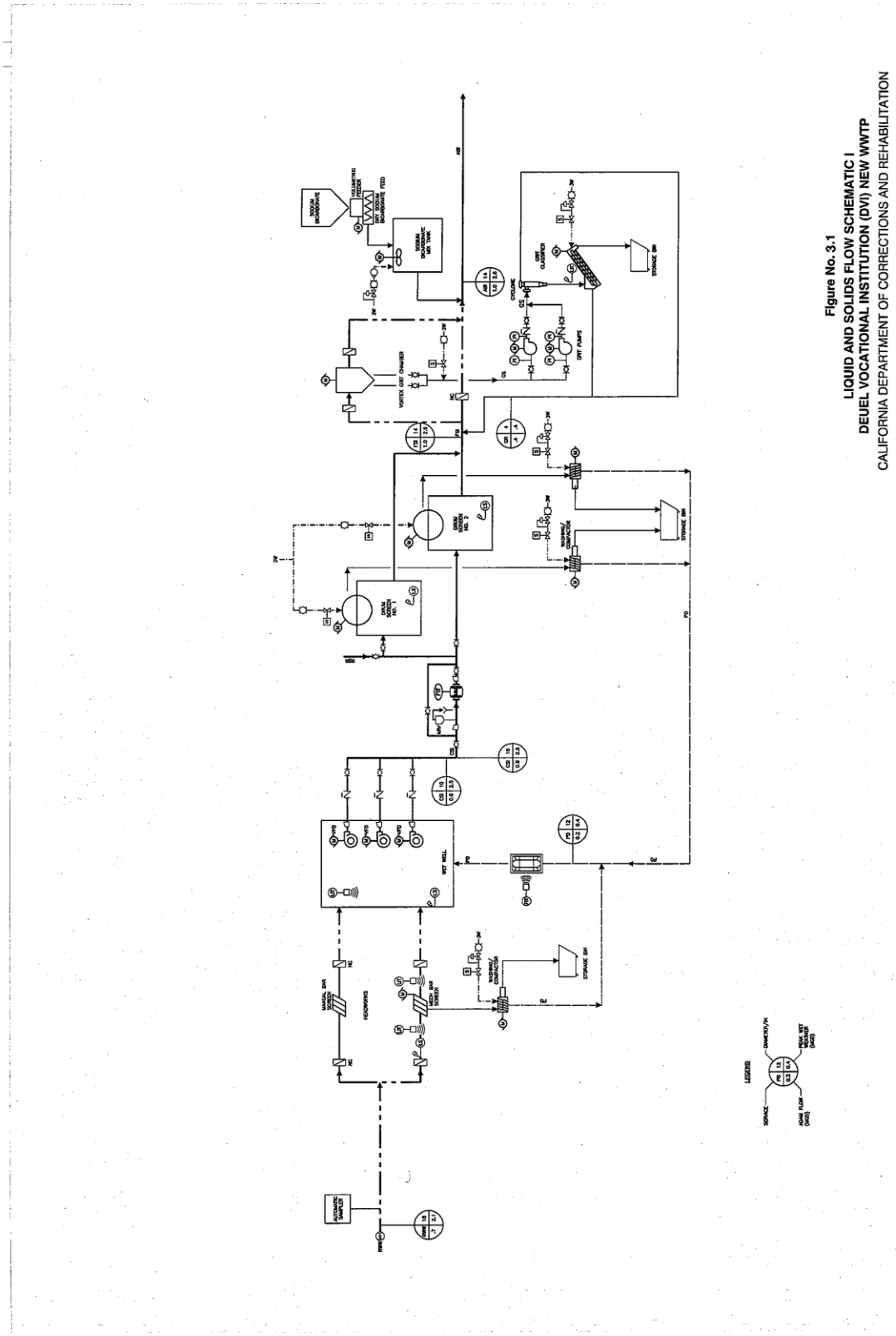

Figure No. 3.1
LIQUID AND SOLIDS FLOW SCHEMATIC I
DEUEL VOCATIONAL INSTITUTION (DVI) NEW WWTP
CALIFORNIA DEPARTMENT OF CORRECTIONS AND REHABILITATION

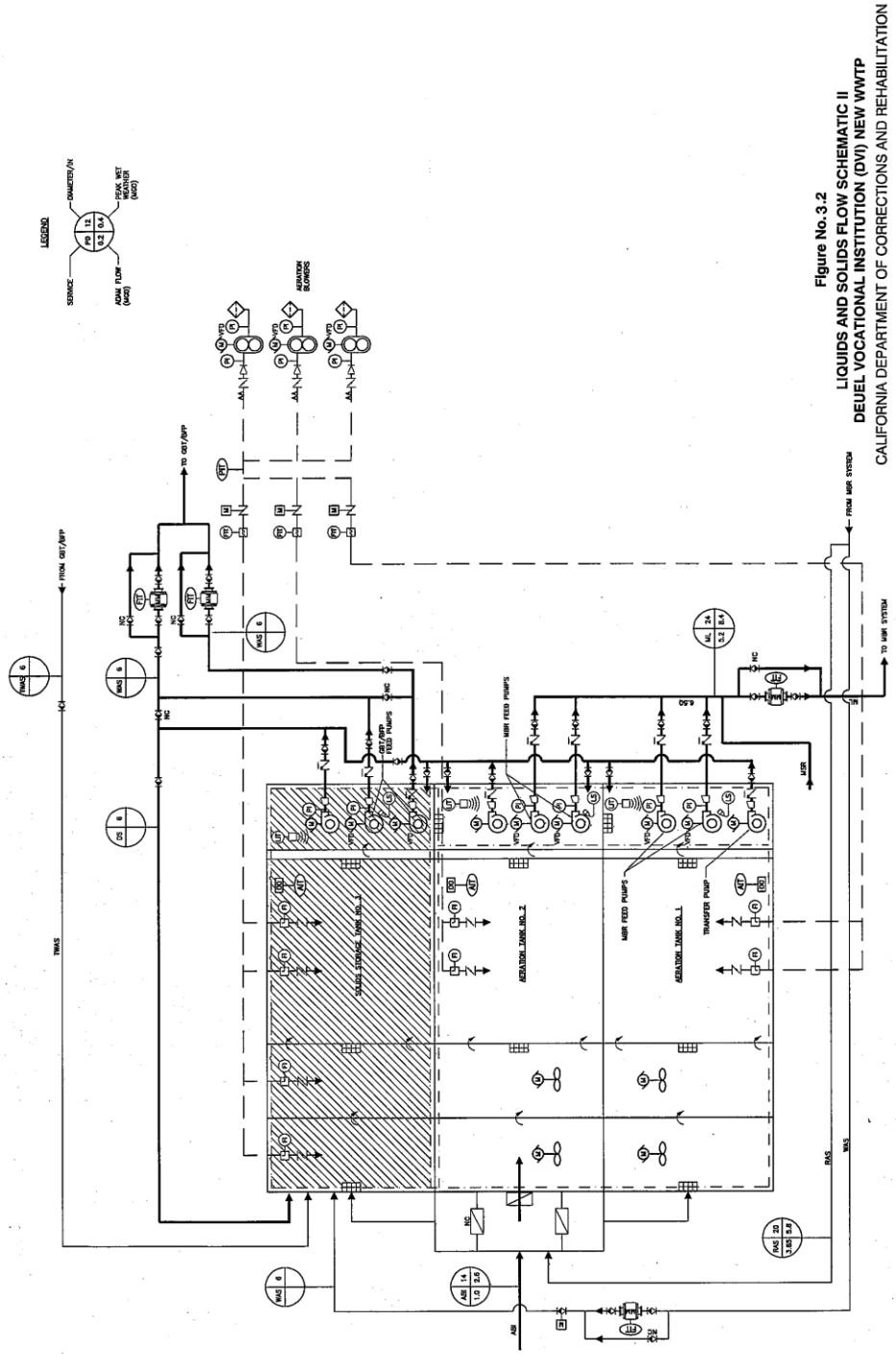

Figure No. 3.2
LIQUIDS AND SOLIDS FLOW SCHEMATIC II
DEUEL VOCATIONAL INSTITUTION (DVI) NEW WWTP
CALIFORNIA DEPARTMENT OF CORRECTIONS AND REHABILITATION

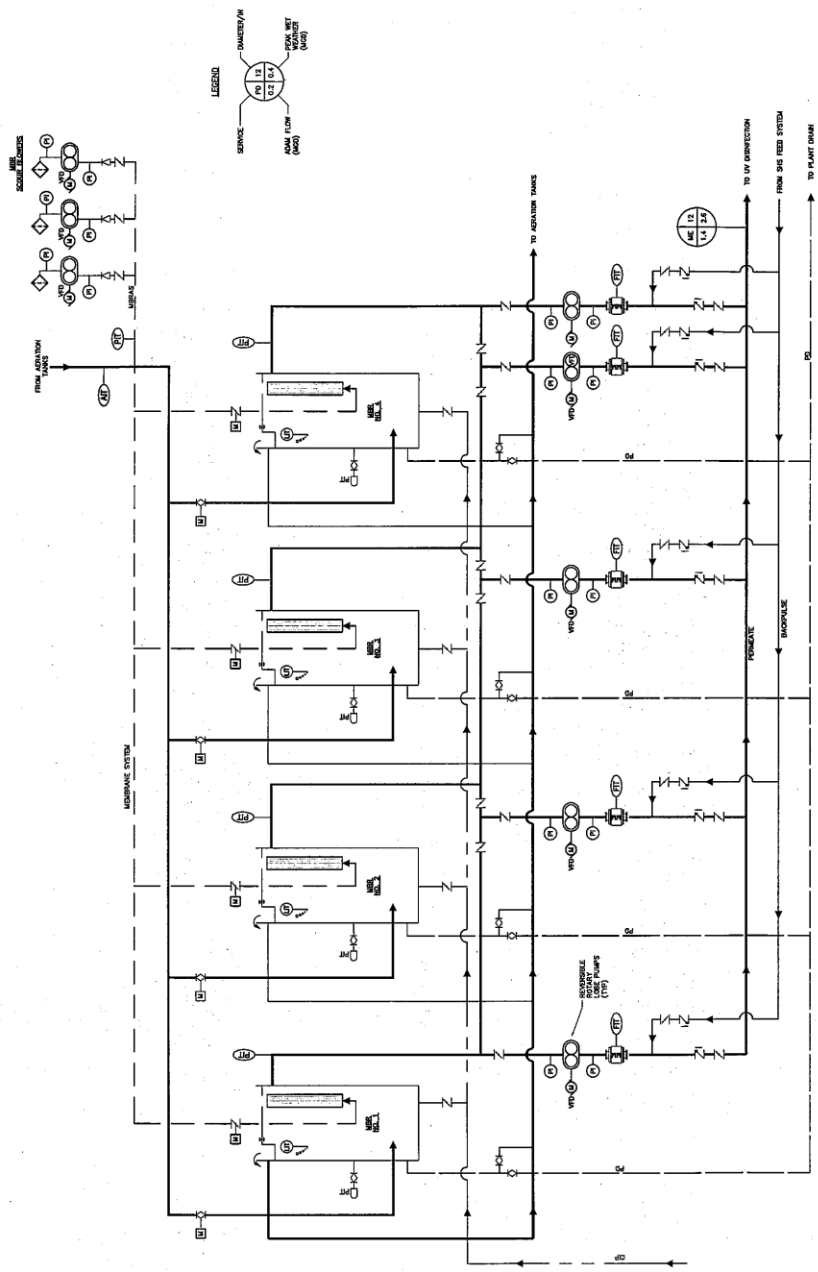

Figure No. 3.3
LIQUIDS AND SOLIDS FLOW SCHEMATIC III
DEUEL VOCATIONAL INSTITUTION (DVI) NEW WWTP
CALIFORNIA DEPARTMENT OF CORRECTIONS AND REHABILITATION

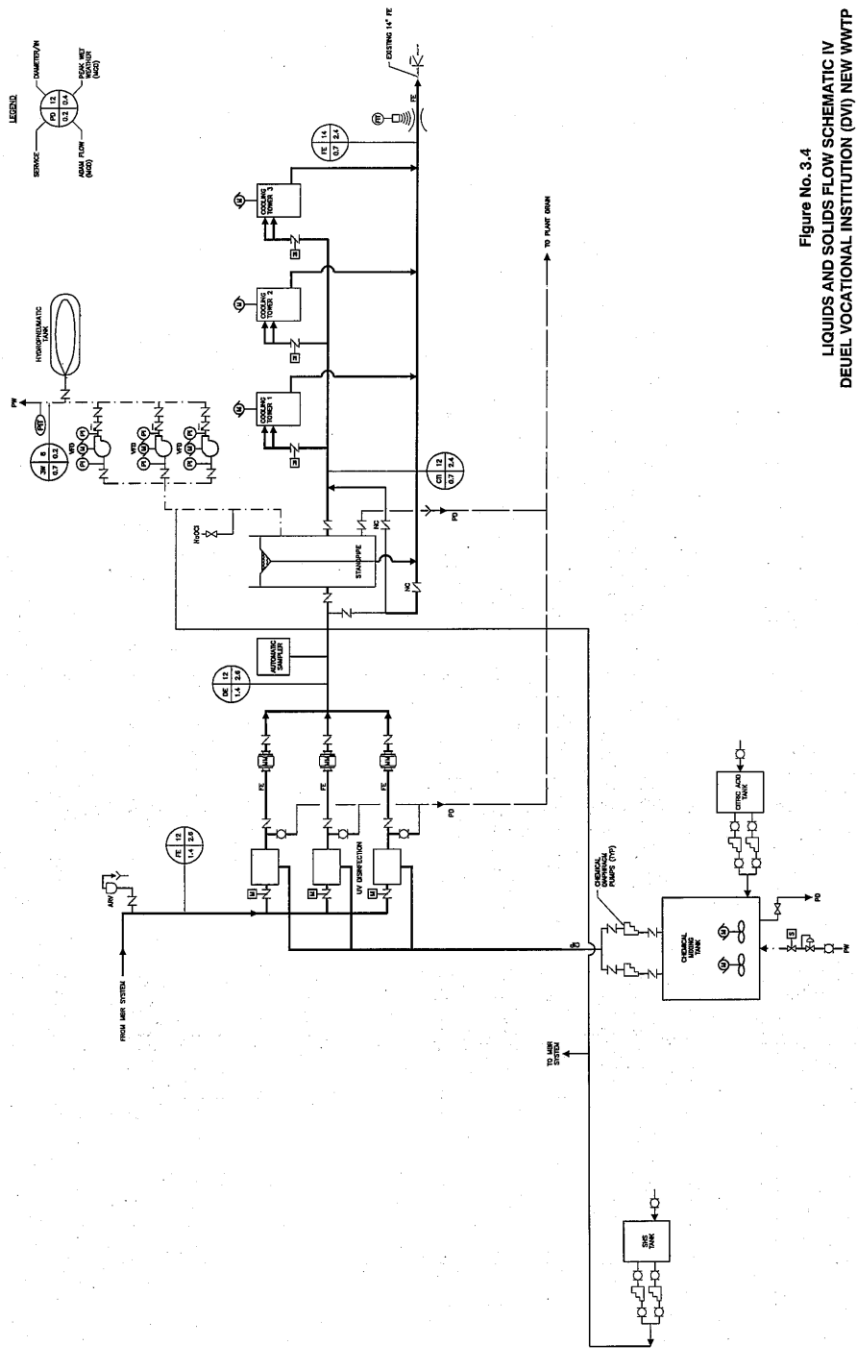

Figure No. 3.4
LIQUIDS AND SOLIDS FLOW SCHEMATIC IV
DEUEL VOCATIONAL INSTITUTION (DVI) NEW WWTP
CALIFORNIA DEPARTMENT OF CORRECTIONS AND REHABILITATION

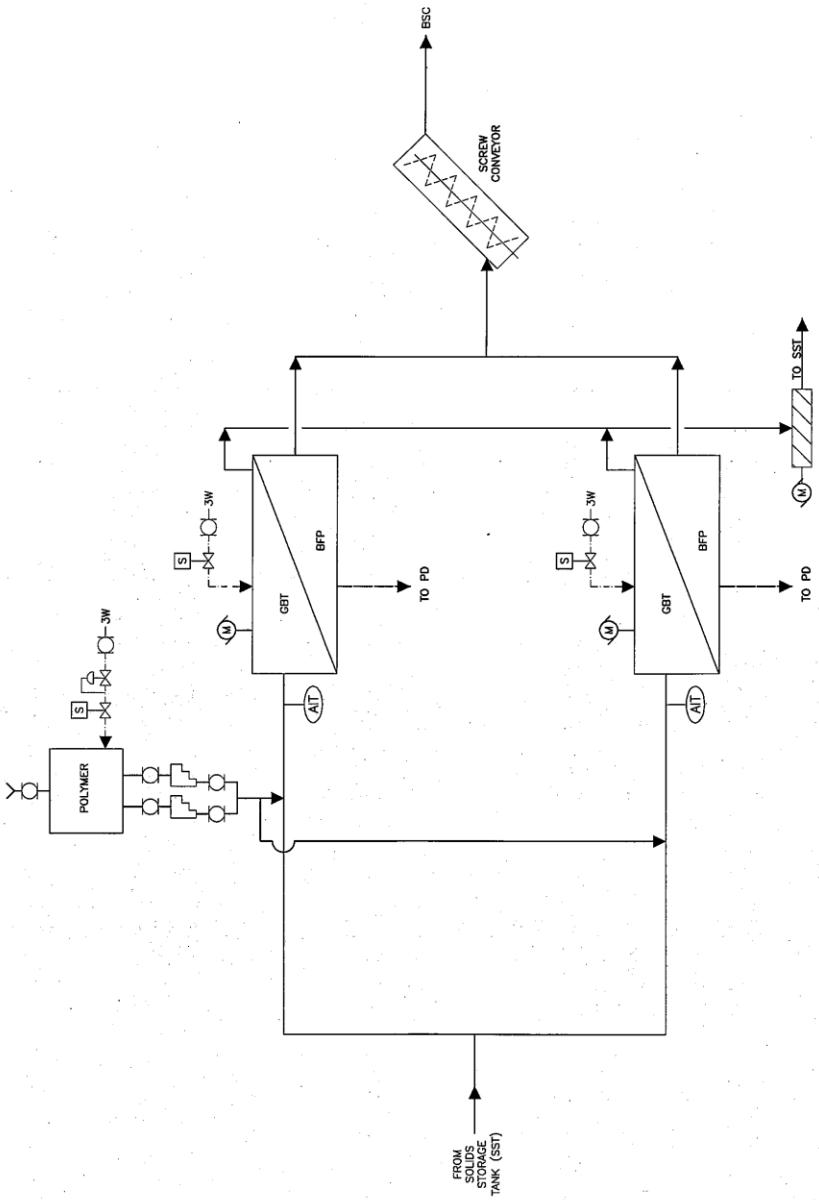

Figure No. 3.5
LIQUIDS AND SOLIDS FLOW SCHEMATIC V
DEUEL VOCATIONAL INSTITUTION (DVI) NEW WWTP
CALIFORNIA DEPARTMENT OF CORRECTIONS AND REHABILITATION

ATTACHMENT D – STANDARD PROVISIONS

I. STANDARD PROVISIONS – PERMIT COMPLIANCE

A. Duty to Comply

1. The Discharger must comply with all of the conditions of this Order. Any noncompliance constitutes a violation of the Clean Water Act (CWA) and the California Water Code and is grounds for enforcement action, for permit termination, revocation and reissuance, or modification; or denial of a permit renewal application. (40 CFR § 122.41(a).)

2. The Discharger shall comply with effluent standards or prohibitions established under Section 307(a) of the CWA for toxic pollutants and with standards for sewage sludge use or disposal established under Section 405(d) of the CWA within the time provided in the regulations that establish these standards or prohibitions, even if this Order has not yet been modified to incorporate the requirement. (40 CFR § 122.41(a)(1).)

B. Need to Halt or Reduce Activity Not a Defense

It shall not be a defense for a Discharger in an enforcement action that it would have been necessary to halt or reduce the permitted activity in order to maintain compliance with the conditions of this Order. (40 CFR § 122.41(c).)

C. Duty to Mitigate

The Discharger shall take all reasonable steps to minimize or prevent any discharge or sludge use or disposal in violation of this Order that has a reasonable likelihood of adversely affecting human health or the environment. (40 CFR § 122.41(d).)

D. Proper Operation and Maintenance

The Discharger shall at all times properly operate and maintain all facilities and systems of treatment and control (and related appurtenances) which are installed or used by the Discharger to achieve compliance with the conditions of this Order. Proper operation and maintenance also includes adequate laboratory controls and appropriate quality assurance procedures. This provision requires the operation of backup or auxiliary facilities or similar systems that are installed by a Discharger only when necessary to achieve compliance with the conditions of this Order. (40 CFR § 122.41(e).)

E. Property Rights

1. This Order does not convey any property rights of any sort or any exclusive privileges. (40 CFR § 122.41(g).)

2. The issuance of this Order does not authorize any injury to persons or property or invasion of other private rights, or any infringement of state or local law or regulations. (40 CFR § 122.5(c).)

F. Inspection and Entry

The Discharger shall allow the Central Valley Water Board, State Water Board, U.S. EPA, and/or their authorized representatives (including an authorized contractor acting as their representative), upon the presentation of credentials and other documents, as may be required by law, to (40 CFR § 122.41(i); Wat. Code, § 13383):

1. Enter upon the Discharger's premises where a regulated facility or activity is located or conducted, or where records are kept under the conditions of this Order (40 CFR § 122.41(i)(1));

2. Have access to and copy, at reasonable times, any records that must be kept under the conditions of this Order (40 CFR § 122.41(i)(2));
3. Inspect and photograph, at reasonable times, any facilities, equipment (including monitoring and control equipment), practices, or operations regulated or required under this Order (40 CFR § 122.41(i)(3)); and
4. Sample or monitor, at reasonable times, for the purposes of assuring Order compliance or as otherwise authorized by the CWA or the Water Code, any substances or parameters at any location. (40 CFR § 122.41(i)(4).)

G. Bypass

1. Definitions
   a. "Bypass" means the intentional diversion of waste streams from any portion of a treatment facility. (40 CFR § 122.41(m)(1)(i).)
   b. "Severe property damage" means substantial physical damage to property, damage to the treatment facilities, which causes them to become inoperable, or substantial and permanent loss of natural resources that can reasonably be expected to occur in the absence of a bypass. Severe property damage does not mean economic loss caused by delays in production. (40 CFR § 122.41(m)(1)(ii).)
2. Bypass not exceeding limitations. The Discharger may allow any bypass to occur which does not cause exceedances of effluent limitations, but only if it is for essential maintenance to assure efficient operation. These bypasses are not subject to the provisions listed in Standard Provisions – Permit Compliance I.G.3, I.G.4, and I.G.5 below. (40 CFR § 122.41(m)(2).)
3. Prohibition of bypass. Bypass is prohibited, and the Central Valley Water Board may take enforcement action against a Discharger for bypass, unless (40 CFR § 122.41(m)(4)(i)):
   a. Bypass was unavoidable to prevent loss of life, personal injury, or severe property damage (40 CFR § 122.41(m)(4)(i)(A));
   b. There were no feasible alternatives to the bypass, such as the use of auxiliary treatment facilities, retention of untreated wastes, or maintenance during normal periods of equipment downtime. This condition is not satisfied if adequate back-up equipment should have been installed in the exercise of reasonable engineering judgment to prevent a bypass that occurred during normal periods of equipment downtime or preventive maintenance (40 CFR § 122.41(m)(4)(i)(B)); and
   c. The Discharger submitted notice to the Central Valley Water Board as required under Standard Provisions – Permit Compliance I.G.5 below. (40 CFR § 122.41(m)(4)(i)(C).)
4. The Central Valley Water Board may approve an anticipated bypass, after considering its adverse effects, if the Central Valley Water Board determines that it will meet the three conditions listed in Standard Provisions – Permit Compliance I.G.3 above. (40 CFR § 122.41(m)(4)(ii).)
5. Notice
   a. Anticipated bypass. If the Discharger knows in advance of the need for a bypass, it shall submit a notice, if possible at least 10 days before the date of the bypass. (40 CFR § 122.41(m)(3)(i).)

b. Unanticipated bypass. The Discharger shall submit notice of an unanticipated bypass as required in Standard Provisions - Reporting V.E below (24-hour notice). (40 CFR § 122.41(m)(3)(ii).)

H. Upset

Upset means an exceptional incident in which there is unintentional and temporary noncompliance with technology based permit effluent limitations because of factors beyond the reasonable control of the Discharger. An upset does not include noncompliance to the extent caused by operational error, improperly designed treatment facilities, inadequate treatment facilities, lack of preventive maintenance, or careless or improper operation. (40 CFR § 122.41(n)(1).)

1. Effect of an upset. An upset constitutes an affirmative defense to an action brought for noncompliance with such technology based permit effluent limitations if the requirements of Standard Provisions – Permit Compliance I.H.2 below are met. No determination made during administrative review of claims that noncompliance was caused by upset, and before an action for noncompliance, is final administrative action subject to judicial review. (40 CFR § 122.41(n)(2).)
2. Conditions necessary for a demonstration of upset. A Discharger who wishes to establish the affirmative defense of upset shall demonstrate, through properly signed, contemporaneous operating logs or other relevant evidence that (40 CFR § 122.41(n)(3)):
   a. An upset occurred and that the Discharger can identify the cause(s) of the upset (40 CFR § 122.41(n)(3)(i));
   b. The permitted facility was, at the time, being properly operated (40 CFR § 122.41(n)(3)(ii));
   c. The Discharger submitted notice of the upset as required in Standard Provisions – Reporting V.E.2.b below (24-hour notice) (40 CFR § 122.41(n)(3)(iii)); and
   d. The Discharger complied with any remedial measures required under Standard Provisions – Permit Compliance I.C above. (40 CFR § 122.41(n)(3)(iv).)
3. Burden of proof. In any enforcement proceeding, the Discharger seeking to establish the occurrence of an upset has the burden of proof. (40 CFR § 122.41(n)(4).)

II. STANDARD PROVISIONS – PERMIT ACTION

A. General

This Order may be modified, revoked and reissued, or terminated for cause. The filing of a request by the Discharger for modification, revocation and reissuance, or termination, or a notification of planned changes or anticipated noncompliance does not stay any Order condition. (40 CFR § 122.41(f).)

B. Duty to Reapply

If the Discharger wishes to continue an activity regulated by this Order after the expiration date of this Order, the Discharger must apply for and obtain a new permit. (40 CFR § 122.41(b).)

C. Transfers

This Order is not transferable to any person except after notice to the Central Valley Water Board. The Central Valley Water Board may require modification or revocation and reissuance of the Order to change the name of the Discharger and incorporate such other

requirements as may be necessary under the CWA and the Water Code. (40 CFR § 122.41(l)(3); § 122.61.)

III. STANDARD PROVISIONS – MONITORING

A. Samples and measurements taken for the purpose of monitoring shall be representative of the monitored activity. (40 CFR § 122.41(j)(1).)

B. Monitoring results must be conducted according to test procedures under 40 CFR part 136 or, in the case of sludge use or disposal, approved under 40 CFR part 136 unless otherwise specified in 40 CFR part 503 unless other test procedures have been specified in this Order. (40 CFR § 122.41(j)(4); § 122.44(i)(1)(iv).)

IV. STANDARD PROVISIONS – RECORDS

A. Except for records of monitoring information required by this Order related to the Discharger's sewage sludge use and disposal activities, which shall be retained for a period of at least five years (or longer as required by 40 CFR part 503), the Discharger shall retain records of all monitoring information, including all calibration and maintenance records and all original strip chart recordings for continuous monitoring instrumentation, copies of all reports required by this Order, and records of all data used to complete the application for this Order, for a period of at least three (3) years from the date of the sample, measurement, report or application. This period may be extended by request of the Central Valley Water Board Executive Officer at any time. (40 CFR § 122.41(j)(2).)

B. Records of monitoring information shall include:

1. The date, exact place, and time of sampling or measurements (40 CFR § 122.41(j)(3)(i));
2. The individual(s) who performed the sampling or measurements (40 CFR § 122.41(j)(3)(ii));
3. The date(s) analyses were performed (40 CFR § 122.41(j)(3)(iii));
4. The individual(s) who performed the analyses (40 CFR § 122.41(j)(3)(iv));
5. The analytical techniques or methods used (40 CFR § 122.41(j)(3)(v)); and
6. The results of such analyses. (40 CFR § 122.41(j)(3)(vi).)

C. Claims of confidentiality for the following information will be denied (40 CFR § 122.7(b)):

1. The name and address of any permit applicant or Discharger (40 CFR § 122.7(b)(1)); and
2. Permit applications and attachments, permits and effluent data. (40 CFR § 122.7(b)(2).)

V. STANDARD PROVISIONS – REPORTING

A. Duty to Provide Information

The Discharger shall furnish to the Central Valley Water Board, State Water Board, or U.S. EPA within a reasonable time, any information which the Central Valley Water Board, State Water Board, or U.S. EPA may request to determine whether cause exists for modifying, revoking and reissuing, or terminating this Order or to determine compliance with this Order. Upon request, the Discharger shall also furnish to the Central Valley Water Board, State Water Board, or U.S. EPA copies of records required to be kept by this Order. (40 CFR § 122.41(h); Wat. Code, § 13267.)

B. Signatory and Certification Requirements

1. All applications, reports, or information submitted to the Central Valley Water Board, State Water Board, and/or U.S. EPA shall be signed and certified in accordance with Standard Provisions – Reporting V.B.2, V.B.3, V.B.4, and V.B.5 below. (40 CFR § 122.41(k).)

2. All permit applications shall be signed by either a principal executive officer or ranking elected official. For purposes of this provision, a principal executive officer of a federal agency includes: (i) the chief executive officer of the agency, or (ii) a senior executive officer having responsibility for the overall operations of a principal geographic unit of the agency (e.g., Regional Administrators of U.S. EPA). (40 CFR § 122.22(a)(3).).

3. All reports required by this Order and other information requested by the Central Valley Water Board, State Water Board, or U.S. EPA shall be signed by a person described in Standard Provisions – Reporting V.B.2 above, or by a duly authorized representative of that person. A person is a duly authorized representative only if:

   a. The authorization is made in writing by a person described in Standard Provisions – Reporting V.B.2 above (40 CFR § 122.22(b)(1));

   b. The authorization specifies either an individual or a position having responsibility for the overall operation of the regulated facility or activity such as the position of plant manager, operator of a well or a well field, superintendent, position of equivalent responsibility, or an individual or position having overall responsibility for environmental matters for the company. (A duly authorized representative may thus be either a named individual or any individual occupying a named position.) (40 CFR § 122.22(b)(2)); and

   c. The written authorization is submitted to the Central Valley Water Board and State Water Board. (40 CFR § 122.22(b)(3).)

4. If an authorization under Standard Provisions – Reporting V.B.3 above is no longer accurate because a different individual or position has responsibility for the overall operation of the facility, a new authorization satisfying the requirements of Standard Provisions – Reporting V.B.3 above must be submitted to the Central Valley Water Board and State Water Board prior to or together with any reports, information, or applications, to be signed by an authorized representative. (40 CFR § 122.22(c).)

5. Any person signing a document under Standard Provisions – Reporting V.B.2 or V.B.3 above shall make the following certification:

   "I certify under penalty of law that this document and all attachments were prepared under my direction or supervision in accordance with a system designed to assure that qualified personnel properly gather and evaluate the information submitted. Based on my inquiry of the person or persons who manage the system or those persons directly responsible for gathering the information, the information submitted is, to the best of my knowledge and belief, true, accurate, and complete. I am aware that there are significant penalties for submitting false information, including the possibility of fine and imprisonment for knowing violations." (40 CFR § 122.22(d).)

C. Monitoring Reports

1. Monitoring results shall be reported at the intervals specified in the Monitoring and Reporting Program (Attachment E) in this Order. (40 CFR § 122.41(l)(4).)

2. Monitoring results must be reported on a Discharge Monitoring Report (DMR) form or forms provided or specified by the Central Valley Water Board or State Water Board for reporting results of monitoring of sludge use or disposal practices. (40 CFR § 122.41(l)(4)(i).)

3. If the Discharger monitors any pollutant more frequently than required by this Order using test procedures approved under 40 CFR part 136, or another method required for an industry-specific waste stream under 40 CFR subchapters N or O, the results of such monitoring shall be included in the calculation and reporting of the data submitted in the DMR or sludge reporting form specified by the Central Valley Water Board. (40 CFR § 122.41(l)(4)(ii).)

4. Calculations for all limitations, which require averaging of measurements, shall utilize an arithmetic mean unless otherwise specified in this Order. (40 CFR § 122.41(l)(4)(iii).)

D. Compliance Schedules

Reports of compliance or noncompliance with, or any progress reports on, interim and final requirements contained in any compliance schedule of this Order, shall be submitted no later than 14 days following each schedule date. (40 CFR § 122.41(l)(5).)

E. Twenty-Four Hour Reporting

1. The Discharger shall report any noncompliance that may endanger health or the environment. Any information shall be provided orally within 24 hours from the time the Discharger becomes aware of the circumstances. A written submission shall also be provided within five (5) days of the time the Discharger becomes aware of the circumstances. The written submission shall contain a description of the noncompliance and its cause; the period of noncompliance, including exact dates and times, and if the noncompliance has not been corrected, the anticipated time it is expected to continue; and steps taken or planned to reduce, eliminate, and prevent reoccurrence of the noncompliance. (40 CFR § 122.41(l)(6)(i).)

2. The following shall be included as information that must be reported within 24 hours under this paragraph (40 CFR § 122.41(l)(6)(ii)):

   a. Any unanticipated bypass that exceeds any effluent limitation in this Order. (40 CFR § 122.41(l)(6)(ii)(A).)

   b. Any upset that exceeds any effluent limitation in this Order. (40 CFR § 122.41(l)(6)(ii)(B).)

3. The Central Valley Water Board may waive the above-required written report under this provision on a case-by-case basis if an oral report has been received within 24 hours. (40 CFR § 122.41(l)(6)(iii).)

F. Planned Changes

The Discharger shall give notice to the Central Valley Water Board as soon as possible of any planned physical alterations or additions to the permitted facility. Notice is required under this provision only when (40 CFR § 122.41(l)(1)):

1. The alteration or addition to a permitted facility may meet one of the criteria for determining whether a facility is a new source in section 122.29(b) (40 CFR § 122.41(l)(1)(i)); or

2. The alteration or addition results in a significant change in the Discharger's sludge use or disposal practices, and such alteration, addition, or change may justify the application of permit conditions that are different from or absent in the existing permit, including

notification of additional use or disposal sites not reported during the permit application process or not reported pursuant to an approved land application plan. (40 CFR§ 122.41(l)(1)(iii).)

G. Anticipated Noncompliance

The Discharger shall give advance notice to the Central Valley Water Board or State Water Board of any planned changes in the permitted facility or activity that may result in noncompliance with this Order's requirements. (40 CFR § 122.41(l)(2).)

H. Other Noncompliance

The Discharger shall report all instances of noncompliance not reported under Standard Provisions – Reporting V.C, V.D, and V.E above at the time monitoring reports are submitted. The reports shall contain the information listed in Standard Provision – Reporting V.E above. (40 CFR § 122.41(l)(7).)

I. Other Information

When the Discharger becomes aware that it failed to submit any relevant facts in a permit application, or submitted incorrect information in a permit application or in any report to the Central Valley Water Board, State Water Board, or U.S. EPA, the Discharger shall promptly submit such facts or information. (40 CFR § 122.41(l)(8).)

VI. STANDARD PROVISIONS – ENFORCEMENT

A. The Central Valley Water Board is authorized to enforce the terms of this permit under several provisions of the Water Code, including, but not limited to, sections 13385, 13386, and 13387.

VII. ADDITIONAL PROVISIONS – NOTIFICATION LEVELS

A. Publicly-Owned Treatment Works (POTWs)

All POTWs shall provide adequate notice to the Central Valley Water Board of the following (40 CFR § 122.42(b)):

1. Any new introduction of pollutants into the POTW from an indirect discharger that would be subject to sections 301 or 306 of the CWA if it were directly discharging those pollutants (40 CFR § 122.42(b)(1)); and
2. Any substantial change in the volume or character of pollutants being introduced into that POTW by a source introducing pollutants into the POTW at the time of adoption of the Order. (40 CFR § 122.42(b)(2).)
3. Adequate notice shall include information on the quality and quantity of effluent introduced into the POTW as well as any anticipated impact of the change on the quantity or quality of effluent to be discharged from the POTW. (40 CFR § 122.42(b)(3).)

ATTACHMENT E – MONITORING AND REPORTING PROGRAM

Contents

I. General Monitoring Provisions E-2
II. Monitoring Locations E-3
III. Influent Monitoring Requirements E-4
A. Monitoring Location INF-001 ..... E-4
IV. Effluent Monitoring Requirements E-4
A. Monitoring Location EFF-001 ..... E-4
V. Whole Effluent Toxicity Testing Requirements E-5
VI. Land Discharge Monitoring Requirements – Not Applicable E-8
VII. Recycling Monitoring Requirements – Not Applicable E-8
VIII. Receiving Water Monitoring Requirements E-8
A. Monitoring Locations RSW-001 and RSW-002 ..... E-9
IX. Other Monitoring Requirements E-10
A. Biosolids E-10
B. Municipal Water Supply E-10
C. Ultraviolet Light (UV) Disinfection System E-11
D. Effluent and Receiving Water Characterization E-11
X. Reporting Requirements E-15
A. General Monitoring and Reporting Requirements E-15
B. Self-Monitoring Reports (SMR's) E-16
C. Discharge Monitoring Reports (DMR's) – Not Applicable E-19
D. Other Reports E-19

Tables

Table E-1. Monitoring Station Locations E-3
Table E-2. Influent Monitoring E-4
Table E-3. Effluent Monitoring E-4
Table E-4. Chronic Toxicity Testing Dilution Series E-7
Table E-5. Receiving Water Monitoring Requirements – Monitoring Locations RSW-001 and RSW-002 ..... E-9
Table E-6. Municipal Water Supply Monitoring Requirements – Monitoring Location SPL-001 ..... E-10
Table E-7. Ultraviolet Light Disinfection System Monitoring Requirements – Monitoring Locations UVS-001 and UVS-002 ..... E-11
Table E-8. Effluent and Receiving Water Characterization Monitoring E-12
Table E-9. Monitoring Periods and Reporting Schedule E-16
Table E-10. Reporting Requirements for Special Provisions Reports E-19

ATTACHMENT E – MONITORING AND REPORTING PROGRAM (MRP)

The Code of Federal Regulations (40 CFR § 122.48) requires that all NPDES permits specify monitoring and reporting requirements. Water Code sections 13267 and 13383 also authorize the Central Valley Water Board to require technical and monitoring reports. This MRP establishes monitoring and reporting requirements that implement federal and California regulations.

I. GENERAL MONITORING PROVISIONS

A. Samples and measurements taken as required herein shall be representative of the volume and nature of the monitored discharge. All samples shall be taken at the monitoring locations specified below and, unless otherwise specified, before the monitored flow joins or is diluted by any other waste stream, body of water, or substance. Monitoring locations shall not be changed without notification to and the approval of the Central Valley Water Board.

B. Effluent samples shall be taken downstream of the last addition of wastes to the treatment or discharge works where a representative sample may be obtained prior to mixing with the receiving waters. Samples shall be collected at such a point and in such a manner to ensure a representative sample of the discharge.

C. Chemical, bacteriological, and bioassay analyses of any material required by this Order shall be conducted by a laboratory certified for such analyses by the Department of Public Health (DPH). Laboratories that perform sample analyses must be identified in all monitoring reports submitted to the Central Valley Water Board. In the event a certified laboratory is not available to the Discharger for any onsite field measurements such as pH, dissolved oxygen (DO), turbidity, temperature, and residual chlorine, such analyses performed by a noncertified laboratory will be accepted provided a Quality Assurance-Quality Control Program is instituted by the laboratory. A manual containing the steps followed in this program for any onsite field measurements such as pH, DO, turbidity, temperature, and residual chlorine must be kept onsite in the treatment facility laboratory and shall be available for inspection by Central Valley Water Board staff. The Discharger must demonstrate sufficient capability (qualified and trained employees, properly calibrated and maintained field instruments, etc.) to adequately perform these field measurements. The Quality Assurance-Quality Control Program must conform to USEPA guidelines or to procedures approved by the Central Valley Water Board.

D. Appropriate flow measurement devices and methods consistent with accepted scientific practices shall be selected and used to ensure the accuracy and reliability of measurements of the volume of monitored discharges. All monitoring instruments and devices used by the Discharger to fulfill the prescribed monitoring program shall be properly maintained and calibrated as necessary, at least yearly, to ensure their continued accuracy. All flow measurement devices shall be calibrated at least once per year to ensure continued accuracy of the devices.

E. Monitoring results, including noncompliance, shall be reported at intervals and in a manner specified in this Monitoring and Reporting Program.

F. Laboratories analyzing monitoring samples shall be certified by DPH, in accordance with the provision of Water Code section 13176, and must include quality assurance/quality control data with their reports.

G. The Discharger shall conduct analysis on any sample provided by USEPA as part of the Discharge Monitoring Quality Assurance (DMQA) program. The results of any such analysis shall be submitted to USEPA's DMQA manager.

H. The Discharger shall file with the Central Valley Water Board technical reports on self-monitoring performed according to the detailed specifications contained in this Monitoring and Reporting Program.

I. The results of all monitoring required by this Order shall be reported to the Central Valley Water Board, and shall be submitted in such a format as to allow direct comparison with the limitations and requirements of this Order. Unless otherwise specified, discharge flows shall be reported in terms of the monthly average and the daily maximum discharge flows.

II. MONITORING LOCATIONS

The Discharger shall establish the following monitoring locations to demonstrate compliance with the effluent limitations, discharge specifications, and other requirements in this Order:

Table E-1. Monitoring Station Locations

Discharge Point Name	Monitoring Location Name	Monitoring Location Description
--	INF-001	A location where a representative sample of the influent into the Facility can be collected prior to any plant return flows or treatment processes.
001	EFF-001	A location where a representative sample of the effluent from the Facility can be collected downstream from the last connection through which wastes can be admitted to the outfall. Latitude: 37° 45’ 02” N Longitude: 121° 19’ 35” W
--	RSW-001	In Deuel Drain, 3080 feet upstream from the point of discharge of Discharge Point 001.
--	RSW-002	In Deuel Drain, 450 feet downstream from the point of discharge of Discharge Point 001.
--	RSW-003	In Paradise Cut, 900 feet east of the confluence with Deuel Drain.
--	BIO-001	A location where a representative sample of biosolids can be obtained.
--	SPL-001	A location where a representative sample of the municipal water can be obtained.
--	UVS-001	A location where a representative sample of wastewater can be collected immediately before entering the ultraviolet light (UV) disinfection system.
	UVS-002	A location where a representative sample of wastewater can be collected immediately downstream of the UV disinfection system.

The North latitude and West longitude information in Table E-1 are approximate for administrative purposes.

III. INFLUENT MONITORING REQUIREMENTS

A. Monitoring Location INF-001

1. The Discharger shall monitor influent to the Facility at Monitoring Location INF-001 as follows:

Table E-2. Influent Monitoring

Parameter	Units	Sample Type	Minimum Sampling Frequency	Required Analytical Test Method
Flow	MGD	Meter	Continuous	--
Conventional Pollutants				
Biochemical Oxygen Demand (5-day @ 20°C)	mg/L	24-hr Composite[1]	1/Week	[2]
Total Suspended Solids	mg/L	24-hr Composite[1]	1/Week	[2]
Non-Conventional Pollutants				
Electrical Conductivity @ 25ºC	µmhos/cm	Grab[3]	1/Month	[2]
Total Dissolved Solids	mg/L	Grab[3]	1/Month	[2]

[1] 24-hour flow proportional composite.
[2] Pollutants shall be analyzed using the analytical methods described in 40 CFR Part 136; or by methods approved by the Central Valley Water Board or the State Water Board.
[3] Grab samples shall not be collected at the same time each day to get a complete representation of variations in the influent.

IV. EFFLUENT MONITORING REQUIREMENTS

A. Monitoring Location EFF-001

1. The Discharger shall monitor treated wastewater at Monitoring Location EFF-001 as follows. If more than one analytical test method is listed for a given parameter, the Discharger must select from the listed methods and corresponding Minimum Level:

Table E-3. Effluent Monitoring

Parameter	Units	Sample Type	Minimum Sampling Frequency	Required Analytical Test Method
Flow	MGD	Meter	Continuous	--
Conventional Pollutants				
Biochemical Oxygen Demand (5-day @ 20˚C)	mg/L	24-hr Composite[1]	1/Week	[2]
	lbs/day	Calculate	1/Week	--
pH	standard units	Grab	1/Week[3,4]	[2]
Total Suspended Solids	mg/L	24-hr Composite[1]	1/Week	[2]
	lbs/day	Calculate	1/Week	--
Priority Pollutants				
Copper, Total Recoverable	µg/L	Grab	1/Month	[2,5]
Cyanide, Total (as CN)	µg/L	Grab	1/Month	[2,5]
Mercury, Total Recoverable	ng/L	Grab	1/Month	[2,5,6]
Non-Conventional Pollutants				
Ammonia Nitrogen, Total	mg/L	Grab	1/Week[3,7]	[2]

Parameter	Units	Sample Type	Minimum Sampling Frequency	Required Analytical Test Method
(as N)	lbs/day	Calculate	1/Week	[2]
Chloride	mg/L	Grab	2/Year[8]	[2]
Chlorine, Total Residual	mg/L	Meter	1/Day[9]	[2]
Chlorpyrifos	µg/L	Grab	1/Year	[2]
Diazinon	µg/L	Grab	1/Year	[2]
Electrical Conductivity @ 25°C	µmhos/cm	Grab	1/Month	[2]
Hardness, Total (as $CaCO_3$)	mg/L	Grab	1/Month[10]	[2]
Mercury (methyl)	ng/L	Grab	1/Month	[2, 6]
Nitrite Nitrogen, Total (as N)	mg/L	Grab	1/Month	[2]
Nitrate plus Nitrite (as N)	mg/L	Grab	1/Month	[2]
Temperature	°F	Grab	1/Week[3,4]	[2]
Total Dissolved Solids	mg/L	Grab	2/Year[8]	[2]

[1] 24-hour flow proportional composite.
[2] Pollutants shall be analyzed using the analytical methods described in 40 CFR Part 136 or by methods approved by the Central Valley Water Board or the State Water Board.
[3] pH and temperature shall be recorded at the time of ammonia sample collection.
[4] A hand-held field meter may be used, provided the meter utilizes a USEPA-approved algorithm/method and is calibrated and maintained in accordance with the manufacturer's instructions. A calibration and maintenance log for each meter used for monitoring required by this Monitoring and Reporting Program shall be maintained at the Facility.
[5] For priority pollutant constituents the reporting level shall be consistent with Sections 2.4.2 and 2.4.3 of the *Policy for Implementation of Toxics Standards for Inland Surface Waters, Enclosed Bays, and Estuaries of California* (See Table E-8).
[6] Unfiltered methyl mercury and total mercury samples shall be taken using clean hands/dirty hands procedures, as described in U.S. EPA method 1669: Sampling Ambient Water for Trace Metals at EPA Water Quality Criteria Levels, for collection of equipment blanks (section 9.4.4.2), and shall be analyzed by U.S. EPA method 1630/1631 (Revision E) with a reporting level of 0.05 ng/L for methyl mercury and 0.5 ng/L for total mercury.
[7] Concurrent with whole effluent toxicity monitoring.
[8] Monitoring shall be conducted twice per year, once during the dry season (April through October) and once during the wet season (November through March).
[9] Monitoring for total residual chlorine only required when cleaning the membrane bioreactor filters. Total chlorine residual must be monitored with a method sensitive to and accurate at the permitted level of 0.01 mg/L.
[10] Hardness samples shall be collected concurrently with metals samples.

V. WHOLE EFFLUENT TOXICITY TESTING REQUIREMENTS

A. Acute Toxicity Testing. The Discharger shall conduct acute toxicity testing to determine whether the effluent is contributing acute toxicity to the receiving water. The Discharger shall meet the following acute toxicity testing requirements:

1. *Monitoring Frequency* – The Discharger shall perform quarterly acute toxicity testing, concurrent with effluent ammonia sampling.

2. *Sample Types* – The Discharger may use flow-through or static renewal testing. For static renewal testing, the samples shall be grab samples and shall be representative of

the volume and quality of the discharge. The effluent samples shall be taken at Monitoring Location EFF-001.

3. *Test Species* – Test species shall be fathead minnows (*Pimephales promelas*).

4. *Methods* – The acute toxicity testing samples shall be analyzed using EPA-821-R-02-012, Fifth Edition. Temperature, total residual chlorine, and pH shall be recorded at the time of sample collection. No pH adjustment may be made unless approved by the Executive Officer.

5. *Test Failure* – If an acute toxicity test does not meet all test acceptability criteria, as specified in the test method, the Discharger must re-sample and re-test as soon as possible, not to exceed 7 days following notification of test failure.

B. Chronic Toxicity Testing. The Discharger shall conduct three species chronic toxicity testing to determine whether the effluent is contributing chronic toxicity to the receiving water. The Discharger shall meet the following chronic toxicity testing requirements:

1. *Monitoring Frequency* – The Discharger shall perform quarterly three species chronic toxicity testing.

2. *Sample Types* – Effluent samples shall be flow proportional 24-hour composites and shall be representative of the volume and quality of the discharge. The effluent samples shall be taken at Monitoring Location EFF-001.

3. *Sample Volumes* – Adequate sample volumes shall be collected to provide renewal water to complete the test in the event that the discharge is intermittent.

4. *Test Species* – Chronic toxicity testing measures sublethal (e.g., reduced growth, reproduction) and/or lethal effects to test organisms exposed to an effluent compared to that of the control organisms. The Discharger shall conduct chronic toxicity tests with:

   - The cladoceran, water flea, *Ceriodaphnia dubia* (survival and reproduction test);
   - The fathead minnow, *Pimephales promelas* (larval survival and growth test); and
   - The green alga, *Selenastrum capricornutum* (growth test).

5. Methods – The presence of chronic toxicity shall be estimated as specified in *Short-term Methods for Estimating the Chronic Toxicity of Effluents and Receiving Waters to Freshwater Organisms*, Fourth Edition, EPA/821-R-02-013, October 2002.

6. *Reference Toxicant* – As required by the SIP, all chronic toxicity tests shall be conducted with concurrent testing with a reference toxicant and shall be reported with the chronic toxicity test results.

7. *Dilutions* – For routine and accelerated chronic toxicity monitoring, it is not necessary to perform the test using a dilution series. The chronic toxicity testing may be performed using 100% effluent and one control. For the TRE monitoring, the chronic toxicity testing shall be performed using the dilution series identified in Table E-4, below, unless an alternative dilution series is detailed in the submitted TRE Action Plan. A receiving water control or laboratory water control may be used as the diluent.

Table E-4. Chronic Toxicity Testing Dilution Series

Sample	Dilutions[a] (%)					Control
	100	75	50	25	12.5	
% Effluent	100	75	50	25	12.5	0
% Control Water	0	25	50	75	87.5	100

[a] Receiving water control or laboratory water control may be used as the diluent.

8. *Test Failure* – The Discharger must re-sample and re-test as soon as possible, but no later than fourteen (14) days after receiving notification of a test failure. A test failure is defined as follows:

   a. The reference toxicant test or the effluent test does not meet all test acceptability criteria as specified in the Short-term Methods for Estimating the Chronic Toxicity of Effluents and Receiving Waters to Freshwater Organisms, Fourth Edition, EPA/821-R-02-013, October 2002 (Method Manual), and its subsequent amendments or revisions; or

   b. The percent minimum significant difference (PMSD) measured for the test exceeds the upper PMSD bound variability criterion in Table 6 on page 52 of the Method Manual. (A retest is only required in this case if the test results do not exceed the monitoring trigger specified in the Special Provision at section VI.C.2.a.iii. of the Order.)

C. WET Testing Notification Requirements. The Discharger shall notify the Central Valley Water Board within 24-hours after the receipt of test results exceeding the monitoring trigger during regular or accelerated monitoring, or an exceedance of the acute toxicity effluent limitation.

D. WET Testing Reporting Requirements. All toxicity test reports shall include the contracting laboratory's complete report provided to the Discharger and shall be in accordance with the appropriate "Report Preparation and Test Review" sections of the method manuals. At a minimum, whole effluent toxicity monitoring shall be reported as follows:

1. **Chronic WET Reporting**. Regular chronic toxicity monitoring results shall be reported to the Central Valley Water Board within 30 days following completion of the test, and shall contain, at minimum:

   a. The results expressed in TUc, measured as 100/NOEC, and also measured as 100/LC50, 100/EC25, 100/IC25, and 100/IC50, as appropriate.

   b. The statistical methods used to calculate endpoints;

   c. The statistical output page, which includes the calculation of the percent minimum significant difference (PMSD);

   d. The dates of sample collection and initiation of each toxicity test; and

   e. The results compared to the numeric toxicity monitoring trigger.

   Additionally, the monthly discharger self-monitoring reports shall contain an updated chronology of chronic toxicity test results expressed in TUc, and organized by test species, type of test (survival, growth or reproduction), and monitoring frequency, i.e., either quarterly, monthly, accelerated, or Toxicity Reduction Evaluation (TRE).

2. **Acute WET Reporting.** Acute toxicity test results shall be submitted with the monthly discharger self-monitoring reports and reported as percent survival.

3. **TRE Reporting.** Reports for TREs shall be submitted in accordance with the schedule contained in the Discharger's approved TRE Workplan, or as amended by the Discharger's TRE Action Plan.

4. **Quality Assurance (QA).** The Discharger must provide the following information for QA purposes:

   a. Results of the applicable reference toxicant data with the statistical output page giving the species, NOEC, LOEC, type of toxicant, dilution water used, concentrations used, PMSD, and dates tested.

   b. The reference toxicant control charts for each endpoint, which include summaries of reference toxicant tests performed by the contracting laboratory.

   c. Any information on deviations or problems encountered and how they were dealt with.

VI. LAND DISCHARGE MONITORING REQUIREMENTS – NOT APPLICABLE

VII. RECYCLING MONITORING REQUIREMENTS – NOT APPLICABLE

VIII. RECEIVING WATER MONITORING REQUIREMENTS

The Discharger shall implement the Receiving Water Monitoring Requirements in Attachment E, Sections VIII.A.1 and VIII.A.2 of this Order. However, in lieu of conducting the individual monitoring specified in Attachment E, Sections VIII.A.1 and VIII.A.2 of this Order (including visual observations), the Discharger may elect to participate in the Delta Regional Monitoring Program. [1] The Discharger may choose to conduct all or part of the receiving water monitoring through the Delta Regional Monitoring Program. If the Discharger elects to cease all or part of the individual receiving water monitoring and instead participates in the Delta Regional Monitoring Program, the Discharger shall submit a letter signed by an authorized representative informing the Board that the Discharger will participate in the Delta Regional Monitoring Program, and the date on which individual receiving water monitoring required under Attachment E, Sections VIII.A.1 and VIII.A.2 will cease, or be modified, and specific monitoring locations and constituent combinations that will no longer be conducted individually. Written approval of the Discharger's request, by the Executive Officer, is required prior to discontinuing part or all of individual receiving water monitoring. Approval by the Executive Officer is not required prior to participating in the Delta Regional Monitoring Program.

If the Discharger participates in the Delta Regional Monitoring Program in lieu of conducting individual receiving water monitoring, the Discharger shall continue to participate in the Delta Regional Monitoring Program until such time as the Discharger informs the Board that participation in the Delta RMP will cease and individual monitoring is reinstituted. Receiving water monitoring under Attachment E, Sections VIII.A.1 and VIII.A.2, is not required under this Order so long as the Discharger adequately supports the Delta Regional Monitoring Program. If the Discharger fails to adequately support the Delta Regional Monitoring Program, as defined by the Delta RMP Steering Committee, the Discharger shall reinstitute individual receiving water monitoring under Attachment E, Sections VIII.A.1 and VIII.A.2, upon written notice from the Executive Officer. During participation in the Delta RMP, the Discharger may- conduct and submit any or part of the

[1] If the Discharger elects to participate in the Delta RMP, it shall continue to submit receiving water data for temperature. At minimum, one representative upstream receiving water temperature sample shall be submitted annually for the month of January. The temperature data shall be submitted in the January self-monitoring report and will be used to determine compliance with the temperature effluent limitation. Temperature data may be collected by the Discharger for this purpose or the Discharger may submit representative temperature data from the Delta RMP or other appropriate monitoring programs (e.g., Department of Water Resources, United States Geological Survey, etc.).

receiving water monitoring included in this Monitoring and Reporting Program that is deemed appropriate by the Discharger.

Delta RMP data is not intended to be used directly to represent either upstream or downstream water quality for purposes of determining compliance with this Permit. Delta RMP monitoring stations are established generally as “integrator sites” to evaluate the combined impacts on water quality of multiple discharges into the Delta; Delta RMP monitoring stations would not normally be able to identify the source of any specific constituent, but would be used to identify water quality issues needing further evaluation. Delta RMP monitoring data, along with individual Discharger data, may be used to help establish background receiving water quality for Reasonable Potential analyses in an NPDES Permit after evaluation of the applicability of the data for that purpose. Delta RMP data, as with all environmental monitoring data, can provide an assessment of water quality at a specific place and time that can be used in conjunction with other information, such as other receiving water monitoring data, spatial and temporal distribution and trends of receiving water data, effluent data from the Discharger’s discharge and other point and non-point source discharges, receiving water flow volume, speed and direction, and other information to determine the likely source or sources of a constituent that resulted in exceedance of a receiving water quality objective.

During the period of participation in the Delta Regional Monitoring Program, the Discharger shall continue to report any individually conducted receiving water monitoring data in the Electronic Self-Monitoring Reports (eSMR) according to the Monitoring and Reporting Program. In addition- 1) with each submitted eSMR, the Discharger’s eSMR cover letter shall state that the Discharger is participating in the Delta Regional Monitoring Program in lieu of conducting the individual receiving water monitoring program required by the permit, and 2) with each annual report, the Discharger shall attach a copy of the letter originally submitted to the Central Valley Water Board describing the monitoring location(s) and constituent combinations that will no longer be conducted individually.

A. Monitoring Locations RSW-001 and RSW-002

1. The Discharger shall monitor Deuel Drain at Monitoring Locations RSW-001 and RSW-002 as follows:

Table E-5. Receiving Water Monitoring Requirements – Monitoring Locations RSW-001 and RSW-002

Parameter	Units	Sample Type	Minimum Sampling Frequency	Required Analytical Test Method
Conventional Pollutants				
pH	standard units	Grab	1/Month	[1]
Non-Conventional Pollutants				
Dissolved Oxygen	mg/L	Grab	1/Month	[1]
Electrical Conductivity @ 25ºC	µmhos/cm	Grab	1/Month	[1]
Temperature	ºF	Grab	1/Month	[1]
Total Dissolved Solids	mg/L	Grab	1/Month	[1]
Turbidity	NTU	Grab	1/Month	[1]

[1] Pollutants shall be analyzed using the analytical methods described in 40 CFR Part 136 or by methods approved by the Central Valley Water Board or the State Water Board.

2. In conducting the receiving water sampling, a log shall be kept of the receiving water conditions throughout the reach bounded by Monitoring Locations RSW-001 and RSW-002. Attention shall be given to the presence or absence of:

   a. Floating or suspended matter;
   b. Discoloration;
   c. Bottom deposits;
   d. Aquatic life;
   e. Visible films, sheens, or coatings;
   f. Fungi, slimes, or objectionable growths; and
   g. Potential nuisance conditions (e.g. foam).

   Notes on receiving water conditions shall be summarized in the monitoring report.

IX. OTHER MONITORING REQUIREMENTS

A. Biosolids

1. Monitoring Location BIO-001

a. A composite sample of sludge shall be collected annually at Monitoring Location BIO-001 in accordance with EPA's *POTW Sludge Sampling and Analysis Guidance Document*, August 1989, and tested for Title 22 metals.

b. Biosolids monitoring shall be conducted using the methods in Test Methods for Evaluating Solid Waste, Physical/Chemical Methods (EPA publication SW-846), as required in 40 CFR 503.8(b)(4). All results must be reported on a 100% dry weight basis. Records of all analyses must state on each page of the laboratory report whether the results are expressed as “100% dry weight” or “as is.”

c. Sampling records shall be retained for a minimum of **5 years**. A log shall be maintained of sludge quantities generated and of handling and disposal activities. The frequency of entries is discretionary; however, the log must be complete enough to serve as a basis for part of the annual report.

B. Municipal Water Supply

1. Monitoring Location SPL-001

The Discharger shall monitor the municipal water supply at Monitoring Location SPL-001 as follows.

Table E-6. Municipal Water Supply Monitoring Requirements – Monitoring Location SPL-001

Parameter	Units	Sample Type	Minimum Sampling Frequency	Required Analytical Test Method
Non-Conventional Pollutants				
Electrical Conductivity @ 25°C[1]	µmhos/cm	Grab	1/Month	[2]
Total Dissolved Solids[1]	mg/L	Grab	1/Month	[2]

[1] If the water supply is from more than one source, the total dissolved solids and electrical conductivity shall be reported as a weighted average and include copies of supporting calculations.

[2] Pollutants shall be analyzed using the analytical methods described in 40 CFR Part 136 or by methods approved by the Central Valley Water Board or State Water Board.

C. Ultraviolet Light (UV) Disinfection System

1. Monitoring Locations UVS-001 and UVS-002

The Discharger shall monitor the UV disinfection system at Monitoring Locations UVS-001 and UVS-002 as follows:

Table E-7. Ultraviolet Light Disinfection System Monitoring Requirements – Monitoring Locations UVS-001 and UVS-002

Parameter	Units	Sample Type	Monitoring Location	Minimum Sampling Frequency
Flow	MGD	Meter	UVS-002	Continuous[1]
Turbidity	NTU	Meter	UVS-001	Continuous[1,2]
Number of UV banks in operation	Number	Observation	N/A	Continuous[1]
UV Transmittance	Percent (%)	Meter	UVS-001	Continuous[1]
UV Dose[3]	mJ/cm^2	Calculated	N/A	Continuous[1]
Total Coliform Organisms	MPN/100 mL	Grab	UVS-002	1/Week

[1] For continuous analyzers, the Discharger shall report documented routine meter maintenance activities including date, time of day, and duration, in which the analyzer(s) is not in operation. If analyzer(s) fail to provide continuous monitoring for more than two hours and influent and/or effluent from the disinfection process is not diverted for retreatment, the Discharger shall obtain and report hourly manual and/or grab sample results. The Discharger shall not decrease power settings or reduce the number of UV lamp banks in operation while the continuous analyzers are out of service and water is being disinfected.

[2] Report daily average and maximum turbidity.

[3] Report daily minimum hourly average UV dose and daily average UV dose. The minimum hourly average dose shall consist of lowest hourly average dose provided in any channel that had at least one bank of lamps operating during the hour interval. For channels that did not operate for the entire hour interval, the dose will be averaged based on the actual operation time.

D. Effluent and Receiving Water Characterization

If the Discharger is participating in the Delta Regional Monitoring Program as described in Attachment E, Section VIII above, the Receiving Water portion of this Characterization Monitoring is not required. However, the Report of Waste Discharge for the next permit renewal shall include, at minimum, one representative ambient background characterization monitoring event for priority pollutant constituents during the term of the permit. Data from the Delta Regional Monitoring Program may be utilized to characterize the receiving water in the permit renewal. The Discharger may request that the RMP perform sampling and laboratory analysis to address all or a portion of the monitoring under this Characterization Monitoring with the understanding that the Discharger will provide funding to the RMP sufficient to reimburse all of the costs of this additional effort. Alternatively, the Discharger may conduct any site-specific receiving water monitoring deemed appropriate by the Discharger and submit that monitoring data with this Characterization Monitoring. In general, monitoring data from samples collected in the immediate vicinity of the discharge will be given greater weight in permitting decisions than receiving water monitoring data collected at greater distances from the discharge point.

1. **Quarterly Monitoring**. Quarterly samples shall be collected from the effluent and upstream receiving water (EFF-001 and RSW-003) and analyzed for the constituents listed in Table E-8, below. Quarterly monitoring shall be conducted during 2016 (4 consecutive samples, evenly distributed throughout the year) and the results of such monitoring be submitted to the Central Valley Water Board with the monthly

self-monitoring reports. Each individual monitoring event shall provide representative sample results for the effluent and upstream receiving water.

2. **Concurrent Sampling.** Effluent and receiving water sampling shall be performed at approximately the same time, on the same date.

3. **Sample Type.** All receiving water samples shall be taken as grab samples. Effluent samples shall be taken as described in Table E-8, below.

Table E-8. Effluent and Receiving Water Characterization Monitoring

Parameter	Units	Effluent Sample Type	Maximum Reporting Level[1]
2- Chloroethyl vinyl ether	µg/L	Grab	1
Chloroform	µg/L	Grab	2
Chloromethane	µg/L	Grab	2
Dibromochloromethane	µg/L	Grab	0.5
Dichlorobromomethane	µg/L	Grab	0.5
Dichloromethane	µg/L	Grab	2
Ethylbenzene	µg/L	Grab	2
Hexachlorobenzene	µg/L	Grab	1
Hexachlorobutadiene	µg/L	Grab	1
Hexachloroethane	µg/L	Grab	1
Naphthalene	µg/L	Grab	10
Tetrachloroethene	µg/L	Grab	0.5
Toluene	µg/L	Grab	2
trans-1,2-Dichloroethylene	µg/L	Grab	1
Trichloroethene	µg/L	Grab	2
Vinyl chloride	µg/L	Grab	0.5
Methyl-tert-butyl ether (MTBE)	µg/L	Grab	
Trichlorofluoromethane	µg/L	Grab	
1,1,2-Trichloro-1,2,2-Trifluoroethane	µg/L	Grab	
Styrene	µg/L	Grab	
Xylenes	µg/L	Grab	
1,2-Benzanthracene	µg/L	Grab	5
1,2-Diphenylhydrazine	µg/L	Grab	1
2-Chlorophenol	µg/L	Grab	5
2,4-Dichlorophenol	µg/L	Grab	5
2,4-Dimethylphenol	µg/L	Grab	2
2,4-Dinitrophenol	µg/L	Grab	5
2,4-Dinitrotoluene	µg/L	Grab	5
2,4,6-Trichlorophenol	µg/L	Grab	10
2,6-Dinitrotoluene	µg/L	Grab	5
2-Nitrophenol	µg/L	Grab	10
2-Chloronaphthalene	µg/L	Grab	10
3,3'-Dichlorobenzidine	µg/L	Grab	5
3,4-Benzofluoranthene	µg/L	Grab	10
4-Chloro-3-methylphenol	µg/L	Grab	5
4,6-Dinitro-2-methylphenol	µg/L	Grab	10
4-Nitrophenol	µg/L	Grab	10
4-Bromophenyl phenyl ether	µg/L	Grab	10
4-Chlorophenyl phenyl ether	µg/L	Grab	5
Acenaphthene	µg/L	Grab	1

Parameter	Units	Effluent Sample Type	Maximum Reporting Level[1]
Acenaphthylene	µg/L	Grab	10
Anthracene	µg/L	Grab	10
Benzidine	µg/L	Grab	5
Benzo(a)pyrene (3,4-Benzopyrene)	µg/L	Grab	2
Benzo(g,h,i)perylene	µg/L	Grab	5
Benzo(k)fluoranthene	µg/L	Grab	2
Bis(2-chloroethoxy) methane	µg/L	Grab	5
Bis(2-chloroethyl) ether	µg/L	Grab	1
Bis(2-chloroisopropyl) ether	µg/L	Grab	10
Bis(2-ethylhexyl) phthalate	µg/L	Grab	5
Butyl benzyl phthalate	µg/L	Grab	10
Chrysene	µg/L	Grab	5
Di-n-butylphthalate	µg/L	Grab	10
Di-n-octylphthalate	µg/L	Grab	10
Dibenzo(a,h)-anthracene	µg/L	Grab	0.1
Diethyl phthalate	µg/L	Grab	10
Dimethyl phthalate	µg/L	Grab	10
Diuron	µg/L	Grab	
Fluoranthene	µg/L	Grab	10
Fluorene	µg/L	Grab	10
Hexachlorocyclopentadiene	µg/L	Grab	5
Indeno(1,2,3-c,d)pyrene	µg/L	Grab	0.05
Isophorone	µg/L	Grab	1
N-Nitrosodiphenylamine	µg/L	Grab	1
N-Nitrosodimethylamine	µg/L	Grab	5
N-Nitrosodi-n-propylamine	µg/L	Grab	5
Nitrobenzene	µg/L	Grab	10
Pentachlorophenol	µg/L	Grab	1
Phenanthrene	µg/L	Grab	5
Phenol	µg/L	Grab	1
Pyrene	µg/L	Grab	10
Aluminum	µg/L	24-hr Composite	
Antimony	µg/L	24-hr Composite	0.5
Arsenic	µg/L	24-hr Composite	1
Asbestos	µg/L	24-hr Composite	
Barium	µg/L	24-hr Composite	
Beryllium	µg/L	24-hr Composite	0.5
Cadmium	µg/L	24-hr Composite	0.25
Chromium (III)	µg/L	24-hr Composite	50
Chromium (VI)[2]	µg/L	24-hr Composite	10
Copper[2]	µg/L	24-hr Composite	0.5
Cyanide[2]	µg/L	24-hr Composite	5
Fluoride	µg/L	24-hr Composite	
Iron[2]	µg/L	24-hr Composite	
Lead	µg/L	24-hr Composite	0.5
Mercury	µg/L	Grab	0.5
Manganese	µg/L	24-hr Composite	
Molybdenum	µg/L	24-hr Composite	
Nickel	µg/L	24-hr Composite	1
Selenium	µg/L	24-hr Composite	1

Parameter	Units	Effluent Sample Type	Maximum Reporting Level[1]
Silver	µg/L	24-hr Composite	0.25
Thallium	µg/L	24-hr Composite	1
Tributyltin	µg/L	24-hr Composite	
Zinc	µg/L	24-hr Composite	1
4,4'-DDD	µg/L	24-hr Composite	0.05
4,4'-DDE	µg/L	24-hr Composite	0.05
4,4'-DDT	µg/L	24-hr Composite	0.01
alpha-Endosulfan	µg/L	24-hr Composite	0.02
alpha-Hexachlorocyclohexane (BHC)	µg/L	24-hr Composite	0.01
Alachlor	µg/L	24-hr Composite	
Aldrin	µg/L	24-hr Composite	0.005
beta-Endosulfan	µg/L	24-hr Composite	0.01
beta-Hexachlorocyclohexane	µg/L	24-hr Composite	0.005
Chlordane	µg/L	24-hr Composite	0.1
delta-Hexachlorocyclohexane	µg/L	24-hr Composite	0.005
Dieldrin	µg/L	24-hr Composite	0.01
Endosulfan sulfate	µg/L	24-hr Composite	0.05
Endrin	µg/L	24-hr Composite	0.01
Endrin Aldehyde	µg/L	24-hr Composite	0.01
Heptachlor	µg/L	24-hr Composite	0.01
Heptachlor Epoxide	µg/L	24-hr Composite	0.01
Lindane (gamma-Hexachlorocyclohexane)	µg/L	24-hr Composite	0.02
PCB-1016	µg/L	24-hr Composite	0.5
PCB-1221	µg/L	24-hr Composite	0.5
PCB-1232	µg/L	24-hr Composite	0.5
PCB-1242	µg/L	24-hr Composite	0.5
PCB-1248	µg/L	24-hr Composite	0.5
PCB-1254	µg/L	24-hr Composite	0.5
PCB-1260	µg/L	24-hr Composite	0.5
Toxaphene	µg/L	24-hr Composite	0.5
Atrazine	µg/L	24-hr Composite	
Bentazon	µg/L	24-hr Composite	
Carbofuran	µg/L	24-hr Composite	
2,4-D	µg/L	24-hr Composite	
Dalapon	µg/L	24-hr Composite	
1,2-Dibromo-3-chloropropane (DBCP)	µg/L	24-hr Composite	
Di(2-ethylhexyl)adipate	µg/L	24-hr Composite	
Dinoseb	µg/L	24-hr Composite	
Diquat	µg/L	24-hr Composite	
Endothal	µg/L	24-hr Composite	
Ethylene Dibromide	µg/L	24-hr Composite	
Glyphosate	µg/L	24-hr Composite	
Methoxychlor	µg/L	24-hr Composite	
Molinate (Ordram)	µg/L	24-hr Composite	
Oxamyl	µg/L	24-hr Composite	
Picloram	µg/L	24-hr Composite	
Simazine (Princep)	µg/L	24-hr Composite	
Thiobencarb	µg/L	24-hr Composite	

Parameter	Units	Effluent Sample Type	Maximum Reporting Level[1]
2,3,7,8-TCDD (Dioxin)	µg/L	24-hr Composite	
2,4,5-TP (Silvex)	µg/L	24-hr Composite	
Diazinon[2]	µg/L	24-hr Composite	
Chlorpyrifos[2]	µg/L	24-hr Composite	
Ammonia (as N)[2]	mg/L	24-hr Composite	
Boron	µg/L	24-hr Composite	
Chloride[2]	mg/L	24-hr Composite	
Flow[2]	MGD	Meter	
Hardness (as $CaCO_3$)[2]	mg/L	Grab	
Foaming Agents (MBAS)	µg/L	24-hr Composite	
Mercury, Methyl[2]	ng/L	Grab	
Nitrate (as N)[2]	mg/L	24-hr Composite	
Nitrite (as N)[2]	mg/L	24-hr Composite	
pH[2]	Std Units	Grab	
Phosphorus, Total (as P)	mg/L	24-hr Composite	
Specific conductance (EC)[2]	µmhos/cm	24-hr Composite	
Sulfate	mg/L	24-hr Composite	
Sulfide (as S)	mg/L	24-hr Composite	
Sulfite (as SO_3)	mg/L	24-hr Composite	
Temperature[2]	^oC	Grab	
Total Dissolved Solids (TDS)[2]	mg/L	24-hr Composite	
Total Organic Carbon	mg/L	24-hr Composite	
Dissolved Organic Carbon	mg/L	24-hr Composite	
Total Kjeldahl Nitrogen	mg/L	24-hr Composite	

[1] The reporting levels required in this table for priority pollutant constituents are established based on Section 2.4.2 and Appendix 4 of the SIP.
[2] Sampling only required at RSW-003.

X. REPORTING REQUIREMENTS

A. General Monitoring and Reporting Requirements

1. The Discharger shall comply with all Standard Provisions (Attachment D) related to monitoring, reporting, and recordkeeping.

2. Upon written request of the Central Valley Water Board, the Discharger shall submit a summary monitoring report. The report shall contain both tabular and graphical summaries of the monitoring data obtained during the previous year(s).

3. **Compliance Time Schedules.** For compliance time schedules included in the Order, the Discharger shall submit to the Central Valley Water Board, on or before each compliance due date, the specified document or a written report detailing compliance or noncompliance with the specific date and task. If noncompliance is reported, the Discharger shall state the reasons for noncompliance and include an estimate of the date when the Discharger will be in compliance. The Discharger shall notify the Central Valley Water Board by letter when it returns to compliance with the compliance time schedule.

4. The Discharger shall report to the Central Valley Water Board any toxic chemical release data it reports to the State Emergency Response Commission within 15 days of reporting

the data to the Commission pursuant to section 313 of the "Emergency Planning and Community Right to Know Act" of 1986.

B. Self-Monitoring Reports (SMR's)

1. The Discharger shall electronically submit SMR's using the State Water Board's California Integrated Water Quality System (CIWQS) Program Web site (http://www.waterboards.ca.gov/ciwqs/index.html). The CIWQS Web site will provide additional information for SMR submittal in the event there will be a planned service interruption for electronic submittal.

2. The Discharger shall report in the SMR the results for all monitoring specified in this MRP under sections III through IX. The Discharger shall submit monthly, quarterly, semiannual, and annual SMR's including the results of all required monitoring using USEPA-approved test methods or other test methods specified in this Order. SMR's are to include all new monitoring results obtained since the last SMR was submitted. If the Discharger monitors any pollutant more frequently than required by this Order, the results of this monitoring shall be included in the calculations and reporting of the data submitted in the SMR.

3. Monitoring periods and reporting for all required monitoring shall be completed according to the following schedule:

Table E-9. Monitoring Periods and Reporting Schedule

Sampling Frequency	Monitoring Period Begins On…	Monitoring Period	SMR Due Date
Continuous	Permit effective date	All	Submit with monthly SMR
1/Day	Permit effective date	(Midnight through 11:59 PM) or any 24-hour period that reasonably represents a calendar day for purposes of sampling.	Submit with monthly SMR
1/Week	Permit effective date	Sunday through Saturday	Submit with monthly SMR
2/Week	Permit effective date	Sunday through Saturday	Submit with monthly SMR
1/Month	Permit effective date	First day of calendar month through last day of calendar month	First day of second calendar month following month of sampling
1/Quarter	Permit effective date	1 January through 31 March 1 April through 30 June 1 July through 30 September 1 October through 31 December	1 May 1 August 1 November 1 February of following year
2/Year	Permit effective date	1 January through 30 June 1 July through 31 December	1 August 1 February
1/Year	Permit effective date	1 January through 31 December	1 February of following year

4. **Reporting Protocols**. The Discharger shall report with each sample result the applicable Reporting Level (RL) and the current laboratory's Method Detection Limit (MDL), as determined by the procedure in 40 CFR part 136.

The Discharger shall report the results of analytical determinations for the presence of chemical constituents in a sample using the following reporting protocols:

a. Sample results greater than or equal to the RL shall be reported as measured by the laboratory (i.e., the measured chemical concentration in the sample).

b. Sample results less than the RL, but greater than or equal to the laboratory's MDL, shall be reported as "Detected, but Not Quantified," or DNQ. The estimated chemical concentration of the sample shall also be reported.

   For the purposes of data collection, the laboratory shall write the estimated chemical concentration next to DNQ. The laboratory may, if such information is available, include numerical estimates of the data quality for the reported result. Numerical estimates of data quality may be percent accuracy (± a percentage of the reported value), numerical ranges (low to high), or any other means considered appropriate by the laboratory.

c. Sample results less than the laboratory's MDL shall be reported as "Not Detected," or ND.

d. Dischargers are to instruct laboratories to establish calibration standards so that the Minimum Level (ML) value (or its equivalent if there is differential treatment of samples relative to calibration standards) is the lowest calibration standard. At no time is the Discharger to use analytical data derived from extrapolation beyond the lowest point of the calibration curve.

5. **Multiple Sample Data**. When determining compliance with an AMEL, AWEL, or MDEL for priority pollutants and more than one sample result is available, the Discharger shall compute the arithmetic mean unless the data set contains one or more reported determinations of "Detected, but Not Quantified" (DNQ) or "Not Detected" (ND). In those cases, the Discharger shall compute the median in place of the arithmetic mean in accordance with the following procedure:

   a. The data set shall be ranked from low to high, ranking the reported ND determinations lowest, DNQ determinations next, followed by quantified values (if any). The order of the individual ND or DNQ determinations is unimportant.

   b. The median value of the data set shall be determined. If the data set has an odd number of data points, then the median is the middle value. If the data set has an even number of data points, then the median is the average of the two values around the middle unless one or both of the points are ND or DNQ, in which case the median value shall be the lower of the two data points where DNQ is lower than a value and ND is lower than DNQ.

6. The Discharger shall submit SMR's in accordance with the following requirements:

   a. The Discharger shall arrange all reported data in a tabular format. The data shall be summarized to clearly illustrate whether the facility is operating in compliance with interim and/or final effluent limitations. The Discharger is not required to duplicate the submittal of data that is entered in a tabular format within CIWQS. When electronic submittal of data is required and CIWQS does not provide for entry into a tabular format within the system, the Discharger shall electronically submit the data in a tabular format as an attachment.

   b. The Discharger shall attach a cover letter to the SMR. The information contained in the cover letter shall clearly identify violations of the WDR's; discuss corrective actions taken or planned; and the proposed time schedule for corrective actions.

Identified violations must include a description of the requirement that was violated and a description of the violation.

7. The Discharger shall submit in the SMR's calculations and reports in accordance with the following requirements:

   a. **Average Dry Weather Flow**. The Discharger shall calculate and report the average dry weather flow for the effluent. The average dry weather flow shall be calculated as specified in Section VII.C and reported in the December SMR.

   b. **Mass Loading Limitations**. For BOD_5, TSS, and ammonia, the Discharger shall calculate and report the mass loading (lbs/day) in the SMRs. The mass loading shall be calculated as follows:

   Mass Loading (lbs/day) = Flow (MGD) x Concentration (mg/L) x 8.34

   When calculating daily mass loading, the daily average flow and constituent concentration shall be used. For weekly average mass loading, the weekly average flow and constituent concentration shall be used. For monthly average mass loading, the monthly average flow and constituent concentration shall be used.

   b. **Removal Efficiency (BOD_5 and TSS).** The Discharger shall calculate and report the percent removal of BOD_5 and TSS in the SMRs. The percent removal shall be calculated as specified in Section VII.A. of the Limitations and Discharge Requirements.

   c. **Total Coliform Organisms Effluent Limitations**. The Discharger shall calculate and report the 7-day median of total coliform organisms for the effluent. The 7-day median of total coliform organisms shall be calculated as specified in Section VII.D. of the Limitations and Discharge Requirements.

   d. **Total Calendar Annual Mass Loading Mercury Effluent Limitations**. The Discharger shall calculate and report the total calendar annual mercury mass loading for the effluent in the December SMR. The total calendar year annual mass loading shall be calculated as specified in Section VII.B of the Limitations and Discharge Requirements.

   e. **Turbidity Receiving Water Limitations**. The Discharger shall calculate and report the turbidity difference in the receiving water between receiving water monitoring stations RSW-001 and RSW-002 applicable to the natural turbidity condition specified in Section V.A.17.a-e. of the Limitations and Discharge Requirements.

   f. **Temperature Receiving Water Limitations**. The Discharger shall calculate and report the temperature change in the receiving water between Monitoring Locations RSW-001 and RSW-002.

   g. **Chlorpyrifos and Diazinon Effluent Limitation**. The Discharger shall calculate and report the value of S_{AMEL} and S_{MDEL} for the effluent, using the equation in Effluent Limitations IV.A.1.g and consistent with the Compliance Determination Language in Section VII.G.

   h. **Temperature Effluent Limitation**. For every day receiving water temperature samples are collected at RSW-001, the Discharger shall calculate and report the temperature difference between the effluent and upstream receiving water based on the difference in the temperature at EFF-001 and RSW-001.

C. Discharge Monitoring Reports (DMR's) – Not Applicable

D. Other Reports

1. **Special Study Reports and Progress Reports.** As specified in the compliance time schedules required in the Special Provisions contained in section VI of the Order, special study and progress reports shall be submitted in accordance with the following reporting requirements. At minimum, the progress reports shall include a discussion of the status of final compliance, whether the Discharger is on schedule to meet the final compliance date, and the remaining tasks to meet the final compliance date.

Table E-10. Reporting Requirements for Special Provisions Reports

Special Provision	Reporting Requirements
Salinity Evaluation and Minimization Plan (Special Provision VI.C.3.c)	1 December 2014
Pollution Prevention Plan for Mercury and Compliance Schedule for Methylmercury, Progress Reports (Special Provisions VI.B.3.a. and VI.C.7.a.)	30 January, annually
Phase 1 Methylmercury Control Study Progress Report (Special Provision VI.C.7.a)	20 October 2015

2. The Discharger shall report the results of any special studies, acute and chronic toxicity testing, TRE/TIE, and Pollution Prevention Plan required by Special Provisions – VI.C.2. The Discharger shall report the progress in satisfaction of compliance schedule dates specified in Special Provisions – VI.C.7. The Discharger shall submit reports with the first monthly SMR scheduled to be submitted on or immediately following the report due date.

3. **Within 60 days of permit adoption**, the Discharger shall submit a report outlining reporting levels (RLs), method detection limits, and analytical methods for approval. The Discharger shall comply with the monitoring and reporting requirements for CTR constituents as outlined in section 2.3 and 2.4 of the SIP. The maximum required reporting levels for priority pollutant constituents shall be based on the Minimum Levels (MLs) contained in Appendix 4 of the SIP, determined in accordance with Section 2.4.2 and Section 2.4.3 of the SIP. In accordance with Section 2.4.2 of the SIP, when there is more than one ML value for a given substance, the Central Valley Water Board shall include as RLs, in the permit, all ML values, and their associated analytical methods, listed in Appendix 4 that are below the calculated effluent limitation. The Discharger may select any one of those cited analytical methods for compliance determination. If no ML value is below the effluent limitation, then the Central Valley Water Board shall select as the RL, the lowest ML value, and its associated analytical method, listed in Appendix 4 for inclusion in the permit. Table E-8 provides required maximum reporting levels in accordance with the SIP.

4. **Annual Operations Report.** By 30 January of each year, the Discharger shall submit a written report to the Executive Officer containing the following:

   a. The names, certificate grades, and general responsibilities of all persons employed at the Facility.

   b. The names and telephone numbers of persons to contact regarding the plant for emergency and routine situations.

c. A statement certifying when the flow meter(s) and other monitoring instruments and devices were last calibrated, including identification of who performed the calibration.

d. A statement certifying whether the current operation and maintenance manual, and contingency plan, reflect the wastewater treatment plant as currently constructed and operated, and the dates when these documents were last revised and last reviewed for adequacy.

e. The Discharger may also be requested to submit an annual report to the Central Valley Water Board with both tabular and graphical summaries of the monitoring data obtained during the previous year. Any such request shall be made in writing. The report shall discuss the compliance record. If violations have occurred, the report shall also discuss the corrective actions taken and planned to bring the discharge into full compliance with the waste discharge requirements.

ATTACHMENT F – FACT SHEET

Contents

I. Permit Information F-3
II. Facility Description F-4
A. Description of Wastewater and Biosolids Treatment and Controls F-4
B. Discharge Points and Receiving Waters F-4
C. Summary of Existing Requirements and Self-Monitoring Report (SMR) Data F-5
D. Compliance Summary F-7
E. Planned Changes – Not Applicable F-8
III. Applicable Plans, Policies, and Regulations F-9
A. Legal Authorities F-9
B. California Environmental Quality Act (CEQA) F-9
C. State and Federal Laws, Regulations, Policies, and Plans F-9
D. Impaired Water Bodies on CWA 303(d) List F-12
E. Other Plans, Polices and Regulations F-13
IV. Rationale For Effluent Limitations and Discharge Specifications F-14
A. Discharge Prohibitions F-15
B. Technology-Based Effluent Limitations F-15
1. Scope and Authority F-15
2. Applicable Technology-Based Effluent Limitations F-16
C. Water Quality-Based Effluent Limitations (WQBELs) F-17
1. Scope and Authority F-17
2. Applicable Beneficial Uses and Water Quality Criteria and Objectives F-17
3. Determining the Need for WQBELs F-26
4. WQBEL Calculations F-55
5. Whole Effluent Toxicity (WET) F-57
D. Final Effluent Limitation Considerations F-60
1. Mass-based Effluent Limitations F-60
2. Averaging Periods for Effluent Limitations F-60
3. Satisfaction of Anti-Backsliding Requirements F-61
4. Antidegradation Policies F-64
5. Stringency of Requirements for Individual Pollutants F-64
E. Interim Effluent Limitations F-66
F. Land Discharge Specifications – Not Applicable F-67
G. Recycling Specifications – Not Applicable F-67
V. Rationale for Receiving Water Limitations F-67
A. Surface Water F-67
B. Groundwater F-70
VI. Rationale for Provisions F-70
A. Standard Provisions F-70
B. Special Provisions F-71
1. Reopener Provisions F-71
2. Special Studies and Additional Monitoring Requirements F-72
3. Best Management Practices and Pollution Prevention F-76
4. Construction, Operation, and Maintenance Specifications F-78
5. Special Provisions for Municipal Facilities (POTWs Only) F-79
6. Other Special Provisions F-80
7. Compliance Schedules F-80
VII. Rationale for Monitoring and Reporting Requirements F-82

A. Influent Monitoring F-82
B. Effluent Monitoring F-82
C. Whole Effluent Toxicity Testing Requirements F-83
D. Receiving Water Monitoring F-84
E. Other Monitoring Requirements F-86
VIII. Public Participation F-87
A. Notification of Interested Parties F-87
B. Written Comments F-87
C. Public Hearing F-87
D. Reconsideration of Waste Discharge Requirements F-88
E. Information and Copying F-88
F. Register of Interested Persons F-88
G. Additional Information F-88

Tables

Table F-1. Facility Information F-3
Table F-2. Historic Effluent Limitations and Monitoring Data – Discharge Point 001 ..... F-5
Table F-3. Historic Effluent Limitations and Monitoring Data – Discharge Point 003 ..... F-6
Table F-4. Historic Effluent Limitations and Monitoring Data – Discharge Point 004 ..... F-7
Table F-5. Basin Plan Beneficial Uses F-9
Table F-6. 303 (d) List for the Southern Delta F-13
Table F-7. Summary of Technology-based Effluent Limitations F-16
Table F-8. Zinc ECA Evaluation F-23
Table F-9. Copper ECA Evaluation F-24
Table F-10. Cadmium ECA Evaluation F-25
Table F-11. Summary of ECA Evaluations for CTR Hardness-dependent Metals F-26
Table F-12. Lead RPA F-35
Table F-13. Summary of Effluent and Receiving Water Data for Lead F-35
Table F-14. Summary of Effluent and Receiving Water Data for Selenium F-37
Table F-15. Summary of Effluent and Receiving Water Data for Thallium F-38
Table F-16. Copper RPA F-44
Table F-17. Salinity Water Quality Criteria/Objectives F-52
Table F-18. Summary of Water Quality-Based Effluent Limitations F-56
Table F-19. Whole Effluent Chronic Toxicity Testing Results F-58
Table F-20. Summary of Monitoring Data for Constituents of Concern at Discharge Point 003 ..... F-63
Table F-21. Summary of Final Effluent Limitations F-65
Table F-22. Interim Mercury Effluent Limitation Calculation Summary F-67

ATTACHMENT F – FACT SHEET

As described in section I, the Central Valley Water Board incorporates this Fact Sheet as findings of the Central Valley Water Board supporting the issuance of this Order. This Fact Sheet includes the legal requirements and technical rationale that serve as the basis for the requirements of this Order.

This Order has been prepared under a standardized format to accommodate a broad range of discharge requirements for Dischargers in California. Only those sections or subsections of this Order that are specifically identified as “not applicable” have been determined not to apply to this Discharger. Sections or subsections of this Order not specifically identified as “not applicable” are fully applicable to this Discharger.

I. PERMIT INFORMATION

The following table summarizes administrative information related to the facility.

Table F-1. Facility Information

WDID	5B390100001
Discharger	California Department of Corrections and Rehabilitation
Name of Facility	Deuel Vocational Institution
Facility Address	23500 Kasson Road
	Tracy, CA 95376
	San Joaquin County
Facility Contact, Title and Phone	Terry Bettencourt, Correctional Plant Manager, (209) 830-3932
Authorized Person to Sign and Submit Reports	Terry Bettencourt, Correctional Plant Manager, (209) 830-3932
Mailing Address	Same as Facility Address
Billing Address	Same as Facility Address
Type of Facility	Publicly Owned Treatment Works (POTW)
Major or Minor Facility	Minor
Threat to Water Quality	1
Complexity	A
Pretreatment Program	Not Applicable
Recycling Requirements	Not Applicable
Facility Permitted Flow	0.62 million gallons per day (MGD), average dry weather flow
Facility Design Flow	0.70 MGD, average dry weather flow
Watershed	Sacramento – San Joaquin Delta
Receiving Water	Deuel Drain
Receiving Water Type	Estuary

A. The California Department of Corrections and Rehabilitation (hereinafter Discharger) is the owner and operator of a wastewater collection, treatment, and disposal system, and provides sewerage service to the Deuel Vocational Institution (hereinafter Facility), a California prison facility.

For the purposes of this Order, references to the “discharger” or “permittee” in applicable federal and state laws, regulations, plans, or policy are held to be equivalent to references to the Discharger herein.

B. The Facility discharges wastewater to Deuel Drain, a water of the United States, tributary to the San Joaquin River via Paradise Cut within the Sacramento – San Joaquin Delta. The Discharger was previously regulated by Order R5-2008-0164 and National Pollutant Discharge Elimination System (NPDES) Permit No. CA0078093 which was adopted on 24 October 2008 and expired on 1 October 2013. Attachment B provides a map of the area around the Facility. Attachment C provides a flow schematic of the Facility.

Prior to making any change in the point of discharge, place of use, or purpose of use of treated wastewater that results in a decrease of flow in any portion of a watercourse, the Discharger must file a petition with the State Water Board, Division of Water Rights, and receive approval for such a change. The State Water Board retains the jurisdictional authority to enforce such requirements under Water Code section 1211.

C. The Discharger filed a report of waste discharge (ROWD) and submitted an application for reissuance of its WDR's and NPDES permit on 9 July 2013. The application was deemed complete on 19 August 2013. A site visit was conducted on 4 June 2013, to observe operations and collect additional data to develop permit limitations and requirements for waste discharge.

II. FACILITY DESCRIPTION

The Facility is a correctional facility located east of Tracy, CA. The Discharger provides sewerage service for the Deuel Vocational Institution and serves a population of approximately 3,132, which includes inmates and staff, which is serviced by a sanitary wastewater treatment plant. The design average dry weather flow capacity of the Facility is 0.70 MGD.

A. Description of Wastewater and Biosolids Treatment and Controls

The Discharger constructed upgrades to their tertiary treatment plant and began discharging from the upgraded plant on 22 September 2010. The upgraded treatment system at the Facility consists of mechanical bar screening, grit removal, two drum screens, biological treatment using anoxic and aeration basins including nitrification and denitrification, four membrane bioreactor (MBR) filtration tanks, ultraviolet light (UV) disinfection, and three cooling towers. Solids at the Facility are digested in an aerobic digester and dewatered in one of two belt presses, then hauled offsite approximately every 3 weeks. Effluent is discharged from the Facility to Deuel Drain at Discharge Point 001.

Industrial storm water commingled with groundwater may be discharged to Deuel Drain at Discharge Points 003 and 004 (also referred to as Storm 1 and Storm 2). Order R5-2008-0164 regulated storm water discharges from Discharge Points 003 and 004. The State Water Board adopted the *General Permit for Waste Discharge Requirements (WDR's) for Storm Water Discharges from Small Municipal Separate Storm Sewer Systems (MS4s)* (Order 2013-0001-DWQ) on 5 February 2013. The Discharger submitted an NOI and was enrolled for coverage under General Order 2013-0001-DWQ as of 19 July 2013. General Order 2013-0001-DWQ contains provisions requiring the Discharger to prohibit non-storm water discharges through the MS4; detect and eliminate illicit discharges; and implement a pollution prevention/good housekeeping program. Compliance with the requirements of General Order 2013-0001-DWQ is expected to effectively prevent or reduce the amount of pollutant runoff at Discharge Points 003 and 004. Therefore, Discharge Points 003 and 004 are no longer regulated by this NPDES permit, and are regulated under Order 2013-0001-DWQ.

B. Discharge Points and Receiving Waters

1. The Facility is located in Section 20, T2S, R6E, MDB&M, as shown in Attachment B, a part of this Order.

2. Treated municipal wastewater is discharged at Discharge Point 001 to Deuel Drain, a water of the United States and a tributary to the San Joaquin River at a point latitude 37° 45' 02" N and longitude 121° 19' 35" W.

C. Summary of Existing Requirements and Self-Monitoring Report (SMR) Data

1. Effluent limitations contained in Order R5-2008-0164 for discharges from Discharge Point 001 (Monitoring Location EFF-001) and representative monitoring data from the term of Order R5-2008-0164 are as follows:

Table F-2. Historic Effluent Limitations and Monitoring Data – Discharge Point 001

Parameter	Units	Effluent Limitation			Monitoring Data (22 December 2010 – 30 April 2013)		
		Average Monthly	Average Weekly	Maximum Daily	Highest Average Monthly Discharge	Highest Average Weekly Discharge	Highest Daily Discharge
Average Dry Weather Flow	MGD	0.62	--	--	--	--	0.64
Conventional Pollutants							
Biochemical Oxygen Demand (5-day @ 20ºC)	mg/L	10[1]	15[1]	20[1]	0.96	1.95	3.4
		20[2]	30[2]	40[2]			
	lbs/day[3]	52[1]	78[1]	103[1]	3	5.7	10.8
		103[2]	155[2]	207[2]			
	% removal	85	--	--	99[4]	--	--
pH	standard units	--	--	6.5 – 8.5	--	--	6.6 – 8.3
Total Suspended Solids	mg/L	10[1]	15[1]	20[1]	2.4	6.1	12
		20[2]	30[2]	40[2]			
	lbs/day[3]	52[1]	78[1]	103[1]	9	22	43
		103[2]	155[2]	207[2]			
	% removal	85	--	--	98[4]	--	--
Priority Pollutants							
Bromoform	µg/L	4.3	--	5.8	<0.1	--	<0.1
Chlorodibromomethane	µg/L	0.41	--	0.58	<0.08	--	<0.08
Dichlorobromomethane	µg/L	0.56	--	0.82	0.075	--	J 0.1
Non-Conventional Pollutants							
Ammonia Nitrogen, Total (as N)	mg/L	0.7[1]	--	2.2[1]	0.51	--	1.28
		--	--	4.4[2]			
	lbs/day[3]	3.6[1]		11.4[1]	NR	--	NR
		--	--	22.8[2]			
Chlorine, Total Residual	mg/L	--	0.11[5]	0.019	--	--	<0.01
Electrical Conductivity @ 25ºC	µmhos/cm	700[6]	--	--	3,550	--	--
		1,000[7]	--	--	3,440	--	--
Nitrate Nitrogen, Total (as N)	mg/L	10	--	--	8.3	--	--
Temperature	°F	--	--	20[8]	--	--	18[9]

Parameter	Units	Effluent Limitation			Monitoring Data (22 December 2010 – 30 April 2013)		
		Average Monthly	Average Weekly	Maximum Daily	Highest Average Monthly Discharge	Highest Average Weekly Discharge	Highest Daily Discharge
Total Coliform Organisms	MPN/ 100 mL	--	2.2[10]	23[11]/240[12]	--	--	23
Acute Toxicity	% survival	--	--	70[13]/90[14]	--	--	95[4]

NR = Not Reported

1 Final effluent limitation effective 31 December 2009.
2 Interim effluent limitation effective 13 December 2008 through 31 December 2009.
3 Based on a design flow of 0.62 MGD.
4 Represents the minimum reported result.
5 Applied as a 4-day average effluent limitation.
6 Applies from 1 April through 31 August.
7 Applies from 1 September through 31 March.
8 The maximum effluent temperature shall not exceed the natural receiving water by more than 20°F.
9 Represents the maximum observed temperature difference between the effluent and upstream receiving water at Monitoring Locations EFF-001 and RSW-001.
10 Applied as a 7-day median effluent limitation.
11 Effluent total coliform organisms are not to exceed 23 MPN/100mL more than once in any 30-day period.
12 Applied as an instantaneous maximum effluent limitation.
13 Minimum for any one bioassay.
14 Median for any three consecutive bioassays.

2. Effluent limitations contained in Order R5-2008-0164 for discharges from Discharge Point 003 (Monitoring Location EFF-003) and representative monitoring data from the term of Order R5-2008-0164 are as follows:

Table F-3. Historic Effluent Limitations and Monitoring Data – Discharge Point 003

Parameter	Units	Effluent Limitation			Monitoring Data (December 2008 – April 2013)		
		Average Monthly	Average Weekly	Maximum Daily	Highest Average Monthly Discharge	Highest Average Weekly Discharge	Highest Daily Discharge
Priority Pollutants							
Benzene	µg/L	0.5	--	1.0	J 1.6	--	J 1.6
Bromoform	µg/L	0.5	--	1.0	J 0.4	--	J 0.4
Chlorodibromo-methane	µg/L	0.5	--	1.0	J 0.4	--	J 0.4
Chloroform	µg/L	0.5	--	1.0	J 0.2	--	J 0.2
Ethylbenzene	µg/L	0.5	--	1.0	J 0.27	--	J 0.27
Tetrachloroethylene	µg/L	0.5	--	1.0	0.5	--	0.5
Toluene	µg/L	0.5	--	1.0	J 0.6	--	J 0.6
Trichloroethylene	µg/L	0.5	--	1.0	0.7	--	0.7
Non-Conventional Pollutants							
Cis-1,2-Dichloroethylene	µg/L	0.5	--	1.0	J 0.2	--	J 0.2
Xylene	µg/L	0.5	--	1.0	J 0.3	--	J 0.3

3. Effluent limitations contained in Order R5-2008-0164 for discharges from Discharge Point 004 (Monitoring Location EFF-004) are as follows. The Discharger did not discharge at Discharge Point 004 during the term of Order R5-2008-0164, therefore, effluent monitoring data is not available.

Table F-4. Historic Effluent Limitations and Monitoring Data – Discharge Point 004

Parameter	Units	Effluent Limitation		
		Average Monthly	Average Weekly	Maximum Daily
Priority Pollutants				
Benzene	µg/L	0.5	--	1.0
Bromoform	µg/L	0.5	--	1.0
Chloroform	µg/L	0.5	--	1.0
Dibromochloromethane	µg/L	0.5	--	1.0
Ethylbenzene	µg/L	0.5	--	1.0
Tetrachloroethylene	µg/L	0.5	--	1.0
Toluene	µg/L	0.5	--	1.0
Trichloroethylene	µg/L	0.5	--	1.0
Non-Conventional Pollutants				
Cis-1,2-Dichloroethylene	µg/L	0.5	--	1.0
Xylene	µg/L	0.5	--	1.0

D. Compliance Summary

1. The Central Valley Water Board issued Administrative Civil Liability (ACL) Complaint No. R5-2009-0571 on 12 November 2009 which proposed to assess a civil liability of $6,000 against the Discharger for violations of effluent limitations in Order R5-2008-0164 for electrical conductivity and dichlorobromomethane that occurred from 1 January 2009 through 7 July 2009. The Discharger settled this ACL by payment.

2. The Central Valley Water Board issued ACL Complaint No. R5-2010-0526 on 25 June 2010 which proposed to assess a civil liability of $36,000 against the Discharger for violations of effluent limitations in Order R5-2008-0164 for electrical conductivity, dichlorobromomethane, nitrate, and temperature that occurred from 30 April 2009 through 31 March 2010. The Discharger settled this ACL by payment.

3. The Central Valley Water Board issued ACL Complaint No. R5-2010-0549 on 4 November 2010 which proposed to assess a civil liability of $36,000 against the Discharger for violations of effluent limitations in Order R5-2008-0164 for benzene, electrical conductivity, and nitrate that occurred from 2 March 2010 through 31 August 2010. The Discharger settled this ACL by payment.

4. The Central Valley Water Board issued ACL Complaint No. R5-2011-0575 on 6 May 2011 which proposed to assess a civil liability of $21,000 against the Discharger for violations of effluent limitations in Order R5-2008-0164 for electrical conductivity and nitrate that occurred from 31 July 2010 through 28 February 2011. The Discharger settled this ACL by payment.

5. The Central Valley Water Board conducted a Compliance Evaluation Inspection (CEI) on 14 December 2010. Major findings from the CEI are as follows:

   a. Order R5-2008-0164 section VI.C.3.a required the Discharger to maintain an updated Storm Water Pollution Prevention Plan (SWPPP). The Facility SWPPP

had last been updated on 22 January 2009 and did not include information in the plan or on the drainage map regarding the new Facility which began operating in September 2010.

b. Order R5-2008-0164 Provision V.A.5.b requires the surface water temperature of the receiving water not rise greater than 4°F above the natural temperature of the receiving water at any time or place. In the September 2010 SMR, the Discharger reported that on 28 September 2010 the temperature at Monitoring Location RSW-002 was 73.6°F, which was 4.1 degrees higher than the surface water temperature at Monitoring Location RSW-001.

c. Order R5-2008-0164, Monitoring and Reporting Program Provision I.D requires all monitoring instruments and devices shall be properly maintained and calibrated at least once per year. Records showing that the flow meters were properly calibrated upon installation were not available for review.

d. Order R5-2008-0164, Attachment D, Standard Provisions, Provision III.B requires that monitoring results must be conducted according to test procedures under Part 136. USEPA regulations at 136.3 require samples to be preserved at less than or equal to 6°C. Neither the influent nor the effluent composite samplers were equipped with thermometers. Temperatures for samples were reported out of range on 4 November 2010 for samples collected 25 October 2010 as well as for third quarter acute toxicity analyses for Discharge Point 001 and chronic toxicity analyses for Monitoring Location RSW-001.

e. Order R5-2008-0164, Monitoring and Reporting Program, Provision III.A.1, Table E-2 requires the Discharger to monitor influent flow continuously. In the October 2010 SMR, the Discharger reported that loadings could not be calculated for 5-day biochemical oxygen demand (BOD_5), total suspended solids (TSS), and total dissolved solids (TDS) because the influent flow meter had been unplugged by a worker knocking out the plug resulting in lower flow rate meter readings.

f. Order R5-2008-0164, Monitoring and Reporting Program, Provision IV.A.1, Table E-3 requires the Discharger to monitor once per month for methylmercury at Discharge Point 001. No sample for methylmercury was reported in the October 2010 SMR.

g. Order R5-2008-0164, Monitoring and Reporting Program, Provision VIII.B.1, Table E-8 requires the Discharger to monitor multiple parameters once per quarter for groundwater Monitoring Locations GW-001 through GW-006. Since 2009, the Discharger only conducted groundwater monitoring for the first and second quarters for 2009 and 2010.

h. Order R5-2008-0164, Monitoring and Reporting Program, Provision I.B instructs that a non-certified laboratory will be accepted provided a Quality Assurance-Quality Control Program is instituted by the laboratory. The Discharger had not yet developed a written Quality Assurance-Quality Control Program.

E. Planned Changes – Not Applicable

III. APPLICABLE PLANS, POLICIES, AND REGULATIONS

The requirements contained in this Order are based on the requirements and authorities described in this section.

A. Legal Authorities

This Order serves as WDR's pursuant to article 4, chapter 4, division 7 of the California Water Code (commencing with section 13260). This Order is also issued pursuant to section 402 of the federal Clean Water Act (CWA) and implementing regulations adopted by the U.S. EPA and chapter 5.5, division 7 of the Water Code (commencing with section 13370). It shall serve as an NPDES permit for point source discharges from this facility to surface waters.

B. California Environmental Quality Act (CEQA)

Under Water Code section 13389, this action to adopt an NPDES permit is exempt from the provisions of Chapter 3 of CEQA, (commencing with section 21100) of Division 13 of the Public Resources Code.

C. State and Federal Laws, Regulations, Policies, and Plans

1. **Water Quality Control Plans**. Requirements of this Order specifically implement the applicable Water Quality Control Plans.

   a. **Basin Plan**. The Central Valley Water Board adopted Water Quality Control Plan, Fourth Edition (Revised October 2011), for the Sacramento and San Joaquin River Basins (hereinafter Basin Plan) that designates beneficial uses, establishes water quality objectives, and contains implementation programs and policies to achieve those objectives for all waters addressed through the plan. Requirements in this Order implement the Basin Plan.

   The Basin Plan in Table II-1, Section II, identifies present and potential uses for the Sacramento – San Joaquin Delta, which includes Deuel Drain. In addition, the Basin Plan implements State Water Board Resolution 88-63, which established state policy that all waters, with certain exceptions, should be considered suitable or potentially suitable for municipal or domestic supply. Thus, beneficial uses applicable to Deuel Drain are as follows:

Table F-5. Basin Plan Beneficial Uses

Discharge Point	Receiving Water Name	Beneficial Use(s)
001	Deuel Drain	Existing: Municipal and domestic supply (MUN); agricultural supply, including stock watering (AGR); industrial service supply (IND); industrial process supply (PROC); water contact recreation (REC-1); non-contact water recreation, including aesthetic enjoyment (REC-2); warm freshwater habitat (WARM); cold freshwater habitat (COLD); warm and cold migration of aquatic organisms (MIGR); warm spawning, reproduction, and/or early development (SPWN); wildlife habitat (WILD); and navigation (NAV).

   b. **Bay-Delta Plan**. The *Water Quality Control Plan for the San Francisco Bay/Sacramento-San Joaquin Delta Estuary* (Bay-Delta Plan) was adopted in May 1995 by the State Water Board superseding the 1991 Bay-Delta Plan. The Bay-Delta Plan identifies the beneficial uses of the estuary and includes objectives for flow, salinity, and endangered species protection.

The State Water Board adopted Decision 1641 (D-1641) on 29 December 1999, and revised on 15 March 2000. D-1641 implements flow objectives for the Bay-Delta Estuary, approves a petition to change points of diversion of the Central Valley Project and the State Water Project in the Southern Delta, and approves a petition to change places of use and purposes of use of the Central Valley Project. The water quality objectives of the Bay-Delta Plan are implemented as part of this Order.

The Bay-Delta Plan includes water quality objectives for electrical conductivity for the South Delta in the vicinity of the discharge[1]. On 1 June 2011, the Superior Court for Sacramento County entered a judgment and peremptory writ of mandate in the matter of City of Tracy v. State Water Resources Control Board (Case No; 34-2009-8000-392-CU-WM-GDS), ruling that the South Delta salinity objectives shall not apply to the City of Tracy and other municipal dischargers pending reconsideration of the South Delta salinity objectives and adoption of a proper program of implementation that includes municipal dischargers. The State Water Board is currently considering new salinity and flow objectives in the South Delta that will address the Court Order. Therefore, at the time this Order was adopted the South Delta salinity objectives were not applicable to the Discharger.

c. **Thermal Plan.** The State Water Board adopted the *Water Quality Control Plan for Control of Temperature in the Coastal and Interstate Waters and Enclosed Bays and Estuaries of California* (Thermal Plan) on 7 January 1971, and amended this plan on 18 September 1975. This plan contains temperature objectives for surface waters. The Thermal Plan is applicable to the discharge from the Facility. For the purposes of the Thermal Plan, the discharge is considered to be an *Existing Discharge of Elevated Temperature Waste to an Estuary*, as defined in the Thermal Plan. Therefore, the Discharger must meet the water quality objective at Section 5.A(1) of the Thermal Plan, which requires compliance with the following:

   i. The maximum temperature shall not exceed the natural receiving water temperature by more than 20°F.

   ii. Elevated temperature waste discharges either individually or combined with other discharges shall not create a zone, defined by water temperatures of more than 1°F above natural receiving water temperature, which exceeds 25 percent of the cross-sectional area of a main river channel at any point.

   iii. No discharge shall cause a surface water temperature rise greater than 4°F above the natural temperature of the receiving waters at any time or place.

   iv. Additional limitations shall be imposed when necessary to assure protection of beneficial uses.

   Requirements of this Order implement the Thermal Plan.

d. **Sediment Quality.** The State Water Board adopted the *Water Quality Control Plan for Enclosed Bays and Estuaries – Part 1, Sediment Quality* on 16 September 2008, and it became effective on 25 August 2009. This plan supersedes other narrative sediment quality objectives, and establishes new sediment quality objectives and related implementation provisions for specifically defined sediments in most bays and estuaries. Requirements of this Order implement sediment quality objectives of this Plan.

[1] The Bay-Delta Plan includes water quality objectives at three locations in the South Delta for EC. The water quality objectives are a 14-day running average EC of 700 µmhos/cm from 1 April – 31 August and a 14-day running average EC of 1,000 µmhos/cm from 1 September – 31 March.

2. **National Toxics Rule (NTR) and California Toxics Rule (CTR).** U.S. EPA adopted the NTR on 22 December 1992, and later amended it on 4 May 1995 and 9 November 1999. About forty criteria in the NTR applied in California. On 18 May 2000, U.S. EPA adopted the CTR. The CTR promulgated new toxics criteria for California and, in addition, incorporated the previously adopted NTR criteria that were applicable in the state. The CTR was amended on 13 February 2001. These rules contain federal water quality criteria for priority pollutants.

3. **State Implementation Policy.** On 2 March 2000, the State Water Board adopted the Policy for Implementation of Toxics Standards for Inland Surface Waters, Enclosed Bays, and Estuaries of California (State Implementation Policy or SIP). The SIP became effective on 28 April 2000, with respect to the priority pollutant criteria promulgated for California by the U.S. EPA through the NTR and to the priority pollutant objectives established by the Central Valley Water Board in the Basin Plan. The SIP became effective on 18 May 2000, with respect to the priority pollutant criteria promulgated by the U.S. EPA through the CTR. The State Water Board adopted amendments to the SIP on 24 February 2005, that became effective on 13 July 2005. The SIP establishes implementation provisions for priority pollutant criteria and objectives and provisions for chronic toxicity control. Requirements of this Order implement the SIP.

4. **Antidegradation Policy.** Federal regulation 40 CFR section 131.12 requires that the state water quality standards include an antidegradation policy consistent with the federal policy. The State Water Board established California's antidegradation policy in State Water Board Resolution 68-16. Resolution 68-16 is deemed to incorporate the federal antidegradation policy where the federal policy applies under federal law. Resolution 68-16 requires that existing water quality be maintained unless degradation is justified based on specific findings. The Central Valley Water Board's Basin Plan implements, and incorporates by reference, both the State and federal antidegradation policies. The permitted discharge must be consistent with the antidegradation provision of 40 CFR section 131.12 and State Water Board Resolution 68-16.

5. **Anti-Backsliding Requirements.** Sections 402(o) and 303(d)(4) of the CWA and federal regulations at 40 CFR section 122.44(l) restrict backsliding in NPDES permits. These anti-backsliding provisions require that effluent limitations in a reissued permit must be as stringent as those in the previous permit, with some exceptions in which limitations may be relaxed.

6. **Human Right to Water Act.** In compliance with Water Code section 106.3, it is the policy of the State of California that every human being has the right to safe, clean, affordable, and accessible water adequate for human consumption, cooking, and sanitary purposes. This Order promotes that policy by requiring discharges to meet maximum contaminant levels designed to protect human health and ensure that water is safe for domestic use.

7. **Endangered Species Act Requirements.** This Order does not authorize any act that results in the taking of a threatened or endangered species or any act that is now prohibited, or becomes prohibited in the future, under either the California Endangered Species Act (Fish and Game Code, §§ 2050 to 2097) or the Federal Endangered Species Act (16 U.S.C.A. §§ 1531 to 1544). This Order requires compliance with effluent limits, receiving water limits, and other requirements to protect the beneficial uses of waters of the state The Discharger is responsible for meeting all requirements of the applicable Endangered Species Act.

8. **Emergency Planning and Community Right to Know Act.** Section 13263.6(a) of the Water Code, requires that *"the Regional Water Board shall prescribe effluent limitations*

as part of the waste discharge requirements of a POTW for all substances that the most recent toxic chemical release data reported to the state emergency response commission pursuant to Section 313 of the Emergency Planning and Community Right to Know Act of 1986 (42 U.S.C. Sec. 11023) (EPCRA) indicate as discharged into the POTW, for which the State Water Board or the Regional Water Board has established numeric water quality objectives, and has determined that the discharge is or may be discharged at a level which will cause, have the reasonable potential to cause, or contribute to, an excursion above any numeric water quality objective".

The most recent toxic chemical data report does not indicate any reportable off-site releases or discharges to the collection system for this Facility. Therefore, a reasonable potential analysis based on information from EPCRA cannot be conducted. Based on information from EPCRA, there is no reasonable potential to cause or contribute to an excursion above any numeric water quality objectives included within the Basin Plan or in any State Water Board plan, so no effluent limitations are included in this permit pursuant to Water Code section 13263.6(a).

However, as detailed elsewhere in this Order, available effluent data indicate that there are constituents present in the effluent that have a reasonable potential to cause or contribute to exceedances of water quality standards and require inclusion of effluent limitations based on federal and state laws and regulations.

9. **Storm Water Requirements.** USEPA promulgated federal regulations for storm water on 16 November 1990 in 40 CFR Parts 122, 123, and 124. The NPDES Industrial Storm Water Program regulates storm water discharges from wastewater treatment facilities. Wastewater treatment plants are applicable industries under the storm water program and are obligated to comply with the federal regulations. The State Water Board does not require wastewater treatment facilities with design flows less than 1 MGD to obtain coverage under the Industrial Storm Water General Order. Additionally, as discussed further in section II.A, the Discharger was enrolled for coverage under General Order 2013-0001-DWQ as of 19 July 2013, which regulates storm water discharges from the Discharger's MS4. Therefore, this Order does not regulate storm water discharges from the Facility.

D. Impaired Water Bodies on CWA 303(d) List

1. Under section 303(d) of the 1972 CWA, states, territories and authorized tribes are required to develop lists of water quality limited segments. The waters on these lists do not meet water quality standards, even after point sources of pollution have installed the minimum required levels of pollution control technology. On 11 October 2011 USEPA gave final approval to California's 2008-2010 section 303(d) List of Water Quality Limited Segments (WQLSs). The Basin Plan references this list of WQLSs, which are defined as "…*those sections of lakes, streams, rivers or other fresh water bodies where water quality does not meet (or is not expected to meet) water quality standards even after the application of appropriate limitations for point sources* (40 CFR Part 130, et seq.)." The Basin Plan also states, "*Additional treatment beyond minimum federal standards will be imposed on dischargers to [WQLSs]. Dischargers will be assigned or allocated a maximum allowable load of critical pollutants so that water quality objectives can be met in the segment*."

   The Southern Delta, which includes Deuel Drain, is listed in the 303(d) list and includes: chlorpyrifos, DDT, diazinon, electrical conductivity, group A pesticides, invasive species, mercury, and unknown toxicity.

2. **Total Maximum Daily Loads (TMDLs).** USEPA requires the Central Valley Water Board to develop TMDLs for each 303(d) listed pollutant and water body combination. Table F-6, below, identifies the 303(d) listings and the status of each TMDL.

Table F-6. 303 (d) List for the Southern Delta

Pollutant	Potential Sources	Proposed TMDL Completion
Chlorpyrifos	Agriculture; urban runoff/storm sewers	Adopted 2007
DDT	Agriculture	2021
Diazinon	Agriculture; urban runoff/storm sewers	Adopted 2007
Electrical Conductivity	Agriculture	2019
Group A Pesticides	Agriculture	Adopted 2011
Invasive Species	Source Unknown	2019
Mercury	Resource Extraction	Adopted 2009
Unknown Toxicity	Source Unknown	2019

3. The 303(d) listings and TMDLs have been considered in the development of the Order. A pollutant-by-pollutant evaluation of each pollutant of concern is described in **section** IV.C.3 of this Fact Sheet.

E. Other Plans, Polices and Regulations

1. **Drinking Water Policy.** On 26 July 2013, the Central Valley Water Board adopted Resolution No. R5 2013 0098 amending the Basin Plan and establishing a Drinking Water Policy for surface waters of the Sacramento-San Joaquin Delta (Delta) and upstream tributaries below the first major dams. The project area is bounded by Shasta Dam on the Sacramento River, Millerton Dam on the San Joaquin River, and Folsom Dam on the American River. The Drinking Water Policy was adopted to protect the municipal and domestic supply (MUN) beneficial use and pertains to the following drinking water constituents of concern: organic carbon, Cryptosporidium, Giardia, salt and nutrients. The Policy includes a narrative water quality objective and implementation provisions for Cryptosporidium and Giardia to specifically protect the public water system component of the MUN beneficial use. Approval of the Policy by the State Water Board, USEPA, and the Office of Administrative Law is expected by 2014.

2. **Title 27.** The discharge authorized herein and the treatment and storage facilities associated with the discharge of treated municipal wastewater, except for discharges of residual sludge and solid waste, are exempt from the requirements of Title 27, California Code of Regulations (CCR), section 20005 et seq (hereafter Title 27). The exemption, pursuant to Title 27 CCR section 20090(a), is based on the following:

   a. The waste consists primarily of domestic sewage and treated effluent;

   b. The waste discharge requirements are consistent with water quality objectives; and

c. The treatment and storage facilities described herein are associated with a municipal wastewater treatment plant.

IV. RATIONALE FOR EFFLUENT LIMITATIONS AND DISCHARGE SPECIFICATIONS

Effluent limitations and toxic and pretreatment effluent standards established pursuant to sections 301 (Effluent Limitations), 302 (Water Quality Related Effluent Limitations), 304 (Information and Guidelines), and 307 (Toxic and Pretreatment Effluent Standards) of the CWA and amendments thereto are applicable to the discharge.

The CWA mandates the implementation of effluent limitations that are as stringent as necessary to meet water quality standards established pursuant to state or federal law [33 U.S.C., §1311(b)(1)(C); 40 CFR 122.44(d)(1)]. NPDES permits must incorporate discharge limits necessary to ensure that water quality standards are met. This requirement applies to narrative criteria as well as to criteria specifying maximum amounts of particular pollutants. Pursuant to federal regulations, 40 CFR 122.44(d)(1)(i), NPDES permits must contain limits that control all pollutants that "*are or may be discharged at a level which will cause, have the reasonable potential to cause, or contribute to an excursion above any state water quality standard, including state narrative criteria for water quality*." Federal regulations, 40 CFR 122.44(d)(1)(vi), further provide that "[w]*here a state has not established a water quality criterion for a specific chemical pollutant that is present in an effluent at a concentration that causes, has the reasonable potential to cause, or contributes to an excursion above a narrative criterion within an applicable State water quality standard, the permitting authority must establish effluent limits*."

The CWA requires point source dischargers to control the amount of conventional, non-conventional, and toxic pollutants that are discharged into the waters of the United States. The control of pollutants discharged is established through effluent limitations and other requirements in NPDES permits. There are two principal bases for effluent limitations in the Code of Federal Regulations: 40 CFR 122.44(a) requires that permits include applicable technology-based limitations and standards; and 40 CFR 122.44(d) requires that permits include WQBELs to attain and maintain applicable numeric and narrative water quality criteria to protect the beneficial uses of the receiving water where numeric water quality objectives have not been established. The Basin Plan at page IV-17.00, contains an implementation policy, "Policy for Application of Water Quality Objectives" that specifies that the Central Valley Water Board "*will, on a case-by-case basis, adopt numerical limitations in orders which will implement the narrative objectives*." This Policy complies with 40 CFR 122.44(d)(1). With respect to narrative objectives, the Central Valley Water Board must establish effluent limitations using one or more of three specified sources, including: (1) USEPA's published water quality criteria, (2) a proposed state criterion (i.e., water quality objective) or an explicit state policy interpreting its narrative water quality criteria (i.e., the Central Valley Water Board's "Policy for Application of Water Quality Objectives")(40 CFR 122.44(d)(1)(vi)(A), (B) or (C)), or (3) an indicator parameter.

The Basin Plan includes numeric site-specific water quality objectives and narrative objectives for toxicity, chemical constituents, discoloration, radionuclides, and tastes and odors. The narrative toxicity objective states: "*All waters shall be maintained free of toxic substances in concentrations that produce detrimental physiological responses in human, plant, animal, or aquatic life*." (Basin Plan at III-8.00) The Basin Plan states that material and relevant information, including numeric criteria, and recommendations from other agencies and scientific literature will be utilized in evaluating compliance with the narrative toxicity objective. The narrative chemical constituents objective states that waters shall not contain chemical constituents in concentrations that adversely affect beneficial uses. At minimum, "…*water designated for use as domestic or municipal supply (MUN) shall not contain concentrations of chemical constituents in excess of the maximum contaminant levels (MCLs)*" in Title 22 of CCR. The Basin Plan further states that, to protect all beneficial uses, the Central Valley Water Board may apply limits more stringent than

MCLs. The narrative tastes and odors objective states: "*Water shall not contain taste- or odor-producing substances in concentrations that impart undesirable tastes or odors to domestic or municipal water supplies or to fish flesh or other edible products of aquatic origin, or that cause nuisance, or otherwise adversely affect beneficial uses*."

A. Discharge Prohibitions

1. **Prohibition III.A (No discharge or application of waste other than that described in this Order).** This prohibition is based on Water Code section 13260 that requires filing of a ROWD before discharges can occur. The Discharger submitted a ROWD for the discharges described in this Order; therefore, discharges not described in this Order are prohibited.

2. **Prohibition III.B (No bypasses or overflow of untreated wastewater, except under the conditions at CFR Part 122.41(m)(4)).** As stated in section I.G of Attachment D, Standard Provisions, this Order prohibits bypass from any portion of the treatment facility. Federal regulations, 40 CFR 122.41(m), define "bypass" as the intentional diversion of waste streams from any portion of a treatment facility. This section of the federal regulations, 40 CFR 122.41(m)(4), prohibits bypass unless it is unavoidable to prevent loss of life, personal injury, or severe property damage. In considering the Regional Water Board's prohibition of bypasses, the State Water Board adopted a precedential decision, Order No. WQO 2002-0015, which cites the federal regulations, 40 CFR 122.41(m), as allowing bypass only for essential maintenance to assure efficient operation.

3. **Prohibition III.C (No controllable condition shall create a nuisance).** This prohibition is based on Water Code section 13050 that requires water quality objectives established for the prevention of nuisance within a specific area. The Basin Plan prohibits conditions that create a nuisance.

4. **Prohibition III.D (No inclusion of pollutant free wastewater shall cause improper operation of the Facility's systems).** This prohibition is based on CFR Part 122.41 et seq. that requires the proper design and operation of treatment facilities.

B. Technology-Based Effluent Limitations

1. Scope and Authority

Section 301(b) of the CWA and implementing U.S. EPA permit regulations at 40 CFR section 122.44 require that permits include conditions meeting applicable technology-based requirements at a minimum, and any more stringent effluent limitations necessary to meet applicable water quality standards. The discharge authorized by this Order must meet minimum federal technology-based requirements based on Secondary Treatment Standards at 40 CFR part 133.

Regulations promulgated in 40 CFR section 125.3(a)(1) require technology-based effluent limitations for municipal Dischargers to be placed in NPDES permits based on Secondary Treatment Standards or Equivalent to Secondary Treatment Standards.

The Federal Water Pollution Control Act Amendments of 1972 (PL 92-500) established the minimum performance requirements for POTWs [defined in section 304(d)(1)]. Section 301(b)(1)(B) of that Act requires that such treatment works must, as a minimum, meet effluent limitations based on secondary treatment as defined by the U.S. EPA Administrator.

Based on this statutory requirement, U.S. EPA developed secondary treatment regulations, which are specified in 40 CFR part 133. These technology-based regulations

apply to all municipal wastewater treatment plants and identify the minimum level of effluent quality attainable by secondary treatment in terms of BOD_5, TSS, and pH.

2. Applicable Technology-Based Effluent Limitations

a. **BOD_5 and TSS.** Federal regulations, 40 CFR Part 133, establish the minimum weekly and monthly average level of effluent quality attainable by secondary treatment for BOD_5 and TSS. This Order establishes WQBELs that are equal to or more stringent than the secondary technology-based treatment described in 40 CFR Part 133 and are necessary to protect the beneficial uses of the receiving stream. (See section IV.C.3.c.vii of this Fact Sheet for the discussion on WQBELs for pathogens). In addition, 40 CFR 133.102, in describing the minimum level of effluent quality attainable by secondary treatment, states that the 30-day average percent removal shall not be less than 85 percent. This Order contains a limitation requiring an average of 85 percent removal of BOD_5 and TSS over each calendar month.

b. **Flow.** The Facility was designed to provide a tertiary level of treatment for up to a design flow of 0.70 MGD. When the new wastewater treatment plant was completed, the design average dry weather flow capacity of the plant increased from 0.62 MGD up to 0.70 MGD. However, after the Discharger has concluded that they can maintain their current flow capacity of 0.62 MGD and have not requested an increase in the permitted discharge flow. Therefore, this Order contains an average dry weather discharge flow effluent limitation of 0.62 MGD.

c. **pH.** The secondary treatment regulations at 40 CFR Part 133 also require that pH be maintained between 6.0 and 9.0 standard units.

Summary of Technology-based Effluent Limitations
Discharge Point 001

Table F-7. Summary of Technology-based Effluent Limitations

Parameter	Units	Effluent Limitations				
		Average Monthly	Average Weekly	Maximum Daily	Instantaneous Minimum	Instantaneous Maximum
Average Dry Weather Flow	MGD	0.62[1]	--	--	--	--
Conventional Pollutants						
Biochemical Oxygen Demand (5-day @ 20ºC)[3]	mg/L	30	45	--	--	--
	lbs/day[2]	155	232	--	--	--
	% Removal	85	--	--	--	--
pH[2]	standard units	--	--	--	6.5	8.5
Total Suspended Solids[3]	mg/L	30	45	--	--	--
	lbs/day[2]	155	232	--	--	--
	% Removal	85	--	--	--	--

[1] The average dry weather flow shall not exceed 0.62 MGD.
[2] Based on a design average dry weather flow capacity of 0.62 MGD.
[2] More stringent WQBELs are applicable to the discharge and are included in this Order, as described further in section IV.C.3 of this Fact Sheet.

C. Water Quality-Based Effluent Limitations (WQBELs)

1. Scope and Authority

CWA Section 301(b) and 40 CFR section 122.44(d) require that permits include limitations more stringent than applicable federal technology-based requirements where necessary to achieve applicable water quality standards. This Order contains requirements, expressed as a technology equivalence requirement, more stringent than secondary treatment requirements that are necessary to meet applicable water quality standards. The rationale for these requirements, which consists of tertiary treatment is discussed in section IV.C.3 of the Fact Sheet.

Section 122.44(d)(1)(i) of 40 CFR requires that permits include effluent limitations for all pollutants that are or may be discharged at levels that have the reasonable potential to cause or contribute to an exceedance of a water quality standard, including numeric and narrative objectives within a standard. Where reasonable potential has been established for a pollutant, but there is no numeric criterion or objective for the pollutant, WQBELs must be established using: (1) U.S. EPA criteria guidance under CWA section 304(a), supplemented where necessary by other relevant information; (2) an indicator parameter for the pollutant of concern; or (3) a calculated numeric water quality criterion, such as a proposed state criterion or policy interpreting the state's narrative criterion, supplemented with other relevant information, as provided in section 122.44(d)(1)(vi).

The process for determining reasonable potential and calculating WQBELs when necessary is intended to protect the designated uses of the receiving water as specified in the Basin Plan, and achieve applicable water quality objectives and criteria that are contained in other state plans and policies, or any applicable water quality criteria contained in the CTR and NTR.

2. Applicable Beneficial Uses and Water Quality Criteria and Objectives

The Basin Plan designates beneficial uses, establishes water quality objectives, and contains implementation programs and policies to achieve those objectives for all waters addressed through the plan. In addition, the Basin Plan implements State Water Board Resolution No. 88-63, which established state policy that all waters, with certain exceptions, should be considered suitable or potentially suitable for municipal or domestic supply.

The Basin Plan on page II-1.00 states: "*Protection and enhancement of existing and potential beneficial uses are primary goals of water quality planning…*" and with respect to disposal of wastewaters states that "*...disposal of wastewaters is [not] a prohibited use of waters of the State; it is merely a use which cannot be satisfied to the detriment of beneficial uses.*"

The federal CWA section 101(a)(2), states: "*it is the national goal that wherever attainable, an interim goal of water quality which provides for the protection and propagation of fish, shellfish, and wildlife, and for recreation in and on the water be achieved by July 1, 1983*." Federal Regulations, developed to implement the requirements of the CWA, create a rebuttable presumption that all waters be designated as fishable and swimmable. Federal Regulations, 40 CFR sections 131.2 and 131.10, require that all waters of the State regulated to protect the beneficial uses of public water supply, protection and propagation of fish, shell fish and wildlife, recreation in and on the water, agricultural, industrial and other purposes including navigation. Section 131.3(e), 40 CFR, defines existing beneficial uses as those uses actually attained after 28 November 1975, whether or not they are included in the water quality standards. Federal Regulation, 40 CFR section 131.10 requires that uses be obtained by

implementing effluent limitations, requires that all downstream uses be protected and states that in no case shall a state adopt waste transport or waste assimilation as a beneficial use for any waters of the United States.

a. **Receiving Water and Beneficial Uses.** Refer to III.C.1, above, for a complete description of the receiving water and beneficial uses.

b. **Effluent and Ambient Background Data.** The Discharger began discharging tertiary treated wastewater from the new wastewater treatment plant on 22 September 2010 and was granted a 90-day grace period from mandatory minimum penalties pursuant to California Water Code 13385(j)(1)(D)(i), which ended on 22 December 2010. Thus, effluent monitoring data collected prior to 22 December 2010 is not representative of effluent quality from the new Facility and the RPA was based on effluent data collected during periods of discharge to Deuel Drain between 22 December 2010 through 30 April 2013. The RPA is based on receiving water data collected between 13 December 2008 and 30 April 2013.

c. **Assimilative Capacity/Mixing Zone.** Consistent with Order R5-2008-0164, this Order does not designate dilution credits or a mixing zone and discharge limitations must be met at the point of discharge.

Conversion Factors. The CTR contains aquatic life criteria for arsenic, cadmium, chromium III, chromium VI, copper, lead, nickel, silver, and zinc which are presented in dissolved concentrations. USEPA recommends conversion factors to translate dissolved concentrations to total concentrations. The default USEPA conversion factors contained in Appendix 3 of the SIP were used to convert the applicable dissolved criteria to total recoverable criteria.

d. **Hardness-Dependent CTR Metals Criteria.** The California Toxics Rule and the National Toxics Rule contain water quality criteria for seven metals that vary as a function of hardness. The lower the hardness the lower the water quality criteria. The metals with hardness-dependent criteria include cadmium, copper, chromium III, lead, nickel, silver, and zinc.

This Order has established the criteria for hardness-dependent metals based on the reasonable worst-case ambient hardness as required by the SIP[1], the CTR[2] and State Water Board Order No. WQO 2008-0008 (City of Davis). The SIP and the CTR require the use of “receiving water” or “actual ambient” hardness, respectively, to determine effluent limitations for these metals. (SIP, § 1.2; 40 CFR § 131.38(c)(4)) The CTR does not define whether the term “ambient,” as applied in the regulations, necessarily requires the consideration of upstream as opposed to downstream hardness conditions. Therefore, where reliable, representative data are available, the hardness value for calculating criteria can be the downstream receiving water hardness, after mixing with the effluent (Order WQO 2008-0008, p. 11). The Central Valley Water Board thus has considerable discretion in determining ambient hardness (*Id.*, p.10).

[1] The SIP does not address how to determine the hardness for application to the equations for the protection of aquatic life when using hardness-dependent metals criteria. It simply states, in Section 1.2, that the criteria shall be properly adjusted for hardness using the hardness of the receiving water.

[2] The CTR requires that, for waters with a hardness of 400 mg/L (as $CaCO_3$), or less, the actual ambient hardness of the surface water must be used. It further requires that the hardness values used must be consistent with the design discharge conditions for design flows and mixing zones.

As discussed below, scientific literature provides a reliable method for calculating protective hardness-dependent CTR criteria, considering all discharge conditions. This methodology produces hardness-dependent CTR criteria based on the reasonable worst-case downstream ambient hardness that ensure these metals do not cause receiving water toxicity under any downstream receiving water condition. Under this methodology, the Central Valley Water Board considers all hardness conditions that could occur in the ambient downstream receiving water after the effluent has mixed with the water body[1]. This ensures that effluent limitations are fully protective of aquatic life in all areas of the receiving water affected by the discharge under all flow conditions, at the fully mixed location, and throughout the water body including at the point of discharge into the water body.

i. **Conducting the Reasonable Potential Analysis (RPA).** The SIP in Section 1.3 states, "*The RWQCB shall…determine whether a discharge may: (1) cause, (2) have a reasonable potential to cause, or (3) contribute to an excursion above any applicable priority pollutant criterion or objective*." Section 1.3 provides a step-by-step procedure for conducting the RPA. The procedure requires the comparison of the maximum effluent concentration (MEC) and maximum ambient background concentration to the applicable criterion that has been properly adjusted for hardness. Unless otherwise noted, for the hardness-dependent CTR metals criteria the following procedures were followed for properly adjusting the criterion for hardness when conducting the RPA.

(a) The SIP requires WQBELs if the MEC is equal to or exceeds the applicable criterion, adjusted for hardness. For comparing the MEC to the applicable criterion, the "fully mixed" reasonable worst-case downstream ambient hardness was used to adjust the criterion. In this evaluation the portion of the receiving water affected by the discharge is analyzed. For hardness-dependent criteria, the hardness of the effluent has an impact on the determination of the applicable criterion in areas of the receiving water affected by the discharge. Therefore, for comparing the MEC to the applicable criterion, the reasonable worst-case downstream ambient hardness was used to adjust the criterion. For this situation it is necessary to consider the hardness of the effluent in determining the applicable hardness to adjust the criterion. The procedures for determining the applicable criterion after proper adjustment using the reasonable worst-case downstream ambient hardness is outlined in subsection ii, below.

(b) The SIP requires WQBELs if the receiving water is impaired upstream (outside the influence) of the discharge, i.e., if the maximum ambient background concentration of a pollutant exceeds the applicable criterion, adjusted for hardness[2]. For comparing the maximum ambient background concentration to the applicable criterion, the reasonable worst-case upstream ambient hardness was used to adjust the criteria. This is appropriate, because this area is outside the influence of the discharge. Since the discharge does not impact the upstream hardness, the effect of the effluent hardness was not included in this evaluation.

[1] All effluent discharges will change the ambient downstream metals concentration and hardness. It is not possible to change the metals concentration without also changing the hardness.
[2] The pollutant must also be detected in the effluent.

ii. **Calculating Water Quality-Based Effluent Limitations.** The remaining discussion in this section relates to the development of WQBELs when it has been determined that the discharge has reasonable potential to cause or contribute to an exceedance of the CTR hardness-dependent metals criteria in the receiving water.

A 2006 Study[1] developed procedures for calculating the effluent concentration allowance (ECA)[2] for CTR hardness-dependent metals. The 2006 Study demonstrated that it is necessary to evaluate all discharge conditions (e.g. high and low flow conditions) and the hardness and metals concentrations of the effluent and receiving water when determining the appropriate ECA for these hardness-dependent metals. This method is superior to relying on downstream receiving water samples alone because it captures all possible mixed conditions in the receiving water. Both receiving water and effluent hardness vary based on flow and other factors, but the variability of receiving water and effluent hardness is sometimes independent. Using a calculated hardness value ensures that the Central Valley Water Board considers all possible mixed downstream values that may result from these two independent variables. Relying on receiving water sampling alone is less likely to capture all possible mixed downstream conditions.

The equation describing the total recoverable regulatory criterion, as established in the CTR[3], is as follows:

$$\text{CTR Criterion} = \text{WER} \times (e^{m[\ln(H)]+b}) \qquad \text{(Equation 1)}$$

Where:

H = hardness (as $CaCO_3$)[4]
WER = water-effect ratio
m, b = metal- and criterion-specific constants

In accordance with the CTR, the default value for the WER is 1. A WER study must be conducted to use a value other than 1. The constants “m” and “b” are specific to both the metal under consideration, and the type of total recoverable criterion (i.e., acute or chronic). The metal-specific values for these constants are provided in the CTR at paragraph (b)(2), Table 1.

The equation for the ECA is defined in Section 1.4, Step 2, of the SIP and is as follows:

[1] Emerick, R.W.; Borroum, Y.; & Pedri, J.E., 2006. California and National Toxics Rule Implementation and Development of Protective Hardness Based Metal Effluent Limitations. WEFTEC, Chicago, Ill.
[2] The ECA is defined in Appendix 1 of the SIP (page Appendix 1-2). The ECA is used to calculate WQBELs in accordance with Section 1.4 of the SIP.
[3] 40 CFR § 131.38(b)(2).
[4] For this discussion, all hardness values are in mg/L as $CaCO_3$.

$$ECA = C \quad (\text{when } C \leq B)^{1} \qquad \text{(Equation 2)}$$

Where:

C = the priority pollutant criterion/objective, adjusted for hardness (see Equation 1, above)

B = the ambient background concentration

The 2006 Study demonstrated that the relationship between hardness and the calculated criteria is the same for some metals, so the same procedure for calculating the ECA may be used for these metals. The same procedure can be used for chronic cadmium, chromium III, copper, nickel, and zinc. These metals are hereinafter referred to as "Concave Down Metals". "Concave Down" refers to the shape of the curve represented by the relationship between hardness and the CTR criteria in Equation 1. Another similar procedure can be used for determining the ECA for acute cadmium, lead, and acute silver, which are referred to hereafter as "Concave Up Metals".

ECA for Chronic Cadmium, Chromium III, Copper, Nickel, and Zinc – For Concave Down Metals (i.e., chronic cadmium, chromium III, copper, nickel, and zinc) the 2006 Study demonstrates that when the effluent is in compliance with the CTR criteria and the upstream receiving water is in compliance with the CTR criteria, any mixture of the effluent and receiving water will always be in compliance with the CTR criteria[2]. The 2006 Study proves that regardless of whether the effluent hardness is lower or greater than the upstream hardness, the reasonable worst-case flow condition is the effluent dominated condition (i.e., no receiving water flow)[3]. Consequently, for Concave Down Metals, the CTR criteria have been calculated using the downstream ambient hardness under this condition.

The effluent hardness for Discharge Point 001 ranged from 564 mg/L to 590 mg/L, based on five samples from 22 December 2010 to 30 April 2013. The upstream receiving water hardness varied from 116 mg/L to 1,290 mg/L, based on five samples from13 December 2008 to30 April 2013, and the downstream receiving water hardness was 384 mg/L based on one measurement in January 2012. Under the effluent dominated condition, the reasonable worst-case downstream ambient hardness is 564 mg/L. 40 CFR section 131.38(c)(4) states, "*For waters with a hardness of over 400 mg/L as calcium carbonate, a hardness of 400 mg/L as calcium carbonate shall be used*…" The lowest effluent hardness is 564 mg/L, which is above 400 mg/L. Therefore, a hardness of 400 mg/L was used to represent the minimum effluent hardness for the remainder of this discussion.

[1] The 2006 Study assumes the ambient background metals concentration is equal to the CTR criterion (i.e., C ≤ B)
[2] 2006 Study, p. 5700
[3] There are two typographical errors in the 2006 Study in the discussion of Concave Down Metals when the effluent hardness is less than the receiving water hardness. The effluent and receiving water hardness were transposed in the discussion, but the correct hardness values were used in the calculations. The typographical errors were confirmed by the author of the 2006 Study, by email dated 1 April 2011, from Dr. Robert Emerick to Mr. James Marshall, Central Valley Water Board.

As demonstrated in the example shown in Table F-8, below, using this hardness to calculate the ECA for all Concave Down Metals will result in WQBELs that are protective under all flow conditions, from the effluent dominated condition to high flow condition. This example for zinc assumes the following conservative conditions for the upstream receiving water:

- Upstream receiving water always at the lowest observed upstream receiving water hardness (i.e., 116 mg/L)
- Upstream receiving water zinc concentration always at the CTR criteria (i.e., no assimilative capacity).

Using these reasonable worst-case receiving water conditions, a simple mass balance (as shown in Equation 3, below) accounts for all possible mixtures of effluent and receiving water under all flow conditions.

$$C_{MIX} = C_{RW} \times (1-EF) + C_{Eff} \times (EF) \qquad \text{(Equation 3)}$$

Where:

C_{MIX} = Mixed concentration (e.g. metals or hardness)
C_{RW} = Upstream receiving water concentration
C_{Eff} = Effluent concentration
EF = Effluent Fraction

In this example, for zinc, for any receiving water flow condition (high flow to low flow), the fully-mixed downstream ambient zinc concentration is in compliance with the CTR criteria[1].

[1] This method considers the actual lowest observed upstream hardness and actual lowest observed effluent hardness to determine the reasonable worst-case ambient downstream hardness under all possible receiving water flow conditions. Table F-8 demonstrates that the receiving water is always in compliance with the CTR criteria at the fully-mixed location in the receiving water. It also demonstrates that the receiving water is in compliance with the CTR criteria for all mixtures from the point of discharge to the fully-mixed location. Therefore, a mixing zone is not used for compliance.

Table F-8. Zinc ECA Evaluation

Lowest Observed Effluent Hardness					**400 mg/L (as $CaCO_3$)[1]**
Lowest Observed Upstream Receiving Water Hardness					**116 mg/L (as $CaCO_3$)**
Highest Assumed Upstream Receiving Water Zinc Concentration					**136 µg/L[2]**
Zinc $ECA_{chronic}$[3]					**388 µg/L**
Effluent Fraction[7]		**Fully Mixed Downstream Ambient Concentration**			
		Hardness[4] (mg/L)	**CTR Criteria[5] (µg/L)**	**Zinc[6] (µg/L)**	**Complies with CTR Criteria**
High Flow	1%	119	139	138	**Yes**
	5%	130	150	149	**Yes**
	15%	159	177	174	**Yes**
	25%	187	204	199	**Yes**
	50%	258	268	262	**Yes**
Low Flow	75%	329	329	325	**Yes**
	100%	400	388	388	**Yes**

1 Assumed minimum hardness value per 40 CFR 131.38(c)(4).
2 Highest assumed upstream receiving water zinc concentration calculated using Equation 1 for chronic criterion at a hardness of 116 mg/L.
3 ECA calculated using Equation 1 for chronic criterion at a hardness of 400 mg/L.
4 Fully mixed downstream ambient hardness is the mixture of the receiving water and effluent hardness at the applicable effluent fraction using Equation 3.
5 Fully mixed downstream ambient criteria are the chronic criteria calculated using Equation 1 at the mixed hardness.
6 Fully mixed downstream ambient zinc concentration is the mixture of the receiving water and effluent zinc concentrations at the applicable effluent fraction using Equation 3.
7 The effluent fraction ranges from 1% at the high receiving water flow condition, to 100% at the lowest receiving water flow condition (i.e., effluent dominated).

The receiving water at times contains concentrations of copper that exceed water quality criteria associated with the hardness condition previous to the discharge. The 2006 Study procedures remain applicable under these conditions. The discharge cannot cause or contribute to a violation of water quality criteria/objectives in the receiving water. Although metals concentrations downstream of the discharge exceed CTR criteria, the cause of the exceedance is not due to the discharge, it is due to the elevated metals concentrations upstream of the discharge. Implementing the procedures of the 2006 study does not result in an increase in toxicity downstream of the discharge, and in fact reduces the amount of toxicity already present in the receiving water. This is demonstrated in the example below for copper (see Table F-9).

As shown in Table F-9 for copper, prior to the discharge the copper has been observed to exceed water quality criteria by up to 51%. When the receiving water contains some fraction of effluent, the percent exceedance is reduced. The greater the amount of effluent in the receiving water, the lower the percent exceedance, until a fully compliant state is achieved when the effluent constitutes the entire flow. The effluent limitation associated with copper, therefore, is sufficient to assure that the discharge never causes or contributes to a violation of a water quality criterion, and in fact reduces the amount of toxicity already present in the receiving water.

Table F-9. Copper ECA Evaluation

Lowest Observed Effluent Hardness					**400 mg/L (as $CaCO_3$)[1]**
Lowest Observed Upstream Receiving Water Hardness					**116 mg/L (as $CaCO_3$)**
Highest Observed Upstream Receiving Water Copper Concentration					**16 µg/L**
Copper $ECA_{chronic}$[2]					**30 µg/L**
Effluent Fraction[6]		**Fully Mixed Downstream Ambient Concentration**			
		Hardness[3] (mg/L)	**CTR Criteria[4] (µg/L)**	**Copper[5] (µg/L)**	**Percent Exceeding Criterion**
High Flow	0%	116	11	16	51%
	1%	119	11	16	49%
	5%	130	12	17	43%
	15%	159	14	18	31%
	25%	187	16	20	23%
	50%	258	21	23	11%
Low Flow	75%	329	26	27	4%
	100%	400	30	30	0%

1 Assumed minimum hardness value per 40 CFR 131.38(c)(4).
2 ECA calculated using Equation 1 for chronic criterion at a hardness of 400 mg/L.
3 Fully mixed downstream ambient hardness is the mixture of the receiving water and effluent hardness at the applicable effluent fraction using Equation 3.
4 Fully mixed downstream ambient criteria are the chronic criteria calculated using Equation 1 at the mixed hardness.
5 Fully mixed downstream ambient copper concentration is the mixture of the receiving water and effluent copper concentrations at the applicable effluent fraction using Equation 3.
6 The effluent fraction ranges from 0% at the high receiving water flow condition, to 100% at the lowest receiving water flow condition (i.e., effluent dominated).

ECA for Acute Cadmium, Lead, and Acute Silver – For Concave Up Metals (i.e., acute cadmium, lead, and acute silver), the relationship between hardness and the metals criteria is different than for Concave Down Metals. The 2006 Study demonstrates that for Concave Up Metals, the effluent and upstream receiving water can be in compliance with the CTR criteria, but the resulting mixture may contain metals concentrations that exceed the CTR criteria and could cause toxicity. For these metals, the 2006 Study provides a mathematical approach to calculate the ECA that is protective of aquatic life, in all areas of the receiving water affected by the discharge, under all discharge and receiving water flow conditions (see Equation 4, below).

The ECA, as calculated using Equation 4, is based on the reasonable worst-case upstream receiving water hardness, the lowest observed effluent hardness, and assuming no receiving water assimilative capacity for metals (i.e., ambient background metals concentrations are at their respective CTR criterion). Equation 4 is not used in place of the CTR equation (Equation 1). Rather, Equation 4, which is derived using the CTR equation, is used as a direct approach for calculating the ECA. This replaces an iterative approach for calculating the ECA. The CTR equation has been used to evaluate the receiving water downstream of the discharge at all discharge and flow conditions to ensure the ECA is protective (e.g., see Table F-10).

$$ECA = \left(\frac{m(H_e - H_{rw})\left(e^{m\{ln(H_{rw})\}+b}\right)}{H_{rw}} \right) + e^{m\{ln(H_{rw})\}+b} \qquad \text{(Equation 4)}$$

Where:

m, b = criterion specific constants (from CTR)

H_e = lowest observed effluent hardness

H_{rw} = reasonable worst-case upstream receiving water hardness

An example similar to the Concave Down Metals is shown for acute cadmium, a Concave Up Metal, in Table F-10, below. As previously mentioned, the lowest effluent hardness is 564 mg/L, while the upstream receiving water hardness ranged from 116 mg/L to 1,290 mg/L, and the downstream receiving water hardness was 384 mg/L. In this case, the reasonable worst-case upstream receiving water hardness to use in Equation 4 to calculate the ECA is 116 mg/L.

Using the procedures discussed above to calculate the ECA for all Concave Up Metals will result in WQBELs that are protective under all potential effluent/receiving water flow conditions (high flow to low flow) and under all known hardness conditions, as demonstrated in Table F-10, for acute cadmium.

Table F-10. Cadmium ECA Evaluation

Lowest Observed Effluent Hardness					**400 mg/L[1]**
Reasonable Worst-case Upstream Receiving Water Hardness					**116 mg/L**
Reasonable Worst-case Upstream Receiving Water Cadmium Concentration					**5.3 µg/L[2]**
Cadmium ECA_{acute}[3]					**20 µg/L**
Effluent Fraction[7]		**Fully Mixed Downstream Ambient Concentration**			
		Hardness[4] (mg/L) (as $CaCO_3$)	**CTR Criteria[5] (µg/L)**	**Cadmium[6] (µg/L)**	**Complies with CTR Criteria**
High Flow	1%	119	5.5	0.89	Yes
	5%	130	6.1	1.7	Yes
	15%	159	7.6	3.6	Yes
	25%	187	9.2	5.5	Yes
	50%	258	13	10	Yes
	75%	329	17	15	Yes
Low Flow	100%	400	22	20	Yes

1 Assumed minimum hardness value per 40 CFR section 131.38(c)(4).
2 Reasonable worst-case upstream receiving water cadmium concentration calculated using Equation 1 for acute criterion at a hardness of 400 mg/L.
3 ECA calculated using Equation 4 for acute criteria.
4 Fully mixed downstream ambient hardness is the mixture of the receiving water and effluent hardness at the applicable effluent fraction.
5 Fully mixed downstream ambient criteria are the acute criteria calculated using Equation 1 at the mixed hardness.
6 Fully mixed downstream ambient cadmium concentration is the mixture of the receiving water and effluent cadmium concentrations at the applicable effluent fraction.
7 The effluent fraction ranges from 1% at the high receiving water flow condition, to 100% at the lowest receiving water flow condition (i.e., effluent dominated).

Based on the procedures discussed above, Table F-11 lists all the CTR hardness-dependent metals and the associated ECA used in this Order.

Table F-11. Summary of ECA Evaluations for CTR Hardness-dependent Metals

CTR Metals	ECA (µg/L, total recoverable)[1]	
	acute	chronic
Copper	52	30
Chromium III	5,400	640
Cadmium	20	7.3
Lead	410	16
Nickel	1,500	170
Silver	27	--
Zinc	390	390

[1] Results shown as two significant figures in accordance with CTR.

3. Determining the Need for WQBELs

a. **Constituents with No Reasonable Potential**. WQBELs are not included in this Order for constituents that do not demonstrate reasonable potential (i.e., constituents were not detected in the effluent or receiving water at concentrations exceeding applicable water quality criteria); however, monitoring for those pollutants is established in this Order as required by the SIP. If the results of effluent monitoring demonstrate reasonable potential, this Order may be reopened and modified by adding an appropriate effluent limitation.

Most constituents with no reasonable potential are not discussed in this Order. However, the following constituents were found to have no reasonable potential after assessment of the data:

i. **Aluminum**

Aluminum is the third most abundant element in the earth's crust and is ubiquitous in both soils and aquatic sediments. When mobilized in surface waters, aluminum has been shown to be toxic to various fish species. However, the potential for aluminum toxicity in surface waters is directly related to the chemical form of aluminum present, and the chemical form is highly dependent on water quality characteristics that ultimately determine the mechanism of aluminum toxicity. Surface water characteristics, including pH, temperature, colloidal material, fluoride and sulfate concentrations, and total organic carbon, all influence aluminum speciation and its subsequent bioavailability to aquatic life. Calcium [hardness] concentrations in surface water may also reduce aluminum toxicity by competing with monomeric aluminum (Al^{3+}) binding to negatively charged fish gills.

(a) **WQO**. The Code of Federal Regulations promulgated criteria for priority toxic pollutants for California's surface waters as part of section 131.38 Establishment of Numeric Criteria for Priority Toxic Pollutants for the State of California (California Toxics Rule or CTR), including metals criteria. However, aluminum criteria were not promulgated as part of the CTR. Absent numeric aquatic life criteria for aluminum, WQBEL's in the Central Valley Region's NPDES permits are based on the Basin Plans' narrative toxicity objective. The Basin Plans' *Policy for Application of Water Quality Objectives* requires the Central Valley Water Board to consider, "*on a case-by-case basis, direct evidence of beneficial use impacts, all material and relevant information submitted by the discharger and other interested parties, and relevant numerical criteria and guidelines developed and/or published by other agencies and organizations. In considering such*

criteria, the Board evaluates whether the specific numerical criteria which are available through these sources and through other information supplied to the Board, are relevant and appropriate to the situation at hand and, therefore, should be used in determining compliance with the narrative objective." Relevant information includes, but is not limited to (1) USEPA Ambient Water Quality Criteria (NAWQC) and subsequent Correction, (2) site-specific conditions of Deuel Drain, the receiving water, and (3) site-specific aluminum studies conducted by dischargers within the Central Valley Region. (Basin Plan, p. IV.-17.00; see also, 40 CFR 122.44(d)(vi).)

USEPA NAWQC. USEPA recommended the NAWQC aluminum acute criterion at 750 µg/L based on test waters with a pH of 6.5 to 9.0. USEPA also recommended the NAWQC aluminum chronic criterion at 87 µg/L based upon the following two toxicity tests. All test waters contained hardness at 12 mg/L as $CaCO_3$.

(1) Acute toxicity tests at various aluminum doses were conducted in various acidic waters (pH 6.0 – 6.5) on 159- and 160-day old striped bass. The 159-day old striped bass showed no mortality in waters with pH at 6.5 and aluminum doses at 390 µg/L, and the 160-day old striped bass showed 58% mortality at a dose of 174.4 µg/L in same pH waters. However, the 160-day old striped bass showed 98% mortality at aluminum dose of 87.2 µg/L in waters with pH at 6.0, which is USEPA's basis for the 87 µg/L chronic criterion. The varied results draw into question this study and the applicability of the NAWQC chronic criterion of 87 µg/L.

(2) Chronic toxicity effects on 60-day old brook trout were evaluated in circumneutral pH waters (6.5-6.9 pH) in five cells at various aluminum doses (4, 57, 88, 169, and 350 µg/L). Chronic evaluation started upon hatching of eyed eggs of brook trout, and their weight and length were measure after 45 days and 60 days. The 60-day old brook trout showed 24% weight loss at 169 µg/L of aluminum and 4% weight loss at 88 µg/L of aluminum, which is the basis for USEPA's chronic criteria. Though this test study shows chronic toxic effects 4% reduction in weight after exposure for 60-days, the chronic criterion is based on 4-day exposure; so again, the applicability of the NAWQC chronic criterion of 87 µg/L is questionable.

Site-specific Conditions. Effluent and Deuel Drain monitoring data indicate that the pH and hardness values are not similar to the low pH and hardness conditions under which the chronic criterion for aluminum was developed, as shown in the table below, and therefore, the Central Valley Water Board does not expect aluminum to be as reactive in Deuel Drain as in the previously described toxicity tests. The pH of Deuel Drain, the receiving water, ranged from 6.7 to 8.14 with an average of 7.57 based on 111 monitoring results obtained between 13 December 2008 and 30 April 2013. These water conditions are circumneutral pH where aluminum is predominately in the form of $Al(OH)_3$ and non-toxic to aquatic life. The hardness of Deuel Drain ranged from 116 mg/L to 1,290 mg/L based on five samples, which is above the conditions, and thus less toxic, than the tests used to develop the chronic criterion.

Parameter	Units	Test Conditions for Applicability of Chronic Criterion	Effluent	Receiving Water
pH	standard units	6.0 – 6.5	6.58 – 8.33	6.7 – 8.14
Hardness, Total (as $CaCO_3$)	mg/L	12	564 – 590	116 – 1,290
Aluminum, Total Recoverable	µg/L	87.2 - 390	<19 – 51	1,080 – 1,440

Local Environmental Conditions and Studies. Twenty-one site-specific aluminum toxicity tests have been conducted within the Central Valley Region. The pH and hardness of Deuel Drain are similar, as shown in the table below, and thus the results of these site-specific aluminum toxicity tests are relevant and appropriate for Deuel Drain. As shown in the following table, all EC_{50} toxicity study result values are at concentrations of aluminum above 5,000 µg/L. Thus, the toxic effects of aluminum in surface waters within the Central Valley Region, including Deuel Drain, is less toxic (or less reactive) to aquatic species than demonstrated in the toxicity tests that USEPA used for the basis of establishing the chronic criterion of 87 µg/L. This new information, and review of the toxicity tests USEPA used to establish the chronic criterion, indicates that 87 µg/L is overly stringent and not applicable to Deuel Drain.

Central Valley Region Site-Specific Toxicity Data

Discharger (City)	Species	Test Waters	Hardness Value	Total Aluminum EC_{50} Value	pH	WER
Auburn	*Ceriodaphnia dubia*	Effluent	99	>5270	7.44	>19.3
	" "	Surface Water	16	>5160	7.44	>12.4
Manteca	" "	Surface Water/Effluent	124	>8800	9.14	N/C
	" "	Effluent	117	>8700	7.21	>27.8
	" "	Surface Water	57	7823	7.58	25.0
	" "	Effluent	139	>9500	7.97	>21.2
	" "	Surface Water	104	>11000	8.28	>24.5
	" "	Effluent	128	>9700	7.78	>25.0
	" "	Surface Water	85	>9450	7.85	>25.7
	" "	Effluent	106	>11900	7.66	>15.3
	" "	Surface Water	146	>10650	7.81	>13.7
Modesto	" "	Surface Water/Effluent	120/156	31604	8.96	211
Yuba City	" "	Surface Water/Effluent	114/164[1]	>8000	7.60/7.46	>53.5
Placer County	" "	Effluent	150	>5000	7.4 – 8.7	>13.7
Manteca	*Daphnia magna*	Surface Water/Effluent	124	>8350	9.14	N/C
Modesto	" "	Surface Water/Effluent	120/156	>11900	8.96	>79.6
Yuba City	" "	Surface Water/Effluent	114/164[1]	>8000	7.60/7.46	>53.5
Manteca	*Oncorhynchus mykiss* (rainbow trout)	Surface Water/Effluent	124	>8600	9.14	N/C
Auburn	" "	Surface Water	16	>16500	7.44	N/C
Modesto	" "	Surface Water/Effluent	120/156	>34250	8.96	>229
Yuba City	" "	Surface Water/Effluent	114/164[1]	>8000	7.60/7.46	>53.5

Hardness values may be biased high because the EDTA titrimetic method is subject to interferences that measure as hardness (barium, cadmium, lead, manganese, strontium, and zinc will be measured as hardness) producing hardness numbers that are likely to be greater than the calculation of hardness based upon the ICP analysis of calcium and magnesium. Upstream receiving water hardness ranged from 30 to 50.9 mg/L as $CaCO_3$ between January 2008 and August 2011. Furthermore, the upstream receiving water hardness was 37

Discharger (City)	Species	Test Waters	Hardness Value	Total Aluminum EC_{50} Value	pH	WER

mg/L as $CaCO_3$ on 4 October 2005, 7 days prior to the Feasibility Assessment (first phase of a Water Effects Ratio study) sample collection date of 11 October 2005. It is likely that matrix interferences from other metals were responsible for the unexpected hardness values reported by Pacific EcoRisk.

The Discharger has not conducted a toxicity test for aluminum; however, the Cities of Manteca and Modesto conducted toxicity tests in the San Joaquin River. As shown, the test water quality characteristics of the San Joaquin River near Manteca and Modesto are similar for pH and hardness in Deuel Drain, with the hardness ranging from 57 to 156 mg/L as $CaCO_3$ in comparison to the hardness of the Deuel Drain near the discharge that averages 758 mg/L as $CaCO_3$. Thus results of site-specific studies conducted on the San Joaquin River near Manteca and Modesto would represent conservative assumptions for the Deuel Drain near the discharge. Therefore, the Cities of Manteca and Modesto aluminum toxicity test studies are relevant and represent conservative assumptions in this case for use in determining the specific numerical criteria to be used in determining compliance with the Basin Plan's narrative toxicity objective. The Cities of Manteca and Modesto aluminum toxicity study resulted in a minimum site-specific aluminum objective of 7,823 µg/L. Thus, these results support the conclusion that the 87 µg/L chronic criterion is overly stringent for Deuel Drain near the discharge.

State of California Department of Public Health (DPH) has established Secondary Maximum Contaminant Levels (MCLs) to assist public drinking water systems in managing their drinking water for aesthetic conditions such as taste, color, and odor. The Secondary MCL for aluminum is 200 µg/L. USEPA has also adopted an NAWQC acute criterion of 750 µg/L for the protection of aquatic life.

(b) **RPA Results**. For priority pollutants, the SIP dictates the procedures for conducting the RPA. Aluminum is not a priority pollutant. Therefore, the Central Valley Water Board is not restricted to one particular RPA method. Due to the site-specific conditions of the discharge, the Central Valley Water Board had used its judgment in determining the appropriate method for conducting the RPA for this non-priority pollutant constituent. The most stringent objective is the Secondary MCL, which is derived from human welfare considerations (e.g., taste, odor, laundry staining), not for toxicity. Secondary MCLs are drinking water standards contained in Title 22 of the California Code of Regulations. Title 22 requires compliance with these standards on an annual average basis, when sampling at least quarterly. To be consistent with how compliance with the standards is determined, the RPA was conducted based on the calendar annual average effluent aluminum concentrations.

The maximum observed annual average effluent concentration for aluminum was 20 µg/L (minimum MDL 19 µg/L, minimum RL 50 µg/L) based on four samples collected between 22 December 2010 and 30 April 2013. Effluent aluminum is consistently less than the concentrations in the receiving water and below the Secondary MCL and the NAWQC acute criterion. Therefore, the Central Valley Water Board finds the discharge does not have reasonable potential to cause or

contribute to an exceedance in the receiving water and the Facility is adequately controlling the discharge of aluminum.

ii. **Barium**

(a) **WQO**. Table III-1 of the Basin Plan contains a site-specific numeric objective for the Sacramento-San Joaquin Delta for dissolved barium of 100 µg/L as a maximum concentration.

(b) **RPA Results**. For priority pollutants, the SIP dictates the procedures for conducting the RPA. Barium is not a priority pollutant. Therefore, the Central valley Water Board is not restricted to one particular RPA method. Due to the site-specific conditions of the discharge, the Central Valley Water Board has used its judgment in determining the appropriate method for conducting the RPA for this non-priority pollutant. The most stringent objective is the Basin Plan's site-specific objective of 100 µg/L. The RPA for this non-CTR constituent was conducted based on maximum effluent barium concentrations.

The maximum concentration for barium in the effluent was 97.5 µg/L (minimum MDL 0.1 µg/L, minimum RL 5 µg/L) based on four samples collected between 22 December 2010 and 30 April 2013. Although the receiving water contains barium exceeding the Basin Plan objective, the effluent barium is consistently less than the concentration in the receiving water and the Basin Plan objective. Therefore, the Central Valley Water Board finds the discharge does not have reasonable potential to cause or contribute to an exceedance in the receiving water and the Facility is adequately controlling the discharge of barium

iii. **Bromoform**

(a) **WQO.** The CTR includes a criterion for bromoform of 4.3 µg/L for the protection of human health for waters from which both water and organisms are consumed. WDR's Order R5-2008-0164 contained limitations for bromoform based on the CTR criterion for the protection of human health.

(b) **RPA Results.** Bromoform was not detected in the effluent (minimum MDL 0.1 µg/L, minimum RL 0.5 µg/L) based on 33 samples collected between 22 December 2010 and 30 April 2013. Bromoform was not detected in the upstream receiving water (minimum MDL 0.1 µg/L, minimum RL 0.5 µg/L) based on four samples collected between 13 December 2008 and 30 April 2013. Therefore, bromoform in the discharge does not demonstrate reasonable potential to cause or contribute to an in-stream excursion above the CTR criteria and the effluent limitations for bromoform have not been retained in this Order. Removal of these effluent limitations is in accordance with federal anti-backsliding regulations (see section IV.D.3 of the Fact Sheet).

iv. **Chlorodibromomethane**

(a) **WQO**. The CTR includes a criterion for chlorodibromomethane of 0.41 µg/L for the protection of human health for waters from which both water and organisms are consumed. WDR's Order R5-2008-0164 contained limitations for chlorodibromomethane based on the CTR criterion for the protection of human health.

(b) **RPA Results.** Chlorodibromomethane was not detected in the effluent (minimum MDL 0.08 µg/L, minimum RL 0.5 µg/L) based on 33 samples collected between 22 December 2010 and 30 April 2013. Chlorodibromomethane was not detected in the upstream receiving water (minimum MDL 0.08 µg/L, minimum RL 0.5 µg/L) based on four samples collected between 13 December 2008 and 30 April 2013. Therefore, chlorodibromomethane in the discharge does not demonstrate reasonable potential to cause or contribute to an in-stream excursion above the CTR criteria, and the effluent limitations for chlorodibromomethane have not been retained in this Order. Removal of these effluent limitations is in accordance with federal anti-backsliding regulations (see section IV.D.3 of the Fact Sheet).

v. **Chlorine, Total Residual**

(a) **WQO**. USEPA developed NAWQC for protection of freshwater aquatic life for chlorine residual. The recommended 4-day average (chronic) and 1-hour average (acute) criteria for chlorine residual are 0.011 mg/L and 0.019 mg/L, respectively. These criteria are protective of the Basin Plan's narrative toxicity objective. WDR's Order R5-2008-0164 contained effluent limitations for chlorine residual based on the Basin Plan's narrative objective.

(b) **RPA Results.** Chlorine residual was not detected in the effluent based on 861 samples collected between 22 December 2010 and 30 April 2013. The Discharger converted from chlorine disinfection to UV disinfection in October 2010, and only uses chlorine to periodically clean the membrane filters. During cleaning, there is no effluent flow out of the Facility; rather, the cleaning water is rerouted back to the headworks for treatment. Because chlorine was not detected in the effluent and the Discharger has changed disinfection methods, chlorine in the discharge does not demonstrate reasonable potential to cause or contribute to an in-stream excursion above the Basin Plan narrative objective, and effluent limitations for chlorine residual are not retained in this Order. Monitoring is required, however, during times when chlorine is used to clean membrane filters. Removal of these effluent limitations is in accordance with federal anti-backsliding regulations (see section IV.D.3 of the Fact Sheet).

vi. **Diazinon and Chlorpyrifos**

(a) **WQO**. The Central Valley Water Board completed a TMDL for diazinon and chlorpyrifos in the Sacramento – San Joaquin Delta Waterways and amended the Basin Plan to include diazinon and chlorpyrifos waste load allocations and water quality objectives. The Basin Plan Amendment for the Control of Diazinon and Chlorpyrifos Runoff into the Sacramento – San Joaquin Delta was adopted by the Central Valley Water Board on 23 June 2006 and became effective on 10 October 2007.

The amendments "…*modifies Basin Plan Chapter III (Water Quality Objectives) to establish site specific number objectives for diazinon and chlorpyrifos in the Delta Waterways.*" The amendment also "…*identifies the requirements to meet the additive formula already in Basin Plan Chapter IV (Implementation), for the additive toxicity of diazinon and chlorpyrifos*."

The amendment states that "T*he waste load allocations for all NPDES-permitted dischargers…shall not exceed the sum (S) of one (1) as defined below.*

$$S = \frac{C_d}{WQO_d} + \frac{C_c}{WQO_c} \leq 1.0$$

Where:

C_d = diazinon concentration in µg/L of point source discharge

C_c = chlorpyrifos concentration in µg/L of point source discharge

WQO_d = acute or chronic diazinon water quality objective in µg/L

WQO_c = acute or chronic chlorpyrifos water quality objective in µg/L

Available samples collected within the applicable averaging period for the water quality objective will be used to determine compliance with the allocations and loading capacity. For purposes of calculating the sum (S) above, analytical results that are reported as 'non-detectable' concentrations are considered to be zero."

Appendix A of the Diazinon and Chlorpyrifos TMDL lists waterways subject to the TMDL and includes Deuel Drain.

(b) **RPA Results.** Diazinon and chlorpyrifos were not detected in the effluent based on four samples collected between 22 December 2010 and 30 April 2013. Diazinon and chlorpyrifos were not detected in the upstream receiving water based on four samples collected between 13 December 2008 and 30 April 2013. However, due to the TMDL for diazinon and chlorpyrifos in the Delta, WQBELs for these constituents are required. The TMDL waste load allocation applies to all NPDES discharges to Delta waterways and will serve as the basis for WQBELs.

(c) **WQBELs.** WQBELs for diazinon and chlorpyrifos are required based on the TMDL for diazinon and chlorpyrifos for the Delta. Therefore, this Order includes effluent limits calculated based on the waste load allocations contained in the TMDL, as follows:

(1) Average Monthly Effluent Limit

$$S_{AMEL} = \frac{C_{D\ AVG}}{0.079} + \frac{C_{C\ AVG}}{0.012} \leq 1.0$$

$C_{D\text{-}avg}$ = average monthly diazinon effluent concentration in µg/L

$C_{C\text{-}avg}$ = average monthly chlorpyrifos effluent concentration in µg/L

(2) Maximum Daily Effluent Limit

$$S_{MDEL} = \frac{C_{D\ MAX}}{0.16} + \frac{C_{C\ MAX}}{0.025} \leq 1.0$$

$C_{D\text{-}max}$ = maximum daily diazinon effluent concentration in µg/L

$C_{C\text{-}max}$ = maximum daily chlorpyrifos effluent concentration µg/L

(d) **Plant Performance and Attainability**. Diazinon and chlorpyrifos were not detected in the effluent. The Central Valley Water Board concludes therefore, that immediate compliance with these effluent limitations is feasible.

vii. **Dichlorobromomethane**

(a) **WQO**. The CTR includes a criterion for dichlorobromomethane of 0.56 µg/L for the protection of human health for waters from which both water and organisms are consumed. WDR's Order R5-2008-0164 contained limitations for dichlorobromomethane based on the CTR criterion for the protection of human health.

(b) **RPA Results.** Dichlorobromomethane was detected but not quantified in one effluent sample at an estimated concentration of 0.1 µg/L (minimum MDL 0.1 µg/L, minimum RL 0.5 µg/L) based on 33 samples collected between 22 December 2010 and 30 April 2013. Dichlorobromomethane was not detected in the upstream receiving water based on four samples collected between 13 December 2008 and 30 April 2013. Therefore, dichlorobromomethane in the discharge does not demonstrate reasonable potential to cause or contribute to an in-stream excursion above the CTR criteria, and the effluent limitations for dichlorobromomethane have not been retained in this Order. Removal of these effluent limitations is in accordance with federal anti-backsliding regulations (see section IV.D.3 of the Fact Sheet).

viii. **Iron**

(a) **WQO**. The Secondary MCL – Consumer Acceptance Limit for iron is 300 µg/L, which is used to implement the Basin Plan's chemical constituent objective for the protection of municipal and domestic supply. The Basin Plan contains a site-specific numeric objective for the Delta of 300 µg/L (maximum concentration) for iron, expressed as dissolved metal, based on the Secondary MCL.

(b) **RPA Results**. For priority pollutants, the SIP dictates the procedures for conducting the RPA. Iron is not a priority pollutant. Therefore, the Central Valley Water Board is not restricted to one particular RPA method. Due to the site-specific conditions of the discharge, the Central Valley Water Board has used its judgment in determining the appropriate method for conducting the RPA for this non-priority pollutant constituent. The most stringent objective is the site-specific Basin Plan objective based on the Secondary MCL, which is derived from human welfare considerations (e.g., taste, odor, laundry staining), not for toxicity. Secondary MCLs are drinking water standards contained in Title 22 of the California Code of Regulations. Title 22 requires compliance with these standards on an annual average basis, when sampling at least quarterly. To be consistent with how compliance with the standards is determined, the RPA was conducted based on the calendar annual average effluent iron concentrations.

The maximum annual average effluent iron concentration was 7.6 µg/L (minimum MDL 11 µg/L, minimum RL 12 µg/L) based on four samples collected between 22 December 2010 and 30 April 2013. Effluent iron is consistently less than the concentrations in the receiving water and below the Secondary MCL. Therefore, the Central Valley Water Board finds the discharge does not have reasonable potential to cause or contribute to an exceedance in the receiving water and the Facility is adequately controlling the discharge of iron.

ix. **Manganese**

(a) **WQO**. The Secondary MCL – Consumer Acceptance Limit for manganese is 50 µg/L, which is used to implement the Basin Plan's chemical constituent objective for the protection of municipal and domestic supply. The Basin Plan contains a site-specific numeric objective for the Delta of 50 µg/L (maximum concentration) for manganese, expressed as dissolved metal, based on the Secondary MCL.

(b) **RPA Results**. For priority pollutants, the SIP dictates the procedures for conducting the RPA. Manganese is not a priority pollutant. Therefore, the Central Valley Water Board is not restricted to one particular RPA method. Due to the site-specific conditions of the discharge, the Central Valley Water Board has used its judgment in determining the appropriate method for conducting the RPA for this non-priority pollutant constituent. The most stringent objective is the site-specific Basin Plan objective based on the Secondary MCL, which is derived from human welfare considerations (e.g., taste, odor, laundry staining), not for toxicity. Secondary MCLs are drinking water standards contained in Title 22 of the California Code of Regulations. Title 22 requires compliance with these standards on an annual average basis, when sampling at least quarterly. To be consistent with how compliance with the standards is determined, the RPA was conducted based on the calendar annual average effluent manganese concentrations.

The maximum annual average manganese concentration was 34 µg/L (minimum MDL 1.3 µg/L, minimum RL 10 µg/L) based on four samples collected between 22 December 2010 and 30 April 2013. Effluent manganese is consistently less than the concentrations in the receiving water and below the Secondary MCL. Therefore, the Central Valley Water Board finds the discharge does not have reasonable potential to cause or contribute to an exceedance in the receiving water and the Facility is adequately controlling the discharge of manganese.

b. **Constituents with Limited Data**. Reasonable potential cannot be determined for the following constituents because effluent data are limited or ambient background concentrations are not available or insufficient.

i. **Lead, Total Recoverable**

(a) **WQO**. The CTR includes hardness-dependent criteria for the protection of freshwater aquatic life for lead. These criteria for lead are presented in dissolved concentrations, as 1-hour acute criteria and 4-day chronic criteria. USEPA recommends conversion factors to translate dissolved concentrations to total concentrations. Default USEPA translators were used for the receiving water and effluent.

(b) **RPA Results.** Section IV.C.2 of this Fact Sheet includes procedures for conducting the RPA for hardness-dependent CTR metals, such as lead. The CTR includes hardness-dependent criteria for lead for the receiving water. The RPA was conducted using the upstream receiving water hardness to calculate the criteria for comparison to the maximum ambient background concentration, and likewise using the reasonable worst-case downstream hardness to compare the MEC. The table below shows the specific criteria used for the RPA.

Table F-12. Lead RPA

	CTR Chronic Criterion (Total Recoverable)	Maximum Concentration (Total Recoverable)	Reasonable Potential? (Y/N)
Receiving Water	3.8 µg/L[1]	J 4.0 µg/L	Inconclusive[2]
Effluent	16 µg/L[3]	J 5.5 µg/L	No[4]

1 Based on lowest observed upstream hardness of 116 mg/L (as $CaCO_3$).
2 Per Section 1.3, step 4 of the SIP.
3 Based on reasonable worst-case downstream hardness of 400 mg/L (as $CaCO_3$).
4 Per Section 1.3, step 6 of the SIP.

Total recoverable lead was detected but not quantified in the effluent in two out of four effluent samples collected between 22 December 2010 and 30 April 2013 (see table below). Total recoverable lead was detected but not quantified in the upstream receiving water in three out of four effluent samples collected between 13 December 2008 and 30 April 2013 (see table below). Since the effluent and receiving water data was detected but not quantified, the data is insufficient per Section 1.2 of the SIP.

Table F-13. Summary of Effluent and Receiving Water Data for Lead

Sample Date	Method Detection Level (MDL)	Reporting Level (RL)	Lead Effluent Result
Effluent Data			
27 January 2011	1.3	7	J 2.4
26 April 2011	1.3	7	ND
19 July 2011	1.3	7	ND
25 October 2011	1.3	7	J 5.5
Receiving Water Data			
27 January 2011	1.3	7	J 4
26 April 2011	1.3	7	J 2.2
19 July 2011	1.3	7	ND
25 October 2011	1.3	7	J 1.6

SIP Section 2.4.2 states that the Minimum Level (ML) is the lowest quantifiable concentration in a sample based on the proper application of all method-based analytical procedures and the absence of any matrix interferences.

(1) Required MLs are listed in Appendix 4 of the SIP. Where more than one ML is listed in Appendix 4, the discharger may select any one of the cited analytical methods for compliance determination. The selected ML used for compliance determination is referred to as the Reporting Level (RL).

(2) SIP Section 1.2 requires that the Regional Board use all available, valid, relevant, representative data and information, as determined by the Regional Board, to implement the SIP. SIP Section 1.2 further states that the Regional Board has the discretion to consider if any data are inappropriate or insufficient for use in implementing the SIP.

(3) Data reported below an RL indicates the data may not be valid due to possible matrix interferences during the analytical procedure.

(4) Further, SIP Section 2.4.5 (Compliance Determination) supports the insufficiency of data reported below the ML or RL. In part it states, "*Dischargers shall be deemed out of compliance with an effluent limitation, for reporting and administrative enforcement purposes, if the concentration of the priority pollutant in the monitoring sample is greater than the effluent limitation and greater than or equal to the RL*." Thus, if submitted data is below the RL, that data cannot be used to determine compliance with effluent limitations.

(5) Data reported at an RL that does not conform to the SIP MLs is not considered valid data for use in determining reasonable potential. Therefore, in accordance with Section 1.2 of the SIP, the Central Valley Water Board has determined that data reported at an RL that does not conform to the SIP MLs is inappropriate and insufficient to be used to determine reasonable potential.

(6) In implementing its discretion, the Central Valley Water Board is not finding that reasonable potential does not exist; rather the Central Valley Water Board cannot make such a determination given the invalid data. Therefore, the Central Valley Water Board will require additional monitoring for such constituents until such time a determination can be made in accordance with the SIP policy.

SIP Appendix 4 cites several MLs for lead. The MLs below the applicable criteria cited for lead are 0.5 µg/L and 2 µg/L. The Discharger used an analytical method that was not as sensitive as the ML required by the SIP. The effluent and receiving water results were all non-detects or estimated values (i.e., detected by not quantified). Therefore, the submitted effluent and receiving water lead data is inappropriate and insufficient to determine reasonable potential under the SIP.

Section 1.3, Step 6 of the SIP states that if the receiving water concentration exceeds the criteria and the pollutant is detected in the effluent, an effluent limitation is required. However; as discussed in detail above, insufficient effluent and receiving water data is available at this time to justify establishing an effluent limitation for lead.

Section 1.3, Step 8 of the SIP allows the Central Valley Water Board to require additional monitoring for a pollutant in place of an effluent limitation if data are unavailable or insufficient. Instead of limitations, additional monitoring has been established for lead in both the effluent and the receiving water. Should monitoring results indicate that the discharge has the reasonable potential to cause or contribute to an exceedance of a water quality standard, this Order may be reopened and modified by adding appropriate effluent limitations.

ii. **Selenium, Total Recoverable**

(a) **WQO**. The CTR includes acute and criteria for selenium for the protection of freshwater aquatic life of 20 µg/L and 5 µg/L, respectively.

(b) **RPA Results**. Selenium was detected but not quantified in the effluent at an estimated concentration of 17.3 µg/L, in one out of four samples

collected between 22 December 2010 and 30 April 2013. Selenium was detected but not quantified in the upstream receiving water at an estimated concentration of 3.6 µg/L in one out of four samples collected between 13 December 2008 and 30 April 2013. Since the effluent and receiving water data was detected but not quantified, the data is insufficient per Section 1.2 of the SIP.

Table F-14. Summary of Effluent and Receiving Water Data for Selenium

Sample Date	Method Detection Level (MDL)	Reporting Level (RL)	Selenium Effluent Result
Effluent Data			
27 January 2011	2.6	20	J 17.3
26 April 2011	2.6	20	ND
19 July 2011	2.6	20	ND
25 October 2011	2.6	20	ND
Receiving Water Data			
27 January 2011	2.6	20	ND
26 April 2011	2.6	20	ND
19 July 2011	2.6	20	ND
25 October 2011	2.6	20	J 3.6

SIP Section 2.4.2 states that the ML is the lowest quantifiable concentration in a sample based on the proper application of all method-based analytical procedures and the absence of any matrix interferences.

(1) Required MLs are listed in Appendix 4 of the SIP. Where more than one ML is listed in Appendix 4, the discharger may select any one of the cited analytical methods for compliance determination. The selected ML used for compliance determination is referred to as the RL.

(2) SIP Section 1.2 requires that the Regional Board use all available, valid, relevant, representative data and information, as determined by the Regional Board, to implement the SIP. SIP Section 1.2 further states that the Regional Board has the discretion to consider if any data are inappropriate or insufficient for use in implementing the SIP.

(3) Data reported below an RL indicates the data may not be valid due to possible matrix interferences during the analytical procedure.

(4) Further, SIP Section 2.4.5 (Compliance Determination) supports the insufficiency of data reported below the ML or RL. In part it states, "*Dischargers shall be deemed out of compliance with an effluent limitation, for reporting and administrative enforcement purposes, if the concentration of the priority pollutant in the monitoring sample is greater than the effluent limitation and greater than or equal to the RL*." Thus, if submitted data is below the RL, that data cannot be used to determine compliance with effluent limitations.

(5) Data reported at an RL that does not conform to the SIP MLs is not considered valid data for use in determining reasonable potential. Therefore, in accordance with Section 1.2 of the SIP, the Central Valley Water Board has determined that data reported at an RL that

does not conform to the SIP MLs is inappropriate and insufficient to be used to determine reasonable potential.

(6) In implementing its discretion, the Central Valley Water Board is not finding that reasonable potential does not exist; rather the Central Valley Water Board cannot make such a determination given the invalid data. Therefore, the Central Valley Water Board will require additional monitoring for such constituents until such time a determination can be made in accordance with the SIP policy.

SIP Appendix 4 cites several MLs for selenium. The MLs below the applicable criteria cited for selenium are 1 µg/L, 2 µg/L, and 5 µg/L. The Discharger used an analytical method that was not as sensitive as the ML required by the SIP. The effluent and receiving water results were all non-detects or estimated values (i.e., detected by not quantified). Therefore, the submitted effluent and receiving water selenium data is inappropriate and insufficient to determine reasonable potential under the SIP.

Section 1.3, Step 8 of the SIP allows the Central Valley Water Board to require additional monitoring for a pollutant in place of an effluent limitation if data are unavailable or insufficient. Instead of limitations, additional monitoring has been established for selenium in both the effluent and the receiving water. Should monitoring results indicate that the discharge has the reasonable potential to cause or contribute to an exceedance of a water quality standard, this Order may be reopened and modified by adding appropriate effluent limitations.

iii. **Thallium, Total Recoverable**

(a) **WQO**. The CTR includes criteria of 1.7 µg/L for the protection of human health for waters from which both water and organisms are consumed.

(b) **RPA Results**. Thallium was detected but not quantified in the effluent at an estimated concentration of 13 µg/L, in one out of four samples collected between 22 December 2013 and 30 April 2013. Thallium was detected but not quantified in the upstream receiving water at an estimated concentration of 7.1 µg/L, in one out of four samples collected between 13 December 2008 and 30 April 2013. Since the effluent and receiving water data was detected but not quantified, the data is insufficient per Section 1.2 of the SIP.

Table F-15. Summary of Effluent and Receiving Water Data for Thallium

Sample Date	Method Detection Level (MDL)	Reporting Level (RL)	Thallium Effluent Result
Effluent Data			
27 January 2011	4.5	20	J 13.4
26 April 2011	4.5	20	ND
19 July 2011	4.5	20	ND
25 October 2011	4.5	20	ND
Receiving Water Data			
27 January 2011	4.5	20	ND
26 April 2011	4.5	20	J 7.1
19 July 2011	4.5	20	ND

Sample Date	Method Detection Level (MDL)	Reporting Level (RL)	Thallium Effluent Result
25 October 2011	4.5	20	ND

SIP Section 2.4.2 states that the ML is the lowest quantifiable concentration in a sample based on the proper application of all method-based analytical procedures and the absence of any matrix interferences.

(1) Required MLs are listed in Appendix 4 of the SIP. Where more than one ML is listed in Appendix 4, the discharger may select any one of the cited analytical methods for compliance determination. The selected ML used for compliance determination is referred to as the RL.

(2) SIP Section 1.2 requires that the Regional Board use all available, valid, relevant, representative data and information, as determined by the Regional Board, to implement the SIP. SIP Section 1.2 further states that the Regional Board has the discretion to consider if any data are inappropriate or insufficient for use in implementing the SIP.

(3) Data reported below an RL indicates the data may not be valid due to possible matrix interferences during the analytical procedure.

(4) Further, SIP Section 2.4.5 (Compliance Determination) supports the insufficiency of data reported below the ML or RL. In part it states, "*Dischargers shall be deemed out of compliance with an effluent limitation, for reporting and administrative enforcement purposes, if the concentration of the priority pollutant in the monitoring sample is greater than the effluent limitation and greater than or equal to the RL*." Thus, if submitted data is below the RL, that data cannot be used to determine compliance with effluent limitations.

(5) Data reported at an RL that does not conform to the SIP MLs is not considered valid data for use in determining reasonable potential. Therefore, in accordance with Section 1.2 of the SIP, the Central Valley Water Board has determined that data reported at an RL that does not conform to the SIP MLs is inappropriate and insufficient to be used to determine reasonable potential.

(6) In implementing its discretion, the Central Valley Water Board is not finding that reasonable potential does not exist; rather the Central Valley Water Board cannot make such a determination given the invalid data. Therefore, the Central Valley Water Board will require additional monitoring for such constituents until such time a determination can be made in accordance with the SIP policy.

SIP Appendix 4 cites several MLs for thallium. The MLs below the applicable criteria cited for thallium are 0.5 µg/L and 2 µg/L. The Discharger used an analytical method that was not as sensitive as the ML required by the SIP. The effluent and receiving water results were all non-detects or estimated values (i.e., detected by not quantified). Therefore, the submitted effluent and receiving water thallium data is inappropriate and insufficient to determine reasonable potential under the SIP.

Section 1.3, Step 6 of the SIP states that if the receiving water concentration exceeds the criteria and the pollutant is detected in the effluent, an effluent limitation is required. However; as discussed in detail above, insufficient effluent and receiving water data is available at this time to justify establishing an effluent limitation for thallium.

Section 1.3, Step 8 of the SIP allows the Central Valley Water Board to require additional monitoring for a pollutant in place of an effluent limitation if data are unavailable or insufficient. Instead of limitations, additional monitoring has been established for thallium in both the effluent and the receiving water. Should monitoring results indicate that the discharge has the reasonable potential to cause or contribute to an exceedance of a water quality standard, this Order may be reopened and modified by adding appropriate effluent limitations.

c. **Constituents with Reasonable Potential**. The Central Valley Water Board finds that the discharge has a reasonable potential to cause or contribute to an in-stream excursion above a water quality standard for ammonia, BOD_5, copper, cyanide, methylmercury, nitrate plus nitrite, pH, temperature, total coliform organisms, and TSS. WQBELs for these constituents are included in this Order. A summary of the RPA is provided in Attachment G, and a detailed discussion of the RPA for each constituent is provided below.

i. **Ammonia**

(a) **WQO.** The NAWQC for the protection of freshwater aquatic life for total ammonia, recommends acute (1-hour average; criteria maximum concentration or CMC) standards based on pH and chronic (30-day average; criteria continuous concentration or CCC) standards based on pH and temperature. USEPA also recommends that no 4-day average concentration should exceed 2.5 times the 30-day CCC. USEPA found that as pH increased, both the acute and chronic toxicity of ammonia increased. Salmonids were more sensitive to acute toxicity effects than other species. However, while the acute toxicity of ammonia was not influenced by temperature, it was found that invertebrates and young fish experienced increasing chronic toxicity effects with increasing temperature. Because the Deuel Drain has a beneficial use of cold freshwater habitat and the presence of salmonids and early fish life stages in the Sacramento-San Joaquin Delta is well-documented, the recommended criteria for waters where salmonids and early life stages are present, were used.

The maximum permitted effluent pH is 8.5 as the Basin Plan objective for pH in the receiving stream is the range of 6.5 to 8.5. In order to protect against the worst-case short-term exposure of an organism, a pH value of 8.5 was used to derive the acute criterion. The resulting acute criterion is 2.14 mg/L.

A chronic criterion was calculated for each day when paired temperature data and pH were measure using the downstream receiving water data for temperature and pH. Rolling 30-day average criteria were calculated from downstream receiving water data using the criteria calculated for each day and the minimum observed 30-day average criterion was established as the applicable 30-day average chronic criterion, or 30-day CCC. The most stringent 30-day CCC was 0.78 mg/L (as N) based on the downstream

receiving water. The 4-day average concentration is derived in accordance with the USEPA criterion as 2.5 times the 30-day CCC. Based on the 30-day CCC of 0.78 mg/L (as N), the 4-day average concentration that should not be exceeded is 1.95 mg/L.

(b) **RPA Results.** The Facility treats domestic wastewater. Untreated domestic wastewater contains ammonia in concentrations that, without treatment, would be harmful to fish and would violate the Basin Plan narrative toxicity objective if discharged to the receiving water. Reasonable potential therefore exists and effluent limitations are required.

Federal regulations at 40 CFR §122.44(d)(1)(i) requires that, "*Limitations must control all pollutants or pollutant parameters (either conventional, nonconventional, or toxic pollutants) which the Director determines are or may be discharged at a level which will cause, have the reasonable potential to cause, or contribute to an excursion above any State water quality standard, including State narrative criteria for water quality*." For priority pollutants, the SIP dictates the procedures for conducting the RPA. Ammonia is not a priority pollutant. Therefore, the Central Valley Water Board is not restricted to one particular RPA method. Due to the site-specific conditions of the discharge, the Central Valley Water Board has used professional judgment in determining the appropriate method for conducting the RPA for this non-priority pollutant constituent.

USEPA's September 2010 NPDES Permit Writer's Manual, page 6-30, states, "*State implementation procedures might allow, or even require, a permit writer to determine reasonable potential through a qualitative assessment process without using available facility-specific effluent monitoring data or when such data are not available…A permitting authority might also determine that WQBELs are required for specific pollutants for all facilities that exhibit certain operational or discharge characteristics (e.g., WQBELs for pathogens in all permits for POTWs discharging to contact recreational waters)*." USEPA's TSD also recommends that factors other than effluent data should be considered in the RPA, "*When determining whether or not a discharge causes, has the reasonable potential to cause, or contributes to an excursion of a numeric or narrative water quality criterion for individual toxicants or for toxicity, the regulatory authority can use a variety of factors and information where facility-specific effluent monitoring data are unavailable. These factors also should be considered with available effluent monitoring data*." With regard to POTWs, USEPA recommends that, "*POTWs should also be characterized for the possibility of chlorine and ammonia problems*." (TSD, p. 50).

Nitrification is a biological process that converts ammonia to nitrite and nitrite to nitrate. Denitrification is a process that converts nitrate to nitrite or nitric oxide and then to nitrous oxide or nitrogen gas, which is then released to the atmosphere. The Discharger currently uses nitrification to remove ammonia from the waste stream. Inadequate or incomplete nitrification may result in the discharge of ammonia to the receiving stream. Ammonia is known to cause toxicity to aquatic organisms in surface waters. Discharges of ammonia in concentrations that produce detrimental physiological responses to human, plant, animal, or aquatic life

would violate the Basin Plan narrative toxicity objective. Although the Discharger nitrifies the discharge, inadequate or incomplete nitrification creates the potential for ammonia to be discharged and provides the basis for the discharge to have a reasonable potential to cause or contribute to an in-stream excursion above the NAWQC. Therefore, the Central Valley Water Board finds the discharge has reasonable potential for ammonia and WQBELs are required.

(c) **WQBELs.** Order R5-2008-0164 established an average monthly effluent limitation (AMEL) of 0.7 mg/L and a maximum daily effluent limitation (MDEL) of 2.2 mg/L for ammonia. The development of fixed WQBELs for ammonia can be complex due to the variable ammonia criteria. In State Water Board WQ 2009-0003 for the City of Tracy, the State Water Board determined that the permit lacked an adequate rationale for development of the fixed WQBELs for ammonia using the median receiving water pH and remanded the permit to the Central Valley Water Board to either provide sufficient justification for the effluent limits or modify the limits. In the above approach for determining the appropriate chronic criterion, an assumption is made that the compliant discharge (i.e., meets ammonia criteria) causes a non-compliant situation in the receiving water due to changes in pH and/or temperature that result in a more stringent chronic criterion. In this approach, the ammonia concentrations in the effluent are assumed to remain the same downstream of the discharge, whereas the pH and temperature change. This is a conservative approach and is used when there is insufficient ammonia receiving water data to determine the actual ambient ammonia concentrations. For the Discharger, there is monthly ammonia monitoring in the receiving water, along with pH and temperature monitoring.

In a similar situation for the City of Stockton, receiving water ammonia concentrations were compared to paired 30-day average chronic ammonia criteria to determine if the discharge caused the receiving water criterion to be exceeded in the receiving water. Based on the receiving water data, the ammonia criteria were never exceeded and it was determined that the current ammonia effluent limits were adequately protective. In the case of Stockton where this evaluation was used to justify current effluent limits, the permit was petitioned and the State Water Board agreed with this approach.

This same evaluation was conducted for the Discharger. Receiving water ammonia, pH, and temperature data were evaluated since implementation of the current ammonia effluent limits. The figure below shows the paired effluent and downstream receiving water ammonia concentrations at Monitoring Locations EFF-001 and RSW-002, respectively, based on data collected between 22 December 2010 and 30 April 2013.

Figure F-1. Paired Effluent and Downstream Receiving Water Ammonia Data

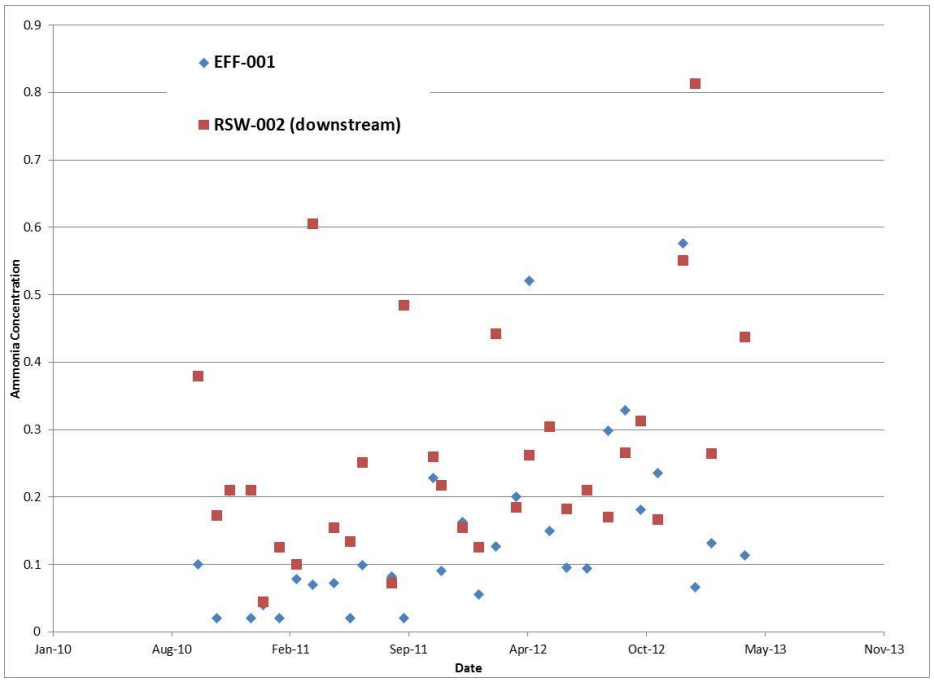

As demonstrated in the figure, the downstream receiving water ammonia concentrations have been below the 30-day chronic criterion of 0.78 mg/L in all but one sample based on 31 samples. On the date of the downstream exceedance (8 January 2013), the effluent ammonia concentration of 0.066 mg/L was well below the 30-day chronic criterion. This demonstrates that the discharge is not causing exceedances of the ammonia criteria in the receiving water. Therefore, based on this information, it is justified to maintain the final effluent limits for ammonia. During each permit renewal, the ammonia effluent limitations will be re-evaluated to ensure they are adequately protective of the aquatic life beneficial uses. This Order contains final AMEL and MDEL for ammonia of 0.7 mg/L and 2.2 mg/L, respectively (See Attachment H for WQBEL calculations).

(d) **Plant Performance and Attainability.** Analysis of the effluent data shows that the maximum concentration of ammonia in the effluent of 1.28 mg/L is less than the applicable MDEL and the maximum average monthly concentration of 0.51 mg/L is less than the applicable AMEL. The Central Valley Water Board concludes, therefore, that immediate compliance with these effluent limitations is feasible.

ii. **Copper**

(a) **WQO.** The CTR includes hardness-dependent-criteria for the protection of freshwater aquatic life for copper. These criteria for copper are presented in dissolved concentrations, as 1-hour acute criteria and 4-day chronic criteria. USEPA recommends conversion factors to translate dissolved concentrations to total concentrations.

The Basin Plan includes a site-specific objective for the Sacramento – San Joaquin Delta of 10 µg/L (dissolved) as a maximum concentration.

Using the default U.S. EPA translator, the Basin Plan objective for copper is 10.4 µg/L (total recoverable).

Footnote 4, page 3, of the Introduction of the SIP states, "*If a water quality objective and a CTR criterion are in effect for the same priority pollutant, the more stringent of the two applies*." The Basin Plan objective cannot be directly compared to the CTR criteria to determine which is the most stringent objective because they have different averaging periods and the CTR criteria vary with hardness. In this situation, the RPA has been conducted considering both the CTR criteria and the Basin Plan site-specific objective.

(b) RPA Results. Section IV.C.2 of this Fact Sheet includes procedures for conducting the RPA for hardness-dependent CTR metals, such as copper. The CTR includes hardness-dependent criteria for copper for the receiving water. The RPA was conducted using the upstream receiving water hardness to calculate the criteria for comparison to the maximum ambient background concentration, and likewise using the reasonable worst-case downstream hardness to compare the MEC. The table below shows the specific criteria used for the RPA.

Table F-16. Copper RPA

	CTR Chronic Criteria (Total Recoverable)	Site-Specific BP Objective (Total Recoverable)	Maximum Concentration	Reasonable Potential? (Y/N)
Receiving Water	11 µg/L[1]	10.4 µg/L	16 µg/L[2]	Yes
Effluent	30 µg/L[3]	10.4 µg/L	11.4 µg/L[4]	Yes

[1] Based on lowest observed upstream receiving water hardness of 116 mg/L (as $CaCO_3$).
[2] Maximum ambient background receiving water copper concentration based on four samples collected between 13 December 2008 and 30 April 2013.
[3] Based on reasonable worst-case downstream hardness of 384 mg/L (as $CaCO_3$)
[4] MEC for copper based on four samples collected between 22 December 2010 and 30 April 2013.

Based on the available data, copper in the discharge has reasonable potential to cause or contribute to an in-stream excursion above the CTR criteria for the protection of freshwater aquatic life criterion and site-specific Basin Plan objective.

(c) **WQBELs.** In accordance with the SIP, the more stringent of the two applicable criteria, the CTR criteria and the Basin Plan objective, was used to determine reasonable potential. The resulting WQBELs that are calculated based on the CTR criteria result in WQBELs exceeding the Basin Plan objective (see table below).

WQBELs	AMEL	MDEL
CTR Chronic Criterion (Aquatic Life)	25	49
Basin Plan Objective[1]	--	10 µg/L

[1] Fourth Edition of the Water Quality Control Plan (Basin Plan) for the Sacramento River and San Joaquin River Basins, Table III-1, Copper. Applicable to the Sacramento – San Joaquin Delta, Appendix 42 Waterways, 87, Paradise Cut, and 98, San Joaquin River, to which Deuel

Drain is tributary.

Consequently, the WQBELs have been developed using the BP objective resulting in an MDEL 10 µg/L (total recoverable). The SIP requires AEMLs and MDELs for CTR constituents. The site-specific objective for copper is established as a maximum concentration. Therefore, it is impractical to calculate and AMEL for copper using the Basin Plan objective. Therefore, an AMEL of 25 µg/L was calculated using CTR criteria. This Order includes an AMEL and MDEL of 25 µg/L and 10 µg/L, respectively, as total recoverable copper.

(d) **Plant Performance and Attainability**. Analysis of the effluent data shows that the MEC is greater than applicable WQBELs. Based on the sample results for the effluent, the limitations appear to put the Discharger in immediate non-compliance.

iii. **Cyanide**

(a) **WQO**. The CTR includes maximum 1-hour average and 4-day average criteria of 22 µg/L and 5.2 µg/L, respectively, for cyanide, for the protection of freshwater aquatic life.

(b) **RPA Results**. The MEC for cyanide was 7.92 µg/L (minimum MDL 0.9 µg/L, minimum RL 5 µg/L) based on four samples collected between 22 December 2010 and 30 April 2013. The maximum receiving water cyanide concentration was 21.8 µg/L (minimum MDL 0.9 µg/L, minimum RL 5 µg/L) based on four samples collected between 13 December 2008 and 30 April 2013. Therefore, cyanide in the discharge has a reasonable potential to cause or contribute to an in-stream excursion above the CTR criteria for the protection of freshwater aquatic life.

(c) **WQBELs.** This Order contains a final AMEL and MDEL for cyanide of 4.3 µg/L and 8.5 µg/L, respectively, based on the CTR criterion for the protection of freshwater aquatic life.

(d) **Plant Performance and Attainability.** Analysis of the effluent data shows that the MEC is greater than applicable WQBELs. Based on the sample results for the effluent, the limitations appear to put the Discharger in immediate non-compliance.

iv. **Mercury and Methylmercury**

(a) **WQO.** The Basin Plan contains fish tissue objectives for all Delta waterways listed in Appendix 43 of the Basin Plan that states, "…*the average methylmercury concentrations shall not exceed 0.08 and 0.24 mg methylmercury/kg, wet weight, in muscle tissue of trophic level 3 and 4 fish, respectively (150-500 mm total length). The average methylmercury concentrations shall not exceed 0.03 mg methylmercury/kg, wet weight, in whole fish less than 50 mm in length.*" The Delta Mercury Control Program contains aqueous methylmercury waste load allocations that are calculated to achieve the fish tissue objectives. Methylmercury reductions are assigned to discharges with concentrations of methylmercury greater than 0.06 ng/L (the concentration of methylmercury in water to meet the fish tissue objectives). The Facility is allocated 0.021 g/year of methylmercury, as listed in Table IV.7B of the Basin Plan.

The CTR contains a human health criterion (based on a threshold dose level causing neurological effects in infants) of 50 ng/L for total mercury for waters from which both water and aquatic organisms are consumed. However, in 40 CFR Part 131, USEPA acknowledges that the human health criteria may not be protective of some aquatic or endangered species and that "…*more stringent mercury limits may be determined and implemented through use of the State's narrative criterion.*" In the CTR, USEPA reserved the mercury criteria for freshwater and aquatic life and may adopt new criteria at a later date.

(b) **RPA Results.** Section 1.3 of the SIP states, "*The RWQCB shall conduct the analysis in this section for each priority pollutant with an applicable criterion or objective,* ***excluding priority pollutants for which a Total Maximum Daily Load (TMDL) has been developed, to determine if a water quality-based effluent limitation is required in the discharger's permit***." (emphasis added) Although a RPA is not required, based on the available effluent and receiving water methylmercury data, it appears the discharge is causing or contributing to an exceedance of the concentration of methylmercury in water to meet the site-specific fish tissue objectives in the Basin Plan.

Effluent and receiving water monitoring data for methylmercury is not available. The MEC for total mercury was 0.028 µg/L based on 32 samples collected between 22 December 2010 and 30 April 2013 (minimum MDL 0.05 µg/L, minimum RL 0.2 µg/L). Total mercury was not detected in the upstream receiving water based on four samples collected between 13 December 2008 and 30 April 2013 (minimum MDL 0.05 µg/L, minimum RL 0.2 µg/L).

(c) **WQBELs.** The Basin Plan's Delta Mercury Control Program includes wasteload allocations for POTWs in the Delta, including for the Discharger. This Order contains final WQBELs for methylmercury based on the wasteload allocation. The total calendar annual methylmercury load shall not exceed 0.021 grams.

(d) **Plant Performance and Attainability.** Based on available effluent mercury data, the Central Valley Water Board finds the Discharger is unable to immediately comply with the final WQBELs for methylmercury. Therefore, a compliance schedule in accordance with the State Water Board's Compliance Schedule Policy and the Delta Mercury Control Program has been established in this Order.

v. **Nitrate and Nitrite**

(a) **WQO.** DPH has adopted Primary MCLs for the protection of human health for nitrite and nitrate that are equal to 1 mg/L and 10 mg/L (measured as nitrogen), respectively. DPH has also adopted a primary MCL of 10 mg/L for the sum of nitrate and nitrite, measured as nitrogen.

USEPA has developed a primary MCL and an MCL goal of 1 mg/L for nitrite (as nitrogen). For nitrate, USEPA has developed Drinking Water Standards (10 mg/L as Primary MCL) and NAWQC for protection of human health (10 mg/L for non-cancer health effects). Recent toxicity studies have indicated a possibility that nitrate is toxic to aquatic organisms.

(b) **RPA Results.** The Facility treats domestic wastewater. Untreated domestic wastewater contains ammonia in concentrations that, if untreated, will be harmful to fish and will violate the Basin Plan's narrative toxicity objective. This Order, therefore, requires removal of ammonia (i.e., nitrification). Nitrification is a biological process that converts ammonia to nitrate and nitrite, and will result in effluent nitrate concentrations above the Primary MCL for nitrate plus nitrite. Nitrate concentrations in a drinking water supply above the Primary MCL threatens the health of human fetuses and newborn babies by reducing the oxygen-carrying capacity of the blood (methemoglobinemia). Reasonable potential for nitrate and nitrite therefore exists and WQBELs are required.

Federal regulations at 40 CFR §122.44(d)(1)(i) requires that, "*Limitations must control all pollutants or pollutant parameters (either conventional, nonconventional, or toxic pollutants) which the Director determines are or may be discharged at a level which will cause, have the reasonable potential to cause, or contribute to an excursion above any State water quality standard, including State narrative criteria for water quality*." For priority pollutants, the SIP dictates the procedures for conducting the RPA. Nitrate and nitrite are not priority pollutants. Therefore, the Central Valley Water Board is not restricted to one particular RPA method. Due to the site-specific conditions of the discharge, the Central Valley Water Board has used professional judgment in determining the appropriate method for conducting the RPA for this non-priority pollutant constituent.

USEPA's September 2010 NPDES Permit Writer's Manual, page 6-30, states, "*State implementation procedures might allow, or even require, a permit writer to determine reasonable potential through a qualitative assessment process without using available facility-specific effluent monitoring data or when such data are not available…A permitting authority might also determine that WQBELs are required for specific pollutants for all facilities that exhibit certain operational or discharge characteristics (e.g., WQBELs for pathogens in all permits for POTWs discharging to contact recreational waters)."* USEPA's TSD also recommends that factors other than effluent data should be considered in the RPA, "*When determining whether or not a discharge causes, has the reasonable potential to cause, or contributes to an excursion of a numeric or narrative water quality criterion for individual toxicants or for toxicity, the regulatory authority can use a variety of factors and information where facility-specific effluent monitoring data are unavailable. These factors also should be considered with available effluent monitoring data*." With regard to POTWS, USEPA recommends that, "*POTWs should also be characterized for the possibility of chlorine and ammonia problems*." (TSD, p. 50).

The concentration of nitrogen in raw domestic wastewater is sufficiently high that the resultant treated wastewater has a reasonable potential to exceed or threaten to exceed the primary MCL for nitrate plus nitrite unless the wastewater is treated for nitrogen removal, and therefore an effluent limit for nitrate plus nitrite is required. Denitrification is a process that converts nitrate to nitrite or nitric oxide and then to nitrous oxide or nitrogen gas, which is then released to the atmosphere. The Discharger

currently uses nitrification/denitrification to remove ammonia, nitrite, and nitrate from the waste stream. Inadequate or incomplete denitrification may result in the discharge of nitrate and/or nitrite to the receiving stream. Discharges of nitrate plus nitrite in concentrations that exceed the Primary MCL would violate the Basin Plan narrative chemical constituents objective. Although the Discharger denitrifies the discharge, inadequate or incomplete denitrification creates the potential for nitrate and nitrite to be discharged and provides the basis for the discharge to have a reasonable potential to cause or contribute to an in-stream excursion above the Primary MCL. Therefore, the Central Valley Water Board finds the discharge has reasonable potential for nitrate plus nitrite and WQBELs are required.

The maximum effluent nitrite concentration was 1.87 mg/L, based on four samples collected between 22 December 2010 and 30 April 2013. The maximum upstream receiving water nitrite concentration was 0.43 mg/L based on four samples collected between 13 December 2008 and 30 April 2013. Therefore, nitrite in the discharge has a reasonable potential to cause or contribute to an in-stream excursion above the Primary MCL.

(c) **WQBELs.** This Order contains a final AMEL for nitrate plus nitrite of 10 mg/L (total as N), based on the Primary MCL. This effluent limitation is included in this Order to assure the treatment process adequately nitrifies and denitrifies the waste stream to protect the beneficial use of municipal and domestic supply. This Order also contains a final AMEL of 1 mg/L for nitrite based on the Primary MCL.

(d) **Plant Performance and Attainability.** The Facility was designed to provide nitrification and denitrification. The Central Valley Water Board concludes, therefore, that immediate compliance with these effluent limitations is feasible.

vi. **Pathogens**

(a) **WQO.** DPH has developed reclamation criteria, CCR, Division 4, Chapter 3 (Title 22), for the reuse of wastewater. Title 22 requires that for spray irrigation of food crops, parks, playgrounds, schoolyards, and other areas of similar public access, wastewater be adequately disinfected, oxidized, coagulated, clarified, and filtered, and that the effluent total coliform levels not exceed 2.2 MPN/100 mL as a 7-day median; 23 MPN/100 mL, not to be exceeded more than once in a 30-day period; and 240 MPN/100 mL, at any time.

Title 22 also requires that recycled water used as a source of water supply for non-restricted recreational impoundments be disinfected tertiary recycled water that has been subjected to conventional treatment. A non-restricted recreational impoundment is defined as *"…an impoundment of recycled water, in which no limitations are imposed on body-contact water recreational activities."* Title 22 is not directly applicable to surface waters; however, the Central Valley Water Board finds that it is appropriate to apply an equivalent level of treatment to that required by the DPH's reclamation criteria because the receiving water is used for irrigation of agricultural land and for contact recreation purposes. The stringent disinfection criteria of Title 22 are appropriate since the undiluted effluent

may be used for the irrigation of food crops and/or for body-contact water recreation. Coliform organisms are intended as an indicator of the effectiveness of the entire treatment train and the effectiveness of removing other pathogens.

(b) **RPA Results.** Raw domestic wastewater inherently contains human pathogens that threaten human health and life, and constitute a threatened pollution and nuisance under CWC Section 13050 if discharged untreated to the receiving water. Reasonable potential for pathogens therefore exists and WQBELs are required.

Federal regulations at 40 CFR §122.44(d)(1)(i) requires that, "*Limitations must control all pollutants or pollutant parameters (either conventional, nonconventional, or toxic pollutants) which the Director determines are or may be discharged at a level which will cause, have the reasonable potential to cause, or contribute to an excursion above any State water quality standard, including State narrative criteria for water quality*." For priority pollutants, the SIP dictates the procedures for conducting the RPA. Pathogens are not priority pollutants. Therefore, the Central Valley Water Board is not restricted to one particular RPA method. Due to the site-specific conditions of the discharge, the Central Valley Water Board has used professional judgment in determining the appropriate method for conducting the RPA for this non-priority pollutant constituent.

USEPA's September 2010 NPDES Permit Writer's Manual, page 6-30, states, "*State implementation procedures might allow, or even require, a permit writer to determine reasonable potential through a qualitative assessment process without using available facility-specific effluent monitoring data or when such data are not available…A permitting authority might also determine that WQBELs are required for specific pollutants for all facilities that exhibit certain operational or discharge characteristics (e.g., WQBELs for pathogens in all permits for POTWs discharging to contact recreational waters)."* USEPA's TSD also recommends that factors other than effluent data should be considered in the RPA, "*When determining whether or not a discharge causes, has the reasonable potential to cause, or contributes to an excursion of a numeric or narrative water quality criterion for individual toxicants or for toxicity, the regulatory authority can use a variety of factors and information where facility-specific effluent monitoring data are unavailable. These factors also should be considered with available effluent monitoring data*." (TSD, p. 50).

The beneficial uses of Deuel Drain include municipal and domestic supply, water contact recreation, and agricultural irrigation supply, and there is, at times, less than 20:1 dilution. To protect these beneficial uses, the Central Valley Water Board finds that the wastewater must be disinfected and adequately treated to prevent disease. Although the Discharger provides disinfection, inadequate or incomplete disinfection creates the potential for pathogens to be discharged. Therefore, the Central Valley Water Board finds the discharge has reasonable potential for pathogens and WQBELs are required.

(c) **WQBELs.** In accordance with the requirements of Title 22, this Order includes effluent limitations for total coliform organisms of

2.2 MPN/100 mL as a 7-day median; 23 MPN/100 mL, not to be exceeded more than once in a 30-day period; and 240 MPN/100 mL as an instantaneous maximum.

The tertiary treatment process, or equivalent, is capable of reliably treating wastewater to a turbidity level of 2 nephelometric turbidity units (NTU) as a daily average. Failure of the filtration system such that virus removal is impaired would normally result in increased particles in the effluent, which result in higher effluent turbidity. Turbidity has a major advantage for monitoring filter performance. Coliform testing, by comparison, is not conducted continuously and requires several hours, to days, to identify high coliform concentrations. Therefore, to ensure compliance with the DPH recommended Title 22 disinfection criteria, weekly average specifications are impracticable for turbidity. This Order includes operational specifications for turbidity of 0.2 NTU, not to be exceeded more than 5 percent of the time within a 24-hour period; and 0.5 NTU at any time.

This Order contains effluent limitations for total coliform organisms, BOD_5, and TSS, operating specifications for turbidity, and requires a tertiary level of treatment, or equivalent, necessary to protect the beneficial uses of the receiving water. The Central Valley Water Board has previously considered the factors in Water Code section 13241 in establishing these requirements.

Final WQBELs for BOD_5 and TSS are based on the technical capability of the tertiary process, which is necessary to protect the beneficial uses of the receiving water. BOD_5 is a measure of the amount of oxygen used in the biochemical oxidation of organic matter. The tertiary treatment standards for BOD_5 and TSS are indicators of the effectiveness of the tertiary treatment process. The principal design parameter for wastewater treatment plants is the daily BOD_5 and TSS loading rates and the corresponding removal rate of the system. The application of tertiary treatment processes results in the ability to achieve lower levels for BOD_5 and TSS than the secondary standards currently prescribed. Therefore, this Order requires AMELs for BOD_5 and TSS of 10 mg/L, which is technically based on the capability of a tertiary system. In addition to the average weekly and average monthly effluent limitations, a daily maximum effluent limitation for BOD_5 and TSS is included in the Order to ensure that the treatment works are not organically overloaded and operate in accordance with design capabilities.

(d) **Plant Performance and Attainability**. This Facility provides tertiary treatment using membrane filtration and UV disinfection. The Central Valley Water Board concludes, therefore, that immediate compliance with these effluent limitations is feasible.

vii. **pH**

(a) **WQO.** The Basin Plan includes a water quality objective for surface waters (except for Goose Lake) that the *"…pH shall not be depressed below 6.5 nor raised above 8.5."*

(b) **RPA Results.** Raw domestic wastewater inherently has variable pH. Additionally, some wastewater treatment processes can increase or

decrease wastewater pH which if not properly controlled, would violate the Basin Plan's numeric objective for pH in the receiving water. Therefore, reasonable potential exists for pH and WQBELs are required.

Federal regulations at 40 CFR §122.44(d)(1)(i) requires that, "*Limitations must control all pollutants or pollutant parameters (either conventional, nonconventional, or toxic pollutants) which the Director determines are or may be discharged at a level which will cause, have the reasonable potential to cause, or contribute to an excursion above any State water quality standard, including State narrative criteria for water quality*." For priority pollutants, the SIP dictates the procedures for conducting the RPA. pH is not a priority pollutant. Therefore, the Central Valley Water Board is not restricted to one particular RPA method. Due to the site-specific conditions of the discharge, the Central Valley Water Board has used professional judgment in determining the appropriate method for conducting the RPA for this non-priority pollutant constituent.

USEPA's September 2010 NPDES Permit Writer's Manual, page 6-30, states, "*State implementation procedures might allow, or even require, a permit writer to determine reasonable potential through a qualitative assessment process without using available facility-specific effluent monitoring data or when such data are not available…A permitting authority might also determine that WQBELs are required for specific pollutants for all facilities that exhibit certain operational or discharge characteristics (e.g., WQBELs for pathogens in all permits for POTWs discharging to contact recreational waters)*." USEPA's TSD also recommends that factors other than effluent data should be considered in the RPA, "*When determining whether or not a discharge causes, has the reasonable potential to cause, or contributes to an excursion of a numeric or narrative water quality criterion for individual toxicants or for toxicity, the regulatory authority can use a variety of factors and information where facility-specific effluent monitoring data are unavailable. These factors also should be considered with available effluent monitoring data*." (TSD, p. 50).

The Facility treats domestic wastewater. Based on 841 samples taken from 22 December 2010 to 30 April 2013, the maximum effluent pH reported was 8.33 and the minimum was 6.58. Although the Discharger has proper pH controls in place, the pH for the Facility's influent varies due to the nature of municipal sewage, which provides the basis for the discharge to have a reasonable potential to cause or contribute to an in-stream excursion above the Basin Plan's numeric objective for pH in the receiving water. Therefore, WQBELs for pH are required in this Order.

(c) **WQBELs.** Effluent limitations for pH of 6.5 as an instantaneous minimum and 8.5 as an instantaneous maximum are included in this Order based on protection of the Basin Plan objectives for pH.

(d) **Plant Performance and Attainability.** Analysis of the effluent data shows that the range of the pH concentration is 6.58 – 8.33 standard units, which is less than the applicable WQBELs. The Central Valley Water Board concludes, therefore, that immediate compliance with these effluent limitations is feasible.

viii. **Salinity**

(a) **WQO.** The Basin Plan contains a chemical constituent objective that incorporates state MCLs, contains a narrative objective, and contains numeric water quality objectives for electrical conductivity, total dissolved solids, sulfate, and chloride. In addition, USEPA has developed National Ambient Water Quality Criteria for chloride for the protection of freshwater aquatic life.

Table F-17. Salinity Water Quality Criteria/Objectives

Parameter	Secondary MCL[1]	Bay-Delta Plan	USEPA NAWQC	Effluent	
				Average[2]	Maximum
EC (µmhos/cm)	900, 1600, 2200	700/1000[3]	NA	2,244	3,550
TDS (mg/L)	500, 1000, 1500	NA	NA	1,595	1,780
Sulfate (mg/L)	250, 500, 600	NA	NA	202	254
Chloride (mg/L)	250, 500, 600	NA	230 4-day 860 1-hr	802	1,020

[1] The Secondary MCLs are stated as a recommended level, upper level, and a short-term maximum level.
[2] Maximum calendar annual average.
[3] The Bay-Delta Plan includes water quality objectives at three locations in the South Delta for electrical conductivity, which includes a 14-day running average electrical conductivity of 700 µmhos/cm from 1 April – 31 August and a 14-day running average electrical conductivity of 1,000 µmhos/cm from 1 September – 31 March. The State Water Board is developing revised salinity objectives for municipal dischargers.

(1) **Chloride.** The Secondary MCL for chloride is 250 mg/L, as a recommended level, 500 mg/L as an upper level, and 600 mg/L as a short-term maximum. USEPA Ambient Water Quality Criteria for chloride recommends acute (1-hour) and chronic (4-day) criteria for protection of freshwater aquatic life of 860 mg/L and 230 mg/L, respectively.

(2) **Electrical Conductivity.** The Secondary MCL for EC is 900 µmhos/cm as a recommended level, 1600 µmhos/cm as an upper level, and 2200 µmhos/cm as a short-term maximum.

The Bay-Delta Plan includes water quality objectives for EC for the South Delta in the vicinity of the discharge[1]. On 1 June 2011, the Superior Court for Sacramento County entered a judgment and peremptory writ of mandate in the matter of *City of Tracy v. State Water Resources Control Board* (Case No; 34-2009-8000-392-CU-WM-GDS), ruling that the South Delta salinity objectives shall not apply to the City of Tracy and other municipal dischargers pending reconsideration of the South Delta salinity objectives and adoption of a proper program of implementation that includes municipal dischargers. The State Water Board is currently considering new salinity and flow objectives in the South Delta that will address the Court Order.

[1] The Bay-Delta Plan includes water quality objectives at three locations in the South Delta for EC. The water quality objectives are a 14-day running average EC of 700 µmhos/cm from 1 April – 31 August and a 14-day running average EC of 1,000 µmhos/cm from 1 September – 31 March.

Therefore, at the time this Order was adopted the South Delta salinity objectives are not applicable to the Discharger.

(3) **Sulfate.** The secondary MCL for sulfate is 250 mg/L as a recommended level, 500 mg/L as an upper level, and 600 mg/L as a short-term maximum.

(4) **Total Dissolved Solids.** The Secondary MCL for TDS is 500 mg/L as a recommended level, 1000 mg/L as an upper level, and 1500 mg/L as a short-term maximum.

(b) **RPA Results**

(1) **Chloride.** Chloride concentrations in the effluent ranged from 511 mg/L to 1,020 mg/L, with an average of 662 mg/L. Background concentrations in Deuel Drain ranged from 52 mg/L to 1,520 mg/L, with an average of 663 mg/L, for five samples collected by the Discharger from 13 December 2008 through 30 April 2013. The applicable water quality objective to implement the Basin Plan's narrative chemical constituents objective for salinity is the Bay-Delta Plan south Delta salinity objectives, which are under development.

(2) **Electrical Conductivity.** A review of the Discharger's monitoring reports shows an average effluent EC of 1,912 µmhos/cm, with a range from 652 µmhos/cm to 3,550 µmhos/cm. The background receiving water EC averaged 2,994 µmhos/cm. The applicable water quality objective to implement the Basin Plan's narrative chemical constituents objective for salinity is the Bay-Delta Plan south Delta salinity objectives.

(3) **Sulfate.** Sulfate concentrations in the effluent ranged from 154 mg/L to 254 mg/L, with an average of 202 mg/L. Background concentrations in Deuel Drain ranged from 51 mg/L to 1,970 mg/L, with an average of 724 mg/L. The applicable water quality objective to implement the Basin Plan's narrative chemical constituents objective for salinity is the Bay-Delta Plan south Delta salinity objectives, which are under development.

(4) **Total Dissolved Solids.** The average TDS effluent concentration was 1,369 mg/L with concentrations ranging from 1,070 mg/L to 1,780 mg/L. The background receiving water TDS ranged from 94 mg/L to 3,700 mg/L, with an average of 1,914 mg/L. The applicable water quality objective to implement the Basin Plan's narrative chemical constituents objective for salinity is the Bay-Delta Plan south Delta salinity objectives, which are under development.

(c) **WQBELs.** The State Water Board is currently revising the Bay-Delta Plan to include salinity objectives that would be applicable to the discharge. Since the Bay-Delta Plan will include the applicable salinity objectives to conduct the RPA, until completion of the update, the RPA cannot be completed properly.

Order R5-2008-0164 established effluent limitations based on the Bay-Delta Plan objectives for electrical conductivity for the South Delta. Since these objectives are not currently applicable, as described above, this

Order discontinues the effluent limitations contained in Order R5-2008-0164.

The Discharger has a reverse osmosis water treatment plant which is used to reduce contaminants and minerals in the source water. The reverse osmosis plant was offline for major repairs between 1 May 2010 and 24 January 2012, and is taken offline for approximately 1 week every 6 months for routine maintenance. During periods when the reverse osmosis plant is offline for maintenance, source water and effluent salinity concentrations are much higher. Thus, limited data is available to calculate a performance-based effluent limitation to ensure that the Discharger maintains effluent salinity at current levels. Therefore, pending the Bay Delta Plan amendment, in order to ensure the Discharger implements measures to reduce the salinity in its discharge, this Order also requires the Discharger develop and implement a Salinity Minimization Plan.

ix. **Temperature**

(a) **WQO.** The Thermal Plan requires that, "*The maximum temperature shall not exceed the natural receiving water temperature by more than 20°F*."

(b) **RPA Results.** Treated domestic wastewater is an elevated temperature waste, which could cause or threaten to cause the receiving water temperature to exceed temperature objectives established in the Thermal Plan. Therefore, reasonable potential exists for temperature and WQBELs are required.

Federal regulations at 40 CFR §122.44(d)(1)(i) requires that, "*Limitations must control all pollutants or pollutant parameters (either conventional, nonconventional, or toxic pollutants) which the Director determines are or may be discharged at a level which will cause, have the reasonable potential to cause, or contribute to an excursion above any State water quality standard, including State narrative criteria for water quality*." For priority pollutants, the SIP dictates the procedures for conducting the RPA. Temperature is not a priority pollutant. Therefore, the Central Valley Water Board is not restricted to one particular RPA method. Due to the site-specific conditions of the discharge, the Central Valley Water Board has used professional judgment in determining the appropriate method for conducting the RPA for this non-priority pollutant constituent.

USEPA's September 2010 NPDES Permit Writer's Manual, page 6-30, states, "*State implementation procedures might allow, or even require, a permit writer to determine reasonable potential through a qualitative assessment process without using available facility-specific effluent monitoring data or when such data are not available…A permitting authority might also determine that WQBELs are required for specific pollutants for all facilities that exhibit certain operational or discharge characteristics (e.g., WQBELs for pathogens in all permits for POTWs discharging to contact recreational waters)*." USEPA's TSD also recommends that factors other than effluent data should be considered in the RPA, "*When determining whether or not a discharge causes, has the reasonable potential to cause, or contributes to an excursion of a numeric or narrative water quality criterion for individual toxicants or for toxicity, the regulatory authority can use a variety of factors and information where facility-specific effluent monitoring data are unavailable. These factors also*

should be considered with available effluent monitoring data." (TSD, p. 50).

The Facility treats domestic wastewater, which is an elevated temperature waste. This provides the basis for the discharge to have a reasonable potential to cause or contribute to an excursion above Thermal Plan requirements.

(c) **WQBELs.** To ensure compliance with the Thermal Plan, an effluent limitation for temperature is included in this Order.

(d) **Plant Performance and Attainability.** Analysis of effluent data shows that the maximum effluent increase in temperature from the receiving water was 18ºF on 17 November 2009. The Central Valley Water Board thus concludes that immediate compliance with these effluent limitations is feasible.

4. WQBEL Calculations

a. This Order includes WQBELs for ammonia, BOD_5, copper, cyanide, diazinon and chlorpyrifos, methylmercury, nitrite, nitrate plus nitrite, pH, total coliform organisms, and TSS. The general methodology for calculating WQBELs based on the different criteria/objectives is described in subsections IV.C.4.b through e, below. See Attachment H for the WQBEL calculations.

b. **Effluent Concentration Allowance.** For each water quality criterion/objective, the ECA is calculated using the following steady-state mass balance equation from Section 1.4 of the SIP:

$$ECA = C + D(C - B) \quad \text{where } C>B, \text{ and}$$
$$ECA = C \quad \text{where } C \leq B$$

where:

ECA = effluent concentration allowance
D = dilution credit
C = the priority pollutant criterion/objective
B = the ambient background concentration.

According to the SIP, the ambient background concentration (B) in the equation above shall be the observed maximum with the exception that an ECA calculated from a priority pollutant criterion/objective that is intended to protect human health from carcinogenic effects shall use the arithmetic mean concentration of the ambient background samples. For ECAs based on MCLs, which implement the Basin Plan's chemical constituents objective and are applied as annual averages, an arithmetic mean is also used for B due to the long-term basis of the criteria.

c. **Basin Plan Objectives and MCLs.** For WQBELs based on site-specific numeric Basin Plan objectives or MCLs, the effluent limitations are applied directly as the ECA as either an MDEL, AMEL, or average annual effluent limitations, depending on the averaging period of the objective.

d. **Aquatic Toxicity Criteria.** WQBELs based on acute and chronic aquatic toxicity criteria are calculated in accordance with Section 1.4 of the SIP. The ECAs are converted to equivalent long-term averages (i.e., LTA_{acute} and $LTA_{chronic}$) using

statistical multipliers and the lowest LTA is used to calculate the AMEL and MDEL using additional statistical multipliers.

e. **Human Health Criteria.** WQBELs based on human health criteria, are also calculated in accordance with Section 1.4 of the SIP. The ECAs are set equal to the AMEL and a statistical multiplier was used to calculate the MDEL.

$$AMEL = mult_{AMEL}\left[\min\left(\overbrace{M_A ECA_{acute}}^{LTA_{acute}}, M_C ECA_{chronic}\right)\right]$$

$$MDEL = mult_{MDEL}\left[\min\left(M_A ECA_{acute}, \underbrace{M_C ECA_{chronic}}_{LTA_{chronic}}\right)\right]$$

$$MDEL_{HH} = \left(\frac{mult_{MDEL}}{mult_{AMEL}}\right) AMEL_{HH}$$

where:
$mult_{AMEL}$ = statistical multiplier converting minimum LTA to AMEL
$mult_{MDEL}$ = statistical multiplier converting minimum LTA to MDEL
M_A = statistical multiplier converting acute ECA to LTA_{acute}
M_C = statistical multiplier converting chronic ECA to $LTA_{chronic}$

Summary of Water Quality-Based Effluent Limitations
Discharge Point 001

Table F-18. Summary of Water Quality-Based Effluent Limitations

Parameter	Units	Effluent Limitations				
		Average Monthly	Average Weekly	Maximum Daily	Instantaneous Minimum	Instantaneous Maximum
Conventional Pollutants						
Biochemical Oxygen Demand (5-day at 25°C)	mg/L	10	15	20	--	--
	lbs/day[1]	52	78	103	--	--
pH	standard units	--	--	--	6.5	8.5
Total Suspended Solids	mg/L	10	15	20	--	--
	lbs/day[1]	52	78	103	--	--
Priority Pollutants						
Copper, Total Recoverable	µg/L	25	--	10	--	--
Cyanide, Total (as CN)	µg/L	4.3	--	8.5	--	--
Non-Conventional Pollutants						
Ammonia Nitrogen, Total (as N)	mg/L	0.7	--	2.2	--	--
	lbs/day[1]	3.6	--	11.4	--	--

Parameter	Units	Effluent Limitations				
		Average Monthly	Average Weekly	Maximum Daily	Instantaneous Minimum	Instantaneous Maximum
Diazinon and Chlorpyrifos	µg/L	[2]	--	[3]	--	--
Methylmercury	grams/year	0.021[4]	--	--	--	--
Nitrite Nitrogen, Total (as N)	mg/L	1.0	--	--	--	--
Nitrate plus Nitrite (as N)	mg/L	10	--	--	--	--
Temperature	ºF	--	--	20[5]	--	--
Total Coliform Organisms	MPN/100 mL	--	2.2[6]	23[7]	--	240

[1] Based on an average dry weather flow of 0.62 MGD.

[2] Average Monthly Effluent Limitation

$$S_{avg} = \frac{C_{D_avg}}{0.079} + \frac{C_{C_avg}}{0.012} \leq 1.0$$

$C_{D\ avg}$ = average monthly diazinon effluent concentration in µg/L
$C_{C\ avg}$ = average monthly chlorpyrifos effluent concentration in µg/L

[3] Maximum Daily Effluent Limitation

$$S_{max} = \frac{C_{D_max}}{0.16} + \frac{C_{C_max}}{0.025} \leq 1.0$$

$C_{D\ avg}$ = maximum daily diazinon effluent concentration in µg/L
$C_{C\ avg}$ = maximum daily chlorpyrifos effluent concentration in µg/L

[4] The total calendar annual load of methylmercury shall not exceed 0.021 grams.

[5] The maximum temperature of the discharge shall not exceed the natural receiving water temperature by more than 20ºF.

[6] Applied as a 7-day median effluent limitation.

[7] Not to be exceeded more than once in any 30-day period.

5. Whole Effluent Toxicity (WET)

For compliance with the Basin Plan's narrative toxicity objective, this Order requires the Discharger to conduct whole effluent toxicity testing for acute and chronic toxicity, as specified in the Monitoring and Reporting Program (Attachment E section V.). This Order also contains effluent limitations for acute toxicity and requires the Discharger to implement best management practices to investigate the causes of, and identify corrective actions to reduce or eliminate effluent toxicity.

a. **Acute Aquatic Toxicity.** The Basin Plan contains a narrative toxicity objective that states, "*All waters shall be maintained free of toxic substances in concentrations that produce detrimental physiological responses in human, plant, animal, or aquatic life*." (Basin Plan at page III-8.00. The Basin Plan also states that, "…*effluent limits based upon acute biotoxicity tests of effluents will be prescribed where appropriate*…".

For priority pollutants, the SIP dictates the procedures for conducting the RPA. Acute toxicity is not a priority pollutant. Therefore, the Central Valley Water Board is not restricted to one particular RPA method. Acute whole effluent toxicity is not a priority pollutant. Therefore, due to the site-specific conditions of the discharge, the Central Valley Water Board has used professional judgment in determining the appropriate method for conducting the RPA. USEPA's September 2010 NPDES

Permit Writer's Manual, page 6-30, states, "*State implementation procedures might allow, or even require, a permit writer to determine reasonable potential through a qualitative assessment process without using available facility-specific effluent monitoring data or when such data are not available…A permitting authority might also determine that WQBELs are required for specific pollutants for all facilities that exhibit certain operational or discharge characteristics (e.g., WQBELs for pathogens in all permits for POTWs discharging to contact recreational waters).*" Although the discharge has been consistently in compliance with the acute effluent limitations, the Facility is treats domestic wastewater containing ammonia and other acutely toxic pollutants. Acute toxicity effluent limits are required to ensure compliance with the Basin Plan's narrative toxicity objective.

USEPA Region 9 provided guidance for the development of acute toxicity effluent limitations in the absence of numeric water quality objectives for toxicity in its document titled "Guidance for NPDES Permit Issuance", dated February 1994. In section B.2. "Toxicity Requirements" (pgs. 14-15) it states that, "*In the absence of specific numeric water quality objectives for acute and chronic toxicity, the narrative criterion 'no toxics in toxic amounts' applies. Achievement of the narrative criterion, as applied herein, means that ambient waters shall not demonstrate for acute toxicity: 1) less than 90% survival, 50% of the time, based on the monthly median, or 2) less than 70% survival, 10% of the time, based on any monthly median. For chronic toxicity, ambient waters shall not demonstrate a test result of greater than 1 TUc*." Consistent with Order No. R5-2008-0164, effluent limitations for acute toxicity have been included in this Order as follows:

Acute Toxicity. Survival of aquatic organisms in 96-hour bioassays of undiluted waste shall be no less than:

Minimum for any one bioassay ---------- 70%
Median for any three consecutive bioassays ---------- 90%

b. **Chronic Aquatic Toxicity.** The Basin Plan contains a narrative toxicity objective that states, "*All waters shall be maintained free of toxic substances in concentrations that produce detrimental physiological responses in human, plant, animal, or aquatic life*." (Basin Plan at page III-8). As shown in the table below, based on chronic WET testing performed by the Discharger from 16 November 2010 through 4 March 2013, the discharge has reasonable potential to cause or contribute to an in-stream excursion above of the Basin Plan's narrative toxicity objective.

Table F-19. Whole Effluent Chronic Toxicity Testing Results

Date	Fathead Minnow *Pimephales promelas*		Water Flea *Ceriodaphnia dubia*		Green Algae *Selenastrum capricornutum*
	Survival (TUc)	Growth (TUc)	Survival (TUc)	Reproduction (TUc)	Growth (TUc)
11 January 2011	1	1	4	4	4
26 April 2011	2	1	1	1	8
3 April 2012	1	1	1	1	1.33
2 May 2012	--	--	--	--	9
16 May 2012	--	--	--	--	9
30 May 2012	--	--	--	--	>8
13 June 2012	--	--	--	--	4
10 July 2012	1	1	4	1	2

Date	Fathead Minnow *Pimephales promelas*		Water Flea *Ceriodaphnia dubia*		Green Algae *Selenastrum capricornutum*
	Survival (TUc)	Growth (TUc)	Survival (TUc)	Reproduction (TUc)	Growth (TUc)
13 August 2012	--	--	1	--	--
26 August 2012	--	--	--	1	--
10 September 2012	--	--	1	1	--
24 September 2012	--	--	1	--	--
8 October 2012	1	1	1	1	1
21 January 2013	--	--	1	1.33	--
18 February 2013	--	--	2	1	--
4 March 2013	1	1	1	1	1

No dilution has been granted for the chronic condition. Therefore, chronic toxicity testing results exceeding 1 chronic toxicity unit (TUc) demonstrates the discharge has a reasonable potential to cause or contribute to an exceedance of the Basin Plan's narrative toxicity objective.

The Monitoring and Reporting Program of this Order requires quarterly chronic WET monitoring for demonstration of compliance with the narrative toxicity objective. In addition to WET monitoring, the Special Provision in section VI.C.2.a includes a numeric toxicity monitoring trigger, requirements for accelerated monitoring, and requirements for Toxicity Reduction Evaluation (TRE) initiation if toxicity is demonstrated.

Numeric chronic WET effluent limitations have not been included in this Order. The SIP contains implementation gaps regarding the appropriate form and implementation of chronic toxicity limits. This has resulted in the petitioning of a NPDES permit in the Los Angeles Region[1] that contained numeric chronic toxicity effluent limitations. To address the petition, the State Water Board adopted WQO 2003-012 directing its staff to revise the toxicity control provisions in the SIP. The State Water Board states the following in WQO 2003-012, "*In reviewing this petition and receiving comments from numerous interested persons on the propriety of including numeric effluent limitations for chronic toxicity in NPDES permits for publicly-owned treatment works that discharge to inland waters, we have determined that this issue should be considered in a regulatory setting, in order to allow for full public discussion and deliberation. We intend to modify the SIP to specifically address the issue. We anticipate that review will occur within the next year. We therefore decline to make a determination here regarding the propriety of the final numeric effluent limitations for chronic toxicity contained in these permits.*" The process to revise the SIP is currently underway. Proposed changes include clarifying the appropriate form of effluent toxicity limits in NPDES permits and general expansion and standardization of toxicity control implementation related to the NPDES permitting process. Since the toxicity control provisions in the SIP are under revision it is infeasible to develop numeric effluent limitations for chronic toxicity. Therefore, this Order requires that the Discharger meet best management

[1] In the Matter of the Review of Own Motion of Waste Discharge Requirements Order Nos. R4-2002-0121 [NPDES No. CA0054011] and R4-2002-0123 [NPDES NO. CA0055119] and Time Schedule Order Nos. R4-2002-0122 and R4-2002-0124 for Los Coyotes and Long Beach Wastewater Reclamation Plants Issued by the California Regional Water Quality Control Board, Los Angeles Region SWRCB/OCC FILES A-1496 AND 1496(a)

practices for compliance with the Basin Plan's narrative toxicity objective, as allowed under 40 CFR 122.44(k).

To ensure compliance with the Basin Plan's narrative toxicity objective, the Discharger is required to conduct chronic WET testing, as specified in the Monitoring and Reporting Program (Attachment E section V.). Furthermore, the Special Provision contained at VI.C.2.a. of this Order requires the Discharger to investigate the causes of, and identify and implement corrective actions to reduce or eliminate effluent toxicity. If the discharge demonstrates toxicity exceeding the numeric toxicity monitoring trigger, the Discharger is required to initiate a Toxicity Reduction Evaluation (TRE) in accordance with an approved TRE workplan. The numeric toxicity monitoring trigger is not an effluent limitation; it is the toxicity threshold at which the Discharger is required to perform accelerated chronic toxicity monitoring, as well as, the threshold to initiate a TRE if effluent toxicity has been demonstrated.

D. Final Effluent Limitation Considerations

1. Mass-based Effluent Limitations

40 CFR 122.45(f)(1) requires effluent limitations be expressed in terms of mass, with some exceptions, and 40 CFR 122.45(f)(2) allows pollutants that are limited in terms of mass to additionally be limited in terms of other units of measurement. This Order includes effluent limitations expressed in terms of mass and concentration. In addition, pursuant to the exceptions to mass limitations provided in 40 CFR 122.45(f)(1), some effluent limitations are not expressed in terms of mass, such as pH and temperature, and when the applicable standards are expressed in terms of concentration (e.g., CTR criteria and MCLs) and mass limitations are not necessary to protect the beneficial uses of the receiving water.

Mass-based effluent limitations have been established in this Order for ammonia, BOD_5, and TSS because they are oxygen demanding substances. Except for the pollutants listed above, mass-based effluent limitations are not included in this Order for pollutant parameters for which effluent limitations are based on water quality objectives and criteria that are concentration-based.

Mass-based effluent limitations were calculated based upon the design flow (average dry weather flow) of 0.62 MGD permitted in section IV.A.1.h of this Order.

2. Averaging Periods for Effluent Limitations

40 CFR 122.45 (d) requires average weekly and average monthly discharge limitations for POTWs unless impracticable. However, for toxic pollutants and pollutant parameters in water quality permitting, USEPA recommends the use of a maximum daily effluent limitation in lieu of average weekly effluent limitations for two reasons. "*First, the basis for the 7-day average for POTWs derives from the secondary treatment requirements. This basis is not related to the need for assuring achievement of water quality standards. Second, a 7-day average, which could comprise up to seven or more daily samples, could average out peak toxic concentrations and therefore the discharge's potential for causing acute toxic effects would be missed.*" (TSD, pg. 96) This Order uses MDELs in lieu of AWELs for ammonia, copper, cyanide, and diazinon and chlorpyrifos as recommended by the TSD for the achievement of water quality standards and for the protection of the beneficial uses of the receiving stream. Furthermore, for BOD_5, pH, and TSS, AWELs have been replaced or supplemented with effluent limitations utilizing

shorter averaging periods. The rationale for using shorter averaging periods for these constituents is discussed in section IV.C.3 of this Fact Sheet.

3. Satisfaction of Anti-Backsliding Requirements

The Clean Water Act specifies that a revised permit may not include effluent limitations that are less stringent than the previous permit unless a less stringent limitation is justified based on exceptions to the anti-backsliding provisions contained in Clean Water Act sections 402(o) or 303(d)(4), or, where applicable, 40 CFR 122.44(l).

The effluent limitations in this Order are at least as stringent as the effluent limitations in the previous Order, with the exception of effluent limitations for bromoform, chlorodibromomethane, dichlorobromomethane, electrical conductivity, nitrate, and chlorine residual. The effluent limitations for these pollutants are less stringent than those in Order R5-2008-0164. This relaxation of effluent limitations is consistent with the anti-backsliding requirements of the CWA and federal regulations.

a. **CWA section 402(o)(1) and 303(d)(4).** CWA section 402(o)(1) prohibits the establishment of less stringent WQBELs "*except in compliance with Section 303(d)(4)*." CWA section 3030(d)(4) has two parts: paragraph (A) which applies to nonattainment waters and paragraph (B) which applies to attainment waters.

i. For waters where standards are not attained, CWA section 304(d)(4)(A) specifies that any effluent limit based on a TMDL or other WLA may be revised only if the cumulative effect of all such revised effluent limits based on such TMDLs or WLAs will assure the attainment of such water quality standards.

Deuel Drain is considered a nonattainment water for electrical conductivity because the receiving water is listed as impaired on the 303(d) list for electrical conductivity. A TMDL and WLA for electrical conductivity has not been adopted. As discussed in section IV.C.3.c.viii of this Fact Sheet, the Bay-Delta Plan objectives for electrical conductivity for the South Delta, on which the effluent limitations in Order R5-2008-0164 were based, have been determined to not be applicable pending reconsideration of the South Delta salinity objectives and adoption of a proper program of implementation that includes municipal dischargers. Therefore, this Order does not retain the effluent limitations for electrical conductivity based on the Bay-Delta Plan objectives. Pending an amendment to the Bay-Delta Plan, this Order requires the Discharger to implement a Salinity Evaluation and Minimization Plan to ensure adequate measures are developed and implemented to reduce the discharge of salinity to Deuel Drain. Therefore, the removal of the WQBELs for electrical conductivity will not result in an increase in salinity concentrations or loading, a decrease in the level of treatment or control, or a reduction of water quality. Thus, removal of the effluent limitations for electrical conductivity from Order R5-2008-0164 meets the exception in CWA section 303(d)(4)(A).

ii. For attainment waters, CWA section 303(d)(4)(B) specifies that a limitation based on a water quality standard may be relaxed where the action is consistent with the antidegradation policy.

Deuel Drain is considered an attainment water for bromoform, chlorodibromomethane, dichlorobromomethane, nitrate, and chlorine residual because the receiving water is not listed as impaired on the 303(d) list for these

constituents[1]. As discussed in section IV.D.4, below, removal of the effluent limits complies with federal and state antidegradation requirements. Thus, removal of the effluent limitations for bromoform, chlorodibromomethane, dichlorobromomethane, nitrate, and chlorine residual from Order R5-2008-0164 meets the exception in CWA section 303(d)(4)(B).

b. **CWA section 402(o)(2).** CWA section 402(o)(2) provides several exceptions to the anti-backsliding regulations. CWA 402(o)(2)(B)(i) allows a renewed, reissued, or modified permit to contain a less stringent effluent limitation for a pollutant if information is available which was not available at the time of permit issuance (other than revised regulations, guidance, or test methods) and which would have justified the application of a less stringent effluent limitation at the time of permit issuance.

As described further in section IV.C.3.a of this Fact Sheet, updated information that was not available at the time Order R5-2008-0164 was issued indicates that bromoform, chlorodibromomethane, dichlorobromomethane, and chlorine residual do not exhibit reasonable potential to cause or contribute to an exceedance of water quality objectives in the receiving water. The updated information that supports the relaxation of effluent limitations for these constituents includes the following:

i. **Bromoform.** Bromoform is a chlorine disinfection byproduct. The Discharger converted from chlorine disinfection to UV disinfection in October 2010. Effluent monitoring data collected between 22 December 2010 and 30 April 2013 and upstream receiving water data collected between 13 December 2008 and 30 April 2013 indicates that bromoform in the discharge does not demonstrate reasonable potential to cause or contribute to an exceedance of the CTR human health criteria.

ii. **Chlorodibromomethane.** Chlorodibromomethane is a chlorine disinfection byproduct. The Discharger converted from chlorine disinfection to UV disinfection in October 2010. Effluent monitoring data collected between 22 December 2010 and 30 April 2013 and upstream receiving water data collected between 13 December 2008 and 30 April 2013 indicates that chlorodibromomethane in the discharge does not demonstrate reasonable potential to cause or contribute to an exceedance of the CTR criteria for the protection of human health.

iii. **Dichlorobromomethane.** Dichlorobromomethane is a chlorine disinfection byproduct. The Discharger converted from chlorine disinfection to UV disinfection in October 2010. Effluent monitoring data collected between 22 December 2010 and 30 April 2013 and upstream receiving water data collected between 13 December 2008 and 30 April 2013 indicates that dichlorobromomethane in the discharge does not demonstrate reasonable potential to cause or contribute to an exceedance of the CTR criteria for the protection of human health.

iv. **Chlorine Residual.** Effluent monitoring data collected between 22 December 2010 and 30 April 2013 indicates that chlorine residual in the discharge does not demonstrate reasonable potential to cause or contribute to an exceedance of the Basin Plan's narrative toxicity objective. Additionally The

[1] "*The exceptions in Section 303(d)(4) address both waters in attainment with water quality standards and those not in attainment, i.e. waters on the section 303(d) impaired waters list*." State Water Board Order WQ 2008-0006, Berry Petroleum Company, Poso Creek/McVan Facility.

Discharger converted from chlorine disinfection to UV disinfection in October 2010 and now only uses chlorine when cleaning the membrane filters.

Thus, removal and relaxation of the effluent limitations for bromoform, chlorodibromomethane, dichlorobromomethane, and chlorine residual from Order R5-2008-0164 is in accordance with CWA section 402(o)(2)(B)(i), which allows for the removal or relaxation of effluent limitations based on information that was not available at the time of permit issuance.

c. **Removal of Discharge Points 003 and 004**. Industrial storm water commingled with groundwater may be discharged to Deuel Drain at Discharge Points 003 and 004. Based on the presence of year-round non-storm water discharges and due to polluted groundwater at the Facility, Order R5-2008-0164 regulated these discharges rather than the State Water Board's General Industrial Storm Water Permit. Although there is no groundwater treatment system, Order R5-2008-0164 included technology-based effluent limitations for volatile organic constituents (VOCs) based on best professional judgment (BPJ).

All industrial connections to the drains for Discharge Point 003 have been removed. However, the storm water collection system for Discharge Point 003 is unlined and groundwater continues to be discharged year-round. The Discharger has indicated that, flooding of basements occurs if the storm water system is not pumped regularly to Deuel Drain. The storm water system that discharges at 003 is not located in the area of the burn pit groundwater plume.

Monitoring data for Discharge Point 003 for the constituents of concern are shown in the table below. Based on the data, although some detections are present, it does not appear that polluted groundwater is accumulating in the storm water system discharged at Discharge Point 003. The maximum effluent concentrations are below background water quality and well below concentrations seen in the burn pit groundwater plume.

Table F-20. Summary of Monitoring Data for Constituents of Concern at Discharge Point 003

Parameter	MEC EFF-003 (µg/L)	# Detected/ Total Samples	Maximum Plume Concentration (µg/L)	Maximum Background Concentration (µg/L)
Tetrachloroethylene	0.5	9/52	47	1.2
Trichloroethylene	0.7	8/52	20	1.4
cis-1,2-Dichloroethylene	0.2 (j-flag)	12/52	90	1.1

A portion of the storm water system that can discharge at Discharge Point 004 is located in the burn pit area. The Discharger has completed lining of the storm water drains to the extent possible, and all industrial connections to the storm water drains have been removed. There are several below ground storm water drains beneath the prison, and most of them have been lined. However, there are parts of the storm water drains that are located in areas of the prison that cannot be accessed due to security concerns (e.g., underneath the prison perimeter). During the term of the Order R5-2008-0164, the Discharger did not discharge from Discharge Point 004 and diverted all flows to a clay-lined storage pond.

Discharges at Discharge Points 003 and 004 are from storm water collection systems. There is no treatment for the storm water or non-storm water discharges. The Discharger has removed all industrial connections to these discharge points, no longer discharges from Discharge Point 004, and based on available effluent data

for Discharge Point 003 there is no reasonable potential for the constituents of concern. Thus, monitoring and effluent limitations for these discharge points have been not been retained in this Order. As discussed further in section II.A, Discharge Points 003 and 004 are now covered under the State Water Board's General Permit for Phase II MS4's.

4. Antidegradation Policies

This Order does not allow for an increase in flow or mass of pollutants to the receiving water. Therefore, a complete antidegradation analysis is not necessary. The Order requires compliance with applicable federal technology-based standards and with WQBELs where the discharge could have the reasonable potential to cause or contribute to an exceedance of water quality standards. The permitted discharge is consistent with the antidegradation provisions of 40 CFR 131.12 and State Water Board Resolution No. 68-16. Compliance with these requirements will result in the use of best practicable treatment or control of the discharge. The impact on existing water quality will be insignificant.

This Order removes existing effluent limitations for constituents in which updated monitoring data demonstrates that the effluent does not cause or contribute to an exceedance of the applicable water quality criteria or objectives in the receiving water (i.e., bromoform, chlorodibromomethane, dichlorobromomethane, and chlorine residual). This Order replaces the effluent limitation for nitrate with an equivalent effluent limitation for nitrate plus nitrite. Although this Order discontinues the effluent limitations for electrical conductivity, this Order requires the Discharger to implement a Salinity Evaluation and Minimization Plan to ensure the Discharger implements measures to reduce the salinity in its discharge. Therefore, the removal of the WQBELs for these constituents will not result in an increase in pollutant concentration or loading, a decrease in the level of treatment or control, or a reduction of water quality. Therefore, the Central Valley Water Board finds that the removal of effluent limitations for bromoform, chlorodibromomethane, dichlorobromomethane, electrical conductivity, nitrate, and chlorine residual does not result in an allowed increase in pollutants or any additional degradation of the receiving water. Thus, the removal of effluent limitations is consistent with the antidegradation provisions of 40 CFR 131.12 and State Water Board Resolution No. 68-16.

5. Stringency of Requirements for Individual Pollutants

This Order contains both technology-based effluent limitations and WQBELs for individual pollutants. The technology-based effluent limitations consist of restrictions on flow, BOD_5, and TSS. Restrictions on these pollutants are discussed in section IV.C of this Fact Sheet. This Order's technology-based pollutant restrictions implement the minimum, applicable federal technology-based requirements. In addition, this Order contains effluent limitations more stringent than the minimum, federal technology-based requirements that are necessary to meet water quality standards. These limitations are not more stringent than required by the CWA.

WQBELs have been derived to implement water quality objectives that protect beneficial uses. Both the beneficial uses and the water quality objectives have been approved pursuant to federal law and are the applicable federal water quality standards. To the extent that toxic pollutant WQBELs were derived from the CTR, the CTR is the applicable standard pursuant to 40 CFR section 131.38. The procedures for calculating the individual WQBELs for priority pollutants are based on the CTR implemented by the SIP, which was approved by U.S. EPA on 18 May 2000. All beneficial uses and water quality objectives contained in the Basin Plan were approved under state law and

submitted to and approved by U.S. EPA prior to 30 May 2000. Any water quality objectives and beneficial uses submitted to U.S. EPA prior to 30 May 2000, but not approved by U.S. EPA before that date, are nonetheless "applicable water quality standards for purposes of the CWA" pursuant to 40 CFR section 131.21(c)(1). Collectively, this Order's restrictions on individual pollutants are no more stringent than required to implement the requirements of the CWA.

Summary of Final Effluent Limitations
Discharge Point 001

Table F-21. Summary of Final Effluent Limitations

Parameter	Units	Effluent Limitations					Basis[1]
		Average Monthly	Average Weekly	Maximum Daily	Instantaneous Minimum	Instantaneous Maximum	
Average Dry Weather Flow	MGD	0.62	--	--	--	--	DC
Conventional Pollutants							
Biochemical Oxygen Demand (5-day @ 20ºC)	mg/L	10	15	20	--	--	TTC, CFR
	lbs/day[2]	52	78	103	--	--	
	% Removal	85	--	--	--	--	
pH	standard units	--	--	--	6.5	8.5	BP
Total Suspended Solids	mg/L	10	15	20	--	--	TTC, CFR
	lbs/day[2]	52	78	103	--	--	
	% Removal	85	--	--	--	--	
Priority Pollutants							
Copper, Total Recoverable	µg/L	25	--	10	--	--	CTR, BP
Cyanide, Total (as CN)	µg/L	4.3	--	8.5	--	--	CTR
Non-Conventional Pollutants							
Ammonia Nitrogen, Total (as N)	mg/L	0.7	--	2.2	--	--	NAWQC
	lbs/day[2]	3.6	--	11.4	--	--	
Diazinon and Chlorpyrifos	µg/L	[3]	--	[4]	--	--	TMDL
Methylmercury	gram/year	0.021[5]	--	--	--	--	TMDL
Nitrite Nitrogen, Total (as N)	mg/L	1.0	--	--	--	--	MCL
Nitrate plus Nitrite (as N)	mg/L	10	--	--	--	--	MCL
Temperature	ºF	--	--	--	--	20[6]	TP
Total Coliform Organisms	MPN/100 mL	--	2.2[7]	23[8]	--	240	Title 22
Acute Toxicity	% Survival	--	--	70[9]/90[10]	--	--	BP
Chronic Toxicity	TUc	--	--	[11]	--	--	BP

Parameter	Units	Effluent Limitations					Basis[1]
		Average Monthly	Average Weekly	Maximum Daily	Instantaneous Minimum	Instantaneous Maximum	

[1] DC – Based on the design capacity of the Facility.
TTC - Based on tertiary treatment capability. These effluent limitations reflect the capability of a properly operated tertiary treatment plant.
CFR – Based on secondary treatment standards contained in 40 CFR Part 133.
BP – Based on water quality objectives contained in the Basin Plan.
CTR – Based on water quality criteria contained in the California Toxics Rule and applied as specified in the SIP.
NAWQC – Based on USEPA's National Ambient Water Quality Criteria for the protection of freshwater aquatic life.
TMDL – Based on the applicable TMDL.
MCL – Based on the Primary Maximum Contaminant Level.
TP – Based on the Thermal Plan.
Title 22 – Based on CA Department of Public Health Reclamation Criteria, CCR, Division 4, Chapter 3 (Title 22).

[2] Based on a design average dry weather flow of 0.62 MGD.

[3] Average Monthly Effluent Limitation

$$S_{avg} = \frac{C_{D_avg}}{0.079} + \frac{C_{C_avg}}{0.012} \leq 1.0$$

$C_{D\ avg}$ = average monthly diazinon effluent concentration in µg/L
$C_{C\ avg}$ = average monthly chlorpyrifos effluent concentration in µg/L

[4] Maximum Daily Effluent Limitation

$$S_{max} = \frac{C_{D_max}}{0.16} + \frac{C_{C_max}}{0.025} \leq 1.0$$

$C_{D\ avg}$ = maximum daily diazinon effluent concentration in µg/L
$C_{C\ avg}$ = maximum daily chlorpyrifos effluent concentration in µg/L

[5] The total calendar annual load of methylmercury shall not exceed 0.021 grams.

[6] The maximum temperature of the discharge shall not exceed the natural receiving water temperature by more than 20ºF.

[7] Applied as a 7-day median effluent limitation.

[8] Not to be exceeded more than once in any 30-day period.

[9] 70% minimum of any one bioassay.

[10] 90% median for any three consecutive bioassays.

[11] There shall be no chronic toxicity in the effluent discharge.

E. Interim Effluent Limitations

1. **Compliance Schedule for Methylmercury**. This Order contains a new final effluent limitation for methylmercury based on the new objective that became effective on 20 October 2011. The Discharger has complied with the application requirements in paragraph 4 of the State Water Board's Compliance Schedule Policy, and the Discharger's application demonstrates the need for additional time to implement actions to comply with the new limitations, as described below. Therefore, a compliance schedule for compliance with the effluent limitations for methylmercury is established in this Order.

   A compliance schedule is necessary because the Discharger must implement actions, including a Phase 1 Methylmercury Control Study and possible upgrades to the facility to comply with final effluent limitations.

   The Discharger has made diligent efforts to quantify pollutant levels in the discharge and the sources of the pollutant in the waste stream, and the results of those efforts.

The compliance schedule is as short as possible. The Central Valley Water Board will use the Phase 1 Control Studies' results and other information to consider amendments to the Delta Mercury Control Program during the Phase 1 Delta Mercury Control Program Review. Therefore, at this time it is uncertain what measures must be taken to consistently comply with the waste load allocation for methylmercury. The interim effluent limits and final compliance date may be modified at the completion of Phase 1.

Interim performance-based limitations have been established in this Order in accordance with the Delta Mercury Control Program. The interim limitations were determined as described in section IV.E.2., below, and are in effect through until the final limitations take effect.

2. **Interim Limits for Total Mercury.** During Phase 1, the Delta Mercury Control Program requires POTWs to limit their discharges of inorganic (total) mercury to facility performance-based levels. The interim inorganic (total) mercury effluent mass limit is to be derived using current, representative data and shall not exceed the 99.9th percentile of 12-month running effluent inorganic (total) mercury loads (lbs/year). At the end of Phase 1, the interim inorganic (total) mercury mass limit will be re-evaluated and modified as appropriate.

   The interim limitations for total mercury in this Order are based on the current treatment plant performance. With 10 or more sampling data points, sampling and laboratory variability is accounted for by establishing interim limits that are based on normally distributed data where 99.9% of the data points will lie within 3.34 standard deviations of the mean (Basic Statistical Methods for Engineers and Scientists, Kennedy and Neville, Harper and Row). Therefore, interim limitations are based on the mean plus 3.3 standard deviations.

   The Central Valley Water Board finds that the Discharger can undertake source control and treatment plant measures to maintain compliance with the interim limitations included in this Order. Interim limitations are established when compliance with final effluent limitations cannot be achieved by the existing discharge. Discharge of constituents in concentrations in excess of the final effluent limitations, but in compliance with the interim effluent limitations, can significantly degrade water quality and adversely affect the beneficial uses of the receiving stream on a long-term basis. The interim limitations, however, establish an enforceable ceiling concentration until compliance with the effluent limitation can be achieved.

Table F-22. Interim Mercury Effluent Limitation Calculation Summary

Parameter	Units	Maximum Annual Effluent Loading	Number of Running Annual Load Calcs	Interim Limitation
Mercury, Total Recoverable	g/yr	7.08	17	10.6

F. Land Discharge Specifications – Not Applicable

G. Recycling Specifications – Not Applicable

V. RATIONALE FOR RECEIVING WATER LIMITATIONS

A. Surface Water

1. CWA section 303(a-c), requires states to adopt water quality standards, including criteria where they are necessary to protect beneficial uses. The Central Valley Water Board adopted water quality criteria as water quality objectives in the Basin Plan. The Basin Plan states that "[t]*he numerical and narrative water quality objectives define the least*

stringent standards that the Regional Water Board will apply to regional waters in order to protect the beneficial uses." The Basin Plan includes numeric and narrative water quality objectives for various beneficial uses and water bodies. This Order contains receiving surface water limitations based on the Basin Plan numerical and narrative water quality objectives for bacteria, biostimulatory substances, color, chemical constituents, dissolved oxygen, floating material, oil and grease, pH, pesticides, radioactivity, suspended sediment, settleable substances, suspended material, tastes and odors, temperature, toxicity, and turbidity.

a. **pH**. Order R5-2008-0164 established a receiving water limitation for pH specifying that discharges from the Facility shall not cause the ambient pH to change by more than 0.5 units based on the water quality objective for pH in the Basin Plan. The Central Valley Water Board adopted Resolution R5-2007-0136 on 25 October 2007, amending the Basin Plan to delete the portion of the pH water quality objective that limits the change in pH to 0.5 units and the allowance of averaging periods for pH. The Basin Plan amendment has been approved by the State Water Board, the Office of Administrative Law, and USEPA. Consistent with the revised water quality objective in the Basin Plan, this Order does not require a receiving water limitation for pH change.

   In Finding No. 14 of Resolution R5-2007-0136 the Central Valley Water Board found that the change in the pH receiving water objective is consistent with the State Water Board Resolution No. 68-16, in that the changes to water quality objectives (i) consider maximum benefit to the people of the State, (ii) will not unreasonably affect present and anticipated beneficial use of waters, and (iii) will not result in water quality less than that prescribed in policies, and is consistent with the federal Antidegradation Policy (40 CFR 131.12).

   Ammonia is the only constituent in the discharge regulated by this Order directly related to pH. The fixed ammonia effluent limitations in this Order are based on reasonable worse-case conditions. Although ammonia criteria are based on pH, and the pH receiving water limitations are more lenient in this Order than in the previous permit, the fixed ammonia limits are developed to protect under worse-case pH conditions. Therefore the relaxation of the pH receiving water limitation will protect aquatic life and other beneficial uses and will not unreasonably affect present and anticipated beneficial uses nor result in water quality less than described in applicable policies. The relaxation of the receiving water limitation is not expected to cause other impacts on water quality. The Central Valley Water Board finds that the relaxation of the pH receiving water limitation (i) is to the maximum benefit to the people of the State, (ii) will not unreasonably affect present and anticipated beneficial use of waters, and (iii) will not result in water quality less than that prescribed in policies, and is consistent with the federal Antidegradation Policy (40 CFR 131.12).

   The revised receiving water limitation for pH, which is based on the amendment to the Basin Plan's pH water quality objective, reflects current scientifically supported pH requirements for the protection of aquatic life and other beneficial uses. The revised receiving water limitation for pH is more consistent with the current USEPA recommended criteria and is fully protective of aquatic life and the other beneficial uses listed in the Basin Plan. Changes in pH when pH is maintained within the range of 6.5 to 8.5 are neither beneficial nor adverse and, therefore, are not considered to be degradation in water quality. Attempting to restrict pH changes to 0.5 pH units would incur substantial costs without demonstrable benefits to beneficial uses. Thus, any changes in pH that would occur under the revised pH

limitation would not only be protective of beneficial uses, but also would be consistent with maximum benefit to people of the State. Therefore the proposed amendment will not violate antidegradation policies.

b. **Temperature**. The Thermal Plan is applicable to the discharge from the Facility. For the purposes of the Thermal Plan, the discharge is considered to be an *Existing Discharge* of *Elevated Temperature Waste* to an *Estuary*, as defined in the Thermal Plan. Therefore, the Discharger must meet the water quality objective at Section 5.A(1) of the Thermal Plan, which requires compliance with the following:

i. The maximum temperature shall not exceed the natural receiving water temperature by more than 20°F.

ii. Elevated temperature waste discharges either individually or combined with other discharges shall not create a zone, defined by water temperatures of more than 1°F above natural receiving water temperature, which exceeds 25 percent of the cross-sectional area of a main river channel at any point.

iii. No discharge shall cause a surface water temperature rise greater than 4°F above the natural temperature of the receiving waters at any time or place.

iv. Additional limitations shall be imposed when necessary to assure protection of beneficial uses.

This Order contains receiving water limitations for temperature based on the Thermal Plan.

c. **Turbidity**. Order R5-2008-0164 established a receiving water limitation for turbidity specifying that discharges from the Facility shall not cause the turbidity to increase more than 1 NTU where natural turbidity is between 0 and 5 NTU based on the water quality objective for turbidity in the Basin Plan. The Central Valley Water Board adopted Resolution R5-2007-0136 on 25 October 2007, amending the Basin Plan to limit turbidity to 2 NTU when the natural turbidity is less than 1 NTU. The Basin Plan amendment has been approved by the State Water Board, the Office of Administrative Law, and USEPA. Consistent with the revised water quality objective in the Basin Plan, this Order limits turbidity to 2 NTU when the natural turbidity is less than 1 NTU.

In Finding No. 14 of Resolution R5-2007-0136 the Central Valley Water Board found that the change in the turbidity receiving water objective is consistent with the State Water Board Resolution No. 68-16, in that the changes to water quality objectives (i) consider maximum benefit to the people of the State, (ii) will not unreasonably affect present and anticipated beneficial use of waters, and (iii) will not result in water quality less than that prescribed in policies, and is consistent with the federal Antidegradation Policy (40 CFR 131.12).

This Order includes operational specifications that require the Discharger to operate the treatment system to insure that turbidity shall not exceed 0.2 NTU more than 5 percent of the time within a 24 hour period and 0.5 NTU at any time. Because this Order limits the discharge of turbidity to 0.2 NTU, the Order will be protective of the receiving water under all natural background conditions as defined in the Basin Plan's revised water quality objective for turbidity. The relaxation of the turbidity receiving water limitation will protect aquatic life and other beneficial uses and will not unreasonably affect present and anticipated beneficial uses nor result in water quality less than described in applicable policies. The relaxation of the receiving water limitation is not expected to cause other impacts on water quality. The Central

Valley Water Board finds that (i) the relaxation of the turbidity receiving water limitation is to the maximum benefit to the people of the State, (ii) will not unreasonably affect present and anticipated beneficial use of waters, and (iii) will not result in water quality less than that prescribed in policies, and is consistent with the federal Antidegradation Policy (40 CFR 131.12).

The revised receiving water limitation for turbidity, which is based on the amendment to the Basin Plan's turbidity water quality objective, reflects current scientifically supported turbidity requirements for the protection of aquatic life and other beneficial uses and, therefore, will be fully protective of aquatic life and the other beneficial uses listed in the Basin Plan. Changes in turbidity allowed by the revised receiving water limitation, when ambient turbidity is below 1 NTU, would not adversely affect beneficial uses and would maintain water quality at a level higher than necessary to protect beneficial uses. Restricting low-level turbidity changes further may require costly upgrades, which would not provide any additional protection of beneficial uses. Thus, any changes in turbidity that would occur under the amended turbidity receiving water limitation would not only be protective of beneficial uses, but also would be consistent with maximum benefit to people of the State. Therefore, the relaxed receiving water limitations for turbidity will not violate antidegradation policies.

B. Groundwater

1. The beneficial uses of the underlying groundwater are municipal and domestic supply, industrial service supply, industrial process supply, and agricultural supply.
2. Basin Plan water quality objectives include narrative objectives for chemical constituents, tastes and odors, and toxicity of groundwater. The toxicity objective requires that groundwater be maintained free of toxic substances in concentrations that produce detrimental physiological responses in humans, plants, animals, or aquatic life. The chemical constituent objective states groundwater shall not contain chemical constituents in concentrations that adversely affect any beneficial use. The tastes and odors objective prohibits taste- or odor-producing substances in concentrations that cause nuisance or adversely affect beneficial uses. The Basin Plan also establishes numerical water quality objectives for chemical constituents and radioactivity in groundwaters designated as municipal supply. These include, at a minimum, compliance with MCLs in Title 22 of the CCR. The bacteria objective prohibits coliform organisms at or above 2.2 MPN/100 mL. The Basin Plan requires the application of the most stringent objective necessary to ensure that waters do not contain chemical constituents, toxic substances, radionuclides, taste- or odor-producing substances, or bacteria in concentrations that adversely affect municipal or domestic supply, agricultural supply, industrial supply or some other beneficial use.
3. Order R5-2003-0065 contained groundwater limitations due to the potential for percolation of wastewater from the unlined aerated lagoon and two unlined facultative/holding ponds. Although monitoring during 2005 by the Discharger indicated no impact from the unlined lagoon and ponds, these units are still in use and therefore the groundwater limitations are being retained from Order R5-2003-0065 to protect the beneficial uses of the underlying groundwater.

VI. RATIONALE FOR PROVISIONS

A. Standard Provisions

Standard Provisions, which apply to all NPDES permits in accordance with 40 CFR section 122.41, and additional conditions applicable to specified categories of permits in accordance

with 40 CFR section 122.42, are provided in Attachment D. The Discharger must comply with all standard provisions and with those additional conditions that are applicable under section 122.42.

Sections 122.41(a)(1) and (b) through (n) of 40 CFR establish conditions that apply to all state-issued NPDES permits. These conditions must be incorporated into the permits either expressly or by reference. If incorporated by reference, a specific citation to the regulations must be included in the Order. Section 123.25(a)(12) of 40 CFR allows the state to omit or modify conditions to impose more stringent requirements. In accordance with 40 CFR section 123.25, this Order omits federal conditions that address enforcement authority specified in 40 CFR sections 122.41(j)(5) and (k)(2) because the enforcement authority under the Water Code is more stringent. In lieu of these conditions, this Order incorporates by reference Water Code section 13387(e).

B. Special Provisions

1. Reopener Provisions

a. **Mercury.** The Delta Mercury Control Program was designed to proceed in two phases. Phase 1 spans a period of approximately 9 years. Phase 1 emphasizes studies and pilot projects to develop and evaluate management practices to control methylmercury. At the end of Phase 1, the Central Valley Water Board will conduct a Phase 1 Delta Mercury Control Program Review that considers: modification of methylmercury goals, objectives, allocations and/or the Final Compliance Date; implementation of management practices and schedules for methylmercury controls; and adoption of a mercury offset program for dischargers who cannot meet their load and waste load allocations after implementing all reasonable load reduction strategies. The fish tissue objectives, the linkage analysis between objectives and sources, and the attainability of the allocations will be re-evaluated based on the findings of Phase 1 control studies and other information. The linkage analysis, fish tissue objectives, allocations, and time schedules may be adjusted at the end of Phase 1, or subsequent program reviews, as appropriate. Therefore, this Order may be reopened to address changes to the Delta Mercury Control Program.

b. **Bay-Delta Plan South Salinity Objectives Update.** The State Water Board is currently in the process of updating the South Delta Salinity Objectives contained in the Bay-Delta Plan. The updated salinity objectives may result in needed changes to the salinity requirements in this Order. Therefore, this Order may be reopened to modify salinity requirements, as appropriate, in accordance with changes to the Bay-Delta Plan.

c. **Pollution Prevention.** This Order requires the Discharger prepare a pollution prevention plan following Water Code section 13263.3(d)(3) for mercury. This reopener provision allows the Central Valley Water Board to reopen this Order for addition and/or modification of effluent limitations and requirements for mercury based on a review of the pollution prevention plan.

d. **Whole Effluent Toxicity.** This Order requires the Discharger to investigate the causes of, and identify corrective actions to reduce or eliminate effluent toxicity through a TRE. This Order may be reopened to include a numeric chronic toxicity limitation, a new acute toxicity limitation, and/or a limitation for a specific toxicant identified in the TRE. Additionally, if a numeric chronic toxicity water quality objective is adopted by the State Water Board, this Order may be reopened to include a numeric chronic toxicity limitation based on that objective.

e. **Water Effects Ratio (WER) and Metal Translators.** A default WER of 1.0 has been used in this Order for calculating criteria for applicable inorganic constituents. In addition, default dissolved-to-total metal translators have been used to convert water quality objectives from dissolved to total recoverable when developing effluent limitations for copper. If the Discharger performs studies to determine site-specific WERs and/or site-specific dissolved-to-total metal translators, this Order may be reopened to modify the effluent limitations for the applicable inorganic constituents.

f. **Drinking Water Policy.** On 26 July 2013 the Central Valley Water Board adopted Resolution No. R5-2013-0098 amending the Basin Plan and establishing a Drinking Water Policy. The State Water Board will consider adoption of the Drinking Water Policy at a future meeting. This Order may be reopened to incorporate monitoring of drinking water constituents to implement the Drinking Water Policy.

g. **Ultraviolet Light (UV) Disinfection Operating Specifications.** UV System operating specifications are required to ensure that the UV system is operated to achieve the required pathogen removal. UV disinfection system specifications and monitoring and reporting requirements are required to ensure that adequate UV dosage is applied to the wastewater to inactivate pathogens (e.g., viruses) in the wastewater. UV dosage is dependent on several factors such as UV transmittance, UV power setting, wastewater turbidity, and wastewater flow through the UV disinfection system. The UV specifications in this Order are based on the NWRI guidelines. If the Discharger conducts a site-specific UV Engineering Study that identifies site-specific UV operating specifications that will achieve the virus inactivation required by Title 22 for disinfected tertiary recycled water, this Order may be reopened to modify the UV specifications.

h. **Diazinon and Chlorpyrifos Basin Plan Amendment.** Central Valley Water Board staff is developing a Basin Plan Amendment to provide a chlorpyrifos and diazinon effluent limitation exemption if a discharger can demonstrate that diazinon and chlorpyrifos have not been detected in the effluent. The proposed Basin Plan Amendment may result in needed changes to the diazinon and chlorpyrifos requirements in this Order. As discussed in the RPA for diazinon and chlorpyrifos, there have been no detectable results for these constituents. Therefore, this Order may be reopened to modify diazinon and chlorpyrifos effluent limitations, as appropriate, in accordance with an amendment to the Basin Plan.

2. Special Studies and Additional Monitoring Requirements

a. **Chronic Whole Effluent Toxicity Requirements.** The Basin Plan contains a narrative toxicity objective that states, "*All waters shall be maintained free of toxic substances in concentrations that produce detrimental physiological responses in human, plant, animal, or aquatic life.*" (Basin Plan at page III-8.00). Based on whole effluent chronic toxicity testing performed by the Discharger from 22 December 2010 through 30 April 2013, the discharge has reasonable potential to cause or contribute to an in-stream excursion above of the Basin Plan's narrative toxicity objective.

This provision requires the Discharger to develop a TRE Workplan in accordance with USEPA guidance. In addition, the provision provides a numeric toxicity monitoring trigger and requirements for accelerated monitoring, as well as, requirements for TRE initiation if toxicity has been demonstrated.

Monitoring Trigger. A numeric toxicity monitoring trigger of > 1 TUc (where TUc = 100/NOEC) is applied in the provision, because this Order does not allow any

dilution for the chronic condition. Therefore, a TRE is triggered when the effluent exhibits toxicity at 100% effluent.

Accelerated Monitoring. The provision requires accelerated WET testing when a regular WET test result exceeds the monitoring trigger. The purpose of accelerated monitoring is to determine, in an expedient manner, whether there is toxicity before requiring the implementation of a TRE. Due to possible seasonality of the toxicity, the accelerated monitoring should be performed in a timely manner, preferably taking no more than 2 to 3 months to complete.

The provision requires accelerated monitoring consisting of four chronic toxicity tests in a six-week period (i.e., one test every two weeks) using the species that exhibited toxicity. Guidance regarding accelerated monitoring and TRE initiation is provided in the *Technical Support Document for Water Quality-based Toxics Control,* EPA/505/2-90-001, March 1991 (TSD). The TSD at page 118 states, "*EPA recommends if toxicity is repeatedly or periodically present at levels above effluent limits more than 20 percent of the time, a TRE should be required.*" Therefore, four accelerated monitoring tests are required in this provision. If no toxicity is demonstrated in the four accelerated tests, then it demonstrates that toxicity is not present at levels above the monitoring trigger more than 20 percent of the time (only 1 of 5 tests are toxic, including the initial test). However, notwithstanding the accelerated monitoring results, if there is adequate evidence of effluent toxicity (i.e., toxicity present exceeding the monitoring trigger more than 20 percent of the time), the Executive Officer may require that the Discharger initiate a TRE.

See the WET Accelerated Monitoring Flow Chart (Figure F-1), below, for further clarification of the accelerated monitoring requirements and for the decision points for determining the need for TRE initiation.

TRE Guidance. The Discharger is required to prepare a TRE Workplan in accordance with USEPA guidance. Numerous guidance documents are available, as identified below:

- T*oxicity Reduction Evaluation Guidance for Municipal Wastewater Treatment Plants*, EPA/833-B-99/002, August 1999.
- *Generalized Methodology for Conducting Industrial Toxicity Reduction Evaluations* (TREs), EPA/600/2-88/070, April 1989.
- *Methods for Aquatic Toxicity Identification Evaluations: Phase I Toxicity Characterization Procedures, Second Edition*, EPA 600/6-91/003, February 1991.
- *Toxicity Identification Evaluation: Characterization of Chronically Toxic Effluents, Phase I*, EPA/600/6-91/005F, May 1992.
- *Methods for Aquatic Toxicity Identification Evaluations: Phase II Toxicity Identification Procedures for Samples Exhibiting Acute and Chronic Toxicity, Second Edition*, EPA/600/R-92/080, September 1993.
- *Methods for Aquatic Toxicity Identification Evaluations: Phase III Toxicity Confirmation Procedures for Samples Exhibiting Acute and Chronic Toxicity, Second Edition*, EPA 600/R-92/081, September 1993.

- *Methods for Measuring the Acute Toxicity of Effluents and Receiving Waters to Freshwater and Marine Organisms, Fifth Edition*, EPA-821-R-02-012, October 2002.

- *Short-term Methods for Estimating the Chronic Toxicity of Effluents and Receiving Waters to Freshwater Organisms, Fourth Edition*, EPA-821-R-02-013, October 2002.

- *Technical Support Document for Water Quality-based Toxics Control*, EPA/505/2-90-001, March 1991.

Figure F-1
WET Accelerated Monitoring Flow Chart

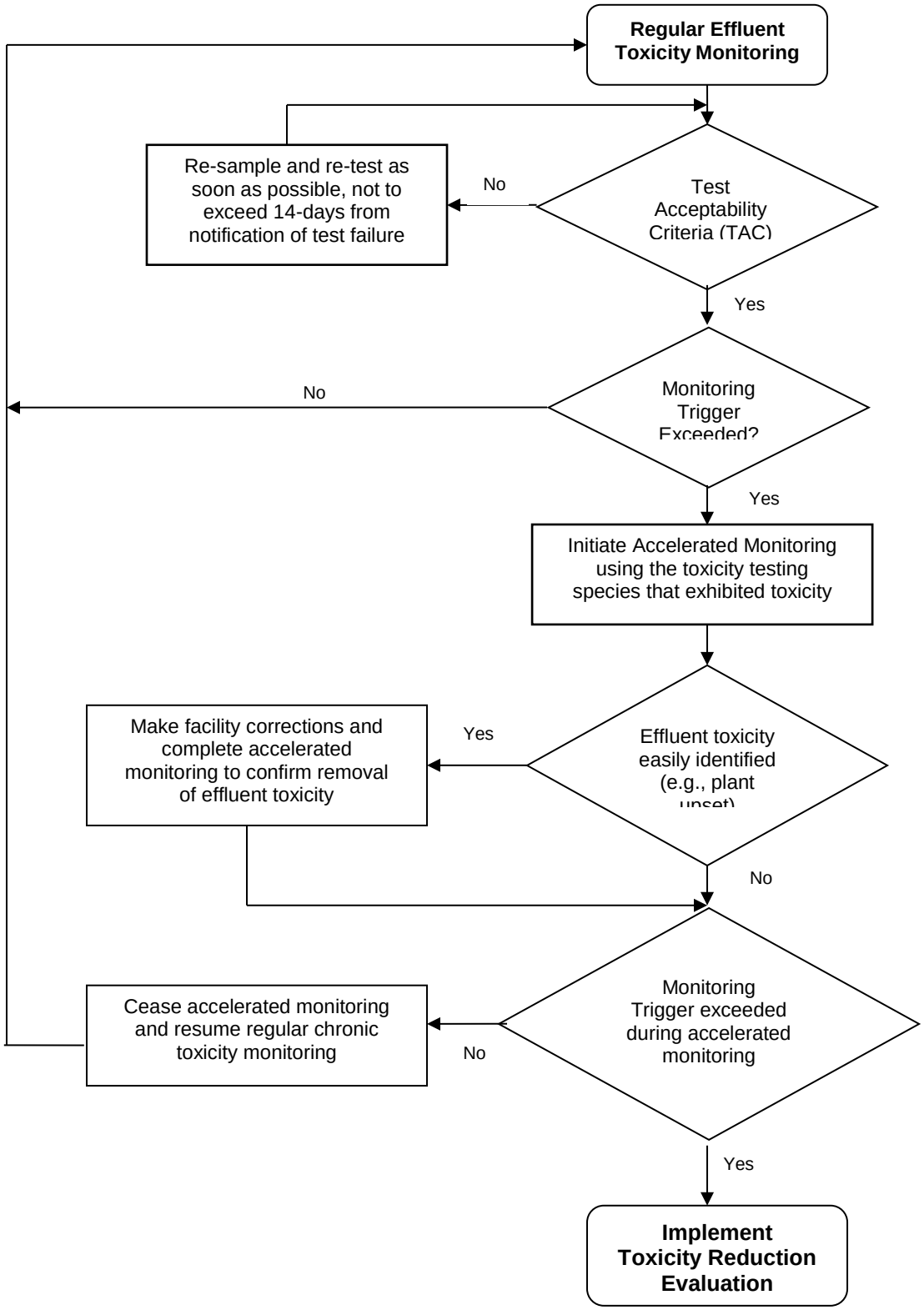

b. **Phase 1 Methylmercury Control Study.** The Basin Plan's Delta Mercury Control Program requires NPDES dischargers, working with other stakeholders, to conduct methylmercury control studies (Control Studies) to evaluate existing control methods and, as needed, develop additional control methods that could be implemented to achieve their methylmercury load and waste load allocations. Control Studies can be developed through a stakeholder group approach or other collaborative mechanism, or by individual dischargers. The Discharger chose to not participate in the Central Valley Clean Water Association (CVCWA) Coordinated Methylmercury Control Study (Study).

The Central Valley Water Board will use the Phase 1 Control Studies' results and other information to consider amendments to the Delta Mercury Control Program during the Phase 1 Delta Mercury Control Program Review. The objective of the Control Studies is to evaluate existing control methods and, as needed, develop additional control methods that could be implemented to achieve the methylmercury load and waste load allocation. In accordance with the Delta Mercury Control Plan, a work plan was submitted by the Discharge in June 2012. The Central Valley Water Board commits to supporting an Adaptive Management approach. The adaptive management approach includes the formation of a Stakeholder Group(s) and a Technical Advisory Committee (TAC).

The study work plan will be reviewed and approval by the TAC and subsequently approved by the Executive Officer. The Discharge shall immediately implement the work plan upon Executive Officer approval, and a progress report shall be submitted by **20 October 2015.**

The Study shall evaluate the feasibility of reducing sources more than the minimum amount needed to achieve the methylmercury allocation. The Study also may include an evaluation of innovative actions, watershed approaches, offsets projects, and other short and long-term actions that result in reducing inorganic (total) mercury and methylmercury to address the accumulation of methylmercury in fish tissue and to reduce methylmercury exposure. The Study may evaluate the effectiveness of using inorganic (total) mercury controls to control methylmercury discharges.

The Study shall include a description of methylmercury and/or inorganic (total) mercury management practices identified in Phase 1; an evaluation of the effectiveness, and costs, potential environmental effects, and overall feasibility of the control actions. The Study shall also include proposed implementation plans and schedules to comply with methylmercury allocations as soon as possible. The Study shall be submitted by **20 October 2018.**

The Executive Officer may authorize extending the Study due date. The Executive Officer may, after public notice, extend the due date up to two years if the Discharger demonstrates it is making significant progress towards developing, implementing and/or completing the Study and reasonable attempts have been made to secure funding for the Study, but the Discharger has experienced severe budget shortfalls.

3. Best Management Practices and Pollution Prevention

a. **Pollution Prevention Plan for Mercury**. The Basin Plan's Delta Mercury Control Plan requires NPDES permitted facilities to submit and implement pollutant minimization programs for mercury. The Discharger submitted a PPP dated 20 April 2012. The PPP shall continue to be implemented and annual progress reports shall

discuss the effectiveness of the PPP in the reduction of mercury in the discharge, include a summary of mercury and methylmercury monitoring results, and discuss updates to the PPP. The minimum requirements for the PPP include the following:

i. An estimate of all of the sources of a pollutant contributing, or potentially contributing, to the loadings of a pollutant in the treatment plant influent.

ii. An analysis of the methods that could be used to prevent the discharge of the pollutants into the Facility, including application of local limits to industrial or commercial dischargers regarding pollution prevention techniques, public education and outreach, or other innovative and alternative approaches to reduce discharges of the pollutant to the Facility. The analysis also shall identify sources, or potential sources, not within the ability or authority of the Discharger to control, such as pollutants in the potable water supply, airborne pollutants, pharmaceuticals, or pesticides, and estimate the magnitude of those sources, to the extent feasible.

iii. An estimate of load reductions that may be attained through the methods identified in subparagraph ii.

iv. A plan for monitoring the results of the pollution prevention program.

v. A description of the tasks, cost, and time required to investigate and implement various elements in the pollution prevention plan.

vi. A statement of the Discharger's pollution prevention goals and strategies, including priorities for short-term and long-term action, and a description of the Discharger's intended pollution prevention activities for the immediate future.

vii. A description of the Discharger's existing pollution prevention programs.

viii. An analysis, to the extent feasible, of any adverse environmental impacts, including cross-media impacts or substitute chemicals that may result from the implementation of the pollution prevention program.

ix. An analysis, to the extent feasible, of the costs and benefits that may be incurred to implement the pollution prevention program.

b. **Mercury Exposure Reduction Program.** The Basin Plan's Delta Mercury Control Program requires dischargers to participate in a Mercury Exposure Reduction Program. The Exposure Reduction Program is needed to address public health impacts of mercury in Delta fish, including activities that reduce actual and potential exposure of and mitigate health impacts to those people and communities most likely to be affected by mercury in Delta caught fish, such as subsistence fishers and their families.

The Exposure Reduction Program must include elements directed toward:

i. Developing and implementing community-driven activities to reduce mercury exposure;

ii. Raising awareness of fish contamination issues among people and communities most likely affected by mercury in Delta-caught fish such as subsistence fishers and their families;

iii. Integrating community-based organizations that serve Delta fish consumers, Delta fish consumers, tribes, and public health agencies in the design and implementation of an exposure reduction program;

iv. Identifying resources, as needed, for community-based organizations and tribes to participate in the Program;

v. Utilizing and expanding upon existing programs and materials or activities in place to reduce mercury, and as needed, create new materials or activities; and

vi. Developing measures for program effectiveness.

This Order requires the Discharger participate in a Mercury Exposure Reduction Program (MERP) in accordance with the Delta Mercury Control Program. By letter dated 13 May 2013, the Discharger elected to provide financial support in the collective MERP with other Delta dischargers, rather than be individually responsible for any MERP activities. The objective of the Exposure Reduction Program is to reduce mercury exposure of Delta fish consumers most likely affected by mercury. The work plan shall address the Exposure Reduction Program objective, elements, and the Discharger's coordination with other stakeholders. The Discharger shall integrate or, at minimum, provide good-faith opportunities for integration of community-based organizations, tribes, and consumers of Delta fish into planning, decision making, and implementation of exposure reduction activities. The Discharger shall continue to participate in the group effort to implement the work plan.

c. **Salinity Evaluation and Minimization Plan.** An Evaluation and Minimization Plan for salinity is required in this Order to ensure adequate measures are developed and implemented by the Discharger to reduce the discharge of salinity to Deuel Drain.

4. Construction, Operation, and Maintenance Specifications

a. **Filtration System Operating Specifications**. Turbidity is included as an operational specification as an indicator of the effectiveness of the filtration system for providing adequate disinfection. The tertiary treatment process utilized at this Facility is capable of reliably meeting a turbidity limitation of 0.2 nephelometric turbidity units (NTU) as a daily average. Failure of the treatment system such that virus removal is impaired would normally result in increased particles in the effluent, which result in higher effluent turbidity and could impact UV dosage. Turbidity has a major advantage for monitoring filter performance, allowing immediate detection of filter failure and rapid corrective action. The operational specification requires that turbidity prior to disinfection shall not exceed 0.2 NTU more than 5 percent of the time and a daily maximum of 0.5 NTU.

b. **UV Disinfection System Operating Specifications.** This Order requires that wastewater shall be oxidized, coagulated, filtered, and adequately disinfected pursuant to DPH reclamation criteria, CCR, Title 22, division 4, chapter 3, (Title 22), or equivalent. To ensure that the UV disinfection system is operated to achieve the required pathogen removal, this Order includes effluent limits for total coliform organisms, filtration system operating specifications, and UV disinfection system operating specifications. Compliance with total coliform effluent limits alone does not ensure that pathogens in the municipal wastewater have been deactivated by the UV disinfection system. Compliance with the effluent limits and the filtration system and UV disinfection operating specifications demonstrates compliance with the equivalency to Title 22 disinfection requirement.

The National Water Research Institute (NWRI) and American Water Works Association Research Foundation NWRI/AWWRF's *Ultraviolet Disinfection*

Guidelines for Drinking Water and Water Reuse" first published in December 2000 and revised as a Third Edition dated August 2012 (NWRI guidelines) includes UV operating specifications for compliance with Title 22. For water recycling in accordance with Title 22, the UV system shall be an approved system included in the Treatment Technology Report for Recycled Water, December 2009 (or a later version, as applicable) published by the DPH. The UV system shall also conform to all requirements and operating specifications of the NWRI guidelines. A Memorandum dated 1 November 2004 issued by DPH to Regional Water Board executive offices recommended that provisions be included in permits for water recycling treatment plants employing UV disinfection requiring Dischargers to establish fixed cleaning frequency of lamp sleeves, as well as, include provisions that specify minimum delivered UV dose that must be maintained (per the NWRI Guidelines) disinfection system specifications and monitoring and reporting requirements are required to ensure that adequate UV dosage is applied to the wastewater to inactivate pathogens (e.g., viruses) in the wastewater. UV dosage is dependent on several factors such as UV transmittance, UV power setting, wastewater turbidity, and wastewater flow through the UV disinfection system. Monitoring and reporting of these parameters is necessary to determine compliance with minimum dosage requirements established by the DPH and the NWRI and AWWARF's "Ultraviolet Disinfection Guidelines for Drinking Water and Water Reuse" first published in December 2000 revised as a Third Edition dated August 2012. In addition, a memorandum dated 1 November 2004 issued by DPH to Regional Water Board executive officers recommended that provisions be included in permits to water recycling treatment plants employing UV disinfection requiring dischargers to establish fixed cleaning frequency of quartz sleeves as well as include provisions that specify minimum delivered UV dose that must be maintained (as recommended by the NWRI/AWWARF UV Disinfection Guidelines).

For membrane filtration, the NWRI guidelines recommend a minimum hourly average UV dose of 80 mJ/cm^2. Therefore, this Order includes UV operating specifications requiring a minimum hourly average UV dose of 80 mJ/cm^2 and a minimum hourly average UV transmittance of 65%, per the NWRI Guidelines. If the Discharger conducts a site-specific UV engineering study that demonstrates a lower UV dose meets a Title 22 equivalent virus removal, this Order may be reopened to revise the UV operating specifications accordingly.

5. Special Provisions for Municipal Facilities (POTWs Only)

a. The State Water Board issued General Waste Discharge Requirements for Sanitary Sewer Systems, Water Quality Order 2006-0003-DWQ (General Order) on 2 May 2006. The Monitoring and Reporting Requirements for the General Order were amended by Water Quality Order WQ 2008-0002-EXEC on 20 February 2008. The General Order requires public agencies that own or operate sanitary sewer systems with greater than one mile of pipes or sewer lines to enroll for coverage under the General Order. The General Order requires agencies to develop sanitary sewer management plans (SSMPs) and report all sanitary sewer overflows (SSOs), among other requirements and prohibitions.

Furthermore, the General Order contains requirements for operation and maintenance of collection systems and for reporting and mitigating sanitary sewer overflows. Inasmuch that the Discharger's collection system is part of the system that is subject to this Order, certain standard provisions are applicable as specified in Provisions, section VI.C.5. For instance, the 24-hour reporting requirements in this Order are not included in the General Order. The Discharger must comply with

both the General Order and this Order. The Discharger and public agencies that are discharging wastewater into the facility were required to obtain enrollment for regulation under the General Order by 1 December 2006.

b. Based on a request from the Discharger, the requirement of biosolids storage facilities to be designed and maintained to prevent washout of inundation from a storm or flood with a return frequency of 100 years was changed to not apply to the solar drying of biosolids during the non-flood season (April through October), provided that biosolids are removed and disposed of prior to 1 November of each year. Allowing use of the existing sludge drying beds during the dry season, when the 100-year flood would not occur, allows a reduction in the amount of biosolids that must be transported off-site for disposal.

6. Other Special Provisions

a. **Title 22, or Equivalent, Disinfection Requirements.** To protect public health and safety, wastewater discharged to San Joaquin River, to which Deuel Drain is tributary, shall be oxidized, coagulated, filtered, and adequately disinfected pursuant to DPH reclamation criteria, CCR, Title 22, division 4, chapter 3, (Title 22), or equivalent.

7. Compliance Schedules

a. **Compliance Schedule for Methylmercury.** The State Water Board adopted the Policy for Compliance Schedules in *National Pollutant Discharge Elimination System Permits* (Resolution 2008-0025), which is the governing Policy for compliance schedules in NPDES permits (hereafter "Compliance Schedule Policy"). In accordance with the Compliance Schedule Policy and 40 CFR § 122.47, a Discharger who seeks a compliance schedule must demonstrate additional time is necessary to implement actions to comply with a more stringent permit limitation. The Discharger must provide the following documentation as part of the application requirements:

i. Diligent efforts have been made to quantify pollutant levels in the discharge and the sources of the pollutant in the waste stream, and the results of those efforts;

ii. Source control efforts are currently underway or completed, including compliance with any pollution prevention programs that have established;

iii. A proposed schedule for additional source control measures or waste treatment;

iv. Data demonstrating current treatment facility performance to compare against existing permit effluent limits, as necessary to determine which is the more stringent interim, permit effluent limit to apply if a schedule of compliance is granted;

v. The highest discharge quality that can reasonably be achieved until final compliance is attained;

vi. The proposed compliance schedule is as short as possible, given the type of facilities being constructed or programs being implemented, and industry experience with the time typically required to construct similar facilities or implement similar programs; and

vii. Additional information and analyses to be determined by the Regional Water Board on a case-by-case basis.

Based on information submitted with the ROWD, SMRs, and other miscellaneous submittals, it has been demonstrated to the satisfaction of the Central Valley Water Board that the Discharger needs time to implement actions to comply with the new effluent limitations for methylmercury.

The Delta Mercury Control Program is composed of two phases. Phase 1 spans from 20 October 2011 through the Phase I Delta Mercury Control Program Review, expected to conclude by October 2020. Phase 1 emphasizes studies and pilot projects to develop and evaluate management practices to control methylmercury. Phase 1 includes provisions for: implementing pollution minimization programs and interim mass limits for inorganic (total) mercury point sources in the Delta and Yolo Bypass; controlling sediment-bound mercury in the Delta and Yolo Bypass that may become methylated in agricultural lands, wetland, and open-water habitats; and reducing total mercury loading to San Francisco Bay, as required by the Water Quality Control Plan for the San Francisco Bay Basin.

At the end of Phase 1, the Central Valley Water Board will conduct a Phase 1 Delta Mercury Control Program Review that considers: modification of methylmercury goals, objectives, allocations and/or the Final Compliance Date; implementation of management practices and schedules for methylmercury controls; and adoption of a mercury offset program for dischargers who cannot meet their load and waste load allocations after implementing all reasonable load reduction strategies. The review also will consider other potential public and environmental benefits and negative impacts (e.g., habitat restoration, flood protection, water supply, fish consumption) of attaining the allocations. The fish tissue objectives, the linkage analysis between objectives and sources, and the attainability of the allocations will be re-evaluated based on the findings of Phase 1 control studies and other information. The linkage analysis, fish tissue objectives, allocations, and time schedules shall be adjusted at the end of Phase 1, or subsequent program reviews, if appropriate.

Phase 2 begins after the Phase 1 Delta Mercury Control Program Review or by 20 October 2022, whichever occurs first, and ends in 2030. During Phase 2, dischargers shall implement methylmercury control programs and continue inorganic (total) mercury reduction programs. Compliance monitoring and implementation of upstream control programs also shall occur in Phase 2. Any compliance schedule contained in an NPDES permit must be "…*an enforceable sequence of actions or operations leading to compliance with an effluent limitation…*" per the definition of a compliance schedule in CWA Section 502(17). *See also* 40 CFR § 122.2 (definition of schedule of compliance). The compliance schedule for methylmercury meets these requirements.

Federal Regulations at 40 CFR § 122.47(a)(1) requires that, "*Any schedules of compliance under this section shall require compliance as soon as possible*…" The Compliance Schedule Policy also requires that compliance schedules are as short as possible and may not exceed 10 years, except when *"…a permit limitation that implements or is consistent with the waste load allocations specified in a TMDL that is established through a Basin Plan amendment, provided that the TMDL implementation plan contains a compliance schedule or implementation schedule.*" As discussed above, the Basin Plan's Delta Mercury Control Program includes compliance schedule provisions and allows compliance with the waste load allocations for methylmercury by 2030. Until the Phase 1 Control Studies are complete and the Central Valley Water Board conducts the Phase 1 Delta Mercury Control Program Review, it is not possible to determine the appropriate compliance date for the Discharger that is as soon as possible. Therefore, this Order

establishes a compliance schedule for the new, final, WQBELs for methylmercury with full compliance required by **31 December 2030**, which is consistent with the Final Compliance Date of the TMDL. At completion of the Phase 1 Delta Mercury Control Program Review, the final compliance date for this compliance schedule will be re-evaluated to ensure compliance is required as soon as possible. Considering the available information, the compliance schedule is as short as possible in accordance with federal regulations and the Compliance Schedule Policy.

VII. RATIONALE FOR MONITORING AND REPORTING REQUIREMENTS

Section 122.48 of 40 CFR requires that all NPDES permits specify requirements for recording and reporting monitoring results. Water Code sections 13267 and 13383 authorize the Central Valley Water Board to require technical and monitoring reports. The Monitoring and Reporting Program (MRP), Attachment E, establishes monitoring and reporting requirements that implement federal and state requirements. The following provides the rationale for the monitoring and reporting requirements contained in the MRP for this facility.

A. Influent Monitoring

1. Influent monitoring is required to collect data on the characteristics of the wastewater and to assess compliance with effluent limitations (e.g., BOD_5 and TSS reduction requirements). The monitoring frequencies for flow (continuous), BOD_5 (once per week), TSS (once per week), total dissolved solids (monthly), and electrical conductivity (monthly) are sufficient to evaluate compliance. Monitoring requirements for pH have not been retained from Order R5-2008-0164 as monitoring is no longer necessary to determine compliance with the permit requirements.

B. Effluent Monitoring

1. Pursuant to the requirements of 40 CFR 122.44(i)(2) effluent monitoring is required for all constituents with effluent limitations. Effluent monitoring is necessary to assess compliance with effluent limitations, assess the effectiveness of the treatment process, and to assess the impacts of the discharge on the receiving stream and groundwater.
2. Order R5-2008-0164 established effluent monitoring requirements at Monitoring Locations EFF-003 and EFF-004 to determine compliance with effluent limitations at Discharge Points 003 and 004. As discussed in section II.A of this Fact Sheet, this Order no longer regulates discharges at Discharge Points 003 and 004. Therefore, monitoring requirements at Monitoring Locations EFF-003 and EFF-004 have not been retained from Order R5-2008-0164. The remainder of this discussion applies to Monitoring Location EFF-001 only.
3. Effluent monitoring frequencies and sample types for flow (continuous), BOD_5 (once per week), pH (once per week), TSS (once per week), mercury (monthly), ammonia (weekly), chloride (semiannually), electrical conductivity (monthly), methylmercury (monthly), temperature (once per week), total coliform organisms (weekly), and total dissolved solids (semiannually) are sufficient to determine compliance with effluent limitations, where applicable, and characterize the effluent for these parameters.
4. Monitoring data collected over the term of Order R5-2008-0164 for benzene, bromoform, chlorodibromomethane, and dichlorobromomethane did not demonstrate reasonable potential to exceed water quality objectives/criteria. Thus, specific monitoring requirements for these parameters have not been retained from Order R5-2008-0164.
5. Order R5-2008-0057 required continuous monitoring for chlorine residual. In October 2010, the Discharger completed upgrades to the Facility, which included replacing chlorine disinfection with UV disinfection. Chlorine is now only used when the

Discharger is cleaning the membrane filters, and during cleaning, water flow is stopped and the chlorinated water is rerouted back to the headworks for treatment before being discharged into the receiving water. Due to the conversion to UV disinfection and intermittent chlorine use for filter maintenance, this Order reduces monitoring to once per day when chlorine is used for maintenance of the membrane filters.

6. This Order establishes new effluent limitations for copper and cyanide. Therefore, this Order establishes monthly monitoring for copper and cyanide to determine compliance with the new effluent limitations.

7. This Order establishes monthly monitoring for hardness to ensure that adequate data is available to properly adjust water quality criteria for hardness-based metals.

8. Order R5-2008-0164 established an effluent limitation and monthly monitoring requirements for nitrate. This Order replaces the effluent limitation for nitrate with an effluent limitation for nitrate plus nitrite and establishes a new effluent limitation for nitrite. Therefore, this Order discontinues monitoring requirements for nitrate and establishes monthly monitoring requirements for nitrate plus nitrate and nitrite to determine compliance with the applicable effluent limitations.

9. This Order includes effluent limitations for diazinon and chlorpyrifos based on the applicable TMDL for the Sacramento-San Joaquin Delta. Diazinon and chlorpyrifos were not detected in the effluent during the term of Order R5-2008-0164 and are not expected to be present in the Facility effluent. Therefore, this Order includes annual monitoring for diazinon and chlorpyrifos to characterize the presence in the effluent and determine compliance with the applicable effluent limitations based on the TMDL.

10. In accordance with Section 1.3 of the SIP, periodic monitoring for priority pollutants for which criteria or objectives apply and for which no effluent limitations have been established is required. This Order requires monitoring quarterly during 2016 to collect data to conduct an RPA for the next permit renewal. See Attachment E for more detailed requirements related to performing priority pollutant monitoring.

11. California Water Code section 13176, subdivision (a), states: "*The analysis of any material required by [Water Code sections 13000-16104] shall be performed by a laboratory that has accreditation or certification pursuant to Article 3 (commencing with Section 100825) of Chapter 4 of Part 1 of Division 101 of the Health and Safety Code*." DPH certifies laboratories through its Environmental Laboratory Accreditation Program (ELAP).

    Section 13176 cannot be interpreted in a manner that would violate federal holding time requirements that apply to NPDES permits pursuant to the Clean Water Act. (Wat. Code §§ 13370, subd. (c), 13372, 13377.) Section 13176 is inapplicable to NPDES permits to the extent it is inconsistent with Clean Water Act requirements. (Wat. Code § 13372, subd. (a).) The holding time requirements are 15 minutes for chlorine residual, dissolved oxygen, and pH and immediate analysis is required for temperature. (40 CFR § 136.3(e), Table II) Due to the location of the Facility, it is both legally and factually impossible for the Discharger to comply with section 13176 for constituents with short holding times.

C. Whole Effluent Toxicity Testing Requirements

1. **Acute Toxicity**. Consistent with Order R5-2008-0164, quarterly 96-hour bioassay testing is required to demonstrate compliance with the effluent limitation for acute toxicity.

2. **Chronic Toxicity**. Consistent with Order R5-2008-0164, quarterly chronic whole effluent toxicity testing is required in order to demonstrate compliance with the Basin Plan's narrative toxicity objective.

D. Receiving Water Monitoring

Delta Regional Monitoring Program

The Central Valley Water Board requires individual dischargers and discharger groups to conduct monitoring of Delta waters and Delta tributary waters in the vicinity of their discharge, known as ambient (or receiving) water quality monitoring. This monitoring provides information on the impacts of waste discharges on Delta waters, and on the extant condition of the Delta waters. However, the equivalent funds spent on current monitoring efforts could be used more efficiently and productively, and provide a better understanding of geographic and temporal distributions of contaminants and physical conditions in the Delta, and of other Delta water quality issues, if those funds were used for a coordinated ambient monitoring effort, rather than continue to be used in individual, uncoordinated ambient water quality monitoring programs. The Delta Regional Monitoring Program (RMP) will provide data to better inform management and policy decisions regarding the Delta.

This Order will allow Dischargers to elect to participate in the Delta RMP in lieu of conducting all or part of the individual receiving water monitoring required in the Monitoring and Reporting Program. If the Discharger elects to cease individual receiving water monitoring and participate in the Delta Regional Monitoring Program, the Discharger shall submit a letter signed by an authorized representative to the Executive Officer informing the Board that the Discharger will participate in the Delta Regional Monitoring Program and the date on which individual receiving water monitoring under Attachment E, Sections VIII.A.1 and VIII.A.2, will cease or be modified. Approval by the Executive Officer is required, and contingent on Delta RMP Steering Committee action on the forthcoming RMP monitoring plan.

Delta RMP data is not intended to be used directly to represent either upstream or downstream water quality for purposes of determining compliance with this Permit. Delta RMP monitoring stations are established generally as “integrator sites” to evaluate the combined impacts on water quality of multiple discharges into the Delta; Delta RMP monitoring stations would not normally be able to identify the source of any specific constituent, but would be used to identify water quality issues needing further evaluation. Delta RMP monitoring data may be used to help establish background receiving water quality for Reasonable Potential analyses in an NPDES Permit after evaluation of the applicability of the data for that purpose. In general, monitoring data from samples collected in the immediate vicinity of the discharge will be given greater weight in permitting decisions than receiving water monitoring data collected at greater distances from the discharge point. Delta RMP data, as with all environmental monitoring data, can provide an assessment of water quality at a specific place and time that can be used in conjunction with other information, such as other receiving water monitoring data, spatial and temporal distribution and trends of receiving water data, effluent data from the Discharger’s discharge and other point and non-point source discharges, receiving water flow volume, speed and direction, and other information to determine the likely source or sources of a constituent that resulted in exceedance of a receiving water quality objective.

If the Discharger begins to participate in the Delta Regional Monitoring Program in lieu of individual receiving water monitoring, the Discharger shall continue to participate in the Delta Regional Monitoring Program until such time as the Discharger informs the Board that participation in the Delta RMP will cease and individual monitoring is reinstituted. Receiving water monitoring under Attachment E, Sections VIII.A.1 and VIII.A.2, is not required under this Order so long as the Discharger adequately supports the Delta Regional Monitoring Program. Participation in the Delta RMP by a Discharger shall consist of providing funds and/or in-kind services to the Delta RMP at least equivalent to discontinued individual

monitoring and study efforts. If a discharger or discharger group fails to maintain adequate participation in the Delta RMP, as determined through criteria to be developed by the Delta RMP Steering Committee, the Steering Committee will recommend to the Central Valley Water Board that an individual monitoring program be reinstated for that discharger or discharger group.

If the Discharger is participating in the Delta Regional Monitoring Program as described in Attachment E, Section VIII, the Receiving Water portion of the required Characterization Monitoring need not be conducted by the Discharger. Instead, data from the Delta Regional Monitoring Program will be utilized to characterize the receiving water in the permit renewal. The Discharger may, however, conduct any site-specific receiving water monitoring deemed appropriate by the Discharger and submit that monitoring data with this Characterization Monitoring. In general, monitoring data from samples collected in the immediate vicinity of the discharge will be given greater weight in permitting decisions than receiving water monitoring data collected at greater distances from the discharge point. Historic receiving water monitoring data taken by the discharger and from other sources may also be evaluated to determine whether or not that data is representative of current receiving water conditions. If found to be representative of current conditions, then that historic data may be used in characterizing receiving water quality for the purposes of Reasonable Potential analysis.

1. **Surface Water**

   a. Receiving water monitoring is necessary to assess compliance with receiving water limitations and to assess the impacts of the discharge on the receiving stream.

   b. The receiving water monitoring frequency and sample type at Monitoring Locations RSW-001 and RSW-002 for pH (twice per month), dissolved oxygen (twice per month), electrical conductivity (twice per month), temperature (twice per month), total dissolved solids (monthly), and turbidity (twice per month) have been retained from Order R5-2008-0164.

   c. Monitoring requirements at Monitoring Locations RSW-001 and RSW-002 for total and unionized ammonia, chlorine residual, fecal coliform organisms, nitrate, and standard minerals have not been retained as monitoring is not necessary to determine compliance with permit requirements.

   d. This Order establishes an additional receiving water monitoring location, Monitoring Location RSW-003, located in the San Joaquin River at Paradise Cut, 1,000 feet east of the confluence with Deuel Drain. In accordance with Section 1.3 of the SIP, periodic monitoring for priority pollutants for which criteria or objectives apply and for which no effluent limitations have been established is required. This Order requires monitoring for priority pollutants and other pollutants of concern quarterly during the third year of the permit term, performed concurrently with effluent monitoring, at Monitoring Location RSW-003, in order to collect data to conduct an RPA for the next permit renewal. See Attachment E for more detailed requirements related to performing priority pollutant monitoring.

2. **Groundwater**

   a. Section 13267 states, in part, "(*a) A Regional Water Board, in establishing…waste discharge requirements… may investigate the quality of any waters of the state within its region" and "(b) (1) In conducting an investigation…, the Regional Water Board may require that any person who… discharges… waste…that could affect the quality of waters within its region shall furnish, under penalty of perjury, technical or*

monitoring program reports which the Regional Water Board requires. The burden, including costs, of these reports shall bear a reasonable relationship to the need for the report and the benefits to be obtained from the reports." The burden, including costs, of these reports shall bear a reasonable relationship to the need for the report and the benefits to be obtained from the reports. In requiring those reports, the Regional Water Board shall provide the person with a written explanation with regard to the need for the reports, and shall identify the evidence that supports requiring that person to provide the reports. The Monitoring and Reporting Program (Attachment E) is issued pursuant to California Water Code section 13267. The groundwater monitoring and reporting program required by this Order and the Monitoring and Reporting Program are necessary to assure compliance with these waste discharge requirements. The Discharger is responsible for the discharges of waste at the facility subject to this Order.

b. Monitoring of the groundwater must be conducted to determine if percolation of wastewater contained in the unlined aerated lagoon and unlined facultative/holding ponds at the Facility case an increase in constituent concentrations, when compared to background. The monitoring must, at a minimum, assess groundwater impacts including the vertical and lateral extent of degradation for all wastewater-related constituents which may have migrated to groundwater. If impacts are identified as a result of the groundwater monitoring, the Discharger must analyze whether additional or different methods of treatment or control of the discharge are necessary to provide best practicable treatment or control to comply with Resolution No. 68-16. Economic analysis is only one of many factors considered in determining best practicable treatment or control. If monitoring indicates that the discharge has incrementally increased constituent concentrations in groundwater above background, this permit may be reopened and modified. This Order contains Groundwater Limitations that allow groundwater quality to be degraded for certain constituents when compared to background groundwater quality, but not to exceed water quality objectives. If groundwater quality has been degraded by the discharge, the incremental change in pollutant concentration (when compared with background) may not be increased. If groundwater quality has been or may be degraded by the discharge, this Order may be reopened and specific numerical limitations established consistent with Resolution 68-16 and the Basin Plan.

c. Groundwater monitoring data collected during the previous permit term (in 2005) showed no change in groundwater quality in monitoring wells downstream of wastewater ponds compared to monitoring wells upstream of lagoon and ponds. This Order requires the Discharger to continue groundwater monitoring in accordance with the monitoring plan approved under the previous Order and includes a regular schedule for groundwater monitoring in the attached Monitoring and Reporting Program. The groundwater monitoring reports are necessary to evaluate impacts to waters of the State to assure protection of beneficial uses and compliance with Regional Water Board plans and policies, including Resolution 69-16. Evidence in the record includes effluent monitoring data that indicates the presence of constituents that may degrade groundwater and surface water.

d. Quarterly groundwater monitoring of ammonia, electrical conductivity, groundwater elevation, pH, nitrate, total coliform organisms, and total dissolved solids has been retained from Order R5-2003-0065.

E. Other Monitoring Requirements

1. Biosolids Monitoring

Biosolids monitoring is required to ensure compliance with the biosolids disposal requirements contained in the Special Provision contained in section VI.C.5.a. of this Order. Biosolids disposal requirements are imposed pursuant to 40 CFR Part 503 to protect public health and prevent groundwater degradation.

2. **Water Supply Monitoring**

Water supply monitoring is required to evaluate the source of constituents in the wastewater. Consistent with Order R5-2008-0164, this Order requires monthly monitoring for electrical conductivity and total dissolved solids. This Order discontinues water supply monitoring for standard minerals as monitoring for electrical conductivity and total dissolved solids is sufficient to characterize the salinity of the water supply.

3. **UV Disinfection System Monitoring**

UV system monitoring and reporting are required to ensure that the UV system is operated to adequately inactivate pathogens in the wastewater. UV disinfection system monitoring is imposed to achieve equivalency to requirements established by DPH, and the National Water Research Institute (NWRI), and American Water Works Association Research Foundation NWRI/AWWARF's *"Ultraviolet Disinfection Guidelines for Drinking Water and Water Reuse*."

VIII. PUBLIC PARTICIPATION

The Central Valley Water Board has considered the issuance of WDR's that will serve as an NPDES permit for Deuel Vocational Institution. As a step in the WDR adoption process, the Central Valley Water Board staff has developed tentative WDR's and has encouraged public participation in the WDR adoption process.

A. Notification of Interested Parties

The Central Valley Water Board notified the Discharger and interested agencies and persons of its intent to prescribe WDR's for the discharge and provided an opportunity to submit written comments and recommendations. Notification was provided through the following issuance of a Notice of Public Hearing that was posted on the Central Valley Water Board's website and posted at the Facility, the Tracy City Hall, and local US Post Office.

The public had access to the agenda and any changes in dates and locations through the Central Valley Water Board's website at:
http://www.waterboards.ca.gov/centralvalley/

B. Written Comments

Interested persons were invited to submit written comments concerning tentative WDR's as provided through the notification process. Comments were due either in person or by mail to the Executive Office at the Central Valley Water Board at the address on the cover page of this Order.

To be fully responded to by staff and considered by the Central Valley Water Board, the written comments were due at the Central Valley Water Board office by 5:00 p.m. on 23 December 2013.

C. Public Hearing

The Central Valley Water Board held a public hearing on the tentative WDR's during its regular Board meeting on the following date and time and at the following location:

Date: 7 February 2014
Time: 9:00 a.m.

Location: Regional Water Quality Control Board, Central Valley Region
11020 Sun Center Dr., Suite #200
Rancho Cordova, CA 95670

Interested persons were invited to attend. At the public hearing, the Central Valley Water Board heard testimony pertinent to the discharge, WDR's, and permit. For accuracy of the record, important testimony was requested in writing.

D. Reconsideration of Waste Discharge Requirements

Any aggrieved person may petition the State Water Board to review the decision of the Central Valley Water Board regarding the final WDR's. The petition must be received by the State Water Board at the following address within 30 calendar days of the Central Valley Water Board's action:

State Water Resources Control Board
Office of Chief Counsel
P.O. Box 100, 1001 I Street
Sacramento, CA 95812-0100

For instructions on how to file a petition for review, see
http://www.waterboards.ca.gov/public_notices/petitions/water_quality/wqpetition_instr.shtml

E. Information and Copying

The Report of Waste Discharge, other supporting documents, and comments received are on file and may be inspected at the address above at any time between 8:30 a.m. and 4:45 p.m., Monday through Friday. Copying of documents may be arranged through the Central Valley Water Board by calling (916) 464-3291.

F. Register of Interested Persons

Any person interested in being placed on the mailing list for information regarding the WDR's and NPDES permit should contact the Central Valley Water Board, reference this facility, and provide a name, address, and phone number.

G. Additional Information

Requests for additional information or questions regarding this order should be directed to Kari Holmes at (916) 464-4843.

ATTACHMENT G – SUMMARY OF REASONABLE POTENTIAL ANALYSIS FOR CONSTITUENTS OF CONCERN

Constituent	Units	MEC	B	C	CMC	CCC	Water & Org	Org. Only	Basin Plan	MCL	Reasonable Potential
Aluminum, Total Recoverable	µg/L	20[1]	1,263[1]	200	750[2]	--	--	--	--	200	No
Ammonia Nitrogen, Total (as N)	mg/L	30.3	1.74	0.43	2.14[2]	0.43[3]	--	--	--	--	Yes
Barium, Total Recoverable	µg/L	97.5	164	100	--	--	--	--	100	--	No
Chloride	mg/L	1,020	1,520	230	860[2]	230[4]	--	--	--	250	Inconclusive[5]
Chlorpyrifos	µg/L	<0.071	<0.071	0.015	--	--	--	--	0.015	--	No[6]
Copper, Total Recoverable	µg/L	11.4	16[5]	10.4	52[7]/50[8]	30[7]/29[8]	1,300	--	10.4	1,000	Yes
Cyanide, Total (as CN)	µg/L	7.92	21.8	5.2	22	5.2	700	220,000	10	150	Yes
Diazinon	µg/L	<0.065	<0.065	0.10	--	--	--	--	0.10	--	No[6]
Electrical Conductivity @ 25°C	µmhos/cm	2,244[1]	3,518[1]	900	--	--	--	--	--	900	Inconclusive[5]
Iron, Total Recoverable	µg/L	7.55[1]	1,428[1]	300	--	--	--	--	300	300	No
Lead, Total Recoverable	µg/L	5.5	4	16[7]/3.8[8]	406[7]/99[8]	16[7]/3.8[8]	--	--	--	15	Inconclusive[5]
Manganese, Total Recoverable	µg/L	34.4[1]	606[1]	50	--	--	--	--	50	50	No
Mercury, Total Recoverable	µg/L	0.028	<0.05	0.050	--	--	0.050	0.051	--	2	No
Nitrate Nitrogen, Total (as N)	mg/L	8.32	29	10	--	--	10	--	--	10	Yes
Nitrite Nitrogen, Total (as N)	mg/L	1.87	0.43	1.0	--	--	--	--	--	1.0	Yes

Constituent	Units	MEC	B	C	CMC	CCC	Water & Org	Org. Only	Basin Plan	MCL	Reasonable Potential
Selenium, Total Recoverable	µg/L	17.3	3.6	5	20	5	170	4,200	--	50	Inconclusive[5]
Sulfate	mg/L	202[1]	724[1]	250	--	--	--	--	--	250	Inconclusive[5]
Thallium, Total Recoverable	µg/L	13.4	7.1	1.7	--	--	1.7	6.3	--	2	Inconclusive[5]
Total Dissolved Solids	mg/L	1,595[1]	2,361[1]	500	--	--	--	--	--	500	Inconclusive[5]

General Note: All inorganic concentrations are given as a total recoverable.
MEC = Maximum Effluent Concentration
B = Maximum Receiving Water Concentration or lowest detection level, if non-detect
C = Criterion used for Reasonable Potential Analysis
CMC = Criterion Maximum Concentration (CTR or NTR)
CCC = Criterion Continuous Concentration (CTR or NTR)
Water & Org = Human Health Criterion for Consumption of Water & Organisms (CTR or NTR)
Org. Only = Human Health Criterion for Consumption of Organisms Only (CTR or NTR)
Basin Plan = Numeric Site-specific Basin Plan Water Quality Objective
MCL = Drinking Water Standards Maximum Contaminant Level
NA = Not Available
ND = Non-detect

Footnotes:
(1) Represents the maximum observed annual average concentration for comparison with the Secondary MCL.
(2) USEPA National Recommended Ambient Water Quality Criteria, Freshwater Aquatic Life Protection, 1-hour average.
(3) USEPA National Recommended Ambient Water Quality Criteria, Freshwater Aquatic Life Protection, 30-day average.
(4) USEPA National Recommended Ambient Water Quality Criteria, Freshwater Aquatic Life Protection, 4-day average.
(5) See section IV.C.3 of the Fact Sheet (Attachment F) for a discussion of the RPA results.
(6) As discussed further in Section IV.C.3.a of the Fact Sheet (Attachment F), an effluent limitation for diazinon and chlorpyrifos is established in accordance with the Total Maximum Daily Load for the Sacramento-San Joaquin Delta.
(7) Criteria to be compared to the maximum effluent concentration.
(8) Criteria to be compared to the maximum upstream receiving water concentration.

ATTACHMENT H – CALCULATION OF WQBELS MONITORING LOCATION EFF-001

Parameter	Units	Most Stringent Criteria			HH Calculations[1]			Aquatic Life Calculations[1]											Final Effluent Limitations	
		HH	CMC	CCC	ECA_{HH} = $AMEL_{HH}$	AMEL/MDEL $Multiplier_{HH}$	$MDEL_{HH}$	ECA_{acute}	ECA $Multiplier_{acute}$	LTA_{acute}	$ECA_{chronic}$	ECA $Multiplier_{chronic}$	$LTA_{chronic}$	Lowest LTA	AMEL $Multiplier_{95}$	$AMEL_{AL}$	MDEL $Multiplier_{99}$	$MDEL_{AL}$	Lowest AMEL	Lowest MDEL
Ammonia Nitrogen, Total (as N)[2]	mg/L	--	2.14	0.78	--	--	--	2.14	0.1	0.21	1.35	0.37	0.5	0.21	3.19	0.7	10	2.2	0.7	2.2
Copper, Total Recoverable	µg/L	1,000	52	30	1,000	2.0	2,006	52	0.32	17	30	0.53	16	16	1.55	25	3.1	49	25	10[3]
Cyanide, Total (as CN)	µg/L	150	22	5.2	150	2.0	301	22	0.32	7.1	5	0.53	2.7	2.7	1.55	4.3	3.1	8.5	4.3	8.5

1 As described in section IV.C.2.c of the Fact Sheet (Attachment F), calculation of effluent limitations for the protection of human health and aquatic life are determined without the allowance of dilution credits.

2 As discussed in section IV.C.3.c of the Fact Sheet (Attachment F), this Order retains effluent limitations for ammonia from Order R5-2008-0164. For the purposes of displaying the WQBEL calculations, this table shows the WQBEL calculations based on the CMC of 2.14 mg/L and 30-day CCC of 1.35 mg/L used to calculate effluent limitations in Order R5-2008-0164.

3 As discussed in section IV.C.3.c of the Fact Sheet (Attachment F), this Order establishes an MDEL for copper based on the site-specific Basin Plan objective, which is more stringent than the MDEL calculated based on the CTR criteria.