CALIFORNIA REGIONAL WATER QUALITY CONTROL BOARD

CENTRAL VALLEY REGION

11020 Sun Center Drive #200, Rancho Cordova, California 95670-6114
Phone (916) 464-3291 • FAX (916) 464-4645
http://www.waterboards.ca.gov/centralvalley

ORDER NO. R5-2009-XXXX
NPDES NO. CA0081612

WASTE DISCHARGE REQUIREMENTS FOR THE NEVADA COUNTY SANITATION DISTRICT NO.1 LAKE OF THE PINES WASTEWATER TREATMENT PLANT NEVADA COUNTY

The following Discharger is subject to waste discharge requirements as set forth in this Order:

Table 1. Discharger Information

Discharger	Nevada County Sanitation District No. 1
Name of Facility	Lake of the Pines Wastewater Treatment Plant
Facility Address	10903 Riata Way
	Auburn, CA 95602
	Nevada County
The U.S. Environmental Protection Agency (USEPA) and the Regional Water Quality Control Board have classified this discharge as a **minor** discharge.	

The discharge by the Nevada County Sanitation District No. 1 from the discharge points identified below is subject to waste discharge requirements as set forth in this Order:

Table 2. Discharge Location

Discharge Point	Effluent Description	Discharge Point Latitude	Discharge Point Longitude	Receiving Water
001	Treated domestic wastewater	39º 02' 00" N	121º 05' 01" W	Magnolia Creek

Table 3. Administrative Information

This Order was adopted by the Regional Water Quality Control Board on:	**<Adoption Date>**
This Order shall become effective on:	**<Effective Date>**
This Order shall expire on:	**<Expiration Date>**
The Discharger shall file a Report of Waste Discharge in accordance with title 23, California Code of Regulations, as application for issuance of new waste discharge requirements no later than:	**180 days prior to the Order expiration date**

I, PAMELA C. CREEDON, Executive Officer, do hereby certify that this Order with all attachments is a full, true, and correct copy of an Order adopted by the California Regional Water Quality Control Board, Central Valley Region, on **<Adoption Date>**.

_____

PAMELA C. CREEDON, Executive Officer

Table of Contents

I. Facility Information 1
II. Findings 1
III. Discharge Prohibitions 9
IV. Effluent Limitations and Discharge Specifications 10
A. Effluent Limitations – Discharge Point No. 001 10
1. Final Effluent Limitations – Discharge Point No. 001 10
2. Interim Effluent Limitations – Not Applicable 11
B. Land Discharge Specifications – Not Applicable 11
C. Emergency Pond Discharge Specifications – ESP-001 11
D. Reclamation Specifications – PND-001, PND-002, and PND-003 11
V. Receiving Water Limitations 12
A. Surface Water Limitations 12
B. Groundwater Limitations 14
VI. Provisions 14
A. Standard Provisions 14
B. Monitoring and Reporting Program (MRP) Requirements 19
C. Special Provisions 19
1. Reopener Provisions 19
2. Special Studies, Technical Reports and Additional Monitoring Requirements 19
3. Best Management Practices and Pollution Prevention 22
4. Construction, Operation and Maintenance Specifications 22
5. Special Provisions for Municipal Facilities (POTWs Only) 23
6. Other Special Provisions 26
7. Compliance Schedules – Not Applicable 26
VII. Compliance Determination 26

List of Tables

Table 1. Discharger Information ..... Cover
Table 2. Discharge Location ..... Cover
Table 3. Administrative Information ..... Cover
Table 4. Facility Information 1
Table 5. Basin Plan Beneficial Uses 4
Table 6. Effluent Limitations 10
Table 7. Reclamation Pond Specifications 11

List of Attachments

Attachment A – Definitions A-1
Attachment B – Map B-1
Attachment C – Flow Schematic C-1
Attachment D – Standard Provisions D-1
Attachment E – Monitoring and Reporting Program (MRP) E-1
Attachment F – Fact Sheet F-1

I. FACILITY INFORMATION

The following Discharger is subject to waste discharge requirements as set forth in this Order:

Table 4. Facility Information

Discharger	Nevada County Sanitation District No. 1
Name of Facility	Lake of the Pines Wastewater Treatment Plant
Facility Address	10903 Riata Way
	Auburn, CA 95602
	Nevada County
Facility Contact, Title, and Phone	Wayne Robison, Plant Operator, (530) 266-1312
Mailing Address	950 Maidu Avenue, Nevada City, CA 95959
Type of Facility	Publicly Owned Treatment Works
Facility Design Flow	0.72 million gallons per day (MGD) average dry weather flow (ADWF)

II. FINDINGS

The California Regional Water Quality Control Board, Central Valley Region (hereinafter Regional Water Board), finds:

A. Background. Nevada County Sanitation District No. 1 (hereinafter Discharger) is currently discharging pursuant to Order No. R5-2002-0095 and National Pollutant Discharge Elimination System (NPDES) Permit No. CA0081612. The Discharger submitted a Report of Waste Discharge, dated 6 December 2006, and applied for a NPDES permit renewal to discharge up to 0.72 MGD ADWF of treated wastewater from the Lake of the Pines Wastewater Treatment Plant**,** hereinafter Facility. The application was deemed complete on 6 December 2006.

For the purposes of this Order, references to the “discharger” or “permittee” in applicable federal and state laws, regulations, plans, or policy are held to be equivalent to references to the Discharger herein.

B. Facility Description. The Discharger owns and operates a wastewater collection, treatment, and disposal system. The Facility is located on a 105-acre parcel west of the Lake of the Pines community. Attachment B provides a map of the area around the Facility.

The Discharger has constructed new treatment facilities, which were brought on line in April 2008 and were fully operational by June 2008. The new biological treatment system consists of a series of treatment tanks used for biochemical oxygen demand (BOD) reduction, nitrogen removal, phosphorous removal and solids separation. Solids separation is accomplished using a microfiltration membrane bioreactor (MBR) system (0.4 microns pore size) that is immersed in the activated sludge mixed liquor. The MBR

system provides the required tertiary treatment with effluent turbidities less than 1 NTU. The chlorine disinfection system has been replaced by ultraviolet (UV) irradiation. The majority of the old treatment facilities (aerated lagoon, flocculation basin, multimedia filters, chemical feed systems, storage ponds and spray irrigation fields) are no longer integral to the treatment and disposal trains. The aeration basin will be used as an emergency storage basin and the existing storage ponds will be used as onsite reclamation ponds. This Order allows for year-round discharge to Magnolia Creek. Wastewater is discharged from Discharge Point No. 001 (see table on cover page) to Magnolia Creek, a water of the United States, and a tributary to the Bear River within Bear River Hydrologic Unit, Upper Bear Hydrologic Area (HA), and Lake Combie Hydrologic Sub-Area (HSA). Attachment C provides a flow schematic of the new treatment facility.

C. **Legal Authorities.** This Order is issued pursuant to section 402 of the federal Clean Water Act (CWA) and implementing regulations adopted by the U.S. Environmental Protection Agency (USEPA) and chapter 5.5, division 7 of the California Water Code (commencing with section 13370). It shall serve as a NPDES permit for point source discharges from this facility to surface waters. This Order also serves as Waste Discharge Requirements (WDRs) pursuant to article 4, chapter 4, division 7 of the Water Code (commencing with section 13260).

D. **Background and Rationale for Requirements**. The Regional Water Board developed the requirements in this Order based on information submitted as part of the application, through monitoring and reporting programs, and other available information. The Fact Sheet (Attachment F), which contains background information and rationale for Order requirements, is hereby incorporated into this Order and constitutes part of the Findings for this Order. Attachments A through E are also incorporated into this Order.

E. **California Environmental Quality Act (CEQA).** Under Water Code section 13389, this action to adopt an NPDES permit is exempt from the provisions of CEQA, Public Resources Code sections 21100-21177.

F. **Technology-based Effluent Limitations***.* Section 301(b) of the CWA and implementing USEPA permit regulations at section 122.44, title 40 of the Code of Federal Regulations (CFR)[1] require that permits include conditions meeting applicable technology-based requirements at a minimum, and any more stringent effluent limitations necessary to meet applicable water quality standards. The discharge authorized by this Order must meet minimum federal technology-based requirements based on Secondary Treatment Standards at Part 133. A detailed discussion of the technology-based effluent limitations development is included in the Fact Sheet (Attachment F).

G. **Water Quality-based Effluent Limitations.** Section 301(b) of the CWA and section 122.44(d) require that permits include limitations more stringent than applicable federal technology-based requirements where necessary to achieve applicable water quality

1 All further statutory references are to title 40 of the Code of Federal Regulations unless otherwise indicated.

standards. This Order contains requirements, expressed as a technology equivalence requirement, that are necessary to achieve water quality standards. The Regional Water Board has considered the factors listed in CWC Section 13241 in the previous permit in establishing these requirements. The rationale for these requirements, which consist of tertiary treatment or equivalent requirements, is discussed in the Fact Sheet.

Section 122.44(d)(1)(i) mandates that permits include effluent limitations for all pollutants that are or may be discharged at levels that have the reasonable potential to cause or contribute to an exceedance of a water quality standard, including numeric and narrative objectives within a standard. Where reasonable potential has been established for a pollutant, but there is no numeric criterion or objective for the pollutant, water quality-based effluent limitations (WQBELs) must be established using: (1) EPA criteria guidance under CWA section 304(a), supplemented where necessary by other relevant information; (2) an indicator parameter for the pollutant of concern; or (3) a calculated numeric water quality criterion, such as a proposed State criterion or policy interpreting the State's narrative criterion, supplemented with other relevant information, as provided in 40 CFR section 122.44(d)(1)(vi).

H. Water Quality Control Plans. The Regional Water Board adopted a *Water Quality Control Plan, Fourth Edition (Revised October 2007), for the Sacramento and San Joaquin River Basins* (hereinafter Basin Plan) that designates beneficial uses, establishes water quality objectives, and contains implementation programs and policies to achieve those objectives for all waters addressed through the plan. The Basin Plan at page II-2.00 states that the "…*beneficial uses of any specifically identified water body generally apply to its tributary streams*." The Basin Plan does not specifically identify beneficial uses for Magnolia Creek, but does identify present and potential uses for Bear River, to which Magnolia Creek is tributary. These beneficial uses are as follows: municipal and domestic supply; agricultural supply, including stock watering; hydropower generation; water contact recreation, including canoeing and rafting; non-contact water recreation, including aesthetic enjoyment; warm freshwater habitat; cold freshwater habitat; warm migration of aquatic organisms (potential); cold migration of aquatic organisms (potential); warm spawning, reproduction, and/or early development (potential); cold spawning, reproduction, and/or early development (potential); and wildlife habitat.

In addition, the Basin Plan implements State Water Resources Control Board (State Water Board) Resolution No. 88-63, which established state policy that all waters, with certain exceptions, should be considered suitable or potentially suitable for municipal or domestic supply. Thus, as discussed in detail in the Fact Sheet, beneficial uses applicable to Magnolia Creek are as follows:

Table 5. Basin Plan Beneficial Uses

Discharge Point	Receiving Water Name	Beneficial Use(s)
001	Magnolia Creek	Existing: Municipal and domestic supply (MUN); Agricultural supply, including stock watering (AGR); Hydropower generation (POW); Water contact recreation, including canoeing and rafting (REC-1); Non-contact water recreation, including aesthetic enjoyment (REC-2); Warm freshwater habitat (WARM); Cold freshwater habitat (COLD); Wildlife habitat (WILD). Potential: Warm migration of aquatic organisms (MGR); Cold migration of aquatic organisms (MGR); Warm spawning, reproduction, and/or early development (SPWN); and Cold spawning, reproduction, and/or early development (SPWN) Groundwater: Municipal and domestic water supply (MUN), industrial service supply (IND), industrial process supply (PRO), and agricultural supply (AGR).

Requirements of this Order implement the Basin Plan.

I. **National Toxics Rule (NTR) and California Toxics Rule (CTR).** USEPA adopted the NTR on 22 December 1992, and later amended it on 4 May 1995 and 9 November 1999. About 40 criteria in the NTR applied in California. On 18 May 2000, USEPA adopted the CTR. The CTR promulgated new toxics criteria for California and, in addition, incorporated the previously adopted NTR criteria that were applicable in the state. The CTR was amended on 13 February 2001. These rules contain water quality criteria for priority pollutants.

J. **State Implementation Policy.** On 2 March 2000, the State Water Board adopted the *Policy for Implementation of Toxics Standards for Inland Surface Waters, Enclosed Bays, and Estuaries of California* (State Implementation Policy or SIP). The SIP became effective on 28 April 2000 with respect to the priority pollutant criteria promulgated for California by the USEPA through the NTR and to the priority pollutant objectives established by the Regional Water Board in the Basin Plan. The SIP became effective on 18 May 2000 with respect to the priority pollutant criteria promulgated by the USEPA through the CTR. The State Water Board adopted amendments to the SIP on 24 February 2005 that became effective on 13 July 2005. The SIP establishes implementation provisions for priority pollutant criteria and objectives and provisions for chronic toxicity control. Requirements of this Order implement the SIP.

K. **Compliance Schedules and Interim Requirements.** In general, an NPDES permit must include final effluent limitations that are consistent with Clean Water Act section

301 and with 40 CFR 122.44(d). There are exceptions to this general rule. The State Water Board has concluded that where the Regional Water Board's Basin Plan allows for schedules of compliance and the Regional Water Board is newly interpreting a narrative standard, it may include schedules of compliance in the permit to meet effluent limits that implement a narrative standard. See In the Matter of Waste Discharge Requirements for Avon Refinery (State Board Order WQ 2001-06 at pp. 53-55). See also Communities for a Better Environment et al. v. State Water Resources Control Board, 34 Cal.Rptr.3d 396, 410 (2005). The Basin Plan for the Sacramento and San Joaquin Rivers includes a provision that authorizes the use of compliance schedules in NPDES permits for water quality objectives that are adopted after the date of adoption of the Basin Plan, which was 25 September 1995 (See Basin Plan at page IV-16). Consistent with the State Water Board's Order in the CBE matter, the Regional Water Board has the discretion to include compliance schedules in NPDES permits when it is including an effluent limitation that is a "new interpretation" of a narrative water quality objective. This conclusion is also consistent with the United States Environmental Protection Agency policies and administrative decisions. See, e.g., Whole Effluent Toxicity (WET) Control Policy. The Regional Water Board, however, is not required to include a schedule of compliance, but may issue a Time Schedule Order pursuant to Water Code section 13300 or a Cease and Desist Order pursuant to Water Code section 13301 where it finds that the discharger is violating or threatening to violate the permit. The Regional Water Board will consider the merits of each case in determining whether it is appropriate to include a compliance schedule in a permit, and, consistent with the Basin Plan, should consider feasibility of achieving compliance, and must impose a schedule that is as short as practicable to achieve compliance with the objectives, criteria, or effluent limit based on the objective or criteria.

For CTR constituents, Section 2.1 of the SIP provides that, based on a Discharger's request and demonstration that it is infeasible for an existing Discharger to achieve immediate compliance with an effluent limitation derived from a CTR criterion, compliance schedules may be allowed in an NPDES permit. Unless an exception has been granted under section 5.3 of the SIP, a compliance schedule may not exceed 5 years from the date that the permit is issued or reissued, nor may it extend beyond 10 years from the effective date of the SIP (or 18 May 2010) to establish and comply with CTR criterion-based effluent limitations. Where a compliance schedule for a final effluent limitation that exceeds 1 year, the Order must include interim numeric limitations for that constituent or parameter. Where allowed by the Basin Plan, compliance schedules and interim effluent limitations or discharge specifications may also be granted to allow time to implement a new or revised water quality objective. This Order does not include compliance schedules and interim effluent limitations.

L. Alaska Rule. On 30 March 2000, USEPA revised its regulation that specifies when new and revised state and tribal water quality standards (WQS) become effective for CWA purposes. (40 C.F.R. § 131.21; 65 Fed. Reg. 24641 (27 April 2000).) Under the revised regulation (also known as the Alaska rule), new and revised standards submitted to USEPA after 30 May 2000, must be approved by USEPA before being used for CWA purposes. The final rule also provides that standards already in effect

and submitted to USEPA by 30 May 2000 may be used for CWA purposes, whether or not approved by USEPA.

M. Stringency of Requirements for Individual Pollutants. This Order contains both technology-based and water quality-based effluent limitations for individual pollutants. The technology-based effluent limitations consist of restrictions on 5-day biochemical oxygen demand (BOD_5) and total suspended solids (TSS). The WQBELs consist of restrictions on ammonia, pH, nitrate, nitrite, and pathogens. This Order's technology-based pollutant restrictions implement the minimum, applicable federal technology-based requirements. In addition, this Order includes effluent limitations for BOD_5, TSS, and pathogens that are more stringent than applicable federal standards, but that are nonetheless necessary to meet numeric objectives or protect beneficial uses.

WQBELs have been scientifically derived to implement water quality objectives that protect beneficial uses. Both the beneficial uses and the water quality objectives have been approved pursuant to federal law and are the applicable federal water quality standards. To the extent that toxic pollutant WQBELs were derived from the CTR, the CTR is the applicable standard pursuant to 40 CFR section 131.38. The scientific procedures for calculating the individual WQBELs are based on the CTR-SIP, which was approved by USEPA on 1 May 2001. All beneficial uses and water quality objectives contained in the Basin Plan were approved under state law and submitted to and approved by USEPA prior to 30 May 2000. Any water quality objectives and beneficial uses submitted to USEPA prior to 30 May 2000, but not approved by USEPA before that date, are nonetheless "*applicable water quality standards for purposes of the [Clean Water] Act*" pursuant to 40 CFR section 131.21(c)(1). Collectively, this Order's restrictions on individual pollutants are no more stringent than required to implement the technology-based requirements of the CWA and the applicable water quality standards for purposes of the CWA.

N. Antidegradation Policy. Section 131.12 requires that the state water quality standards include an antidegradation policy consistent with the federal policy. The State Water Board established California's antidegradation policy in State Water Board Resolution No. 68-16. Resolution No. 68-16 is consistent with the federal antidegradation policy where the federal policy applies under federal law. Resolution No. 68-16 requires that existing quality of waters be maintained unless degradation is justified based on specific findings. The Regional Water Board's Basin Plan implements, and incorporates by reference, both the state and federal antidegradation policies. As discussed in detail in the Fact Sheet the permitted discharge is consistent with the antidegradation provision of section 131.12 and State Water Board Resolution No. 68-16.

O. Anti-Backsliding Requirements. Sections 402(o)(2) and 303(d)(4) of the CWA and federal regulations at title 40, Code of Federal Regulations section 122.44(l) prohibit backsliding in NPDES permits. These anti-backsliding provisions require effluent limitations in a reissued permit to be as stringent as those in the previous permit, with some exceptions. Some effluent limitations in this Order are less stringent that those in the previous Order. As discussed in detail in the Fact Sheet this relaxation of effluent

limitations is consistent with the anti-backsliding requirements of the CWA and federal regulations.

P. Endangered Species Act. This Order does not authorize any act that results in the taking of a threatened or endangered species or any act that is now prohibited, or becomes prohibited in the future, under either the California Endangered Species Act (Fish and Game Code sections 2050 to 2097) or the Federal Endangered Species Act (16 U.S.C.A. sections 1531 to 1544). This Order requires compliance with effluent limits, receiving water limits, and other requirements to protect the beneficial uses of waters of the state. The Discharger is responsible for meeting all requirements of the applicable Endangered Species Act.

Q. Monitoring and Reporting. Section 122.48 requires that all NPDES permits specify requirements for recording and reporting monitoring results. Water Code sections 13267 and 13383 authorizes the Regional Water Board to require technical and monitoring reports. The Monitoring and Reporting Program establishes monitoring and reporting requirements to implement federal and State requirements. This Monitoring and Reporting Program is provided in Attachment E.

R. Standard and Special Provisions. Standard Provisions, which apply to all NPDES permits in accordance with section 122.41, and additional conditions applicable to specified categories of permits in accordance with section 122.42, are provided in Attachment D. The discharger must comply with all standard provisions and with those additional conditions that are applicable under section 122.42. The Regional Water Board has also included in this Order special provisions applicable to the Discharger. A rationale for the special provisions contained in this Order is provided in the attached Fact Sheet.

S. Provisions and Requirements Implementing State Law. The provisions/requirements in subsections IV.C, IV.D, V.B, and VI.C of this Order are included to implement state law only. These provisions/requirements are not required or authorized under the federal CWA; consequently, violations of these provisions/requirements are not subject to the enforcement remedies that are available for NPDES violations.

T. Notification of Interested Parties. The Regional Water Board has notified the Discharger and interested agencies and persons of its intent to prescribe Waste Discharge Requirements for the discharge and has provided them with an opportunity to submit their written comments and recommendations. Details of notification are provided in the Fact Sheet of this Order.

U. Consideration of Public Comment. The Regional Water Board, in a public meeting, heard and considered all comments pertaining to the discharge. Details of the Public Hearing are provided in the Fact Sheet of this Order.

THEREFORE, IT IS HEREBY ORDERED, that Order No. R5-2002-0095 is rescinded upon the effective date of this Order except for enforcement purposes, and, in order to meet the provisions contained in division 7 of the Water Code (commencing with section 13000) and regulations adopted thereunder, and the provisions of the federal Clean Water Act (CWA) and regulations and guidelines adopted thereunder, the Discharger shall comply with the requirements in this Order.

III. DISCHARGE PROHIBITIONS

A. Discharge of wastewater at a location or in a manner different from that described in the Findings is prohibited.

B. The by-pass or overflow of wastes to surface waters is prohibited, except as allowed by Federal Standard Provisions I.G. and I.H. (Attachment D).

C. Discharge of wastewater containing chlorine to surface waters is prohibited.

D. Neither the discharge nor its treatment shall create a nuisance as defined in Section 13050 of the California Water Code.

E. The Discharger shall not allow pollutant-free wastewater to be discharged into the collection, treatment, and disposal system in amounts that significantly diminish the system's capability to comply with this Order. Pollutant-free wastewater means rainfall, groundwater, cooling waters, and condensates that are essentially free of pollutants.

F. The Discharger shall not bypass the ultraviolet (UV) disinfection system prior to discharge to the receiving water except as allowed by Federal Standard Provisions I.G. (Attachment D). "Bypass" for preventative or operational maintenance is not allowed unless it meets the conditions of Section I.G.3 (Attachment D.)

IV. EFFLUENT LIMITATIONS AND DISCHARGE SPECIFICATIONS

A. Effluent Limitations – Discharge Point No. 001

1. Final Effluent Limitations – Discharge Point No. 001

The Discharger shall maintain compliance with the following effluent limitations at Discharge Point No. 001, with compliance measured at Monitoring Location EFF-001 as described in the attached MRP (Attachment E):

a. The Discharger shall maintain compliance with the effluent limitations specified in Table 6:

Table 6. Effluent Limitations

Parameter	Units	Effluent Limitations				
		Average Monthly	Average Weekly	Maximum Daily	Instantaneous Minimum	Instantaneous Maximum
Biochemical Oxygen Demand (5-day @ 20°C)	mg/L	10	15	30	--	--
	lbs/day[1]	60	90	180	--	--
Total Suspended Solids	mg/L	10	15	30	--	--
	lbs/day[1]	60	90	180	--	--
pH	Standard Units	--	--	--	6.5	8.0
Ammonia, Nitrogen, Total (as N)	mg/L	2.5	--	5.6	--	--
	lbs/day[1]	15	--	34	--	--
Nitrite + Nitrate Nitrogen, Total (as N)	mg/L	10	--	--	--	--
	lbs/day[1]	60	--	--	--	--
Nitrite Nitrogen, Total (as N)	mg/L	1	--	--	--	--
	lbs/day[1]	6	--	--	--	--

[1] Based on the treatment design flow of 0.72 MGD.

a. **Percent Removal:** The average monthly percent removal of BOD_5 and TSS shall not be less than 85 percent.

b. **Acute Whole Effluent Toxicity.** Survival of aquatic organisms in 96-hour bioassays of undiluted waste shall be no less than:

   i. 70%, minimum for any one bioassay; and
   ii. 90%, median for any three consecutive bioassays.

c. **Total Coliform Organisms.** Effluent total coliform organisms shall not exceed:

   i. 2.2 most probable number (MPN) per 100 mL, as a 7-day median; and
   ii. 23 MPN/100 mL, more than once in any 30-day period.

d. **Average Dry Weather Flow.** The average dry weather flow shall not exceed 0.72 MGD.

2. Interim Effluent Limitations – Not Applicable

B. Land Discharge Specifications – Not Applicable

C. Emergency Pond Discharge Specifications – ESP-001

1. The emergency storage pond shall be used only to prevent discharge of wastewater that does not meet effluent limits, to store partially treated wastewater, or to prevent upsets by diverting influent that would be harmful to the treatment process.

2. Freeboard in the emergency storage pond shall not be less than 2 feet (measured vertically to the lowest point of overflow), except if lesser freeboard does not threaten the integrity of the pond, no overflow of the pond occurs, and lesser freeboard is due to direct precipitation or storm water runoff occurring as a result of annual precipitation with greater than a 100-year recurrence interval, or a storm event with an intensity greater than a 25-year, 24-hour storm event.

3. The Discharger shall monitor use of the emergency storage pond and shall record the following when wastewater is directed to the pond. The monitoring shall be submitted with the monthly self-monitoring reports required in Section XI.B. of the Monitoring and Reporting Program.

4. Wastewater contained in the emergency storage pond must meet all effluent limitations prior to discharge to Magnolia Creek.

D. Reclamation Specifications – PND-001, PND-002, and PND-003

1. The Discharger shall maintain compliance with the following limitations when effluent is diverted to the on site reclamation ponds to maintain water levels and habitat.

Table 7. Reclamation Pond Specifications

Parameter	Units	Discharge Specifications		
		Average Monthly	Median Monthly	Maximum Daily
Biochemical Oxygen Demand (5-day @ 20°C)	mg/L	10	--	30
Total Suspended Solids	mg/L	10	--	30
Total Coliform Organisms	MPN/100 mL	--	2.2	23

2. The storage or use of reclaimed water shall not result in a pollution or nuisance, or adversely affect water quality, as defined by the CWC.

3. Freeboard in the reclamation ponds shall not be less than 2 feet (measured vertically to the lowest point of overflow), except if lesser freeboard does not threaten the integrity of the pond, no overflow of the pond occurs, and lesser freeboard is due to

direct precipitation or storm water runoff occurring as a result of annual precipitation with greater than a 100-year recurrence interval, or a storm event with an intensity greater than a 25-year, 24-hour storm event.

4. The Discharger shall ensure that signs with proper wording of sufficient size shall be placed at the on site ponds to alert the public of the use of reclaimed water.

5. The on site ponds shall be managed to prevent the breeding of mosquitoes.

6. On site landscape irrigation water shall only come from the on site reclamation ponds.

V. RECEIVING WATER LIMITATIONS

A. Surface Water Limitations

Receiving water limitations are based on water quality objectives contained in the Basin Plan and are a required part of this Order. The discharge shall not cause the following in Magnolia Creek:

1. **Bacteria**. The fecal coliform concentration, based on a minimum of not less than five samples for any 30-day period, to exceed a geometric mean of 200 MPN/100 mL, nor more than ten percent of the total number of fecal coliform samples taken during any 30-day period to exceed 400 MPN/100 mL.

2. **Biostimulatory Substances**. Water to contain biostimulatory substances which promote aquatic growths in concentrations that cause nuisance or adversely affect beneficial uses.

3. **Chemical Constituents**. Chemical constituents to be present in concentrations that adversely affect beneficial uses.

4. **Color**. Discoloration that causes nuisance or adversely affects beneficial uses.

5. **Dissolved Oxygen**:

   a. The monthly median of the mean daily dissolved oxygen concentration to fall below 85 percent of saturation in the main water mass;
   b. The 95 percentile dissolved oxygen concentration to fall below 75 percent of saturation; nor
   c. The dissolved oxygen concentration to be reduced below 7.0 mg/L at any time.

6. **Floating Material**. Floating material to be present in amounts that cause nuisance or adversely affect beneficial uses.

7. **Oil and Grease**. Oils, greases, waxes, or other materials to be present in concentrations that cause nuisance, result in a visible film or coating on the surface of the water or on objects in the water, or otherwise adversely affect beneficial uses.

8. **pH**. The pH to be depressed below 6.5, raised above 8.5, nor changed by more than 0.5 units on an annual average basis.

9. **Pesticides**:

   a. Pesticides to be present, individually or in combination, in concentrations that adversely affect beneficial uses;
   b. Pesticides to be present in bottom sediments or aquatic life in concentrations that adversely affect beneficial uses;
   c. Total identifiable persistent chlorinated hydrocarbon pesticides to be present in the water column at concentrations detectable within the accuracy of analytical methods approved by USEPA or the Executive Officer;
   d. Pesticide concentrations to exceed those allowable by applicable antidegradation policies (see State Water Board Resolution No. 68-16 and 40 CFR §131.12.);
   e. Pesticide concentrations to exceed the lowest levels technically and economically achievable;
   f. Pesticides to be present in concentration in excess of the maximum contaminant levels set forth in California Code of Regulations, Title 22, Division 4, Chapter 15; nor
   g. Thiobencarb to be present in excess of 1.0 µg/L.

10. **Radioactivity**:

    a. Radionuclides to be present in concentrations that are harmful to human, plant, animal, or aquatic life nor that result in the accumulation of radionuclides in the food web to an extent that presents a hazard to human, plant, animal, or aquatic life.
    b. Radionuclides to be present in excess of the maximum contaminant levels specified in Table 4 (MCL Radioactivity) of Section 64443 of Title 22 of the California Code of Regulations.

11. **Suspended Sediments**. The suspended sediment load and suspended sediment discharge rate of surface waters to be altered in such a manner as to cause nuisance or adversely affect beneficial uses.

12. **Settleable Substances**. Substances to be present in concentrations that result in the deposition of material that causes nuisance or adversely affects beneficial uses.

13. **Suspended Material**. Suspended material to be present in concentrations that cause nuisance or adversely affect beneficial uses.

14. **Taste and Odors**. Taste- or odor-producing substances to be present in concentrations that impart undesirable tastes or odors to fish flesh or other edible

products of aquatic origin, or that cause nuisance, or otherwise adversely affect beneficial uses**.**

15. **Temperature**. The natural temperature to be increased by more than 5°F.

16. **Toxicity**. Toxic substances to be present, individually or in combination, in concentrations that produce detrimental physiological responses in human, plant, animal, or aquatic life.

17. **Turbidity**. The turbidity to increase as follows:

    a. More than 1 Nephelometric Turbidity Unit (NTU) where natural turbidity is between 0 and 5 NTUs.
    b. More than 20 percent where natural turbidity is between 5 and 50 NTUs.
    c. More than 10 NTU where natural turbidity is between 50 and 100 NTUs.
    d. More than 10 percent where natural turbidity is greater than 100 NTUs.

    When wastewater is treated to a tertiary level or equivalent, a 1-month averaging period may be used when determining compliance with this Receiving Surface Water Limitation for turbidity.

B. Groundwater Limitations

1. The discharge shall not cause the groundwater to exceed water quality objectives, unreasonably affect beneficial uses, or cause a condition of pollution or nuisance.

VI. PROVISIONS

A. Standard Provisions

1. The Discharger shall comply with all Standard Provisions included in Attachment D of this Order.

2. The Discharger shall comply with the following provisions:

    a. If the Discharger's wastewater treatment plant is publicly owned or subject to regulation by California Public Utilities Commission, it shall be supervised and operated by persons possessing certificates of appropriate grade according to Title 23, CCR, Division 3, Chapter 26.

    b. After notice and opportunity for a hearing, this Order may be terminated or modified for cause, including, but not limited to:

        i. violation of any term or condition contained in this Order;

        ii. obtaining this Order by misrepresentation or by failing to disclose fully all relevant facts;

iii. a change in any condition that requires either a temporary or permanent reduction or elimination of the authorized discharge; and

iv. a material change in the character, location, or volume of discharge.

The causes for modification include:

- *New regulations.* New regulations have been promulgated under Section 405(d) of the Clean Water Act, or the standards or regulations on which the permit was based have been changed by promulgation of amended standards or regulations or by judicial decision after the permit was issued.

- *Land application plans.* When required by a permit condition to incorporate a land application plan for beneficial reuse of sewage sludge, to revise an existing land application plan, or to add a land application plan.

- *Change in sludge use or disposal practice.* Under 40 Code of Federal Regulations (CFR) 122.62(a)(1), a change in the Discharger's sludge use or disposal practice is a cause for modification of the permit. It is cause for revocation and reissuance if the Discharger requests or agrees.

The Regional Water Board may review and revise this Order at any time upon application of any affected person or the Regional Water Board's own motion.

c. If a toxic effluent standard or prohibition (including any scheduled compliance specified in such effluent standard or prohibition) is established under Section 307(a) of the CWA, or amendments thereto, for a toxic pollutant that is present in the discharge authorized herein, and such standard or prohibition is more stringent than any limitation upon such pollutant in this Order, the Regional Water Board will revise or modify this Order in accordance with such toxic effluent standard or prohibition.

The Discharger shall comply with effluent standards and prohibitions within the time provided in the regulations that establish those standards or prohibitions, even if this Order has not yet been modified.

d. This Order shall be modified, or alternately revoked and reissued, to comply with any applicable effluent standard or limitation issued or approved under Sections 301(b)(2)(C) and (D), 304(b)(2), and 307(a)(2) of the CWA, if the effluent standard or limitation so issued or approved:

i. contains different conditions or is otherwise more stringent than any effluent limitation in the Order; or

ii. controls any pollutant limited in the Order.

The Order, as modified or reissued under this paragraph, shall also contain any other requirements of the CWA then applicable.

e. The provisions of this Order are severable. If any provision of this Order is found invalid, the remainder of this Order shall not be affected.

f. The Discharger shall take all reasonable steps to minimize any adverse effects to waters of the State or users of those waters resulting from any discharge or sludge use or disposal in violation of this Order. Reasonable steps shall include such accelerated or additional monitoring as necessary to determine the nature and impact of the non-complying discharge or sludge use or disposal.

g. The Discharger shall ensure compliance with any existing or future pretreatment standard promulgated by USEPA under Section 307 of the CWA, or amendment thereto, for any discharge to the municipal system.

h. The discharge of any radiological, chemical or biological warfare agent or high-level, radiological waste is prohibited.

i. A copy of this Order shall be maintained at the discharge facility and be available at all times to operating personnel. Key operating personnel shall be familiar with its content.

j. Safeguard to electric power failure:

    i. The Discharger shall provide safeguards to assure that, should there be reduction, loss, or failure of electric power, the discharge shall comply with the terms and conditions of this Order.

    ii. Upon written request by the Regional Water Board the Discharger shall submit a written description of safeguards. Such safeguards may include alternate power sources, standby generators, retention capacity, operating procedures, or other means. A description of the safeguards provided shall include an analysis of the frequency, duration, and impact of power failures experienced over the past five years on effluent quality and on the capability of the Discharger to comply with the terms and conditions of the Order. The adequacy of the safeguards is subject to the approval of the Regional Water Board.

    iii. Should the treatment works not include safeguards against reduction, loss, or failure of electric power, or should the Regional Water Board not approve the existing safeguards, the Discharger shall, within ninety days of having been advised in writing by the Regional Water Board that the existing safeguards are inadequate, provide to the Regional Water Board and USEPA a schedule of compliance for providing safeguards such that in the event of reduction, loss, or failure of electric power, the Discharger shall comply with the terms and conditions of this Order. The schedule of compliance shall, upon approval of the Regional Water Board, become a condition of this Order.

k. The Discharger, upon written request of the Regional Water Board, shall file with the Board a technical report on its preventive (failsafe) and contingency (cleanup)

plans for controlling accidental discharges, and for minimizing the effect of such events. This report may be combined with that required under Regional Water Board Standard Provision VI.A.2.m.

The technical report shall:

i. Identify the possible sources of spills, leaks, untreated waste by-pass, and contaminated drainage. Loading and storage areas, power outage, waste treatment unit outage, and failure of process equipment, tanks and pipes should be considered.

ii. Evaluate the effectiveness of present facilities and procedures and state when they became operational.

iii. Predict the effectiveness of the proposed facilities and procedures and provide an implementation schedule containing interim and final dates when they will be constructed, implemented, or operational.

The Regional Water Board, after review of the technical report, may establish conditions which it deems necessary to control accidental discharges and to minimize the effects of such events. Such conditions shall be incorporated as part of this Order, upon notice to the Discharger.

l. A publicly owned treatment works whose waste flow has been increasing, or is projected to increase, shall estimate when flows will reach hydraulic and treatment capacities of its treatment and disposal facilities. The projections shall be made in January, based on the last 3 years' average dry weather flows, peak wet weather flows and total annual flows, as appropriate. When any projection shows that capacity of any part of the facilities may be exceeded in 4 years, the Discharger shall notify the Regional Water Board by 31 January. A copy of the notification shall be sent to appropriate local elected officials, local permitting agencies and the press. Within 120 days of the notification, the Discharger shall submit a technical report showing how it will prevent flow volumes from exceeding capacity or how it will increase capacity to handle the larger flows. The Regional Water Board may extend the time for submitting the report.

m. The Discharger shall submit technical reports as directed by the Executive Officer. All technical reports required herein that involve planning, investigation, evaluation, or design, or other work requiring interpretation and proper application of engineering or geologic sciences, shall be prepared by or under the direction of persons registered to practice in California pursuant to California Business and Professions Code, sections 6735, 7835, and 7835.1. To demonstrate compliance with Title 16, CCR, sections 415 and 3065, all technical reports must contain a statement of the qualifications of the responsible registered professional(s). As required by these laws, completed technical reports must bear the signature(s) and seal(s) of the registered professional(s) in a manner such that all work can be clearly attributed to the professional responsible for the work.

n. Laboratories that perform sample analyses must be identified in all monitoring reports submitted to the Regional Water Board and USEPA.

o. The Discharger shall conduct analysis on any sample provided by USEPA as part of the Discharge Monitoring Quality Assurance (DMQA) program. The results of any such analysis shall be submitted to USEPA's DMQA manager.

p. Effluent samples shall be taken downstream of the last addition of wastes to the treatment or discharge works where a representative sample may be obtained prior to mixing with the receiving waters. Samples shall be collected at such a point and in such a manner to ensure a representative sample of the discharge.

q. All monitoring and analysis instruments and devices used by the Discharger to fulfill the prescribed monitoring program shall be properly maintained and calibrated as necessary, at least yearly, to ensure their continued accuracy.

r. The Discharger shall file with the Regional Water Board technical reports on self-monitoring performed according to the detailed specifications contained in the Monitoring and Reporting Program attached to this Order.

s. The results of all monitoring required by this Order shall be reported to the Regional Water Board, and shall be submitted in such a format as to allow direct comparison with the limitations and requirements of this Order. Unless otherwise specified, discharge flows shall be reported in terms of the monthly average and the daily maximum discharge flows.

t. The Regional Water Board is authorized to enforce the terms of this permit under several provisions of the CWC, including, but not limited to, sections 13385, 13386, and 13387.

u. For POTWs, prior to making any change in the point of discharge, place of use, or purpose of use of treated wastewater that results in a decrease of flow in any portion of a watercourse, the Discharger must file a petition with the State Water Board, Division of Water Rights, and receive approval for such a change. (CWC section 1211).

v. In the event the Discharger does not comply or will be unable to comply for any reason, with any prohibition, maximum daily effluent limitation, 1-hour average effluent limitation, or receiving water limitation contained in this Order, the Discharger shall notify the Regional Water Board by telephone (916) 464-3291 within 24 hours of having knowledge of such noncompliance, and shall confirm this notification in writing within five days, unless the Regional Water Board waives confirmation. The written notification shall include the information required by Attachment D, Section V.E.1 [40 CFR section 122.41(l)(6)(i)].

B. Monitoring and Reporting Program (MRP) Requirements

1. The Discharger shall comply with the MRP, and future revisions thereto, in Attachment E of this Order.

C. Special Provisions

1. Reopener Provisions

a. This Order may be reopened for modification, or revocation and reissuance, as a result of the detection of a reportable priority pollutant generated by special conditions included in this Order. These special conditions may be, but are not limited to, fish tissue sampling, whole effluent toxicity, monitoring requirements on internal waste stream(s), and monitoring for surrogate parameters. Additional requirements may be included in this Order as a result of the special condition monitoring data.

b. Conditions that necessitate a major modification of a permit are described in 40 CFR section 122.62, including:

   i. If new or amended applicable water quality standards are promulgated or approved pursuant to Section 303 of the CWA, or amendments thereto, this permit may be reopened and modified in accordance with the new or amended standards.

   ii. When new information, that was not available at the time of permit issuance, would have justified different permit conditions at the time of issuance.

c. **Whole Effluent Toxicity.** As a result of a Toxicity Reduction Evaluation (TRE), this Order may be reopened to include a chronic toxicity limitation, a new acute toxicity limitation, and/or a limitation for a specific toxicant identified in the TRE. Additionally, if the State Water Board revises the SIP's toxicity control provisions that would require the establishment of numeric chronic toxicity effluent limitations, this Order may be reopened to include a numeric chronic toxicity effluent limitation based on the new provisions.

2. Special Studies, Technical Reports and Additional Monitoring Requirements

a. **Chronic Whole Effluent Toxicity.** For compliance with the Basin Plan's narrative toxicity objective, this Order requires the Discharger to conduct chronic whole effluent toxicity testing, as specified in the Monitoring and Reporting Program (Attachment E, Section V.). Furthermore, this Provision requires the Discharger to investigate the causes of, and identify corrective actions to reduce or eliminate effluent toxicity. If the discharge exceeds the toxicity numeric monitoring trigger established in this Provision, the Discharger is required to

initiate a Toxicity Reduction Evaluation (TRE), in accordance with an approved TRE Work Plan, and take actions to mitigate the impact of the discharge and prevent reoccurrence of toxicity. A TRE is a site-specific study conducted in a stepwise process to identify the source(s) of toxicity and the effective control measures for effluent toxicity. TREs are designed to identify the causative agents and sources of whole effluent toxicity, evaluate the effectiveness of the toxicity control options, and confirm the reduction in effluent toxicity. This Provision includes requirements for the Discharger to develop and submit a TRE Work Plan and includes procedures for accelerated chronic toxicity monitoring and TRE initiation.

i. **Initial Investigative Toxicity Reduction Evaluation (TRE) Work Plan. Within 90 days of the effective date of this Order,** the Discharger shall submit to the Regional Water Board an Initial Investigative TRE Work Plan for approval by the Executive Officer. This should be a one to two page document including, at minimum:

   a) A description of the investigation and evaluation techniques that will be used to identify potential causes and sources of effluent toxicity, effluent variability, and treatment system efficiency;

   b) A description of the facility's methods of maximizing in-house treatment efficiency and good housekeeping practices, and a list of all chemicals used in operation of the facility; and

   c) A discussion of who will conduct the Toxicity Identification Evaluation, if necessary (i.e. an in-house expert or outside contractor).

ii. **Accelerated Monitoring and TRE Initiation.** When the numeric toxicity monitoring trigger is exceeded during regular chronic toxicity monitoring, and the testing meets all test acceptability criteria, the Discharger shall initiate accelerated monitoring as required in the Accelerated Monitoring Specifications. WET testing results exceeding the monitoring trigger during accelerated monitoring demonstrates a pattern of toxicity and requires the Discharger to initiate a TRE to address the effluent toxicity.

iii. **Numeric Monitoring Trigger.** The numeric toxicity monitoring trigger is > **1 TUc** (where TUc = 100/NOEC). The monitoring trigger is not an effluent limitation; it is the toxicity threshold at which the Discharger is required to begin accelerated monitoring and initiate a TRE when the effluent exhibits a pattern of toxicity.

iv. **Accelerated Monitoring Specifications.** If the numeric toxicity monitoring trigger is exceeded during regular chronic toxicity testing, within 14-days of notification by the laboratory of the test results, the Discharger shall initiate accelerated monitoring. Accelerated monitoring shall consist of four (4) chronic toxicity tests in a 6-week period (i.e. one test every 2 weeks) using

the species that exhibited toxicity. The following protocol shall be used for accelerated monitoring and TRE initiation:

a) If the results of four (4) consecutive accelerated monitoring tests do not exceed the monitoring trigger, the Discharger may cease accelerated monitoring and resume regular chronic toxicity monitoring. However, notwithstanding the accelerated monitoring results, if there is adequate evidence of a pattern of effluent toxicity, the Executive Officer may require that the Discharger initiate a TRE.

b) If the source(s) of the toxicity is easily identified (i.e. temporary plant upset), the Discharger shall make necessary corrections to the facility and shall continue accelerated monitoring until four (4) consecutive accelerated tests do not exceed the monitoring trigger. Upon confirmation that the effluent toxicity has been removed, the Discharger may cease accelerated monitoring and resume regular chronic toxicity monitoring.

c) If the result of any accelerated toxicity test exceeds the monitoring trigger, and the source(s) of the toxicity are not easily identified as described in item b of this subsection, the Discharger shall cease accelerated monitoring and initiate a TRE to investigate the cause(s) of, and identify corrective actions to reduce or eliminate effluent toxicity. Within thirty (30) days of notification by the laboratory of the test results exceeding the monitoring trigger during accelerated monitoring, the Discharger shall submit a TRE Action Plan to the Regional Water Board including, at minimum:

   1) Specific actions the Discharger will take to investigate and identify the cause(s) of toxicity, including TRE WET monitoring schedule;

   2) Specific actions the Discharger will take to mitigate the impact of the discharge and prevent the recurrence of toxicity; and

   3) A schedule for these actions.

   Within sixty (60) days of notification by the laboratory of the test results, the Discharger shall submit to the Regional Water Board a TRE Work Plan for approval by the Executive Officer. The TRE Work Plan shall outline the procedures for identifying the source(s) of, and reducing or eliminating effluent toxicity. The TRE Work Plan must be developed in accordance with EPA guidance[1].

b. **Reuse of Municipal Wastewater Feasibility Study:** The Discharger shall evaluate the feasibility of utilizing reclaimed municipal wastewater from the new treatment facility for beneficial reuse to reduce area dependence on existing surface and groundwater water supply sources. A report containing the study conclusions of feasible wastewater reuse alternatives shall be

1 See Attachment F (Fact Sheet) Section VII.B.2.a. for a list of EPA guidance documents that must be considered in development of the TRE Workplan.

completed and submitted **within 12 months of the adoption date of this Order** for approval by the Executive Officer.

3. Best Management Practices and Pollution Prevention

a. **Salinity Evaluation and Minimization Plan.** The Discharger shall prepare and implement a salinity evaluation and minimization plan to address sources of salinity from the municipal wastewater treatment system. The plan shall be completed and submitted to the Regional Water Board **within 12 months of the effective date of this Order** for approval by the Executive Officer.

4. Construction, Operation and Maintenance Specifications

a. The treatment facilities shall be designed, constructed, operated, and maintained to prevent inundation or washout due to floods with a 100-year return frequency.

b. Public contact with wastewater shall be precluded through such means as fences, signs, and other acceptable alternatives.

c. Objectionable odors originating at this Facility shall not be perceivable beyond the limits of the property owned by the Discharger.

d. Ultraviolet Disinfection (UV) System Operating Specifications

The Discharger shall operate the UV disinfection system to provide a minimum UV dose per bank of 100 millijoules per square centimeter (mJ/cm^2) at peak daily flow, unless otherwise approved by the California Department of Public Health (DPH; formerly the Department of Health Services), and shall maintain an adequate dose for disinfection while discharging to Magnolia Creek, unless otherwise approved by DPH.

i. The Discharger shall provide continuous, reliable monitoring of flow, UV transmittance, UV power, and turbidity.

ii. The Discharger shall operate the treatment system to insure that turbidity prior to disinfection shall not exceed 2 NTU as a daily average, 5 NTU more than 5% of the time within a 24-hour period, and 10 NTU, at any time.

iii. The UV transmittance (at 254 nanometers) in the wastewater exiting the UV disinfection system shall not fall below 55 percent of maximum at any time.

iv. The quartz sleeves and cleaning system components must be visually inspected per the manufacturer's operations manual for physical wear (scoring, solarization, seal leaks, cleaning fluid levels, etc.) and to check the efficacy of the cleaning system.

v. The lamp sleeves must be cleaned periodically as necessary to meet the requirements.

vi. Lamps must be replaced per the manufacturer's operations manual, or sooner, if there are indications the lamps are failing to provide adequate disinfection. Lamp age and lamp replacement records must be maintained.

vii. The Facility must be operated in accordance with an operations and maintenance program that assures adequate disinfection.

5. Special Provisions for Municipal Facilities (POTWs Only)

a. **Pretreatment Requirements.**

i. The Discharger shall implement, as more completely set forth in 40 CFR 403.5, the necessary legal authorities, programs, and controls to ensure that the following incompatible wastes are not introduced to the treatment system, where incompatible wastes are:

a) Wastes which create a fire or explosion hazard in the treatment works;

b) Wastes which will cause corrosive structural damage to treatment works, but in no case wastes with a pH lower than 5.0, unless the works is specially designed to accommodate such wastes;

c) Solid or viscous wastes in amounts which cause obstruction to flow in sewers, or which cause other interference with proper operation or treatment works;

d) Any waste, including oxygen demanding pollutants (BOD, *etc*.), released in such volume or strength as to cause inhibition or disruption in the treatment works, and subsequent treatment process upset and loss of treatment efficiency;

e) Heat in amounts that inhibit or disrupt biological activity in the treatment works, or that raise influent temperatures above 40°C (104°F), unless the Regional Water Board approves alternate temperature limits;

f) Petroleum oil, non-biodegradable cutting oil, or products of mineral oil origin in amounts that will cause interference or pass through;

g) Pollutants which result in the presence of toxic gases, vapors, or fumes within the treatment works in a quantity that may cause acute worker health and safety problems; and:

h) Any trucked or hauled pollutants, except at points predesignated by the Discharger.

ii. The Discharger shall implement, as more completely set forth in 40 CFR 403.5, the legal authorities, programs, and controls necessary to ensure that indirect discharges do not introduce pollutants into the sewerage system that, either alone or in conjunction with a discharge or discharges from other sources:

a) Flow through the system to the receiving water in quantities or concentrations that cause a violation of this Order, or:

b) Inhibit or disrupt treatment processes, treatment system operations, or sludge processes, use, or disposal and either cause a violation of this Order or prevent sludge use or disposal in accordance with this Order.

b. **Sludge/Biosolids Discharge Specifications**

i. Collected screenings, residual sludge, biosolids, and other solids removed from liquid wastes shall be disposed of in a manner approved by the Executive Officer, and consistent with *Consolidated Regulations for Treatment, Storage, Processing, or Disposal of Solid Waste,* as set forth in Title 27, CCR, Division 2, Subdivision 1, section 20005, et seq. Removal for further treatment, disposal, or reuse at sites (i.e., landfill, composting sites, soil amendment sites) that are operated in accordance with valid waste discharge requirements issued by a regional water quality control board will satisfy these specifications.

ii. Sludge and solid waste shall be removed from screens, sumps, ponds, clarifiers, etc. as needed to ensure optimal plant performance.

iii. The treatment of sludge generated at the Facility shall be confined to the Facility property and conducted in a manner that precludes infiltration of waste constituents into soils in a mass or concentration that will violate Groundwater Limitations V.B. In addition, the storage of residual sludge, solid waste, and biosolids on Facility property shall be temporary and controlled, and contained in a manner that minimizes leachate formation and precludes infiltration of waste constituents into soils in a mass or concentration that will violate Groundwater Limitations V.B.

iv. The use and disposal of biosolids shall comply with existing Federal and State laws and regulations, including permitting requirements and technical standards included in 40 CFR 503. If the State Water Board and the Regional Water Board are given the authority to implement regulations contained in 40 CFR 503, this Order may be reopened to incorporate appropriate time schedules and technical standards. The Discharger must comply with the standards and time schedules contained in 40 CFR 503 whether or not they have been incorporated into this Order.

c. **Biosolids Disposal Requirements**

i. The Discharger shall comply with the Monitoring and Reporting Program for biosolids disposal contained in Attachment E.

ii. Any proposed change in biosolids use or disposal practice from a previously approved practice shall be reported to the Executive Officer and U.S. EPA Regional Administrator at least **90 days** in advance of the change.

iii. The Discharger is encouraged to comply with the "Manual of Good Practice for Agricultural Land Application of Biosolids" developed by the California Water Environment Association.

d. **Biosolids Storage Requirements**

i. Facilities for the storage of Class B biosolids shall be located, designed and maintained to restrict public access to biosolids.

ii. Biosolids storage facilities shall be designed and maintained to prevent washout or inundation from a storm or flood with a return frequency of 100 years.

iii. Biosolids storage facilities, which contain biosolids, shall be designed and maintained to contain all storm water falling on the biosolids storage area during a rainfall year with a return frequency of 100 years.

iv. Biosolids storage facilities shall be designed, maintained and operated to minimize the generation of leachate.

e. **Collection System.** On 2 May 2006, the State Water Board adopted State Water Board Order 2006-0003, a Statewide General WDR for Sanitary Sewer Systems. The Discharger shall be subject to the requirements of Order 2006-0003 and any future revisions thereto. Order 2006-0003 requires that all public agencies that currently own or operate sanitary sewer systems apply for coverage under the General WDR. By 2 November 2006**,** the Discharger is required by that Order, not incorporated by reference herein, to apply for coverage under State Water Board Order 2006-0003 for operation of its wastewater collection system.

Regardless of the coverage obtained under Order 2006-0003, the Discharger's collection system is part of the treatment system that is subject to this Order. As such, pursuant to federal regulations, the Discharger must properly operate and maintain its collection system [40 CFR section 122.41(e)], report any non-compliance [40 CFR section 122.41(l)(6) and (7)], and mitigate any discharge from the collection system in violation of this Order [40 CFR. section 122.41(d)].

f. This permit, and the Monitoring and Reporting Program which is a part of this permit, requires that certain parameters be monitored on a continuous basis.

The Discharger has established an electronic system for operator notification for continuous recording device alarms. For systems installed following permit adoption, the notification system shall be installed simultaneously.

6. Other Special Provisions

a. Wastewater shall be treated to achieve effluent limitations contained in section IV.A.1 of this Order that are consistent with DPH reclamation criteria, CWC, Title22, Division 4, Chapter 3, (Title 22), or equivalent.

b. In the event of any change in control or ownership of land or waste discharge facilities presently owned or controlled by the Discharger, the Discharger shall notify the succeeding owner or operator of the existence of this Order by letter, a copy of which shall be immediately forwarded to the Regional Water Board.

   To assume operation under this Order, the succeeding owner or operator must apply in writing to the Executive Officer requesting transfer of the Order. The request must contain the requesting entity's full legal name, the State of incorporation if a corporation, address and telephone number of the persons responsible for contact with the Regional Water Board and a statement. The statement shall comply with the signatory and certification requirements in the Federal Standard Provisions (Attachment D, Section V.B.) and state that the new owner or operator assumes full responsibility for compliance with this Order. Failure to submit the request shall be considered a discharge without requirements, a violation of the California Water Code. Transfer shall be approved or disapproved in writing by the Executive Officer.

7. Compliance Schedules – Not Applicable

VII. COMPLIANCE DETERMINATION

Compliance with the effluent limitations contained in section IV of this Order will be determined as specified below:

A. **BOD_5 and TSS Effluent Limitations**. Compliance with the final effluent limitations for BOD_5 and TSS shall be ascertained by 24-hour composite samples. Compliance with effluent limitations for percent removal shall be calculated using the arithmetic mean of BOD_5 and TSS in effluent samples collected over a monthly period as a percentage of the arithmetic mean of the values for influent samples collected at approximately the same times during the same period.

B. **Total Coliform Organisms Effluent Limitations**. For each day that an effluent sample is collected and analyzed for total coliform organisms, the 7-day median shall be determined by calculating the median concentration of total coliform bacteria in the effluent utilizing the bacteriological results of the last seven days for which analyses have been completed. If the 7-day median of total coliform organisms exceeds a most

probable number (MPN) of 2.2 per 100 milliliters, the Discharger will be considered out of compliance for that parameter for that 1 day only within the reporting period.

C. **Average Dry Weather Flow Effluent Limitations**. The average dry weather flow (ADWF) represents the average flow when groundwater is at or near normal and runoff is not occurring. Compliance with the ADWF effluent limitations will be determined annually based on the average of daily flows occurring over the 3 consecutive driest months (e.g., July, August, and September).

D. **Mass Effluent Limitations.** Compliance with the mass effluent limitations will be determined during average dry weather periods only and runoff is not occurring.

E. **Priority Pollutants.** Dischargers shall be deemed out of compliance with an effluent limitation if the concentration of the priority pollutant in the monitoring sample is greater than the effluent limitation and greater than or equal to the reporting level (RL).

ATTACHMENT A – DEFINITIONS

Arithmetic Mean (μ), also called the average, is the sum of measured values divided by the number of samples. For ambient water concentrations, the arithmetic mean is calculated as follows:

Arithmetic mean = $\mu = \Sigma x / n$ where: Σx is the sum of the measured ambient water concentrations, and n is the number of samples.

Average Monthly Effluent Limitation (AMEL): the highest allowable average of daily discharges over a calendar month, calculated as the sum of all daily discharges measured during a calendar month divided by the number of daily discharges measured during that month.

Average Weekly Effluent Limitation (AWEL): the highest allowable average of daily discharges over a calendar week (Sunday through Saturday), calculated as the sum of all daily discharges measured during a calendar week divided by the number of daily discharges measured during that week.

Bioaccumulative pollutants are those substances taken up by an organism from its surrounding medium through gill membranes, epithelial tissue, or from food and subsequently concentrated and retained in the body of the organism.

Carcinogenic pollutants are substances that are known to cause cancer in living organisms.

Coefficient of Variation (*CV*) is a measure of the data variability and is calculated as the estimated standard deviation divided by the arithmetic mean of the observed values.

Daily Discharge: Daily Discharge is defined as either: (1) the total mass of the constituent discharged over the calendar day (12:00 am through 11:59 pm) or any 24-hour period that reasonably represents a calendar day for purposes of sampling (as specified in the permit), for a constituent with limitations expressed in units of mass or; (2) the unweighted arithmetic mean measurement of the constituent over the day for a constituent with limitations expressed in other units of measurement (e.g., concentration).

The daily discharge may be determined by the analytical results of a composite sample taken over the course of one day (a calendar day or other 24-hour period defined as a day) or by the arithmetic mean of analytical results from one or more grab samples taken over the course of the day.

For composite sampling, if 1 day is defined as a 24-hour period other than a calendar day, the analytical result for the 24-hour period will be considered as the result for the calendar day in which the 24-hour period ends.

Detected, but Not Quantified (DNQ) are those sample results less than the RL, but greater than or equal to the laboratory's MDL.

Dilution Credit is the amount of dilution granted to a discharge in the calculation of a water quality-based effluent limitation, based on the allowance of a specified mixing zone. It is calculated from the dilution ratio or determined through conducting a mixing zone study or modeling of the discharge and receiving water.

Effluent Concentration Allowance (ECA) is a value derived from the water quality criterion/objective, dilution credit, and ambient background concentration that is used, in conjunction with the coefficient of variation for the effluent monitoring data, to calculate a long-term average (LTA) discharge concentration. The ECA has the same meaning as waste load allocation (WLA) as used in U.S. EPA guidance (Technical Support Document For Water Quality-based Toxics Control, March 1991, second printing, EPA/505/2-90-001).

Enclosed Bays means indentations along the coast that enclose an area of oceanic water within distinct headlands or harbor works. Enclosed bays include all bays where the narrowest distance between the headlands or outermost harbor works is less than 75 percent of the greatest dimension of the enclosed portion of the bay. Enclosed bays include, but are not limited to, Humboldt Bay, Bodega Harbor, Tomales Bay, Drake's Estero, San Francisco Bay, Morro Bay, Los Angeles-Long Beach Harbor, Upper and Lower Newport Bay, Mission Bay, and San Diego Bay. Enclosed bays do not include inland surface waters or ocean waters.

Estimated Chemical Concentration is the estimated chemical concentration that results from the confirmed detection of the substance by the analytical method below the ML value.

Estuaries means waters, including coastal lagoons, located at the mouths of streams that serve as areas of mixing for fresh and ocean waters. Coastal lagoons and mouths of streams that are temporarily separated from the ocean by sandbars shall be considered estuaries. Estuarine waters shall be considered to extend from a bay or the open ocean to a point upstream where there is no significant mixing of fresh water and seawater. Estuarine waters include~~d~~, but are not limited to, the Sacramento-San Joaquin Delta, as defined in Water Code section 12220, Suisun Bay, Carquinez Strait downstream to the Carquinez Bridge, and appropriate areas of the Smith, Mad, Eel, Noyo, Russian, Klamath, San Diego, and Otay rivers. Estuaries do not include inland surface waters or ocean waters.

Inland Surface Waters are all surface waters of the State that do not include the ocean, enclosed bays, or estuaries.

Instantaneous Maximum Effluent Limitation: the highest allowable value for any single grab sample or aliquot (i.e., each grab sample or aliquot is independently compared to the instantaneous maximum limitation).

Instantaneous Minimum Effluent Limitation: the lowest allowable value for any single grab sample or aliquot (i.e., each grab sample or aliquot is independently compared to the instantaneous minimum limitation).

Maximum Daily Effluent Limitation (MDEL) means the highest allowable daily discharge of a pollutant, over a calendar day (or 24-hour period). For pollutants with limitations expressed in

units of mass, the daily discharge is calculated as the total mass of the pollutant discharged over the day. For pollutants with limitations expressed in other units of measurement, the daily discharge is calculated as the arithmetic mean measurement of the pollutant over the day.

Median is the middle measurement in a set of data. The median of a set of data is found by first arranging the measurements in order of magnitude (either increasing or decreasing order). If the number of measurements (n) is odd, then the median = $X_{(n+1)/2}$. If n is even, then the median = $(X_{n/2} + X_{(n/2)+1})/2$ (i.e., the midpoint between the $n/2$ and $n/2+1$).

Method Detection Limit (MDL) is the minimum concentration of a substance that can be measured and reported with 99 percent confidence that the analyte concentration is greater than zero, as defined in title 40 of the Code of Federal Regulations, Part 136, Attachment B, revised as of July 3, 1999.

Minimum Level (ML) is the concentration at which the entire analytical system must give a recognizable signal and acceptable calibration point. The ML is the concentration in a sample that is equivalent to the concentration of the lowest calibration standard analyzed by a specific analytical procedure, assuming that all the method specified sample weights, volumes, and processing steps have been followed.

Mixing Zone is a limited volume of receiving water that is allocated for mixing with a wastewater discharge where water quality criteria can be exceeded without causing adverse effects to the overall water body.

Not Detected (ND) are those sample results less than the laboratory's MDL.

Ocean Waters are the territorial marine waters of the State as defined by California law to the extent these waters are outside of enclosed bays, estuaries, and coastal lagoons. Discharges to ocean waters are regulated in accordance with the State Water Board's California Ocean Plan.

Persistent pollutants are substances for which degradation or decomposition in the environment is nonexistent or very slow.

Pollutant Minimization Program (PMP) means waste minimization and pollution prevention actions that include, but are not limited to, product substitution, waste stream recycling, alternative waste management methods, and education of the public and businesses. The goal of the PMP shall be to reduce all potential sources of a priority pollutant(s) through pollutant minimization (control) strategies, including pollution prevention measures as appropriate, to maintain the effluent concentration at or below the water quality-based effluent limitation. Pollution prevention measures may be particularly appropriate for persistent bioaccumulative priority pollutants where there is evidence that beneficial uses are being impacted. The Regional Water Board may consider cost effectiveness when establishing the requirements of a PMP. The completion and implementation of a Pollution Prevention Plan, if required pursuant to Water Code section 13263.3(d), shall be considered to fulfill the PMP requirements.

Pollution Prevention means any action that causes a net reduction in the use or generation of a hazardous substance or other pollutant that is discharged into water and includes, but is not limited to, input change, operational improvement, production process change, and product reformulation (as defined in Water Code section 13263.3). Pollution prevention does not include actions that merely shift a pollutant in wastewater from one environmental medium to another environmental medium, unless clear environmental benefits of such an approach are identified to the satisfaction of the State or Regional Water Board.

Reporting Level (RL) is the ML (and its associated analytical method) chosen by the Discharger for reporting and compliance determination from the MLs included in this Order. The MLs included in this Order correspond to approved analytical methods for reporting a sample result that are selected by the Regional Water Board either from Appendix 4 of the SIP in accordance with section 2.4.2 of the SIP or established in accordance with section 2.4.3 of the SIP. The ML is based on the proper application of method-based analytical procedures for sample preparation and the absence of any matrix interferences. Other factors may be applied to the ML depending on the specific sample preparation steps employed. For example, the treatment typically applied in cases where there are matrix-effects is to dilute the sample or sample aliquot by a factor of ten. In such cases, this additional factor must be applied to the ML in the computation of the RL.

Satellite Collection System is the portion, if any, of a sanitary sewer system owned or operated by a different public agency than the agency that owns and operates the wastewater treatment facility that a sanitary sewer system is tributary to.

Source of Drinking Water is any water designated as municipal or domestic supply (MUN) in a Regional Water Board Basin Plan.

Standard Deviation (σ) is a measure of variability that is calculated as follows:

$$\sigma = (\sum[(x - \mu)^2]/(n - 1))^{0.5}$$

where:

x is the observed value;
μ is the arithmetic mean of the observed values; and
n is the number of samples.

Toxicity Reduction Evaluation (TRE) is a study conducted in a step-wise process designed to identify the causative agents of effluent or ambient toxicity, isolate the sources of toxicity, evaluate the effectiveness of toxicity control options, and then confirm the reduction in toxicity. The first steps of the TRE consist of the collection of data relevant to the toxicity, including additional toxicity testing, and an evaluation of facility operations and maintenance practices, and best management practices. A Toxicity Identification Evaluation (TIE) may be required as part of the TRE, if appropriate. (A TIE is a set of procedures to identify the specific chemical(s) responsible for toxicity. These procedures are performed in three phases (characterization, identification, and confirmation) using aquatic organism toxicity tests.)

ATTACHMENT B – SITE LOCATION MAP

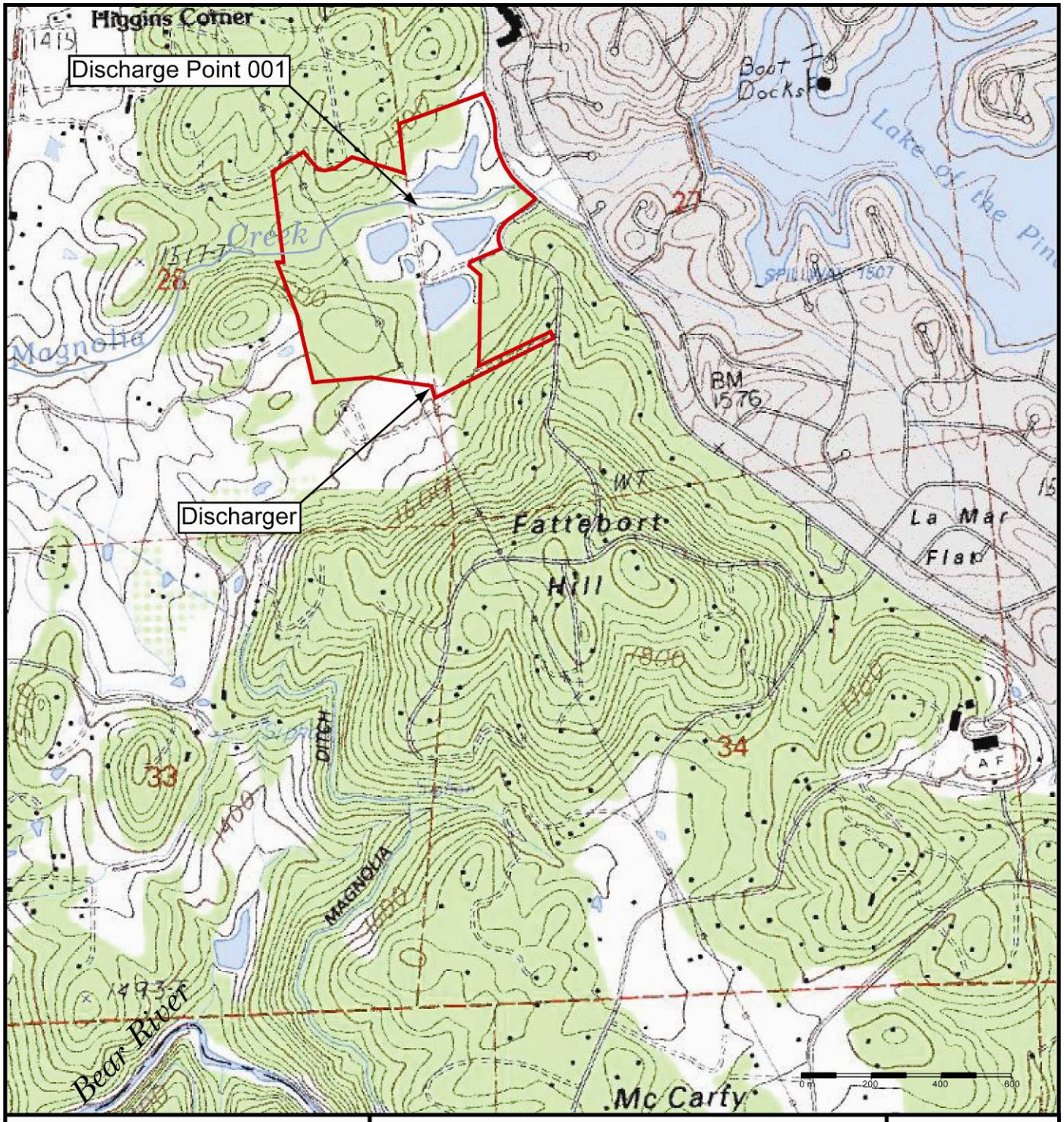

Drawing Reference: LAKE OF THE PINES U.S.G.S TOPOGRAPHIC MAP 7.5 MINUTE QUADRANGLE *Topographic Map* *Dated 7/1/1995*	SITE LOCATION MAP NEVADA COUNTY SANITATION DISTRICT NO. 1 LAKE OF THE PINES WASTEWATER TREATMENT PLANT NEVADA COUNTY	N W E S

ATTACHMENT C – FLOW SCHEMATIC

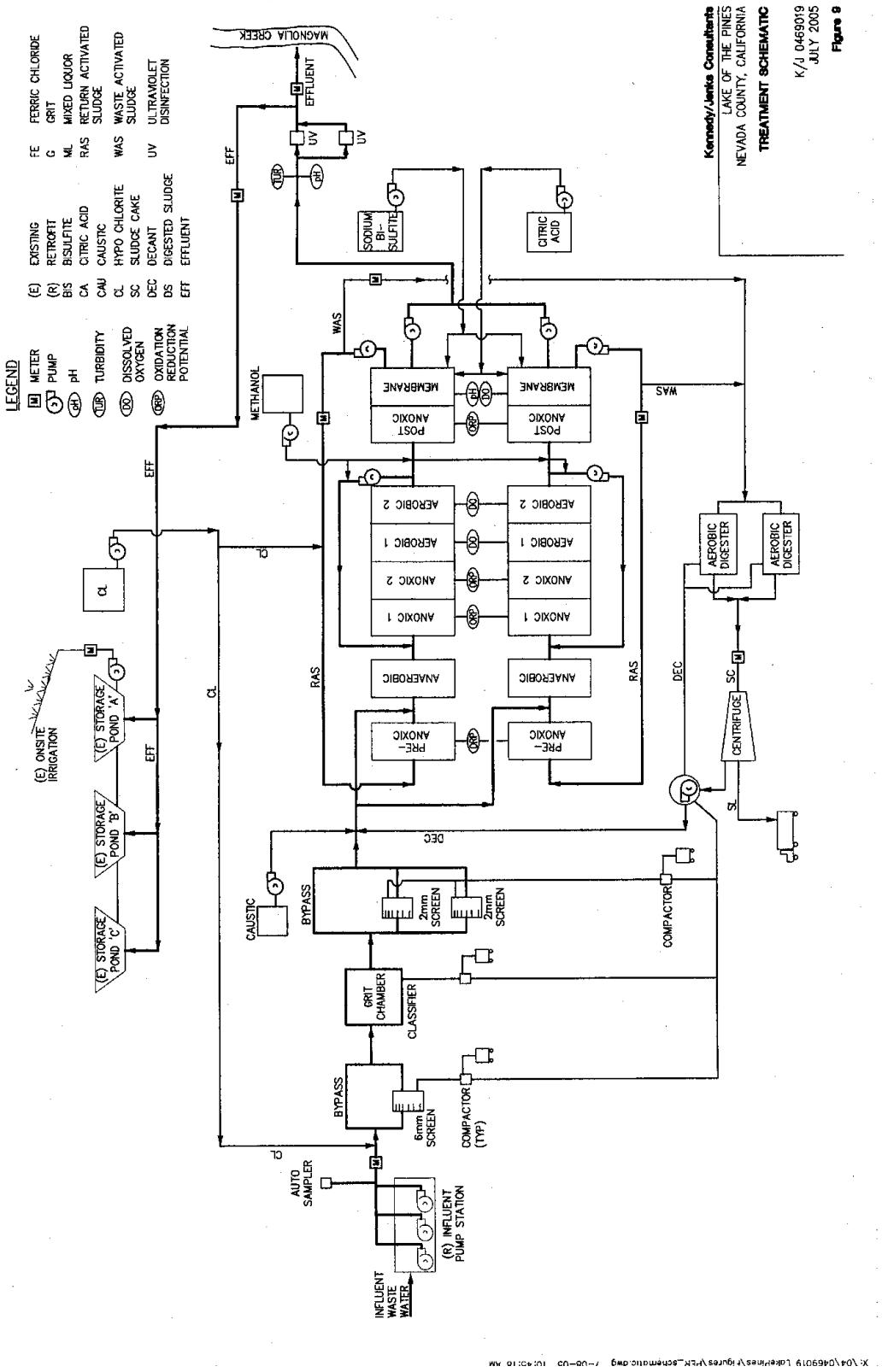

ATTACHMENT D –STANDARD PROVISIONS

I. STANDARD PROVISIONS – PERMIT COMPLIANCE

A. Duty to Comply

1. The Discharger must comply with all of the conditions of this Order. Any noncompliance constitutes a violation of the Clean Water Act (CWA) and the California Water Code and is grounds for enforcement action, for permit termination, revocation and reissuance, or modification; or denial of a permit renewal application. (40 C.F.R. § 122.41(a).)

2. The Discharger shall comply with effluent standards or prohibitions established under Section 307(a) of the CWA for toxic pollutants and with standards for sewage sludge use or disposal established under Section 405(d) of the CWA within the time provided in the regulations that establish these standards or prohibitions, even if this Order has not yet been modified to incorporate the requirement. (40 C.F.R. § 122.41(a)(1).)

B. Need to Halt or Reduce Activity Not a Defense

It shall not be a defense for a Discharger in an enforcement action that it would have been necessary to halt or reduce the permitted activity in order to maintain compliance with the conditions of this Order. (40 C.F.R. § 122.41(c).)

C. Duty to Mitigate

The Discharger shall take all reasonable steps to minimize or prevent any discharge or sludge use or disposal in violation of this Order that has a reasonable likelihood of adversely affecting human health or the environment. (40 C.F.R. § 122.41(d).)

D. Proper Operation and Maintenance

The Discharger shall at all times properly operate and maintain all facilities and systems of treatment and control (and related appurtenances) which are installed or used by the Discharger to achieve compliance with the conditions of this Order. Proper operation and maintenance also includes adequate laboratory controls and appropriate quality assurance procedures. This provision requires the operation of backup or auxiliary facilities or similar systems that are installed by a Discharger only when necessary to achieve compliance with the conditions of this Order. (40 C.F.R. § 122.41(e).)

E. Property Rights

1. This Order does not convey any property rights of any sort or any exclusive privileges. (40 C.F.R. § 122.41(g).)

2. The issuance of this Order does not authorize any injury to persons or property or invasion of other private rights, or any infringement of state or local law or regulations. (40 C.F.R. § 122.5(c).)

F. Inspection and Entry

The Discharger shall allow the Regional Water Board, State Water Board, United States Environmental Protection Agency (USEPA), and/or their authorized representatives (including an authorized contractor acting as their representative), upon the presentation of credentials and other documents, as may be required by law, to (40 C.F.R. § 122.41(i); CWC, § 13383):

1. Enter upon the Discharger's premises where a regulated facility or activity is located or conducted, or where records are kept under the conditions of this Order (40 C.F.R. § 122.41(i)(1));

2. Have access to and copy, at reasonable times, any records that must be kept under the conditions of this Order (40 C.F.R. § 122.41(i)(2));

3. Inspect and photograph, at reasonable times, any facilities, equipment (including monitoring and control equipment), practices, or operations regulated or required under this Order (40 C.F.R. § 122.41(i)(3)); and

4. Sample or monitor, at reasonable times, for the purposes of assuring Order compliance or as otherwise authorized by the CWA or the Water Code, any substances or parameters at any location. (40 C.F.R. § 122.41(i)(4).)

G. Bypass

1. Definitions

   a. “Bypass” means the intentional diversion of waste streams from any portion of a treatment facility. (40 C.F.R. § 122.41(m)(1)(i).)

   b. “Severe property damage” means substantial physical damage to property, damage to the treatment facilities, which causes them to become inoperable, or substantial and permanent loss of natural resources that can reasonably be expected to occur in the absence of a bypass. Severe property damage does not mean economic loss caused by delays in production. (40 C.F.R. § 122.41(m)(1)(ii).)

2. Bypass not exceeding limitations. The Discharger may allow any bypass to occur which does not cause exceedances of effluent limitations, but only if it is for essential maintenance to assure efficient operation. These bypasses are not subject to the provisions listed in Standard Provisions – Permit Compliance I.G.3, I.G.4, and I.G.5 below. (40 C.F.R. § 122.41(m)(2).)

3. Prohibition of bypass. Bypass is prohibited, and the Regional Water Board may take enforcement action against a Discharger for bypass, unless (40 C.F.R. § 122.41(m)(4)(i)):

    a. Bypass was unavoidable to prevent loss of life, personal injury, or severe property damage (40 C.F.R. § 122.41(m)(4)(i)(A));

    b. There were no feasible alternatives to the bypass, such as the use of auxiliary treatment facilities, retention of untreated wastes, or maintenance during normal periods of equipment downtime. This condition is not satisfied if adequate back-up equipment should have been installed in the exercise of reasonable engineering judgment to prevent a bypass that occurred during normal periods of equipment downtime or preventive maintenance (40 C.F.R. § 122.41(m)(4)(i)(B)); and

    c. The Discharger submitted notice to the Regional Water Board as required under Standard Provisions – Permit Compliance I.G.5 below. (40 C.F.R. § 122.41(m)(4)(i)(C).)

4. The Regional Water Board may approve an anticipated bypass, after considering its adverse effects, if the Regional Water Board determines that it will meet the three conditions listed in Standard Provisions – Permit Compliance I.G.3 above. (40 C.F.R. § 122.41(m)(4)(ii).)

5. Notice

    a. Anticipated bypass. If the Discharger knows in advance of the need for a bypass, it shall submit a notice, if possible at least 10 days before the date of the bypass. (40 C.F.R. § 122.41(m)(3)(i).)

    b. Unanticipated bypass. The Discharger shall submit notice of an unanticipated bypass as required in Standard Provisions - Reporting V.E below (24-hour notice). (40 C.F.R. § 122.41(m)(3)(ii).)

H. Upset

Upset means an exceptional incident in which there is unintentional and temporary noncompliance with technology based permit effluent limitations because of factors beyond the reasonable control of the Discharger. An upset does not include noncompliance to the extent caused by operational error, improperly designed treatment facilities, inadequate treatment facilities, lack of preventive maintenance, or careless or improper operation. (40 C.F.R. § 122.41(n)(1).)

1. Effect of an upset. An upset constitutes an affirmative defense to an action brought for noncompliance with such technology based permit effluent limitations if the requirements of Standard Provisions – Permit Compliance I.H.2 below are met. No determination made during administrative review of claims that noncompliance was

caused by upset, and before an action for noncompliance, is final administrative action subject to judicial review. (40 C.F.R. § 122.41(n)(2).).

2. Conditions necessary for a demonstration of upset. A Discharger who wishes to establish the affirmative defense of upset shall demonstrate, through properly signed, contemporaneous operating logs or other relevant evidence that (40 C.F.R. § 122.41(n)(3)):

   a. An upset occurred and that the Discharger can identify the cause(s) of the upset (40 C.F.R. § 122.41(n)(3)(i));

   b. The permitted facility was, at the time, being properly operated (40 C.F.R. § 122.41(n)(3)(ii));

   c. The Discharger submitted notice of the upset as required in Standard Provisions – Reporting V.E.2.b below (24-hour notice) (40 C.F.R. § 122.41(n)(3)(iii)); and

   d. The Discharger complied with any remedial measures required under Standard Provisions – Permit Compliance I.C above. (40 C.F.R. § 122.41(n)(3)(iv).)

3. Burden of proof. In any enforcement proceeding, the Discharger seeking to establish the occurrence of an upset has the burden of proof. (40 C.F.R. § 122.41(n)(4).)

II. STANDARD PROVISIONS – PERMIT ACTION

A. General

This Order may be modified, revoked and reissued, or terminated for cause. The filing of a request by the Discharger for modification, revocation and reissuance, or termination, or a notification of planned changes or anticipated noncompliance does not stay any Order condition. (40 C.F.R. § 122.41(f).)

B. Duty to Reapply

If the Discharger wishes to continue an activity regulated by this Order after the expiration date of this Order, the Discharger must apply for and obtain a new permit. (40 C.F.R. § 122.41(b).)

C. Transfers

This Order is not transferable to any person except after notice to the Regional Water Board. The Regional Water Board may require modification or revocation and reissuance of the Order to change the name of the Discharger and incorporate such other requirements as may be necessary under the CWA and the Water Code. (40 C.F.R. § 122.41(l)(3); § 122.61.)

III. STANDARD PROVISIONS – MONITORING

A. Samples and measurements taken for the purpose of monitoring shall be representative of the monitored activity. (40 C.F.R. § 122.41(j)(1).)

B. Monitoring results must be conducted according to test procedures under 40 CFR Part 136 or, in the case of sludge use or disposal, approved under 49 CFR Part 136 unless otherwise specified in 40 CFR Part 503 unless other test procedures have been specified in this Order. (40 C.F.R. § 122.41(j)(4); § 122.44(i)(1)(iv).)

IV. STANDARD PROVISIONS – RECORDS

A. Except for records of monitoring information required by this Order related to the Discharger's sewage sludge use and disposal activities, which shall be retained for a period of at least 5 years (or longer as required by 40 CFR Part 503), the Discharger shall retain records of all monitoring information, including all calibration and maintenance records and all original strip chart recordings for continuous monitoring instrumentation, copies of all reports required by this Order, and records of all data used to complete the application for this Order, for a period of at least three (3) years from the date of the sample, measurement, report or application. This period may be extended by request of the Regional Water Board Executive Officer at any time. (40 C.F.R. § 122.41(j)(2).)

B. Records of monitoring information shall include:

1. The date, exact place, and time of sampling or measurements (40 C.F.R. § 122.41(j)(3)(i));

2. The individual(s) who performed the sampling or measurements (40 C.F.R. § 122.41(j)(3)(ii));

3. The date(s) analyses were performed (40 C.F.R. § 122.41(j)(3)(iii));

4. The individual(s) who performed the analyses (40 C.F.R. § 122.41(j)(3)(iv));

5. The analytical techniques or methods used (40 C.F.R. § 122.41(j)(3)(v)); and

6. The results of such analyses. (40 C.F.R. § 122.41(j)(3)(vi).)

C. Claims of confidentiality for the following information will be denied (40 C.F.R. § 122.7(b)):

1. The name and address of any permit applicant or Discharger (40 C.F.R. § 122.7(b)(1)); and

2. Permit applications and attachments, permits and effluent data. (40 C.F.R. § 122.7(b)(2).)

V. STANDARD PROVISIONS – REPORTING

A. Duty to Provide Information

The Discharger shall furnish to the Regional Water Board, State Water Board, or USEPA within a reasonable time, any information which the Regional Water Board, State Water Board, or USEPA may request to determine whether cause exists for modifying, revoking and reissuing, or terminating this Order or to determine compliance with this Order. Upon request, the Discharger shall also furnish to the Regional Water Board, State Water Board, or USEPA copies of records required to be kept by this Order. (40 C.F.R. § 122.41(h); CWC, § 13267.)

B. Signatory and Certification Requirements

1. All applications, reports, or information submitted to the Regional Water Board, State Water Board, and/or USEPA shall be signed and certified in accordance with Standard Provisions – Reporting V.B.2, V.B.3, V.B.4, and V.B.5 below. (40 C.F.R. § 122.41(k).)

2. All permit applications shall be signed by either a principal executive officer or ranking elected official. For purposes of this provision, a principal executive officer of a federal agency includes: (i) the chief executive officer of the agency, or (ii) a senior executive officer having responsibility for the overall operations of a principal geographic unit of the agency (e.g., Regional Administrators of USEPA). (40 C.F.R. § 122.22(a)(3).).

3. All reports required by this Order and other information requested by the Regional Water Board, State Water Board, or USEPA shall be signed by a person described in Standard Provisions – Reporting V.B.2 above, or by a duly authorized representative of that person. A person is a duly authorized representative only if:

    a. The authorization is made in writing by a person described in Standard Provisions – Reporting V.B.2 above (40 C.F.R. § 122.22(b)(1));

    b. The authorization specifies either an individual or a position having responsibility for the overall operation of the regulated facility or activity such as the position of plant manager, operator of a well or a well field, superintendent, position of equivalent responsibility, or an individual or position having overall responsibility for environmental matters for the company. (A duly authorized representative may thus be either a named individual or any individual occupying a named position.) (40 C.F.R. § 122.22(b)(2)); and

    c. The written authorization is submitted to the Regional Water Board and State Water Board. (40 C.F.R. § 122.22(b)(3).)

4. If an authorization under Standard Provisions – Reporting V.B.3 above is no longer accurate because a different individual or position has responsibility for the overall operation of the facility, a new authorization satisfying the requirements of Standard Provisions – Reporting V.B.3 above must be submitted to the Regional Water Board and State Water Board prior to or together with any reports, information, or applications, to be signed by an authorized representative. (40 C.F.R. § 122.22(c).)

5. Any person signing a document under Standard Provisions – Reporting V.B.2 or V.B.3 above shall make the following certification:

   "I certify under penalty of law that this document and all attachments were prepared under my direction or supervision in accordance with a system designed to assure that qualified personnel properly gather and evaluate the information submitted. Based on my inquiry of the person or persons who manage the system or those persons directly responsible for gathering the information, the information submitted is, to the best of my knowledge and belief, true, accurate, and complete. I am aware that there are significant penalties for submitting false information, including the possibility of fine and imprisonment for knowing violations." (40 C.F.R. § 122.22(d).)

C. Monitoring Reports

1. Monitoring results shall be reported at the intervals specified in the Monitoring and Reporting Program (Attachment E) in this Order. (40 C.F.R. § 122.22(l)(4).)

2. Monitoring results must be reported on a Discharge Monitoring Report (DMR) form or forms provided or specified by the Regional Water Board or State Water Board for reporting results of monitoring of sludge use or disposal practices. (40 C.F.R. § 122.41(l)(4)(i).)

3. If the Discharger monitors any pollutant more frequently than required by this Order using test procedures approved under Part 136 or, in the case of sludge use or disposal, approved under Part 136 unless otherwise specified in Part 503, or as specified in this Order, the results of this monitoring shall be included in the calculation and reporting of the data submitted in the DMR or sludge reporting form specified by the Regional Water Board. (40 C.F.R. § 122.41(l)(4)(ii).)

4. Calculations for all limitations, which require averaging of measurements, shall utilize an arithmetic mean unless otherwise specified in this Order. (40 C.F.R. § 122.41(l)(4)(iii).)

D. Compliance Schedules

Reports of compliance or noncompliance with, or any progress reports on, interim and final requirements contained in any compliance schedule of this Order, shall be submitted no later than 14 days following each schedule date. (40 C.F.R. § 122.41(l)(5).)

E. Twenty-Four Hour Reporting

1. The Discharger shall report any noncompliance that may endanger health or the environment. Any information shall be provided orally within 24 hours from the time the Discharger becomes aware of the circumstances. A written submission shall also be provided within five (5) days of the time the Discharger becomes aware of the circumstances. The written submission shall contain a description of the noncompliance and its cause; the period of noncompliance, including exact dates and times, and if the noncompliance has not been corrected, the anticipated time it is expected to continue; and steps taken or planned to reduce, eliminate, and prevent reoccurrence of the noncompliance. (40 C.F.R. § 122.41(l)(6)(i).)

2. The following shall be included as information that must be reported within 24 hours under this paragraph (40 C.F.R. § 122.41(l)(6)(ii)):

   a. Any unanticipated bypass that exceeds any effluent limitation in this Order. (40 C.F.R. § 122.41(l)(6)(ii)(A).)

   b. Any upset that exceeds any effluent limitation in this Order. (40 C.F.R. § 122.41(l)(6)(ii)(B).)

3. The Regional Water Board may waive the above-required written report under this provision on a case-by-case basis if an oral report has been received within 24 hours. (40 C.F.R. § 122.41(l)(6)(iii).)

F. Planned Changes

The Discharger shall give notice to the Regional Water Board as soon as possible of any planned physical alterations or additions to the permitted facility. Notice is required under this provision only when (40 C.F.R. § 122.41(l)(1)):

1. The alteration or addition to a permitted facility may meet one of the criteria for determining whether a facility is a new source in section 40 C.F.R.122.29(b) (40 C.F.R. § 122.41(l)(1)(i)); or

2. The alteration or addition could significantly change the nature or increase the quantity of pollutants discharged. This notification applies to pollutants that are not subject to effluent limitations in this Order. (40 C.F.R. § 122.41(l)(1)(ii).)

3. The alteration or addition results in a significant change in the Discharger's sludge use or disposal practices, and such alteration, addition, or change may justify the application of permit conditions that are different from or absent in the existing permit, including notification of additional use or disposal sites not reported during the permit application process or not reported pursuant to an approved land application plan. (40 C.F.R.§ 122.41(l)(1)(iii).)

G. Anticipated Noncompliance

The Discharger shall give advance notice to the Regional Water Board or State Water Board of any planned changes in the permitted facility or activity that may result in noncompliance with General Order requirements. (40 C.F.R. § 122.41(l)(2).)

H. Other Noncompliance

The Discharger shall report all instances of noncompliance not reported under Standard Provisions – Reporting V.C, V.D, and V.E above at the time monitoring reports are submitted. The reports shall contain the information listed in Standard Provision – Reporting V.E above. (40 C.F.R. § 122.41(l)(7).)

I. Other Information

When the Discharger becomes aware that it failed to submit any relevant facts in a permit application, or submitted incorrect information in a permit application or in any report to the Regional Water Board, State Water Board, or USEPA, the Discharger shall promptly submit such facts or information. (40 C.F.R. § 122.41(l)(8).)

VI. STANDARD PROVISIONS – ENFORCEMENT

A. The Regional Water Board is authorized to enforce the terms of this permit under several provisions of the CWC, including, but not limited to, sections 13385, 13386, and 13387.

VII. ADDITIONAL PROVISIONS – NOTIFICATION LEVELS

A. Publicly-Owned Treatment Works (POTWs)

All POTWs shall provide adequate notice to the Regional Water Board of the following (40 C.F.R. § 122.42(b)):

1. Any new introduction of pollutants into the POTW from an indirect discharger that would be subject to sections 301 or 306 of the CWA if it were directly discharging those pollutants (40 C.F.R. § 122.42(b)(1)); and

2. Any substantial change in the volume or character of pollutants being introduced into that POTW by a source introducing pollutants into the POTW at the time of adoption of the Order. (40 C.F.R. § 122.42(b)(2).)

3. Adequate notice shall include information on the quality and quantity of effluent introduced into the POTW as well as any anticipated impact of the change on the quantity or quality of effluent to be discharged from the POTW. (40 C.F.R. § 122.42(b)(3).)

ATTACHMENT E – MONITORING AND REPORTING PROGRAM

Table of Contents

Attachment E – Monitoring and Reporting Program (MRP) E-2
I. General Monitoring Provisions E-2
II. Monitoring Locations E-3
III. Influent Monitoring Requirements E-4
A. Monitoring Location INF-001 ..... E-4
IV. Effluent Monitoring Requirements E-4
A. Monitoring Location EFF-001 ..... E-4
V. Whole Effluent Toxicity Testing Requirements E-5
VI. Discharge to Emergency Storage Pond Requirements E-8
A. Monitoring Location ESP-001 ..... E-8
VII. Land Discharge Monitoring Requirements – Not Applicable E-9
VIII. Reclamation Monitoring Requirements E-9
A. Monitoring Location PND-001, PND-002, and PND-003 ..... E-9
B. Monitoring Location LND-001 ..... E-9
IX. Receiving Water Monitoring Requirements – Surface Water E-9
A. Monitoring Location RSW-001 and RSW-002 ..... E-9
B. Ground Water Monitoring – Not Applicable E-10
X. Other Monitoring Requirements E-10
A. Biosolids E-10
B. Municipal Water Supply E-11
C. Ultraviolet Disinfection System E-11
XI. Reporting Requirements E-12
A. General Monitoring and Reporting Requirements E-12
B. Self Monitoring Reports (SMRs) E-13
C. Discharge Monitoring Reports (DMRs) E-15
D. Other Reports E-16

List of Tables

Table E-1. Monitoring Station Locations E-3
Table E-2. Influent Monitoring E-4
Table E-3. Effluent Monitoring E-4
Table E-4. Chronic Toxicity Testing Dilution Series E-7
Table E-5. Emergency Storage Pond Requirements E-8
Table E-6. Reclamation Pond Monitoring Requirements E-9
Table E-7. Landscape Irrigation Monitoring Requirements E-9
Table E-8. Receiving Water Monitoring Requirements E-9
Table E-10. Municipal Water Supply Monitoring Requirements E-11
Table E-11. Ultraviolet Disinfection System Monitoring Requirements E-11
Table E-12. Monitoring Periods and Reporting Schedule E-15

ATTACHMENT E – MONITORING AND REPORTING PROGRAM (MRP)

Title 40 of the Code of Federal Regulations (CFR) section 122.48 requires that all NPDES permits specify monitoring and reporting requirements. California Water Code (CWC) Sections 13267 and 13383 also authorize the Regional Water Quality Control Board (Regional Water Board) to require technical and monitoring reports. This MRP establishes monitoring and reporting requirements, which implement the federal and California regulations.

I. GENERAL MONITORING PROVISIONS

A. Samples and measurements taken as required herein shall be representative of the volume and nature of the monitored discharge. All samples shall be taken at the monitoring locations specified below and, unless otherwise specified, before the monitored flow joins or is diluted by any other waste stream, body of water, or substance. Monitoring locations shall not be changed without notification to and the approval of this Regional Water Board.

B. Effluent samples shall be taken downstream of the last addition of wastes to the treatment or discharge works where a representative sample may be obtained prior to mixing with the receiving waters. Samples shall be collected at such a point and in such a manner to ensure a representative sample of the Discharge.

C. Chemical, bacteriological, and bioassay analyses shall be conducted at a laboratory certified for such analyses by the Department of Public Health (DPH, formerly the Department of Health Services). In the event a certified laboratory is not available to the Discharger, analyses performed by a noncertified laboratory will be accepted provided a Quality Assurance-Quality Control Program is instituted by the laboratory. A manual containing the steps followed in this program must be kept in the laboratory and shall be available for inspection by Regional Water Board staff. The Quality Assurance-Quality Control Program must conform to USEPA guidelines or to procedures approved by the Regional Water Board.

D. All analyses shall be performed in a laboratory certified to perform such analyses by DPH. Laboratories that perform sample analyses shall be identified in all monitoring reports submitted to the Regional Water Board.

E. Appropriate flow measurement devices and methods consistent with accepted scientific practices shall be selected and used to ensure the accuracy and reliability of measurements of the volume of monitored discharges. All monitoring instruments and devices used by the Discharger to fulfill the prescribed monitoring program shall be properly maintained and calibrated as necessary, at least yearly, to ensure their continued accuracy. All flow measurement devices shall be calibrated at least once per year to ensure continued accuracy of the devices.

F. Monitoring results, including noncompliance, shall be reported at intervals and in a manner specified in this Monitoring and Reporting Program.

G. Laboratories analyzing monitoring samples shall be certified by DPH, in accordance with the provision of CWC section 13176, and must include quality assurance/quality control data with their reports.

H. The Discharger shall conduct analysis on any sample provided by USEPA as part of the Discharge Monitoring Quality Assurance (DMQA) program. The results of any such analysis shall be submitted to USEPA's DMQA manager.

I. The shall file with the Regional Water Board technical reports on self-monitoring performed according to the detailed specifications contained in this Monitoring and Reporting Program.

J. The results of all monitoring required by this Order shall be reported to the Regional Water Board, and shall be submitted in such a format as to allow direct comparison with the limitations and requirements of this Order. Unless otherwise specified, discharge flows shall be reported in terms of the monthly average and the daily maximum discharge flows.

II. MONITORING LOCATIONS

The Discharger shall establish the following monitoring locations to demonstrate compliance with the effluent limitations, discharge specifications, and other requirements in this Order:

Table E-1. Monitoring Station Locations

Discharge Point Name	Monitoring Location Name	Monitoring Location Description (include Latitude and Longitude when available)
--	INF-001	Influent enters the headwork,
001	EFF-001	Treated effluent discharge into Magnolia Creek 39º 02’ 00” N, 121º 05’ 01” W
--	RSW-001	Magnolia Creek, 50 feet upstream from the point of discharge
--	RSW-002	Magnolia Creek, 300 feet downstream from the point of discharge
--	ESP-001	Emergency Storage Pond
--	PND-001	On site Pond A
--	PND-002	On site Pond B
--	PND-003	On site Pond C
--	LND-001	Landscape Irrigation Fields
--	BIO-001	Biosolids
--	SPL-001	Water Supply Source Water
--	UVS-001	UV Disinfection System

III. INFLUENT MONITORING REQUIREMENTS

A. Monitoring Location INF-001

1. The Discharger shall monitor influent to the facility at INF-001 as follows:

Table E-2. Influent Monitoring

Parameter	Units	Sample Type	Minimum Sampling Frequency	Required Analytical Test Method
Flow	MGD	Meter	Continuous	[1]
Biochemical Oxygen Demand (5-day @ 20°C)	mg/L, lbs/day	24-hr Composite	1/week	[1]
Total Suspended Solids	mg/L, lbs/day	24-hr Composite	1/week	[1]

[1] Pollutants shall be analyzed using the analytical methods described in 40 CFR Part 136.

IV. EFFLUENT MONITORING REQUIREMENTS

A. Monitoring Location EFF-001

1. The Discharger shall monitor treatment plant effluent at EFF-001 as follows. If more than one analytical test method is listed for a given parameter, the Discharger must select from the listed methods and corresponding Minimum Level:

Table E-3. Effluent Monitoring

Parameter	Units	Sample Type	Minimum Sampling Frequency	Required Analytical Test Method
Flow	MGD	Meter	Continuous	[1]
Total Residual Chlorine[2]	mg/L	Meter	Continuous	[1]
Temperature[3]	°F	Grab	1/day	[1]
pH	standard units	Grab	1/day	[1]
Biochemical Oxygen Demand (5-day @ 20°C)	mg/L	24-hr Composite[4]	2/week	[1]
Total Suspended Solids	mg/L	24-hr Composite[4]	2/week	[1]
Total Coliform Organisms	MPN/100 mL	Grab	3/week	[1]
Ammonia Nitrogen, Total (as N)[5]	mg/L	Grab	1/week	[1]
Nitrate + Nitrite Nitrogen (as N)	mg/L	Grab	1/week	[1]
Nitrite Nitrogen, Total (as N)	mg/L	Grab	1/week	[1]
Electrical Conductivity @ 25°C	µmhos/cm	Grab	1/month	[1]
Total Dissolved Solids	mg/L	Grab	1/quarter	[1]
Hardness (as $CaCO_3$)[6]	mg/L	Grab	1/quarter	[1]
Aluminum, Total Recoverable	µg/L	Grab	1/quarter[7]	[1]

Parameter	Units	Sample Type	Minimum Sampling Frequency	Required Analytical Test Method
Copper, Total Recoverable	µg/L	Grab	1/quarter[7]	[1]
Cyanide, Total Recoverable	µg/L	Grab	1/quarter[7]	[1]
Iron, Total Recoverable	µg/L	Grab	1/quarter[7]	[1]
Manganese, Total Recoverable	µg/L	Grab	1/quarter[7]	[1]
Alpha-BHC	µg/L	Grab	1/year	[1]
Aldrin	µg/L	Grab	1/year	[1]
Dieldrin	µg/L	Grab	1/year	[1]
Other Priority Pollutants[8]	µg/L	[10]	[11]	[1]

[1] Pollutants shall be analyzed using the analytical methods described in 40 CFR Part 136; for priority pollutants the methods must meet the lowest minimum levels (MLs) specified in Attachment 4 of the SIP, where no methods are specified for a given pollutant, by methods approved by this Regional Water Board or the State Water Board.

[2] Total chlorine residual must be monitored when chlorine is used during maintenance operations (membrane cleaning). The Discharger shall use a method sensitive to and accurate at the permitted level of 0.01 mg/L.

[3] A hand-held field meter may be used, provided the meter utilizes a USEPA-approved algorithm/method and is calibrated and maintained in accordance with the manufacturer's instructions. A calibration and maintenance log for each meter used for monitoring required by this Monitoring and Reporting Program shall be maintained at the Facility.

[4] 24-hour flow proportioned composite.

[5] Monitoring for ammonia shall be concurrent with acute whole effluent toxicity monitoring. See Section V.A.1. Temperature and pH shall be recorded at the time of ammonia sample collection.

[6] Hardness samples shall be collected concurrently with metals samples.

[7] Aluminum, copper, cyanide, iron, and manganese shall be sampled quarterly through the third year following the date of permit adoption. No sampling is required after the third year if the sample results find no reasonable potential exists.

[8] Concurrent with receiving surface water sampling.

[9] Volatile samples and bis(2-ethylhexyl)phthalate shall be grab samples, the remainder shall be 24-hour composite samples.

[10] Priority pollutants shall be sampled quarterly only during the third year following the date of permit adoption and shall be conducted concurrently with up stream receiving water monitoring for hardness (as $CaCO_3$) and pH. The Discharger is not required to conduct effluent monitoring for priority pollutants that have already been sampled in a given quarter, as required in Table E-3.

V. WHOLE EFFLUENT TOXICITY TESTING REQUIREMENTS

A. **Acute Toxicity Testing.** The Discharger shall conduct acute toxicity testing to determine whether the effluent is contributing acute toxicity to the receiving water. The Discharger shall meet the following acute toxicity testing requirements:

1. *Monitoring Frequency* – the Discharger shall perform semi-annual acute toxicity testing, concurrent with effluent ammonia sampling.

2. *Sample Types* – For static non-renewal and static renewal testing, the samples shall be grab samples and shall be representative of the volume and quality of the discharge. The effluent samples shall be taken at the effluent monitoring location EFF-001.

3. *Test Species* – Test species shall be fathead minnows (*Pimephales promelas*).

4. *Methods* – The acute toxicity testing samples shall be analyzed using EPA-821-R-02-012, Fifth Edition and its subsequent amendments or revisions. Temperature, total residual chlorine, and pH shall be recorded at the time of sample collection. No pH adjustment may be made unless approved by the Executive Officer.

5. *Test Failure* – If an acute toxicity test does not meet all test acceptability criteria, as specified in the test method, the Discharger must re-sample and re-test as soon as possible, not to exceed 7 days following notification of test failure.

B. **Chronic Toxicity Testing**. The Discharger shall conduct three species chronic toxicity testing to determine whether the effluent is contributing chronic toxicity to the receiving water. The Discharger shall meet the following chronic toxicity testing requirements:

1. *Monitoring Frequency* – The Discharger shall perform semi-annual three species chronic toxicity testing.

2. *Sample Types* – Effluent samples shall be flow proportional 24-hour composites and shall be representative of the volume and quality of the discharge. The effluent samples shall be taken at Monitoring Location EFF-001. The receiving water control shall be a grab sample obtained from the RSW-001 sampling location, as identified in the Monitoring and Reporting Program.

3. *Sample Volumes* – Adequate sample volumes shall be collected to provide renewal water to complete the test in the event that the discharge is intermittent.

4. *Test Species* – Chronic toxicity testing measures sublethal (e.g. reduced growth, reproduction) and/or lethal effects to test organisms exposed to an effluent compared to that of the control organisms. The Discharger shall conduct chronic toxicity tests with:

   - The cladoceran, water flea, *Ceriodaphnia dubia* (survival and reproduction test);
   - The fathead minnow, *Pimephales promelas* (larval survival and growth test); and
   - The green alga, *Selenastrum capricornutum* (growth test).

5. *Methods* – The presence of chronic toxicity shall be estimated as specified in *Short-term Methods for Estimating the Chronic Toxicity of Effluents and Receiving Waters to Freshwater Organisms, Fourth Edition,* EPA/821-R-02-013, October 2002 and its subsequent amendments or revisions.

6. *Reference Toxicant* – As required by the SIP, all chronic toxicity tests shall be conducted with concurrent testing with a reference toxicant and shall be reported with the chronic toxicity test results.

7. *Dilutions* – The chronic toxicity testing shall be performed using the dilution series identified in Table E-4, below. The receiving water control shall be used as the

diluent (unless the receiving water is toxic or is dry upstream of the discharge). In such cases, laboratory control water may be used as the diluent.

8. *Test Failure* –The Discharger must re-sample and re-test as soon as possible, but no later than fourteen (14) days after receiving notification of a test failure. A test failure is defined as follows:

   a. The reference toxicant test or the effluent test does not meet all test acceptability criteria as specified in the *Short-term Methods for Estimating the Chronic Toxicity of Effluents and Receiving Waters to Freshwater Organisms, Fourth Edition*, EPA/821-R-02-013, October 2002 (Method Manual), and its subsequent amendments or revisions; or

   b. The percent minimum significant difference (PMSD) measured for the test exceeds the upper PMSD bound variability criterion in Table 6 on page 52 of the Method Manual. (A retest is only required in this case if the test results do not exceed the monitoring trigger specified in Special Provisions VI. 2.a.iii.)

Table E-4. Chronic Toxicity Testing Dilution Series

Sample	Dilutions (%)					Controls	
	100	75	50	25	12.5	Receiving Water	Laboratory Water
% Effluent	100	75	50	25	12.5	0	0
% Receiving Water[1]	0	25	50	75	87.5	100	0
% Laboratory Water	0	0	0	0	0	0	100

1 If receiving water is toxic or if Magnolia Creek is dry upstream of the discharge, laboratory water will be used for the dilution series as described in EPA method 821-R-02-013 Section 7.12.

C. **WET Testing Notification Requirements**. The Discharger shall notify the Regional Water Board within 24-hrs after the receipt of test results exceeding the monitoring trigger during regular or accelerated monitoring, or an exceedance of the acute toxicity effluent limitation.

D. **WET Testing Reporting Requirements**. All toxicity test reports shall include the contracting laboratory's complete report provided to the Discharger and shall be in accordance with the appropriate "Report Preparation and Test Review" sections of the method manuals. At a minimum, whole effluent toxicity monitoring shall be reported as follows:

   1. **Chronic WET Reporting.** Regular chronic toxicity monitoring results shall be reported to the Regional Water Board on the schedule for semi-annual sampling described in Table E-12, and shall contain, at minimum:

      a. The results expressed in TUc, measured as 100/NOEC, and also measured as $100/LC_{50}$, $100/EC_{25}$, $100/IC_{25}$, and $100/IC_{50}$, as appropriate.

      b. The statistical methods used to calculate endpoints;

c. The statistical output page, which includes the calculation of the percent minimum significant difference (PMSD);

d. The dates of sample collection and initiation of each toxicity test; and

e. The results compared to the numeric toxicity monitoring trigger.

Additionally, the monthly discharger self-monitoring reports shall contain an updated chronology of chronic toxicity test results expressed in TUc, and organized by test species, type of test (survival, growth or reproduction), and monitoring frequency, i.e., either quarterly, monthly, accelerated, or TRE.

2. **Acute WET Reporting.** Acute toxicity test results shall be submitted with the monthly discharger self-monitoring reports and reported as percent survival.

3. **TRE Reporting.** Reports for Toxicity Reduction Evaluations shall be submitted in accordance with the schedule contained in the Discharger's approved TRE Work Plan.

4. **Quality Assurance (QA).** The Discharger must provide the following information for QA purposes (If applicable):

   a. Results of the applicable reference toxicant data with the statistical output page giving the species, NOEC, LOEC, type of toxicant, dilution water used, concentrations used, PMSD, and dates tested.

   b. The reference toxicant control charts for each endpoint, which include summaries of reference toxicant tests performed by the contracting laboratory.

   c. Any information on deviations or problems encountered and how they were dealt with.

VI. DISCHARGE TO EMERGENCY STORAGE POND REQUIREMENTS

A. Monitoring Location ESP-001

1. The Discharger shall monitor plant effluent discharged to the Emergency Storage Pond as follows:

Table E-5. Emergency Storage Pond Requirements

Parameter	Units	Sample Type	Minimum Sampling Frequency	Required Analytical Test Method
Flow	MGD	Meter	1/day[1]	--
Freeboard	Feet	Visual	1/day	--
Odors	--	Observation	1/day	--

1 Report total flow for each day when wastewater is discharged to the emergence storage pond.

VII. LAND DISCHARGE MONITORING REQUIREMENTS – Not Applicable

VIII. RECLAMATION MONITORING REQUIREMENTS

A. Monitoring Location PND-001, PND-002, and PND-003

1. The Discharger shall monitor the discharge to the onsite ponds as follows:

Table E-6. Reclamation Pond Monitoring Requirements

Parameter	Units	Sample Type	Minimum Sampling Frequency	Required Analytical Test Method
Flow	MGD	Meter	1/day[1]	[2]
Freeboard	feet	Measured	1/month	[2]
Biochemical Oxygen Demand (5-day @ 20°C)	mg/L	Composite	2/week	[2]
Total Suspended Solids	mg/L	Composite	2/week	[2]
Total Coliform Organisms	MPN/100 mL	Grab	3/week	[2]
pH	standard units	Grab	Continuous	[2]

1 Report total flow for each day when wastewater is discharged to the reclamation ponds.

2 Pollutants shall be analyzed using the analytical methods described in 40 CFR Part 136.

B. Monitoring Location LND-001

1. The Discharger shall monitor the discharge to on site landscape irrigation as follows:

Table E-7. Landscape Irrigation Monitoring Requirements

Parameter	Units	Sample Type	Minimum Sampling Frequency	Required Analytical Test Method
Flow	MGD	Meter	1/day[1]	--
Landscape Irrigation Areas	inches/acre/month	Calculate	1/month	--

1 Report total flow for each day when reclaimed water is used for landscape irrigation.

IX. RECEIVING WATER MONITORING REQUIREMENTS – SURFACE WATER

A. Monitoring Location RSW-001 and RSW-002

1. The Discharger shall monitor Magnolia Creek at RSW-001 and RSW-002 as follows:

Table E-8. Receiving Water Monitoring Requirements

Parameter	Units	Sample Type	Minimum Sampling Frequency	Required Analytical Test Method
Dissolved Oxygen	mg/L	Grab	1/week	[1]
pH	Standard Units	Grab	1/week	[1]
Temperature	°F (°C)	Grab	1/week	[1]

Parameter	Units	Sample Type	Minimum Sampling Frequency	Required Analytical Test Method
Electrical Conductivity @ 25°C	µmhos/cm	Grab	1/week	[1]
Turbidity	NTU	Meter	1/week	[1]
Radionuclides	pCi/L	Grab	1/year	[1]
Floating or suspended matter	Narrative	Visual	1/week	--
Discoloration	Narrative	Visual	1/week	--
Bottom Deposits	Narrative	Visual	1/week	--
Aquatic Life	Narrative	Visual	1/week	--
Visible films, sheens	Narrative	Visual	1/week	--
Fungi, slimes, or objectionable growths	Narrative	Visual	1/week	--
Potential nuisance conditions	Narrative	Visual	1/week	--
Foam	Narrative	Visual	1/week	--

[1] As per 40 CFR Part 136

B. Ground Water Monitoring – Not Applicable

X. OTHER MONITORING REQUIREMENTS

A. Biosolids

1. Monitoring Location BIO-001

1. A composite sample of sludge shall be collected annually at Monitoring Location BIO-001 in accordance with EPA's POTW *Sludge Sampling and Analysis Guidance Document*, August 1989, and tested for metals listed in 40 CFR section 122 Appendix D, Table III (excluding total phenols).

2. Sampling records shall be retained for a minimum of **5 years**. A log shall be kept of sludge quantities generated and of handling and disposal activities. The frequency of entries is discretionary; however, the log should be complete enough to serve as a basis for part of the annual report.

3. Upon removal of sludge, the Discharger shall submit characterization of sludge quality, including sludge percent solids and the most recent quantitative results of chemical analysis for the metals listed in 40 CFR 122 Appendix D, Table III (excluding total phenols). In addition to USEPA's *POTW Sludge Sampling and Analysis Guidance Document*, August 1989, suggested methods for analysis of sludge are provided in USEPA publications titled "*Test Methods for Evaluating Solid Waste: Physical/Chemical Methods*" and "*Test Methods for Organic Chemical Analysis of Municipal and Industrial Wastewater*". Recommended analytical holding times for sludge samples should reflect those specified in 40 CFR 136.6.3(e).

B. Municipal Water Supply

1. Monitoring Location SPL-001

The Discharger shall monitor the Municipal Water Supply at SPL-001 as follows. A sampling station shall be established where a representative sample of the municipal water supply can be obtained. Municipal water supply samples shall be collected at approximately the same time as effluent samples.

Table E-10. Municipal Water Supply Monitoring Requirements

Parameter	Units	Sample Type	Minimum Sampling Frequency	Required Analytical Test Method
Total Dissolved Solids	mg/L	Grab	1/year	
Electrical Conductivity @ 25°C[1]	µmhos/cm	Grab	1/year	
Standard Minerals[2]	mg/L	Grab	1/year	[2]

[1] If the water supply is from more than one source, the EC shall be reported as a weighted average and include copies of supporting calculations.
[2] Standard minerals shall include all major cations and anions and include verification that the analysis is complete (i.e., cation/anion balance).

C. Ultraviolet Disinfection System

1. Monitoring Location UVS-001

The Discharger shall monitor UVS-001 as follows:

Table E-11. Ultraviolet Disinfection System Monitoring Requirements

Parameter	Units	Sample Type	Minimum Sampling Frequency
Flow rate	MGD	Meter	Continuous
Turbidity[1]	NTU	Meter	Continuous
Number of UV banks in operation	Number	Meter	Continuous
UV Transmittance	Percent (%)	Meter	Continuous
UV Power Setting	Percent (%)	Meter	Continuous
UV Dose[2]	MW-sec/cm^2	Calculated	Continuous

[1] Report daily average turbidity and maximum. If the influent exceeds 10 NTU, collect a sample for total coliform and report the duration of the turbidity exceedance.
[2] Report daily minimum UV dose, daily average UV dose, and weekly average UV dose. For the daily minimum UV dose, also report associated number of banks, gallons per minute per lamp, power settings, and UV transmittance used in the calculation. If effluent discharge has received less than the minimum UV dose and is not diverted from discharging to Magnolia Creek, report the duration and dose calculation variables associated with each incident.

XI. REPORTING REQUIREMENTS

A. General Monitoring and Reporting Requirements

1. The Discharger shall comply with all Standard Provisions (Attachment D) related to monitoring, reporting, and recordkeeping.

2. Upon written request of the Regional Water Board, the Discharger shall submit a summary monitoring report. The report shall contain both tabular and graphical summaries of the monitoring data obtained during the previous year(s).

3. **Compliance Time Schedules.** Not applicable.

4. The Discharger shall report to the Regional Water Board any toxic chemical release data it reports to the State Emergency Response Commission within 15 days of reporting the data to the Commission pursuant to section 313 of the "Emergency Planning and Community Right to Know Act of 1986.

5. **Reporting Protocols.** The Discharger shall report with each sample result the applicable Reporting Level (RL) and the current Method Detection Limit (MDL), as determined by the procedure in 40 CFR Part 136. For priority pollutants, RLs and MDLs not need to be reported on USEPA form 3320-1.

   The Discharger shall report the results of analytical determinations for the presence of chemical constituents in a sample using the following reporting protocols:

   a. Sample results greater than or equal to the RL shall be reported as measured by the laboratory (i.e., the measured chemical concentration in the sample).

   b. Sample results less than the RL, but greater than or equal to the laboratory's MDL, shall be reported as "Detected, but Not Quantified," or DNQ. The estimated chemical concentration of the sample shall also be reported.

      For the purposes of data collection, the laboratory shall write the estimated chemical concentration next to DNQ as well as the words "Estimated Concentration" (may be shortened to "Est. Conc."). The laboratory may, if such information is available, include numerical estimates of the data quality for the reported result. Numerical estimates of data quality may be percent accuracy (± a percentage of the reported value), numerical ranges (low to high), or any other means considered appropriate by the laboratory.

   c. Sample results less than the laboratory's MDL shall be reported as "Not Detected," or ND.

   d. Dischargers are to instruct laboratories to establish calibration standards so that the ML value (or its equivalent if there is differential treatment of samples relative to calibration standards) is the lowest calibration standard. At no time is the Discharger to use analytical data derived from *extrapolation* beyond the lowest point of the calibration curve.

6. **Multiple Sample Data.** When determining compliance with an AMEL , AWEL, or MDEL for priority pollutants and more than one sample result is available, the Discharger shall compute the arithmetic mean unless the data set contains one or more reported determinations of "Detected, but Not Quantified" (DNQ) or "Not Detected" (ND). In those cases, the Discharger shall compute the median in place of the arithmetic mean in accordance with the following procedure:

   a. The data set shall be ranked from low to high, ranking the reported ND determinations lowest, DNQ determinations next, followed by quantified values (if any). The order of the individual ND or DNQ determinations is unimportant.

   b. The median value of the data set shall be determined. If the data set has an odd number of data points, then the median is the middle value. If the data set has an even number of data points, then the median is the average of the two values around the middle unless one or both of the points are ND or DNQ, in which case the median value shall be the lower of the two data points where DNQ is lower than a value and ND is lower than DNQ.

B. Self Monitoring Reports (SMRs)

1. At any time during the term of this permit, the State or Regional Water Board may notify the Discharger to electronically submit Self-Monitoring Reports (SMRs) using the State Water Board's California Integrated Water Quality System (CIWQS) Program Web site (http://www.waterboards.ca.gov/ciwqs/index.html). Until such notification is given, the Discharger shall submit hard copy SMRs. The CIWQS Web site will provide additional directions for SMR submittal in the event there will be service interruption for electronic submittal.

2. Monitoring results shall be submitted to the Regional Water Board as specified in Table E-12.

3. In reporting the monitoring data, the Discharger shall arrange the data in tabular form so that the date, the constituents, and the concentrations are readily discernible. The data shall be summarized in such a manner to illustrate clearly whether the discharge complies with waste discharge requirements. The highest daily maximum for the month, monthly and weekly averages, and medians, and removal efficiencies (%) for BOD and Total Suspended Solids, shall be determined and recorded as needed to demonstrate compliance.

4. With the exception of flow, all constituents monitored on a continuous basis (metered), shall be reported as daily maximums, daily minimums, and daily averages; flow shall be reported as the total volume discharged per day for each day of discharge.

5. If the Discharger monitors any pollutant at the locations designated herein more frequently than is required by this Order, the results of such monitoring shall be included in the calculation and reporting of the values required in the discharge

monitoring report form. Such increased frequency shall be indicated on the discharge monitoring report form.

6. A letter transmitting the self-monitoring reports shall accompany each report. Such a letter shall include a discussion of requirement violations found during the reporting period, and actions taken or planned for correcting noted violations, such as operation or facility modifications. If the Discharger has previously submitted a report describing corrective actions and/or a time schedule for implementing the corrective actions, reference to the previous correspondence will be satisfactory. The transmittal letter shall contain the penalty of perjury statement by the Discharger, or the Discharger's authorized agent, as described in the Standard Provisions.

7. SMRs must be submitted to the Regional Water Board, signed and certified as required by the Standard Provisions (Attachment D), to the address listed below:

   Regional Water Quality Control Board
   Central Valley Region
   11020 Sun Center Dr., Suite #200
   Rancho Cordova, CA 95670-6114

8. Monitoring periods and reporting for all required monitoring shall be completed according to the following schedule:

Table E-12. Monitoring Periods and Reporting Schedule

Sampling Frequency	Monitoring Period Begins On…	Monitoring Period	SMR Due Date
Continuous	Permit effective date	All	First day of second calendar month following month of sampling
1/day	Permit effective date	(Midnight through 11:59 PM) or any 24-hour period that reasonably represents a calendar day for purposes of sampling.	First day of second calendar month following month of sampling
1/week	Sunday following permit effective date or on permit effective date if on a Sunday	Sunday through Saturday	First day of second calendar month following month of sampling
2/week	Sunday following permit effective date or on permit effective date if on a Sunday	Sunday through Saturday	First day of second calendar month following month of sampling
3/week	Sunday following permit effective date or on permit effective date if on a Sunday	Sunday through Saturday	First day of second calendar month following month of sampling
1/month	First day of calendar month following permit effective date or on permit effective date if that date is first day of the month	First day of calendar month through last day of calendar month	First day of second calendar month following month of sampling
1/quarter	Closest of 1 January, 1 April, 1 July, or 1 October following (or on) permit effective date	1 January through 31 March 1 April through 30 June 1 July through 30 September 1 October through 31 December	45 days from the end of the monitoring period
2/year	Closest of 1 January or 1 July following permit effective date	1 January through 31 December	45 days from the end of the monitoring period
1/year	1 January following (or on) permit effective date	1 January through 31 December	45 days from the end of the monitoring period

C. Discharge Monitoring Reports (DMRs)

1. As described in Section X.B.1 above, at any time during the term of this permit, the State or Regional Water Board may notify the Discharger to electronically submit SMRs that will satisfy federal requirements for submittal of Discharge Monitoring Reports (DMRs). Until such notification is given, the Discharger shall submit DMRs in accordance with the requirements described below.

2. DMRs must be signed and certified as required by the standard provisions (Attachment D). The Discharger shall submit the original DMR and one copy of the DMR to the address listed below:

Standard Mail	FedEx/UPS/ Other Private Carriers
State Water Resources Control Board Division of Water Quality c/o DMR Processing Center PO Box 100 Sacramento, CA 95812-1000	State Water Resources Control Board Division of Water Quality c/o DMR Processing Center 1001 I Street, 15th Floor Sacramento, CA 95814

3. All discharge monitoring results must be reported on the official USEPA pre-printed DMR forms (EPA Form 3320-1). Forms that are self-generated cannot be accepted unless they follow the exact same format as EPA form 3320-1.

D. Other Reports

1. Within **60 days** of permit adoption, the Discharger shall submit a report outlining minimum levels, method detection limits, and analytical methods for approval, with a goal to achieve detection levels below applicable water quality criteria. At a minimum, the Discharger shall comply with the monitoring requirements for CTR constituents as outlined in Section 2.3 and 2.4 of the SIP.

2. The Discharger's sanitary sewer system collects wastewater using sewers, pipes, pumps, and/or other conveyance systems and directs the raw sewage to the wastewater treatment plant. A "sanitary sewer overflow" is defined as a discharge to ground or surface water from the sanitary sewer system at any point upstream of the wastewater treatment plant. Sanitary sewer overflows are prohibited by this Order. All violations must be reported as required in Standard Provisions. Facilities (such as wet wells, regulated impoundments, tanks, highlines, *etc*.) may be part of a sanitary sewer system and discharges to these facilities are not considered sanitary sewer overflows, provided that the waste is fully contained within these temporary storage facilities.

3. **Annual Operations Report**. By **1 February** of each year, the Discharger shall submit a written report to the Executive Officer containing the following:

   a. The names, certificate grades, and general responsibilities of all persons employed at the Facility.

   b. The names and telephone numbers of persons to contact regarding the plant for emergency and routine situations.

   c. A statement certifying when the flow meter(s) and other monitoring instruments and devices were last calibrated, including identification of who performed the calibration.

   d. A statement certifying whether the current operation and maintenance manual, and contingency plan, reflect the wastewater treatment plant as currently constructed and operated, and the dates when these documents were last revised and last reviewed for adequacy.

e. The Discharger may also be requested to submit an annual report to the Regional Water Board with both tabular and graphical summaries of the monitoring data obtained during the previous year. Any such request shall be made in writing. The report shall discuss the compliance record. If violations have occurred, the report shall also discuss the corrective actions taken and planned to bring the discharge into full compliance with the waste discharge requirements.

ATTACHMENT F – FACT SHEET

Table of Contents

Attachment F – Fact Sheet F-3
I. Permit Information F-3
II. Facility Description F-4
A. Description of Wastewater and Biosolids Treatment or Controls F-4
B. Discharge Points and Receiving Waters F-6
C. Summary of Historical Requirements and Self-Monitoring Report (SMR) Data F-6
D. Compliance Summary F-7
E. Planned Changes F-7
III. Applicable Plans, Policies, and Regulations F-8
A. Legal Authority F-8
B. California Environmental Quality Act (CEQA) F-8
C. State and Federal Regulations, Policies, and Plans F-8
D. Impaired Water Bodies on CWA 303(d) List – Not Applicable F-9
E. Other Plans, Polices and Regulations F-9
IV. Rationale For Effluent Limitations and Discharge Specifications F-10
A. Discharge Prohibitions F-11
B. Technology-Based Effluent Limitations F-11
1. Scope and Authority F-11
2. Applicable Technology-Based Effluent Limitations F-12
C. Water Quality-Based Effluent Limitations (WQBELs) F-13
1. Scope and Authority F-13
2. Applicable Beneficial Uses and Water Quality Criteria and Objectives F-14
3. Determining the Need for WQBELs F-15
4. WQBEL Calculations F-27
5. Whole Effluent Toxicity (WET) F-29
D. Final Effluent Limitations F-30
1. Mass-based Effluent Limitations. F-30
2. Averaging Periods for Effluent Limitations. F-30
3. Satisfaction of Anti-Backsliding Requirements. F-31
4. Satisfaction of Antidegradation Policy F-32
E. Interim Effluent Limitations – Not Applicable F-33
F. Landscape Discharge Specifications - Not applicable F-33
G. Reclamation Specifications F-33
V. Rationale for Receiving Water Limitations F-34
A. Surface Water F-34
B. Groundwater F-35
VI. Rationale for Monitoring and Reporting Requirements F-35
A. Influent Monitoring F-35
B. Effluent Monitoring F-36
C. Whole Effluent Toxicity Testing Requirements F-36
D. Receiving Water Monitoring F-36
1. Surface Water F-36
2. Groundwater F-36

E. Other Monitoring Requirements F-37
VII. Rationale for Provisions F-37
A. Standard Provisions F-37
B. Special Provisions F-38
1. Reopener Provisions F-38
2. Special Studies and Additional Monitoring Requirements F-38
3. Best Management Practices and Pollution Prevention F-42
4. Construction, Operation, and Maintenance Specifications F-42
5. Special Provisions for Municipal Facilities (POTWs Only) F-43
6. Other Special Provisions F-44
7. Compliance Schedules – Not Applicable F-44
VIII. Public Participation F-44
A. Notification of Interested Parties F-44
B. Written Comments F-44
C. Public Hearing F-44
D. Waste Discharge Requirements Petitions F-45
E. Information and Copying F-45
F. Register of Interested Persons F-45
G. Additional Information F-45

List of Tables

Table F-1. Facility Information F-3
Table F-2. Historic Effluent Limitations and Monitoring Data F-6
Table F-3. Monitoring Data for New Treatment Facility F-7
Table F-4. Summary of Technology-based Effluent Limitations F-13
Table F-5. Salinity Water Quality Criteria/Objectives F-24
Table F-6. WQBEL Calculations for Ammonia F-28
Table F-7. Summary of Water Quality-based Effluent Limitations F-29
Table F-8. Summary of Final Effluent Limitations F-33

ATTACHMENT F – FACT SHEET

As described in section II of this Order, this Fact Sheet includes the legal requirements and technical rationale that serve as the basis for the requirements of this Order.

This Order has been prepared under a standardized format to accommodate a broad range of discharge requirements for Dischargers in California. Only those sections or subsections of this Order that are specifically identified as "not applicable" have been determined not to apply to this Discharger. Sections or subsections of this Order not specifically identified as "not applicable" are fully applicable to this Discharger.

I. PERMIT INFORMATION

The following table summarizes administrative information related to the facility.

Table F-1. Facility Information

WDID	5A290104003
Discharger	Nevada County Sanitation District No. 1
Name of Facility	Lake of the Pines Wastewater Treatment Plant
Facility Address	10903 Riata Way
	Auburn, CA 95602
	Nevada County
Facility Contact, Title and Phone	Wayne Robison, Plant Operator, (530) 268-1312
Authorized Person to Sign and Submit Reports	Mark Miller, Director of Sanitation, (530) 265-1351
Mailing Address	950 Maidu Avenue, Nevada City, CA 95959
Billing Address	950 Maidu Avenue, Nevada City, CA 95959
Type of Facility	Publicly Owned Treatment Works (POTW)
Major or Minor Facility	Minor
Threat to Water Quality	2
Complexity	B
Pretreatment Program	N
Reclamation Requirements	N/A
Facility Permitted Flow	0.72 million gallons per day (MGD) average dry weather flow (ADWF)
Facility Design Flow	0.72 million gallons per day (MGD) ADWF
Watershed	Bear River Hydrologic Unit, Upper Bear Hydrolgic Area (HA), Lake Combie Hydrologic Sub-Area (HSA)
Receiving Water	Magnolia Creek
Receiving Water Type	Inland Surface Water

A. Nevada County Sanitation District No. 1 (hereinafter Discharger) is the owner and operator of Lake of the Pines Wastewater Treatment Plant (hereinafter Facility), a POTW.

For the purposes of this Order, references to the "discharger" or "permittee" in applicable federal and state laws, regulations, plans, or policy are held to be equivalent to references to the Discharger herein.

B. The Facility discharges wastewater to Magnolia Creek, a water of the United States, and is currently regulated by Order No. R5-2002-0095, which was adopted on 7 June 2002 and expired on 7 June 2007. The terms and conditions of the current Order have been automatically continued and remain in effect until new Waste Discharge Requirements (WDRs) and National Pollutant Discharge Elimination System (NPDES) permit are adopted pursuant to this Order.

C. The Discharger filed a report of waste discharge and submitted an application for renewal of its WDRs and NPDES permit on 6 December 2006. The supporting monitoring data submitted with the report of waste discharge was for the treatment facility in use at that time. The Discharger constructed a new treatment facility, which was put in operation in April 2008. Additional monitoring data was requested and a site visit was conducted on 20 May 2008 to inspect the new treatment facility. The Discharger submitted monitoring for the first 7 months of operation of the new treatment facility. This new monitoring information was used to develop permit conditions and limitations.

II. FACILITY DESCRIPTION

The Discharger provides sewerage service for the community of Lake the Pines and serves a population of approximately 1,800 residences. The Facility is located on a 105-acre parcel just west of the Lake of the Pines community (See Attachment B). The Facility design daily ADWF capacity is 0.72 MGD.

A. Description of Wastewater and Biosolids Treatment or Controls

The previous permit Order No. R5-2002-0095 regulated discharge from a secondary treatment facility with treatment in an aerated lagoon followed by three storage ponds. The disinfected secondary effluent was applied by spray irrigation to 55-acres of grassland from April through October. During the winter months, coagulation, filtration, disinfection, and dechloroination processes were added to the treatment process and the effluent was discharged to Magnolia Creek. Alum and polymer coagulants were added prior to filtration. Disinfection was accomplished using chlorine followed by dechlorination with sulfur dioxide.

The Discharger constructed a new treatment facility and all new systems were fully operational by June 2008. The majority of the old treatment facilities (aerated lagoon, flocculation basin, multimedia filters, chlorination disinfection system, chemical feed systems, storage ponds and spray irrigation fields) are no longer integral to the treatment

and disposal trains. The aeration basin can be used as emergency storage basin. The Discharger proposes to use treated effluent to keep the existing storage ponds full for wildlife habitat and onsite landscape irrigation. The new facilities are designed to treat 0.72 MGD ADWF. Tertiary treatment is required when effluent is discharged to Magnolia Creek or to the on site ponds. This Order allows for year-round discharge to Magnolia Creek. The new facilities completed in 2008 include the following (See attachment C):

1. Pump station: The two existing influent pumps were replaced with three 1,800 gallon per minute (gpm) pumps with variable speed motors. A new 8-inch magnetic flow meter was installed downstream of the rehabilitated pump station.

2. Preliminary treatment: Preliminary treatment for the new facility consists of course screens, grit removal, followed by fine screening. The course screens are used for removal of large debris that could damage downstream mechanical equipment. One course screen is provided with the ability to bypass the screen to a manually cleaned bar rack with 6 mm bar spacing. Fine screening (2mm screen opening size) prior to the Microfiltration Membrane Bioreactor (MBR) system protects the membranes from damage that could be caused by debris and non-organic matter in the waste stream. Screened solids that have been washed and compacted are collected and disposed offsite.

3. Treatment and filtration: The biological treatment system consists of a series of treatment tanks used for BOD reduction, nitrogen removal, phosphorous removal and solids separation. Solids separation is accomplished using a MBR system (0.4 microns pore size) that is immersed in the activated sludge mixed liquor. Treated effluent is pulled through the membranes by vacuum conditions created by a series of permeate pumps. The MBR system provides the required tertiary treatment with effluent turbidities less than 1 NTU. The biological treatment system is configured in two identical parallel treatment trains so that a single train can be taken off-line for maintenance during dry months of the year.

4. Disinfection: The chlorine disinfection system has been replaced by ultraviolet (UV) irradiation using low pressure, high intensity lamps equipped with an automatic sleeve cleaning system. The new disinfection system was installed in one of the channels in the existing chlorine contact tank.

5. Solid handling: Waste activated sludge (WAS) produced from the bacterial assimilation of dissolved organic material is wasted from the MBR tanks. The WAS is digested in new aerobic sludge digesters followed by centrifuge dewatering. A membrane thickener is used prior to the aerobic digestion tanks; installation of a centrifuge dewatering system. Polymer is injected into the feed sludge flow prior to the centrifuge to aid in dewatering. Dewatered solids are disposed in a landfill.

6. Yard Piping: An additional 12-inch influent force main was installed parallel to the existing force main. A new 18-inch effluent discharge pipe was installed parallel to the existing 12-inch outfall pipe to Magnolia Creek. The additional pipe allows the plant to discharge peak flows of 4 MGD.

7. Electrical and Control: The existing 240-volt service was replaced with 480-volt service and an 800 kW emergency standby generator with an automatic transfer switch was added. A Supervisory Control and Data Acquisition (SCADA) system was installed. The SCADA system monitors the biological treatment processes, equipment status, plant flow rates, and records effluent quality data.

8. Site Improvements: Several site improvements were included in the design of the new plant. These improvements included a new administration building and demolition of unneeded facilities.

B. Discharge Points and Receiving Waters

1. The Facility is located in Section 27 and 28, T14N, R8E, MDB&M, as shown in Attachment B, a part of this Order.

2. Treated municipal wastewater is discharged at Discharge Point No. 001 to Magnolia Creek, a water of the United States and a tributary to the Bear River at a point latitude 39° 02' 00" N and longitude 121° 05' 01" W.

C. Summary of Historical Requirements and Self-Monitoring Report (SMR) Data

Effluent limitations contained in Order No. R5-2002-0095 for discharges from Monitoring Location EFF-001 and representative monitoring data from the term of the previous Order are as follows:

Table F-2. Historic Effluent Limitations and Monitoring Data

Parameter	Units	Effluent Limitation			Monitoring Data (From June 2002 To August 2007)	
		Average Monthly	Average Weekly	Maximum Daily	Highest Average Monthly	Highest Daily Discharge
BOD 5-day @ 20 °C	mg/L	15	20	30	--	38
Total Suspended Solids	mg/L	15	20	40	--	82
Ammonia	mg/L	--	Floating Limit (pH-Temperature Dependent)	Floating Limit (pH Dependent)	--	25.4
Settable Solids	ml/L	0.1	--	0.2	--	110
Total Coliform Organisms	MPN/100 mL	2.2	--	23	--	30
Total Residual Chlorine	mg/L	--	0.01	0.02	--	0
Nitrate+Nitrite	mg/L	10	--	--	5.16	--
Nitrite	mg/L	1	--	--	25	--
Aluminum	µg/L	--	87	750	--	1,820

D. Compliance Summary

1. The Discharger had difficulty complying with the effluent limitations contained in Order No. R5-2002-0095 with the level of treatment provided by the facility processes in place at the time that Order No. R5-2002-0095 was adopted. The Regional Water Board adopted Cease and Desist Order (CDO) No. R5-2002-0096 and Time Schedule Order (TSO) No. R5-2002-0072 requiring the Discharger to develop new or modified control measures to comply with the effluent limitations for 5-day biochemical oxygen demand (BOD_5), total suspended solids (TSS), settleable solids, total coliform organisms, turbidity, ammonia, nitrate plus nitrite, and aluminum. The Discharger implemented operation of the new treatment facility in June 2008 and monitoring data for the period June 2008 to December 2008 indicates that operation of the new facility has resulted in compliance with effluent limitations in Order No. R5-2002-0095. A summary of the monitoring data from Monitoring Location EFF-001 after startup of the new facility follows:

Table F-3. Monitoring Data for New Treatment Facility

Parameter	Units	Effluent Limitation			Monitoring Data (From June 2008 To December 2008)	
		Average Monthly	Average Weekly	Maximum Daily	Highest Average Monthly	Highest Daily Discharge
BOD 5-day @ 20 °C	mg/L	15	20	30	2.03	2.2
Total Suspended Solids	mg/L	15	20	40	1.0	1.1
Ammonia	mg/L	--	Floating Limit (pH-Temperature Dependent)	Floating Limit (pH Dependent)	0.5	1.3
Settable Solids	ml/L	0.1	--	0.2	<0.05	<0.05
Total Coliform Organisms	MPN/100 mL	2.2	--	23	1	2
Total Residual Chlorine	mg/L	--	0.01	0.02	Chlorine disinfection replaced by UV disinfection.	
Nitrate+Nitrite	mg/L	10	--	--	2.31	3.54
Nitrite	mg/L	1	--	--	0.79	1.52
Aluminum	µg/L	--	87	750	17.6	25.5

E. Planned Changes

The Discharger plans to add a recycled water supply system to reduce use of potable water for plant use. The Discharger also plans on removal of accumulated sludge from the

existing aeration pond and conversion of the pond to emergency storage with the addition of an automatic emergency bypass valve.

III. APPLICABLE PLANS, POLICIES, AND REGULATIONS

The requirements contained in this Order are based on the applicable plans, policies, and regulations identified in section II of this Order. The applicable plans, policies, and regulations relevant to the discharge include the following:

A. Legal Authority

This Order is issued pursuant to regulations in the Clean Water Act (CWA) and the California Water Code (CWC) as specified in the Finding contained at section II.C of this Order.

B. California Environmental Quality Act (CEQA)

This Order meets the requirements of CEQA as specified in the Finding contained at section II.E of this Order.

C. State and Federal Regulations, Policies, and Plans

1. **Water Quality Control Plans**. This Order implements the Water Quality Control Plan, Fourth Edition (Revised October 2007) for the Sacramento and San Joaquin River Basins as specified in the Finding contained at section II.H of this Order.

2. **National Toxics Rule (NTR) and California Toxics Rule (CTR).** This Order implements the NTR and CTR as specified in the Finding contained at section II.I of this Order.

3. **State Implementation Policy (SIP).** This Order implements the SIP as specified in the Finding contained at section II.J of this Order.

4. **Alaska Rule.** This Order is consistent with the Alaska Rule as specified in the Finding contained at section II.L of this Order.

5. **Antidegradation Policy.** As specified in the Finding contained at section II.N of this Order and as discussed in detail in the Fact Sheet (Attachment F, Section IV.D.4.) the discharge is consistent with the antidegradation provisions of 40 CFR section 131.12 and State Water Board Resolution 68-16.

6. **Anti-Backsliding Requirements.** This Order is consistent with anti-backsliding policies as specified in the Finding contained at section II O of this Order. Compliance with the Anti-Backsliding requirements is discussed in the Fact Sheet (Attachment F Section IV.D.3.).

7. **Emergency Planning and Community Right to Know Act**. Section 13263.6(a), California Water Code, requires that "t*he Regional Water Board shall prescribe*

effluent limitations as part of the waste discharge requirements of a POTW for all substances that the most recent toxic chemical release data reported to the state emergency response commission pursuant to Section 313 of the Emergency Planning and Community Right to Know Act of 1986 (42 U.S.C. Sec. 11023) (EPCRKA) indicate as discharged into the POTW, for which the State Water Board or the Regional Water Board has established numeric water quality objectives, and has determined that the discharge is or may be discharged at a level which will cause, have the reasonable potential to cause, or contribute to, an excursion above any numeric water quality objective".

The most recent toxic chemical data report does not indicate any reportable off-site releases or discharges to the collection system for this facility. Therefore, a reasonable potential analysis based on information from Emergency Planning and Community Right to Know Act (EPCRA) cannot be conducted. Based on information from EPCRA, there is no reasonable potential to cause or contribute to an excursion above any numeric water quality objectives included within the Basin Plan or in any State Water Board plan, so no effluent limitations are included in this permit pursuant to CWC section 13263.6(a).

However, as detailed elsewhere in this Order, available effluent data indicate that there are constituents present in the effluent that have a reasonable potential to cause or contribute to exceedances of water quality standards and require inclusion of effluent limitations based on federal and state laws and regulations.

8. **Stormwater Requirements.** USEPA promulgated Federal Regulations for storm water on 16 November 1990 in 40 CFR Parts 122, 123, and 124. The NPDES Industrial Storm Water Program regulates storm water discharges from wastewater treatment facilities. Wastewater treatment plants are applicable industries under the stormwater program and are obligated to comply with the Federal Regulations.

9. **Endangered Species Act.** This Order is consistent with the Endangered Species Act as specified in the Finding contained at section II.P of this Order.

D. Impaired Water Bodies on CWA 303(d) List – Not Applicable

E. Other Plans, Polices and Regulations

1. The discharge authorized herein and the treatment and storage facilities associated with the discharge of treated municipal wastewater, except for discharges of residual sludge and solid waste, are exempt from the requirements of Title 27, California Code of Regulations (CCR), section 20005 *et seq*. (hereafter Title 27). The exemption, pursuant to Title 27 CCR section 20090(a), is based on the following:

    a. The waste consists primarily of domestic sewage and treated effluent;

    b. The waste discharge requirements are consistent with water quality objectives; and

c. The treatment and storage facilities described herein are associated with a municipal wastewater treatment plant.

IV. RATIONALE FOR EFFLUENT LIMITATIONS AND DISCHARGE SPECIFICATIONS

Effluent limitations and toxic and pretreatment effluent standards established pursuant to Sections 301 (Effluent Limitations), 302 (Water Quality Related Effluent Limitations), 304 (Information and Guidelines), and 307 (Toxic and Pretreatment Effluent Standards) of the Clean Water Act (CWA) and amendments thereto are applicable to the discharge.

The CWA mandates the implementation of effluent limitations that are as stringent as necessary to meet water quality standards established pursuant to state or federal law [33 U.S.C., § 1311(b)(1)(C); 40 CFR, § 122.44(d)(1)]. NPDES permits must incorporate discharge limits necessary to ensure that water quality standards are met. This requirement applies to narrative criteria as well as to criteria specifying maximum amounts of particular pollutants. Pursuant to Federal Regulations, 40 CFR Section 122.44(d)(1)(i), NPDES permits must contain limits that control all pollutants that "*are or may be discharged at a level which will cause, have the reasonable potential to cause, or contribute to an excursion above any state water quality standard, including state narrative criteria for water quality*." Federal Regulations, 40 CFR, §122.44(d)(1)(vi), further provide that "[w]*here a state has not established a water quality criterion for a specific chemical pollutant that is present in an effluent at a concentration that causes, has the reasonable potential to cause, or contributes to an excursion above a narrative criterion within an applicable State water quality standard, the permitting authority must establish effluent limits.*"

The CWA requires point source discharges to control the amount of conventional, non-conventional, and toxic pollutants that are discharged into the waters of the United States. The control of pollutants discharged is established through effluent limitations and other requirements in NPDES permits. There are two principal bases for effluent limitations: 40 CFR §122.44(a) requires that permits include applicable technology-based limitations and standards, and 40 CFR §122.44(d) requires that permits include water quality-based effluent limitations to attain and maintain applicable numeric and narrative water quality criteria to protect the beneficial uses of the receiving water where numeric water quality objectives have not been established. The Basin Plan at page IV-17.00, contains an implementation policy ("Policy for Application of Water Quality Objectives") that specifies that the Regional Water Board "*will, on a case-by-case basis, adopt numerical limitations in orders which will implement the narrative objectives*." This Policy complies with 40 CFR §122.44(d)(1). With respect to narrative objectives, the Regional Water Board must establish effluent limitations using one or more of three specified sources, including (1) USEPA's published water quality criteria, (2) a proposed state criterion (*i.e*., water quality objective) or an explicit state policy interpreting its narrative water quality criteria (*i.e*., the Regional Water Board's "Policy for Application of Water Quality Objectives")(40 CFR 122.44(d)(1) (vi) (A), (B) or (C)), or (3) an indicator parameter.

The Basin Plan includes numeric site-specific water quality objectives and narrative objectives for toxicity, chemical constituents, discoloration, radionuclides and tastes and odors. The narrative toxicity objective states: "*All waters shall be maintained free of toxic substances in concentrations that produce detrimental physiological responses in human, plant, animal, or aquatic life*" (Basin Plan at III-8,00). The Basin Plan states that material and relevant information, including numeric criteria, and recommendations from other agencies and scientific literature will be utilized in evaluating compliance with the narrative toxicity objective. The narrative chemical constituents objective states that waters shall not contain chemical constituents in concentrations that adversely affect beneficial uses. At minimum, "…*water designated for use as domestic or municipal supply (MUN) shall not contain concentrations of chemical constituents in excess of the maximum contaminant levels (MCLs)" in Title 22 of CCR.* The Basin Plan further states that, to protect all beneficial uses, the Regional Water Board may apply limits more stringent than MCLs. The narrative tastes and odors objective states: *"Water shall not contain taste- or odor-producing substances in concentrations that impart undesirable tastes or odors to domestic or municipal water supplies or to fish flesh or other edible products of aquatic origin, or that cause nuisance, or otherwise adversely affect beneficial uses*."

A. Discharge Prohibitions

1. As stated in section I.G of Attachment D, Standard Provisions, this Order prohibits bypass from any portion of the treatment facility. Federal Regulations, 40 CFR 122.41 (m), define "bypass" as the intentional diversion of waste streams from any portion of a treatment facility. This section of the Federal Regulations, 40 CFR 122.41 (m)(4), prohibits bypass unless it is unavoidable to prevent loss of life, personal injury, or severe property damage. In considering the Regional Water Board's prohibition of bypasses, the State Water Board adopted a precedential decision, Order No. WQO 2002-0015, which cites the Federal Regulations, 40 CFR 122.41(m), as allowing bypass only for essential maintenance to assure efficient operation.

B. Technology-Based Effluent Limitations

1. Scope and Authority

Regulations promulgated in section 125.3(a)(1) require technology-based effluent limitations for municipal Dischargers to be placed in NPDES permits based on Secondary Treatment Standards or Equivalent to Secondary Treatment Standards.

The Federal Water Pollution Control Act Amendments of 1972 (PL 92-500) established the minimum performance requirements for POTWs [defined in section 304(d)(1)]. Section 301(b)(1)(B) of that Act requires that such treatment works must, as a minimum, meet effluent limitations based on secondary treatment as defined by the USEPA Administrator.

Based on this statutory requirement, USEPA developed secondary treatment regulations, which are specified in 40 CFR Part 133. These technology-based regulations apply to all municipal wastewater treatment plants and identify the minimum level of effluent quality attainable by secondary treatment in terms of BOD_5, TSS, and pH.

2. Applicable Technology-Based Effluent Limitations

a. **BOD_5 and TSS.** Federal Regulations, 40 CFR, Part 133, establish the minimum weekly and monthly average level of effluent quality attainable by secondary treatment for BOD_5 and TSS. Tertiary treatment is necessary to protect the beneficial uses of the receiving stream and the final effluent limitations for BOD_5 and TSS are based on the technical capability of the tertiary process. BOD_5 is a measure of the amount of oxygen used in the biochemical oxidation of organic matter. The secondary and tertiary treatment standards for BOD_5 and TSS are indicators of the effectiveness of the treatment processes. The principal design parameter for wastewater treatment plants is the daily BOD_5 and TSS loading rates and the corresponding removal rate of the system. In applying 40 CFR Part 133 for weekly and monthly average BOD_5 and TSS limitations, the application of tertiary treatment processes results in the ability to achieve lower levels for BOD_5 and TSS than the secondary standards currently prescribed; the 30-day average BOD_5 and TSS limitations have been revised to 10 mg/L, which is technically based on the capability of the new tertiary system. In addition to the average weekly and average monthly effluent limitations, a daily maximum effluent limitation for BOD_5 and TSS is included in the Order to ensure that the treatment works are not organically overloaded and operate in accordance with design capabilities. In addition, 40 CFR 133.102, in describing the minimum level of effluent quality attainable by secondary treatment, states that the 30-day average percent removal shall not be less than 85 percent. If 85 percent removal of BOD_5 and TSS must be achieved by a secondary treatment plant, it must also be achieved by a tertiary (i.e., treatment beyond secondary level) treatment plant. This Order contains a limitation requiring an average of 85 percent removal of BOD_5 and TSS over each calendar month.

   Final discharge limitations in this Order are based on the technical capability of tertiary wastewater treatment systems. Technology based limitations are utilized to assure the treatment systems are properly designed and operated. Discharge limitations have been established for tertiary treatment or equivalent as 10 mg/L (monthly average), 15 mg/L (weekly average) and 30 mg/L (daily maximum) for both BOD_5 and TSS.

b. Flow. The Facility was designed to provide a tertiary level of treatment for up to a design flow of 0.72 MGD. Therefore, this Order contains an ADWF effluent limit of 0.72 MGD.

c. pH. The secondary treatment regulations at 40 CFR Part 133, also require that pH be maintained between 6.0 and 9.0 standard units. In a letter dated

3 February 2009, the Discharger requested an upper effluent pH limitation of 8.0 which reflects the Facility's actual process limit. Data collected since the new treatment facility went into operation indicate that the Discharger can comply with this limitation. Therefore, at the request of the Discharger, this Order established a more stringent upper pH limitation of 8.0.

Summary of Technology-based Effluent Limitations
Discharge Point No. 001

Table F-4. Summary of Technology-based Effluent Limitations

Parameter	Units	Effluent Limitations			
		Monthly Average	Weekly Average	Daily Maximum	Daily Average
Average Dry Weather Flow	MGD	--	--		0.72
Biochemical Oxygen Demand (5-day @ 20°C)	mg/L	10	15	30	--
	lbs/day[1]	60	90	180	--
Total Suspended Solids	mg/L	10	15	30	--
	lbs/day[1]	60	90	180	--

[1] Based upon an average dry weather flow of 0.72 MGD.

Percent Removal: The average monthly percent removal of BOD_5 and TSS shall not be less than 85 percent.

C. Water Quality-Based Effluent Limitations (WQBELs)

1. Scope and Authority

Section 301(b) of the CWA and 40 CFR 122.44(d) require that permits include limitations more stringent than applicable federal technology-based requirements where necessary to achieve applicable water quality standards.

40 CFR 122.44(d)(1)(i) mandates that permits include effluent limitations for all pollutants that are or may be discharged at levels that have the reasonable potential to cause or contribute to an exceedance of a water quality standard, including numeric and narrative objectives within a standard. Where reasonable potential has been established for a pollutant, but there is no numeric criterion or objective for the pollutant, WQBELs must be established using: (1) USEPA criteria guidance under CWA section 304(a), supplemented where necessary by other relevant information; (2) an indicator parameter for the pollutant of concern; or (3) a calculated numeric water quality criterion, such as a proposed state criterion or policy interpreting the state's narrative criterion, supplemented with other relevant information, as provided in 40 CFR 122.44(d)(1)(vi).

The process for determining reasonable potential and calculating WQBELs when necessary is intended to protect the designated uses of the receiving water as specified in the Basin Plan, and achieve applicable water quality objectives and

criteria that are contained in other state plans and policies, or any applicable water quality criteria contained in the CTR and NTR.

2. Applicable Beneficial Uses and Water Quality Criteria and Objectives

The Basin Plan designates beneficial uses, establishes water quality objectives, and contains implementation programs and policies to achieve those objectives for all waters addressed through the plan. In addition, the Basin Plan implements State Water Board Resolution No. 88-63, which established state policy that all waters, with certain exceptions, should be considered suitable or potentially suitable for municipal or domestic supply.

The federal CWA section 101(a)(2), states: "*it is the national goal that wherever attainable, an interim goal of water quality which provides for the protection and propagation of fish, shellfish, and wildlife, and for recreation in and on the water be achieved by July 1, 1983.*" Federal Regulations, developed to implement the requirements of the CWA, create a rebuttable presumption that all waters be designated as fishable and swimmable. Federal Regulations, 40 CFR sections 131.2 and 131.10, require that all waters of the State regulated to protect the beneficial uses of public water supply, protection and propagation of fish, shell fish and wildlife, recreation in and on the water, agricultural, industrial and other purposes including navigation. Section 131.3(e), 40 CFR, defines existing beneficial uses as those uses actually attained after 28 November 1975, whether or not they are included in the water quality standards. Federal Regulation, 40 CFR section 131.10 requires that uses be obtained by implementing effluent limitations, requires that all downstream uses be protected and states that in no case shall a state adopt waste transport or waste assimilation as a beneficial use for any waters of the United States.

a. **Receiving Water.** Magnolia Creek is a tributary to Bear River within the Bear River Hydrologic Unit, Upper Bear HA, and Lake Combie HSA. Refer to Section II.H for beneficial uses.

b. **Hardness.** While no effluent limitation for hardness is necessary in this Order, hardness is critical to the assessment of the need for, and the development of, effluent limitations for certain metals. The *California Toxics Rule and the National Toxics Rule*, contain water quality criteria for seven metals that vary as a function of hardness, the lower the hardness the lower the water quality criteria. The hardness-dependent metals include cadmium, copper, chromium III, lead, nickel, silver, and zinc. The equation describing the general formulation of the criteria is as follows

$$\text{CTR Criterion (expressed as dissolved)} = \text{WER} \times \text{CF} \times e^{m[\ln(H)]+b} \quad \text{(Equation 1)}$$

Where:

WER = water-effect ratio (default of 1.0 used in this Order)

CF = total to dissolved conversion factor

m = criterion-specific constant

H = Hardness

b = criterion-specific constant

The constants “m” and “b” are specific to both the metal under consideration, and the type of criterion (i.e. acute or chronic)

Effluent limitations for the discharge must be set to protect the beneficial uses of the receiving water for all discharge conditions. In the absence of the option of including condition-dependent, “floating” effluent limitations that are reflective of actual conditions at the time of discharge, effluent limitations must be set using a reasonable worst-case condition in order to protect beneficial uses for all discharge conditions. Recent studies indicate that using the receiving water lowest hardness for establishing water quality criteria is not the most protective for the receiving water. The Regional Water Board has evaluated these studies and concurs that for some parameters the beneficial uses of the receiving water are best protected using the lowest hardness value of the effluent, while for some parameters, the use of both the lowest hardness value of the receiving water and the lowest hardness value of the effluent is the most protective, provided sufficient hardness data for the effluent and receiving water are available.

Because of the non-linearity of the Criterion equation, the relationship can be either concave downward or concave upward depending on the criterion-specific constants. For those contaminants whereby the regulatory criteria exhibit a concave downward relationship as a function of hardness (e.g. acute and chronic copper, chromium III, nickel, and zinc, and chronic cadmium), use of the lowest recorded effluent hardness for establishment of water quality objectives is fully protective of all beneficial uses regardless of whether the effluent or receiving water hardness is higher. For purposes of establishing WQBELs, water quality criteria for acute and chronic copper, acute and chronic chromium III, acute and chronic nickel, acute and chronic zinc, and chronic cadmium were developed using the lowest effluent hardness value 55 mg/L. Water quality criteria for acute cadmium, acute and chronic lead, and acute silver were developed using the lowest receiving water hardness value 78 mg/L.

c. **Assimilative Capacity/Mixing Zone.** Based on the available information, the worst-case dilution is assumed to be zero to provide protection for the receiving water beneficial uses. The impact of assuming zero dilution/assimilative capacity within the receiving water is that the discharge limitations are end-of-pipe limits with no allowance for dilution within the receiving water.

3. Determining the Need for WQBELs

a. The Regional Water Board conducted the RPA in accordance with Section 1.3 of the SIP. Although the SIP applies directly to the control of CTR priority

pollutants, the State Water Board has held that the Regional Water Board may use the SIP as guidance for water quality-based toxics control.[1] The SIP states in the introduction "*The goal of this Policy is to establish a standardized approach for permitting discharges of toxic pollutants to non-ocean surface waters in a manner that promotes statewide consistency."* Therefore, in this Order the RPA procedures from the SIP were used to evaluate reasonable potential for both CTR and non-CTR constituents.

b. **Constituents with No Reasonable Potential.** WQBELs are not included in this Order for constituents that do not demonstrate reasonable potential; however, monitoring for those pollutants is established in this Order as required by the SIP. If the results of effluent monitoring demonstrate reasonable potential, this Order may be reopened and modified by adding an appropriate effluent limitation.

c. **Constituents with Reasonable Potential.** The Regional Water Board finds that the discharge has a reasonable potential to cause or contribute to an in-stream excursion above a water quality standard for ammonia, nitrate, and nitrite. WQBELs for this constituent are included in this Order

d. WQBELs were calculated in accordance with section 1.4 of the SIP, as described in Attachment F, Section IV.C.4.

e. **Aluminum***.* USEPA developed National Recommended Ambient Water Quality Criteria for protection of freshwater aquatic life for aluminum. The recommended 4-day average (chronic) and 1-hour average (acute) criteria for aluminum are 87 µg/L and 750 µg/L, respectively, for waters with a pH of 6.5 to 9.0. USEPA recommends that the ambient criteria are protective of the aquatic beneficial uses of receiving waters in lieu of site-specific criteria. The USEPA criteria are based on studies with waters in a pH range of 6.5-6.8 and low hardness (<10 mg/L as $CaCO_3$). Based on the minimum hardness measured in the effluent of 55 mg/L and the minimum pH measured in the effluent of 6.6, and no receiving water dilution, it is appropriate to establish the aluminum effluent limitation using the chronic criterion. The previous Order No. R5-2002-0095 contained 87 µg/L as a 4-day average and 750 µg/L as a 1-hour average as effluent limitations.

   The maximum effluent concentration (MEC) for aluminum was 1,820 µg/L, based on 24 samples collected between 1 September 2005 and 31 August 2007 during the operation of the old treatment system where alum was added as a coagulant prior to filtration. There is no receiving water concentration available. After the new treatment system went on line alum was no longer used as a coagulant. The MEC for aluminum was 25.5 µg/L, based on 36 samples collected between July 2008 and December 2008. The alum appears to have been the primary source of aluminum in the effluent. Therefore, aluminum in the discharge from the new treatment system no longer has reasonable potential to cause or contribute to an in-stream excursion above a level necessary to protect aquatic life resulting in a violation of the Basin Plan's narrative toxicity objective.

1 See, Order WQO 2001-16 (Napa) and Order WQO 2004-0013 (Yuba City)

Therefore, based on operation of a new treatment system and new monitoring information, this Order does not contain an effluent limitation for aluminum. This action is consistent with the antibacksliding provisions (See Section IV.D.3). Quarterly monitoring is included in this Order for aluminum for the first 3 years after permit adoption. Should monitoring results indicate that the discharge has the reasonable potential to cause or contribute to an exceedance of a water quality standard, this Order may be reopened and modified by adding an appropriate effluent limitation.

f. **Ammonia.** Untreated domestic wastewater contains ammonia. Nitrification is a biological process that converts ammonia to nitrite and nitrite to nitrate. Denitrification is a process that converts nitrate to nitrite or nitric oxide and then to nitrous oxide or nitrogen gas, which is then released to the atmosphere. The Discharger currently uses nitrification to remove ammonia from the waste stream. Inadequate or incomplete nitrification may result in the discharge of ammonia to the receiving stream. Ammonia is known to cause toxicity to aquatic organisms in surface waters. Discharges of ammonia would violate the Basin Plan narrative toxicity objective. Applying 40 CFR section 122.44(d)(1)(vi)(B), it is appropriate to use USEPA's Ambient National Water Quality Criteria for the Protection of Freshwater Aquatic Life for ammonia, which was developed to be protective of aquatic organisms.

USEPA's *Ambient Water Quality Criteria for the Protection of Freshwater Aquatic Life*, for total ammonia, recommends acute (1-hour average; criteria maximum concentration or CMC) standards based on pH and chronic (30-day average, criteria continuous concentration or CCC) standards based on pH and temperature. USEPA also recommends that no 4-day average concentration should exceed 2.5 times the 30-day CCC. USEPA found that as pH increased, both the acute and chronic toxicity of ammonia increased. Salmonids were more sensitive to acute toxicity effects than other species. However, while the acute toxicity of ammonia was not influenced by temperature, it was found that invertebrates and young fish experienced increasing chronic toxicity effects with increasing temperature. Because Magnolia Creek has a beneficial use of cold freshwater habitat and the presence of salmonids and early fish life stages in Magnolia Creek are well documented, the recommended criteria for waters where salmonids and early life stages are present were used.

The previous Order contained "floating" effluent limitations for ammonia. This Order contains effluent limitations for ammonia to assure the treatment process adequately nitrifies the waste stream to protect the aquatic life beneficial uses. Effluent limitations for ammonia in this Order are fixed year-round limitations that are based on reasonable worst-case conditions.

The maximum permitted effluent pH is 8.5. However, the Discharger requested the maximum pH in the effluent be restricted to 8.0. The Discharger's request is more restrictive than the Basin Plan objective for pH. In order to protect against

the worst-case short-term exposure of an organism, a pH value of 8.0 was used to derive the acute criterion. The resulting acute criterion is 5.62 mg/L.

Because Magnolia Creek is sometimes dominated by the effluent, effluent temperature and pH data from the Discharger's monthly monitoring reports from September 2002 through August 2007 were used to develop the chronic criteria that provide for a representative analysis consistent with USEPA ammonia guidance criteria. This time period is larger than that used for other constituents because temporary discharge limitations prior to upgrading to tertiary treatment limited the number of data points collected from September 2005 through August 2007 period. The CCC for ammonia varies with pH and temperature. Using effluent data from 1 September 2002 through August 2007, the CCC was calculated for each day when temperatures and pH were measured. Intermittent discharge made calculations of a 30-day average CCC impracticable at times. Thus, the lowest 99.9% single day CCC of 4.10 mg N/L, was conservatively used to represent the lowest 99.9% 30-day average CCC for this particular discharger. The USEPA recommended maximum 4-day average concentration is 2.5 times the 30-day average CCC or 10.3 mg N/L as a 4-day average.

The maximum permitted effluent limitations for ammonia are 2.5 mg/L (as N) for the average monthly effluent limitation (AMEL) and 5.6 mg/L (as N) for the daily maximum effluent limitation (MDEL). (See section IV.C.4, Table F-6, of the Fact Sheet for calculations of the AMEL and MDEL for ammonia.) Effluent limitations for ammonia are included in this Order to assure the treatment process adequately nitrifies the waste stream to protect the aquatic habitat beneficial uses.

The MEC for ammonia was 25.4 mg/L, based on 46 samples collected between 1 September 2005 and 31 August 2007, during the operation of the old treatment system. There is no receiving water concentration available. The MEC for ammonia was 1.30 mg/L based on 55 samples after the new treatment system went into operation. The maximum monthly average since the new treatment facility went into operation was 0.50 mg/L, based on 55 samples collected between June 2008 and December 2008. Based on the sample results after the new treatment system became operational, it appears that the Discharger will be in compliance with effluent limitations upon issuance of the permit.

g. **Chlorine Residual.** The previous Order No. R5-2002-0095 contained effluent limitations for chlorine residual. The Discharger has eliminated the use of chlorine for disinfection and sulfur dioxide for dechlorination. The new treatment system uses UV for disinfection. Therefore, based on operation of a new treatment system that no longer uses chlorine for disinfection, this Order does not contain an effluent limitation for chlorine. This action is consistent with the antibacksliding provisions (see Section IV.D.3).

The Discharger may continue to use chlorine for cleaning the MBR membranes. This Order contains a prohibition for discharge of wastewater to surface waters that contains chlorine. The Discharger intends to monitor chlorine residual during

maintenance operations and divert wastewater containing chlorine to the emergency storage pond.

h. **Copper.** The CTR includes hardness-dependent criteria for the protection of freshwater aquatic life for copper. The criteria for copper are presented in dissolved concentrations. USEPA recommends conversion factors to translate dissolved concentrations to total concentrations. The USEPA default conversion factors for copper in freshwater are 0.96 for both the acute and the chronic criteria. Using the worst-case measured hardness from the effluent (55 mg/L as $CaCO_3$) and the USEPA recommended dissolved-to-total translator, the applicable chronic criterion (maximum 4-day average concentration) is 5.60 µg/L and the applicable acute criterion (maximum 1-hour average concentration) is 7.97 µg/L, as total recoverable.

   The MEC for total copper was 9.4 µg/L, based on six samples collected between 20 May 2003 and 21 June 2005 during operation of the old treatment system. There is no receiving water concentration available. After the new treatment facility came on line, the MEC for copper was 2.9 mg/L based on seven samples collected from June 2008 to October 2008. Therefore, based on the new data the discharge no longer has reasonable potential to cause or contribute to an in-stream excursion above the CTR criteria for copper. Based on the new monitoring data, no effluent limits are included in this Order. Quarterly monitoring has been established for copper for the first 3 years after permit adoption to gather additional information to determine if copper exceeds the criterion. Should monitoring results indicate that the discharge has the reasonable potential to cause or contribute to an exceedance of a water quality standard, this Order may be reopened and modified by adding an appropriate effluent limitation.

i. **Cyanide.** The CTR includes maximum 1-hour average and 4-day average cyanide concentrations of 22 µg/L and 5.2 µg/L, respectively, for the protection of freshwater aquatic life. The MEC for cyanide was 12 µg/L, based on five samples collected between 20 May 2003 and 21 June 2005. There is no receiving water concentration available. After the new treatment facility came on line, cyanide is no longer detected in the effluent at a detection limit of 2 µg/L, based on seven samples collected from June 2008 to October 2008. Therefore, based on the new data it appears the discharge no longer has reasonable potential to cause or contribute to an in-stream excursion above the CTR criteria for cyanide. No effluent limits are included in this Order. Quarterly monitoring has been established for cyanide for the first 3 years after permit adoption to gather additional information to determine if cyanide is present in the effluent. Should monitoring results indicate that the discharge has the reasonable potential to cause or contribute to an exceedance of a water quality standard, this Order may be reopened and modified by adding an appropriate effluent limitation.

j. **Dichlorobromomethane.** The CTR includes a dichlorobromomethane criterion of 0.56 µg/L for the protection of human health and is based on a one-in-a-million cancer risk for waters from which both water and organisms are consumed. The MEC for dichlorobromomethane was 0.8 µg/L, based on six samples collected between 20 May 2003 and 21 June 2005 during operation of the treatment system with chlorine disinfection. The Discharger has replaced the chlorine disinfection system with an ultraviolet light disinfection system and dichlorobromomethane is no longer detected in the effluent discharge based on seven samples collected from June 2008 to October 2008 at a detection limit of 0.1 µg/L. Therefore, based on the new data it appears the discharge no longer has reasonable potential to cause or contribute to an in-stream excursion above the CTR criteria for dichlorobromomethane. No effluent limits are included in this Order and this Order no longer requires monitoring for dichlorobromomethane.

k. **Electrical Conductivity. (see Subsection r. Salinity)**

l. **Iron.** The Secondary MCL - Consumer Acceptance Limit for iron is 300 µg/L. The MEC for iron was 585 µg/L, based on six samples collected between 20 May 2003 and 21 June 2005. There is no receiving water concentration available. After the new treatment facility came on line, the MEC for iron was 29 mg/L based on seven samples collected from June 2008 to October 2008. Therefore, based on the new data the discharge no longer has reasonable potential to cause or contribute to an in-stream excursion above the Secondary MCL for iron. No effluent limits are included in this Order. Quarterly monitoring has been established for iron for the first 3 years after permit adoption to gather additional information to determine if iron is present in the effluent at concentrations exceeding the criterion. Should monitoring results indicate that the discharge has the reasonable potential to cause or contribute to an exceedance of a water quality standard, this Order may be reopened and modified by adding an appropriate effluent limitation.

m. **Manganese.** The Secondary MCL - Consumer Acceptance Limit for manganese is 50 µg/L. The MEC for manganese was 160 µg/L, based on six samples collected between 20 May 2003 and 21 June 2005. There is no receiving water concentration available. After the new treatment facility came on line, the MEC for manganese was 16.8 mg/L based on seven samples collected from June 2008 to October 2008. Therefore, based on the new data the discharge no longer has reasonable potential to cause or contribute to an in-stream excursion above the Secondary MCL for manganese. No effluent limits are included in this Order. Quarterly monitoring has been established for manganese for the first 3 years after permit adoption to gather additional information to determine if manganese is present in the effluent at concentrations exceeding the criterion. Should monitoring results indicate that the discharge has the reasonable potential to cause or contribute to an exceedance of a water quality standard, this Order may be reopened and modified by adding an appropriate effluent limitation.

n. **Nitrite and Nitrate.** Untreated domestic wastewater contains ammonia. Nitrification is a biological process that converts ammonia to nitrite and nitrite to nitrate. Denitrification is a process that converts nitrate to nitrite or nitric oxide and then to nitrous oxide or nitrogen gas, which is then released to the atmosphere. Nitrate and nitrite are known to cause adverse health effects in humans. The California Department of Public Health (DPH; formerly the Department of Health Services) has adopted Primary MCLs for the protection of human health for nitrite and nitrate that are equal to 1 mg/L and 10 mg/L (measured as nitrogen), respectively. DPH has also adopted a primary MCL of 10,000 µg/L for the sum of nitrate and nitrite, measured as nitrogen.

USEPA has developed a primary MCL and an MCL goal of 1,000 µg/L for nitrite (as nitrogen). For nitrate, USEPA has developed Drinking Water Standards (10,000 µg/L as Primary MCL) and National Ambient Water Quality Criteria for protection of human health (10,000 µg/L for non-cancer health effects). Recent toxicity studies have indicated a possibility that nitrate is toxic to aquatic organisms.

Inadequate or incomplete denitrification may result in the discharge of nitrate and/or nitrite to the receiving stream. The conversion of ammonia to nitrites and the conversion of nitrites to nitrates present a reasonable potential for the discharge to cause or contribute to an in-stream excursion above the Primary MCLs for nitrite and nitrate. AMELs for nitrite and nitrite plus nitrate of 1 mg/L and 10 mg/L, respectively, are included in this Order based on the MCLs. These effluent limitations are included in this Order to assure the treatment process adequately nitrifies and denitrifies the waste stream to protect the beneficial use of municipal and domestic supply.

The highest monthly average for nitrate was 2.31 mg/L and the highest monthly average for nitrite was 0.79 mg/L, based on 29 samples collected between June 2008 and December 2008 after the new treatment system went into operation. Based on the sample results after the new treatment system became operational, it appears that the Discharger will be in compliance with effluent limitations upon issuance of the permit.

o. **Persistent Chlorinated Hydrocarbon Pesticides.** The Basin Plan requires that no individual pesticides shall be present in concentrations that adversely affect beneficial uses; discharges shall not result in pesticide concentrations in bottom sediments or aquatic life that adversely affect beneficial uses; persistent chlorinated hydrocarbon pesticides shall not be present in the water column at detectable concentrations; and pesticide concentrations shall not exceed those allowable by applicable antidegradation policies. Persistent chlorinated hydrocarbon pesticides include aldrin; alpha-BHC; beta-BHC; gamma-BHC; delta-BHC; chlordane; 4,4-DDT; 4,4-DDE; 4,4-DDD; dieldrin; alpha-endosulfan; beta-endosulfan; endosulfan sulfate; endrin; endrin aldehyde; heptachlor; heptachlor epoxide; and toxaphene.

Alpha-BHC (alpha-hexachlorocyclohexane), aldrin, and dieldrin were detected in the effluent at a concentration of 0.014 µg/L, 0.009 µg/L, and 0.006 µg/L, respectively, in samples collected prior to 2008. However in seven samples collected from June 2008 to October 2008, after the new treatment facility became operational, alpha-BHC and aldrin were not detected at the minimum acceptable reporting level as indicated in Appendix 4 of the SIP. Dieldrin was also detected but not quantified at a detection limit of 0.007 µg/L in one of the seven samples collected since the new treatment facility became operational. Dieldrin is not expected to be present in the wastewater from a residential service. Effluent limits are not included in this Order for alpha-BHC, aldrin, and dieldrin. Annual monitoring is included in this Order for alpha-BHC, aldrin, and dieldrin. Should monitoring results indicate that the discharge has the reasonable potential to cause or contribute to an exceedance of a water quality standard, this Order may be reopened and modified by adding an appropriate effluent limitation.

p. **Pathogens**. The Regional Water Board, when developing NPDES permits, implements recommendations by DPH for the appropriate disinfection requirements for the protection of MUN, REC-1 and AGR. The disinfection requirements in the proposed Order implement the DPH recommendations and are fully protective of the beneficial uses of the receiving water.

DPH has developed reclamation criteria, CCR, Division 4, Chapter 3 (Title 22), for the reuse of wastewater. Title 22 requires that for spray irrigation of food crops, parks, playgrounds, schoolyards, and other areas of similar public access, wastewater be adequately disinfected, oxidized, coagulated, clarified, and filtered, and that the effluent total coliform levels not exceed 2.2 MPN/100 mL as a 7-day median. As coliform organisms are living and mobile, it is impracticable to quantify an exact number of coliform organisms and to establish weekly average limitations. Instead, coliform organisms are measured as a most probable number and regulated based on a 7-day median limitation. The measure of coliform organisms is utilized as an indicator of the effectiveness of the entire treatment train and the effectiveness of removing other pathogens.

Title 22 also requires that recycled water used as a source of water supply for non-restricted recreational impoundments be disinfected tertiary recycled water that has been subjected to conventional treatment. A non-restricted recreational impoundment is defined as "*…an impoundment of recycled water, in which no limitations are imposed on body-contact water recreational activities.*" Title 22 is not directly applicable to surface waters; however, the Regional Water Board finds that it is appropriate to apply an equivalent level of treatment to that required by DPH's for reclamation criteria because the receiving water is used for irrigation of agricultural land and for contact recreation purposes. The stringent disinfection criteria of Title 22 are appropriate since the undiluted effluent may be used for the irrigation of food crops and/or for body-contact water recreation.

In site-specific situations where a discharge is occurring to a stream with a downstream water intake used as a domestic water supply without treatment, the

DPH has recommended the same Title 22 tertiary treatment requirements for the protection of MUN, as well as protecting REC-1 and AGR. DPH also recommended a 20:1 dilution ratio in addition to the Title 22 tertiary treatment requirement where there are existing domestic water users of raw water near the treatment plant outfall. In this case, there are no such known uses that could be affected by the discharge, so tertiary treatment plus 20:1 dilution is not necessary to protect the MUN, REC-1, or AGR uses.

The chemical constituents narrative objective states, "*Waters shall not contain chemical constituents in concentrations that adversely affect beneficial uses*." The narrative toxicity objective states, "*All waters shall be maintained free of toxic substances in concentrations that produce detrimental physiological responses in human, plant, animal, or aquatic life*." When necessary, the Regional Water Board adopts numeric effluent limitations to implement these objectives on a case-by-case basis implementing relevant numerical criteria and guidelines developed and/or published by other agencies and organizations (e.g., State Water Board, DPH, California Office of Environmental Health Hazard Assessment, California Department of Toxic Substances Control, University of California Cooperative Extension, California Department of Fish and Game, USEPA, U.S. Food and Drug Administration, National Academy of Sciences, U.S. Fish and Wildlife Service, Food and Agricultural Organization of the United Nations). In considering such criteria, the Board evaluates whether the specific numerical criteria, which are available through these sources and through other information supplied to the Regional Water Board, are relevant and appropriate to the situation at hand and, therefore, should be used in determining compliance with the narrative objective.

For public water supplies, state and federal law require residual chlorine and/or ultraviolet disinfection of surface water. (*See, e.g.,* Surface Water Treatment Rule, 40 C.F.R. Part 141, Subpart H; Cal. Code of Regulations. Title 22, section 64447.) Treating pathogens to a level more stringent than tertiary treatment requires a chlorine residual in the effluent that is toxic to aquatic life in the receiving water. Pathogens are not bio-accumulative, so discharges at the permitted levels in this Order do not threaten potential uses of the receiving water for untreated domestic use. Therefore, the requirement to implement tertiary treatment only when 20:1 dilution is not available adequately protects beneficial uses and is appropriate for this discharge under the case-by-case approach.

The beneficial uses of the Magnolia Creek include MUN, REC-1, and AGR, and there is, at times, less than 20:1 dilution. To protect these beneficial uses, the Regional Water Board finds that the wastewater must be disinfected and adequately treated to prevent disease. The method of treatment is not prescribed by this Order; however, wastewater must be treated to a level equivalent to that recommended by DPH. In accordance with the requirements of Title 22, this Order includes effluent limitations for total coliform organisms of 2.2 MPN/100 mL as a 7-day median; 23 MPN/100 mL, not to be exceeded more than once in a 30-day period; and 240 MPN/100 mL as an instantaneous

maximum. The Regional Water Board has previously considered the factors in CWC section 13241 in establishing these requirements.

In addition to coliform testing, an operational specification for turbidity has been included as a second indicator of the effectiveness of the treatment process and to assure compliance with the required level of treatment. These operational specifications replace the effluent limitations for turbidity contained in Order No. R5-2002-0095. The tertiary treatment process, or equivalent, is capable of reliably meeting a turbidity limitation of 2 nephelometric turbidity units (NTU) as a daily average. Failure of the filtration system such that virus removal is impaired would normally result in increased particles in the effluent, which result in higher effluent turbidity. Turbidity has a major advantage for monitoring filter performance, allowing immediate detection of filter failure and rapid corrective action. Coliform testing, by comparison, is not conducted continuously and requires several hours, to days, to identify high coliform concentrations. The limitations in the previous Order were solely an operational check to ensure the treatment system was functioning properly and could meet the limits for total coliform organism. The effluent limitations were not intended to regulate turbidity in the receiving water. Therefore, to ensure consistent compliance with the total coliform organism disinfection limitations included in this Order, a turbidity specification is included in this Order as an operational specification prior to disinfection. The operational specification requires that turbidity prior to UV disinfection shall not exceed 2 NTU as a daily average; 5 NTU, more than 5% of the time within a 24-hour period; and an instantaneous maximum of 10 NTU.

q. **pH.** The Basin Plan includes a water quality objective for surface waters (except for Goose Lake) that the "…*pH shall not be depressed below 6.5 nor raised above 8.5. Changes in normal ambient pH levels shall not exceed 0.5 in fresh waters with designated COLD or WARM beneficial uses.*" The Discharger requested the maximum pH in the effluent be restricted to 8.0. Effluent limitations for pH are included in this Order based on the Discharger's request which is more restrictive than the Basin Plan objectives for pH.

r. **Salinity.** There are no USEPA water quality criteria for the protection of aquatic organisms for electrical conductivity, total dissolved solids, sulfate, and chloride. The Basin Plan contains a chemical constituent objective that incorporates State MCLs, contains a narrative objective, and contains numeric water quality objectives for EC, TDS, Sulfate, and Chloride.

Table F-5. Salinity Water Quality Criteria/Objectives

Parameter	Agricultural WQ Goal[1]	Secondary MCL[3]	Effluent	
			Average	Maximum
EC (µmhos/cm)	Varies[2]	900, 1600, 2200	391	554
TDS (mg/L)	Varies	500, 1000, 1500	226	365
Sulfate (mg/L)	Varies	250, 500, 600	36	52
Chloride (mg/L)	Varies	250, 500, 600	36	53

1 Agricultural water quality goals based on *Water Quality for Agriculture*, Food and Agriculture Organization of the United Nations—Irrigation and Drainage Paper No. 29, Rev. 1 (R.S. Ayers and D.W. Westcot, Rome, 1985)

2 The EC level in irrigation water that harms crop production depends on the crop type, soil type, irrigation methods, rainfall, and other factors. An EC level of 700 umhos/cm is generally considered to present no risk of salinity impacts to crops. However, many crops are grown successfully with higher salinities.

3 The secondary MCLs are stated as a recommended level, upper level, and a short-term maximum level.

i. **Chloride**. The secondary MCL for chloride is 250 mg/L, as recommended level, 500 mg/L as an upper level, and 600 mg/L as a short-term maximum. The recommended agricultural water quality goal for chloride, that would apply the narrative chemical constituent objective, is 106 mg/L as a long-term average based on Water Quality for Agriculture, Food and Agriculture Organization of the United Nations—Irrigation and Drainage Paper No. 29, Rev. 1 (R.S. Ayers and D.W. Westcot, Rome, 1985). The 106 mg/L water quality goal is intended to protect against adverse effects on sensitive crops when irrigated via sprinklers.

   Chloride concentrations in the effluent ranged from 28 mg/L to 53 mg/L, with an average of 36 mg/L, for five samples collected by the Discharger from 20 May 2003 and 21 June 2005. The effluent concentrations do not exceed the secondary MCL recommended level of 250 mg/L.

ii. **Electrical Conductivity (EC)**. The secondary MCL for EC is 900 µmhos/cm as a recommended level, 1,600 µmhos/cm as an upper level, and 2,200 µmhos/cm as a short-term maximum. A screening value for the agricultural water quality goal, that would apply the narrative chemical constituents objective, is 700 µmhos/cm as a long-term average based on Water Quality for Agriculture, Food and Agriculture Organization of the United Nations—Irrigation and Drainage Paper No. 29, Rev. 1 (R.S. Ayers and D.W. Westcot, Rome, 1985). The 700 µmhos/cm agricultural water quality screening value would prevent reduction in crop yield, i.e., a restriction on use of water, for salt-sensitive crops, such as beans, carrots, turnips, and strawberries. Most other crops can tolerate higher EC concentrations without harm, however, as the salinity of the irrigation water increases, more crops are potentially harmed by the EC, or extra measures must be taken by the farmer to minimize or eliminate any harmful impacts.

   A review of the Discharger's monitoring reports from 1 June 2002 through 31 August 2007 shows an average effluent EC of 391 µmhos/cm, with a range from 81 µmhos/cm to 554 µmhos/cm for 67 samples. The background receiving water EC averaged 419 µmhos/cm in 71 sampling events collected by the Discharger from 1 June 2002 through 31 August 2007.

iii. **Sulfate**. The secondary MCL for sulfate is 250 mg/L as recommended level, 500 mg/L as an upper level, and 600 mg/L as a short-term maximum. Sulfate concentrations in the effluent ranged from 24 mg/L to 52 mg/L, with an average of 36 mg/L, for five samples collected by the Discharger from 20 May 2003 and 21 June 2005. The effluent does not exceed the secondary MCL recommended level of 250 mg/L.

iv. **Total Dissolved Solids (TDS).** The secondary MCL for TDS is 500 mg/L as a recommended level, 1,000 mg/L as an upper level, and 1,500 mg/L as a short-term maximum. A screening value for the agricultural water quality goal for TDS, that would apply the narrative chemical constituent objective, is 450 mg/L as a long-term average based on Water Quality for Agriculture, Food and Agriculture Organization of the United Nations—Irrigation and Drainage Paper No. 29, Rev. 1 (R.S. Ayers and D.W. Westcot, Rome, 1985). Water Quality for Agriculture evaluates the impacts of salinity levels on crop tolerance and yield reduction, and establishes water quality goals that are protective of the agricultural uses. The 450 mg/L water quality screening value would prevent reduction in crop yield, i.e. a restriction on use of water, for salt-sensitive crops. Only the most salt sensitive crops require irrigation water of 450 mg/L or less to prevent loss of yield. Most other crops can tolerate higher TDS concentrations without harm, however, as the salinity of the irrigation water increases, more crops are potentially harmed by the TDS, or extra measures must be taken by the farmer to minimize or eliminate any harmful impacts.

The average TDS effluent concentration was 226 mg/L with a range from 159 mg/L to 365 mg/L for 19 samples collected by the Discharger from 1 June 2002 through 31 August 2007.

v. **Salinity Effluent Limitations.** Based on the low reported salinity in the effluent, the discharge does not have reasonable potential to cause or contribute to an instream excursion of the conservative screening value for water quality objectives for salinity. However, of additional concern is the salt contribution to Magnolia Creek and the Bear River. No effluent limitations are being established, however, a salinity minimization plan is included in this Order. Also, water supply monitoring is required to evaluate the relative contribution of salinity from the source water to the effluent.

s. **Settleable Solids.** For inland surface waters, the Basin Plan states that "[w]*ater shall not contain substances in concentrations that result in the deposition of material that causes nuisance or adversely affects beneficial uses*." The previous Order contained effluent limitations of 0.1 ml/L as a monthly average and 0.2 ml/L as a daily maximum. Tertiary treatment processes result in solids removal reflective of the design capabilities of the treatment system. Settleable solids for 182 samples after the new treatment system went on line were less than 0.5 ml/L. The TSS limitations of 10 mg/L (monthly average), 15 mg/L (weekly average), and 30 mg/L (daily maximum) include suspended and settleable matter in the analysis and an analysis for settleable matter is no longer necessary. With the TSS limitations in place, the settleable solids limits can be removed as an effluent limitation.

t. **Toxicity.** See Section IV.C.5. of the Fact Sheet regarding whole effluent toxicity.

4. WQBEL Calculations

a. Effluent limitations for ammonia were calculated in accordance with section 1.4 of the SIP. The following paragraphs describe the methodology used for calculating effluent limitations.

b. **Effluent Limitation Calculations.** In calculating maximum effluent limitations, the effluent the ECA is calculated as follows:

$ECA_{acute}=CMC + D(CMC - B)$, and
$ECA_{chronic}=CCC+D(CCC - B)$

For the human health, agriculture, or other long-term criterion/objective, the ECA is calculated as follows:

$ECA_{HH} = HH + D(HH - B)$

where:

ECA_{acute} = effluent concentration allowance for acute (one-hour average) toxicity criterion

$ECA_{chronic}$ = effluent concentration allowance for chronic (four-day average) toxicity criterion

ECA_{HH} = effluent concentration allowance for human health, agriculture, or other long-term criterion/objective

CMC = criteria maximum concentration (one-hour average)

CCC = criteria continuous concentration (four-day average, unless otherwise noted)

HH = human health, agriculture, or other long-term criterion/objective

D = dilution credit

B = maximum receiving water concentration

Acute and chronic toxicity ECAs were then converted to equivalent long-term averages (LTA) using statistical multipliers and the lowest is used. Additional statistical multipliers were then used to calculate the maximum daily effluent limitation (MDEL) and the average monthly effluent limitation (AMEL).

AMELs based on human health criteria are set equal to the human health ECAs and a statistical multiplier is used to calculate the MDEL.

$$AMEL = mult_{AMEL}\left[\min\left(\overbrace{M_A ECA_{acute}}^{LTA_{acute}}, M_C ECA_{chronic}\right)\right]$$

$$MDEL = mult_{MDEL}\left[\min\left(M_A ECA_{acute}, \underbrace{M_C ECA_{chronic}}_{LTA_{chronic}}\right)\right]$$

$$MDEL_{HH} = \left(\frac{mult_{MDEL}}{mult_{AMEL}}\right) AMEL_{HH}$$

where: $mult_{AMEL}$ = statistical multiplier converting minimum LTA to AMEL
$mult_{MDEL}$ = statistical multiplier converting minimum LTA to MDEL
M_A = statistical multiplier converting CMC to LTA
M_C = statistical multiplier converting CCC to LTA

WQBELs were calculated ammonia as follows in Tables F-6.

Table F-6. WQBEL Calculations for Ammonia

	Acute	Chronic (4-day)	Chronic (30-day)
Criteria (mg/L) [1]	5.62	10.26	4.10
Dilution Credit	No Dilution	No Dilution	No Dilution
ECA	5.62	10.26	4.10
ECA Multiplier	0.26	0.46	0.73
LTA	1.49	4.72	3.02
AMEL Multiplier (95th%)	1.70	[2]	[3]
AMEL (mg/L)	**2.5**	[2]	[3]
MDEL Multiplier (99th%)	3.78	[2]	[3]
MDEL (mg/L)	**5.6**	[2]	[3]

[1] USEPA Ambient Water Quality Criteria
[2] Limitations based on acute LTA [Acute LTA < Chronic (4-day) LTA]
[3] Limitations based on acute LTA [Acute LTA < Chronic (30-day) LTA]

Summary of Water Quality-based Effluent Limitations
Discharge Point No. 001

Table F-7. Summary of Water Quality-based Effluent Limitations

Parameter	Units	Effluent Limitations				
		Average Monthly	Average Weekly	Maximum Daily	Instantaneous Minimum	Instantaneous Maximum
Ammonia Nitrogen, Total (as N)	mg/L	2.5	--	5.6	--	--
	lbs/day[1]	15	--	34	--	--
Nitrite + Nitrate Nitrogen, Total (as N)	mg/L	10	--	--	--	--
	lbs/day[1]	60	--	--	--	--
Nitrite Nitrogen, Total (as N)	mg/L	1	--	--	--	--
	lbs/day[1]	6	--	--	--	--
pH	standard units	--	--	--	6.5	8.0

[1] Based on the treatment design flow of 0.72 MGD.

5. Whole Effluent Toxicity (WET)

For compliance with the Basin Plan's narrative toxicity objective, this Order requires the Discharger to conduct whole effluent toxicity testing for acute and chronic toxicity, as specified in the Monitoring and Reporting Program (Attachment E, Section V.). This Order also contains effluent limitations for acute toxicity and requires the Discharger to implement best management practices to investigate the causes of, and identify corrective actions to reduce or eliminate effluent toxicity.

a. **Acute Aquatic Toxicity.** The Basin Plan contains a narrative toxicity objective that states, "*All waters shall be maintained free of toxic substances in concentrations that produce detrimental physiological responses in human, plant, animal, or aquatic life.*" (Basin Plan at III-8.00) The Basin Plan also states that, "…*effluent limits based upon acute biotoxicity tests of effluents will be prescribed where appropriate*…". USEPA Region 9 provided guidance for the development of acute toxicity effluent limitations in the absence of numeric water quality objectives for toxicity in its document titled "Guidance for NPDES Permit Issuance", dated February 1994. In section B.2. "Toxicity Requirements" (pgs. 14-15) it states that, "*In the absence of specific numeric water quality objectives for acute and chronic toxicity, the narrative criterion 'no toxics in toxic amounts' applies. Achievement of the narrative criterion, as applied herein, means that ambient waters shall not demonstrate for acute toxicity: 1) less than 90% survival, 50% of the time, based on the monthly median, or 2) less than 70% survival, 10% of the time, based on any monthly median. For chronic toxicity, ambient waters shall not demonstrate a test result of greater than 1 TUc."* Accordingly, effluent limitations for acute toxicity have been included in this Order as follows:

Acute Toxicity. Survival of aquatic organisms in 96-hour bioassays of undiluted waste shall be no less than:

Minimum for any one bioassays ----------	70%
Median for any three or more consecutive bioassays ---------	90%

b. **Chronic Aquatic Toxicity**. The Basin Plan contains a narrative toxicity objective that states, "All waters shall be maintained free of toxic substances in concentrations that produce detrimental physiological responses in human, plant, animal, or aquatic life." (Basin Plan at III-8.00). Adequate WET data is not available to determine if the discharge has reasonable potential to cause or contribute to an in-stream excursion above of the Basin Plan's narrative toxicity objective. Attachment E of this Order requires semi-annual chronic WET monitoring for demonstration of compliance with the narrative toxicity objective.

In addition to WET monitoring, Special Provisions VI.C.2.a. requires the Discharger to submit to the Regional Water Board an Initial Investigative TRE Work Plan for approval by the Executive Officer, to ensure the Discharger has a plan to immediately move forward with the initial tiers of a TRE, in the event effluent toxicity is encountered in the future. The provision also includes a numeric toxicity monitoring trigger and requirements for accelerated monitoring, as well as, requirements for TRE initiation if a pattern of toxicity is demonstrated.

D. Final Effluent Limitations

1. Mass-based Effluent Limitations.

Title 40 CFR 122.45(f)(1) requires effluent limitations be expressed in terms of mass, with some exceptions, and 40 CFR 122.45(f)(2) allows pollutants that are limited in terms of mass to additionally be limited in terms of other units of measurement. This Order includes effluent limitations expressed in terms of mass and concentration. In addition, pursuant to the exceptions to mass limitations provided in 40 CFR 122.45(f)(1), some effluent limitations are not expressed in terms of mass, such as pH and temperature, and when the applicable standards are expressed in terms of concentration (e.g. CTR criteria and MCLs) and mass limitations are not necessary to protect the beneficial uses of the receiving water. Mass-based effluent limitations were calculated based upon the permitted flow of 0.72 MGD.

2. Averaging Periods for Effluent Limitations.

Title 40 CFR 122.45 (d) requires average weekly and average monthly discharge limitations for publicly owned treatment works (POTWs) unless impracticable. However, for toxic pollutants and pollutant parameters in water quality permitting, the US EPA recommends the use of a maximum daily effluent limitation in lieu of average weekly effluent limitations for two reasons. "*First, the basis for the 7-day average for POTWs derives from the secondary treatment requirements. This basis*

is not related to the need for assuring achievement of water quality standards. Second, a 7-day average, which could comprise up to seven or more daily samples, could average out peak toxic concentrations and therefore the discharge's potential for causing acute toxic effects would be missed." (TSD, pg. 96) This Order utilizes MDELs in lieu of average weekly effluent limitations for ammonia as recommended by the TSD for the achievement of water quality standards and for the protection of the beneficial uses of the receiving stream. DPH recommends that an AMEL is more appropriate for pollutants such as nitrite and nitrite plus nitrate for which the MCL is designed to be protective of acute health effects. Therefore, an AMEL has been applied for nitrite and nitrite plus nitrate. Furthermore, for BOD_5, TSS, pH, and total coliform organisms, weekly average effluent limitations have been replaced or supplemented with effluent limitations utilizing shorter averaging periods. The rationale for using shorter averaging periods for these constituents is discussed in Attachment F, Section IV.C.3., above.

3. Satisfaction of Anti-Backsliding Requirements.

The Clean Water Act specifies that a revised permit may not include effluent limitations that are less stringent than the previous permit unless a less stringent limitation is justified based on exceptions to the anti-backsliding provisions contained in Clean Water Act sections 402(o) or 303(d)(4), or, where applicable, 40 CFR 122.44(*l*).

The previous Order No. R5-2002-0095 contained effluent limitations for turbidity. The prior limitations for turbidity were solely an operational check to ensure the treatment system was functioning properly and could meet the limits for solids and coliform. The prior effluent limitations were not intended to regulate turbidity in the receiving water. Rather, turbidity is an operational parameter to determine proper system functioning and not a WQBEL.

This Order contains performance based operational turbidity specifications to be met prior to disinfection in lieu of effluent limitations. The revised Order does not include effluent limitations for turbidity. However, the performance-based specification in this Order is an equivalent limit that is not less stringent, and therefore does not constitute backsliding.

The revised operational specifications for turbidity are the same as the effluent limitations in Order No. R5-2002-0095, with the inclusion of a more stringent requirement for an instantaneous maximum limit at any time (see Special Provisions VI.C.4.d. Ultraviolet Disinfection (UV) System Operating Specifications). This Order moves the point of compliance from the final effluent after disinfection to an internal compliance point prior to disinfection. These revisions are consistent with state regulations implementing recycled water requirements.

The previous Order No. R5-2002-0095 contained effluent limitations for chlorine residual. The Discharger has eliminated the use of chlorine for disinfection and sulfur dioxide for dechlorination. The new treatment system uses UV for disinfection. Therefore, based on operation of a new treatment system that no

longer uses chlorine for disinfection, this Order does not contain an effluent limitation for chlorine.

The previous Order No. R5-2002-0095 contained settleable solids effluent limitations of 0.1 ml/L as a monthly average and 0.2 ml/L as a daily maximum. Tertiary treatment processes result in solids removal reflective of the design capabilities of the treatment system. The TSS limitations in this Order are more stringent than the limitations in the previous Order and compliance with TSS limitations will result in settleable solids less than the 0.1 ml/L limitation in the previous Order. Settleable solids monitoring data for the discharge has consistently been reported as less than 0.05 ml/L. The Standard Methods analysis for settleable matter cannot reliably measure below 0.1 ml/L. The TSS limitations of 10 mg/L (monthly average), 15 mg/L (weekly average), and 30 mg/L (daily maximum) include suspended and settleable matter in the analysis and an analysis for settleable matter is no longer necessary. These TSS limitations effectively limit settleable solids concentrations to less than the previous settleable solids limitations. With the stringent TSS limitations in place the settleable solids limits can be removed as an effluent limitation.

The revision in the turbidity limitation and the removal of settleable solids is consistent with the antidegradation provisions of 40 CFR 131.12 and State Water Resources Control Board Resolution 68-16 because this Order imposes equivalent or more stringent requirements than the prior permit and therefore does not allow degradation.

The previous Order No. R5-2002-0095 contained effluent limitations for aluminum of 87 µg/L as a 4-day average and 750 µg/L as a 1-hour average. The Discharger has installed a membrane system and has ceased the use of alum, which was the source of the aluminum (see section IV.C.3.e. of this Order). Based on the new method of treatment and new monitoring information the effluent limitations for aluminum have been removed from this Order.

4. Satisfaction of Antidegradation Policy

This Order does not allow for an increase in flow or mass of pollutants to the receiving water. Therefore, a complete antidegradation analysis is not necessary. The Order requires compliance with applicable federal technology-based standards and with WQBELs where the discharge could have the reasonable potential to cause or contribute to an exceedance of water quality standards. The permitted discharge is consistent with the antidegradation provisions of 40 CFR 131.12 and State Water Board Resolution No. 68-16. Compliance with these requirements will result in the use of best practicable treatment or control of the discharge. The impact on existing water quality will be insignificant.

Summary of Final Effluent Limitations
Discharge Point No. 001

Table F-8. Summary of Final Effluent Limitations

Parameter	Units	Effluent Limitations				
		Average Monthly	Average Weekly	Maximum Daily	Instantaneous Minimum	Instantaneous Maximum
Biochemical Oxygen Demand (5-day @ 20°C)	mg/L	10	15	30	--	--
	lbs/day[1]	60	90	180	--	--
Total Suspended Solids	mg/L	10	15	30	--	--
	lbs/day[1]	60	90	180	--	--
Ammonia Nitrogen, Total (as N)	mg/L	2.5	--	5.6	--	--
	lbs/day[1]	15	--	34	--	--
Nitrite + Nitrate Nitrogen, Total (as N)	mg/L	10	--	--	--	--
	lbs/day[1]	60	--	--	--	--
Nitrite Nitrogen, Total (as N)	mg/L	1	--	--	--	--
	lbs/day[1]	6	--	--	--	--
pH	standard units	--	--	--	6.5	8.0

[1] Based on the treatment design flow of 0.72 MGD.

a. **Percent Removal:** The average monthly percent removal of BOD_5 and TSS shall not be less than 85 percent.

b. **Acute Whole Effluent Toxicity.** Survival of aquatic organisms in 96-hour bioassays of undiluted waste shall be no less than:

- 70%, minimum for any one bioassay; and
- 90%, median for any three consecutive bioassays.

c. **Total Coliform Organisms.** Effluent total coliform organisms shall not exceed:

- 2.2 most probable number (MPN) per 100 mL, as a 7-day median; and
- 23 MPN/100 mL, as a daily maximum.

d. **Average Dry Weather Flow.** The average dry weather flow shall not exceed 0.72 MGD.

E. Interim Effluent Limitations – Not Applicable

F. Landscape Discharge Specifications - Not applicable

G. Reclamation Specifications

With the new treatment facilities in place and operational, the previous irrigation pond (PND-001, previously Pond A) and the two previous storage ponds (PND-002 and PND-003, previously Ponds B and C) are no longer an integral part of the treatment process. The Discharger proposes to maintain wildlife habitat and plant site esthetics

by utilizing treated reclaimed wastewater to maintain water levels in Ponds A, B, and C as identified in the Report of Waste Discharge and Environmental Documents. The Discharger plans to add a recycled water supply system to reduce use of potable water for plant use. The Discharger also intends to maintain the irrigation system previously utilized for land disposal to provide for the option of on-site landscape irrigation utilizing reclaimed wastewater.

This Order specifies that wastewater discharged to the reclamation ponds must meet final effluent limitations for discharge to Magnolia Creek that are consistent with DPH reclamation criteria.

V. RATIONALE FOR RECEIVING WATER LIMITATIONS

Basin Plan water quality objectives to protect the beneficial uses of surface water and groundwater include numeric objectives and narrative objectives, including objectives for chemical constituents, toxicity, and tastes and odors. The toxicity objective requires that surface water and groundwater be maintained free of toxic substances in concentrations that produce detrimental physiological responses in humans, plants, animals, or aquatic life. The chemical constituent objective requires that surface water and groundwater shall not contain chemical constituents in concentrations that adversely affect any beneficial use or that exceed the maximum contaminant levels (MCLs) in Title 22, CCR. The tastes and odors objective states that surface water and groundwater shall not contain taste- or odor-producing substances in concentrations that cause nuisance or adversely affect beneficial uses. The Basin Plan requires the application of the most stringent objective necessary to ensure that surface water and groundwater do not contain chemical constituents, toxic substances, radionuclides, or taste and odor producing substances in concentrations that adversely affect domestic drinking water supply, agricultural supply, or any other beneficial use.

A. Surface Water

1. CWA section 303(a-c), requires states to adopt water quality standards, including criteria where they are necessary to protect beneficial uses. The Regional Water Board adopted water quality criteria as water quality objectives in the Basin Plan. The Basin Plan states that "*[t]he numerical and narrative water quality objectives define the least stringent standards that the Regional Board will apply to regional waters in order to protect the beneficial uses*." The Basin Plan includes numeric and narrative water quality objectives for various beneficial uses and water bodies. This Order contains Receiving Surface Water Limitations based on the Basin Plan numerical and narrative water quality objectives for bacteria, biostimulatory substances, chemical constituents, color, dissolved oxygen, floating material, oil and grease, pH, pesticides, radioactivity, salinity, sediment, settleable material, suspended material, tastes and odors, temperature, toxicity, and turbidity.

   Numeric Basin Plan objectives for bacteria, dissolved oxygen, pH, temperature, and turbidity are applicable to this discharge and have been incorporated as Receiving Surface Water Limitations.

B. Groundwater

The beneficial uses of the underlying ground water are municipal and domestic supply, industrial service supply, industrial process supply, and agricultural supply. Basin Plan water quality objectives include narrative objectives for chemical constituents, tastes and odors, and toxicity of groundwater. The toxicity objective requires that groundwater be maintained free of toxic substances in concentrations that produce detrimental physiological responses in humans, plants, animals, or aquatic life. The chemical constituent objective states groundwater shall not contain chemical constituents in concentrations that adversely affect any beneficial use. The tastes and odors objective prohibits taste- or odor-producing substances in concentrations that cause nuisance or adversely affect beneficial uses. The Basin Plan also establishes numerical water quality objectives for chemical constituents and radioactivity in groundwaters designated as municipal supply. These include, at a minimum, compliance with MCLs in Title 22 of the CCR. The bacteria objective prohibits coliform organisms at or above 2.2 MPN/100 ml. The Basin Plan requires the application of the most stringent objective necessary to ensure that waters do not contain chemical constituents, toxic substances, radionuclides, taste- or odor-producing substances, or bacteria in concentrations that adversely affect municipal or domestic supply, agricultural supply, industrial supply or some other beneficial use.

The new treatment facilities are contained in concrete basins and the treatment ponds are no longer utilized for treatment of wastewater. There is no potential from the treatment processes for pollutants to migrate to groundwater in amounts that could degrade groundwater or cause groundwater to exceed applicable water quality objectives. The existing aeration pond will be only be used temporary as an emergency storage pond. The existing irrigation and storage ponds will contain reclaimed wastewater that is consistent with DPH reclamation criteria. This Order contains a limitation prohibiting degradation of groundwater.

VI. RATIONALE FOR MONITORING AND REPORTING REQUIREMENTS

40 CFR 122.48 requires that all NPDES permits specify requirements for recording and reporting monitoring results. Water Code sections 13267 and 13383 authorizes the Regional Water Board to require technical and monitoring reports. The Monitoring and Reporting Program (MRP), Attachment E of this Order, establishes monitoring and reporting requirements to implement federal and state requirements. The following provides the rationale for the monitoring and reporting requirements contained in the Monitoring and Reporting Program for this Facility.

A. Influent Monitoring

1. Influent monitoring is required to collect data on the characteristics of the wastewater and to assess compliance with effluent limitations (*e.g.*, BOD_5 and TSS reduction requirements).

B. Effluent Monitoring

1. Pursuant to the requirements of 40 CFR §122.44(i)(2) effluent monitoring is required for all constituents with effluent limitations. Effluent monitoring is necessary to assess compliance with effluent limitations, assess the effectiveness of the treatment process, and to assess the impacts of the discharge on the receiving stream and groundwater.

2. The SIP states that if "…*all reported detection limits of the pollutant in the effluent are greater than or equal to the C* [water quality criterion or objective] *value, the RWQCB* [Regional Water Board] *shall establish interim requirements…that require additional monitoring for the pollutant….*"

C. Whole Effluent Toxicity Testing Requirements

1. **Acute Toxicity.** Semi-annual 96-hour bioassay testing is required to demonstrate compliance with the effluent limitation for acute toxicity.

2. **Chronic Toxicity.** Semi-annual chronic whole effluent toxicity testing is required in order to demonstrate compliance with the Basin Plan's narrative toxicity objective.

D. Receiving Water Monitoring

1. Surface Water

a. Receiving water monitoring is necessary to assess compliance with receiving water limitations and to assess the impacts of the discharge on the receiving stream.

2. Groundwater

The previous Order No. R5-2002-0095 required the Discharger to conduct a hydrogeologic assessment and a provision requiring installation and sampling of monitoring wells to determine if the discharge from the treatment and storage ponds, and the spray disposal area, impacted groundwater. Based on the data collected from four monitoring wells over a 2-year period, it could not be concluded that groundwater was or was not impacted be water from the treatment and storage ponds and spray disposal area. Without conclusive data documenting impacts or lack thereof, the Discharger opted to abandon the pond system in favor of mechanical treatment. The Discharger has continued quarterly groundwater monitoring of the four wells in accordance with Order No. R5-2002-0095 but has requested a relaxation since the ponds are no longer used for treatment of wastewater.

With the completion of the new treatment facility all treatment processes are contained in concrete basins. The spray disposal area is no longer be used for disposal of wastewater. The existing storage ponds contain reclaimed wastewater, which meets effluent limitations for discharge to surface waters with an effluent

quality consistent with DPH reclamation criteria. The existing storage ponds are constructed on bedrock and are immediately adjacent to Magnolia Creek. Ground water monitoring is no longer necessary and has been removed from this Order. However, the Discharger intends to keep the four onsite groundwater monitoring wells to provide the option for future sampling of groundwater.

E. Other Monitoring Requirements

1. Biosolids Monitoring

Biosolids monitoring is required to ensure compliance with the biosolids disposal requirements (Special Provisions VI.C.6.a.). Biosolids disposal requirements are imposed pursuant to 40 CFR Part 503 to protect public health and prevent groundwater degradation.

2. Ultraviolet Disinfection System Monitoring

UV System specifications and monitoring and reporting are required to ensure that adequate UV dosage is applied to the wastewater to inactivate pathogens (e.g. viruses) in the wastewater. UV Disinfection system monitoring requirements are imposed pursuant to requirements established by the California Department of Public Health, (DPH) and the National Water Research Institute (NWRI) and American Water Works Association Research Foundation NWRI/AWWARF's *"Ultraviolet Disinfection Guidelines for Drinking Water and Water Reuse.*

3. Water Supply Monitoring

Water supply monitoring is required to evaluate the source of constituents in the wastewater.

VII. RATIONALE FOR PROVISIONS

A. Standard Provisions

Standard Provisions, which apply to all NPDES permits in accordance with 40 CFR 122.41, and additional conditions applicable to specified categories of permits in accordance with 40 CFR 122.42, are provided in Attachment D. The discharger must comply with all standard provisions and with those additional conditions that are applicable under 40 CFR 122.42.

40 CFR 122.41(a)(1) and (b) through (n) establish conditions that apply to all State-issued NPDES permits. These conditions must be incorporated into the permits either expressly or by reference. If incorporated by reference, a specific citation to the regulations must be included in the Order. 40 CFR 123.25(a)(12) allows the state to omit or modify conditions to impose more stringent requirements. In accordance with 40 CFR 123.25, this Order omits federal conditions that address enforcement authority

specified in 40 CFR 122.41(j)(5) and (k)(2) because the enforcement authority under the CWC is more stringent. In lieu of these conditions, this Order incorporates by reference CWC section 13387(e).

B. Special Provisions

1. Reopener Provisions

a. This Order may be reopened for modification, or revocation and reissuance, as a result of the detection of a reportable priority pollutant generated by special conditions included in this Order. These special conditions may be, but are not limited to, fish tissue sampling, whole effluent toxicity, monitoring requirements on internal waste stream(s), and monitoring for surrogate parameters. Additional requirements may be included in this Order as a result of the special condition monitoring data.

b. Conditions that necessitate a major modification of a permit are described in 40 CFR 122.62, including:

- If new or amended applicable water quality standards are promulgated or approved pursuant to Section 303 of the CWA, or amendments thereto, this permit may be reopened and modified in accordance with the new or amended standards.

- When new information, that was not available at the time of permit issuance, would have justified different permit conditions at the time of issuance.

c. **Whole Effluent Toxicity.** This Order requires the Discharger to investigate the causes of, and identify corrective actions to reduce or eliminate effluent toxicity through a Toxicity Reduction Evaluation (TRE). This Order may be reopened to include a numeric chronic toxicity limitation, a new acute toxicity limitation, and/or a limitation for a specific toxicant identified in the TRE. Additionally, if a numeric chronic toxicity water quality objective is adopted by the State Water Board, this Order may be reopened to include a numeric chronic toxicity limitation based on that objective.

2. Special Studies and Additional Monitoring Requirements

a. **Chronic Whole Effluent Toxicity Requirements.** The Basin Plan contains a narrative toxicity objective that states, "*All waters shall be maintained free of toxic substances in concentrations that produce detrimental physiological responses in human, plant, animal, or aquatic life*." (Basin Plan at III-8.00.) Adequate WET data is not available to determine if the discharge has reasonable potential to cause or contribute to an in-stream excursion above of the Basin Plan's narrative toxicity objective. Attachment E of this Order requires semi-annual chronic WET monitoring for demonstration of compliance with the narrative toxicity objective.

The Monitoring and Reporting Program of this Order requires chronic WET monitoring for demonstration of compliance with the narrative toxicity objective. In addition to WET monitoring, this provision requires the Discharger to submit to the Regional Water Board an Initial Investigative TRE Workplan for approval by the Executive Officer, to ensure the Discharger has a plan to immediately move forward with the initial tiers of a TRE, in the event effluent toxicity is encountered in the future. The provision also includes a numeric toxicity monitoring trigger, requirements for accelerated monitoring, and requirements for TRE initiation if a pattern of toxicity is demonstrated.

Monitoring Trigger. A numeric toxicity monitoring trigger of > 1 TUc (where TUc = 100/NOEC) is applied in the provision, because this Order does not allow any dilution for the chronic condition. Therefore, a TRE is triggered when the effluent exhibits a pattern of toxicity at 100% effluent.

Accelerated Monitoring. The provision requires accelerated WET testing when a regular WET test result exceeds the monitoring trigger. The purpose of accelerated monitoring is to determine, in an expedient manner, whether there is a pattern of toxicity before requiring the implementation of a TRE. Due to possible seasonality of the toxicity, the accelerated monitoring should be performed in a timely manner, preferably taking no more than 2 to 3 months to complete.

The provision requires accelerated monitoring consisting of four chronic toxicity tests every 2 weeks using the species that exhibited toxicity. Guidance regarding accelerated monitoring and TRE initiation is provided in the *Technical Support Document for Water Quality-based Toxics Control, EPA/505/2-90-001, March 1991* (TSD). The TSD at page 118 states, "*EPA recommends if toxicity is repeatedly or periodically present at levels above effluent limits more than 20 percent of the time, a TRE should be required*." Therefore, four accelerated monitoring tests are required in this provision. If no toxicity is demonstrated in the four accelerated tests, then it demonstrates that toxicity is not present at levels above the monitoring trigger more than 20 percent of the time (only 1 of 5 tests are toxic, including the initial test). However, notwithstanding the accelerated monitoring results, if there is adequate evidence of a pattern of effluent toxicity (i.e. toxicity present exceeding the monitoring trigger more than 20 percent of the time), the Executive Officer may require that the Discharger initiate a TRE.

See the WET Accelerated Monitoring Flow Chart (Figure F-1), below, for further clarification of the accelerated monitoring requirements and for the decision points for determining the need for TRE initiation.

TRE Guidance. The Discharger is required to prepare a TRE Work Plan in accordance with USEPA guidance. Numerous guidance documents are available, as identified below:

- *Toxicity Reduction Evaluation Guidance for Municipal Wastewater Treatment Plants,* (EPA/833B-99/002), August 1999.

- Generalized Methodology for Conducting Industrial TREs*, (EPA/600/2-88/070), April 1989.*

- *Methods for Aquatic Toxicity Identification Evaluations: Phase I Toxicity Characterization Procedures,* Second Edition, EPA 600/6-91/005F, February 1991.

- *Toxicity Identification Evaluation: Characterization of Chronically Toxic Effluents, Phase I*, EPA 600/6-91/005F, May 1992.

- *Methods for Aquatic Toxicity Identification Evaluations: Phase II Toxicity Identification Procedures for Samples Exhibiting acute and Chronic Toxicity,* Second Edition, EPA 600/R-92/080, September 1993.

- *Methods for Aquatic Toxicity Identification Evaluations: Phase III Toxicity Confirmation Procedures for Samples Exhibiting Acute and Chronic Toxicity*, Second Edition, EPA 600/R-92/081, September 1993.

- *Methods for Measuring the Acute Toxicity of Effluents and Receiving Waters to Freshwater and Marine Organisms*, Fifth Edition, EPA-821-R-02-012, October 2002.

- *Short-term Methods for Estimating the Chronic Toxicity of Effluents and Receiving Waters to Freshwater Organisms*, Fourth Edition, EPA-821-R-02-013, October 2002.

- *Technical Support Document for Water Quality-based Toxics Control, EPA/505/2-90-001, March 1991*

Figure F-1
WET Accelerated Monitoring Flow Chart

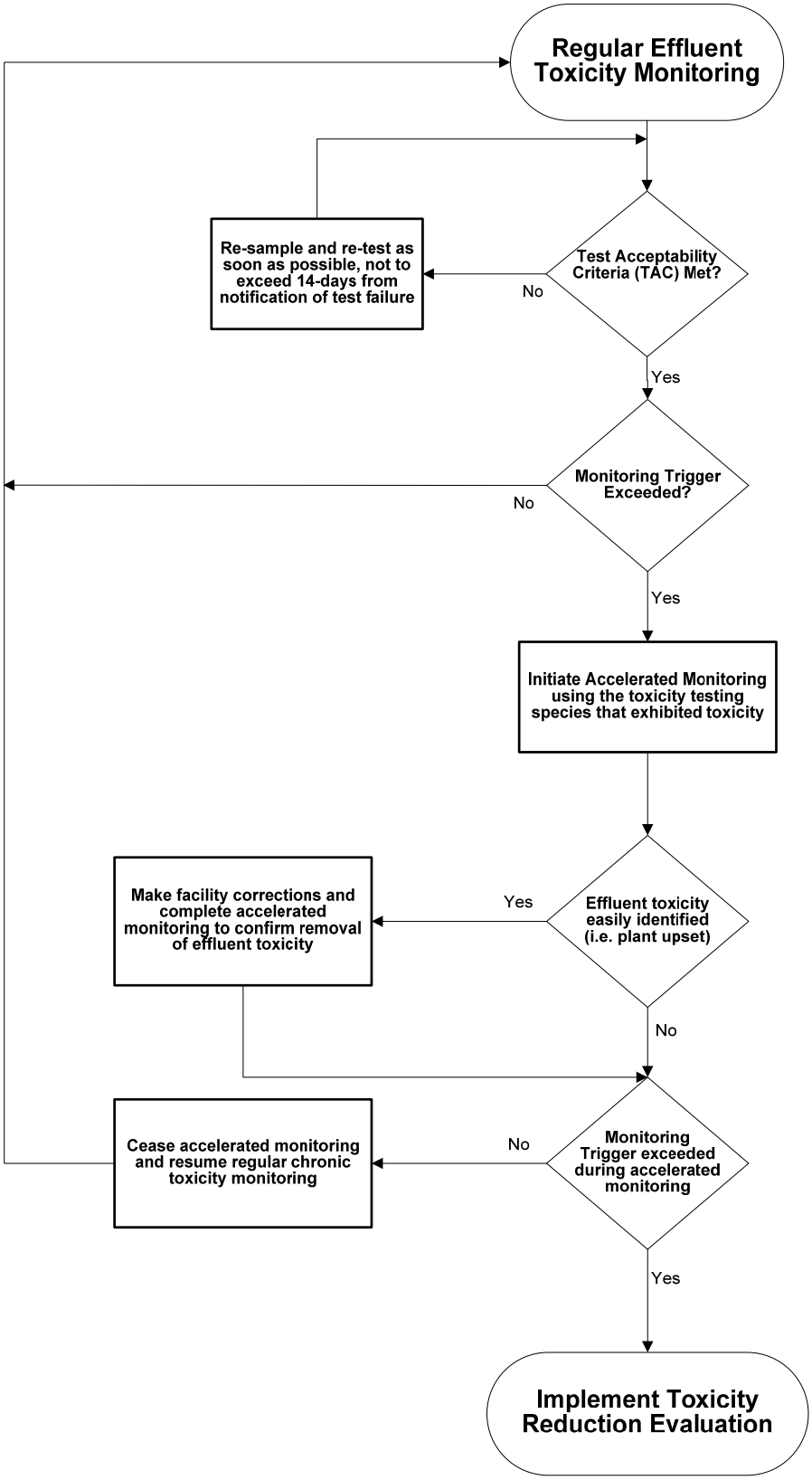

3. Best Management Practices and Pollution Prevention

a. **Salinity Evaluation and Minimization Plan.** In accordance with 40 CFR §122.44(k), the Discharger is required to implement best management practices to reduce the discharge of salinity to the Magnolia Creek. Particularly an Evaluation and Minimization Plan for salinity is required in this Order to ensure adequate measures are developed and implemented by the Discharger.

4. Construction, Operation, and Maintenance Specifications

a. **Ultraviolet Disinfection (UV) System Operating Specifications.** UV System specifications and monitoring and reporting is required when the system becomes operational to ensure that adequate UV dosage is applied to the wastewater to inactivate pathogens e.g. viruses in the wastewater. UV dosage is dependent on several factors such as UV transmittance, UV power setting, wastewater turbidity, and wastewater flow through the UV System. Monitoring and reporting of these parameters is necessary to determine compliance with minimum dosage requirements established by the California Department of Public Health, (DPH) and the National Water Research Institute (NWRI) and American Water Works Association Research Foundation NWRI/AWWARF's *"Ultraviolet Disinfection Guidelines for Drinking Water and Water Reuse"* first published in December 2000 revised as a Second Edition dated May 2003. In addition, a Memorandum dated 1 November 2004 issued by DPH to Regional Water Board executive officers recommended that provisions be included in permits to water recycling treatment plants employing UV disinfection requiring dischargers to establish fixed cleaning frequency of quartz sleeves as well as include provisions that specify minimum delivered UV dose that must be maintained (as recommended by the NWRI/AWWARF UV Disinfection Guidelines).

Turbidity is included as an operational specification as an indicator of the effectiveness of the treatment process and to assure compliance effluent coliform limitations. The tertiary treatment MBR process, utilized at this facility, is capable of reliably meeting a turbidity limitation of 2 NTU as a daily average. Failure of the treatment system such that virus removal is impaired would normally result in increased particles in the effluent, which result in higher effluent turbidity and could impact UV dosage. Turbidity has a major advantage for monitoring filter performance, allowing immediate detection of filter failure and rapid corrective action. The operational specification requires that turbidity prior to disinfection shall not exceed 2 NTU as a daily average; 5 NTU, more than 5% of the time within a 24-hour period; and an instantaneous maximum of 10 NTU.

Minimum UV dosage and turbidity specifications are included as operating criteria in Special Provisions, Section VI.C.5 and Monitoring and Reporting requirements, Attachment E, Section IX.B., to ensure that adequate disinfection of wastewater is achieved.

b. **Reclamation Pond Operating Requirements.** The operation and maintenance specifications for the on site reclamation ponds are necessary to protect the beneficial uses of surface and groundwater. In addition, reporting requirements related to use of the reclamation ponds are required to monitor their use.

5. Special Provisions for Municipal Facilities (POTWs Only)

a. **Pretreatment Requirements.**

i. The federal CWA, section 307(b), and federal regulations, 40 CFR Part 403, require publicly owned treatment works to develop an acceptable industrial pretreatment program. There are no industrial discharges to the treatment facility. This Order continues the provisions from the previous order requiring the Discharger to implement the necessary legal authorities, programs, and controls to insure that incompatible wastes are not introduced to the treatment system. The Discharger is not required to develop a pretreatment program.

b. **Sludge/Biosolids Discharge Specifications.**

The sludge/biosolids provisions are required to ensure compliance with State disposal requirements (Title 27, CCR, Division 2, Subdivision 1, section 20005, et seq) and USEPA sludge/biosolids use and disposal requirements at 40 CFR Part 503.

c. **Collection System.**

The State Water Board issued General Waste Discharge Requirements for Sanitary Sewer Systems, Water Quality Order No. 2006-0003-DWQ (General Order) on 2 May 2006. The General Order requires public agencies that own or operate sanitary sewer systems with greater than one mile of pipes or sewer lines to enroll for coverage under the General Order. The General Order requires agencies to develop sanitary sewer management plans (SSMPs) and report all sanitary sewer overflows (SSOs), among other requirements and prohibitions.

Furthermore, the General Order contains requirements for operation and maintenance of collection systems and for reporting and mitigating sanitary sewer overflows. Inasmuch that the Discharger's collection system is part of the system that is subject to this Order, certain standard provisions are applicable as specified in Provisions, section VI.C.5. For instance, the 24-hour reporting requirements in this Order are not included in the General Order. The Discharger must comply with both the General Order and this Order. The Discharger and public agencies that are discharging wastewater into the facility were required to obtain enrollment for regulation under the General Order by 1 December 2006.

6. Other Special Provisions

Ownership Change. To maintain the accountability of the operation of the Facility, the Discharger is required to notify the succeeding owner or operator of the existence of this Order by letter if, and when, there is any change in control or ownership of land or waste discharge facilities presently owned or controlled by the Discharger.

7. Compliance Schedules – Not Applicable

VIII. PUBLIC PARTICIPATION

The Regional Water Board is considering the issuance of WDRs that will serve as a NPDES permit for Lake of the Pines WWTP. As a step in the WDR adoption process, the Regional Water Board staff has developed tentative WDRs. The Regional Water Board encourages public participation in the WDR adoption process.

A. Notification of Interested Parties

The Regional Water Board has notified the Discharger and interested agencies and persons of its intent to prescribe waste discharge requirements for the discharge and has provided them with an opportunity to submit their written comments and recommendations. Notification was provided through the following <Describe Notification Process (e.g., newspaper name and date)>

B. Written Comments

The staff determinations are tentative. Interested persons are invited to submit written comments concerning these tentative WDRs. Comments must be submitted either in person or by mail to the Executive Office at the Regional Water Board at the address above on the cover page of this Order.

To be fully responded to by staff and considered by the Regional Water Board, written comments should be received at the Regional Water Board offices by 5:00 p.m. on <Date>.

C. Public Hearing

The Regional Water Board will hold a public hearing on the tentative WDRs during its regular Board meeting on the following date and time and at the following location:

Date: <Public Hearing Date>
Time: 8:30 am
Location: Regional Water Quality Control Board, Central Valley Region
11020 Sun Center Dr., Suite #200
Rancho Cordova, CA 95670

Interested persons are invited to attend. At the public hearing, the Regional Water Board will hear testimony, if any, pertinent to the discharge, WDRs, and permit. Oral testimony will be heard; however, for accuracy of the record, important testimony should be in writing.

Please be aware that dates and venues may change. Our Web address is http://www.waterboards.ca.gov/rwqcb5/ where you can access the current agenda for changes in dates and locations.

D. Waste Discharge Requirements Petitions

Any aggrieved person may petition the State Water Board to review the decision of the Regional Water Board regarding the final WDRs. The petition must be submitted within 30 days of the Regional Water Board's action to the following address:

State Water Resources Control Board
Office of Chief Counsel
P.O. Box 100, 1001 I Street
Sacramento, CA 95812-0100

E. Information and Copying

The Report of Waste Discharge (RWD), related documents, tentative effluent limitations and special provisions, comments received, and other information are on file and may be inspected at the address above at any time between 8:30 a.m. and 4:45 p.m., Monday through Friday. Copying of documents may be arranged through the Regional Water Board by calling (916)-464-4620.

F. Register of Interested Persons

Any person interested in being placed on the mailing list for information regarding the WDRs and NPDES permit should contact the Regional Water Board, reference this facility, and provide a name, address, and phone number.

G. Additional Information

Requests for additional information or questions regarding this order should be directed to James C. Pedri at (530) 224-4845.