**CALIFORNIA REGIONAL WATER QUALITY CONTROL BOARD**

**CENTRAL VALLEY REGION**

11020 Sun Center Drive #200, Rancho Cordova, California 95670-6114
Phone (916) 464-3291 • FAX (916) 464-4645
http://www.waterboards.ca.gov/centralvalley

**ORDER NO. R5-2008-XXXX**
**NPDES NO. CA0077895**

# WASTE DISCHARGE REQUIREMENTS FOR THE UNIVERSITY OF CALIFORNIA, DAVIS MAIN WASTEWATER TREATMENT PLANT SOLANO AND YOLO COUNTIES

The following Discharger is subject to waste discharge requirements as set forth in this Order:

**Table 1. Discharger Information**

| | |
|---|---|
| **Discharger** | University of California, Davis |
| **Name of Facility** | University of California, Davis Main Wastewater Treatment Plant |
| **Facility Address** | 1140 Old Davis Road |
| | Davis, California 95616 |
| | Solano and Yolo Counties |
| The U.S. Environmental Protection Agency (USEPA) and the Regional Water Quality Control Board have classified this discharge as a **major** discharge. | |

The discharge by the University of California Davis from the discharge points identified below is subject to waste discharge requirements as set forth in this Order:

**Table 2. Discharge Location**

| Discharge Point | Effluent Description | Discharge Point Latitude | Discharge Point Longitude | Receiving Water |
|---|---|---|---|---|
| 001 | Tertiary treated municipal effluent | 38º, 31', 02.7" N | 121º, 45', 26.7" W | South Fork Putah Creek, tributary to the Sacramento River |
| 002 | Tertiary treated municipal effluent | 38º, 31', 03.3" N | 121º, 45', 50.6" W | North Fork Putah Creek, tributary to the Sacramento River |

**Table 3. Administrative Information**

| | |
|---|---|
| This Order was adopted by the Regional Water Quality Control Board on: | **<Adoption Date>** |
| This Order shall become effective on: | **<Effective Date>** |
| This Order shall expire on: | **<Expiration Date>** |
| The Discharger shall file a Report of Waste Discharge in accordance with title 23, California Code of Regulations, as application for issuance of new waste discharge requirements no later than: | 180 days prior to the Order expiration date |

THEREFORE, IT IS HEREBY ORDERED, that Order No. R5-2003-003, Amendment No. 1 is rescinded upon the effective date of this Order except for enforcement purposes, and, in order to meet the provisions contained in division 7 of the CWC (commencing with section 13000) and regulations adopted thereunder, and the provisions of the federal CWA and regulations and guidelines adopted thereunder, the Discharger shall comply with the requirements in this Order.

I, PAMELA C. CREEDON, Executive Officer, do hereby certify that this Order with all attachments is a full, true, and correct copy of an Order adopted by the California Regional Water Quality Control Board, Central Valley Region, on **<Adoption Date>**.

PAMELA C. CREEDON, Executive Officer

TENTATIVE ORDER

## Table of Contents

I. Facility Information ..... 3
II. Findings ..... 3
III. Discharge Prohibitions ..... 10
IV. Effluent Limitations and Discharge Specifications ..... 10
A. Effluent Limitations – Discharge Point No. 001 and 002 ..... 10
1. Final Effluent Limitations – Discharge Point No. 001 and 002 ..... 10
2. Interim Effluent Limitations ..... 11
B. Land Discharge Specifications – NOT APPLICABLE ..... 12
C. Reclamation Specifications – NOT APPLICABLE ..... 12
V. Receiving Water Limitations ..... 12
A. Surface Water Limitations ..... 12
B. Groundwater Limitations ..... 14
VI. Provisions ..... 14
A. Standard Provisions ..... 14
B. Monitoring and Reporting Program (MRP) Requirements ..... 19
C. Special Provisions ..... 19
1. Reopener Provisions ..... 19
2. Special Studies, Technical Reports and Additional Monitoring Requirements ..... 21
3. Best Management Practices and Pollution Minimization ..... 25
4. Construction, Operation and Maintenance Specifications ..... 25
5. Special Provisions for Municipal Facilities (POTWs Only) ..... 27
6. Other Special Provisions ..... 28
7. Compliance Schedules – Not Applicable ..... 29
VII. Compliance Determination ..... 29

### List of Tables

Table 1. Discharger Information ..... Cover
Table 2. Discharge Location ..... Cover
Table 3. Administrative Information ..... Cover
Table 4. Facility Information ..... 3
Table 5. Basin Plan Beneficial Uses ..... 5
Table 6. Effluent Limitations ..... 10

### List of Attachments

Attachment A – Definitions ..... A-1
Attachment B – Map ..... B-1
Attachment C – Flow Schematic ..... C-1
Attachment D – Standard Provisions ..... D-1
Attachment E – Monitoring and Reporting Program (MRP) ..... E-1
Attachment F – Fact Sheet ..... F-1
Attachment G – Reasonable Potential Analysis ..... G-1
Attachment H - Constituents to be Monitored ..... H-1

TENTATIVE ORDER

## I. FACILITY INFORMATION

The following Discharger is subject to waste discharge requirements as set forth in this Order:

**Table 4. Facility Information**

| | |
|---|---|
| **Discharger** | University of California Davis |
| **Name of Facility** | University of California Davis Main Wastewater Treatment Plant |
| **Facility Address** | 1140 Old Davis Road |
| | Davis, California 95616 |
| | Solano and Yolo Counties |
| **Facility Contact, Title, and Phone** | Michael Fan, Senior Engineer, (530) 752-7553 |
| **Mailing Address** | Facilities Management: Utilities - WWTP<br>One Shields Avenue, Davis, California 95616 |
| **Type of Facility** | Publicly Owned Treatment Works |
| **Facility Design Flow** | 3.6 million gallons per day (mgd) Average Dry Weather Flow (ADWF) |

## II. FINDINGS

The California Regional Water Quality Control Board, Central Valley Region (hereinafter Regional Water Board), finds:

**A. Background.** University of California Davis (hereinafter Discharger) is currently discharging pursuant to Order No. R5-2003-0003 Amendment No. 1 and National Pollutant Discharge Elimination System (NPDES) Permit No. CA0077895. The Discharger submitted a Report of Waste Discharge, dated 29 June 2007**,** and applied for a NPDES permit renewal to discharge up to 3.6 million gallons per day of tertiary treated wastewater from University of California Davis Main Wastewater Treatment Plant (WWTP)**,** hereinafter Facility.

For the purposes of this Order, references to the “discharger” or “permittee” in applicable federal and state laws, regulations, plans, or policy are held to be equivalent to references to the Discharger herein.

**B. Facility Description.** The Discharger owns and operates a publicly owned wastewater treatment plant. The treatment system consists of a communitor, mechanical bar screen, oxidation ditch activated sludge process, secondary clarifiers, filtration, and ultraviolet light disinfection. Wastewater is discharged from Discharge Points 001 and 002 (see table on cover page) to the North Fork and South Fork of Putah Creek, both waters of the United States, and tributary to the Sacramento River within the Putah Creek Watershed. Attachment B provides a map of the area around the Facility. Attachment C provides a flow schematic of the Facility.

TENTATIVE ORDER

**C. Legal Authorities.** This Order is issued pursuant to section 402 of the Clean Water Act (CWA) and implementing regulations adopted by the USEPA and chapter 5.5, division 7 of the California Water Code (commencing with section 13370). It shall serve as a NPDES permit for point source discharges from this facility to surface waters. This Order also serves as Waste Discharge Requirements (WDRs) pursuant to article 4, chapter 4, division 7 of the Water Code (commencing with section 13260).

**D. Background and Rationale for Requirements**. The Regional Water Board developed the requirements in this Order based on information submitted as part of the application, through monitoring and reporting programs, and other available information. The Fact Sheet (Attachment F), which contains background information and rationale for Order requirements, is hereby incorporated into this Order and constitutes part of the Findings for this Order. Attachments A through H are also incorporated into this Order.

**E. California Environmental Quality Act (CEQA).** Under Water Code section 13389, this action to adopt an NPDES permit is exempt from the provisions of CEQA, Public Resources Code sections 21100-21177.

**F. Technology-based Effluent Limitations***.* Section 301(b) of the CWA and implementing USEPA permit regulations at section 122.44, title 40 of the Code of Federal Regulations (CFR)[1] require that permits include conditions meeting applicable technology-based requirements at a minimum, and any more stringent effluent limitations necessary to meet applicable water quality standards. The discharge authorized by this Order must meet minimum federal technology-based requirements based on Secondary Treatment Standards at Part 133 and Best Professional Judgment (BPJ) in accordance with Part 125, section 125.3. A detailed discussion of the technology-based effluent limitations development is included in the Fact Sheet (Attachment F).

**G. Water Quality-based Effluent Limitations (WQBELs).** Section 301(b) of the CWA and 40 CFR 122.44(d) require that permits include limitations more stringent than applicable federal technology-based requirements where necessary to achieve applicable water quality standards. This Order contains requirements, expressed as a technology equivalence requirement, that are necessary to achieve water quality standards. The Regional Water Board has considered the factors listed in CWC Section 13241 in establishing these requirements. The rationale for these requirements, which consist of tertiary treatment or equivalent requirements, is discussed in the Fact Sheet.

40 CFR Section 122.44(d)(1)(i) mandates that permits include effluent limitations for all pollutants that are or may be discharged at levels that have the reasonable potential to cause or contribute to an exceedance of a water quality standard, including numeric and narrative objectives within a standard. Where reasonable potential has been established for a pollutant, but there is no numeric criterion or objective for the pollutant, water quality-based effluent limitations (WQBELs) must be established using: (1) EPA criteria guidance under CWA section 304(a), supplemented where necessary by other

[1] All further statutory references are to title 40 of the Code of Federal Regulations unless otherwise indicated.

TENTATIVE ORDER

relevant information; (2) an indicator parameter for the pollutant of concern; or (3) a calculated numeric water quality criterion, such as a proposed State criterion or policy interpreting the State's narrative criterion, supplemented with other relevant information, as provided in 40 CFR section 122.44(d)(1)(vi).

**H. Water Quality Control Plans.** The Regional Water Board adopted a *Water Quality Control Plan, Fourth Edition (Revised August 2006), for the Sacramento and San Joaquin River Basins* (hereinafter Basin Plan) that designates beneficial uses, establishes water quality objectives, and contains implementation programs and policies to achieve those objectives for all waters addressed through the plan. In addition, the Basin Plan implements State Water Resources Control Board (State Water Board) Resolution No. 88-63, which established state policy that all waters, with certain exceptions, should be considered suitable or potentially suitable for municipal or domestic supply. Thus, as discussed in detail in the Fact Sheet, beneficial uses applicable to Putah Creek, from Lake Berryessa to the Yolo Bypass, are as follows:

**Table 5. Basin Plan Beneficial Uses**

| Discharge Point | Receiving Water Name | Beneficial Use(s) |
|---|---|---|
| 001 and 002 | **Putah Creek, from Lake Berryessa to the Yolo Bypass**<br><br>**North Fork Putah Creek (Arboretum Waterway)** | Existing:<br>Municipal and domestic water supply (MUN); agricultural irrigation and stock watering (AGR); contact recreation water (REC-1); canoeing and rafting (REC-1); Non-contact water recreation (REC-2); warm freshwater habitat (WARM); warm spawning habitat (SPWN); and wildlife habitat (WILD).<br>Potential:<br>Cold freshwater habitat (COLD). |

The Basin Plan includes a list of Water Quality Limited Segments (WQLSs), which are defined as "…*those sections of lakes, streams, rivers or other fresh water bodies where water quality does not meet (or is not expected to meet) water quality standards even after the application of appropriate limitations for point sources (40 CFR 130, et seq.)*." The Basin Plan also states, "*Additional treatment beyond minimum federal standards will be imposed on dischargers to WQLSs. Dischargers will be assigned or allocated a maximum allowable load of critical pollutants so that water quality objectives can be met in the segment.*" Putah Creek is listed as a WQLS for mercury and metals in the 303(d) list of impaired water bodies. Effluent Limitations for these constituents are included in this Order.

This Order allows for the addition of Title 22 quality wastewater into the South Fork of Putah Creek through the rerouting of wastewater via the Arboretum Waterway. The Arboretum Waterway currently discharges into the South Fork of Putah Creek for storm water management purposes. A detailed discussion is included in the Fact Sheet.

**I. National Toxics Rule (NTR) and California Toxics Rule (CTR).** USEPA adopted the NTR on 22 December 1992, and later amended it on 4 May 1995, and 9 November 1999. About forty criteria in the NTR applied in California. On

TENTATIVE ORDER

18 May 2000, USEPA adopted the CTR. The CTR promulgated new toxics criteria for California and, in addition, incorporated the previously adopted NTR criteria that were applicable in the state. The CTR was amended on 13 February 2001. These rules contain water quality criteria for priority pollutants.

**J. State Implementation Policy.** On 2 March 2000, the State Water Board adopted the *Policy for Implementation of Toxics Standards for Inland Surface Waters, Enclosed Bays, and Estuaries of California* (State Implementation Policy or SIP). The SIP became effective on 28 April 2000 with respect to the priority pollutant criteria promulgated for California by the USEPA through the NTR and to the priority pollutant objectives established by the Regional Water Board in the Basin Plan. The SIP became effective on 18 May 2000 with respect to the priority pollutant criteria promulgated by the USEPA through the CTR. The State Water Board adopted amendments to the SIP on 24 February 2005 that became effective on 13 July 2005. The SIP establishes implementation provisions for priority pollutant criteria and objectives and provisions for chronic toxicity control. Requirements of this Order implement the SIP.

**K. Compliance Schedules and Interim Requirements.** In general, an NPDES permit must include final effluent limitations that are consistent with CWA section 301 and with 40 CFR 122.44(d). There are exceptions to this general rule. The State Water Board has concluded that where the Regional Water Board's Basin Plan allows for schedules of compliance and the Regional Water Board is newly interpreting a narrative standard, it may include schedules of compliance in the permit to meet effluent limits that implement a narrative standard. See In the Matter of Waste Discharge Requirements for Avon Refinery (State Board Order WQ 2001-06 at pp. 53-55). See also Communities for a Better Environment et al. v. State Water Resources Control Board, 34 Cal.Rptr.3d 396, 410 (2005). The Basin Plan for the Sacramento and San Joaquin Rivers includes a provision that authorizes the use of compliance schedules in NPDES permits for water quality objectives that are adopted after the date of adoption of the Basin Plan, which was September 25, 1995 (See Basin Plan at page IV-16). Consistent with the State Water Board's Order in the CBE matter, the Regional Water Board has the discretion to include compliance schedules in NPDES permits when it is including an effluent limitation that is a "new interpretation" of a narrative water quality objective. This conclusion is also consistent with the USEPA policies and administrative decisions. See, e.g., Whole Effluent Toxicity (WET) Control Policy. The Regional Water Board, however, is not required to include a schedule of compliance, but may issue a Time Schedule Order pursuant to Water Code section 13300 or a Cease and Desist Order pursuant to CWC section 13301 where it finds that the discharger is violating or threatening to violate the permit. The Regional Water Board will consider the merits of each case in determining whether it is appropriate to include a compliance schedule in a permit, and, consistent with the Basin Plan, should consider feasibility of achieving compliance, and must impose a schedule that is as short as practicable to achieve compliance with the objectives, criteria, or effluent limit based on the objective or criteria.

Section 2.1 of the SIP provides that, based on a Discharger's request and demonstration that it is infeasible for an existing Discharger to achieve immediate

TENTATIVE ORDER

compliance with an effluent limitation derived from a CTR criterion, compliance schedules may be allowed in an NPDES permit. Unless an exception has been granted under section 5.3 of the SIP, a compliance schedule may not exceed 5 years from the date that the permit is issued or reissued, nor may it extend beyond 10 years from the effective date of the SIP (or 18 May 2010) to establish and comply with CTR criterion-based effluent limitations. Where a compliance schedule for a final effluent limitation that exceeds 1 year, the Order must include interim numeric limitations for that constituent or parameter. Where allowed by the Basin Plan, compliance schedules and interim effluent limitations or discharge specifications may also be granted to allow time to implement a new or revised water quality objective. This Order does not include compliance schedules and includes interim effluent limitations and/or discharge specifications. A detailed discussion of the basis for the interim effluent limitation(s) and/or discharge specifications is included in the Fact Sheet.

**L. Alaska Rule.** On 30 March 2000, USEPA revised its regulation that specifies when new and revised state and tribal water quality standards (WQS) become effective for CWA purposes. (40 C.F.R. § 131.21; 65 Fed. Reg. 24641 (27 April 2000).) Under the revised regulation (also known as the Alaska rule), new and revised standards submitted to USEPA after 30 May 2000, must be approved by USEPA before being used for CWA purposes. The final rule also provides that standards already in effect and submitted to USEPA by 30 May 2000 may be used for CWA purposes, whether or not approved by USEPA.

**M. Stringency of Requirements for Individual Pollutants.** This Order contains both technology-based and water quality-based effluent limitations for individual pollutants. The technology-based effluent limitations consist of restrictions on $BOD_5$ and TSS. The water quality-based effluent limitations consist of restrictions on aluminum, ammonia, cyanide, nitrate + nitrite, selenium, total dissolved solids, and pathogens. This Order's technology-based pollutant restrictions implement the minimum, applicable federal technology-based requirements. In addition, this Order includes effluent limitations for BOD, TSS, to meet numeric objectives or protect beneficial uses. The rationale for including these limitations is explained in the Fact Sheet. In addition, the Regional Water Board has considered the factors in Water Code section 13241 in establishing these requirements in the previous Order No R5-2003-0003, Amendment No. 1.

Water quality-based effluent limitations have been scientifically derived to implement water quality objectives that protect beneficial uses. Both the beneficial uses and the water quality objectives have been approved pursuant to federal law and are the applicable federal water quality standards. To the extent that toxic pollutant water quality-based effluent limitations were derived from the CTR, the CTR is the applicable standard pursuant to 40 CFR 131.38. The scientific procedures for calculating the individual water quality-based effluent limitations are based on the CTR-SIP, which was approved by USEPA on 18 May 2000. All beneficial uses and water quality objectives contained in the Basin Plan were approved under state law and submitted to and approved by USEPA prior to 30 May 2000. Any water quality objectives and beneficial uses submitted to USEPA prior to 30 May 2000, but not approved by USEPA before that date, are nonetheless "*applicable water quality standards for purposes of the*

TENTATIVE ORDER

*[Clean Water] Act*" pursuant to 40 CFR section 131.21(c)(1). Collectively, this Order's restrictions on individual pollutants are no more stringent than required to implement the technology-based requirements of the CWA and the applicable water quality standards for purposes of the CWA.

**N. Antidegradation Policy.** 40 CFR Section 131.12 requires that the state water quality standards include an antidegradation policy consistent with the federal policy. The State Water Board established California's antidegradation policy in State Water Board Resolution No. 68-16. Resolution No. 68-16 incorporates the federal antidegradation policy where the federal policy applies under federal law. Resolution No. 68-16 requires that existing quality of waters be maintained unless degradation is justified based on specific findings. The Regional Water Board's Basin Plan implements, and incorporates by reference, both the state and federal antidegradation policies. The Discharger prepared an Antidegradation Analysis Report in accordance with the antidegradation provision of 40 CFR section 131.12 and State Water Board Resolution No. 68-16. The antidegradation analysis demonstrates that beneficial uses of the receiving water are maintained and degradation of the receiving water is limited through discharge of tertiary-treated Title 22-quality wastewater (implementation of Best Practicable Treatment or Control (BPTC)). The Regional Water Board finds that the proposed increased discharge that may cause degradation in the receiving water provides a social and economical benefit to the people of the State.

**O. Anti-Backsliding Requirements.** Sections 402(o)(2) and 303(d)(4) of the CWA and federal regulations at 40 CFR 122.44(l) prohibit backsliding in NPDES permits. These anti-backsliding provisions require effluent limitations in a reissued permit to be as stringent as those in the previous permit, with some exceptions where limitations may be relaxed. Some effluent limitations in this Order are less stringent that those in the previous Order. As discussed in detail in the Fact Sheet (Attachment F) this relaxation of effluent limitations is consistent with the anti-backsliding requirements of the CWA and federal regulations.

**P. Endangered Species Act.** This Order does not authorize any act that results in the taking of a threatened or endangered species or any act that is now prohibited, or becomes prohibited in the future, under either the California Endangered Species Act (Fish and Game Code sections 2050 to 2097) or the Federal Endangered Species Act (16 U.S.C.A. sections 1531 to 1544). This Order requires compliance with effluent limits, receiving water limits, and other requirements to protect the beneficial uses of waters of the state. The discharger is responsible for meeting all requirements of the applicable Endangered Species Act.

**Q. Monitoring and Reporting.** 40 CFR 122.48 requires that all NPDES permits specify requirements for recording and reporting monitoring results. CWC sections 13267 and 13383 authorize the Regional Water Board to require technical and monitoring reports. The Monitoring and Reporting Program establishes monitoring and reporting requirements to implement federal and State requirements. This Monitoring and Reporting Program is provided in Attachment E.

Additional quarterly monitoring of the effluent and receiving water is required during the third year of the permit for CTR priority pollutants to provide the data necessary to determine reasonable potential of the discharge to exceed water quality criteria and objectives during the next permit term.

**R. Salinity Limitations.** This Order contains interim effluent limitations for Electrical Conductivity (EC) that is to remain in effect for the term of the Order. This Order requires the Discharger to study appropriate EC levels to protect agricultural beneficial use in areas irrigated with water from the Putah Creek diverted downstream from the discharges. A final EC effluent limitation will be included in the subsequent renewal of this Order when site-specific water quality and agriculture-related information is available.

**S. Standard and Special Provisions.** Standard Provisions, which apply to all NPDES permits in accordance with CFR 122.41, and additional conditions applicable to specified categories of permits in accordance with 40 CFR 122.42, are provided in Attachment D. The discharger must comply with all standard provisions and with those additional conditions that are applicable under 40 CFR 122.42. The Regional Water Board has also included in this Order special provisions applicable to the Discharger. A rationale for the special provisions contained in this Order is provided in the attached Fact Sheet (Attachment F).

This Order requires the Discharger to develop a pollution minimization plan for mercury. In addition, implementation of existing source control for salinity and the evaluation of water reuse for irrigation and agricultural use are required in the Order.

**T. Provisions and Requirements Implementing State Law.** The provisions/requirements in subsections IV.B, IV.C, V.B, and VI.C.2.d, VI.C.2.e of this Order are included to implement state law only. These provisions/requirements are not required or authorized under the federal CWA; consequently, violations of these provisions/requirements are not subject to the enforcement remedies that are available for NPDES violations.

**U. Notification of Interested Parties.** The Regional Water Board has notified the Discharger and interested agencies and persons of its intent to prescribe Waste Discharge Requirements for the discharge and has provided them with an opportunity to submit their written comments and recommendations. Details of notification are provided in the Fact Sheet (Attachment F) of this Order.

**V. Consideration of Public Comment.** The Regional Water Board, in a public meeting, heard and considered all comments pertaining to the discharge. Details of the Public Hearing are provided in the Fact Sheet (Attachment F).

## III. DISCHARGE PROHIBITIONS

A. Discharge of wastewater at a location or in a manner different from that described in the Findings is prohibited.

B. The by-pass or overflow of wastes to surface waters is prohibited, except as allowed by Federal Standard Provisions I.G. and I.H. (Attachment D).

C. Neither the discharge nor its treatment shall create a nuisance as defined in Section 13050 of the California Water Code.

D. The Discharger shall not allow pollutant-free wastewater to be discharged into the collection, treatment, and disposal system in amounts that significantly diminish the system's capability to comply with this Order. Pollutant-free wastewater means rainfall, groundwater, cooling waters, and condensates that are essentially free of pollutants.

## IV. EFFLUENT LIMITATIONS AND DISCHARGE SPECIFICATIONS

### A. Effluent Limitations – Discharge Point No. 001 and 002

#### 1. Final Effluent Limitations – Discharge Point No. 001 and 002

The Discharger shall maintain compliance with the following effluent limitations at Discharge Point No. 001 and No. 002, with compliance measured at Monitoring Location EFF-001 as described in the attached MRP (Attachment E):

a. The Discharger shall maintain compliance with the effluent limitations specified in Table 6:

**Table 6. Effluent Limitations**

| Parameter | Units | Effluent Limitations | | | | |
|---|---|---|---|---|---|---|
| | | Average Monthly | Average Weekly | Maximum Daily | Instantaneous Minimum | Instantaneous Maximum |
| Biochemical Oxygen Demand ($BOD_5$) (5-day @ 20°C) | mg/L | 10[2] | 15[2] | 20[2] | -- | -- |
| | lbs/day[1] | 300 | 450 | 600 | -- | -- |
| Total Suspended Solids | mg/L | 10 | 15 | 20 | -- | -- |
| | lbs/day[1] | 300 | 450 | 600 | -- | -- |
| pH | standard units | -- | -- | -- | 6.5 | 8.5 |
| Ammonia (as N) (1 May – 31 October) | mg/L | 0.74 | -- | 1.53 | -- | -- |
| | lbs/day[1] | 22 | -- | 46 | -- | -- |
| Ammonia (as N) (1 November – 30 April) | mg/L | 1.11 | -- | 2.14 | -- | -- |
| | lbs/day[1] | 33 | -- | 64 | -- | -- |
| Aluminum (total) | µg/L | 276 | -- | 750 | -- | -- |

TENTATIVE ORDER

| Parameter | Units | Effluent Limitations | | | | |
|---|---|---|---|---|---|---|
| | | Average Monthly | Average Weekly | Maximum Daily | Instantaneous Minimum | Instantaneous Maximum |
| Cyanide | µg/L | 4.3 | -- | 8.5 | -- | -- |
| Nitrate + Nitrite (as N) | mg/L | 10 | -- | -- | -- | -- |
| | lbs/day[1] | 300 | -- | -- | -- | -- |
| Selenium (total) | µg/L | 3.5 | -- | 9.2 | -- | -- |
| | lbs/day[1] | 0.11 | -- | 0.28 | -- | -- |
| Total Coliform Organisms | MPN | -- | 2.2 | 23[3] | -- | 240 |

1 Based on an average dry weather flow of 3.6 mgd
2 To be ascertained as a 24-hour composite.
3 Not to exceed 23 MPN more than once in a 30-day period.

b. **Percent Removal:** The average monthly percent removal of BOD 5-day 20°C and total suspended solids shall not be less than 85 percent.

c. **Acute Whole Effluent Toxicity.** Survival of aquatic organisms in 96-hour bioassays of undiluted waste shall be no less than:

   i. 70%, minimum for any one bioassay; and
   ii. 90%, median for any three consecutive bioassays.

d. **Temperature.** The maximum temperature of the discharge shall not exceed the natural receiving water temperature by more than 20°F.

e. **Total Residual Chlorine.** Effluent total residual chlorine shall not exceed:

   i. 0.01 mg/L, as a 4-day average;
   ii. 0.02 mg/L, as a 1-hour average;

f. **Total Coliform Organisms.** Effluent total coliform organisms shall not exceed:

   i. 2.2/23 most probable number (MPN) per 100 mL, as a 7-day median; and
   ii. 23/100 mL, more than once in any 30-day period.
   iii. 240 MPN/100mL, at any time.

g. **Average Dry Weather Flow.** The Average Dry Weather Flow shall not exceed 3.6 million gallons per day (mgd).

h. **Chronic Whole Effluent Toxicity.** The effluent discharge shall not cause chronic toxicity in the receiving water.

i. **Aluminum.** The effluent annual average aluminum shall not exceed 200 µg/L.

**2. Interim Effluent Limitations**

TENTATIVE ORDER

a. **Electrical Conductivity.** Effective immediately, the effluent electrical conductivity shall not exceed 1,400 µmhos/cm as a monthly average. This performance-based effluent limitation shall remain in effect until the Regional Water Board establishes final effluent limitations based on the Salinity/EC Site–Specific Study required in Special Provisions VI.C.2.c.

b. **Mercury, Total.** The total annual mass discharge of total mercury shall not exceed 0.10 pounds. This interim performance-base effluent limitation shall be in effect until the Regional Water Board establishes final effluent limitations after adoption of the Sacramento-San Joaquin Delta Methylmercury TMDL.

### B. Land Discharge Specifications – NOT APPLICABLE

### C. Reclamation Specifications – NOT APPLICABLE

## V. RECEIVING WATER LIMITATIONS

### A. Surface Water Limitations

Receiving water limitations are based on water quality objectives contained in the Basin Plan and are a required part of this Order. The discharge shall not cause the following in Putah Creek:

1. **Bacteria**. The fecal coliform concentration, based on a minimum of not less than five samples for any 30-day period, to exceed a geometric mean of 200 MPN/100 mL, nor more than ten percent of the total number of fecal coliform samples taken during any 30-day period to exceed 400 MPN/100 mL

2. **Biostimulatory Substances**. Water to contain biostimulatory substances which promote aquatic growths in concentrations that cause nuisance or adversely affect beneficial uses.

3. **Chemical Constituents**. Chemical constituents to be present in concentrations that adversely affect beneficial uses.

4. **Color**. Discoloration that causes nuisance or adversely affects beneficial uses.

5. **Dissolved Oxygen**:

   a. The monthly median of the mean daily dissolved oxygen concentration to fall below 85 percent of saturation in the main water mass;
   b. The 95 percentile dissolved oxygen concentration to fall below 75 percent of saturation; nor
   c. The dissolved oxygen concentration to be reduced below 7.0 mg/L at any time.

TENTATIVE ORDER

6. **Floating Material**. Floating material to be present in amounts that cause nuisance or adversely affect beneficial uses.

7. **Oil and Grease**. Oils, greases, waxes, or other materials to be present in concentrations that cause nuisance, result in a visible film or coating on the surface of the water or on objects in the water, or otherwise adversely affect beneficial uses.

8. **pH**. The pH to be depressed below 6.5, raised above 8.5, nor changed by more than 0.5 units. A one-month averaging period may be applied when calculating the pH change of 0.5 units.

9. **Pesticides**:
   a. Pesticides to be present, individually or in combination, in concentrations that adversely affect beneficial uses;
   b. Pesticides to be present in bottom sediments or aquatic life in concentrations that adversely affect beneficial uses;
   c. Total identifiable persistent chlorinated hydrocarbon pesticides to be present in the water column at concentrations detectable within the accuracy of analytical methods approved by USEPA or the Executive Officer**/**prescribed in *Standard Methods for the Examination of Water and Wastewater, 18th Edition*, or other equivalent methods approved by the Executive Officer.
   d. Pesticide concentrations to exceed those allowable by applicable antidegradation policies (see State Water Board Resolution No. 68-16 and 40 CFR §131.12.).
   e. Pesticide concentrations to exceed the lowest levels technically and economically achievable.
   f. Pesticides to be present in concentration in excess of the maximum contaminant levels set forth in California Code of Regulations, Title 22, Division 4, Chapter 15**/**specified in Table 64444-A (Organic Chemicals) of Section 64444 of Title 22 of the California Code of Regulations.
   g. Thiobencarb to be present in excess of 1.0 µg/L.

10. **Radioactivity**:
   a. Radionuclides to be present in concentrations that are harmful to human, plant, animal, or aquatic life nor that result in the accumulation of radionuclides in the food web to an extent that presents a hazard to human, plant, animal, or aquatic life.
   b. Radionuclides to be present in excess of the maximum contaminant levels specified in Table 4 (MCL Radioactivity) of Section 64443 of Title 22 of the California Code of Regulations.

11. **Suspended Sediments**. The suspended sediment load and suspended sediment discharge rate of surface waters to be altered in such a manner as to cause nuisance or adversely affect beneficial uses.

12. **Settleable Substances**. Substances to be present in concentrations that result in the deposition of material that causes nuisance or adversely affects beneficial uses.

TENTATIVE ORDER

13. **Suspended Material**. Suspended material to be present in concentrations that cause nuisance or adversely affect beneficial uses.

14. **Taste and Odors**. Taste- or odor-producing substances to be present in concentrations that impart undesirable tastes or odors to fish flesh or other edible products of aquatic origin, or that cause nuisance, or otherwise adversely affect beneficial uses.

15. **Temperature**. The natural temperature to be increased by more than 5°F.

16. **Toxicity**. Toxic substances to be present, individually or in combination, in concentrations that produce detrimental physiological responses in human, plant, animal, or aquatic life.

17. **Turbidity**. The turbidity to increase as follows:
    a. More than 1 Nephelometric Turbidity Unit (NTU) where natural turbidity is between 0 and 5 NTUs.
    b. More than 20 percent where natural turbidity is between 5 and 50 NTUs.
    c. More than 10 NTU where natural turbidity is between 50 and 100 NTUs.
    d. More than 10 percent where natural turbidity is greater than 100 NTUs.

### B. Groundwater Limitations

1. Release of waste constituents from any storage, treatment, or disposal component associated with the WWTP, in combination with other sources, shall not cause the underlying groundwater to contain waste constituents in concentrations greater than background water quality or water quality objectives, whichever is greater. The discharge shall not cause the groundwater to exceed water quality objectives, unreasonably affect beneficial uses, or cause a condition of pollution or nuisance.

2. Release of waste constituents from any storage, treatment, or disposal component associated with the WWTP shall not, in combination with other sources of the waste constituents, cause groundwater within influence of the WWTP to contain waste constituents in concentrations in excess of natural background quality or that listed below, whichever is greater:

    a. Total coliform organisms median of 2.2 MPN/100 mL over any seven-day period.

## VI. PROVISIONS

### A. Standard Provisions

1. The Discharger shall comply with all Standard Provisions included in Attachment D of this Order.

2. The Discharger shall comply with the following provisions:

TENTATIVE ORDER

a. If the Discharger's wastewater treatment plant is publicly owned or subject to regulation by California Public Utilities Commission, it shall be supervised and operated by persons possessing certificates of appropriate grade according to Title 23, CCR, Division 3, Chapter 26.

b. After notice and opportunity for a hearing, this Order may be terminated or modified for cause, including, but not limited to:

   i. violation of any term or condition contained in this Order;

   ii. obtaining this Order by misrepresentation or by failing to disclose fully all relevant facts;

   iii. a change in any condition that requires either a temporary or permanent reduction or elimination of the authorized discharge; and

   iv. a material change in the character, location, or volume of discharge.

   The causes for modification include:

   - *New regulations.* New regulations have been promulgated under Section 405(d) of the Clean Water Act, or the standards or regulations on which the permit was based have been changed by promulgation of amended standards or regulations or by judicial decision after the permit was issued.

   - *Land application plans.* When required by a permit condition to incorporate a land application plan for beneficial reuse of sewage sludge, to revise an existing land application plan, or to add a land application plan.

   - *Change in sludge use or disposal practice.* Under 40 Code of Federal Regulations (CFR) 122.62(a)(1), a change in the Discharger's sludge use or disposal practice is a cause for modification of the permit. It is cause for revocation and reissuance if the Discharger requests or agrees.

   The Regional Water Board may review and revise this Order at any time upon application of any affected person or the Regional Water Board's own motion.

c. If a toxic effluent standard or prohibition (including any scheduled compliance specified in such effluent standard or prohibition) is established under Section 307(a) of the CWA, or amendments thereto, for a toxic pollutant that is present in the discharge authorized herein, and such standard or prohibition is more stringent than any limitation upon such pollutant in this Order, the Regional Water Board will revise or modify this Order in accordance with such toxic effluent standard or prohibition.

TENTATIVE ORDER

The Discharger shall comply with effluent standards and prohibitions within the time provided in the regulations that establish those standards or prohibitions, even if this Order has not yet been modified.

d. This Order shall be modified, or alternately revoked and reissued, to comply with any applicable effluent standard or limitation issued or approved under Sections 301(b)(2)(C) and (D), 304(b)(2), and 307(a)(2) of the CWA, if the effluent standard or limitation so issued or approved:

   i. contains different conditions or is otherwise more stringent than any effluent limitation in the Order; or

   ii. controls any pollutant limited in the Order.

   The Order, as modified or reissued under this paragraph, shall also contain any other requirements of the CWA then applicable.

e. The provisions of this Order are severable. If any provision of this Order is found invalid, the remainder of this Order shall not be affected.

f. The Discharger shall take all reasonable steps to minimize any adverse effects to waters of the State or users of those waters resulting from any discharge or sludge use or disposal in violation of this Order. Reasonable steps shall include such accelerated or additional monitoring as necessary to determine the nature and impact of the non-complying discharge or sludge use or disposal.

g. The Discharger shall ensure compliance with any existing or future pretreatment standard promulgated by USEPA under Section 307 of the CWA, or amendment thereto, for any discharge to the municipal system.

h. The discharge of any radiological, chemical or biological warfare agent or high-level, radiological waste is prohibited.

i. A copy of this Order shall be maintained at the discharge facility and be available at all times to operating personnel. Key operating personnel shall be familiar with its content.

j. Safeguard to electric power failure:

   i. The Discharger shall provide safeguards to assure that, should there be reduction, loss, or failure of electric power, the discharge shall comply with the terms and conditions of this Order.

   ii. Upon written request by the Regional Water Board the Discharger shall submit a written description of safeguards. Such safeguards may include alternate power sources, standby generators, retention capacity, operating procedures, or other means. A description of the safeguards provided shall include an analysis of the frequency, duration, and impact of power failures experienced over the past five years on effluent quality and on the capability

TENTATIVE ORDER

of the Discharger to comply with the terms and conditions of the Order. The adequacy of the safeguards is subject to the approval of the Regional Water Board.

iii. Should the treatment works not include safeguards against reduction, loss, or failure of electric power, or should the Regional Water Board not approve the existing safeguards, the Discharger shall, within ninety days of having been advised in writing by the Regional Water Board that the existing safeguards are inadequate, provide to the Regional Water Board and USEPA a schedule of compliance for providing safeguards such that in the event of reduction, loss, or failure of electric power, the Discharger shall comply with the terms and conditions of this Order. The schedule of compliance shall, upon approval of the Regional Water Board, become a condition of this Order.

k. The Discharger, upon written request of the Regional Water Board, shall file with the Board a technical report on its preventive (failsafe) and contingency (cleanup) plans for controlling accidental discharges, and for minimizing the effect of such events. This report may be combined with that required under Regional Water Board Standard Provision VI.A.2.m.

The technical report shall:

i. Identify the possible sources of spills, leaks, untreated waste by-pass, and contaminated drainage. Loading and storage areas, power outage, waste treatment unit outage, and failure of process equipment, tanks and pipes should be considered.

ii. Evaluate the effectiveness of present facilities and procedures and state when they became operational.

iii. Predict the effectiveness of the proposed facilities and procedures and provide an implementation schedule containing interim and final dates when they will be constructed, implemented, or operational.

The Regional Water Board, after review of the technical report, may establish conditions which it deems necessary to control accidental discharges and to minimize the effects of such events. Such conditions shall be incorporated as part of this Order, upon notice to the Discharger.

l. A publicly owned treatment works (POTW) whose waste flow has been increasing, or is projected to increase, shall estimate when flows will reach hydraulic and treatment capacities of its treatment and disposal facilities. The projections shall be made in January, based on the last three years' average dry weather flows, peak wet weather flows and total annual flows, as appropriate. When any projection shows that capacity of any part of the facilities may be exceeded in four years, the Discharger shall notify the Regional Water Board by 31 January. A copy of the notification shall be sent to appropriate local elected officials, local permitting agencies and the press. Within 120 days of the

TENTATIVE ORDER

notification, the Discharger shall submit a technical report showing how it will prevent flow volumes from exceeding capacity or how it will increase capacity to handle the larger flows. The Regional Water Board may extend the time for submitting the report.

m. The Discharger shall submit technical reports as directed by the Executive Officer. All technical reports required herein that involve planning, investigation, evaluation, or design, or other work requiring interpretation and proper application of engineering or geologic sciences, shall be prepared by or under the direction of persons registered to practice in California pursuant to California Business and Professions Code, sections 6735, 7835, and 7835.1. To demonstrate compliance with Title 16, CCR, sections 415 and 3065, all technical reports must contain a statement of the qualifications of the responsible registered professional(s). As required by these laws, completed technical reports must bear the signature(s) and seal(s) of the registered professional(s) in a manner such that all work can be clearly attributed to the professional responsible for the work.

n. Laboratories that perform sample analyses must be identified in all monitoring reports submitted to the Regional Water Board and USEPA.

o. The Discharger shall conduct analysis on any sample provided by USEPA as part of the Discharge Monitoring Quality Assurance (DMQA) program. The results of any such analysis shall be submitted to USEPA's DMQA manager.

p. Effluent samples shall be taken downstream of the last addition of wastes to the treatment or discharge works where a representative sample may be obtained prior to mixing with the receiving waters. Samples shall be collected at such a point and in such a manner to ensure a representative sample of the discharge.

q. All monitoring and analysis instruments and devices used by the Discharger to fulfill the prescribed monitoring program shall be properly maintained and calibrated as necessary, at least yearly, to ensure their continued accuracy.

r. The Discharger shall file with the Regional Water Board technical reports on self-monitoring performed according to the detailed specifications contained in the Monitoring and Reporting Program attached to this Order.

s. The results of all monitoring required by this Order shall be reported to the Regional Water Board, and shall be submitted in such a format as to allow direct comparison with the limitations and requirements of this Order. Unless otherwise specified, discharge flows shall be reported in terms of the monthly average and the daily maximum discharge flows.

t. The Regional Water Board is authorized to enforce the terms of this permit under several provisions of the CWC, including, but not limited to, sections 13385, 13386, and 13387.

TENTATIVE ORDER

u. For POTWs, prior to making any change in the point of discharge, place of use, or purpose of use of treated wastewater that results in a decrease of flow in any portion of a watercourse, the Discharger must file a petition with the State Water Board, Division of Water Rights, and receive approval for such a change. (CWC section 1211).

v. In the event the Discharger does not comply or will be unable to comply for any reason, with any prohibition, maximum daily effluent limitation, 1-hour average effluent limitation, or receiving water limitation contained in this Order, the Discharger shall notify the Regional Water Board by telephone (916) 464-3291 within 24 hours of having knowledge of such noncompliance, and shall confirm this notification in writing within five days, unless the Regional Water Board waives confirmation. The written notification shall include the information required by Attachment D, Section V.E.1 [40 CFR section 122.41(l)(6)(i)].

## B. Monitoring and Reporting Program (MRP) Requirements

1. The Discharger shall comply with the MRP, and future revisions thereto, in Attachment E of this Order.

## C. Special Provisions

### 1. Reopener Provisions

a. This Order may be reopened for modification, or revocation and reissuance, as a result of the detection of a reportable priority pollutant generated by special conditions included in this Order. These special conditions may be, but are not limited to, fish tissue sampling, whole effluent toxicity, monitoring requirements on internal waste stream(s), and monitoring for surrogate parameters. Additional requirements may be included in this Order as a result of the special condition monitoring data.

b. Conditions that necessitate a major modification of a permit are described in 40 CFR section 122.62, including:

   i. If new or amended applicable water quality standards are promulgated or approved pursuant to Section 303 of the CWA, or amendments thereto, this permit may be reopened and modified in accordance with the new or amended standards.

   ii. When new information, that was not available at the time of permit issuance, would have justified different permit conditions at the time of issuance.

c. **Mercury.** If a TMDL program is adopted, this Order shall be reopened and the interim mass effluent limitation modified (higher or lower) or impose an effluent concentration limitation if necessary to implement the provisions of the TMDL

TENTATIVE ORDER

program as adopted, and approved by the State Water Board, Office of Administrative Law, and US EPA. If the Regional Water Board determines that a mercury offset program is feasible for Dischargers subject to a NPDES permit, then this Order may be reopened to reevaluate the interim mercury mass loading limitation(s) and the need for a mercury offset program for the Discharger.

d. **Whole Effluent Toxicity.** As a result of a Toxicity Reduction Evaluation (TRE), this Order may be reopened to include a chronic toxicity limitation, a new acute toxicity limitation, and/or a limitation for a specific toxicant identified in the TRE. Additionally, if the State Water Board revises the SIP's toxicity control provisions that would require the establishment of numeric chronic toxicity effluent limitations, this Order may be reopened to include a numeric chronic toxicity effluent limitation based on the new provisions.

e. **Water Effects Ratios (WER) and Metal Translators.** A default WER of 1.0 has been used in this Order for calculating CTR criteria for applicable priority pollutant inorganic constituents. If the Discharger performs studies to determine site-specific WERs and/or site-specific dissolved-to-total metal translators, this Order may be reopened to modify the effluent limitations for the applicable inorganic constituents.

f. **Salinity/EC Site-Specific Studies.** This Order requires the Discharger to complete and submit a report on the results of a Salinity/EC site-specific investigation to determine appropriate EC levels necessary to protect downstream beneficial uses and to evaluate actual downstream uses. The studies shall be completed and submitted to the Regional Water Board as specified in section VI.C.2.c. of this Order. Based on a review of the results of the report on the salinity/EC site specific studies, this Order may be reopened for addition of a final effluent limitation and requirements for salinity.

g. **Constituent Study.** This Order requires the Discharger to complete and submit a Constituent Study that includes monitoring for California Toxic Rule (CTR) and non-CTR constituents (as listed in Attachment H of this Order) in the North Fork of Putah Creek (Arboretum Waterway). If, after review of the study results, it is determined that the discharge to the Arboretum has reasonable potential to cause or contribute to an exceedance of a water quality objective, this Order may be reopened and effluent limitations added for the subject constituents of concern.

h. **Groundwater Monitoring.** This Order requires the Discharger to monitor the groundwater and submit monitoring reports as specified in Attachment E, Section VIII.B. This Order may be reopened and additional groundwater limitations added.

TENTATIVE ORDER

## 2. Special Studies, Technical Reports and Additional Monitoring Requirements

a. **Chronic Whole Effluent Toxicity.** For compliance with the Basin Plan's narrative toxicity objective, this Order requires the Discharger to conduct chronic whole effluent toxicity testing, as specified in the Monitoring and Reporting Program (Attachment E, Section V.). Furthermore, this Provision requires the Discharger to investigate the causes of, and identify corrective actions to reduce or eliminate effluent toxicity. If the discharge exceeds the toxicity numeric monitoring trigger established in this Provision, the Discharger is required to initiate a Toxicity Reduction Evaluation (TRE), in accordance with an approved TRE Work Plan, and take actions to mitigate the impact of the discharge and prevent reoccurrence of toxicity. A TRE is a site-specific study conducted in a stepwise process to identify the source(s) of toxicity and the effective control measures for effluent toxicity. TREs are designed to identify the causative agents and sources of whole effluent toxicity, evaluate the effectiveness of the toxicity control options, and confirm the reduction in effluent toxicity. This Provision includes requirements for the Discharger to develop and submit a TRE Work Plan and includes procedures for accelerated chronic toxicity monitoring and TRE initiation.

i. **Initial Investigative Toxicity Reduction Evaluation (TRE) Work Plan. Within 90 days of the effective date of this Order,** the Discharger shall submit to the Regional Water Board an Initial Investigative TRE Work Plan for approval by the Executive Officer. This should be a one to two page document including, at minimum:

a) A description of the investigation and evaluation techniques that will be used to identify potential causes and sources of effluent toxicity, effluent variability, and treatment system efficiency;

b) A description of the facility's methods of maximizing in-house treatment efficiency and good housekeeping practices, and a list of all chemicals used in operation of the facility; and

c) A discussion of who will conduct the Toxicity Identification Evaluation, if necessary (i.e. an in-house expert or outside contractor).

i. **Accelerated Monitoring and TRE Initiation.** When the numeric toxicity monitoring trigger is exceeded during regular chronic toxicity monitoring, and the testing meets all test acceptability criteria, the Discharger shall initiate accelerated monitoring as required in the Accelerated Monitoring Specifications. WET testing results exceeding the monitoring trigger during accelerated monitoring demonstrates a pattern of toxicity and requires the Discharger to initiate a TRE to address the effluent toxicity.

ii. **Numeric Monitoring Trigger.** The numeric toxicity monitoring trigger is > **1 TUc** (where TUc = 100/NOEC). The monitoring trigger is not an

TENTATIVE ORDER

effluent limitation; it is the toxicity threshold at which the Discharger is required to begin accelerated monitoring and initiate a TRE.

iii. **Accelerated Monitoring Specifications.** If the monitoring trigger is exceeded during regular chronic toxicity testing, within 14-days of notification by the laboratory of the test results, the Discharger shall initiate accelerated monitoring. Accelerated monitoring shall consist of four (4) chronic toxicity tests every two weeks using the species that exhibited toxicity. The following protocol shall be used for accelerated monitoring and TRE initiation:

a) If the results of four (4) consecutive accelerated monitoring tests do not exceed the monitoring trigger, the Discharger may cease accelerated monitoring and resume regular chronic toxicity monitoring. However, notwithstanding the accelerated monitoring results, if there is adequate evidence of a pattern of effluent toxicity, the Executive Officer may require that the Discharger initiate a TRE.

b) If the source(s) of the toxicity is easily identified (i.e. temporary plant upset), the Discharger shall make necessary corrections to the facility and shall continue accelerated monitoring until four (4) consecutive accelerated tests do not exceed the monitoring trigger. Upon confirmation that the effluent toxicity has been removed, the Discharger may cease accelerated monitoring and resume regular chronic toxicity monitoring.

c) If the result of any accelerated toxicity test exceeds the monitoring trigger, the Discharger shall cease accelerated monitoring and initiate a TRE to investigate the cause(s) of, and identify corrective actions to reduce or eliminate effluent toxicity. Within thirty (30) days of notification by the laboratory of the test results exceeding the monitoring trigger during accelerated monitoring, the Discharger shall submit a TRE Action Plan to the Regional Water Board including, at minimum:

1) Specific actions the Discharger will take to investigate and identify the cause(s) of toxicity, including TRE WET monitoring schedule;

2) Specific actions the Discharger will take to mitigate the impact of the discharge and prevent the recurrence of toxicity; and

3) A schedule for these actions.

Within sixty (60) days of notification by the laboratory of the test results, the Discharger shall submit to the Regional Water Board a TRE Work Plan for approval by the Executive Officer. The TRE Work Plan shall outline the procedures for identifying the source(s) of, and reducing or eliminating

TENTATIVE ORDER

effluent toxicity. The TRE Work Plan must be developed in accordance with EPA guidance[2].

b. **Water Reclamation Report.** A water reclamation report is required to evaluate beneficial reuse for uses including (but not limited to) landscape irrigation and agricultural use on the University of California Davis campus. The report shall be completed in conformance with the following schedule:

| Task | Compliance Date |
|---|---|
| Submit Work Plan and Time Schedule | **No later than 3 months** from adoption of this Order |
| Submit Study Report | **No later than four years** from adoption of this Order |

c. **Salinity/EC Site–Specific Study.** The Discharger shall complete and submit a report on the results of a site-specific investigation of appropriate EC levels to protect agricultural beneficial use in areas irrigated with water from Putah Creek diverted downstream from the discharge. The study shall determine the sodium adsorption ratio of soils in the affected area, the effects of rainfall and flood-induced leaching, and background water quality. The study shall evaluate how climate, soil chemistry, background water quality, rainfall, and flooding affect EC requirements. Based on these factors, the study shall recommend site-specific numeric values for EC that fully protect agricultural uses.

The Discharger shall comply with the following time schedule to complete the study:

| Task | Compliance Date |
|---|---|
| Submit Work Plan and Time Schedule | **Within 6 months** of adoption date of this Order |
| Complete Study | **Within three years** of adoption date of this Order |
| Submit Study Report | **Within three months** of completion of study |

d. **Constituent Study.** A receiving water monitoring study for the North Fork of Putah Creek (Arboretum Waterway) is required to ensure adequate information is available to conduct a reasonable potential analysis. During the first year of the permit, the Discharger shall conduct quarterly monitoring of the North Fork of Putah Creek for all priority pollutants and other constituents of concern as described in Attachment H. Dioxin and Furan sampling shall be performed twice

TENTATIVE ORDER

[2] See Attachment F (Fact Sheet) Section VII.B.2.a. for a list of EPA guidance documents that must be considered in development of the TRE Workplan.

during the year as described in Attachment H. Monitoring shall be performed at RSW-002U.

The Discharger shall comply with the following time schedule in conducting a study of priority pollutants and other pollutants of concern in the Arboretum Waterway:

| Task | Compliance Date |
|---|---|
| Submit Work Plan and Time Schedule | **Within 3 months** of adoption date of this Order |
| Submit Study Report | **Within 18 months** of adoption date of this Order |

e. **Groundwater Monitoring.** The Discharger shall monitor the groundwater as specified in Attachment E, Section VIII.B.1. If the monitoring shows that any constituent concentrations are increased above background water quality, the Discharger shall submit a technical report within 90 days following identification of groundwater impacts describing the groundwater technical report results and critiquing each evaluated component of the Facility with respect to Best Practicable Treatment or Control (BPTC) and minimizing the discharge's impact on groundwater quality. In no case shall the discharge be allowed to exceed the Groundwater Limitations. This Order may be reopened and additional groundwater limitations added.

f. **Best Practicable Treatment or Control (BPTC) Evaluation Tasks**. If groundwater monitoring indicates that any constituent concentrations are increased above background water quality, the Discharger shall propose a work plan and schedule for providing BPTC as required by Resolution 68-16. The technical report describing the work plan and schedule shall contain a preliminary evaluation of each component and propose a time schedule for completing the comprehensive technical evaluation.

Following completion of the comprehensive technical evaluation, the Discharger shall submit a technical report describing the evaluation's results and critiquing each evaluated component with respect to BPTC and minimizing the discharge's impact on groundwater quality. Where deficiencies are documented, the technical report shall provide recommendations for necessary modifications (*e.g.*, new or revised salinity source control measures, WWTP component upgrade and retrofit) to achieve BPTC and identify the source of funding and proposed schedule for modifications. The schedule shall be as short as practicable but in no case shall completion of the necessary modifications exceed four years past the Executive Officer's determination of the adequacy of the comprehensive technical evaluation, unless the schedule is reviewed and specifically approved by the Regional Water Board. The technical report shall include specific methods the Discharger proposes as a means to measure processes and assure continuous optimal performance of BPTC measures. The

TENTATIVE ORDER

Discharger shall comply with the following compliance schedule in implementing the work required by this Provision:

| Task | Compliance Date |
|---|---|
| 1 -Submit technical report: work plan and schedule for comprehensive evaluation | **Within 6 months** following identification of groundwater impact |
| 2 -Commence comprehensive evaluation | **30 days** following Executive Officer approval of Task 1. |
| 3 -Complete comprehensive evaluation | As established by Task 1 and/or 2 years following Task 2, whichever is sooner |
| 4 -Submit technical report: comprehensive evaluation results | **60 days** following completion of Task 3. |
| 5 -Submit annual report describing the overall status of BPTC implementation and compliance with groundwater limitations over the past reporting year | To be submitted in accordance with the MRP (Attachment E, Section X.D.1.) |

**3. Best Management Practices and Pollution Minimization**

a. **Pollution Minimization Plan for Mercury.** The Discharger shall prepare and implement a Pollution Minimization Plan (Plan) for mercury as outlined in the Fact Sheet, Attachment F, Section VII.B.3.a. A work plan and time schedule for preparation of the Plan shall be completed and submitted **within one (1) year of the effective date of this Order** for approval. The Plan shall be completed and submitted to the Regional Water Board **within two (2) years following work plan approval**, and progress reports shall be submitted in accordance with the Monitoring and Reporting Program (Attachment E, Section X.D.1.).

**4. Construction, Operation and Maintenance Specifications**

a. **Treatment Pond Operating Requirements.**

i. The treatment facilities and emergency storage ponds shall be designed, constructed, operated, and maintained to prevent inundation or washout due to floods with a 100-year return frequency.

ii. Public contact with wastewater shall be precluded through such means as fences, signs, and other acceptable alternatives.

iii. Ponds shall be managed to prevent breeding of mosquitoes. In particular,

a) An erosion control program should assure that small coves and irregularities are not created around the perimeter of the water surface.
b) Weeds shall be minimized.

TENTATIVE ORDER

c) Dead algae, vegetation, and debris shall not accumulate on the water surface.

iv. Freeboard in the emergency storage pond shall never be less than two feet (measured vertically to the lowest point of overflow), except if lesser freeboard does not threaten the integrity of the pond, no overflow of the pond occurs, and lesser freeboard is due to direct precipitation or storm water runoff occurring as a result of annual precipitation with greater than a 100-year recurrence interval, or a storm even with an intensity greater than a 25-year, 24-hour storm event.

v. Ponds shall have sufficient capacity to accommodate allowable wastewater flow and design seasonal precipitation and ancillary inflow and infiltration during the non-irrigation season. Design seasonal precipitation shall be based on total annual precipitation using a return period of 100 years, distributed monthly in accordance with historical rainfall patterns. Freeboard shall never be less than two feet (measured vertically to the lowest point of overflow).

vi. Objectionable odors originating at this Facility shall not be perceivable beyond the limits of the wastewater treatment plant.

b. **Ultraviolet (UV) Disinfection System Operating Specifications.** The Discharger shall operate the UV disinfection system to provide a minimum UV dose of 100 millijoules per square centimeter ($mJ/cm^2$) at peak daily flow, unless otherwise approved by the California Department of Public Health, and shall maintain an adequate dose for disinfection while discharging to Putah Creek, unless otherwise approved by the California Department of Public Health.

i. The Discharger shall provide continuous, reliable monitoring of flow, UV transmittance, UV power, and turbidity.

ii. The Discharger shall operate the treatment system to insure that turbidity prior to disinfection shall not exceed 2 NTU as a daily average, and 5 NTU more than 5 percent of the time within a 24-hour period, and 10 NTU, at any time.

iii. The UV transmittance (at 254 nanometers) in the wastewater exiting the UV disinfection system shall not fall below 55 percent of maximum at any time.

Iv. The quartz sleeve and cleaning system components must be visually inspected per the manufacturer's operations manual for physical wear (scoring, solarization, seal leaks, cleaning fluid levels, etc.) and to check the efficacy of the cleaning system.

v. The sleeves must be cleaned periodically as necessary to meet the requirements.

TENTATIVE ORDER

vi. Lamps must be replaced per the manufacturer's operations manual, or sooner, if there are indications the lamps are failing to provide adequate disinfection. Lamp age and lamp replacement records must be maintained.

vii. The facility must be operated in accordance with an operations and maintenance program that assures adequate disinfection.

**5. Special Provisions for Municipal Facilities (POTWs Only)**

a. **Sludge/Biosolids Discharge Specifications**

i. Collected screenings, residual sludge, biosolids, and other solids removed from liquid wastes shall be disposed of in a manner approved by the Executive Officer, and consistent with *Consolidated Regulations for Treatment, Storage, Processing, or Disposal of Solid Waste,* as set forth in Title 27, CCR, Division 2, Subdivision 1, section 20005, et seq. Removal for further treatment, disposal, or reuse at sites (i.e., landfill, composting sites, soil amendment sites) that are operated in accordance with valid waste discharge requirements issued by a regional water quality control board will satisfy these specifications.

ii. Sludge and solid waste shall be removed from screens, sumps, ponds, clarifiers, etc. as needed to ensure optimal plant performance.

iii. The treatment of sludge generated at the Facility shall be confined to the Facility property and conducted in a manner that precludes infiltration of waste constituents into soils in a mass or concentration that will violate Groundwater Limitations V.B. In addition, the storage of residual sludge, solid waste, and biosolids on Facility property shall be temporary and controlled, and contained in a manner that minimizes leachate formation and precludes infiltration of waste constituents into soils in a mass or concentration that will violate Groundwater Limitations V.B.

iv. The use and disposal of biosolids shall comply with existing Federal and State laws and regulations, including permitting requirements and technical standards included in 40 CFR 503. If the State Water Board and the Regional Water Board are given the authority to implement regulations contained in 40 CFR 503, this Order may be reopened to incorporate appropriate time schedules and technical standards. The Discharger must comply with the standards and time schedules contained in 40 CFR 503 whether or not they have been incorporated into this Order.

b. **Biosolids Disposal Requirements**

i. The Discharger shall comply with the Monitoring and Reporting Program for biosolids disposal contained in Attachment E.

TENTATIVE ORDER

ii. Any proposed change in biosolids use or disposal practice from a previously approved practice shall be reported to the Executive Officer and U.S. EPA Regional Administrator at least **90 days** in advance of the change.

iii. The Discharger is encouraged to comply with the "Manual of Good Practice for Agricultural Land Application of Biosolids" developed by the California Water Environment Association.

c. **Biosolids Storage Requirements**

i. Facilities for the storage of Class B biosolids shall be located, designed and maintained to restrict public access to biosolids.

ii. Biosolids storage facilities shall be designed and maintained to prevent washout or inundation from a storm or flood with a return frequency of 100 years.

iii. Biosolids storage facilities, which contain biosolids, shall be designed and maintained to contain all storm water falling on the biosolids storage area during a rainfall year with a return frequency of 100 years.

iv. Biosolids storage facilities shall be designed, maintained and operated to minimize the generation of leachate.

**d. Collection System.** On 2 May 2006, the State Water Board adopted State Water Board Order 2006-0003, a Statewide General WDR for Sanitary Sewer Systems. The Discharger shall be subject to the requirements of Order 2006-0003 and any future revisions thereto. Order 2006-0003 requires that all public agencies that currently own or operate sanitary sewer systems apply for coverage under the General WDR. The Discharger has applied for and has been approved for coverage under State Water Board Order 2006-0003 for operation of its wastewater collection system.

Regardless of the coverage obtained under Order 2006-0003, the Discharger's collection system is part of the treatment system that is subject to this Order. As such, pursuant to federal regulations, the Discharger must properly operate and maintain its collection system [40 CFR section 122.41(e)], report any non-compliance [40 CFR section 122.41(l)(6) and (7)], and mitigate any discharge from the collection system in violation of this Order [40 CFR. section 122.41(d)].

**6. Other Special Provisions**

a. Wastewater shall be oxidized, coagulated, filtered, and adequately disinfected pursuant to the DPH reclamation criteria, California Code of Regulations, Title 22, Division 4, Chapter 3, (Title 22), or equivalent.

TENTATIVE ORDER

b. In the event of any change in control or ownership of land or waste discharge facilities presently owned or controlled by the Discharger, the Discharger shall notify the succeeding owner or operator of the existence of this Order by letter, a copy of which shall be immediately forwarded to the Regional Water Board.

To assume operation under this Order, the succeeding owner or operator must apply in writing to the Executive Officer requesting transfer of the Order. The request must contain the requesting entity's full legal name, the State of incorporation if a corporation, address and telephone number of the persons responsible for contact with the Regional Water Board and a statement. The statement shall comply with the signatory and certification requirements in the Federal Standard Provisions (Attachment D, Section V.B.) and state that the new owner or operator assumes full responsibility for compliance with this Order. Failure to submit the request shall be considered a discharge without requirements, a violation of the California Water Code. Transfer shall be approved or disapproved in writing by the Executive Officer.

**7. Compliance Schedules – Not Applicable**

## VII. COMPLIANCE DETERMINATION

Compliance with the effluent limitations contained in section IV of this Order will be determined as specified below:

A. **BOD and TSS Effluent Limitations**. Compliance with the final effluent limitations for BOD and TSS required in Section IV.A.1.a shall be ascertained by 24-hour composite samples. Compliance with effluent limitations IV.A.1.b for percent removal shall be calculated using the arithmetic mean of 20°C BOD (5-day) and total suspended solids in effluent samples collected over a monthly period as a percentage of the arithmetic mean of the values for influent samples collected at approximately the same times during the same period.

B. **Aluminum Effluent Limitations (Sections IV.A.1, and 2)**. Compliance with the final effluent limitations for aluminum can be demonstrated using either total or acid-soluble (inductively coupled plasma/atomic emission spectrometry or inductively coupled plasma/mass spectrometry) analysis methods, as supported by US EPA's Ambient Water Quality Criteria for Aluminum document (EPA 440/5-86-008), or other standard methods that exclude aluminum silicate particles as approved by the Executive Officer.

C. **Total Mercury Mass Loading Effluent Limitations.** The procedures for calculating mass loadings are as follows:

1. The total pollutant mass load for each individual calendar month shall be determined using an average of all concentration data collected that month and the corresponding total monthly flow. All monitoring data collected under the monitoring and reporting program, pretreatment program and any special studies shall be used for these calculations.

TENTATIVE ORDER

2. In calculating compliance, the Discharger shall count all non-detect measures at one-half of the detection level. If compliance with the effluent limitation is not attained due to the non-detect contribution, the Discharger shall improve and implement available analytical capabilities and compliance shall be evaluated with consideration of the detection limits.

D. **Average Dry Weather Flow Effluent Limitations**. The Average Dry Weather Flow represents the daily average flow when groundwater is at or near normal and runoff is not occurring. Compliance with the average dry weather flow effluent limitations will be determined annually based on the average daily flow over three consecutive dry weather months (e.g., July, August, and September).

E. **Total Coliform Organisms Effluent Limitations (Section IV.A.1.h.)**. For each day that an effluent sample is collected and analyzed for total coliform organisms, the 7-day median shall be determined by calculating the median concentration of total coliform bacteria in the effluent utilizing the bacteriological results of the last seven days for which analyses have been completed. If the 7-day median of total coliform organisms exceeds a most probable number (MPN) of 2.2 per 100 milliliters, the Discharger will be considered out of compliance for that parameter for that 1 day only within the reporting period.

F. **Mass Effluent Limitations.** Compliance with the mass effluent limitations will only be determine during average dry weather periods when groundwater is at or near normal and runoff is not occurring.

G. **Total Residual Chlorine Effluent Limitations.** Continuous monitoring analyzers for chlorine residual or for dechlorination agent residual in the effluent are appropriate methods for compliance determination. A positive residual dechlorination agent in the effluent indicates that chlorine is not present in the discharge, which demonstrates compliance with the effluent limitations. This type of monitoring can also be used to prove that some chlorine residual exceedances are false positives.

Continuous monitoring data showing either a positive dechlorination agent residual or a chlorine residual at or below the prescribed limit are sufficient to show compliance with the total residual chlorine effluent limitations, as long as the instruments are maintained and calibrated in accordance with the manufacturer's recommendations.

Any excursion above the 1-hour average or 4-day average total residual chlorine effluent limitations is a violation. If the Discharger conducts continuous monitoring and the Discharger can demonstrate, through data collected from a back-up monitoring system, that a chlorine spike recorded by the continuous monitor was not actually due to chlorine, then any excursion resulting from the recorded spike will not be considered an exceedance, but rather reported as a false positive.

TENTATIVE ORDER

## ATTACHMENT A – DEFINITIONS

**Arithmetic Mean (μ),** also called the average, is the sum of measured values divided by the number of samples. For ambient water concentrations, the arithmetic mean is calculated as follows:

Arithmetic mean = $\mu = \Sigma x / n$ where: $\Sigma x$ is the sum of the measured ambient water concentrations, and n is the number of samples.

**Average Monthly Effluent Limitation (AMEL):** the highest allowable average of daily discharges over a calendar month, calculated as the sum of all daily discharges measured during a calendar month divided by the number of daily discharges measured during that month.

**Average Weekly Effluent Limitation (AWEL):** the highest allowable average of daily discharges over a calendar week (Sunday through Saturday), calculated as the sum of all daily discharges measured during a calendar week divided by the number of daily discharges measured during that week.

**Best Practicable Treatment or Control (BPTC):** BPTC is a requirement of State Water Resources Control Board Resolution 68-16 – "Statement of Policy with Respect to Maintaining High Quality of Waters in California" (referred to as the "Antidegradation Policy"). BPTC is the treatment or control of a discharge necessary to assure that, *"(a) a pollution or nuisance will not occur and (b) the highest water quality consistent with maximum benefit to the people of the State will be maintained."* Pollution is defined in CWC Section 13050(l). In general, an exceedance of a water quality objective in the Basin Plan constitutes "pollution".

**Bioaccumulative** pollutants are those substances taken up by an organism from its surrounding medium through gill membranes, epithelial tissue, or from food and subsequently concentrated and retained in the body of the organism.

**Carcinogenic** pollutants are substances that are known to cause cancer in living organisms.

**Coefficient of Variation (*CV*)** is a measure of the data variability and is calculated as the estimated standard deviation divided by the arithmetic mean of the observed values.

**Daily Discharge:** Daily Discharge is defined as either: (1) the total mass of the constituent discharged over the calendar day (12:00 am through 11:59 pm) or any 24-hour period that reasonably represents a calendar day for purposes of sampling (as specified in the permit), for a constituent with limitations expressed in units of mass or; (2) the unweighted arithmetic mean measurement of the constituent over the day for a constituent with limitations expressed in other units of measurement (e.g., concentration).

The daily discharge may be determined by the analytical results of a composite sample taken over the course of one day (a calendar day or other 24-hour period defined as a day) or by the

TENTATIVE ORDER

arithmetic mean of analytical results from one or more grab samples taken over the course of the day.

For composite sampling, if 1 day is defined as a 24-hour period other than a calendar day, the analytical result for the 24-hour period will be considered as the result for the calendar day in which the 24-hour period ends.

**Detected, but Not Quantified (DNQ)** are those sample results less than the RL, but greater than or equal to the laboratory's MDL.

**Dilution Credit** is the amount of dilution granted to a discharge in the calculation of a water quality-based effluent limitation, based on the allowance of a specified mixing zone. It is calculated from the dilution ratio or determined through conducting a mixing zone study or modeling of the discharge and receiving water.

**Effluent Concentration Allowance (ECA)** is a value derived from the water quality criterion/objective, dilution credit, and ambient background concentration that is used, in conjunction with the coefficient of variation for the effluent monitoring data, to calculate a long-term average (LTA) discharge concentration. The ECA has the same meaning as waste load allocation (WLA) as used in U.S. EPA guidance (Technical Support Document For Water Quality-based Toxics Control, March 1991, second printing, EPA/505/2-90-001).

**Enclosed Bays** means indentations along the coast that enclose an area of oceanic water within distinct headlands or harbor works. Enclosed bays include all bays where the narrowest distance between the headlands or outermost harbor works is less than 75 percent of the greatest dimension of the enclosed portion of the bay. Enclosed bays include, but are not limited to, Humboldt Bay, Bodega Harbor, Tomales Bay, Drake's Estero, San Francisco Bay, Morro Bay, Los Angeles-Long Beach Harbor, Upper and Lower Newport Bay, Mission Bay, and San Diego Bay. Enclosed bays do not include inland surface waters or ocean waters.

**Estimated Chemical Concentration** is the estimated chemical concentration that results from the confirmed detection of the substance by the analytical method below the ML value.

**Estuaries** means waters, including coastal lagoons, located at the mouths of streams that serve as areas of mixing for fresh and ocean waters. Coastal lagoons and mouths of streams that are temporarily separated from the ocean by sandbars shall be considered estuaries. Estuarine waters shall be considered to extend from a bay or the open ocean to a point upstream where there is no significant mixing of fresh water and seawater. Estuarine waters include~~d~~, but are not limited to, the Sacramento-San Joaquin Delta, as defined in Water Code section 12220, Suisun Bay, Carquinez Strait downstream to the Carquinez Bridge, and appropriate areas of the Smith, Mad, Eel, Noyo, Russian, Klamath, San Diego, and Otay rivers. Estuaries do not include inland surface waters or ocean waters.

**Inland Surface Waters** are all surface waters of the State that do not include the ocean, enclosed bays, or estuaries.

TENTATIVE ORDER

**Instantaneous Maximum Effluent Limitation:** the highest allowable value for any single grab sample or aliquot (i.e., each grab sample or aliquot is independently compared to the instantaneous maximum limitation).

**Instantaneous Minimum Effluent Limitation:** the lowest allowable value for any single grab sample or aliquot (i.e., each grab sample or aliquot is independently compared to the instantaneous minimum limitation).

**Maximum Daily Effluent Limitation (MDEL)** means the highest allowable daily discharge of a pollutant, over a calendar day (or 24-hour period). For pollutants with limitations expressed in units of mass, the daily discharge is calculated as the total mass of the pollutant discharged over the day. For pollutants with limitations expressed in other units of measurement, the daily discharge is calculated as the arithmetic mean measurement of the pollutant over the day.

**Median** is the middle measurement in a set of data. The median of a set of data is found by first arranging the measurements in order of magnitude (either increasing or decreasing order). If the number of measurements ($n$) is odd, then the median = $X_{(n+1)/2}$. If $n$ is even, then the median = $(X_{n/2} + X_{(n/2)+1})/2$ (i.e., the midpoint between the $n/2$ and $n/2+1$).

**Method Detection Limit (MDL)** is the minimum concentration of a substance that can be measured and reported with 99 percent confidence that the analyte concentration is greater than zero, as defined in title 40 of the Code of Federal Regulations, Part 136, Attachment B, revised as of July 3, 1999.

**Minimum Level (ML)** is the concentration at which the entire analytical system must give a recognizable signal and acceptable calibration point. The ML is the concentration in a sample that is equivalent to the concentration of the lowest calibration standard analyzed by a specific analytical procedure, assuming that all the method specified sample weights, volumes, and processing steps have been followed.

**Mixing Zone** is a limited volume of receiving water that is allocated for mixing with a wastewater discharge where water quality criteria can be exceeded without causing adverse effects to the overall water body.

**Not Detected (ND)** are those sample results less than the laboratory's MDL.

**Ocean Waters** are the territorial marine waters of the State as defined by California law to the extent these waters are outside of enclosed bays, estuaries, and coastal lagoons. Discharges to ocean waters are regulated in accordance with the State Water Board's California Ocean Plan.

**Persistent** pollutants are substances for which degradation or decomposition in the environment is nonexistent or very slow.

**Pollutant Minimization Program (PMP)** means waste minimization and pollution prevention actions that include, but are not limited to, product substitution, waste stream recycling, alternative waste management methods, and education of the public and businesses. The

TENTATIVE ORDER

goal of the PMP shall be to reduce all potential sources of a priority pollutant(s) through pollutant minimization (control) strategies, including pollution prevention measures as appropriate, to maintain the effluent concentration at or below the water quality-based effluent limitation. Pollution prevention measures may be particularly appropriate for persistent bioaccumulative priority pollutants where there is evidence that beneficial uses are being impacted. The Regional Water Board may consider cost effectiveness when establishing the requirements of a PMP. The completion and implementation of a Pollution Prevention Plan, if required pursuant to Water Code section 13263.3(d), shall be considered to fulfill the PMP requirements.

**Pollution Prevention** means any action that causes a net reduction in the use or generation of a hazardous substance or other pollutant that is discharged into water and includes, but is not limited to, input change, operational improvement, production process change, and product reformulation (as defined in Water Code section 13263.3). Pollution prevention does not include actions that merely shift a pollutant in wastewater from one environmental medium to another environmental medium, unless clear environmental benefits of such an approach are identified to the satisfaction of the State or Regional Water Board.

**Reporting Level (RL)** is the ML (and its associated analytical method) chosen by the Discharger for reporting and compliance determination from the MLs included in this Order. The MLs included in this Order correspond to approved analytical methods for reporting a sample result that are selected by the Regional Water Board either from Appendix 4 of the SIP in accordance with section 2.4.2 of the SIP or established in accordance with section 2.4.3 of the SIP. The ML is based on the proper application of method-based analytical procedures for sample preparation and the absence of any matrix interferences. Other factors may be applied to the ML depending on the specific sample preparation steps employed. For example, the treatment typically applied in cases where there are matrix-effects is to dilute the sample or sample aliquot by a factor of ten. In such cases, this additional factor must be applied to the ML in the computation of the RL.

**Satellite Collection System** is the portion, if any, of a sanitary sewer system owned or operated by a different public agency than the agency that owns and operates the wastewater treatment facility that a sanitary sewer system is tributary to.

**Source of Drinking Water** is any water designated as municipal or domestic supply (MUN) in a Regional Water Board Basin Plan.

**Standard Deviation ($\sigma$)** is a measure of variability that is calculated as follows:

$$\sigma = \left(\sum[(x - \mu)^2]/(n - 1)\right)^{0.5}$$

where:

$x$ is the observed value;
$\mu$ is the arithmetic mean of the observed values; and
$n$ is the number of samples.

**Toxicity Reduction Evaluation (TRE)** is a study conducted in a step-wise process designed to identify the causative agents of effluent or ambient toxicity, isolate the sources of toxicity,

TENTATIVE ORDER

evaluate the effectiveness of toxicity control options, and then confirm the reduction in toxicity. The first steps of the TRE consist of the collection of data relevant to the toxicity, including additional toxicity testing, and an evaluation of facility operations and maintenance practices, and best management practices. A Toxicity Identification Evaluation (TIE) may be required as part of the TRE, if appropriate. (A TIE is a set of procedures to identify the specific chemical(s) responsible for toxicity. These procedures are performed in three phases (characterization, identification, and confirmation) using aquatic organism toxicity tests.)

TENTATIVE ORDER

## ATTACHMENT B – MAP

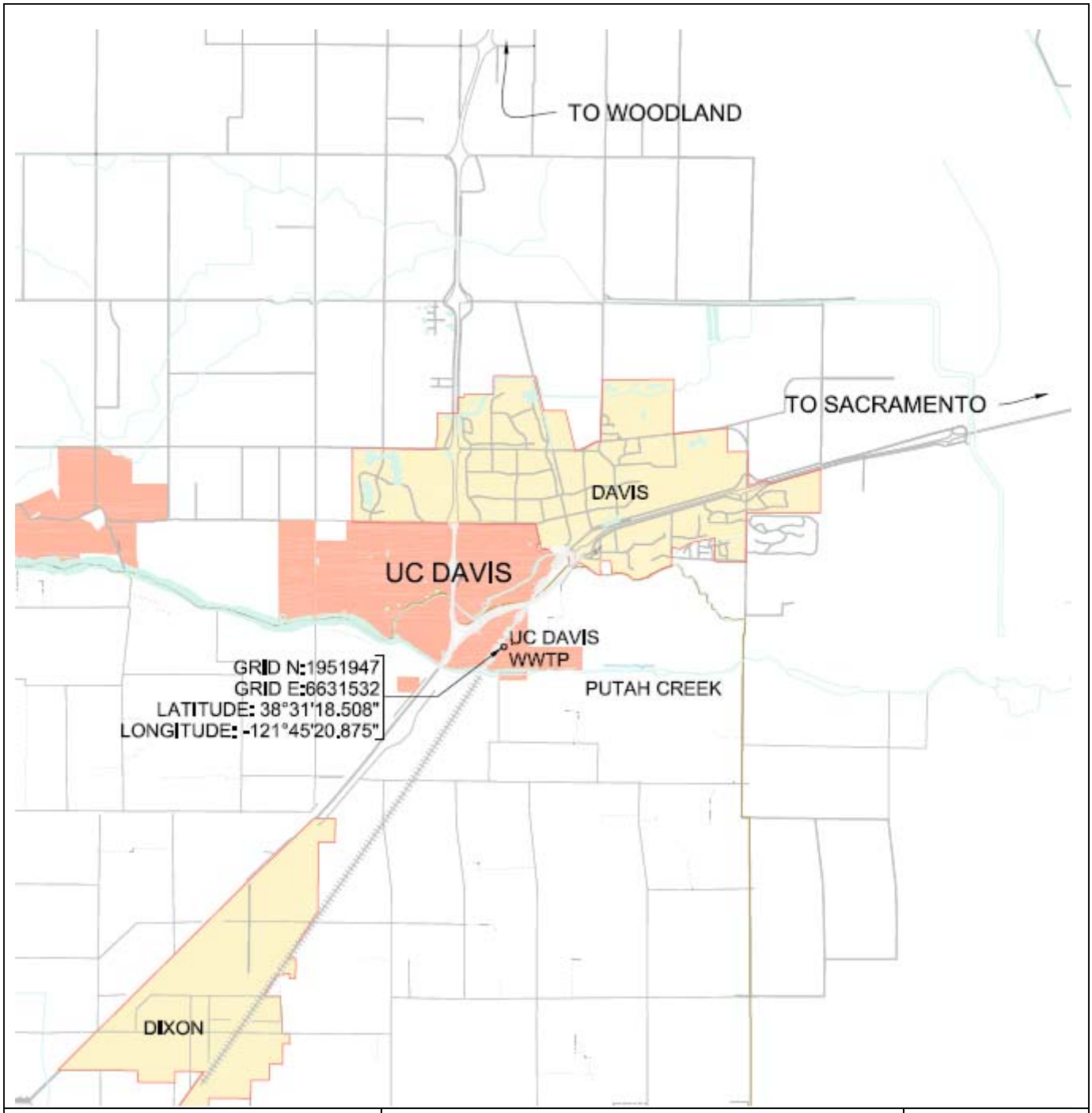


| | | |
|---|---|---|
| Drawing Reference:<br>*UNIVERSITY OF CALIFORNIA DAVIS GIS DEPARTMENT*<br><br>*Not to scale* | SITE LOCATION MAP<br><br>UNIVERSITY OF CALIFORNIA DAVIS<br>MAIN WASTEWATER TREATMENT PLANT<br>SOLANO & YOLO COUNTIES | N<br>W E<br>S |

T E N T A T I V E O R D E R

## ATTACHMENT C – FLOW SCHEMATIC

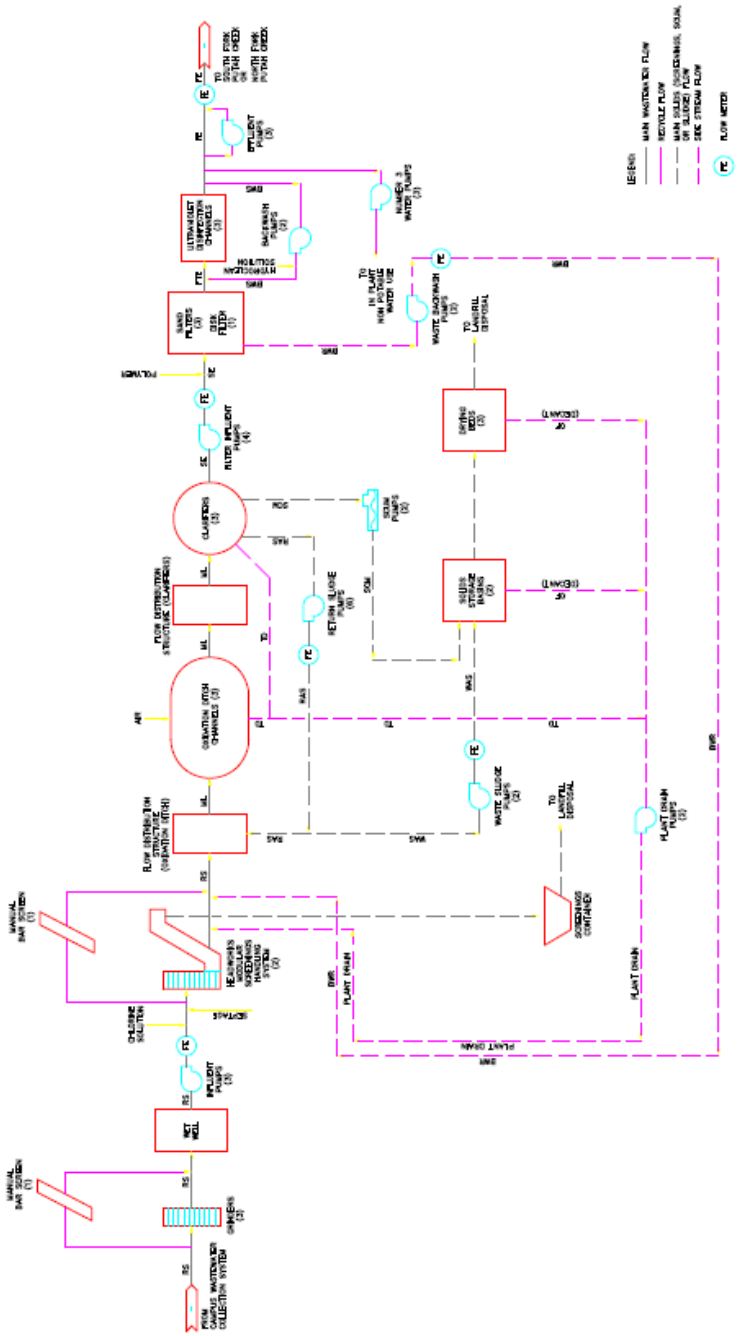

T E N T A T I V E O R D E R

# ATTACHMENT D –STANDARD PROVISIONS

## I. STANDARD PROVISIONS – PERMIT COMPLIANCE

### A. Duty to Comply

1. The Discharger must comply with all of the conditions of this Order. Any noncompliance constitutes a violation of the Clean Water Act (CWA) and the California Water Code and is grounds for enforcement action, for permit termination, revocation and reissuance, or modification; or denial of a permit renewal application. (40 C.F.R. § 122.41(a).)

2. The Discharger shall comply with effluent standards or prohibitions established under Section 307(a) of the CWA for toxic pollutants and with standards for sewage sludge use or disposal established under Section 405(d) of the CWA within the time provided in the regulations that establish these standards or prohibitions, even if this Order has not yet been modified to incorporate the requirement. (40 C.F.R. § 122.41(a)(1).)

### B. Need to Halt or Reduce Activity Not a Defense

It shall not be a defense for a Discharger in an enforcement action that it would have been necessary to halt or reduce the permitted activity in order to maintain compliance with the conditions of this Order. (40 C.F.R. § 122.41(c).)

### C. Duty to Mitigate

The Discharger shall take all reasonable steps to minimize or prevent any discharge or sludge use or disposal in violation of this Order that has a reasonable likelihood of adversely affecting human health or the environment. (40 C.F.R. § 122.41(d).)

### D. Proper Operation and Maintenance

The Discharger shall at all times properly operate and maintain all facilities and systems of treatment and control (and related appurtenances) which are installed or used by the Discharger to achieve compliance with the conditions of this Order. Proper operation and maintenance also includes adequate laboratory controls and appropriate quality assurance procedures. This provision requires the operation of backup or auxiliary facilities or similar systems that are installed by a Discharger only when necessary to achieve compliance with the conditions of this Order. (40 C.F.R. § 122.41(e).)

### E. Property Rights

1. This Order does not convey any property rights of any sort or any exclusive privileges. (40 C.F.R. § 122.41(g).)

TENTATIVE ORDER

2. The issuance of this Order does not authorize any injury to persons or property or invasion of other private rights, or any infringement of state or local law or regulations. (40 C.F.R. § 122.5(c).)

## F. Inspection and Entry

The Discharger shall allow the Regional Water Board, State Water Board, United States Environmental Protection Agency (USEPA), and/or their authorized representatives (including an authorized contractor acting as their representative), upon the presentation of credentials and other documents, as may be required by law, to (40 C.F.R. § 122.41(i); Wat. Code, § 13383):

1. Enter upon the Discharger's premises where a regulated facility or activity is located or conducted, or where records are kept under the conditions of this Order (40 C.F.R. § 122.41(i)(1));

2. Have access to and copy, at reasonable times, any records that must be kept under the conditions of this Order (40 C.F.R. § 122.41(i)(2));

3. Inspect and photograph, at reasonable times, any facilities, equipment (including monitoring and control equipment), practices, or operations regulated or required under this Order (40 C.F.R. § 122.41(i)(3)); and

4. Sample or monitor, at reasonable times, for the purposes of assuring Order compliance or as otherwise authorized by the CWA or the Water Code, any substances or parameters at any location. (40 C.F.R. § 122.41(i)(4).)

## G. Bypass

1. Definitions

   a. “Bypass” means the intentional diversion of waste streams from any portion of a treatment facility. (40 C.F.R. § 122.41(m)(1)(i).)

   b. “Severe property damage” means substantial physical damage to property, damage to the treatment facilities, which causes them to become inoperable, or substantial and permanent loss of natural resources that can reasonably be expected to occur in the absence of a bypass. Severe property damage does not mean economic loss caused by delays in production. (40 C.F.R. § 122.41(m)(1)(ii).)

2. Bypass not exceeding limitations. The Discharger may allow any bypass to occur which does not cause exceedances of effluent limitations, but only if it is for essential maintenance to assure efficient operation. These bypasses are not subject to the provisions listed in Standard Provisions – Permit Compliance I.G.3, I.G.4, and I.G.5 below. (40 C.F.R. § 122.41(m)(2).)

TENTATIVE ORDER

3. Prohibition of bypass. Bypass is prohibited, and the Regional Water Board may take enforcement action against a Discharger for bypass, unless (40 C.F.R. § 122.41(m)(4)(i)):

   a. Bypass was unavoidable to prevent loss of life, personal injury, or severe property damage (40 C.F.R. § 122.41(m)(4)(i)(A));

   b. There were no feasible alternatives to the bypass, such as the use of auxiliary treatment facilities, retention of untreated wastes, or maintenance during normal periods of equipment downtime. This condition is not satisfied if adequate back-up equipment should have been installed in the exercise of reasonable engineering judgment to prevent a bypass that occurred during normal periods of equipment downtime or preventive maintenance (40 C.F.R. § 122.41(m)(4)(i)(B)); and

   c. The Discharger submitted notice to the Regional Water Board as required under Standard Provisions – Permit Compliance I.G.5 below. (40 C.F.R. § 122.41(m)(4)(i)(C).)

4. The Regional Water Board may approve an anticipated bypass, after considering its adverse effects, if the Regional Water Board determines that it will meet the three conditions listed in Standard Provisions – Permit Compliance I.G.3 above. (40 C.F.R. § 122.41(m)(4)(ii).)

5. Notice

   a. Anticipated bypass. If the Discharger knows in advance of the need for a bypass, it shall submit a notice, if possible at least 10 days before the date of the bypass. (40 C.F.R. § 122.41(m)(3)(i).)

   b. Unanticipated bypass. The Discharger shall submit notice of an unanticipated bypass as required in Standard Provisions - Reporting V.E below (24-hour notice). (40 C.F.R. § 122.41(m)(3)(ii).)

## H. Upset

Upset means an exceptional incident in which there is unintentional and temporary noncompliance with technology based permit effluent limitations because of factors beyond the reasonable control of the Discharger. An upset does not include noncompliance to the extent caused by operational error, improperly designed treatment facilities, inadequate treatment facilities, lack of preventive maintenance, or careless or improper operation. (40 C.F.R. § 122.41(n)(1).)

1. Effect of an upset. An upset constitutes an affirmative defense to an action brought for noncompliance with such technology based permit effluent limitations if the requirements of Standard Provisions – Permit Compliance I.H.2 below are met. No determination made during administrative review of claims that noncompliance was

TENTATIVE ORDER

caused by upset, and before an action for noncompliance, is final administrative action subject to judicial review. (40 C.F.R. § 122.41(n)(2).).

2. Conditions necessary for a demonstration of upset. A Discharger who wishes to establish the affirmative defense of upset shall demonstrate, through properly signed, contemporaneous operating logs or other relevant evidence that (40 C.F.R. § 122.41(n)(3)):

   a. An upset occurred and that the Discharger can identify the cause(s) of the upset (40 C.F.R. § 122.41(n)(3)(i));

   b. The permitted facility was, at the time, being properly operated (40 C.F.R. § 122.41(n)(3)(ii));

   c. The Discharger submitted notice of the upset as required in Standard Provisions – Reporting V.E.2.b below (24-hour notice) (40 C.F.R. § 122.41(n)(3)(iii)); and

   d. The Discharger complied with any remedial measures required under Standard Provisions – Permit Compliance I.C above. (40 C.F.R. § 122.41(n)(3)(iv).)

3. Burden of proof. In any enforcement proceeding, the Discharger seeking to establish the occurrence of an upset has the burden of proof. (40 C.F.R. § 122.41(n)(4).)

## II. STANDARD PROVISIONS – PERMIT ACTION

### A. General

This Order may be modified, revoked and reissued, or terminated for cause. The filing of a request by the Discharger for modification, revocation and reissuance, or termination, or a notification of planned changes or anticipated noncompliance does not stay any Order condition. (40 C.F.R. § 122.41(f).)

### B. Duty to Reapply

If the Discharger wishes to continue an activity regulated by this Order after the expiration date of this Order, the Discharger must apply for and obtain a new permit. (40 C.F.R. § 122.41(b).)

### C. Transfers

This Order is not transferable to any person except after notice to the Regional Water Board. The Regional Water Board may require modification or revocation and reissuance of the Order to change the name of the Discharger and incorporate such other requirements as may be necessary under the CWA and the Water Code. (40 C.F.R. § 122.41(l)(3); § 122.61.)

TENTATIVE ORDER

## III. STANDARD PROVISIONS – MONITORING

**A.** Samples and measurements taken for the purpose of monitoring shall be representative of the monitored activity. (40 C.F.R. § 122.41(j)(1).)

**B.** Monitoring results must be conducted according to test procedures under Part 136 or, in the case of sludge use or disposal, approved under Part 136 unless otherwise specified in Part 503 unless other test procedures have been specified in this Order. (40 C.F.R. § 122.41(j)(4); § 122.44(i)(1)(iv).)

## IV. STANDARD PROVISIONS – RECORDS

**A.** Except for records of monitoring information required by this Order related to the Discharger's sewage sludge use and disposal activities, which shall be retained for a period of at least five years (or longer as required by Part 503), the Discharger shall retain records of all monitoring information, including all calibration and maintenance records and all original strip chart recordings for continuous monitoring instrumentation, copies of all reports required by this Order, and records of all data used to complete the application for this Order, for a period of at least three (3) years from the date of the sample, measurement, report or application. This period may be extended by request of the Regional Water Board Executive Officer at any time. (40 C.F.R. § 122.41(j)(2).)

**B. Records of monitoring information shall include:**

1. The date, exact place, and time of sampling or measurements (40 C.F.R. § 122.41(j)(3)(i));
2. The individual(s) who performed the sampling or measurements (40 C.F.R. § 122.41(j)(3)(ii));
3. The date(s) analyses were performed (40 C.F.R. § 122.41(j)(3)(iii));
4. The individual(s) who performed the analyses (40 C.F.R. § 122.41(j)(3)(iv));
5. The analytical techniques or methods used (40 C.F.R. § 122.41(j)(3)(v)); and
6. The results of such analyses. (40 C.F.R. § 122.41(j)(3)(vi).)

**C. Claims of confidentiality for the following information will be denied (40 C.F.R. § 122.7(b)):**

1. The name and address of any permit applicant or Discharger (40 C.F.R. § 122.7(b)(1)); and
2. Permit applications and attachments, permits and effluent data. (40 C.F.R. § 122.7(b)(2).)

TENTATIVE ORDER

## V. STANDARD PROVISIONS – REPORTING

### A. Duty to Provide Information

The Discharger shall furnish to the Regional Water Board, State Water Board, or USEPA within a reasonable time, any information which the Regional Water Board, State Water Board, or USEPA may request to determine whether cause exists for modifying, revoking and reissuing, or terminating this Order or to determine compliance with this Order. Upon request, the Discharger shall also furnish to the Regional Water Board, State Water Board, or USEPA copies of records required to be kept by this Order. (40 C.F.R. § 122.41(h); Wat. Code, § 13267.)

### B. Signatory and Certification Requirements

1. All applications, reports, or information submitted to the Regional Water Board, State Water Board, and/or USEPA shall be signed and certified in accordance with Standard Provisions – Reporting V.B.2, V.B.3, V.B.4, and V.B.5 below. (40 C.F.R. § 122.41(k).)

2. All permit applications shall be signed by either a principal executive officer or ranking elected official. For purposes of this provision, a principal executive officer of a federal agency includes: (i) the chief executive officer of the agency, or (ii) a senior executive officer having responsibility for the overall operations of a principal geographic unit of the agency (e.g., Regional Administrators of USEPA). (40 C.F.R. § 122.22(a)(3).).

3. All reports required by this Order and other information requested by the Regional Water Board, State Water Board, or USEPA shall be signed by a person described in Standard Provisions – Reporting V.B.2 above, or by a duly authorized representative of that person. A person is a duly authorized representative only if:

   a. The authorization is made in writing by a person described in Standard Provisions – Reporting V.B.2 above (40 C.F.R. § 122.22(b)(1));

   b. The authorization specifies either an individual or a position having responsibility for the overall operation of the regulated facility or activity such as the position of plant manager, operator of a well or a well field, superintendent, position of equivalent responsibility, or an individual or position having overall responsibility for environmental matters for the company. (A duly authorized representative may thus be either a named individual or any individual occupying a named position.) (40 C.F.R. § 122.22(b)(2)); and

   c. The written authorization is submitted to the Regional Water Board and State Water Board. (40 C.F.R. § 122.22(b)(3).)

TENTATIVE ORDER

4. If an authorization under Standard Provisions – Reporting V.B.3 above is no longer accurate because a different individual or position has responsibility for the overall operation of the facility, a new authorization satisfying the requirements of Standard Provisions – Reporting V.B.3 above must be submitted to the Regional Water Board and State Water Board prior to or together with any reports, information, or applications, to be signed by an authorized representative. (40 C.F.R. § 122.22(c).)

5. Any person signing a document under Standard Provisions – Reporting V.B.2 or V.B.3 above shall make the following certification:

   "I certify under penalty of law that this document and all attachments were prepared under my direction or supervision in accordance with a system designed to assure that qualified personnel properly gather and evaluate the information submitted. Based on my inquiry of the person or persons who manage the system or those persons directly responsible for gathering the information, the information submitted is, to the best of my knowledge and belief, true, accurate, and complete. I am aware that there are significant penalties for submitting false information, including the possibility of fine and imprisonment for knowing violations." (40 C.F.R. § 122.22(d).)

## C. Monitoring Reports

1. Monitoring results shall be reported at the intervals specified in the Monitoring and Reporting Program (Attachment E) in this Order. (40 C.F.R. § 122.22(l)(4).)

2. Monitoring results must be reported on a Discharge Monitoring Report (DMR) form or forms provided or specified by the Regional Water Board or State Water Board for reporting results of monitoring of sludge use or disposal practices. (40 C.F.R. § 122.41(l)(4)(i).)

3. If the Discharger monitors any pollutant more frequently than required by this Order using test procedures approved under Part 136 or, in the case of sludge use or disposal, approved under Part 136 unless otherwise specified in Part 503, or as specified in this Order, the results of this monitoring shall be included in the calculation and reporting of the data submitted in the DMR or sludge reporting form specified by the Regional Water Board. (40 C.F.R. § 122.41(l)(4)(ii).)

4. Calculations for all limitations, which require averaging of measurements, shall utilize an arithmetic mean unless otherwise specified in this Order. (40 C.F.R. § 122.41(l)(4)(iii).)

## D. Compliance Schedules

Reports of compliance or noncompliance with, or any progress reports on, interim and final requirements contained in any compliance schedule of this Order, shall be submitted no later than 14 days following each schedule date. (40 C.F.R. § 122.41(l)(5).)

TENTATIVE ORDER

## E. Twenty-Four Hour Reporting

1. The Discharger shall report any noncompliance that may endanger health or the environment. Any information shall be provided orally within 24 hours from the time the Discharger becomes aware of the circumstances. A written submission shall also be provided within five (5) days of the time the Discharger becomes aware of the circumstances. The written submission shall contain a description of the noncompliance and its cause; the period of noncompliance, including exact dates and times, and if the noncompliance has not been corrected, the anticipated time it is expected to continue; and steps taken or planned to reduce, eliminate, and prevent reoccurrence of the noncompliance. (40 C.F.R. § 122.41(l)(6)(i).)

2. The following shall be included as information that must be reported within 24 hours under this paragraph (40 C.F.R. § 122.41(l)(6)(ii)):

   a. Any unanticipated bypass that exceeds any effluent limitation in this Order. (40 C.F.R. § 122.41(l)(6)(ii)(A).)

   b. Any upset that exceeds any effluent limitation in this Order. (40 C.F.R. § 122.41(l)(6)(ii)(B).)

3. The Regional Water Board may waive the above-required written report under this provision on a case-by-case basis if an oral report has been received within 24 hours. (40 C.F.R. § 122.41(l)(6)(iii).)

## F. Planned Changes

The Discharger shall give notice to the Regional Water Board as soon as possible of any planned physical alterations or additions to the permitted facility. Notice is required under this provision only when (40 C.F.R. § 122.41(l)(1)):

1. The alteration or addition to a permitted facility may meet one of the criteria for determining whether a facility is a new source in section 122.29(b) (40 C.F.R. § 122.41(l)(1)(i)); or

2. The alteration or addition could significantly change the nature or increase the quantity of pollutants discharged. This notification applies to pollutants that are subject neither to effluent limitations in this Order nor to notification requirements under section 122.42(a)(1) (see Additional Provisions—Notification Levels VII.A.1). (40 C.F.R. § 122.41(l)(1)(ii).)

3. The alteration or addition results in a significant change in the Discharger's sludge use or disposal practices, and such alteration, addition, or change may justify the application of permit conditions that are different from or absent in the existing permit, including notification of additional use or disposal sites not reported during the permit application process or not reported pursuant to an approved land application plan. (40 C.F.R.§ 122.41(l)(1)(iii).)

TENTATIVE ORDER

### G. Anticipated Noncompliance

The Discharger shall give advance notice to the Regional Water Board or State Water Board of any planned changes in the permitted facility or activity that may result in noncompliance with General Order requirements. (40 C.F.R. § 122.41(l)(2).)

### H. Other Noncompliance

The Discharger shall report all instances of noncompliance not reported under Standard Provisions – Reporting V.C, V.D, and V.E above at the time monitoring reports are submitted. The reports shall contain the information listed in Standard Provision – Reporting V.E above. (40 C.F.R. § 122.41(l)(7).)

### I. Other Information

When the Discharger becomes aware that it failed to submit any relevant facts in a permit application, or submitted incorrect information in a permit application or in any report to the Regional Water Board, State Water Board, or USEPA, the Discharger shall promptly submit such facts or information. (40 C.F.R. § 122.41(l)(8).)

## VI. STANDARD PROVISIONS – ENFORCEMENT

**A.** The Regional Water Board is authorized to enforce the terms of this permit under several provisions of the Water Code, including, but not limited to, sections 13385, 13386, and 13387.

## VII. ADDITIONAL PROVISIONS – NOTIFICATION LEVELS

### A. Publicly-Owned Treatment Works (POTWs)

All POTWs shall provide adequate notice to the Regional Water Board of the following (40 C.F.R. § 122.42(b)):

1. Any new introduction of pollutants into the POTW from an indirect discharger that would be subject to sections 301 or 306 of the CWA if it were directly discharging those pollutants (40 C.F.R. § 122.42(b)(1)); and

2. Any substantial change in the volume or character of pollutants being introduced into that POTW by a source introducing pollutants into the POTW at the time of adoption of the Order. (40 C.F.R. § 122.42(b)(2).)

3. Adequate notice shall include information on the quality and quantity of effluent introduced into the POTW as well as any anticipated impact of the change on the quantity or quality of effluent to be discharged from the POTW. (40 C.F.R. § 122.42(b)(3).)

TENTATIVE ORDER

## ATTACHMENT E – MONITORING AND REPORTING PROGRAM

### Table of Contents


I. General Monitoring Provisions ..... E-1
II. Monitoring Locations ..... E-1
III. Influent Monitoring Requirements ..... E-2
  A. Monitoring Location Monitoring Location INF-001 ..... E-2
IV. Effluent Monitoring Requirements ..... E-3
  A. Monitoring Locations EFF-001 and EFF-002 ..... E-3
V. Whole Effluent Toxicity Testing Requirements ..... E-5
VI. Land Discharge Monitoring Requirements – NOT APPLICABLE ..... E-7
VII. Reclamation Monitoring Requirements – NOT APPLICABLE ..... E-8
VIII. Receiving Water Monitoring Requirements – Surface Water and Groundwater ..... E-8
  A. Surface Water Monitoring Locations RSW-001U, RSW-001D, RSW-002U, and RSW-002D ..... E-8
  B. Groundwater Monitoring Program ..... E-10
IX. Other Monitoring Requirements ..... E-11
  A. Biosolids ..... E-11
  B. Municipal Water Supply ..... E-11
  C. Ultraviolet Disinfection (UV) System ..... E-12
X. Reporting Requirements ..... E-12
  A. General Monitoring and Reporting Requirements ..... E-12
  B. Self Monitoring Reports (SMRs) ..... E-14
  C. Discharge Monitoring Reports (DMRs) ..... E-16
  D. Other Reports ..... E-16


### List of Tables


Table E-1. Monitoring Station Locations ..... E-2
Table E-2. Influent Monitoring ..... E-2
Table E-3. Effluent Monitoring ..... E-3
Table E-4. Chronic Toxicity Testing Dilution Series ..... E-6
Table E-5. Receiving Water Monitoring Requirements for RSW-001U and RSW-001D ..... E-8
Table E-6. Receiving Water Monitoring Requirements for RSW-002U and RSW-002D ..... E-9
Table E-7. Groundwater Monitoring Requirements ..... E-10
Table E-8. Municipal Water Supply Monitoring Requirements ..... E-12
Table E-9. Ultraviolet Disinfection System Monitoring Requirements ..... E-12
Table E-10. Monitoring Periods and Reporting Schedule ..... E-15
Table E-11. Reporting Requirements for Special Provisions Progress Reports ..... E-17


TENTATIVE ORDER

## ATTACHMENT E – MONITORING AND REPORTING PROGRAM (MRP)

The Code of Federal Regulations section 122.48 requires that all NPDES permits specify monitoring and reporting requirements. Water Code Sections 13267 and 13383 also authorize the Regional Water Quality Control Board (Regional Water Board) to require technical and monitoring reports. This MRP establishes monitoring and reporting requirements, which implement the federal and state regulations.

TENTATIVE ORDER

### I. GENERAL MONITORING PROVISIONS

A. Samples and measurements taken as required herein shall be representative of the volume and nature of the monitored discharge. All samples shall be taken at the monitoring locations specified below and, unless otherwise specified, before the monitored flow joins or is diluted by any other waste stream, body of water, or substance. Monitoring locations shall not be changed without notification to and the approval of this Regional Water Board.

B. Chemical, bacteriological, and bioassay analyses shall be conducted at a laboratory certified for such analyses by the State Department of Public Health. In the event a certified laboratory is not available to the Discharger, analyses performed by a non-certified laboratory will be accepted provided a Quality Assurance-Quality Control Program is instituted by the laboratory. A manual containing the steps followed in this program must be kept in the laboratory and shall be available for inspection by Regional Water Board staff. The Quality Assurance-Quality Control Program must conform to USEPA guidelines or to procedures approved by the Regional Water Board.

C. All analyses shall be performed in a laboratory certified to perform such analyses by the California Department of Public Health. Laboratories that perform sample analyses shall be identified in all monitoring reports.

D. Appropriate flow measurement devices and methods consistent with accepted scientific practices shall be selected and used to ensure the accuracy and reliability of measurements of the volume of monitored discharges. All monitoring instruments and devices used by the Discharger to fulfill the prescribed monitoring program shall be properly maintained and calibrated as necessary to ensure their continued accuracy. All flow measurement devices shall be calibrated at least once per year to ensure continued accuracy of the devices.

E. Monitoring results, including noncompliance, shall be reported at intervals and in a manner specified in this Monitoring and Reporting Program.

### II. MONITORING LOCATIONS

The Discharger shall establish the following monitoring locations to demonstrate compliance with the effluent limitations, discharge specifications, and other requirements in this Order:

**Table E-1. Monitoring Station Locations**

| Discharge Point Name | Monitoring Location Name | Monitoring Location Description (includes Latitude and Longitude when available) |
|---|---|---|
| -- | INF-001 | **Location where a representative sample of the facility's influent can be obtained, prior to any additives, treatment processes, and plant return flows.** |
| 001 & 002 | EFF-001 | Effluent Wet Well (38° 31' 22.2" N, Latitude; 121° 45' 21.6" W, Longitude) |
| -- | RSW-001U | Upstream of Discharge Point No. 001 (38° 31' 02.9" N, Latitude; 121° 45' 39.4" W, Longitude) |
| -- | RSW-001D | Downstream of Discharge Point No. 001 (38° 31' 01.6" N, Latitude; 121° 45' 23.4" W, Longitude) |
| -- | RSW-002U | At least 50 feet and within 200 feet downstream of Discharge Point No. 002 |
| -- | RSW-002D | 200 feet upstream of Discharge Point No. 2 |
| -- | RGW-001 | Upgradient of Solids Storage Basins No. 1 & No. 2 38° 31' 18.7" N, Latitude; 121° 45' 15.5" W, Longitude |
| -- | RGW-002 | Downgradient of Solids Storage Basin No. 2 38° 31' 24.4" N, Latitude; 121° 45' 09.9" W, Longitude |
| -- | RGW-003 | Downgradient of Solids Storage Basin No. 1 38° 31' 21.5" N, Latitude; 121° 45' 09.9" W, Longitude |
| -- | BIO-001 | Representative sample location for biosolids. |
| -- | SPL-001 | A location where a representative sample location for the municipal water supply can be collected. If the water supply is from more than source, a weighted average should be calculated. |

## III. INFLUENT MONITORING REQUIREMENTS

### A. Monitoring Location Monitoring Location INF-001

1. The Discharger shall monitor influent to the facility at INF-001 as follows:

**Table E-2. Influent Monitoring**

| Parameter | Units | Sample Type | Minimum Sampling Frequency | Required Analytical Test Method |
|---|---|---|---|---|
| Flow | mgd | Meter | Continuous | [2] |
| pH | SU | Grab[1] | Daily | [2] |
| Biochemical Oxygen Demand ($BOD_5$) 5-day @ 20°C | mg/L | 24-hr Composite[3] | 3 days/week | [2] |
| Total Suspended Solids | mg/L | 24-hr Composite[3] | 3 days/week | [2] |
| Electrical Conductivity @ 25°C | µmhos/cm | Grab[1] | Weekly | [2] |

TENTATIVE ORDER

[1] Grab samples shall not be collected at the same time each day.
[2] As required by 40 CFR Part 136
[3] 24-hour flow proportional composite.

## IV. EFFLUENT MONITORING REQUIREMENTS

### A. Monitoring Location EFF-001

1. The Discharger shall monitor tertiary treated effluent at EFF-001 as follows. If more than one analytical test method is listed for a given parameter, the Discharger must select from the listed methods and corresponding Minimum Level:

**Table E-3. Effluent Monitoring**

| Parameter | Units | Sample Type | Minimum Sampling Frequency | Required Analytical Test Method and (Minimum Level, units), respectively |
|---|---|---|---|---|
| Flow | mgd | Meter | Continuous | -- |
| Total Residual Chlorine[1] | mg/L | Grab[15] | Daily | [16] |
| Temperature[2] | °F | Grab[15] | Daily | |
| pH[9] | Standard Unites | Grab[15] | Daily | [16] |
| Biochemical Oxygen Demand ($BOD_5$) 5-day @ 20°C | mg/L | 24-hr Composite[8] | 3 times/week | [16] |
| Total Suspended Solids (TSS) | mg/L | 24-hr Composite[8] | 3 times/week | [16] |
| Ammonia (as N) [3, 4, 9] | mg/L | Grab[15] | 3 times/week | [16] |
| Total Coliform Organisms | MPN/100 mL | Grab[15] | 5 times/week | [16] |
| Electrical Conductivity @ 25°C | µmhos/cm | Grab[15] | Weekly | [16] |
| Nitrate + Nitrite (as N) | mg/L | Grab[15] | Monthly | [16] |
| Total Dissolved Solids | mg/L | Grab[15] | Monthly | [16] |
| Aluminum[5] | µg/L | 24-hr composite[8] | Monthly | [16] |
| Hardness | mg/L | Grab[15] | Monthly | [16] |
| Copper, Total Recoverable[9] | µg/L | 24-hour Composite | Monthly | [16] |
| Cyanide, total recoverable[9] | µg/L | Grab[15] | Monthly | [16] |
| Selenium, Total Recoverable[5,14] | µg/L | 24-hour Composite[8] | Monthly | [16] |
| Mercury, Total | ng/L | Grab[15] | Monthly | EPA Method 1631[12] |
| Mercury, Methyl | ng/L | Grab[15] | Monthly | EPA Method 1630[12] |
| Phosphorus | mg/L | Grab[15] | Quarterly | [16] |
| Acute Bioassay[10] | % Survival | Grab[15] | Quarterly | |
| Chronic Bioassay | % Survival | 24-hour Composite | Quarterly | |

TENTATIVE ORDER

| | | | | |
|---|---|---|---|---|
| Standard Minerals[13] | mg/L | Grab[15] | Yearly | [16] |
| Priority Pollutants and other Constituents of Concern[5, 6, 7,9] | µg/L | Grab[15] | [11] | [16] |

[1] Total chlorine residual must be monitored with a method sensitive to and accurate at the permitted level of 0.01 mg/L. Monitoring for chlorine residual is only required when the Facility is using chlorine for maintenance purposes. If chlorine is scheduled to be used, the Discharger shall monitor chlorine residual one week prior to use and one week after the end of use.

[2] Effluent Temperature monitoring shall be at the Outfall locations.

[3] Concurrent with effluent toxicity monitoring.

[4] Report as total recoverable concentration.

[5] For priority pollutant constituents with effluent limitations, detection limits shall be below the effluent limitations. If the lowest minimum level (ML) published in Appendix 4 of the Policy for Implementation of Toxics Standards for Inland Surface Waters, Enclosed Bays, and Estuaries of California (State Implementation Plan or SIP) is not below the effluent limitation, the detection limit shall be the lowest ML. For priority pollutant constituents without effluent limitations, the detection limits shall be equal to or less than the lowest ML published in Appendix 4 of the SIP.

[6] Priority Pollutants is defined as US EPA Priority Pollutants and consists of the constituents listed in the most recent National Toxics Rule and California Toxics Rule and constituents identified in the 13267 letter dated 9/10/01.

[7] Concurrent with receiving surface water sampling.

[8] 24-hour flow proportioned composite.

[9] Hardness, pH, and temperature data shall be collected at the same time and on the same date. Metals to be reported in total recoverable concentration.

[10] Acute Bioassays shall be conducted in accordance with EPA/821-R-02-012, or later amendment, with Board staff approval, using rainbow trout, Oncorhynchus mykiss, as the test species. Temperature and pH shall be recorded at the time of bioassay collection.

[11] See Attachment H. Priority pollutants shall be sampled quarterly during the third year following the date of permit adoption and shall be conducted concurrently with upstream receiving water monitoring for hardness (as $CaCO_3$) and pH. Dioxin and furan sampling shall be performed only twice during the year, as described in Attachment H.

[12] Unfiltered methylmercury and total mercury samples shall be taken using clean hands/dirty hands procedures, as described in U.S. EPA method 1669: *Sampling Ambient Water for Trace Metals at EPA Water Quality Criteria Levels,* for collection of equipment blanks (section 9.4.4.2), and shall be analyzed by U.S. EPA method 1630/1631 (Revision E) with a method detection limit of 0.02 ng/l for methylmercury and 0.2 ng/l for total mercury.

[13] Standard minerals shall include the following: boron, calcium, iron, magnesium, potassium, sodium, chloride, manganese, phosphorus, total alkalinity (including alkalinity series), and hardness, and include verification that the analysis is complete (i.e., cation/anion balance).

[14] Report as total recoverable.

[15] Grab samples shall <u>not</u> be collected at the same time each day.

[16] Pollutants shall be analyzed using the analytical methods as described in 40 CFR Part 136.

TENTATIVE ORDER

## V. WHOLE EFFLUENT TOXICITY TESTING REQUIREMENTS

A. **Acute Toxicity Testing.** The Discharger shall conduct acute toxicity testing to determine whether the effluent is contributing acute toxicity to the receiving water. The Discharger shall meet the following acute toxicity testing requirements:

1. *Monitoring Frequency* – the Discharger shall perform quarterly acute toxicity testing, concurrent with effluent ammonia sampling.

2. *Sample Types* – For static non-renewal and static renewal testing, the samples shall be grab samples and shall be representative of the volume and quality of the discharge. The effluent samples shall be taken at the effluent monitoring location EFF-001.

3. *Test Species* – Test species shall be fathead minnows (*Pimephales promelas*).

4. *Methods* – The acute toxicity testing samples shall be analyzed using EPA-821-R-02-012, Fifth Edition. Temperature, total residual chlorine, and pH shall be recorded at the time of sample collection. No pH adjustment may be made unless approved by the Executive Officer.

5. *Test Failure* – If an acute toxicity test does not meet all test acceptability criteria, as specified in the test method, the Discharger must re-sample and re-test as soon as possible, not to exceed 7 days following notification of test failure.

B. **Chronic Toxicity Testing**. The Discharger shall conduct three species chronic toxicity testing to determine whether the effluent is contributing chronic toxicity to the receiving water. The Discharger shall meet the following chronic toxicity testing requirements:

1. *Monitoring Frequency* – the Discharger shall perform quarterly three species chronic toxicity testing.

2. *Sample Types* – Effluent samples shall be 24-hour composite samples and shall be representative of the volume and quality of the discharge. The effluent samples shall be taken at the effluent monitoring location specified in the Monitoring and Reporting Program. The receiving water control shall be a grab sample obtained from the RSW-001U and RSW-002U sampling locations, as identified in the Monitoring and Reporting Program.

3. *Sample Volumes* – Adequate sample volumes shall be collected to provide renewal water to complete the test in the event that the discharge is intermittent.

4. *Test Species* – Chronic toxicity testing measures sublethal (e.g. reduced growth, reproduction) and/or lethal effects to test organisms exposed to an effluent compared to that of the control organisms. The Discharger shall conduct chronic toxicity tests with:

   - The cladoceran, water flea, *Ceriodaphnia dubia* (survival and reproduction test);

TENTATIVE ORDER

- The fathead minnow, *Pimephales promelas* (larval survival and growth test); and
- The green alga, *Selenastrum capricornutum* (growth test).

5. *Methods* – The presence of chronic toxicity shall be estimated as specified in *Short-term Methods for Estimating the Chronic Toxicity of Effluents and Receiving Waters to Freshwater Organisms, Fourth Edition,* EPA/821-R-02-013, October 2002.

6. *Reference Toxicant* – As required by the SIP, all chronic toxicity tests shall be conducted with concurrent testing with a reference toxicant and shall be reported with the chronic toxicity test results.

7. *Dilutions* – For regular chronic toxicity monitoring, the testing shall be performed using 100% effluent and the receiving water controls. If toxicity is found in any regular effluent test, the Discharger must immediately retest using the dilution series identified in Table E-4. The receiving water control shall be used as the diluent (unless the receiving water is toxic). For accelerated and/or TRE monitoring, the chronic toxicity testing shall be performed using the full dilution series identified in Table E-4.

8. *Test Failure* –The Discharger must re-sample and re-test as soon as possible, but no later than fourteen (14) days after receiving notification of a test failure. A test failure is defined as follows:

   a. The reference toxicant test or the effluent test does not meet all test acceptability criteria as specified in the *Short-term Methods for Estimating the Chronic Toxicity of Effluents and Receiving Waters to Freshwater Organisms, Fourth Edition*, EPA/821-R-02-013, October 2002 (Method Manual), and its subsequent amendments or revisions; or

   b. The percent minimum significant difference (PMSD) measured for the test exceeds the upper PMSD bound variability criterion in Table 6 on page 52 of the Method Manual. (A retest is only required in this case if the test results do not exceed the monitoring trigger specified in Special Provisions VI. C.2.a.iii.)

**Table E-4. Chronic Toxicity Testing Dilution Series**

| Sample | Dilutions (%) | | | | | Controls | |
|---|---|---|---|---|---|---|---|
| | 100 | 75 | 50 | 25 | 12.5 | Receiving Water | Laboratory Water |
| % Effluent | 100 | 75 | 50 | 25 | 12.5 | 0 | 0 |
| % Receiving Water | 0 | 25 | 50 | 75 | 87.5 | 100 | 0 |
| % Laboratory Water | 0 | 0 | 0 | 0 | 0 | 0 | 100 |

C. **WET Testing Notification Requirements**. The Discharger shall notify the Regional Water Board within 24-hrs after the receipt of test results exceeding the monitoring

TENTATIVE ORDER

trigger during regular or accelerated monitoring, or an exceedance of the acute toxicity effluent limitation.

D. **WET Testing Reporting Requirements**. All toxicity test reports shall include the contracting laboratory's complete report provided to the Discharger and shall be in accordance with the appropriate "Report Preparation and Test Review" sections of the method manuals. At a minimum, whole effluent toxicity monitoring shall be reported as follows:

1. **Chronic WET Reporting.** Regular chronic toxicity monitoring results shall be reported to the Regional Water Board within 30 days following completion of the test, and shall contain, at minimum:

   a. The results expressed in TUc, measured as 100/NOEC, and also measured as $100/LC_{50}$, $100/EC_{25}$, $100/IC_{25}$, and $100/IC_{50}$, as appropriate.

   b. The statistical methods used to calculate endpoints;

   c. The statistical output page, which includes the calculation of the percent minimum significant difference (PMSD);

   d. The dates of sample collection and initiation of each toxicity test; and

   e. The results compared to the numeric toxicity monitoring trigger.

   Additionally, the monthly discharger self-monitoring reports shall contain an updated chronology of chronic toxicity test results expressed in TUc, and organized by test species, type of test (survival, growth or reproduction), and monitoring frequency, i.e., either quarterly, monthly, accelerated, or TRE.

2. **Acute WET Reporting.** Acute toxicity test results shall be submitted with the monthly discharger self-monitoring reports and reported as percent survival.

3. **TRE Reporting.** Reports for Toxicity Reduction Evaluations shall be submitted in accordance with the schedule contained in the Discharger's approved TRE Work Plan.

4. **Quality Assurance (QA).** The Discharger must provide the following information for QA purposes:

   a. Results of the applicable reference toxicant data with the statistical output page giving the species, NOEC, LOEC, type of toxicant, dilution water used, concentrations used, PMSD, and dates tested.

   b. The reference toxicant control charts for each endpoint, which include summaries of reference toxicant tests performed by the contracting laboratory.

   c. Any information on deviations or problems encountered and how they were dealt with.

## VI. LAND DISCHARGE MONITORING REQUIREMENTS – NOT APPLICABLE

TENTATIVE ORDER

## VII. RECLAMATION MONITORING REQUIREMENTS – NOT APPLICABLE

## VIII. RECEIVING WATER MONITORING REQUIREMENTS – SURFACE WATER AND GROUNDWATER

### A. Surface Water Monitoring Locations RSW-001U, RSW-001D, RSW-002U, and RSW-002D

1. The Discharger shall monitor Putah Creek at Monitoring Locations RSW-001U and RSW-001D as follows:

**Table E-5. Receiving Water Monitoring Requirements for RSW-001U and RSW-001D**

| Parameter | Units | Sample Type | Minimum Sampling Frequency | Required Analytical Test Method |
|---|---|---|---|---|
| Dissolved Oxygen | mg/L | Grab[2] | Weekly | [1] |
| pH | Standard Units | Grab[2] | Weekly | [1] |
| Temperature | °F (°C) | Grab[2] | Weekly | [1] |
| Electrical Conductivity @ 25°C | µmhos/cm | Grab[2] | Weekly | [1] |
| Hardness (as $CaCO_3$) | mg/L | Grab[2] | Weekly | [1] |
| Fecal Coliform Organisms | MPN/100mL | Grab[2] | Quarterly | [1] |
| Radionuclides | PCi/L | Grab[2] | Annually | [1] |
| Priority Pollutants and other Constituents of Concern[3, 4, 5, 6] | µg/L | Grab[2] | [7] | [1] |

[1] As specified in 40 CFR Part 136.

[2] Grab samples shall not be collected at the same time each day.

[3] For priority pollutant constituents with effluent limitations, detection limits shall be below the effluent limitations. If the lowest minimum level (ML) published in Appendix 4 of the Policy for Implementation of Toxics Standards for Inland Surface Waters, Enclosed Bays, and Estuaries of California (State Implementation Plan or SIP) is not below the effluent limitation, the detection limit shall be the lowest ML. For priority pollutant constituents without effluent limitations, the detection limits shall be equal to or less than the lowest ML published in Appendix 4 of the SIP.

[4] Priority Pollutants is defined as US EPA Priority Pollutants and consists of the constituents listed in the most recent National Toxics Rule and California Toxics Rule and constituents identified in the 13267 letter dated 9/10/01.

[5] Concurrent with effluent water sampling.

[6] Hardness, pH, and temperature data shall be collected at the same time and on the same date. Metals to be reported in total recoverable concentration.

[7] See Attachment H. Priority pollutants shall be sampled quarterly during the third year following the date of permit adoption and shall be conducted concurrently with upstream receiving water monitoring for hardness (as $CaCO_3$) and pH. Dioxin and furan sampling shall be performed only twice during the year, as described in Attachment H.

TENTATIVE ORDER

2. The Discharger shall monitor Putah Creek at Monitoring Locations RSW-002U and RSW-002D as follows:

**Table E-6. Receiving Water Monitoring Requirements for RSW-002U and RSW-002D**

| Parameter | Units | Sample Type | Minimum Sampling Frequency | Required Analytical Test Method |
|---|---|---|---|---|
| Dissolved Oxygen | mg/L | Grab[2] | Monthly[8] | [1] |
| pH | Standard Units | Grab[2] | Monthly[8] | [1] |
| Temperature | °F (°C) | Grab[2] | Monthly[8] | [1] |
| Electrical Conductivity @ 25°C | µmhos/cm | Grab[2] | Monthly[8] | [1] |
| Hardness (as $CaCO_3$) | mg/L | Grab[2] | Monthly[8] | [1] |
| Fecal Coliform Organisms | MPN/100mL | Grab[2] | Quarterly[8] | [1] |
| Radionuclides | PCi/L | Grab[2] | Annually[8] | [1] |
| Priority Pollutants and other Constituents of Concern[3, 4, 5, 6] | µg/L | Grab[2] | [7] | [1] |

[1] As specified in 40 CFR Part 136.

[2] Grab samples shall <u>not</u> be collected at the same time each day.

[3] For priority pollutant constituents with effluent limitations, detection limits shall be below the effluent limitations. If the lowest minimum level (ML) published in Appendix 4 of the Policy for Implementation of Toxics Standards for Inland Surface Waters, Enclosed Bays, and Estuaries of California (State Implementation Plan or SIP) is not below the effluent limitation, the detection limit shall be the lowest ML. For priority pollutant constituents without effluent limitations, the detection limits shall be equal to or less than the lowest ML published in Appendix 4 of the SIP.

[4] Priority Pollutants is defined as US EPA Priority Pollutants and consists of the constituents listed in the most recent National Toxics Rule and California Toxics Rule and constituents identified in the 13267 letter dated 9/10/01.

[5] Concurrent with effluent water sampling.

[6] Hardness, pH, and temperature data shall be collected at the same time and on the same date. Metals to be reported in total recoverable concentration.

[7] See Attachment H. Priority pollutants shall be sampled quarterly during the third year following the date of permit adoption and shall be conducted concurrently with upstream receiving water monitoring for hardness (as $CaCO_3$) and pH. Dioxin and furan sampling shall be performed only twice during the year, as described in Attachment H.

[8] Monitoring must be concurrent with effluent discharge.

2. All receiving monitoring results, log notations, and notes shall be reported monthly. Date and time of sample collection shall be recorded and reported.

3. A separate log shall be kept of the receiving water conditions. Attention shall be given to the presence or absence of:
   a. Floating or suspended matter
   b. Discoloration
   c. Bottom deposits
   d. Aquatic life
   e. Visible films, sheen, or coatings
   f. Fungi, slimes, or objectionable growths
   g. Potential nuisance conditions
   h. Flow direction
   i. Upstream conditions

TENTATIVE ORDER

4. Notes on receiving water conditions shall be summarized in the monitoring report.

## B. Groundwater Monitoring Program

1. The Discharger shall monitor the groundwater at monitoring locations RGW-001, RGW-002, and RGW-003 as follows. Prior to sampling, the groundwater elevations shall be measured and the wells shall be purged of at least three well volumes until temperature, pH, and electrical conductivity have stabilized. Depth of groundwater shall be measured the nearest 0.01 feet. Water table elevations shall be calculated and used to determine groundwater gradient and direction of flow. Samples shall be collected using standard USEPA methods. Groundwater monitoring shall include, at minimum, the following:

**Table E-7. Groundwater Monitoring Requirements**

| Parameter | Units | Sample Type | Minimum Sampling Frequency | Required Analytical Test Method |
|---|---|---|---|---|
| Groundwater Elevation[2] | 1/100th foot | Measurement | Monthly | Observation |
| Depth to Groundwater[2] | 1/100th foot | Measurement | Monthly | Observation |
| Gradient Magnitude | feet/feet | Calculated | Monthly | Observation |
| Gradient Direction | Degrees | Calculated | Monthly | Observation |
| Electrical Conductivity (EC) at 25°C | µmhos/cm | Grab | Monthly | [1] |
| pH | Standard Units | Grab | Monthly | [1] |
| Nitrate (as N) | mg/l | Grab | Monthly | [1] |
| Total Coliform Organisms | MPN/100ml | Grab | Monthly | [1] |
| Heavy Metals (Title 22) | mg/L | Grab | Annually | [1] |
| Volatile Organics (US EPA 601) | µg/L | Grab | Annually | [1] |
| Semi-Volatile Organics (US EPA 602) | µg/L | Grab | Annually | [1] |
| Oxygenate Compounds (US EPA 8260) | µg/L | Grab | Annually | [1] |

[1] As specified in 40 CFR Part 136.
[2] Groundwater elevation shall be used to calculate the direction and gradient of the flow. Elevations shall be measured to the nearest one-hundredth of a foot from mean sea level, from a surveyed measured point elevation on the well. The groundwater elevation shall be measured prior to purging the wells.

2. Groundwater monitoring results for the constituents listed above shall be submitted monthly and include a site map showing the location of the wells and the direction and gradient of groundwater flow.

3. A groundwater report shall be submitted annually, which contains a brief written description of any groundwater investigation and sampling work completed for the

TENTATIVE ORDER

year, a site map showing the location of all monitoring wells, and table showing all groundwater monitoring data collected since the wells were installed, including groundwater depth and elevation data, pH, EC, and all other monitored constituents.

## IX. OTHER MONITORING REQUIREMENTS

### A. Biosolids

#### 1. Monitoring Location BIO-001

a. A composite sample of sludge shall be collected annually at Monitoring Location BIO-001 in accordance with EPA's POTW Sludge Sampling and Analysis Guidance Document, August 1989, and tested for priority pollutants listed in 40 CFR Section 122 Appendix D, Tables II and III (excluding total phenols).

b. A composite sample of sludge shall be collected when sludge is removed from the ponds for disposal in accordance with USEPA's POTW Sludge Sampling and Analysis Guidance Document, August 1989, and tested for the metals listed in Title 22.

c. Sampling records shall be retained for a minimum of **five years**. A log shall be kept of sludge quantities generated and of handling and disposal activities. The frequency of entries is discretionary; however, the log should be complete enough to serve as a basis for part of the annual report.

d. Upon removal of sludge, the Discharger shall submit characterization of sludge quality, including sludge percent solids and quantitative results of chemical analysis for the priority pollutants listed in 40 CFR 122 Appendix D, Tables II and III (excluding total phenols). Suggested methods for analysis of sludge are provided in USEPA publications titled "Test Methods for Evaluating Solid Waste: Physical/Chemical Methods" and "Test Methods for Organic Chemical Analysis of Municipal and Industrial Wastewater". Recommended analytical holding times for sludge samples should reflect those specified in 40 CFR 136.6.3(e). Other guidance is available in USEPA's POTW Sludge Sampling and Analysis Guidance Document, August 1989.

### B. Municipal Water Supply

#### 1. Monitoring Location SPL-001

The Discharger shall monitor the Municipal Water Supply at SPL-001 as follows. A sampling station shall be established where a representative sample of the municipal water supply can be obtained. Municipal water supply samples shall be collected at approximately the same time as effluent samples.

TENTATIVE ORDER

**Table E-8. Municipal Water Supply Monitoring Requirements**

| Parameter | Units | Sample Type | Minimum Sampling Frequency | Required Analytical Test Method |
|---|---|---|---|---|
| Total Dissolved Solids | mg/L | Grab | Quarterly | [3] |
| Electrical Conductivity @ 25°C[1] | µmhos/cm | Grab | Quarterly | [3] |
| Standard Minerals[2] | mg/L | Grab | Quarterly | [3] |
| Selenium | mg/L | Grab | Quarterly | [3] |
| Chromium VI | mg/L | Grab | Quarterly | [3] |

[1] If the water supply is from more than one source, the EC/TDS shall be reported as a weighted average and include copies of supporting calculations.
[2] Standard minerals shall include the following: boron, calcium, iron, magnesium, potassium, sodium, chloride, manganese, phosphorus, total alkalinity (including alkalinity series), and hardness, and include verification that the analysis is complete (i.e., cation/anion balance).
[3] As specified in 40 CFR Part 136.

### C. Ultraviolet Disinfection (UV) System

1. The Discharger shall monitor as follows:

**Table E-9. Ultraviolet Disinfection System Monitoring Requirements**

| Parameter | Units | Sample Type | Minimum Sampling Frequency |
|---|---|---|---|
| Flow rate[3] | mgd | Meter | Continuous |
| Turbidity[1, 3] | NTU | Meter | Continuous |
| Number of UV banks in operation | Number | Meter | Continuous |
| UV Transmittance[3] | Percent (%) | Meter | Continuous |
| UV Power Setting | Percent (%) | Meter | Continuous |
| UV Dose[2] | MW-sec/cm$^2$ | Calculated | Continuous |

[1] Report daily average turbidity and maximum turbidity. If the influent to the UV system exceeds 10 NTU, collect an effluent grab sample and analyze for total Coliform organisms and report the duration of the turbidity exceedance.
[2] Report daily minimum UV dose, daily average UV dose, and weekly average UV does. For the daily minimum UV dose, also report associated number of banks, gallons per minute per lamp, power settings, and UV transmittance used in the calculation. If effluent discharge has received less than the minimum UV dose and is not diverted from discharging to Putah Creek, report the duration and dose calculation variables with each incident.
[3] To be monitored at EFF-001.

## X. REPORTING REQUIREMENTS

### A. General Monitoring and Reporting Requirements

1. The Discharger shall comply with all Standard Provisions (Attachment D) related to monitoring, reporting, and recordkeeping.

TENTATIVE ORDER

2. Upon written request of the Regional Water Board, the Discharger shall submit a summary monitoring report. The report shall contain both tabular and graphical summaries of the monitoring data obtained during the previous year(s).

3. **Compliance Time Schedules.** For compliance time schedules included in the Order, the Discharger shall submit to the Regional Water Board, on or before each compliance due date, the specified document or a written report detailing compliance or noncompliance with the specific date and task. If noncompliance is reported, the Discharger shall state the reasons for noncompliance and include an estimate of the date when the Discharger will be in compliance. The Discharger shall notify the Regional Water Board by letter when it returns to compliance with the compliance time schedule.

4. The Discharger shall report to the Regional Water Board any toxic chemical release data it reports to the State Emergency Response Commission within 15 days of reporting the data to the Commission pursuant to section 313 of the "Emergency Planning and Community Right to Know Act of 1986.

5. **Reporting Protocols.** The Discharger shall report with each sample result the applicable Reporting Level (RL) and the current Method Detection Limit (MDL), as determined by the procedure in Part 136.

   The Discharger shall report the results of analytical determinations for the presence of chemical constituents in a sample using the following reporting protocols:

   a. Sample results greater than or equal to the RL shall be reported as measured by the laboratory (i.e., the measured chemical concentration in the sample).

   b. Sample results less than the RL, but greater than or equal to the laboratory's MDL, shall be reported as "Detected, but Not Quantified," or DNQ. The estimated chemical concentration of the sample shall also be reported.

      For the purposes of data collection, the laboratory shall write the estimated chemical concentration next to DNQ as well as the words "Estimated Concentration" (may be shortened to "Est. Conc."). The laboratory may, if such information is available, include numerical estimates of the data quality for the reported result. Numerical estimates of data quality may be percent accuracy (± a percentage of the reported value), numerical ranges (low to high), or any other means considered appropriate by the laboratory.

   c. Sample results less than the laboratory's MDL shall be reported as "Not Detected," or ND.

   d. Dischargers are to instruct laboratories to establish calibration standards so that the ML value (or its equivalent if there is differential treatment of samples relative to calibration standards) is the lowest calibration standard. At no time is the Discharger to use analytical data derived from *extrapolation* beyond the lowest point of the calibration curve.

TENTATIVE ORDER

1. **Multiple Sample Data.** When determining compliance with an AMEL, AWEL, or MDEL for priority pollutants and more than one sample result is available, the Discharger shall compute the arithmetic mean unless the data set contains one or more reported determinations of "Detected, but Not Quantified" (DNQ) or "Not Detected" (ND). In those cases, the Discharger shall compute the median in place of the arithmetic mean in accordance with the following procedure:

   a. The data set shall be ranked from low to high, ranking the reported ND determinations lowest, DNQ determinations next, followed by quantified values (if any). The order of the individual ND or DNQ determinations is unimportant.

   b. The median value of the data set shall be determined. If the data set has an odd number of data points, then the median is the middle value. If the data set has an even number of data points, then the median is the average of the two values around the middle unless one or both of the points are ND or DNQ, in which case the median value shall be the lower of the two data points where DNQ is lower than a value and ND is lower than DNQ.

**B. Self Monitoring Reports (SMRs)**

1. At any time during the term of this permit, the State or Regional Water Board may notify the Discharger to electronically submit Self-Monitoring Reports (SMRs) using the State Water Board's California Integrated Water Quality System (CIWQS) Program Web site (http://www.waterboards.ca.gov/ciwqs/index.html). Until such notification is given, the Discharger shall submit hard copy SMRs. The CIWQS Web site will provide additional directions for SMR submittal in the event there will be service interruption for electronic submittal.

2. Monitoring results shall be submitted to the Regional Water Board by the **first day** of the second month following sample collection. Quarterly and annual monitoring results shall be submitted by the **first day of the second month following each calendar quarter, semi-annual period, and year**, respectively.

3. In reporting the monitoring data, the Discharger shall arrange the data in tabular form so that the date, the constituents, and the concentrations are readily discernible. The data shall be summarized in such a manner to illustrate clearly whether the discharge complies with waste discharge requirements. The highest daily maximum for the month, monthly and weekly averages, and medians, and removal efficiencies (%) for BOD and Total Suspended Solids, shall be determined and recorded as needed to demonstrate compliance.

4. With the exception of flow, all constituents monitored on a continuous basis (metered), shall be reported as daily maximums, daily minimums, and daily averages; flow shall be reported as the total volume discharged per day for each day of discharge.

5. If the Discharger monitors any pollutant at the locations designated herein more frequently than is required by this Order, the results of such monitoring shall be

TENTATIVE ORDER

included in the calculation and reporting of the values required in the discharge monitoring report form. Such increased frequency shall be indicated on the discharge monitoring report form.

6. A letter transmitting the self-monitoring reports shall accompany each report. Such a letter shall include a discussion of requirement violations found during the reporting period, and actions taken or planned for correcting noted violations, such as operation or facility modifications. If the Discharger has previously submitted a report describing corrective actions and/or a time schedule for implementing the corrective actions, reference to the previous correspondence will be satisfactory. The transmittal letter shall contain the penalty of perjury statement by the Discharger, or the Discharger's authorized agent, as described in the Standard Provisions.

7. SMRs must be submitted to the Regional Water Board, signed and certified as required by the Standard Provisions (Attachment D), to the address listed below:

   Regional Water Quality Control Board
   Central Valley Region
   NPDES Compliance and Enforcement Unit
   11020 Sun Center Dr., Suite #200
   Rancho Cordova, CA 95670-6114

8. Monitoring periods and reporting for all required monitoring shall be completed according to the following schedule:

**Table E-10. Monitoring Periods and Reporting Schedule**

| Sampling Frequency | Monitoring Period Begins On… | Monitoring Period | SMR Due Date |
|---|---|---|---|
| Continuous | First day of calendar month following effective date of this Order | All | Submit with monthly SMR |
| Hourly | First day of calendar month following effective date of this Order | Hourly | Submit with monthly SMR |
| Daily | First day of calendar month following effective date of this Order | (Midnight through 11:59 PM) or any 24-hour period that reasonably represents a calendar day for purposes of sampling. | Submit with monthly SMR |
| Weekly | First Sunday following first day of calendar month following permit effective date | Sunday through Saturday | Submit with monthly SMR |
| Monthly | First calendar month following permit effective date | 1st day of calendar month through last day of calendar month | First day of second calendar month following month of sampling |

TENTATIVE ORDER

| | | | |
|---|---|---|---|
| Quarterly | Closest of 1 January, 1 April, 1 July, or 1 October following (or on) permit effective date | 1 January through 31 March<br>1 April through 30 June<br>1 July through 30 September<br>1 October through 31 December | 1 May of the same year<br><br>1 August of the same year<br><br>1 November of the same year<br><br>1 February of the next year |
| Semiannually | Closest of 1 January or 1 July following (or on) permit effective date | 1 January through 30 June<br>1 July through 31 December | 1 August of the same year<br><br>1 February of the next year |
| Annually | 1 January following (or on) permit effective date | 1 January through 31 December | 1 February of the next year |

## C. Discharge Monitoring Reports (DMRs)

1. As described in Section X.B.1 above, at any time during the term of this permit, the State or Regional Water Board may notify the Discharger to electronically submit SMRs that will satisfy federal requirements for submittal of Discharge Monitoring Reports (DMRs). Until such notification is given, the Discharger shall submit DMRs in accordance with the requirements described below.

2. DMRs must be signed and certified as required by the standard provisions (Attachment D). The Discharger shall submit the original DMR and one copy of the DMR to the address listed below:

| Standard Mail | FedEx/UPS/<br>Other Private Carriers |
|---|---|
| State Water Resources Control Board<br>Division of Water Quality<br>c/o DMR Processing Center<br>PO Box 100<br>Sacramento, CA 95812-1000 | State Water Resources Control Board<br>Division of Water Quality<br>c/o DMR Processing Center<br>1001 I Street, 15th Floor<br>Sacramento, CA 95814 |

3. All discharge monitoring results must be reported on the official USEPA pre-printed DMR forms (EPA Form 3320-1). Forms that are self-generated cannot be accepted unless they follow the exact same format as EPA form 3320-1.

## D. Other Reports

1. **Progress Reports.** As specified in the compliance time schedules required in Special Provisions VI, progress reports shall be submitted in accordance with the

TENTATIVE ORDER

following reporting requirements. At minimum, the progress reports shall include a discussion of the status of final compliance, whether the Discharger is on schedule to meet the final compliance date, and the remaining tasks to meet the final compliance date.

**Table E-11. Reporting Requirements for Special Provisions Progress Reports**

| Special Provision | Reporting Requirements |
|---|---|
| BPTC Evaluation Tasks, as applicable | **1 February**, annually**,** following completion of Task 4 of BPTC Evaluation Compliance Schedule |
| Pollution Minimization Plan for mercury | **1 June,** annually |

2. Within **60 days** of permit adoption, the Discharger shall submit a report outlining minimum levels, method detection limits, and analytical methods for approval, with a goal to achieve detection levels below applicable water quality criteria. At a minimum, the Discharger shall comply with the monitoring requirements for CTR constituents as outlined in Section 2.3 and 2.4 of the *Policy for Implementation of Toxics Standards for Inland Surface Waters, Enclosed Bays, and Estuaries of California*, adopted 2 March 2000 by the State Water Resources Control Board. All peaks identified by analytical methods shall be reported.

3. The Discharger's sanitary sewer system collects wastewater using sewers, pipes, pumps, and/or other conveyance systems and directs the raw sewage to the wastewater treatment plant. A "sanitary sewer overflow" is defined as a discharge to ground or surface water from the sanitary sewer system at any point upstream of the wastewater treatment plant. Sanitary sewer overflows are prohibited by this Order. All violations must be reported as required in Standard Provisions. Facilities (such as wet wells, regulated impoundments, tanks, highlines, *etc*.) may be part of a sanitary sewer system and discharges to these facilities are not considered sanitary sewer overflows, provided that the waste is fully contained within these temporary storage facilities.

4. **Annual Operations Report**. By **30 January** of each year, the Discharger shall submit a written report to the Executive Officer containing the following:

   a. The names, certificate grades, and general responsibilities of all persons employed at the Facility.

   b. The names and telephone numbers of persons to contact regarding the plant for emergency and routine situations.

   c. A statement certifying when the flow meter(s) and other monitoring instruments and devices were last calibrated, including identification of who performed the calibration.

TENTATIVE ORDER

d. A statement certifying whether the current operation and maintenance manual, and contingency plan, reflect the wastewater treatment plant as currently constructed and operated, and the dates when these documents were last revised and last reviewed for adequacy.

e. The Discharger may also be requested to submit an annual report to the Regional Water Board with both tabular and graphical summaries of the monitoring data obtained during the previous year. Any such request shall be made in writing. The report shall discuss the compliance record. If violations have occurred, the report shall also discuss the corrective actions taken and planned to bring the discharge into full compliance with the waste discharge requirements.

TENTATIVE ORDER

## ATTACHMENT F – FACT SHEET

### Table of Contents

I. Permit Information ..... F-3
II. Facility Description ..... F-4
A. Description of Wastewater and Biosolids Treatment or Controls ..... F-4
B. Discharge Points and Receiving Waters ..... F-4
C. Summary of Existing Requirements and Self-Monitoring Report (SMR) Data ..... F-5
D. Compliance Summary ..... F-6
E. Planned Changes ..... F-6
III. Applicable Plans, Policies, and Regulations ..... F-6
A. Legal Authority ..... F-6
B. California Environmental Quality Act (CEQA) ..... F-7
C. State and Federal Regulations, Policies, and Plans ..... F-7
D. Impaired Water Bodies on CWA 303(d) List ..... F-9
E. Other Plans, Polices and Regulations ..... F-10
IV. Rationale For Effluent Limitations and Discharge Specifications ..... F-10
A. Discharge Prohibitions ..... F-11
B. Technology-Based Effluent Limitations ..... F-12
1. Scope and Authority ..... F-12
2. Applicable Technology-Based Effluent Limitations ..... F-12
C. Water Quality-Based Effluent Limitations (WQBELs) ..... F-13
1. Scope and Authority ..... F-13
2. Applicable Beneficial Uses and Water Quality Criteria and Objectives ..... F-14
3. Determining the Need for WQBELs ..... F-16
4. WQBEL Calculations ..... F-32
5. Whole Effluent Toxicity (WET) ..... F-36
D. Final Effluent Limitations ..... F-37
1. Mass-based Effluent Limitations. ..... F-37
2. Averaging Periods for Effluent Limitations. ..... F-38
3. Satisfaction of Anti-Backsliding Requirements. ..... F-38
4. Satisfaction of Antidegradation Policy ..... F-41
E. Interim Effluent Limitations ..... F-44
F. Land Discharge Specifications – Not Applicable ..... F-44
G. Reclamation Specifications ..... F-44
V. Rationale for Receiving Water Limitations ..... F-44
A. Surface Water ..... F-45
B. Groundwater ..... F-48
VI. Rationale for Monitoring and Reporting Requirements ..... F-49
A. Influent Monitoring ..... F-49
B. Effluent Monitoring ..... F-49
C. Whole Effluent Toxicity Testing Requirements ..... F-50
D. Receiving Water Monitoring ..... F-50
1. Surface Water ..... F-50
2. Groundwater ..... F-50
E. Ultraviolet (UV) Disinfection System Monitoring ..... F-51

TENTATIVE ORDER

F. Other Monitoring Requirements ..... F-51
VII. Rationale for Provisions ..... F-52
A. Standard Provisions ..... F-52
B. Special Provisions ..... F-52
1. Reopener Provisions ..... F-52
2. Special Studies and Additional Monitoring Requirements ..... F-53
3. Best Management Practices and Pollution Prevention ..... F-56
4. Construction, Operation, and Maintenance Specifications ..... F-57
5. Special Provisions for Municipal Facilities (POTWs Only) ..... F-58
6. Other Special Provisions ..... F-59
VIII. Public Participation ..... F-59
A. Notification of Interested Parties ..... F-59
B. Written Comments ..... F-59
C. Public Hearing ..... F-60
D. Waste Discharge Requirements Petitions ..... F-60
E. Information and Copying ..... F-60
F. Register of Interested Persons ..... F-60
G. Additional Information ..... F-61

## List of Tables

Table F-1. Facility Information ..... E-3
Table F-2. Historic Effluent Limitations and Monitoring Data ..... E-5
Table F-3. Summary of Technology-based Effluent Limitations ..... E-13
Table F-4. Salinity Water Quality Criteria/Objectives ..... E-26
Table F-5. WQBEL Calculations for Aluminum ..... E-33
Table F-6. WQBEL Calculations for Ammonia ..... E-34
Table F-7. WQBEL Calculations for Cyanide ..... E-34
Table F-8. WQBEL Calculations for Selenium ..... E-35
Table F-9. Summary of Water Quality-based Effluent Limitations ..... E-35
Table F-10. Summary of Final Effluent Limitations ..... E-43
Table F-11. Interim Effluent Limitation Calculation Summary ..... E-44

TENTATIVE ORDER

## ATTACHMENT F – FACT SHEET

As described in section II of this Order, this Fact Sheet includes the legal requirements and technical rationale that serve as the basis for the requirements of this Order.

This Order has been prepared under a standardized format to accommodate a broad range of discharge requirements for Dischargers in California. Only those sections or subsections of this Order that are specifically identified as "not applicable" have been determined not to apply to this Discharger. Sections or subsections of this Order not specifically identified as "not applicable" are fully applicable to this Discharger.

## I. PERMIT INFORMATION

The following table summarizes administrative information related to the facility.

**Table F-1. Facility Information**

| | |
|---|---|
| **WDID** | |
| **Discharger** | University of California Davis |
| **Name of Facility** | University of California Davis Main Wastewater Treatment Plant |
| **Facility Address** | 1140 Old Davis Road<br>Davis, California 95616<br>Solano and Yolo Counties |
| **Facility Contact, Title and Phone** | Michael Fan, Senior Engineer, (530) 752-7553 |
| **Authorized Person to Sign and Submit Reports** | Michael Fan, Senior Engineer, (530) 752-7553 |
| **Mailing Address** | Facilities Management: Utilities - WWTP<br>One Shields Avenue<br>Davis, California 95616 |
| **Billing Address** | One Shields Avenue<br>Davis, California 95616 |
| **Type of Facility** | POTW |
| **Major or Minor Facility** | Major |
| **Threat to Water Quality** | 1 |
| **Complexity** | A |
| **Pretreatment Program** | N |
| **Reclamation Requirements** | Not applicable |
| **Facility Permitted Flow** | 3.6 million gallons per day (mgd) |
| **Facility Design Flow** | 3.6 mgd |
| **Watershed** | Putah Creek Watershed |
| **Receiving Water** | North Fork and South Fork of Putah Creek |
| **Receiving Water Type** | Sacramento-San Joaquin Delta |

**A.** University of California, Davis (hereinafter Discharger) is the owner and operator of University of California, Davis Main Wastewater Treatment Plant (hereinafter Facility), a Publicly Owned Treatment Works.

For the purposes of this Order, references to the "discharger" or "permittee" in applicable federal and state laws, regulations, plans, or policy are held to be equivalent to references to the Discharger herein.

**B.** The Facility discharges wastewater to the North and South Fork of Putah Creek, waters of the United States, and is currently regulated by Order R5-2003-0003 Amendment No. 1 which was adopted on 18 March 2004 and expired on 01 January 2008. The terms and conditions of the current Order have been automatically continued and remain in effect until new Waste Discharge Requirements and NPDES permit are adopted pursuant to this Order.

**C.** The Discharger filed a report of waste discharge and submitted an application for renewal of its Waste Discharge Requirements (WDRs) and National Pollutant Discharge Elimination System (NPDES) permit on 29 June 2007. Supplemental information was requested on 19 May 2008 and received on 19 May 2008. A site visit was conducted on 9 May 2008, to observe operations and collect additional data to develop permit limitations and conditions.

## II. FACILITY DESCRIPTION

The Discharger provides sewerage service for the University of California, Davis campus and serves a population of approximately 45,000. The WWTP design daily average flow capacity is 3.6 mgd.

### A. Description of Wastewater and Biosolids Treatment or Controls

The treatment system at the Facility consists of a communitor, mechanical bar screen, oxidation ditch activated sludge process, secondary clarifiers, filtration, and ultraviolet light disinfection. Biosolids treatment consists of solids stabilization basins and sludge drying beds. Each summer, stabilized sludge is pumped into the drying beds for dewatering and dewatered biosolids are transported and disposed at local Class II landfill as daily cover.

### B. Discharge Points and Receiving Waters

1. The Facility is located in Section 21, T8N, R2E, MDB&M, as shown in Attachment B (Figure B-1), a part of this Order.

2. Treated municipal wastewater is discharged at Discharge Point 001 to the South Fork of Putah Creek, a water of the United States and a tributary to the Sacramento River at a point Latitude 38$^{o}$, 31', 03.3" N and longitude 121$^{o}$, 45', 26.7" W.

3. Treated municipal wastewater is also discharged at Discharge Point 002 to the Arboretum Waterway (North Fork of Putah Creek), a water of the United States and a tributary to the Sacramento River at a point Latitude 38º, 31', 56" N and longitude 121º, 45', 50.6" W.

4. Putah Creek originally flowed through the City of Davis where the University is located. To prevent flooding, the City created the South Fork of Putah Creek and damming what is now known as the Arboretum Waterway (North Fork of Putah Creek). The Arboretum Waterway is located on the University of California, Davis campus and used as a storm water retention basin and recreational impoundment. During dry weather, the arboretum water becomes stagnant and fills with algae. The Arboretum Waterway currently discharges into the South Fork of Putah Creek for storm water management purposes.

   The previous Order (Waste Discharge Requirements Order No. R5-2003-2003, Amendment No. 1) recognized that discharge of Arboretum Waterway flow to the South Fork of Putah Creek may require an NPDES permit. A letter, dated 20 October 2006, sent by the Regional Water Board Assistant Executive Officer to the Discharger approved the rerouting of Title 22 quality wastewater, via the Arboretum Waterway, to the South Fork of Putah Creek, as a means to improve the water quality of the existing storm water discharge into the South Fork of Putah Creek. The letter required that the rerouting of Title 22 wastewater flow via the Arboretum Waterway be in accordance with the existing effluent limitations in the existing Order at the time the letter was sent to the Discharger.

## C. Summary of Existing Requirements and Self-Monitoring Report (SMR) Data

Effluent limitations for discharge to Putah Creek contained in the existing Order for discharges from Discharge Point No. 001 and representative monitoring data from the term of the previous Order are as follows:

**Table F-2. Historic Effluent Limitations and Monitoring Data**

| Parameter | Units | Effluent Limitation | | | Monitoring Data (From January 2003 – To May 2007) | | |
|---|---|---|---|---|---|---|---|
| | | Average Monthly | Average Weekly | Maximum Daily | Highest Average Monthly Discharge | Highest Average Weekly Discharge | Highest Daily Discharge |
| Flow | mgd | -- | -- | 2.7 | 2.2 | -- | 2.9 |
| BOD[1] | mg/l | 10[2] | 15[2] | 25[2] | 2.5 | -- | 5.3 |
| Total Suspended Solids | mg/l | 10[2] | 15[2] | 25[2] | 2.4 | -- | 4.4 |
| pH | SU | -- | -- | 6.5-8.5[9] | Reported values range from 6.5 – 8.57 | | |
| Total Coliform Organisms | MPN/100ml | -- | 2.2[3] | 23 | <82 | -- | >1600 |
| Settleable Solids | ml/l | -- | -- | 0.1 | <0.1 | -- | <0.1 |
| Turbidity[5] | NTU | -- | 2[4] | 5 | 1.6 | -- | 6.7 |
| Total Residual Chlorine | mg/l | -- | 0.01[6] | 0.02[7] | -- | -- | -- |
| Ammonia (as N) | mg/l | Attachment | -- | Attachment[7] | 0.77 | -- | 2.6 |

| Parameter | Units | Effluent Limitation | | | Monitoring Data (From January 2003 – To May 2007) | | |
|---|---|---|---|---|---|---|---|
| | | Average Monthly | Average Weekly | Maximum Daily | Highest Average Monthly Discharge | Highest Average Weekly Discharge | Highest Daily Discharge |
| Nitrate + Nitrite (as N) | mg/l | 10 | -- | -- | 10.5 | -- | 11.5 |
| Aluminum | µg/l | -- | 87[6] | 750[7] | 105 | -- | 252 |
| Cyanide | µg/l | -- | 5.2[6] | 22[7] | 6.1 | -- | 6.1 |
| Copper | µg/l | -- | Attachment[6] | -- | 41[10] | -- | 71[10] |
| Dichloromethane | µg/l | 4.7 | -- | -- | <2 | -- | <2 |
| Dioxin/Furans | pg/l | 0.014 | -- | -- | -- | -- | -- |
| Iron | µg/l | 300 | -- | -- | 145 | -- | 145 |
| Electrical Conductivity | µmhos/cm | 900 | -- | 2,200 | 1396 | -- | 1,679 |
| Lead[8] | µg/l | -- | Attachment[6] | -- | <2.5 | -- | <2.5 |

[1] 5-day, 20°C biochemical oxygen demand.
[2] To be ascertained by a 24-hour composite.
[3] 7-day median.
[4] Daily average.
[5] The turbidity shall not exceed 5 NTU more than 5 percent of the time within a 24-hour period. At no time shall the turbidity exceed 10 NTU.
[6] 4-day average.
[7] 1-Hour average.
[8] Limitation from 30 December 2007 forward.
[9] The discharge shall not have a pH less than 6.5 nor greater than 8.5.
[10] Data from August 2004-May 2007.

### D. Compliance Summary

From January 2001 to April 2008 there were a total of 82 violations subject to mandatory minimum penalties (MMPs) for discharge exceedances of aluminum, coliform, copper, cyanide, EC, pH, total suspended solids, and turbidity.

### E. Planned Changes

The treatment plant has just finished its first phase of expansion. There are no planned changes. The next phase of expansion will occur during the next permit cycle.

## III. APPLICABLE PLANS, POLICIES, AND REGULATIONS

The requirements contained in this Order are based on the applicable plans, policies, and regulations identified in section II of the Limitations and Discharge Requirements (Findings). This section provides supplemental information, where appropriate, for the plans, policies, and regulations relevant to the discharge.

### A. Legal Authority

See Limitations and Discharge Requirements - Findings, Section II.C.

## B. California Environmental Quality Act (CEQA)

See Limitations and Discharge Requirements - Findings, Section II.E.

## C. State and Federal Regulations, Policies, and Plans

1. **Water Quality Control Plans**. The Regional Water Board adopted a *Water Quality Control Plan, Fourth Edition (Revised August 2006), for the Sacramento and San Joaquin River Basins* (Basin Plan) that designates beneficial uses, establishes water quality objectives, and contains implementation programs and policies to achieve those objectives for all waters addressed through the plan. In addition, State Water Board Resolution No. 88-63 requires that, with certain exceptions, the Regional Water Board assign the municipal and domestic supply use to water bodies that do not have beneficial uses listed in the Basin Plan. The beneficial uses of Putah Creek downstream of the discharge are municipal and domestic supply (MUN), agricultural irrigation and stock watering (AGR), water contact recreation (REC-1), non-contact water recreation (REC-2), warm freshwater aquatic habitat (WARM), cold freshwater aquatic habitat (COLD), warm spawning habitat (SPWN), and wildlife habitat (WILD).

   The Basin Plan on page II-1.00 states: "*Protection and enhancement of existing and potential beneficial uses are primary goals of water quality planning…*" and with respect to disposal of wastewaters states that "...*disposal of wastewaters is [not] a prohibited use of waters of the State; it is merely a use which cannot be satisfied to the detriment of beneficial uses.*"

   The federal CWA section 101(a)(2), states: "*it is the national goal that wherever attainable, an interim goal of water quality which provides for the protection and propagation of fish, shellfish, and wildlife, and for recreation in and on the water be achieved by July 1, 1983.*" Federal Regulations, developed to implement the requirements of the CWA, create a rebuttable presumption that all waters be designated as fishable and swimmable. Federal Regulations, 40 CFR sections 131.2 and 131.10, require that all waters of the State regulated to protect the beneficial uses of public water supply, protection and propagation of fish, shell fish and wildlife, recreation in and on the water, agricultural, industrial and other purposes including navigation. Section 131.3(e), 40 CFR, defines existing beneficial uses as those uses actually attained after November 28, 1975, whether or not they are included in the water quality standards. Federal Regulation, 40 CFR section 131.10 requires that uses be obtained by implementing effluent limitations, requires that all downstream uses be protected and states that in no case shall a state adopt waste transport or waste assimilation as a beneficial use for any waters of the United States.

   This Order contains Effluent Limitations requiring a tertiary level of treatment, or equivalent, which is necessary to protect the beneficial uses of the receiving water. The Regional Water Board has considered the factors listed in CWC section 13241

in establishing these requirements, as discussed in more detail in the Fact Sheet, Attachment F, IV.B.2.

Putah Creek originally flowed through the City of Davis where the University is located. To prevent flooding, the City created South Fork Putah Creek and damming what is now known as the North Fork of Putah Creek (Arboretum Waterway). The Arboretum Waterway is a water of the United States and is located on the campus and used as a storm water retention basin and recreational impoundment. During dry weather, the arboretum water becomes stagnant and fills with algae. The Arboretum Waterway currently discharges into the South Fork of Putah Creek for storm water management purposes.

2. **Antidegradation Policy.** Section 131.12 requires that the state water quality standards include an antidegradation policy consistent with the federal policy. The State Water Board established California's antidegradation policy in State Water Board Resolution No. 68-16. Resolution No. 68-16 incorporates the federal antidegradation policy where the federal policy applies under federal law. Resolution No. 68-16 requires that existing water quality be maintained unless degradation is justified based on specific findings. The Regional Water Board's Basin Plan implements, and incorporates by reference, both the State and federal antidegradation policies. As discussed in detail in Section IV.D.4. of this Fact Sheet, the Discharger conducted an antidegradation analysis for the proposed increase in regulated discharge that is consistent with the antidegradation provisions of 40 CFR section 131.12 and State Water Board Resolution 68-16, and the Regional Water Board finds that allowing an increased regulated discharge provides a social and economical benefit to the people of the State.

3. **Anti-Backsliding Requirements.** Sections 402(o)(2) and 303(d)(4) of the CWA and federal regulations at title 40, Code of Federal Regulations section 122.44(l) prohibit backsliding in NPDES permits. These anti-backsliding provisions require that effluent limitations in a reissued permit must be as stringent as those in the previous permit, with some exceptions in which limitations may be relaxed. Compliance with the Anti-Backsliding requirements is discussed in Section IV.D.3.

4. ***Emergency Planning and Community Right to Know Act***. Section 13263.6(a), California Water Code, requires that "*the Regional Water Board shall prescribe effluent limitations as part of the waste discharge requirements of a POTW for all substances that the most recent toxic chemical release data reported to the state emergency response commission pursuant to Section 313 of the Emergency Planning and Community Right to Know Act of 1986 (42 U.S.C. Sec. 11023) (EPCRKA) indicate as discharged into the POTW, for which the State Water Board or the Regional Water Board has established numeric water quality objectives, and has determined that the discharge is or may be discharged at a level which will cause, have the reasonable potential to cause, or contribute to, an excursion above any numeric water quality objective*".

   The most recent toxic chemical data report does not indicate any reportable off-site

releases or discharges to the collection system for this facility. Therefore, a reasonable potential analysis based on information from Emergency Planning and Community Right to Know Act (EPCRA) cannot be conducted. Based on information from EPCRA, there is no reasonable potential to cause or contribute to an excursion above any numeric water quality objectives included within the Basin Plan or in any State Water Board plan, so no effluent limitations are included in this permit pursuant to CWC section 13263.6(a).

However, as detailed elsewhere in this Order, available effluent data indicate that there are constituents present in the effluent that have a reasonable potential to cause or contribute to exceedances of water quality standards and require inclusion of effluent limitations based on federal and state laws and regulations.

5. ***Stormwater Requirements*.** USEPA promulgated Federal Regulations for storm water on 16 November 1990 in 40 CFR Parts 122, 123, and 124. The NPDES Industrial Storm Water Program regulates storm water discharges from wastewater treatment facilities. Wastewater treatment plants are applicable industries under the stormwater program and are obligated to comply with the Federal Regulations.

6. ***Endangered Species Act.*** This Order does not authorize any act that results in the taking of a threatened or endangered species or any act that is now prohibited, or becomes prohibited in the future, under either the California Endangered Species Act (Fish and Game Code sections 2050 to 2097) or the Federal Endangered Species Act (16 U.S.C.A. sections 1531 to 1544). This Order requires compliance with effluent limits, receiving water limits, and other requirements to protect the beneficial uses of waters of the state. The Discharger is responsible for meeting all requirements of the applicable Endangered Species Act.

## D. Impaired Water Bodies on CWA 303(d) List

1. Under Section 303(d) of the 1972 Clean Water Act, states, territories and authorized tribes are required to develop lists of water quality limited segments. The waters on these lists do not meet water quality standards, even after point sources of pollution have installed the minimum required levels of pollution control technology. On July 25, 2003 USEPA gave final approval to California's 2002 Section 303(d) List of Water Quality Limited Segments. The Basin Plan references this list of Water Quality Limited Segments (WQLSs), which are defined as "…*those sections of lakes, streams, rivers or other fresh water bodies where water quality does not meet (or is not expected to meet) water quality standards even after the application of appropriate limitations for point sources (40 CFR 130, et seq.)*." The Basin Plan also states, "*Additional treatment beyond minimum federal standards will be imposed on dischargers to [WQLSs]. Dischargers will be assigned or allocated a maximum allowable load of critical pollutants so that water quality objectives can be met in the segment.*" The 2006 303(d) list for Putah Creek (Solano Lake to Putah Creek Sinks) includes mercury and metals. The Sacramento River (Knights Landing to the Delta) is 303(d) listed for diazinon, mercury, and unknown toxicity.

2. **Total Maximum Daily Loads.** The US EPA requires the Regional Water Board to develop total maximum daily loads (TMDLs) for each 303(d) listed pollutant and water body combination. Putah Creek is listed as an impaired water body for mercury and metals. The Order may be reopened if a TMDL program is established.

### E. Other Plans, Polices and Regulations

1. The discharge authorized herein and the treatment and storage facilities associated with the discharge of treated municipal wastewater, except for discharges of residual sludge and solid waste, are exempt from the requirements of Title 27, California Code of Regulations (CCR), section 20005 *et seq*. (hereafter Title 27). The exemption, pursuant to Title 27 CCR section 20090(a), is based on the following:

   a. The waste consists primarily of domestic sewage and treated effluent;

   b. The waste discharge requirements are consistent with water quality objectives; and

   c. The treatment and storage facilities described herein are associated with a municipal wastewater treatment plant.

2. The State Water Board adopted the *Water Quality Control Policy for the Enclosed Bays and Estuaries of California*. The requirements within this Order are consistent with the Policy.

## IV. RATIONALE FOR EFFLUENT LIMITATIONS AND DISCHARGE SPECIFICATIONS

Effluent limitations and toxic and pretreatment effluent standards established pursuant to Sections 301 (Effluent Limitations), 302 (Water Quality Related Effluent Limitations), 304 (Information and Guidelines), and 307 (Toxic and Pretreatment Effluent Standards) of the Clean Water Act (CWA) and amendments thereto are applicable to the discharge.

The Federal CWA mandates the implementation of effluent limitations that are as stringent as necessary to meet water quality standards established pursuant to state or federal law [33 U.S.C., § 1311(b)(1)(C); 40 CFR, § 122.44(d)(1)]. NPDES permits must incorporate discharge limits necessary to ensure that water quality standards are met. This requirement applies to narrative criteria as well as to criteria specifying maximum amounts of particular pollutants. Pursuant to Federal Regulations, 40 CFR Section 122.44(d)(1)(i), NPDES permits must contain limits that control all pollutants that "*are or may be discharged at a level which will cause, have the reasonable potential to cause, or contribute to an excursion above any state water quality standard, including state narrative criteria for water quality*." Federal Regulations, 40 CFR, §122.44(d)(1)(vi), further provide that "[w]*here a state has not established a water quality criterion for a specific chemical pollutant that is present in an effluent at a concentration that causes, has the reasonable potential to cause, or contributes to an excursion above a narrative criterion within an applicable State water quality standard, the permitting authority must*

*establish effluent limits.*"

The CWA requires point source discharges to control the amount of conventional, non-conventional, and toxic pollutants that are discharged into the waters of the United States. The control of pollutants discharged is established through effluent limitations and other requirements in NPDES permits. There are two principal bases for effluent limitations: 40 CFR §122.44(a) requires that permits include applicable technology-based limitations and standards, and 40 CFR §122.44(d) requires that permits include water quality-based effluent limitations to attain and maintain applicable numeric and narrative water quality criteria to protect the beneficial uses of the receiving water where numeric water quality objectives have not been established. The Regional Water Board's Basin Plan, page IV-17.00, contains an implementation policy ("Policy for Application of Water Quality Objectives" that specifies that the Regional Water Board "*will, on a case-by-case basis, adopt numerical limitations in orders which will implement the narrative objectives*." This Policy complies with 40 CFR §122.44(d)(1). With respect to narrative objectives, the Regional Water Board must establish effluent limitations using one or more of three specified sources, including (1) EPA's published water quality criteria, (2) a proposed state criterion (*i.e*., water quality objective) or an explicit state policy interpreting its narrative water quality criteria (*i.e*., the Regional Water Board's "Policy for Application of Water Quality Objectives")(40 CFR 122.44(d)(1)(vi) (A), (B) or (C)), or (3) an indicator parameter. The Basin Plan contains a narrative objective requiring that: "*All waters shall be maintained free of toxic substances in concentrations that produce detrimental physiological responses in human, plant, animal, or aquatic life*" (narrative toxicity objective). The Basin Plan requires the application of the most stringent objective necessary to ensure that surface water and groundwater do not contain chemical constituents, discoloration, toxic substances, radionuclides, or taste and odor producing substances that adversely affect beneficial uses. The Basin Plan states that material and relevant information, including numeric criteria, and recommendations from other agencies and scientific literature will be utilized in evaluating compliance with the narrative toxicity objective. The Basin Plan also limits chemical constituents in concentrations that adversely affect surface water beneficial uses. For waters designated as municipal, the Basin Plan specifies that, at a minimum, waters shall not contain concentrations of constituents that exceed Maximum Contaminant Levels (MCL) of CCR Title 22. The Basin Plan further states that, to protect all beneficial uses, the Regional Water Board may apply limits more stringent than MCLs.

## A. Discharge Prohibitions

1. *As stated in section I.G of Attachment D, Standard Provisions, this Order prohibits bypass from any portion of the treatment facility. Federal Regulations, 40 CFR 122.41 (m), define "bypass" as the intentional diversion of waste streams from any portion of a treatment facility. This section of the Federal Regulations, 40 CFR 122.41 (m)(4), prohibits bypass unless it is unavoidable to prevent loss of life, personal injury, or severe property damage. In considering the Regional Water Board's prohibition of bypasses, the State Water Board adopted a precedential decision, Order No. WQO*

*2002-0015, which cites the Federal Regulations, 40 CFR 122.41(m), as allowing bypass only for essential maintenance to assure efficient operation.*

## B. Technology-Based Effluent Limitations

### 1. Scope and Authority

Regulations promulgated in section 125.3(a)(1) require technology-based effluent limitations for municipal Dischargers to be placed in NPDES permits based on Secondary Treatment Standards or Equivalent to Secondary Treatment Standards.

The Federal Water Pollution Control Act Amendments of 1972 (PL 92-500) established the minimum performance requirements for POTWs [defined in section 304(d)(1)]. Section 301(b)(1)(B) of that Act requires that such treatment works must, as a minimum, meet effluent limitations based on secondary treatment as defined by the USEPA Administrator.

Based on this statutory requirement, USEPA developed secondary treatment regulations, which are specified in Part 133. These technology-based regulations apply to all municipal wastewater treatment plants and identify the minimum level of effluent quality attainable by secondary treatment in terms of biochemical oxygen demand ($BOD_5$), total suspended solids (TSS), and pH.

### 2. Applicable Technology-Based Effluent Limitations

a. **$BOD_5$ and TSS.** Federal Regulations, 40 CFR, Part 133, establish the minimum weekly and monthly average level of effluent quality attainable by secondary treatment for $BOD_5$ and TSS. Tertiary treatment is necessary to protect the beneficial uses of the receiving stream and the final effluent limitations for $BOD_5$ and TSS are based on the technical capability of the tertiary process. $BOD_5$ is a measure of the amount of oxygen used in the biochemical oxidation of organic matter. The secondary and tertiary treatment standards for $BOD_5$ and TSS are indicators of the effectiveness of the treatment processes. The principal design parameter for wastewater treatment plants is the daily $BOD_5$ and TSS loading rates and the corresponding removal rate of the system. In applying 40 CFR Part 133 for weekly and monthly average $BOD_5$ and TSS limitations, the application of tertiary treatment processes results in the ability to achieve lower levels for $BOD_5$ and TSS than the secondary standards currently prescribed; the 30-day average $BOD_5$ and TSS limitations have been revised to 10 mg/L, which is technically based on the capability of a tertiary system. In addition to the average weekly and average monthly effluent limitations, a daily maximum effluent limitation for $BOD_5$ and TSS is included in the Order to ensure that the treatment works are not organically overloaded and operate in accordance with design capabilities. See Table F-3 for final technology-based effluent limitations required by this Order. In addition, 40 CFR 133.102, in describing the minimum level of effluent quality attainable by secondary treatment, states that the 30-day average percent removal shall not be less than 85 percent. If 85 percent removal

of $BOD_5$ and TSS must be achieved by a secondary treatment plant, it must also be achieved by a tertiary (i.e., treatment beyond secondary level) treatment plant. This Order contains a limitation requiring an average of 85 percent removal of $BOD_5$ and TSS over each calendar month.

b. **Flow.** The wastewater treatment plant for the University of California, Davis was designed to provide a tertiary level of treatment for up to a design flow of 3.6 mgd. Therefore, this Order contains an Average Dry Weather Flow effluent limit of 3.6 mgd.

c. **pH.** Federal Regulations, 40 CFR Part 133, also establish technology-based effluent limitations for pH. The secondary treatment standards require the pH of the effluent to be no lower than 6.0 and no greater than 9.0 standard units.

**Summary of Technology-based Effluent Limitations**
**Discharge Points No. 001 & No. 002**

**Table F-3. Summary of Technology-based Effluent Limitations**

| Parameter | Units | Effluent Limitations | | | | |
|---|---|---|---|---|---|---|
| | | Average Monthly | Average Weekly | Maximum Daily | Instantaneous Minimum | Instantaneous Maximum |
| Flow | mgd | 3.6 | -- | -- | -- | -- |
| Biochemical oxygen demand, 5-day @ 20°C ($BOD_5$)[1] | mg/l | 10 | 15 | 20 | -- | -- |
| | lbs/day[2] | 300 | 450 | 600 | -- | -- |
| Total suspended solids (TSS)[1] | mg/l | 10 | 15 | 20 | -- | -- |
| | lbs/day[2] | 300 | 450 | 600 | -- | -- |
| pH | SU | -- | -- | -- | 6.0[3] | 9.0[3] |

[1] The average monthly percent removal of BOD 5-day 20°C and total suspended solids shall not be less than 85 percent.
[2] Based on an average dry weather flow of 3.6 mgd.
[3] More stringent water quality-based effluent limitations have been applied for pH in this Order.

## C. Water Quality-Based Effluent Limitations (WQBELs)

### 1. Scope and Authority

As specified in section 122.44(d)(1)(i), permits are required to include WQBELs for pollutants (including toxicity) that are or may be discharged at levels that cause, have reasonable potential to cause, or contribute to an in-stream excursion above any state water quality standard. The process for determining reasonable potential and calculating WQBELs when necessary is intended to protect the designated uses of the receiving water as specified in the Basin Plan, and achieve applicable water quality objectives and criteria that are contained in other state plans and policies, or any applicable water quality criteria contained in the CTR and NTR.

## 2. Applicable Beneficial Uses and Water Quality Criteria and Objectives

a. **Receiving Water.** The receiving stream is Putah Creek, a tributary to the Sacramento River. The beneficial uses of Putah Creek are described above in Section III.C.1 of this Fact Sheet.

b. **Hardness.** While no effluent limitation for hardness is necessary in this Order, hardness is critical to the assessment of the need for, and the development of, effluent limitations for certain metals. The *California Toxics Rule* and the *National Toxics Rule* contain water quality criteria for seven metals that vary as a function of hardness, the lower the hardness the lower the water quality criteria. The hardness-dependent metal criteria include cadmium, copper, chromium III, lead, nickel, silver, and zinc.

Effluent limitations for the discharge must be set to protect the beneficial uses of the receiving water for all discharge conditions. In the absence of the option of including condition-dependent, "floating" effluent limitations that are reflective of actual hardness conditions at the time of discharge, effluent limitations must be set using a reasonable worst-case condition in order to protect beneficial uses for all discharge conditions. The SIP does not address how to determine hardness for application to the equations for the protection of aquatic life when using hardness-dependent metals criteria. It simply states, in Section 1.2, that the criteria shall be properly adjusted for hardness using the hardness of the receiving water. The CTR requires that, for waters with a hardness of 400 mg/L (as $CaCO_3$), or less, the actual ambient hardness of the surface water must be used. It further requires that the hardness values used must be consistent with the design discharge conditions for design flows and mixing zones.[1] The CTR does not define whether the term "ambient," as applied in the regulations, necessarily requires the consideration of upstream as opposed to downstream hardness conditions.

The point in the receiving water affected by the discharge is downstream of the discharge. As the effluent mixes with the receiving water, the hardness of the receiving water can change. Therefore, it is appropriate to use the ambient hardness downstream of the discharge that is a mixture of the effluent and receiving water for the determination of the CTR hardness-dependent metals criteria. Recent studies indicate that using the lowest recorded receiving water hardness for establishing water quality criteria is not always protective of the receiving water under various mixing conditions (e.g. when the effluent hardness is less than the receiving water hardness). The studies evaluated the relationships between hardness and the CTR metals criterion that is calculated using the CTR metals equation. The equation describing the total recoverable regulatory criterion, as established in the CTR, is as follows:

[1] See 40 CFR 131.38(c)(4)(i)

$$\text{CTR Criterion} = e^{m[\ln(H)]+b} \qquad \text{(Equation 1)}$$

Where:

H = Design Hardness
b = metal- and criterion-specific constant
m = metal- and criterion-specific constant

The constants "m" and "b" are specific to both the metal under consideration, and the type of total recoverable criterion (i.e. acute or chronic). The metal-specific values for these constants are provided in the CTR at paragraph (b)(2), Table 1.

The relationship between the Design Hardness and the resulting criterion in Equation 1 can exhibit either a downward-facing (i.e., concave downward) or an upward-facing (i.e., concave upward) curve depending on the values of the criterion-specific constants. The curve shapes for acute and chronic criteria for the metals are as follows:

Concave Downward: cadmium (chronic), chromium (III), copper, nickel, and zinc

Concave Upward: cadmium (acute), lead, and silver (acute)

For those contaminants where the regulatory criteria exhibit a concave downward relationship as a function of hardness, use of the lowest recorded effluent hardness as receiving water hardness for establishment of water quality objectives is fully protective of all beneficial uses regardless of whether the effluent or receiving water hardness is higher. Use of the lowest recorded effluent hardness as receiving water hardness is also protective under all possible mixing conditions between the effluent and the receiving water (i.e., from high dilution to no dilution). Therefore, for cadmium (chronic), chromium (III), copper, nickel, and zinc, the reasonable worst-case ambient hardness can be estimated by using the lowest effluent hardness. The water quality criteria for these metals were calculated for this Order using Equation 1 and a reported minimum effluent hardness of 160 mg/L as CaCO3, based on 57 samples obtained by the Discharger between January 2004 and May 2007.

For those metals where the regulatory criteria exhibit a concave upward relationship as a function of hardness, water quality objectives based on either the effluent hardness or the receiving water hardness alone, would not be protective under all mixing scenarios. Instead, both the hardness of the upstream receiving water and the effluent is required to determine the reasonable worst-case ambient hardness. In this case, using the lowest upstream receiving water hardness in Equation 2, below, is protective if the effluent hardness is ALWAYS higher than the receiving water hardness. Under circumstances where the effluent hardness is not ALWAYS higher than the receiving water hardness, it may be appropriate to use the highest reported upstream receiving water hardness in Equation 2. The following equation

provides fully protective water quality criteria for those metals that exhibit a concave upward relationship.

$$\text{CTR Criterion} = \left[ \frac{m}{H_{rw}} \cdot \left( H_{eff} - H_{rw} \right) + 1 \right] \cdot e^{m \cdot \ln(H_{rw}) + b} \qquad \text{(Equation 2)}$$

Where:

$H_{eff}$ = effluent hardness
$H_{rw}$ = upstream receiving water hardness
b = metal- and criterion-specific constant
m = metal- and criterion-specific constant

Therefore, for cadmium (acute), lead, and silver (acute), water quality criteria were calculated using Equation 2 with a lowest reported effluent hardness of 160 mg/L as $CaCO_3$ and a highest reported upstream receiving water hardness of 840 mg/L as $CaCO_3$, based on 57 samples from January 2004 and May 2007.

## 3. Determining the Need for WQBELs

a. CWA section 301 (b)(1) requires NPDES permits to include effluent limitations that achieve technology-based standards and any more stringent limitations necessary to meet water quality standards. Water quality standards include Regional Water Board Basin Plan beneficial uses and narrative and numeric water quality objectives, State Water Board-adopted standards, and federal standards, including the CTR and NTR. The Basin Plan includes numeric site-specific water quality objectives and narrative objectives for toxicity, chemical constituents, and tastes and odors. The narrative toxicity objective states: "*All waters shall be maintained free of toxic substances in concentrations that produce detrimental physiological responses in human, plant, animal, or aquatic life.*" (Basin Plan at III-8.00.) With regards to the narrative chemical constituents objective, the Basin Plan states that waters shall not contain chemical constituents in concentrations that adversely affect beneficial uses. At minimum, "…*water designated for use as domestic or municipal supply (MUN) shall not contain concentrations of chemical constituents in excess of the maximum contaminant levels (MCLs)*" in Title 22 of CCR. The narrative tastes and odors objective states: "*Water shall not contain taste- or odor-producing substances in concentrations that impart undesirable tastes or odors to domestic or municipal water supplies or to fish flesh or other edible products of aquatic origin, or that cause nuisance, or otherwise adversely affect beneficial uses.*"

b. Federal regulations require effluent limitations for all pollutants that are or may be discharged at a level that will cause or have the reasonable potential to cause, or contribute to an in-stream excursion above a narrative or numerical water quality standard. Based on information submitted as part of the application, in studies, and as directed by monitoring and reporting programs, the Regional Water Board

finds that the discharge has a reasonable potential to cause or contribute to an in-stream excursion above a water quality standard for aluminum, ammonia, chloride, cyanide, nitrate + nitrite, selenium, specific conductance (EC), and total dissolved solids (TDS). Water quality-based effluent limitations (WQBELs) for these constituents are included in this Order. A summary of the reasonable potential analysis (RPA) is provided in Attachment G, and a detailed discussion of the RPA for each constituent is provided below.

c. The Regional Water Board conducted the RPA in accordance with Section 1.3 of the SIP. Although the SIP applies directly to the control of CTR priority pollutants, the State Water Board has held that the Regional Water Board may use the SIP as guidance for water quality-based toxics control.[2] The SIP states in the introduction "*The goal of this Policy is to establish a standardized approach for permitting discharges of toxic pollutants to non-ocean surface waters in a manner that promotes statewide consistency.*" Therefore, in this Order the RPA procedures from the SIP were used to evaluate reasonable potential for both CTR and non-CTR constituents.

d. WQBELs were calculated in accordance with section 1.4 of the SIP, as described in Attachment F, Section IV.C.4.

e. **Aluminum.** The Secondary Maximum Contaminant Level (MCL) for aluminum for the protection of the human health (MUN beneficial use) is 200 µg/L. In addition, the USEPA developed National Recommended Ambient Water Quality Criteria (NRAWQC) for protection of freshwater aquatic life for aluminum. The recommended four-day average (chronic) and one-hour average (acute) criteria for aluminum are 87 µg/L and 750 µg/L, respectively, for waters with a pH of 6.5 to 8.5. However, information contained in Footnote L to the NRAWQC summary table indicates that the development of the chronic criterion was based on specific receiving water conditions where there is low pH (6.5 to 6.8 pH units) and low hardness levels (< 10 mg/L as CaCO3). Monitoring data demonstrates that these conditions are not similar to those in Putah Creek, which has been measured to have a pH of 8.3 and hardness of 180 mg/L as $CaCO_3$.

   The MEC for aluminum was 251.80 µg/L, based on 66 samples collected between January 2003 and May 2007, while the maximum observed upstream receiving water aluminum concentration was 526 µg/L, based on 12 samples collected between January 2002 and December 2002. Therefore, aluminum in the discharge has a reasonable potential to cause or contribute to an in-stream excursion above a level necessary to protect the MUN beneficial use.

   Based on the above information, using the chronic criterion recommended in the NAWQC (87 µg/L) is not appropriate for the receiving water. Therefore, this Order contains final Average Monthly Effluent Limitations (AMEL) and Maximum Daily Effluent Limitations (MDEL) for aluminum of 276 µg/L and 750 µg/L, respectively, based on USEPA's National Ambient Water Quality Criteria for the

protection of freshwater aquatic life (See Attachment F, Table F-5 for WQBEL calculations). This Order also contains an annual average effluent limitation of 200 µg/L for aluminum, based on the Secondary MCL, for protection of the MUN beneficial use.

f. **Ammonia.** Untreated domestic wastewater contains ammonia. Nitrification is a biological process that converts ammonia to nitrite and nitrite to nitrate. Denitrification is a process that converts nitrate to nitrite or nitric oxide and then to nitrous oxide or nitrogen gas, which is then released to the atmosphere. The Discharger currently uses nitrification to remove ammonia from the waste stream. Inadequate or incomplete nitrification may result in the discharge of ammonia to the receiving stream. Ammonia is known to cause toxicity to aquatic organisms in surface waters. Discharges of ammonia would violate the Basin Plan narrative toxicity objective. Applying 40 CFR section122.44(d)(1)(vi)(B), it is appropriate to use USEPA's Ambient National Water Quality Criteria for the Protection of Freshwater Aquatic Life for ammonia, which was developed to be protective of aquatic organisms.

USEPA's *Ambient Water Quality Criteria for the Protection of Freshwater Aquatic Life*, for total ammonia, recommends acute (1-hour average; criteria maximum concentration) standards based on pH and chronic (30-day average, criteria continuous concentration) standards based on pH and temperature. It also recommends a maximum four-day average concentration of 2.5 times the criteria continuous concentration. USEPA found that as pH increased, both the acute and chronic toxicity of ammonia increased. Salmonids were more sensitive to acute toxicity effects than other species. However, while the acute toxicity of ammonia was not influenced by temperature, it was found that invertebrates and young fish experienced increasing chronic toxicity effects with increasing temperature. Because Putah Creek has a beneficial use of cold freshwater habitat and the presence of salmonids and early fish life stages in Putah Creek is well-documented, the recommended criteria for waters where salmonids and early life stages are present were used. USEPA's recommended criteria are show below:

$$CCC_{30-day} = \left( \frac{0.0577}{1+10^{7.688-pH}} + \frac{2.487}{1+10^{pH-7.688}} \right) \times MIN\left(2.85, 1.45 \cdot 10^{0.028(25-T)}\right), \text{ and}$$

$$CMC = \left( \frac{0.275}{1+10^{7.204-pH}} + \frac{39.0}{1+10^{pH-7.204}} \right),$$

where $T$ is in degrees Celsius

The temperature of the effluent and receiving streams vary seasonally. As requested by the Discharger, this Order contains seasonal limitations for ammonia.

The maximum permitted effluent pH is 8.5. The Basin Plan objective for pH in the receiving stream is in the range of 6.5 to 8.5.

Acute and chronic ammonia toxicity criteria were calculated using data from 1 May through 31 October (summer) and 1 November through 30 April (winter) for receiving water pH and temperature.

An acute ammonia toxicity criterion was calculated using the maximum observed effluent pH value of 8.5 pH units and the CMC equation based on the salmonids present. The resulting CMC for ammonia is 2.14 mg/L.

The 30-day average CCC is calculated using the temperature and pH of the receiving water. Using effluent data from 1 May through 31 October and 1 November through 30 April, the CCC was calculated for each day when temperature and pH were measured. The lowest 99.9% 30-day average CCC was 0.61 mg/L from 1 May through 31 October and 1.17 mg/L from 1 November through 30 April. The corresponding pH used was 8.45 from 1 May through 31 October and 8.33 from 1 November through 30 April.

The 4-day average concentration is derived in accordance with the USEPA criterion as 2.5 times the 30-day CCC. Based on the 30-day CCC of 0.61 mg/L and 1.17 mg/L, the 4-day average concentration that should not be exceeded is 1.52 mg/L from 1 May through 31 October and 2.93 mg/L from 1 November through 30 April.

Ammonia is a non-CTR constituent and WQBELS are calculated in accordance with SIP procedures for non-CTR constituents. The SIP procedure assumes a 4-day averaging period for calculating the long-term average discharge condition (LTA). USEPA recommends modifying the procedure for calculating permit limits for ammonia using a 30-day averaging period for the calculation of the LTA corresponding to the 30-day chronic criteria. While the LTAs corresponding to the acute and 4-day chronic criteria were calculated according to SIP procedures, the LTA corresponding to the 30-day chronic criteria was calculated assuming a 30-day averaging period. The lowest LTA representing the acute 4-day averaging and 30-day chronic criteria is then selected for deriving the AMEL and MDEL. The remainder of the WQBEL calculation for ammonia was performed according to the SIP procedures.

This Order contains seasonal AMELs and MDELs for ammonia of 0.74 mg/L and 1.53 mg/L from 1 May through 31 October and 1.11 mg/L and 2.14 mg/L from 1 November through 30 April, respectively, based on the USEPA's National Ambient Water Quality Criteria for the Protection of Freshwater Aquatic Life (see Attachment F-6 for the WQBEL calculations for ammonia).

g. **Chlorine Residual.** The Discharger has not used chlorine, which is extremely toxic to aquatic organisms, for disinfection in the treatment process or for cleaning the facility since January 2003. The Discharger now uses an ultraviolet (UV) light disinfection system prior to discharge to Putah Creek. However, the

Discharger would like to reserve the option to use chlorine for cleaning and maintenance purposes on the new disc filter. Since the Discharger requested the use of chlorine for maintenance purposes, the discharge has a reasonable potential to cause or contribute to an in-stream excursion above the Basin Plan's narrative toxicity objective. A monitoring requirement is required for instances when chlorine is used for maintenance purposes.

The USEPA Technical Support Document for Water Quality-Based Toxics Control [EPA/505/2-90-001] contains statistical methods for converting chronic (four-day) and acute (one-hour) aquatic life criteria to average monthly and maximum daily effluent limitations based on the variability of the existing data and the expected frequency of monitoring. However, because chlorine is an acutely toxic constituent that can be monitored continuously, an average one-hour limitation is considered more appropriate than an average daily limitation. Average one-hour and four-day limitations for chlorine, based on these criteria, are included in this Order. The Discharger can immediately comply with these new effluent limitations for chlorine residual.

The chlorine residual limitations required in this Order are protective of aquatic organisms in the undiluted discharge. If compliance is maintained, the Regional Water Board does not anticipate residual chlorine impacts to benthic organisms.

h. **Copper.** The CTR includes hardness-dependent criteria for the protection of freshwater aquatic life for copper. The criteria for copper are presented in dissolved concentrations. USEPA recommends conversion factors to translate dissolved concentrations to total concentrations. The USEPA default conversion factors for copper in freshwater are 0.96 for both the acute and the chronic criteria. Using an estimated reasonable worst-case ambient hardness, as described in Section IV.C.2.b., above, 160 mg/L as $CaCO_3$ and the USEPA recommended dissolved-to-total translator, the applicable chronic criterion (maximum four-day average concentration) is 14 µg/L and the applicable acute criterion (maximum one-hour average concentration) is 22 µg/L, as total recoverable.

The MEC for total copper was 10.0 µg/L, based on 43 samples collected between August 2004 and May 2007, while the maximum observed upstream receiving water total copper concentration was 6.0 µg/L, based on 12 samples collected between January 2002 and December 2002. Therefore, the discharge does not demonstrate reasonable potential to cause or contribute to an in-stream excursion above the CTR criteria for copper.

The previous Order required effluent limitations for copper. However, based on new information and the procedures established in Section 1.3 of the SIP for determining reasonable potential, the discharge no longer demonstrates reasonable potential to exceed water quality criteria for copper. Therefore, effluent limitations for copper are no longer necessary. The removal of the effluent limitations for copper is in compliance with 40 CFR 122.44(l)(2)(i)(B)(1).

i. **Cyanide.** The CTR includes maximum 1-hour average and 4-day average cyanide concentrations of 22 µg/L and 5.2 µg/L, respectively, for the protection of freshwater aquatic life. The MEC for cyanide was 6.1 µg/L, based on 59 samples collected between January 2003 and May 2007, while the maximum observed upstream receiving water cyanide concentration was 6.7 µg/L, based on 12 samples collected between January 2003 and May 2007. Therefore, the discharge has a reasonable potential to cause or contribute to an in-stream excursion above the CTR criteria for cyanide. An AMEL and MDEL for cyanide of 4.3 µg/L and 8.5 µg/L, respectively, are included in this Order based on CTR criteria for the protection of freshwater aquatic life (See Attachment F, Table F-7 for WQBEL calculations).

j. **Dichloromethane.** The human health criteria for dichloromethane is 4.7 µg/L for water and organisms. The MEC for dichloromethane was 1.70 µg/L, based on 20 samples collected between February 2003 and May 2007, while the maximum observed upstream receiving water dichloromethane concentration was 2.0 µg/L, based on 12 samples collected between January 2002 and December 2002. Therefore, the discharge does not demonstrate reasonable potential to cause or contribute to an in-stream excursion above the CTR criteria for dichloromethane

The previous Order required effluent limitations for dichloromethane. However, based on new information and the procedures established in Section 1.3 of the SIP for determining reasonable potential, the discharge no longer demonstrates reasonable potential to exceed water quality criteria for dichloromethane. Therefore, effluent limitations for dichloromethane are no longer necessary. The removal of the effluent limitations for dichloromethane is in compliance with 40 CFR 122.44(l)(2)(i)(B)(1).

k. **Dioxin/Furans.** Dioxin/furans was never detected in the effluent, based on 11 sampling periods between March 2004 through January 2007, while the maximum observed upstream receiving water dioxin/furan concentration was 0.0005 pg/L, based on 12 samples collected between January 2002 and December 2002. Therefore, the discharge does not demonstrate reasonable potential to cause or contribute to an in-stream excursion above the CTR criteria.

The previous Order required effluent limitations for dioxin/furans of 0.14 pg/l. The effluent has not been observed to exceed the narrative objective for settleable solids in the Basin Plan. Therefore, effluent limitations for dioxin/furans are no longer necessary. The removal of the effluent limitations for dioxin/furans is in compliance with 40 CFR 122.44(l)(2)(i)(B)(1).

l. **Electrical Conductivity. (see Subsection p. Salinity)**

m. **Iron.** The Basin Plan (Table III-1) contains a water quality objective of 300 µg/L for dissolved iron as a site-specific objective for the Delta. USEPA recommends conversion factors to translate dissolved concentrations to total concentrations. Since there is no dissolved-to-total metal translator available for iron, it was assumed that the translator is equal to 1.

The MEC for iron was 145 µg/L, based on 55 samples collected between February 2003 and May 2007, and the maximum reported background receiving water iron concentration was 988 µg/L. The discharge has a reasonable potential to cause or contribute to an in-stream excursion above the Basin Plan's site-specific objective for iron. However, iron is a secondary MCL constituent in which the threat being protected against is a chronic, long term threat and not an acute threat. Although the iron concentration in the receiving stream is above the criteria, the effluent concentration is low enough in which it does not appear to be the potential cause for exceedance to the water quality criteria, especially one in which the resulting limitation is implemented as an annual average. Therefore, no effluent limitation for iron is included in this Order.

n. **Lead.** The CTR includes hardness-dependant criteria for the protection of freshwater aquatic life for lead. The criteria for lead are presented in dissolved concentrations. USEPA recommends conversion factors to translate dissolved concentrations to total concentrations. The USEPA default conversion factors for copper in freshwater are 1.27 for both the acute and the chronic criteria. Using and estimated reasonable worst-case ambient hardness, as described in Section IV.C.2.b., above, 160 mg/L as $CaCO_3$ and the USEPA recommended dissolved-to-total translator, the applicable chronic criterion (maximum four-day average concentration) is 4 µg/L and the applicable acute criterion (maximum one-hour average concentration) is 107 µg/L, as total recoverable.

The MEC for lead was 0.49 µg/L, based on 56 samples collected between February 2003 and May 2007, while the maximum observed upstream receiving water lead concentration was 2.10 µg/L, based on 12 samples collected between January 2002 and December 2002. Therefore, the discharge does not demonstrate reasonable potential to cause or contribute to an in-stream excursion above the CTR criteria for lead.

The previous Order required effluent limitations for lead. However, based on new information and the procedures established in Section 1.3 of the SIP for determining reasonable potential, the discharge no longer demonstrates reasonable potential to exceed water quality criteria for lead. Therefore, effluent limitations for lead are no longer necessary. The removal of the effluent limitations for lead is in compliance with 40 CFR 122.44(l)(2)(i)(B)(1).

o. **Manganese.** The secondary MCL – consumer acceptance limit for manganese is 50 µg/L. The MEC for manganese was 3 µg/L, based on 10 samples collected between February 2003 and May 2007, and the maximum reported background receiving water manganese concentration was 83.7 µg/L. The discharge has reasonable potential to cause or contribute to an in-stream excursion above the Basin Plan's site-specific objective for manganese. However, manganese is a secondary MCL constituent in which the threat being protected against is a chronic, long term threat and not an acute threat. Although the manganese concentration in the receiving stream is above the criteria, the average effluent concentration is low enough in which it does not appear to be the potential cause

for exceedance to the water quality criteria that is implemented as an annual average. Therefore, no effluent limitation for manganese is included in this Order.

p. **Mercury, Total.** The current USEPA Ambient Water Quality Criteria for Protection of Freshwater Aquatic Life, continuous concentration, for mercury is 0.77 µg/L (30-day average, chronic criteria). The CTR contains a human health criterion of 0.050 µg/L for waters from which both water and aquatic organisms are consumed. Both values are controversial and subject to change. In 40 CFR Part 131, USEPA acknowledges that the human health criteria may not be protective of some aquatic or endangered species and that "…*more stringent mercury limits may be determined and implemented through use of the State's narrative criterion.*" In the CTR, USEPA reserved the mercury criteria for freshwater and aquatic life and may adopt new criteria at a later date. The maximum observed effluent mercury concentration was 0.0093 µg/L. Putah Creek has been listed as an impaired water body pursuant to Section 303(d) of the Clean Water Act because of mercury. Mercury bioaccumulates in fish tissue and, therefore, discharge of mercury to the receiving water is likely to contribute to exceedances of the narrative toxicity objective and impacts on beneficial uses. Because Putah Creek has been listed as an impaired water body for mercury, the discharge must not cause or contribute to increased mercury levels. The SIP, Section 1.3, requires the establishment of an effluent limitation for a constituent when the receiving stream background water quality exceeds an applicable criterion or objective.

Regional Water Board staff is currently developing a TMDL for methylmercury for the Sacramento-San Joaquin Delta. The SIP recommends the Regional Water Board consider whether the mass loading of bioaccumulative pollutants should be limited in the interim to "*representative current levels*" pending development of applicable water quality standards or TMDL allocation. The intent is, at a minimum, to prevent further impairment while a TMDL for a particular bioaccumulative constituent is being developed. Any increase in loading of mercury to an already impaired water body would further degrade water quality.

This Order contains an interim performance-based mass Effluent Limitation of 0.10 lbs/year for total mercury for the effluent discharge to Putah Creek. This limitation is based on maintaining the mercury loading at the current level until a total maximum daily load (TMDL) can be established and USEPA develops mercury standards that are protective of human health. The mass limitation was derived using the maximum observed effluent mercury concentration and the reported average dry weather flow rate. If USEPA develops new water quality standards for mercury, this permit may be reopened and the Effluent Limitations adjusted.

q. **Nitrite and Nitrate.** Untreated domestic wastewater contains ammonia. Nitrification is a biological process that converts ammonia to nitrite and nitrite to nitrate. Denitrification is a process that converts nitrate to nitrite or nitric oxide and then to nitrous oxide or nitrogen gas, which is then released to the

atmosphere. Nitrate and nitrite are known to cause adverse health effects in humans. The California DHS has adopted Primary MCLs at Title 22 of the California Code of Regulations (CCR), Table 64431-A, for the protection of human health for nitrite and nitrate that are equal to 1 mg/L and 10 mg/L (measured as nitrogen), respectively. Title 22 CCR, Table 64431-A, also includes a primary MCL of 10,000 µg/L for the sum of nitrate and nitrite, measured as nitrogen.

USEPA has developed a primary MCL and an MCL goal of 1,000 µg/L for nitrite (as nitrogen). For nitrate, USEPA has developed Drinking Water Standards (10,000 µg/L as Primary Maximum Contaminant Level) and Ambient Water Quality Criteria for protection of human health (10,000 µg/L for non-cancer health effects). Recent toxicity studies have indicated a possibility that nitrate is toxic to aquatic organisms.

Inadequate or incomplete denitrification may result in the discharge of nitrate and/or nitrite to the receiving stream. The conversion of ammonia to nitrites and the conversion of nitrites to nitrates present a reasonable potential for the discharge to cause or contribute to an in-stream excursion above the Primary MCLs for nitrite and nitrate. AMEL for nitrite + nitrate of 10 mg/L, respectively, is included in this Order based on the MCLs. These effluent limitations are included in this Order to assure the treatment process adequately nitrifies and denitrifies the waste stream to protect the beneficial use of municipal and domestic supply.

r. **Pathogens**. The beneficial uses of Putah Creek include municipal and domestic supply, water contact recreation, and agricultural irrigation supply, and there is, at times, less than 20:1 dilution. To protect these beneficial uses, the Regional Water Board finds that the wastewater must be disinfected and adequately treated to prevent disease. The principal infectious agents (pathogens) that may be present in raw sewage may be classified into three broad groups: bacteria, parasites, and viruses. Tertiary treatment, consisting of chemical coagulation, sedimentation, and filtration, has been found to remove approximately 99.5% of viruses. Filtration is an effective means of reducing viruses and parasites from the waste stream. The wastewater must be treated to tertiary standards (filtered), or equivalent, to protect contact recreational and food crop irrigation uses.

The California Department of Public Health (DPH) has developed reclamation criteria, CCR, Division 4, Chapter 3 (Title 22), for the reuse of wastewater. Title 22 requires that for spray irrigation of food crops, parks, playgrounds, schoolyards, and other areas of similar public access, wastewater be adequately disinfected, oxidized, coagulated, clarified, and filtered, and that the effluent total coliform levels not exceed 2.2 MPN/100 m/ as a 7-day median. As coliform organisms are living and mobile, it is impracticable to quantify an exact number of coliform organisms and to establish weekly average limitations. Instead, coliform organisms are measured as a most probable number and regulated based on a 7-day median limitation.

Title 22 also requires that recycled water used as a source of water supply for non-restricted recreational impoundments be disinfected tertiary recycled water that has been subjected to conventional treatment. A non-restricted recreational impoundment is defined as "*…an impoundment of recycled water, in which no limitations are imposed on body-contact water recreational activities.*" Title 22 is not directly applicable to surface waters; however, the Regional Water Board finds that it is appropriate to apply an equivalent level of treatment to that required by DPH's reclamation criteria because the receiving water is used for irrigation of agricultural land and for contact recreation purposes. The stringent disinfection criteria of Title 22 are appropriate since the undiluted effluent may be used for the irrigation of food crops and/or for body-contact water recreation. Coliform organisms are intended as an indicator of the effectiveness of the entire treatment train and the effectiveness of removing other pathogens. The method of treatment is not prescribed by this Order; however, wastewater must be treated to a level equivalent to that recommended by DPH.

In addition to coliform testing, turbidity specifications have been included as a second indicator of the effectiveness of the treatment process and to assure compliance with the required level of treatment. The previous Order established effluent limitations for turbidity, based on DPH's Title 22 requirements, including a daily average of 2 nephelometric turbidity units (NTU). The previous Order also prohibited the effluent from exceeding 5 NTU more than 5 percent of the time, and prohibited the effluent from exceeding 10 NTU at any given time if the effluent was continuously monitored. Failure of the filtration system such that virus removal is impaired could result in increased particles in the effluent, which result in higher effluent turbidity. Turbidity has a major advantage for monitoring filter performance, allowing immediate detection of filter failure and rapid corrective action. Coliform testing, by comparison, is not conducted continuously and requires several hours, to days, to identify high coliform concentrations. The limitations in the previous Order were solely an operational check to ensure the treatment system was functioning properly. The effluent limitations were not intended to regulate turbidity discharged to the receiving water. Rather, turbidity should be an operational parameter to determine proper system function and not a WQBEL. Therefore, to ensure compliance with the DPH recommended Title 22 disinfection criteria, this Order contains operational turbidity specifications to be met prior to disinfection in lieu of effluent limitations.

This Order requires a tertiary level of treatment, or equivalent, necessary to protect the beneficial uses of the receiving water. The Regional Water Board has previously considered the factors in CWC section 13241.

s. **pH.** The Basin Plan includes a water quality objective for surface waters (except for Goose Lake) that the "*…pH shall not be depressed below 6.5 nor raised above 8.5. Changes in normal ambient pH levels shall not exceed 0.5 in fresh waters with designated COLD or WARM beneficial uses.*" Effluent Limitations for pH are included in this Order based on the Basin Plan objectives for pH.

t. **Salinity.** The discharge contains total dissolved solids (TDS), chloride, sulfate, and electrical conductivity (EC). These are water quality parameters that are indicative of the salinity of the water. Their presence in water can be growth limiting to certain agricultural crops and can affect the taste of water for human consumption. There are no USEPA water quality criteria for the protection of aquatic organisms for these constituents. The Basin Plan contains a chemical constituent objective that incorporates State MCLs, contains a narrative objective, and contains numeric water quality objectives for EC, TDS, Sulfate, and Chloride.

**Table F-4. Salinity Water Quality Criteria/Objectives**

| Parameter | Agricultural WQ Goal[1] | Secondary MCL[3] | Effluent | |
|---|---|---|---|---|
| | | | Avg | Max |
| EC (µmhos/cm) | 700[2] | 900, 1600, 2200 | 1091 | 1679 |
| TDS (mg/L) | 450[2] | 500, 1000, 1500 | 634 | 848 |
| Sulfate (mg/L) | N/A | 250, 500, 600 | 44 | 49 |
| Chloride (mg/L) | 106[2] | 250, 500, 600 | 149 | 195 |

1 Agricultural water quality goals based on *Water Quality for Agriculture*, Food and Agriculture Organization of the United Nations—Irrigation and Drainage Paper No. 29, Rev. 1 (R.S. Ayers and D.W. Westcot, Rome, 1985)

2 Agricultural water quality goals listed provide no restrictions on crop type or irrigation methods for maximum crop yield. Higher concentrations may require special irrigation methods to maintain crop yields or may restrict types of crops grown.

3 The secondary MCLs are stated as a recommended level, upper level, and a short-term maximum level.

i. **Chloride**. The secondary MCL for chloride is 250 mg/L, as recommended level, 500 mg/L as an upper level, and 600 mg/L as a short-term maximum. The recommended agricultural water quality goal for chloride, that would apply the narrative chemical constituent objective, is 106 mg/L as a long-term average based on Water Quality for Agriculture, Food and Agriculture Organization of the United Nations—Irrigation and Drainage Paper No. 29, Rev. 1 (R.S. Ayers and D.W. Westcot, Rome, 1985). The 106 mg/L water quality goal is intended to protect against adverse effects on sensitive crops when irrigated via sprinklers.

Chloride concentrations in the effluent ranged from 97.6 mg/L to 195.4 mg/L, with an average of 149.2 mg/L, for 11 samples collected by the Discharger from March 2004 through January 2007. Background concentrations in Putah Creek ranged from 11 mg/L to 35 mg/L, with an average of 20.3 mg/L, for 12 samples collected by the Discharger from January 2002 through December 2002. The effluent exceeds the agricultural water quality goal of 106 mg/L.

ii. **Electrical Conductivity (EC)**. The secondary MCL for EC is 900 µmhos/cm as a recommended level, 1,600 µmhos/cm as an upper level, and 2,200 µmhos/cm as a short-term maximum. The agricultural water quality goal, that would apply the narrative chemical constituents objective, is 700 µmhos/cm as a long-term average based on Water Quality for Agriculture, Food and Agriculture Organization of the United Nations—Irrigation and Drainage Paper No. 29, Rev. 1 (R.S. Ayers and D.W. Westcot, Rome, 1985). The 700 µmhos/cm agricultural water quality goal is intended to prevent reduction in crop yield, i.e. a restriction on use of water, for salt-sensitive crops, such as beans, carrots, turnips, and strawberries. These crops are either currently grown in the area or may be grown in the future. Most other crops can tolerate higher EC concentrations without harm, however, as the salinity of the irrigation water increases, more crops are potentially harmed by the EC, or extra measures must be taken by the farmer to minimize or eliminate any harmful impacts.

A review of the Discharger's monitoring reports from January 2003 through May 2007 shows an average monthly effluent EC of 1,091 µmhos/cm, with a range from 103 µmhos/cm to 1,679 µmhos/cm for 1,594 samples. These levels exceed the applicable objectives. The background receiving water EC averaged 476 µmhos/cm in 746 sampling events collected by the Discharger from January 2004 through May 2007.

A performance based interim limit of 1,400 µmhos/cm is added to this Order is accordance with current Regional Water Board management guidance. This is in compliance with antibacksliding regulations and antidgeradation policy, since circumstances on which the previous Order No. R5-2003-0003, Amendment No. 1 was based have materially and substantially changed since the permit was issued and the Discharger was never able to comply with the previous limitation of 900 µmhos/cm. The Discharger has also conducted several studies to identify and minimize salinity sources and has found that it will be necessary to change water supplies to meet the secondary MCL of 900 µmhos/cm, which could take many years to accomplish.

iii. **Sulfate**. The secondary MCL for sulfate is 250 mg/L as recommended level, 500 mg/L as an upper level, and 600 mg/L as a short-term maximum. Sulfate concentrations in the effluent ranged from 38 mg/L to 49 mg/L, with an average of 44 mg/L, for 11 samples collected by the Discharger from March 2004 through January 2007. Background concentrations in Putah Creek ranged from 18 mg/L to 48 mg/L, with an average of 33 mg/L, for 12 samples collected by the Discharger from January 2002 through December 2002. The effluent does not exceed the secondary MCL recommended level of 250 mg/L.

iv. **Total Dissolved Solids (TDS)**. The secondary MCL for TDS is 500 mg/L as a recommended level, 1000 mg/L as an upper level, and 1500 mg/L as a

short-term maximum. The recommended agricultural water quality goal for TDS, that would apply the narrative chemical constituent objective, is 450 mg/L as a long-term average based on Water Quality for Agriculture, Food and Agriculture Organization of the United Nations—Irrigation and Drainage Paper No. 29, Rev. 1 (R.S. Ayers and D.W. Westcot, Rome, 1985). Water Quality for Agriculture evaluates the impacts of salinity levels on crop tolerance and yield reduction, and establishes water quality goals that are protective of the agricultural uses. The 450 mg/L water quality goal is intended to prevent reduction in crop yield, i.e. a restriction on use of water, for salt-sensitive crops. Only the most salt sensitive crops require irrigation water of 450 mg/L or less to prevent loss of yield. Most other crops can tolerate higher TDS concentrations without harm, however, as the salinity of the irrigation water increases, more crops are potentially harmed by the TDS, or extra measures must be taken by the farmer to minimize or eliminate any harmful impacts.

The average TDS effluent concentration was 634 mg/L and a ranged from 560 mg/L to 848 mg/L for 61 samples collected by the Discharger from January 2003 through May 2007. These concentrations exceed the applicable water quality objectives. The background receiving water TDS ranged from 246 mg/L to 384 mg/L, with an average of 303 mg/L in 12 sampling events performed by the Discharger from January 2002 through December 2002.

v. **Salinity Effluent Limitations.** Effluent limitations based on the MCL or the agricultural water quality goal would likely require construction and operation of a reverse osmosis treatment plant. The State Water Board, in Water Quality Order 2005-005 (for the City of Manteca), states, *"…the State Board takes official notice [pursuant to Title 23 of California Code of Regulations, Section 648.2] of the fact that operation of a large-scale reverse osmosis treatment plant would result in production of highly saline brine for which an acceptable method of disposal would have to be developed. Consequently, any decision that would require use of reverse osmosis to treat the City's municipal wastewater effluent on a large scale should involve thorough consideration of the expected environmental effects."* The State Water Board states in that Order, "*Although the ultimate solutions to southern Delta salinity problems have not yet been determined, previous actions establish that the State Board intended for permit limitations to play a limited role with respect to achieving compliance with the EC water quality objectives in the southern Delta.*" The State Water Board goes on to say, "*Construction and operation of reverse osmosis facilities to treat discharges…prior to implementation of other measures to reduce the salt load in the southern Delta, would not be a reasonable approach.*"

The Regional Water Board, with cooperation of the State Water Board, has begun the process to develop a new policy for the regulation of salinity in the Central Valley. In a statement issued at the 16 March 2006, Regional Water

Board meeting, Board Member Dr. Karl Longley recommended that the Regional Water Board continue to exercise its authority to regulate discharges of salt to minimize salinity increases within the Central Valley. Dr. Longley stated, "*The process of developing new salinity control policies does not, therefore, mean that we should stop regulating salt discharges until a salinity Policy is developed. In the meantime, the Board should consider all possible interim approaches to continue controlling and regulating salts in a reasonable manner, and encourage all stakeholder groups that may be affected by the Regional Board's policy to actively participate in policy development.*"

The Antidegradation Policy (Resolution No. 68-16) requires that the Discharger implement best practicable treatment or control (BPTC) of its discharge. For salinity, the Regional Water Board is considering limiting effluent salinity of municipal wastewater treatment plants to an increment of 500 µmhos/cm over the salinity of the municipal water supply as representing BPTC, or based on the results of a site-specific receiving water study. This Order includes an interim performance-based effluent limitation of 1,400 µmhos/cm for EC to protect the receiving water from further salinity degradation, but no final effluent limitation because sufficient site-specific information does not exist. Final effluent limitations for salinity based on BPTC, and site-specific salinity levels necessary to support beneficial uses, will be established subsequent to the collection and analysis by the Discharger of EC in the Discharger's water supply and beneficial uses of the receiving streams. This Order requires quarterly monitoring of EC and TDS of the Discharger's water supply (see Attachment E, Section IX.A).

This Order also requires the Discharger to study salinity reduction measures to reduce the salinity in its discharge to the North and South Fork of Putah Creek. Specifically, Special Provision VI.C.1.f. of this Order requires the Discharger to complete and submit a Salinity/EC – Site Specific Study and Special Provision VI.C.2.b. requires the Discharger to report on results of a site-specific investigation of appropriate EC levels to protect agricultural beneficial use in areas irrigated with water from Putah Creek diverted downstream from the discharge.

The Discharger has conducted the following studies in an effort to evaluate methods to reduce salinity in its effluent:

1. *An Approach to Develop Site-Specific Criteria for Electrical Conductivity to Protect Agricultural Beneficial Uses that Accounts for Rainfall (July 2004)* – This study identified site-specific objectives for EC that were reasonably protective of the agricultural supply beneficial uses of Putah Creek, concluding that in several short-term (5-year) runs representing relative dry and average rainfall conditions, irrigation water with an EC range of 1,100-1,200 µmhos/cm satisfied the underlying goal of not impacting crop yield. The study considered crop yield reductions of up to 10% to be

insignificant, which is an inappropriate assumption for Basin Plan objectives or site-specific criteria. The study was not approved by Regional Water Board staff.

2. *Draft Salt Reduction and Source Control Alternatives Study for the UC Davis Central Heating a Cooling Plant (17 September 2004)* - The study identified four alternatives: (1) haul the brine waste to East Bay Municipal Utility District (EBMUD) for treatment, (2) replace the existing softener with a reverse osmosis system, (3) replace the existing softener with a deionizer system, and (4) re-pipe the existing softener with a lead/lag configuration to reduce the regeneration frequency in the softeners and the overall salt use. The report projected that none of these alternatives would result in an effluent that met the 900 µmhos/cm EC limit. The study concluded that hauling the salt brine would yield the highest salt reduction (12%), but it was the most expensive choice at an annual cost of $844,000.

3. *Technical Memorandum: Expanded Campus Salt Study for Salt Reduction and Source Control Evaluation (11 March 2005)* - This expanded study identified potential salt sources to evaluate, reducing the percentage of unaccounted sources from 35% to 9%. The major salt sources (Central Heating and Cooling Plant, domestic wastewater, and well water supply) for the University each contribute approximately one-quarter of the total WWTP effluent salt. The recommendation of the study was to continue monitoring salt content in the wastewater and periodic re-evaluation of the total salt from campus sources to track the effectiveness of the source control and the improvement in the WWTP EC concentration.

4. *Technical Memorandum: EC Investigation Summary (23 March 2007)* - A summary of the EC investigation initiated by the UC Davis Facility staff to identify target areas for additional study to potentially reduce salt discharges to the campus sanitary sewer system. This EC investigation collected data from sanitary sewer manholes and buildings located throughout the UC Davis campus. The study confirmed the large contributors of salt identified to be: (1) Central Heating and Cooling Plant, (2) Primate Center, (3) and Hopkins Road Pump Station.

5. *Reduction of Water Cycling in Cooling Towers* – The campus cooling towers cycle treated domestic water through their evaporative systems for cooling. With evaporation, the salt levels increase. The water is continuously blown down to the sewer to prevent excessive scaling in the towers. The systems are run to balance water use, chemical use, and scaling. The total dissolved solids (TDS) are monitored through the process control in the large cooling towers. When the TDS in the circulating water rises above the set point, more make-up water is added and the overflow drains to the sewer. The optimum set point for the cooling tower is around 3-6 cycles of concentration (i.e., the EC in the

blow down is 3-6 times higher than the source water). A reduction in cycles allows for decreased EC in the discharge, but greatly increases water use and sewer flows. Potential changes to the WWTP EC levels were found to have relatively minor improvements. From a mass-balance perspective, more salt is introduced into the environment at a slightly lower concentration by using more fresh water for dilution. The University concluded that reduction in water cycling is not a feasible solution and that switching technologies to something other than traditional cooling towers might be the solution, but a suitable technology has not been found yet.

The final conclusion of all these studies was that although some salinity reduction could be accomplished at the Heating and Cooling Plant, the largest contributor to the salinity of the wastewater discharge is the domestic water supply. The Discharger is conducting the following efforts to reduce salt in the discharge:

1. *Installation of Reverse Osmosis Units at the Central Heating and Cooling Plant* - the University is in the process of replacing existing large water softeners at the Central Heating and Cooling Plant with reverse osmosis units to pre-treat its industrial source water. This project expects to eliminate a large source of salt loading to the Facility, with effluent EC levels anticipated to drop by over 100 µmhos/cm once the new system is online by the end of 2008.

2. *Solano Project Water*- the University recently made a decision to explore options to construct a surface water treatment plant on campus and use the treated water for domestic purposes. The surface water from the Solano Project is lower in TDS and EC (an average of 204 mg/l and 315 µmhos/cm respectively) than from the deep aquifers that the University currently gets their domestic water. The University strongly supports moving this project forward, but no formal commitment has been made given that the capital cost is projected to be in the $9-11M range.

3. *Davis-Woodland Surface Water Project* - The Davis-Woodland Surface Water Project is a long-term project which is looking at obtaining surface water from the Sacramento River as a new water supply. This is a collaborative effort between the cities of Davis and Woodland and UC Davis. The University has not made a formal commitment to fund the project at this point. The addition of this new water supply would reduce EC levels at the Facility.

u. **Selenium.** The NTR 4-day average (chronic) water quality criteria for the protection of aquatic life is 5 µg/L. The MEC for selenium is 6.56 µg/L based on 11 samples collected by the Discharger between March 2004 and January 2007. Selenium concentrations in the receiving water ranged from 0.25 µg/l to 0.85 µg/L, with an average of 0.44 µg/L (based on 12 samples collected between January 2002 through December 2002). The MEC exceeds the NTR water quality

objective for the protection of aquatic life. An AMEL of 3.5 µg/L and a MDEL of 9.2 µg/L have been established in the Order, pursuant to the procedures specified in the SIP (See Attachment F, Table F-8 for WQBEL calculations).

v. **Settleable Solids.** The MEC for settleable solids was less than 0.1 ml/L, based on 1,596 samples collected between January 2003 through May 2007. The previous Order required effluent limitations for settleable solids of 0.1 ml/L. The effluent has not been observed to exceed the narrative objective for settleable solids in the Basin Plan. Therefore, effluent limitations for settleable solids are no longer necessary. The removal of the effluent limitations for copper is in compliance with 40 CFR 122.44(l)(2)(i)(B)(1).

w. **Toxicity.** See Section IV.C.5. of the Fact Sheet regarding whole effluent toxicity.

**4. WQBEL Calculations**

a. Effluent limitations for aluminum, ammonia, cyanide, and selenium were calculated in accordance with section 1.4 of the SIP. The following paragraphs describe the methodology used for calculating effluent limitations.

b. **Effluent Limitation Calculations.** In calculating maximum effluent limitations, the effluent concentration allowances were set equal to the criteria/standards/objectives.

$$ECA_{acute} = CMC \qquad ECA_{chronic} = CCC$$

For the human health, agriculture, or other long-term criterion/objective, a dilution credit can be applied. The ECA is calculated as follows:

$$ECA_{HH} = HH + D(HH - B)$$

where:

$ECA_{acute}$ = effluent concentration allowance for acute (one-hour average) toxicity criterion

$ECA_{chronic}$ = effluent concentration allowance for chronic (four-day average) toxicity criterion

$ECA_{HH}$ = effluent concentration allowance for human health, agriculture, or other long-term criterion/objective

CMC = criteria maximum concentration (one-hour average)

CCC = criteria continuous concentration (four-day average, unless otherwise noted)

HH = human health, agriculture, or other long-term criterion/objective

D = dilution credit

B = maximum receiving water concentration

Acute and chronic toxicity ECAs were then converted to equivalent long-term averages (LTA) using statistical multipliers and the lowest is used. Additional statistical multipliers were then used to calculate the maximum daily effluent limitation (MDEL) and the average monthly effluent limitation (AMEL).

Human health ECAs are set equal to the AMEL and a statistical multiplier is used to calculate the MDEL.

$$AMEL = mult_{AMEL}\left[\min\left(\overbrace{M_A ECA_{acute}}^{LTA_{acute}}, M_C ECA_{chronic}\right)\right]$$

$$MDEL = mult_{MDEL}\left[\min\left(M_A ECA_{acute}, \underbrace{M_C ECA_{chronic}}_{LTA_{chronic}}\right)\right]$$

$$MDEL_{HH} = \left(\frac{mult_{MDEL}}{mult_{AMEL}}\right) AMEL_{HH}$$

where: $mult_{AMEL}$ = statistical multiplier converting minimum LTA to AMEL
$mult_{MDEL}$ = statistical multiplier converting minimum LTA to MDEL
$M_A$ = statistical multiplier converting CMC to LTA
$M_C$ = statistical multiplier converting CCC to LTA

Water quality-based effluent limitations were calculated for aluminum, ammonia, cyanide, selenium as follows in Tables F-5 through F-8, below.

**Table F-5. WQBEL Calculations for Aluminum**

| | Acute | Chronic |
|---|---|---|
| Criteria (µg/L) [(1)] | 750 | 750 |
| Dilution Credit | No Dilution | No Dilution |
| ECA | 750 | 750 |
| ECA Multiplier | 0.17 | 0.32 |
| LTA | 127.6 | 236.0 |
| AMEL Multiplier (95th%) | 2.2 | [(2)] |
| **AMEL** (µg/L) | 275.8 | [(2)] |
| MDEL Multiplier (99th%) | 5.9 | [(2)] |
| **MDEL** (µg/L) | 750 | [(2)] |

(1) USEPA Ambient Water Quality Criteria
(2) Limitations based on acute LTA (Acute LTA < Chronic LTA)

## Table F-6. WQBEL Calculations for Ammonia

| | May 1 to October 31 | | | November 1 to April 30 | | |
|---|---|---|---|---|---|---|
| | Acute | Chronic (30-day) | Chronic (4-day) | Acute | Chronic (30-day) | Chronic (4-day) |
| pH[2] | 8.5 | 8.5 | -- | 8.47 | 8.5 | -- |
| Temperature °C [3] | N/A | 24.7 | -- | N/A | 18.0 | -- |
| Criteria (mg/L) [1] | 2.27 | 0.61 | 1.52 | 2.27 | 1.17 | 2.93 |
| Dilution Credit | -- | -- | -- | -- | -- | -- |
| ECA | 2.14 | 0.30 | 1.52 | 2.27 | 1.17 | 2.93 |
| ECA Multiplier | 0.31 | 0.77 | 0.51 | 0.35 | 0.80 | 0.55 |
| LTA | 0.66 | 0.47 | 0.78 | 0.79 | 0.93 | 1.63 |
| AMEL Multiplier (99th%) | -- | 1.58 | -- | 1.5 | -- | -- |
| **AMEL** (mg/L) | **--** | **0.74** | -- | **1.11** | -- | -- |
| MDEL Multiplier (99th%) | -- | 3.25 | -- | 2.89 | -- | -- |
| **MDEL** (mg/L) | **--** | **1.52** | -- | **2.14** | -- | -- |

(1) USEPA Ambient Water Quality Criteria
(2) Acute pH = maximum effluent or receiving stream pH, Chronic pH = permitted maximum allowed pH of 8.5
(3) Temperature = Maximum 30-day average seasonal effluent temperature

## Table F-7. WQBEL Calculations for Cyanide

| | Acute | Chronic |
|---|---|---|
| Criteria (mg/L) | 22 | 5.2 |
| Dilution Credit | No Dilution | No Dilution |
| ECA [1] | 22 | 5.2 |
| ECA Multiplier [2] | 0.32 | 0.53 |
| LTA | 7.1 | 2.7 |
| AMEL Multiplier [3][4] | [6] | 1.55 |
| **AMEL (mg/L)** | [6] | **4.3** |
| MDEL Multiplier[5] | [6] | 3.11 |
| **MDEL (mg/L)** | [6] | **8.5** |

(1) ECA calculated per section 1.4.B, Step 2 of SIP. This allows for the consideration of dilution.
(2) Acute and Chronic ECA Multiplier calculated at 99th percentile per Section 1.4.B, Step 3 of SIP or section 5.4.1 and 5.5.4 of the TSD.
(3) Assumes sampling frequency n=>4.
(4) The probability basis for AMEL is 95th percentile per Section 1.4.B, Step 5 of SIP or Section 5.5.4 of the TSD.
(5) The probability basis for MDEL is 99th percentile per Section 1.4.B, Step 5 of SIP or Section 5.5.4 of the TSD.
(6) Limitations based on Chronic LTA (Chronic LTA < Acute LTA).

### Table F-8. WQBEL Calculations for Selenium

| | Acute | Chronic |
|---|---|---|
| Criteria (mg/L) [1] | 20 | 5 |
| Dilution Credit | No dilution | No dilution |
| ECA | 20 | 5 |
| ECA Multiplier | 0.19 | 0.34 |
| LTA | 4 | 2 |
| AMEL Multiplier (95th%) | [2] | 2.04 |
| **AMEL (mg/L)** | [2] | **3.5** |
| MDEL Multiplier (99th%) | [2] | 5.35 |
| **MDEL (mg/L)** | [2] | **9.2** |

[1] California Department of Fish and Game Water Quality Criteria
[2] Limitations based on acute LTA (Acute LTA > chronic LTA)

## Summary of Water Quality-based Effluent Limitations
## Discharge Point No. 001 and No. 002

### Table F-9. Summary of Water Quality-based Effluent Limitations

| Parameter | Units | Effluent Limitations | | | | |
|---|---|---|---|---|---|---|
| | | Average Monthly | Average Weekly | Maximum Daily | Instantaneous Minimum | Instantaneous Maximum |
| Ammonia (as N) 1 May – 31 October | mg/L | 0.74 | -- | 1.5 | -- | -- |
| | lbs/day[1] | 22 | -- | 46 | -- | -- |
| Ammonia (as N) 1 November – 30 April | mg/L | 1.11 | -- | 2.14 | -- | -- |
| | lbs/day[1] | 33 | -- | 64 | -- | -- |
| Aluminum (total) | µg/L | 276 | 200[3] | 750 | -- | -- |
| Cyanide | µg/L | 4.3 | -- | 8.5 | -- | -- |
| Nitrate + Nitrite (as N) | mg/L | 10 | -- | -- | -- | -- |
| | lbs/day | 300 [1] | -- | -- | -- | -- |
| Selenium (total) | µg/L | 3.5 | -- | 9.2 | -- | -- |
| | lbs/day | 0.11[1] | -- | 0.28[1] | -- | -- |
| Mercury (Total Recoverable) | lbs/year | 0.1[1] | -- | -- | -- | -- |
| Acute Toxicity[4] | % | -- | -- | -- | -- | -- |
| Chronic Toxicity[9] | -- | -- | -- | -- | -- | -- |
| Total Residual Chlorine[8] | mg/l | 0.01[5] | -- | 0.02[6] | -- | -- |
| Total Coliform Organisms | MPN | -- | 2.2 | 23[7] | -- | 240 |

[1] Based on a maximum permitted flow of 3.6 mgd.
[2] The average monthly percent removal of BOD 5-day 20°C and total suspended solids shall not be less than 85 percent.
[3] Annual average.
[4] Survival of aquatic organisms is 96-hour bioassays of undiluted waste shall be no less than:
Minimum for any one bioassay----------70%
Median for any three or more consecutive bioassays----------90%
[5] 4-day average.
[6] 1-hour average.
[7] Not to exceed 23 MPN more than once in a 30-day period.
[8] Total chlorine residual must be monitored with a method sensitive to and accurate at the permitted level of 0.01 mg/L..
[9] The effluent shall not cause or contribute to chronic toxicity in the receiving water.

## 5. Whole Effluent Toxicity (WET)

For compliance with the Basin Plan's narrative toxicity objective, this Order requires the Discharger to conduct whole effluent toxicity testing for acute and chronic toxicity, as specified in the Monitoring and Reporting Program (Attachment E, Section V.). This Order also contains effluent limitations for acute toxicity and requires the Discharger to implement best management practices to investigate the causes of, and identify corrective actions to reduce or eliminate effluent toxicity.

a. **Acute Aquatic Toxicity.** The Basin Plan contains a narrative toxicity objective that states, "*All waters shall be maintained free of toxic substances in concentrations that produce detrimental physiological responses in human, plant, animal, or aquatic life.*" (Basin Plan at III-8.00) The Basin Plan also states that, "…*effluent limits based upon acute biotoxicity tests of effluents will be prescribed where appropriate*…". USEPA Region 9 provided guidance for the development of acute toxicity effluent limitations in the absence of numeric water quality objectives for toxicity in its document titled "Guidance for NPDES Permit Issuance", dated February 1994. In section B.2. "Toxicity Requirements" (pgs. 14-15) it states that, "*In the absence of specific numeric water quality objectives for acute and chronic toxicity, the narrative criterion 'no toxics in toxic amounts' applies. Achievement of the narrative criterion, as applied herein, means that ambient waters shall not demonstrate for acute toxicity: 1) less than 90% survival, 50% of the time, based on the monthly median, or 2) less than 70% survival, 10% of the time, based on any monthly median. For chronic toxicity, ambient waters shall not demonstrate a test result of greater than 1 TUc."* Accordingly, effluent limitations for acute toxicity have been included in this Order as follows:

**Acute Toxicity.** Survival of aquatic organisms in 96-hour bioassays of undiluted waste shall be no less than:

Minimum for any one bioassays ---------- 70%
Median for any three or more consecutive bioassays --------- 90%

b. **Chronic Aquatic Toxicity.** Based on quarterly whole effluent chronic toxicity testing performed by the Discharger from 18 October 2002 through 10 July 2007, the discharge has reasonable potential to cause or contribute to an to an in-stream excursion above of the Basin Plan's narrative toxicity objective.

A narrative effluent limit does not allow the effluent limit to cause or contribute to chronic toxicity in the receiving water.

Numeric chronic WET effluent limitations have not been included in this order. The SIP contains implementation gaps regarding the appropriate form and implementation of chronic toxicity limits. This has resulted in the petitioning of a

NPDES permit in the Los Angeles Region[3] that contained numeric chronic toxicity effluent limitations. To address the petition, the State Water Board adopted WQO 2003-012 directing its staff to revise the toxicity control provisions in the SIP. The State Water Board states the following in WQO 2003-012*, "In reviewing this petition and receiving comments from numerous interested persons on the propriety of including numeric effluent limitations for chronic toxicity in NPDES permits for publicly-owned treatment works that discharge to inland waters, we have determined that this issue should be considered in a regulatory setting, in order to allow for full public discussion and deliberation. We intend to modify the SIP to specifically address the issue. We anticipate that review will occur within the next year. We therefore decline to make a determination here regarding the propriety of the final numeric effluent limitations for chronic toxicity contained in these permits."* The process to revise the SIP is currently underway. Proposed changes include clarifying the appropriate form of effluent toxicity limits in NPDES permits and general expansion and standardization of toxicity control implementation related to the NPDES permitting process. Since the toxicity control provisions in the SIP are under revision it is infeasible to develop numeric effluent limitations for chronic toxicity. Therefore, this Order includes a narrative chronic toxicity effluent limitation.

In addition, the Discharger is required to conduct chronic whole effluent toxicity testing, as specified in the Monitoring and Reporting Program (Attachment E, Section V.) and Special Provisions VI.C.2.a. of this Order requires the Discharger to investigate the causes of, and identify and implement corrective actions to reduce or eliminate effluent toxicity. If the discharge demonstrates a pattern of toxicity exceeding the numeric toxicity monitoring trigger, the Discharger is required to initiate a Toxicity Reduction Evaluation (TRE), in accordance with an approved TRE work plan. The numeric toxicity monitoring trigger is not an effluent limitation, it is the toxicity threshold at which the Discharger is required to perform accelerated chronic toxicity monitoring, as well as, the threshold to initiate a TRE if a pattern of effluent toxicity has been demonstrated.

## D. Final Effluent Limitations

### 1. Mass-based Effluent Limitations.

Title 40 CFR 122.45(f)(1) requires effluent limitations be expressed in terms of mass, with some exceptions, and 40 CFR 122.45(f)(2) allows pollutants that are limited in terms of mass to additionally be limited in terms of other units of measurement. This Order includes effluent limitations expressed in terms of mass and concentration. In addition, pursuant to the exceptions to mass limitations provided in 40 CFR 122.45(f)(1), some effluent limitations are not expressed in terms of mass, such as

[3] In the Matter of the Review of Own Motion of Waste Discharge Requirements Order Nos. R4-2002-0121 [NPDES No. CA0054011] and R4-2002-0123 [NPDES NO. CA0055119] and Time Schedule Order Nos. R4-2002-0122 and R4-2002-0124 for Los Coyotes and Long Beach Wastewater Reclamation Plants Issued by the California Regional Water Quality Control Board, Los Angeles Region SWRCB/OCC FILES A-1496 AND 1496(a)

pH and temperature, and when the applicable standards are expressed in terms of concentration (e.g. CTR criteria and MCLs) and mass limitations are not necessary to protect the beneficial uses of the receiving water.

Mass-based effluent limitations were calculated based upon the permitted average dry weather flow allowed in Section IV.A.1.i of the Limitations and Discharge Requirements.

**2. Averaging Periods for Effluent Limitations.**

Title 40 CFR 122.45 (d) requires average weekly and average monthly discharge limitations for publicly owned treatment works (POTWs) unless impracticable. However, for toxic pollutants and pollutant parameters in water quality permitting, the US EPA recommends the use of a maximum daily effluent limitation in lieu of average weekly effluent limitations for two reasons. "*First, the basis for the 7-day average for POTWs derives from the secondary treatment requirements. This basis is not related to the need for assuring achievement of water quality standards. Second, a 7-day average, which could comprise up to seven or more daily samples, could average out peak toxic concentrations and therefore the discharge's potential for causing acute toxic effects would be missed.*" (TSD, pg. 96) This Order utilizes maximum daily effluent limitations in lieu of average weekly effluent limitations for ammonia, chlorine residual[4], copper, cyanide, and selenium as recommended by the TSD for the achievement of water quality standards and for the protection of the beneficial uses of the receiving stream. Furthermore, for BOD, TSS, pH, and coliform weekly average effluent limitations have been replaced or supplemented with effluent limitations utilizing shorter averaging periods. The rationale for using shorter averaging periods for these constituents is discussed in Attachment F, Section IV.C.3., above.

**3. Satisfaction of Anti-Backsliding Requirements.**

Some effluent limitations in this Order are less stringent that those in the previous Order. As discussed below this relaxation of effluent limitations is consistent with the anti-backsliding requirements of the Clean Water Act sections 402(o) or 303(d)(4), or where applicable, 40CFR 122.44(l).

**a. Effluent Limitations**

i. **Copper.** Order No. R5-2003-0003, Amendment No. 1 required final effluent limitations for copper. However, recent studies show, and the Regional Water Board concurs, that for copper the lowest effluent hardness may be used for determining the applicable water quality criteria that is both reasonable and fully protective of the beneficial uses of the receiving water (See previous section IV.C.2.b. Hardness for detailed discussion). Copper concentrations in

[4] This Order applies the USEPA National Ambient Water Quality Criteria for chlorine directly as effluent limitations (1 hour average, acute, and 4-day average, chronic). See Section IV.C.3., above, for rational regarding the chlorine residual effluent limitations.

both the effluent and the receiving water monitoring results were detected below the hardness dependent criteria for the protection of freshwater aquatic life, which is based upon this new information (For detailed discussion see previous section IV.C.3.h.). This Order removes the effluent limitations for copper because the discharge does not demonstrate a reasonable potential to cause or contribute to an in-stream excursion of the CTR criteria for copper.

ii. **Dichloromethane.** Order No R5-2003-0003, Amendment No. 1 contained effluent limitations for dichloromethane. Analytical monitoring results obtained since issuance of the previous permit, demonstrated that the MEC and the maximum observed upstream receiving water dichloromethane concentration did not exceed the CTR criteria for dichloromethane.

Based on the new information and the procedures established in Section 1.3 of the SIP for determining reasonable potential, the discharge no longer demonstrates reasonable potential to exceed water quality criteria for dichloromethane. Therefore, this Order removes the previously required effluent limitations for dichloromethane.

iii. **Dioxin/Furans.** Order No R5-2003-0003, Amendment No. 1 contained effluent limitations for dioxin/furans. Analytical monitoring results obtained since issuance of the previous permit, demonstrated that the MEC and the maximum observed upstream receiving water dioxin/furans concentration did not exceed the CTR criteria for dioxin/furans.

Based on the new information and the procedures established in Section 1.3 of the SIP for determining reasonable potential, the discharge no longer demonstrates reasonable potential to exceed water quality criteria for dioxin/furans. Therefore, this Order removes the previously required effluent limitations for dioxin/furans.

iv. **Electrical Conductivity (EC).** Order No. R5-2003-0003, Amendment No. 1 required that the Discharger meet the final average monthly effluent limitation of 900 µmhos/cm for electrical conductivity. The circumstances on which the previous permit was based have materially and substantially changed since the time the permit was issued and the Discharger was never able to comply with the existing limitation. There is also new information now regarding the salinity issues for the Facility that was not available at the time the previous permit was developed. The Discharger has conducted several studies to identify and minimize salinity sources and has found that it will be necessary to change water supplies to meet the existing limitation, which could take many years to accomplish.

v. **Lead.** Order No R5-2003-0003, Amendment No. 1 contained effluent limitations for lead. Analytical monitoring results obtained since issuance of the previous permit, demonstrated that the MEC and the maximum observed

upstream receiving water lead concentration did not exceed the CTR criteria for lead.

Based on the new information and the procedures established in Section 1.3 of the SIP for determining reasonable potential, the discharge no longer demonstrates reasonable potential to exceed water quality criteria for lead. Therefore, this Order removes the previously required effluent limitations for lead.

vi. **Settleable Solids.** Order No R5-2003-0003, Amendment No. 1 contained effluent limitations for settleable solids of 0.1 ml/L as a daily maximum. Analytical monitoring results obtained since issuance of the previous permit showed that settleable solids were never detected above 0.1 ml/L. Based on this new information, this Order does not contain the previously required effluent limitations for settleable solids because the discharge does not demonstrate a reasonable potential to cause or contribute to an in-stream excursion.

vii. **Turbidity.** Order No. R5-2003-0003, Amendment No. 1 contained effluent limitations for turbidity. The prior limitations were solely an operational check to ensure the treatment system was functioning properly. The prior effluent limitations were not intended to regulate turbidity in the receiving water. Rather, turbidity is an operational parameter to determine proper system functioning and not a water quality based effluent limitation.

The revised Order contains performance based operational turbidity specifications to be met prior to disinfection in lieu of effluent limitations. The revised Order does not include effluent limitations for turbidity. However, the performance-based specification in this Order is an equivalent limit that is not less stringent, and therefore does not constitute backsliding.

The proposed revised operational specifications for turbidity are the same as the effluent limitations in the previous permit, with the inclusion of a more stringent requirement for an instantaneous maximum limit at any time. (See Special Provision VI.C.4 Ultraviolet Disinfection (UV) System Operating Specifications for turbidity specifications.) The proposed revised permit places the point of compliance at the final effluent after disinfection. These revisions are consistent with state regulations implementing recycled water requirements. The revisions in the electrical conductivity (EC) and turbidity limitations are consistent with the antidegradation provisions of 40 CFR 131.12. and State Water Resources Control Board Resolution 68-16 because this Order imposes equivalent or more stringent requirements than the prior permit and therefore does not allow degradation. Any impact on existing water quality will be insignificant.

### 4. Satisfaction of Antidegradation Policy

This Order provides for an increase in the volume and mass of pollutants discharged and is consistent with the antidegradation provisions of 40 CFR 131.12 and State Water Resources Control Board Resolution 68-16 as updated by State Water Board Administrative Procedure Update (APU) No. 90-004. The following is a summary of the Antidegradation Analysis Report (AAR) titled, *Antidegradation Analysis for the UC Davis Wastewater Treatment Plant Expansion,* 14 December 2007 submitted by the Discharger to evaluate the proposed increase in discharge from 2.7 mgd to 3.6 mgd:

a. **Water Quality Parameters and Beneficial Uses which will be Affected by this Order and the Extent of the Impact.** This Order does not impact beneficial uses of the receiving water or downstream receiving waters. All beneficial uses will be maintained and protected. The analysis performed by the Discharger demonstrated that the increase in WWTP discharge into Putah Creek would not result in lowered water quality at the significance threshold of 10 (ten) percent for detected constituent concentrations. Although the concentrations are still within water quality objectives downstream of the WWTP discharge, electrical conductivity (EC) and selenium will have some incremental increase and use a portion of Putah Creek's assimilative capacity. Both constituents are primarily due to the relatively high levels found in the campus domestic water supplies.

   Projected mass loading concentrations for selenium will take 13.5% of existing creek assimilative capacity, which exceeds the 10% threshold. The Discharger expects this issue to be resolved once the University completes projects (see Fact Sheet Section IV.C.3.s.v.) to reduce EC levels, which will concurrently address selenium.

b. **Scientific Rationale for Determining Potential Lowering of Water Quality.** The rationale used in the AAR is based on Code of Federal Regulations, Section 131.12. (40CFR 131.12), USEPA memorandum *regarding Tier 2 Antidegradation Reviews and Significance Thresholds* (USEPA 2005) USEPA Region 9 *Guidance on Implementing the Antidegradation Provisions of 40 CFR 131.12* (USEPA 1987), State Water Resources Control Board (SWRCB) Resolution No. 68-16, a SWRCB 1987 policy memorandum to the Regional Water Quality Control Boards (RWQCB), and an Administrative Procedures Update (APU 90-004) issued by SWRCB to the RWQCBs. The scientific rationale the Discharger used to determine if the Order allows a lowering of water quality is to determine the reduction of assimilative capacity. Assimilative capacity was calculated on a mass-balanced, concentration based, and for bioaccumulative constituents, calculated on a mass loading basis. This approach is consistent with recent USEPA guidance and addresses a key objective of the AAR to "[c]ompare receiving water quality to the water quality objectives established to protect designated beneficial uses" (APU90-004). USEPA recommended ten (10) percent as a measure of significance for identifying those substantial lowerings of water quality that should receive a full tier 2 antidegradation review. APU 90-004 requires the consideration of "feasible alternative control measures" as part of the

procedures for a complete antidegradation analysis. The Discharger analyzed each pollutant detected in the effluent and receiving water to determine if the increased discharge of 3.6 mgd authorized by this Order potentially allows significant increase of the amount of pollutants present in the downstream receiving water. Pollutants that significantly increased concentration or mass downstream required an alternatives analysis to determine whether implementation of alternatives to the proposed action would be in the best socioeconomic interest of the people of the region, and be to the maximum benefit of the people of the State. Details of the scientific rationale are discussed in detail in the AAR.

c. **Description of Alternative Control Measures.** The Discharger considered several alternatives that would reduce the lowering of water quality resulting from the additional 0.9 mgd of discharge capacity proposed with the plant expansion. These alternatives included no project-no build, higher degree of treatment using reverse osmosis, seasonal recycled water irrigation, divert additional wastewater to the City of Davis Wastewater Treatment Plant, and divert additional effluent to evaporation ponds. Each alternative was assessed for feasibility in implementation and effectiveness in reducing the lowering of water quality. These alternatives were not selected because they would not meet basic project objectives and/or were determined to be infeasible for technological, environmental, and economic reasons. Detailed description of the alternatives are discussed in the Antidegradation Analysis Report (AAR) titled, *Antidegradation Analysis for the UC Davis Wastewater Treatment Plant Expansion,* 14 December 2007.

d. **Description and Justification of Socioeconomic Evaluation.** The increase in the discharge allows wastewater utility service necessary to accommodate housing and new research facilities, and is considered to be a social and economical benefit to the people of the region and State. The discharge is a Title 22, or equivalent, tertiary-level treat wastewater, which is a high level of treatment of sewage waste that is considered best practicable treatment or control (BPTC) for most constituents in the wastewater and will result in attaining water quality standards applicable to the discharge.

Based on the Antidegradation Analysis provided by the Discharger, the Regional Water Board finds that the permitted discharge is consistent with the antidegradation provisions of 40 CFR 131.12 and State Water Resources Control Board Resolution 68-16 and provides a social and economical benefit to the people of the State. This Order provides for an increase in the volume and mass of pollutants discharged into Putah Creek, by allowing an increased regulated flow of 3.6 mgd. The increase will not have significant impacts on aquatic life, which is the beneficial use most likely affected by the pollutants discharged (BOD, suspended solids, chlorine residual, temperature, and metals). The increase will not cause a violation of water quality objectives. The increase in the discharge allows wastewater utility service necessary to accommodate housing and economic expansion in the area, and is considered to be a social and economical benefit to the people of the State.

Compliance with these requirements will result in the use of best practicable treatment or control of the discharge.

## Summary of Final Effluent Limitations
## Discharge Points No. 001 and No. 002

### Table F-10. Summary of Final Effluent Limitations

| Parameter | Units | Effluent Limitations | | | | | Basis |
|---|---|---|---|---|---|---|---|
| | | Average Monthly | Average Weekly | Maximum Daily | Instantaneous Minimum | Instantaneous Maximum | |
| Biochecmical Oxygen Demand ($BOD_5$) (5-day @ 20°C | mg/L | 10[1] | 15[1] | 20[1] | -- | -- | PO |
| | lbs/day | 300[2] | 450[2] | 600[2] | -- | -- | |
| Total Suspended Solids | mg/L | 10 | 15 | 20 | -- | -- | TB |
| | lbs/day | 300[2] | 450[2] | 600[2] | -- | -- | |
| pH | Standard Units | -- | -- | -- | 6.5 | 8.5 | |
| Flow | mgd | 3.6 | -- | -- | -- | -- | |
| Ammonia (as N) 1 May – 31 October | mg/L | 0.74 | -- | 1.5 | -- | -- | |
| | lbs/day[2] | 18 | -- | 36 | -- | -- | |
| Ammonia (as N) 1 November – 30 April | mg/L | 1.11 | -- | 2.14 | -- | -- | |
| | lbs/day[2] | 33 | -- | 64 | -- | -- | |
| Aluminum (total) | µg/L | 276 | 200[3] | 750 | -- | -- | |
| Cyanide | µg/L | 4.3 | -- | 8.5 | -- | -- | |
| Nitrate + Nitrite (as N) | mg/L | 10 | -- | -- | -- | -- | |
| | lbs/day | 300[2] | -- | -- | -- | -- | |
| Selenium (total) | µg/L | 3.5 | -- | 9.2 | -- | -- | |
| | lbs/day | 0.11[2] | -- | 0.28[2] | -- | -- | |
| Acute Toxicity[4] | % survival | -- | -- | -- | -- | -- | |
| Chronic Toxicity [9] | -- | -- | -- | -- | -- | -- | |
| Total Residual Chlorine[8] | mg/L | 0.01[5] | -- | 0.02[6] | -- | -- | |
| Total Coliform Organisms | MPN | -- | 2.2 | 23[7] | -- | 240 | |

PO – Previous Order No. R5-2003-0003, Amendment No. 1
TB – Technology Based
[1] To be ascertained as a 24-hour composite.
[2] Based on a average dry weather flow of 3.6 mgd.
[3] Annual average.
[4] Survival of aquatic organisms in 96-hour bioassays of undiluted waste shall be no less than 70%, minimum for any one bioassay; and 90%, median for any three consecutive bioassays.
[5] 4-day average
[6] 1-hour average
[7] Not to exceed 23 MPN more than once in a 30-day period.
[8] Total chlorine residual must be monitored with a method sensitive to and accurate at the permitted level of 0.01 mg/L.
[9] The effluent shall not cause or contribute to chronic toxicity in the receiving water.

## E. Interim Effluent Limitations

1. **Electrical Conductivity (EC).** The interim limitations for EC in this Order are based on the current treatment plant performance. In developing the interim limitation for EC, the highest running monthly average was taken from 1,598 data points.

   Table F-11 summarizes the calculations of the interim effluent limitation for EC.

**Table F-11. Interim Effluent Limitation Calculation Summary**

| Parameter | Units | MEC | Mean | Maximum 30-Day Running Average | # of Samples | Interim Limitation |
|---|---|---|---|---|---|---|
| Electrical Conductivity (EC) | µmhos/cm | 1,679 | 1,091 | 1,400 | 1,598 | 1,400 |

2. **Mercury, Total.** The interim limitations for mercury in this Order are based on the current treatment plant performance. In developing the interim limitation for mercury, the highest observed effluent mercury data and average dry weather flow were used and converted to a mass limit. The total annual mass loading for total mercury shall not exceed 0.10 pounds.

The Regional Water Board finds that the Discharger can undertake source control and treatment plant measures to maintain compliance with the interim limitations included in this Order. Interim limitations are established when compliance with effluent limitations cannot be achieved by the existing discharge. Discharge of constituents in concentrations in excess of the final effluent limitations, but in compliance with the interim effluent limitations, can significantly degrade water quality and adversely affect the beneficial uses of the receiving stream on a long-term basis. The interim limitations, however, establish an enforceable ceiling concentration until compliance with the effluent limitation can be achieved.

## F. Land Discharge Specifications – Not Applicable

## G. Reclamation Specifications

Treated wastewater discharged for reclamation is regulated under separate waste discharge requirements and must meet the requirements of California Code of Regulations, Title 22.

The Discharger does not propose to reclaim treated effluent.

# V. RATIONALE FOR RECEIVING WATER LIMITATIONS

Basin Plan water quality objectives to protect the beneficial uses of surface water and groundwater include numeric objectives and narrative objectives, including objectives for chemical constituents, toxicity, and tastes and odors. The toxicity objective requires that surface water and groundwater be maintained free of toxic substances in concentrations

that produce detrimental physiological responses in humans, plants, animals, or aquatic life. The chemical constituent objective requires that surface water and groundwater shall not contain chemical constituents in concentrations that adversely affect any beneficial use or that exceed the maximum contaminant levels (MCLs) in Title 22, CCR. The tastes and odors objective states that surface water and groundwater shall not contain taste- or odor-producing substances in concentrations that cause nuisance or adversely affect beneficial uses. The Basin Plan requires the application of the most stringent objective necessary to ensure that surface water and groundwater do not contain chemical constituents, toxic substances, radionuclides, or taste and odor producing substances in concentrations that adversely affect domestic drinking water supply, agricultural supply, or any other beneficial use.

### A. Surface Water

1. CWA section 303(a-c), requires states to adopt water quality standards, including criteria where they are necessary to protect beneficial uses. The Regional Water Board adopted water quality criteria as water quality objectives in the Basin Plan. The Basin Plan states that "*[t]he numerical and narrative water quality objectives define the least stringent standards that the Regional Board will apply to regional waters in order to protect the beneficial uses*." The Basin Plan includes numeric and narrative water quality objectives for various beneficial uses and water bodies. This Order contains Receiving Surface Water Limitations based on the Basin Plan numerical and narrative water quality objectives for bacteria, biostimulatory substances, chemical constituents, color, dissolved oxygen, floating material, oil and grease, pH, pesticides, radioactivity, salinity, sediment, settleable material, suspended material, tastes and odors, temperature, toxicity, and electrical conductivity.

   Numeric Basin Plan objectives for bacteria, dissolved oxygen, pH, and temperature, are applicable to this discharge and have been incorporated as Receiving Surface Water Limitations. Rational for these numeric receiving surface water limitations are as follows:

   a. **Ammonia***.* The Basin Plan states that, "[w]*aters shall not contain un-ionized ammonia in amounts which adversely affect beneficial uses. In no case shall the discharge of wastes cause concentrations of un-ionized ammonia ($NH_3$) to exceed 0.025 mg/l (as N) in receiving waters.*"

   b. **Bacteria.** The Basin Plan includes a water quality objective that "*[I]n water designated for contact recreation (REC-1), the fecal coliform concentration based on a minimum of not less than five samples for any 30-day period shall not exceed a geometric mean of 200/100 ml, nor shall more than ten percent of the total number of samples taken during any 30-day period exceed 400/100 ml*." Numeric Receiving Water Limitations for bacteria are included in this Order and are based on the Basin Plan objective.

   c. **Biostimulatory Substances**. The Basin Plan includes a water quality objective that "*[W]ater shall not contain biostimulatory substances which promote aquatic*

*growths in concentrations that cause nuisance or adversely affect beneficial uses."* Receiving Water Limitations for biostimulatory substances are included in this Order and are based on the Basin Plan objective.

d. **Color**. The Basin Plan includes a water quality objective that "*[W]ater shall be free of discoloration that causes nuisance or adversely affects beneficial uses."* Receiving Water Limitations for color are included in this Order and are based on the Basin Plan objective.

e. **Chemical Constituents**. The Basin Plan includes a water quality objective that *"[W]aters shall not contain chemical constituents in concentrations that adversely affect beneficial uses."* Receiving Water Limitations for chemical constituents are included in this Order and are based on the Basin Plan objective.

f. **Dissolved Oxygen.** The Basin Plan includes a water quality objective that "*[W]ithin the legal boundaries of the Delta, the dissolved oxygen concentrations shall not be reduced below: 7.0 mg/L in the Sacramento River (below the I Street Bridge) and in all Delta waters west of the Antioch Bridge; 6.0 mg/L in the San Joaquin River (between Turner Cut and Stockton, 1 September through 30 November); and 5.0 mg/L in all other Delta waters except those bodies of water which are constructed for special purposes and from which fish have been excluded or where the fishery is not important as a beneficial use*." Numeric Receiving Water Limitations for dissolved oxygen are included in this Order and are based on the Basin Plan objective.

g. **Floating Material**. The Basin Plan includes a water quality objective that *"[W]ater shall not contain floating material in amounts that cause nuisance or adversely affect beneficial uses."* Receiving Water Limitations for floating material are included in this Order and are based on the Basin Plan objective.

h. **Oil and Grease**. The Basin Plan includes a water quality objective that *"[W]aters shall not contain oils, greases, waxes, or other materials in concentrations that cause nuisance, result in a visible film or coating on the surface of the water or on objects in the water, or otherwise adversely affect beneficial uses."* Receiving Water Limitations for oil and grease are included in this Order and are based on the Basin Plan objective.

i. **pH.** The Basin Plan includes water quality objective that *"[T]he pH shall not be depressed below 6.5 nor raised above 8.5. Changes in normal ambient pH levels shall not exceed 0.5 in fresh waters with designated COLD or WARM beneficial uses*". This Order includes receiving water limitations for both pH range and pH change.

The Basin Plan allows an appropriate averaging period for pH change in the receiving stream. Since there is no technical information available that indicates that aquatic organisms are adversely affected by shifts in pH within the 6.5 to 8.5 range, an averaging period is considered appropriate and a monthly averaging

period for determining compliance with the 0.5 receiving water pH limitation is included in this Order.

j. **Pesticides**. The Basin Plan includes a water quality objective for pesticides beginning on page III-6.00. Receiving Water Limitations for pesticides are included in this Order and are based on the Basin Plan objective.

k. **Radioactivity**. The Basin Plan includes a water quality objective that *"[R]adionuclides shall not be present in concentrations that are harmful to human, plant, animal or aquatic life nor that result in the accumulation of radionuclides in the food web to an extent that presents a hazard to human, plant, animal or aquatic life."* The Basin Plan states further that *"[A]t a minimum, waters designated for use as domestic or municipal supply (MUN) shall not contain concentrations of radionuclides in excess of the maximum contaminant levels (MCLs) specified in Table 4 (MCL Radioactivity) of Section 64443 of Title 22 of the California Code of Regulations…"* Receiving Water Limitations for radioactivity are included in this Order and are based on the Basin Plan objective.

l. **Sediment.** The Basin Plan includes a water quality objective that *"[T]he suspended sediment load and suspended sediment discharge rate of surface waters shall not be altered in such a manner as to cause nuisance or adversely affect beneficial uses"* Receiving Water Limitations for suspended sediments are included in this Order and are based on the Basin Plan objective.

m. **Settleable Material.** The Basin Plan includes a water quality objective that *"[W]aters shall not contain substances in concentrations that result in the deposition of material that causes nuisance or adversely affects beneficial uses."* Receiving Water Limitations for settleable material are included in this Order and are based on the Basin Plan objective.

n. **Suspended Material.** The Basin Plan includes a water quality objective that *"[W]aters shall not contain suspended material in concentrations that cause nuisance or adversely affect beneficial uses."* Receiving Water Limitations for suspended material are included in this Order and are based on the Basin Plan objective.

o. **Taste and Odors**. The Basin Plan includes a water quality objective that *"[W]ater shall not contain taste- or odor-producing substances in concentrations that impart undesirable tastes or odors to domestic or municipal water supplies or to fish flesh or other edible products of aquatic origin, or that cause nuisance, or otherwise adversely affect beneficial uses."* Receiving Water Limitations for taste- or odor-producing substances are included in this Order and are based on the Basin Plan objective.

p. **Temperature.** Putah Creek has the beneficial uses of both COLD and WARM. The Basin Plan includes the objective that "[a]*t no time or place shall the temperature of COLD or WARM intrastate waters be increased more than 5ºF*

*above natural receiving water temperature*." This Order includes a receiving water limitation based on this objective.

q. **Toxicity**. The Basin Plan includes a water quality objective that *"[A]ll waters shall be maintained free of toxic substances in concentrations that produce detrimental physiological responses in human, plant, animal, or aquatic life."* Receiving Water Limitations for toxicity are included in this Order and are based on the Basin Plan objective.

r. **Turbidity.** The Basin Plan includes a water quality objective that "*[I]ncreases in turbidity attributable to controllable water quality factors shall not exceed the following limits:*

- *Where natural turbidity is between 0 and 5 Nephelometric Turbidity Units (NTUs), increases shall not exceed 1 NTU.*
- *Where natural turbidity is between 5 and 50 NTUs, increases shall not exceed 20 percent.*
- *Where natural turbidity is between 50 and 100 NTUs, increases shall not exceed 10 NTUs.*
- *Where natural turbidity is greater than 100 NTUs, increases shall not exceed 10 percent*."

## B. Groundwater

1. The beneficial uses of the underlying ground water are municipal and domestic supply, industrial service supply, industrial process supply, and agricultural supply.

2. Basin Plan water quality objectives include narrative objectives for chemical constituents, tastes and odors, and toxicity of groundwater. The toxicity objective requires that groundwater be maintained free of toxic substances in concentrations that produce detrimental physiological responses in humans, plants, animals, or aquatic life. The chemical constituent objective states groundwater shall not contain chemical constituents in concentrations that adversely affect any beneficial use. The tastes and odors objective prohibits taste- or odor-producing substances in concentrations that cause nuisance or adversely affect beneficial uses. The Basin Plan also establishes numerical water quality objectives for chemical constituents and radioactivity in ground waters designated as municipal supply. These include, at a minimum, compliance with MCLs in Title 22 of the CCR. The bacteria objective prohibits coliform organisms at or above 2.2 MPN/100 ml. The Basin Plan requires the application of the most stringent objective necessary to ensure that waters do not contain chemical constituents, toxic substances, radionuclides, taste- or odor-producing substances, or bacteria in concentrations that adversely affect municipal or domestic supply, agricultural supply, industrial supply or some other beneficial use.

3. Groundwater limitations are required to protect the beneficial uses of the underlying groundwater.

## VI. RATIONALE FOR MONITORING AND REPORTING REQUIREMENTS

Section 122.48 requires that all NPDES permits specify requirements for recording and reporting monitoring results. Water Code sections 13267 and 13383 authorizes the Regional Water Board to require technical and monitoring reports. The Monitoring and Reporting Program (MRP), Attachment E of this Order, establishes monitoring and reporting requirements to implement federal and state requirements. The following provides the rationale for the monitoring and reporting requirements contained in the MRP for this facility.

### A. Influent Monitoring

Influent monitoring is required to collect data on the characteristics of the wastewater and to assess compliance with effluent limitations (*e.g.*, BOD and TSS percent reduction requirements). The Monitoring and Reporting Requirements (Attachment E) includes influent monitoring requirements in Attachment E, Section III.A.

### B. Effluent Monitoring

1. Pursuant to the requirements of 40 CFR §122.44(i)(2) effluent monitoring is required for all constituents with effluent limitations. Effluent monitoring is necessary to assess compliance with effluent limitations, assess the effectiveness of the treatment process, and to assess the impacts of the discharge on the receiving stream and groundwater. Effluent monitoring requirements for flow, chlorine residual, pH, temperature, electrical conductivity, total coliform organisms, ammonia (as N), BOD, total suspended solids, total dissolved solids, hardness, aluminum, cyanide, nitrate + nitrite (as N), iron, and phosphorus have been carried over from Monitoring and Reporting Program No. R5-2003-0003, Amendment No. 1 to determine compliance with effluent limitations for these parameters.

   Monitoring data collected over the previous permit term for dichloromethane, dioxin/furans, lead, and settleable solids did not demonstrate reasonable potential to exceed water quality objectives. Specific monitoring requirements for these parameters have not been carried over, however these parameters must be monitored as part of the quarterly priority pollutant monitoring required during the third year of the permit term.

   Monitoring data submitted by the Discharger during the previous permit term indicates that the discharge has reasonable potential to exceed water quality criteria for selenium. Monthly monitoring has been established to determine compliance with the applicable effluent limitation.

## C. Whole Effluent Toxicity Testing Requirements

1. **Acute Toxicity.** Quarterly 96-hour bioassay testing was required in the previous permit in order to demonstrate compliance with the effluent limitation for acute toxicity. This monitoring requirement will be carried over to the new Order.

2. **Chronic Toxicity.** Quarterly chronic whole effluent toxicity testing was required in the previous permit in order to demonstrate compliance with the Basin Plan's narrative toxicity objective. This monitoring requirement will be carried over to the new Order to provide the Regional Water Board with toxicity data necessary to determine if future effluent limitations would be necessary.

## D. Receiving Water Monitoring

### 1. Surface Water

a. Receiving water monitoring is necessary to assess compliance with receiving water limitations and to assess the impacts of the discharge on the receiving stream. The receiving water monitoring requirements from Monitoring and Reporting Program Order No. R5-0003-0003, Amendment No. 1 has been carried over to the Order.

b. Quarterly monitoring for priority pollutants upstream of Discharge Point No. 1 at RSW-001U is required during the third year of the permit term to collect the necessary data to determine reasonable potential as required in section 1.2 of the SIP. The pH and hardness (as $CaCO_3$) of the upstream receiving water shall also be monitored concurrently with the priority pollutants to ensure the water quality criteria/objectives are correctly adjusted for the receiving water when determining reasonable potential as specified in section 1.3 of the SIP.

### 2. Groundwater

a. Section 13267 of the California Water Code states, in part, *"(a) A Regional Water Board, in establishing…waste discharge requirements… may investigate the quality of any waters of the state within its region*" and *"(b) (1) In conducting an investigation…, the Regional Water Board may require that any person who… discharges… waste…that could affect the quality of waters within its region shall furnish, under penalty of perjury, technical or monitoring program reports which the Regional Water Board requires. The burden, including costs, of these reports shall bear a reasonable relationship to the need for the report and the benefits to be obtained from the reports*." In requiring those reports, the Regional Water Board shall provide the person with a written explanation with regard to the need for the reports, and shall identify the evidence that supports requiring that person to provide the reports. The Monitoring and Reporting Program (Attachment E) is issued pursuant to California Water Code Section 13267. The groundwater monitoring and reporting program required by this Order and the Monitoring and Reporting Program are necessary to assure compliance with these waste

discharge requirements. The Discharger is responsible for the discharges of waste at the facility subject to this Order.

b. Monitoring of the groundwater must be conducted to determine if the discharge has caused an increase in constituent concentrations, when compared to background. The monitoring must, at a minimum, require a complete assessment of groundwater impacts including the vertical and lateral extent of degradation, an assessment of all wastewater-related constituents which may have migrated to groundwater, an analysis of whether additional or different methods of treatment or control of the discharge are necessary to provide best practicable treatment or control to comply with Resolution No. 68-16. Economic analysis is only one of many factors considered in determining best practicable treatment or control. If monitoring indicates that the discharge has incrementally increased constituent concentrations in groundwater above background, this permit may be reopened and modified. Until groundwater monitoring is sufficient, this Order contains Groundwater Limitations that allow groundwater quality to be degraded for certain constituents when compared to background groundwater quality, but not to exceed water quality objectives. If groundwater quality has been degraded by the discharge, the incremental change in pollutant concentration (when compared with background) may not be increased. If groundwater quality has been or may be degraded by the discharge, this Order may be reopened and specific numeric limitations established consistent with Resolution 68-16 and the Basin Plan.

c. This Order requires the Discharger to continue groundwater monitoring and includes a regular schedule of groundwater monitoring in the attached Monitoring and Reporting Program. The groundwater monitoring reports are necessary to evaluate impacts to waters of the State to assure protection of beneficial uses and compliance with Regional Board plans and policies, including Resolution 68-16. Evidence in the record includes effluent monitoring data that indicates the presence of constituents that may degrade groundwater and surface water.

## E. Ultraviolet (UV) Disinfection System Monitoring

UV System specifications and monitoring and reporting are required when the UV system becomes operational to ensure that adequate UV dosage is applied to the wastewater to inactivate pathogens (e.g., viruses in the wastewater). UV Disinfection system monitoring is imposed pursuant to requirements established by the California Department of Public Health (DPH) and the National Water Research Institute (NWRI) and American Water Works Association Research Foundation (NWRI/AWWRF's "*Ultraviolet Disinfection Guidelines for Drinking Water and Water Reuse*").

## F. Other Monitoring Requirements

1. **Biosolids Monitoring**
   Biosolids monitoring is required to ensure compliance with the biosolids disposal requirements (Special Provisions VI.C.6.a.). Biosolids disposal requirements are

imposed pursuant to 40 CFR Part 503 to protect public health and prevent groundwater degradation.

2. **Water Supply Monitoring**
Water supply monitoring is required to evaluate the source of EC, selenium, and TDS in the wastewater.

## VII. RATIONALE FOR PROVISIONS

### A. Standard Provisions

Standard Provisions, which apply to all NPDES permits in accordance with section 122.41, and additional conditions applicable to specified categories of permits in accordance with section 122.42, are provided in Attachment D. The discharger must comply with all standard provisions and with those additional conditions that are applicable under section 122.42.

Section 122.41(a)(1) and (b) through (n) establish conditions that apply to all State-issued NPDES permits. These conditions must be incorporated into the permits either expressly or by reference. If incorporated by reference, a specific citation to the regulations must be included in the Order. Section 123.25(a)(12) allows the state to omit or modify conditions to impose more stringent requirements. In accordance with section 123.25, this Order omits federal conditions that address enforcement authority specified in sections 122.41(j)(5) and (k)(2) because the enforcement authority under the Water Code is more stringent. In lieu of these conditions, this Order incorporates by reference Water Code section 13387(e).

### B. Special Provisions

#### 1. Reopener Provisions

a. **Mercury (Special Provisions IV.C.1.c).** This provision allows the Regional Water Board to reopen this Order in the event a mercury TMDL program is adopted. In addition, this Order may be reopened if the Regional Water Board determines that a mercury offset program is feasible for dischargers subject to NPDES permits.

b. **Whole Effluent Toxicity.** This Order requires the Discharger to investigate the causes of, and identify corrective actions to reduce or eliminate effluent toxicity through a Toxicity Reduction Evaluation (TRE). This Order may be reopened to include a numeric chronic toxicity limitation, a new acute toxicity limitation, and/or a limitation for a specific toxicant identified in the TRE. Additionally, if a numeric chronic toxicity water quality objective is adopted by the State Water Board, this Order may be reopened to include a numeric chronic toxicity limitation based on that objective.

c. **Water Effects Ratio (WER) and Metal Translators.** A default WER of 1.0 has been used in this Order for calculating CTR criteria for applicable priority

pollutant inorganic constituents. In addition, default dissolved-to-total metal translators have been used to convert water quality objectives from dissolved to total recoverable when developing effluent limitations for inorganic constituents contained within this Order. If the Discharger performs studies to determine site-specific WERs and/or site-specific dissolved-to-total metal translators, this Order may be reopened to modify the effluent limitations for the applicable inorganic constituents.

**2. Special Studies and Additional Monitoring Requirements**

a. **Chronic Whole Effluent Toxicity Requirements.** The Basin Plan contains a narrative toxicity objective that states, "*All waters shall be maintained free of toxic substances in concentrations that produce detrimental physiological responses in human, plant, animal, or aquatic life.*" (Basin Plan at III-8.00.) Based on quarterly whole effluent chronic toxicity testing performed by the Discharger from 18 October 2002 through 10 July 2007, the discharge has reasonable potential to cause or contribute to an to an in-stream excursion above of the Basin Plan's narrative toxicity objective.

This provision requires the Discharger to develop a Toxicity Reduction Evaluation (TRE) Work Plan in accordance with EPA guidance. In addition, the provision provides a numeric toxicity monitoring trigger and requirements for accelerated monitoring, as well as, requirements for TRE initiation if a pattern of toxicity has been demonstrated.

**Monitoring Trigger.** A numeric toxicity monitoring trigger of > 1 TUc (where TUc = 100/NOEC) is applied in the provision, because this Order does not allow any dilution for the chronic condition. Therefore, a TRE is triggered when the effluent exhibits a pattern of toxicity at 100% effluent.

**Accelerated Monitoring.** The provision requires accelerated WET testing when a regular WET test result exceeds the monitoring trigger. The purpose of accelerated monitoring is to determine, in an expedient manner, whether there is a pattern of toxicity before requiring the implementation of a TRE. Due to possible seasonality of the toxicity, the accelerated monitoring should be performed in a timely manner, preferably taking no more than 2 to 3 months to complete.

The provision requires accelerated monitoring consisting of four chronic toxicity tests every two weeks using the species that exhibited toxicity. Guidance regarding accelerated monitoring and TRE initiation is provided in the *Technical Support Document for Water Quality-based Toxics Control, EPA/505/2-90-001, March 1991* (TSD). The TSD at page 118 states, "EPA recommends if toxicity is repeatedly or periodically present at levels above effluent limits more than 20 percent of the time, a TRE should be required." Therefore, four accelerated monitoring tests are required in this provision. If no toxicity is demonstrated in the four accelerated tests, then it demonstrates that toxicity is not present at

levels above the monitoring trigger more than 20 percent of the time (only 1 of 5 tests are toxic, including the initial test). However, notwithstanding the accelerated monitoring results, if there is adequate evidence of a pattern of effluent toxicity (i.e. toxicity present exceeding the monitoring trigger more than 20 percent of the time), the Executive Officer may require that the Discharger initiate a TRE.

See the WET Accelerated Monitoring Flow Chart (Figure F-1), below, for further clarification of the accelerated monitoring requirements and for the decision points for determining the need for TRE initiation.

**TRE Guidance.** The Discharger is required to prepare a TRE Work Plan in accordance with USEPA guidance. Numerous guidance documents are available, as identified below:

- *Toxicity Reduction Evaluation Guidance for Municipal Wastewater Treatment Plants,* (EPA/833B-99/002), August 1999.
- Generalized Methodology for Conducting Industrial TREs*, (EPA/600/2-88/070), April 1989.*
- *Methods for Aquatic Toxicity Identification Evaluations: Phase I Toxicity Characterization Procedures,* Second Edition, EPA 600/6-91/005F, February 1991.
- *Toxicity Identification Evaluation: Characterization of Chronically Toxic Effluents, Phase I*, EPA 600/6-91/005F, May 1992.
- *Methods for Aquatic Toxicity Identification Evaluations: Phase II Toxicity Identification Procedures for Samples Exhibiting acute and Chronic Toxicity,* Second Edition, EPA 600/R-92/080, September 1993.
- *Methods for Aquatic Toxicity Identification Evaluations: Phase III Toxicity Confirmation Procedures for Samples Exhibiting Acute and Chronic Toxicity*, Second Edition, EPA 600/R-92/081, September 1993.
- *Methods for Measuring the Acute Toxicity of Effluents and Receiving Waters to Freshwater and Marine Organisms*, Fifth Edition, EPA-821-R-02-012, October 2002.
- *Short-term Methods for Estimating the Chronic Toxicity of Effluents and Receiving Waters to Freshwater Organisms*, Fourth Edition, EPA-821-R-02-013, October 2002.
- *Technical Support Document for Water Quality-based Toxics Control, EPA/505/2-90-001, March 1991*

**Figure F-1**
**WET Accelerated Monitoring Flow Chart**

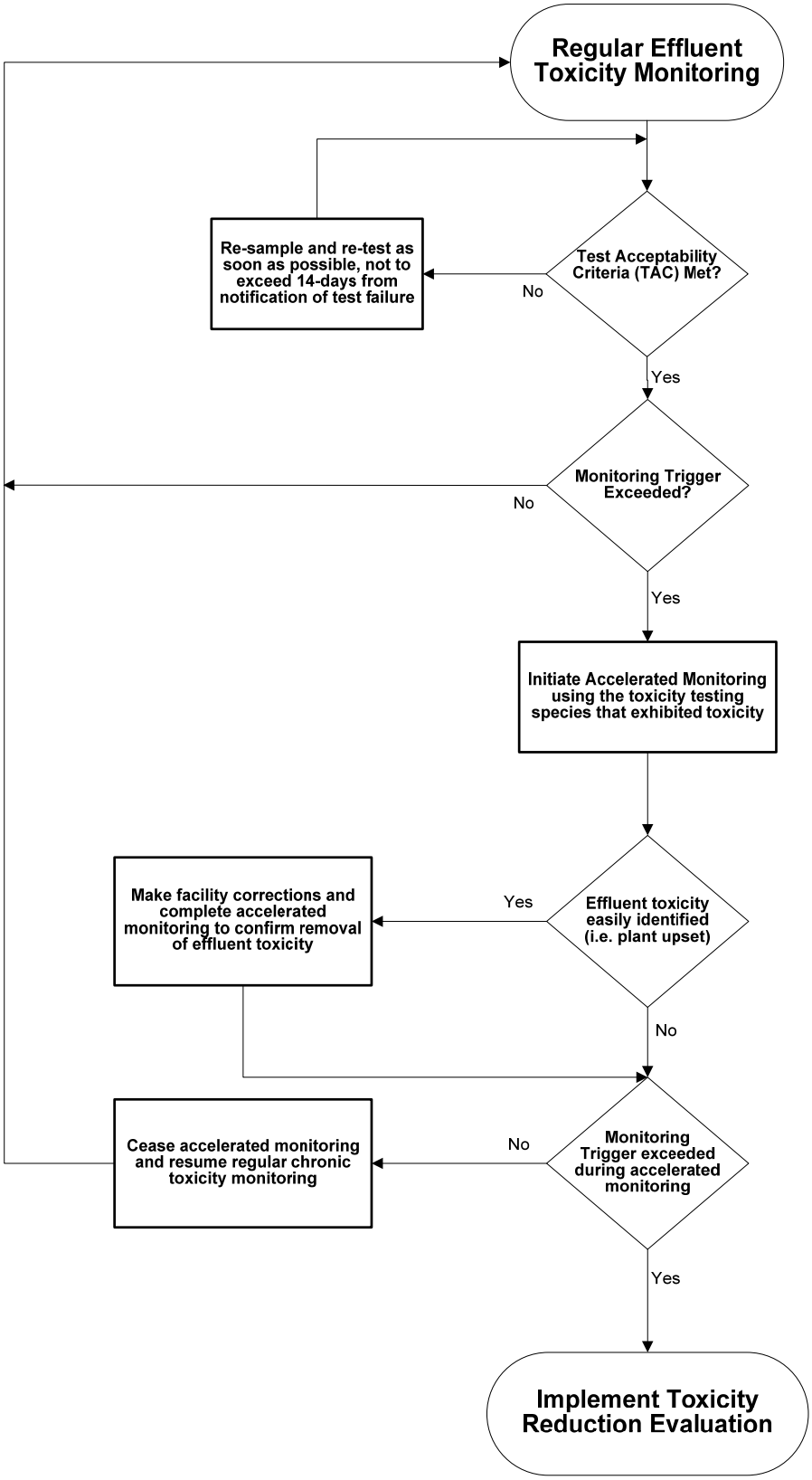

b. **Water Reclamation Report.** The Discharger shall complete a water reclamation report to evaluate beneficial reuse for uses including (but not limited to) landscape irrigation and agricultural use on the University of California Davis campus.

c. **Salinity/EC Site-Specific Study.** The Discharger shall complete and submit a report on the results of a site-specific investigation of appropriate EC levels to protect agricultural beneficial use in areas irrigated with water from Putah Creek diverted downstream from the discharge.

d. **Groundwater Monitoring (Special Provisions VI.C.2.d.).** To date, the Discharger has installed 6 groundwater monitoring wells (three located at the abandoned Primate Center wastewater facility sludge ponds and three located onsite around the wastewater treatment plant's solids stabilization basin and sludge drying beds). The Primate Center sludge ponds have been decommissioned ever since the wastewater treatment plant moved to its new location in 2000. The previous Order required a geological study and the Discharger is still conducting groundwater monitoring at the Primate Center sludge ponds because of the requirements of the previous Order. The sludge ponds are no longer in use and a thorough cleanup was conducted 8 years ago. Groundwater data was submitted to the Regional Water Board and a letter of approval was sent to the Discharger.

This Order requires the Discharger to continue groundwater monitoring at the three groundwater monitoring locations onsite at the wastewater treatment plant and includes a schedule of groundwater monitoring. This Order also removes groundwater monitoring at the Primate Center wastewater facility sludge ponds. If the monitoring shows that any constituent concentrations are increased above background water quality, the Discharger shall submit a technical report **within 90 days** following identification of groundwater impacts describing the groundwater technical report results and critiquing each evaluated component of the Facility with respect to BPTC and minimizing the discharge's impact on groundwater quality. In no case shall the discharge be allowed to exceed the Groundwater Limitations. Accordingly, this provision allows the Regional Water Board to reopen this Order to include groundwater limitations for specific constituents based on the Basin Plan's groundwater quality objectives.

**3. Best Management Practices and Pollution Minimization**

a. **Pollution Minimization Plan.** The pollution minimization plan required for mercury shall, at minimum, include the following:

i. An estimate of all of the sources of a pollutant contributing, or potentially contributing, to the loadings of a pollutant in the treatment plant influent.

ii. An analysis of the methods that could be used to prevent the discharge of the pollutants into the Facility, including application of local limits to industrial or

commercial dischargers regarding pollution minimization techniques, public education and outreach, or other innovative and alternative approaches to reduce discharges of the pollutant to the Facility. The analysis also shall identify sources, or potential sources, not within the ability or authority of the Discharger to control, such as pollutants in the potable water supply, airborne pollutants, pharmaceuticals, or pesticides, and estimate the magnitude of those sources, to the extent feasible.

iii. An estimate of load reductions that may be attained through the methods identified in subparagraph ii.

iv. A plan for monitoring the results of the pollution minimization program.

v. A description of the tasks, cost, and time required to investigate and implement various elements in the pollution minimization plan.

vi. A statement of the Discharger's pollution minimization goals and strategies, including priorities for short-term and long-term action, and a description of the Discharger's intended pollution minimization activities for the immediate future.

vii. A description of the Discharger's existing pollution minimization programs.

viii. An analysis, to the extent feasible, of any adverse environmental impacts, including cross-media impacts or substitute chemicals that may result from the implementation of the pollution minimization program.

ix. An analysis, to the extent feasible, of the costs and benefits that may be incurred to implement the pollution minimization program.

## 4. Construction, Operation, and Maintenance Specifications

### a. Ultraviolet (UV) Disinfection System Operating Specifications

UV System specifications and monitoring and reporting are required to ensure that adequate UV dosage is applied to the wastewater to inactivate pathogens (e.g., viruses in the wastewater). UV dosage is dependent on several factors such as UV transmittance, UV power setting, wastewater turbidity, and wastewater flow through the UV system. Monitoring and reporting of these parameters is necessary to determine compliance with minimum dosage requirements established by the California Department of Public Health (DPH) and the National Water Research Institute (NWRI) and American Water Works Association Research Foundation NWRI/AWWRF's "*Ultraviolet Disinfection Guidelines for Drinking Water and Water Reuse*" first published in December 2000 and revised as a Second Edition dated May 2003. In addition, a Memorandum dated 1 November 2004 issued by DPH to Regional Board executive offices recommended that provisions be included in permits to water recycling treatment plants employing UV disinfection requiring Dischargers to establish fixed cleaning frequency if quartz sleeves as well as include provisions

that specify minimum delivered UV dose that must be maintained (as recommended by the NWRI/AWWRF UV Disinfection Guidelines).

Turbidity is included as an operational specification as an indicator of the effectiveness of the treatment process and to assure compliance effluent coliform limitations. Failure of the treatment system such that virus removal is impaired would normally result in increased particles in the effluent, which result in higher effluent turbidity and could impact UV dosage. Turbidity has a major advantage for monitoring filter performance, allowing immediate detection of filter failure and rapid corrective action. The operational specification requires that turbidity prior to disinfection shall not exceed 2 NTU as a daily average; 5 NTU, more than 5% of the time within a 24-hour period, and an instantaneous maximum of 10 NTU.

Minimum UV dosage and turbidity specifications are included as operating criteria in Special Provisions Section VI.C.4 and Monitoring Requirements, Attachment E Section IX.C to ensure that adequate disinfection of wastewater is achieved.

**5. Special Provisions for Municipal Facilities (POTWs Only)**

a. **Biosolids.** The use and disposal of biosolids is regulated under federal and state laws and regulations, including permitting requirements and technical standards included in 40 CFR Part 503. The Discharger is required to comply with the standards and time schedules contained in 40 CFR Part 503.

Title 27, CCR, Division 2, Subdivision 1, section 20005 establishes approved methods for the disposal of collected screenings, residual sludge, biosolids, and other solids removed from liquid wastes. This Order includes requirements to ensure the Discharger disposes of solids in compliance with state and federal regulations.

b. **Collection System.** On 2 May 2006, the State Water Board adopted State Water Board Order No. 2006-0003, a Statewide General WDR for Sanitary Sewer Systems. The Discharger shall be subject to the requirements of Order No. 2006-0003 and any future revisions thereto. Order No. 2006-0003 requires that all public agencies that currently own or operate sewer systems apply for coverage under the General WDR.

Regardless of the coverage obtained under order No. 2006-0003, the Discharger's collection system is part of the treatment system that is subject to the Order. As such, pursuant to federal regulations, the Discharger must properly operate and maintain its collection system [40 CFR section 122.41 (e)], report any non-compliance [40 CFR section 122.41(l)(6) and (7)], and mitigate any discharge from the collection system in violation of this Order [40 CFR section 122.41(d)].

### 6. Other Special Provisions

a. Pursuant to DPH reclamation criteria, Title 22 CCR, Division 4, Chapter 3, (Title 22), wastewater discharged to Putah Creek must be oxidized, coagulated, filtered, and adequately disinfected; or equivalent. Special provision VI.C.6.a requires that effluent discharges to Putah Creek meet the requirements of Title 22, or equivalent, for the protection of the REC-1 and REC-2 beneficial uses.

b. Sections 122.41(l)(3) and 122.61 of the Code of Federal Regulations establish requirements for the transfer of an NPDES permit. Special Provision VI.C.6.b of this Order requires the Discharger to comply with federal regulations for the transfer of NPDES permits in the event of a change of ownership.

### 7. Compliance Schedules – Not Applicable

## VIII. PUBLIC PARTICIPATION

The California Regional Water Quality Control Board, Central Valley Region (Regional Water Board) is considering the issuance of waste discharge requirements (WDRs) that will serve as a National Pollutant Discharge Elimination System (NPDES) permit for University of California Davis Main Wastewater Treatment Plant. As a step in the WDR adoption process, the Regional Water Board staff has developed tentative WDRs. The Regional Water Board encourages public participation in the WDR adoption process.

### A. Notification of Interested Parties

The Regional Water Board has notified the Discharger and interested agencies and persons of its intent to prescribe waste discharge requirements for the discharge and has provided them with an opportunity to submit their written comments and recommendations. Notification was provided through the following direct mailing to agencies and known interested parties, posting of NOPH at the Discharger's offices and the local post office and publication in the local paper.

### B. Written Comments

The staff determinations are tentative. Interested persons are invited to submit written comments concerning these tentative WDRs. Comments must be submitted either in person or by mail to the Executive Office at the Regional Water Board at the address above on the cover page of this Order.

To be fully responded to by staff and considered by the Regional Water Board, written comments should be received at the Regional Water Board offices by 5:00 p.m. on 27 October 2008.

## C. Public Hearing

The Regional Water Board will hold a public hearing on the tentative WDRs during its regular Board meeting on the following date and time and at the following location:

Date: 4/5 December 2008
Time: 8:30 am
Location: Regional Water Quality Control Board, Central Valley Region
11020 Sun Center Dr., Suite #200
Rancho Cordova, CA 95670

Interested persons are invited to attend. At the public hearing, the Regional Water Board will hear testimony, if any, pertinent to the discharge, WDRs, and permit. Oral testimony will be heard; however, for accuracy of the record, important testimony should be in writing.

Please be aware that dates and venues may change. Our Web address is http://www.waterboards.ca.gov/rwqcb5/ where you can access the current agenda for changes in dates and locations.

## D. Waste Discharge Requirements Petitions

Any aggrieved person may petition the State Water Resources Control Board to review the decision of the Regional Water Board regarding the final WDRs. The petition must be submitted within 30 days of the Regional Water Board's action to the following address:

State Water Resources Control Board
Office of Chief Counsel
P.O. Box 100, 1001 I Street
Sacramento, CA 95812-0100

## E. Information and Copying

The Report of Waste Discharge (RWD), related documents, tentative effluent limitations and special provisions, comments received, and other information are on file and may be inspected at the address above at any time between 8:30 a.m. and 4:45 p.m., Monday through Friday. Copying of documents may be arranged through the Regional Water Board by calling 916-464-4828.

## F. Register of Interested Persons

Any person interested in being placed on the mailing list for information regarding the WDRs and NPDES permit should contact the Regional Water Board, reference this facility, and provide a name, address, and phone number.

## G. Additional Information

Requests for additional information or questions regarding this order should be directed to Elizabeth Lee at 916-464-4787 or Joshua Palmer at 916-464-4852.

# Attachment G – Reasonable Potential Analysis

| Constituent | Units | MEC | B | C | CMC | CCC | Water & Org. | Org. Only | Basin Plan | MCL | Reasonable Potential |
|---|---|---|---|---|---|---|---|---|---|---|---|
| Aluminum | µg/L | 251.80 | 526 | 200 | 750(2) | 87(1) | - | - | - | - | Yes |
| Ammonia (as N) | mg/L | 2.57 | 0.10 | 0.62 | 2.14(2) | 0.62(3) | 30 | - | - | - | Yes |
| Chloride | mg/L | 195 | 35 | 106 | 860(2) | 230(1) | - | - | - | 106 | Yes |
| Cyanide | µg/L | 6.10 | 6.70 | 5.2 | 22.0 | 5.2 | 700 | 220,000 | - | 150 | Yes |
| Iron | µg/L | 145.0 | 988.0 | 300 | - | 1,000(6) | - | - | - | 300 | No |
| Manganese | µg/L | 3 | 83.70 | 50 | - | - | - | 100 | - | 50 | No |
| Nitrate (as N) | mg/L | 10.20 | 22.60 | 10 | - | - | - | - | - | 10 | Yes |
| Selenium | µg/L | 6.56 | 0.85 | 5 | 20(4) | 5(5) | - | - | - | 50 | Yes |
| Specific Conductance (EC) | µmhos/cm | 1,679 | 637 | Varies | - | - | - | - | - | Varies | Yes |
| Total Dissolved Solids (TDS) | mg/L | 848 | 384 | 450 | - | - | - | - | - | 500 | Yes |

General Note: All inorganic concentrations are given as total recoverable.
MEC = Maximum Effluent Concentration
B = Maximum Receiving Water Concentration or lowest detection level, if non-detect
C = Criterion used for Reasonable Potential Analysis
CMC = Criterion Maximum Concentration (CTR or NTR)
CCC = Criterion Continuous Concentration (CTR or NTR)
Water & Org. = Human Health Criterion for Consumption of Water & Organisms (CTR or NTR)
Org. Only = Human Health Criterion for Consumption of Organisms Only (CTR or NTR)
Basin Plan = Numeric Site-Specific Basin Plan Water Quality Objective
MCL = Drinking Water Standards Maximum Contaminant Level

Footnotes:
(1) USEPA National Recommended Ambient Water Quality Criteria, Freshwater Aquatic Life Protection, 4-day average.
(2) USEPA National Recommended Ambient Water Quality Criteria, Freshwater Aquatic Life Protection, 1-hour average.
(3) USEPA National Recommended Ambient Water Quality Criteria, Freshwater Aquatic Life Protection, 30-day average.
(4) California Toxics Rule, Inland Surface Waters, Protection of Freshwater Aquatic Life, 1-hour average.
(5) California Toxics Rule, Inland Surface Waters, Protection of Freshwater Aquatic Life, 30-day average.
(6) USEPA National Recommended Ambient Water Quality Criteria, Freshwater Aquatic Life Protection, instantaneous maximum.

TENTATIVE ORDER

# Attachment H - Constituents to be monitored

| | | | Controlling Water Quality Criterion for Surface Waters | | | |
|---|---|---|---|---|---|---|
| CTR # | Constituent | CAS Number | Basis | Criterion Concentration (ug/L or noted) (1) | Criterion Quantitation Limit (ug/L or noted) | Suggested Test Methods |
| **VOLATILE ORGANICS** | | | | | | |
| 28 | 1,1-Dichloroethane | 75343 | Primary MCL | 5 | 0.5 | EPA 8260B |
| 30 | 1,1-Dichloroethene | 75354 | National Toxics Rule | 0.057 | 0.5 | EPA 8260B |
| 41 | 1,1,1-Trichloroethane | 71556 | Primary MCL | 200 | 0.5 | EPA 8260B |
| 42 | 1,1,2-Trichloroethane | 79005 | National Toxics Rule | 0.6 | 0.5 | EPA 8260B |
| 37 | 1,1,2,2-Tetrachloroethane | 79345 | National Toxics Rule | 0.17 | 0.5 | EPA 8260B |
| 75 | 1,2-Dichlorobenzene | 95501 | Taste & Odor | 10 | 0.5 | EPA 8260B |
| 29 | 1,2-Dichloroethane | 107062 | National Toxics Rule | 0.38 | 0.5 | EPA 8260B |
| | cis-1,2-Dichloroethene | 156592 | Primary MCL | 6 | 0.5 | EPA 8260B |
| 31 | 1,2-Dichloropropane | 78875 | Calif. Toxics Rule | 0.52 | 0.5 | EPA 8260B |
| 101 | 1,2,4-Trichlorobenzene | 120821 | Public Health Goal | 5 | 0.5 | EPA 8260B |
| 76 | 1,3-Dichlorobenzene | 541731 | Taste & Odor | 10 | 0.5 | EPA 8260B |
| 32 | 1,3-Dichloropropene | 542756 | Primary MCL | 0.5 | 0.5 | EPA 8260B |
| 77 | 1,4-Dichlorobenzene | 106467 | Primary MCL | 5 | 0.5 | EPA 8260B |
| 17 | Acrolein | 107028 | Aquatic Toxicity | 21 | 2 | EPA 8260B |
| 18 | Acrylonitrile | 107131 | National Toxics Rule | 0.059 | 2 | EPA 8260B |
| 19 | Benzene | 71432 | Primary MCL | 1 | 0.5 | EPA 8260B |
| 20 | Bromoform | 75252 | Calif. Toxics Rule | 4.3 | 0.5 | EPA 8260B |
| 34 | Bromomethane | 74839 | Calif. Toxics Rule | 48 | 1 | EPA 8260B |
| 21 | Carbon tetrachloride | 56235 | National Toxics Rule | 0.25 | 0.5 | EPA 8260B |
| 22 | Chlorobenzene (mono chlorobenzene) | 108907 | Taste & Odor | 50 | 0.5 | EPA 8260B |
| 24 | Chloroethane | 75003 | Taste & Odor | 16 | 0.5 | EPA 8260B |
| 25 | 2- Chloroethyl vinyl ether | 110758 | Aquatic Toxicity | 122 (3) | 1 | EPA 8260B |
| 26 | Chloroform | 67663 | OEHHA Cancer Risk | 1.1 | 0.5 | EPA 8260B |
| 35 | Chloromethane | 74873 | USEPA Health Advisory | 3 | 0.5 | EPA 8260B |
| 23 | Dibromochloromethane | 124481 | Calif. Toxics Rule | 0.41 | 0.5 | EPA 8260B |
| 27 | Dichlorobromomethane | 75274 | Calif. Toxics Rule | 0.56 | 0.5 | EPA 8260B |
| 36 | Dichloromethane | 75092 | Calif. Toxics Rule | 4.7 | 0.5 | EPA 8260B |
| 33 | Ethylbenzene | 100414 | Taste & Odor | 29 | 0.5 | EPA 8260B |
| 88 | Hexachlorobenzene | 118741 | Calif. Toxics Rule | 0.00075 | 1 | EPA 8260B |
| 89 | Hexachlorobutadiene | 87683 | National Toxics Rule | 0.44 | 1 | EPA 8260B |
| 91 | Hexachloroethane | 67721 | National Toxics Rule | 1.9 | 1 | EPA 8260B |
| 94 | Naphthalene | 91203 | USEPA IRIS | 14 | 10 | EPA 8260B |
| 38 | Tetrachloroethene | 127184 | National Toxics Rule | 0.8 | 0.5 | EPA 8260B |
| 39 | Toluene | 108883 | Taste & Odor | 42 | 0.5 | EPA 8260B |
| 40 | trans-1,2-Dichloroethylene | 156605 | Primary MCL | 10 | 0.5 | EPA 8260B |
| 43 | Trichloroethene | 79016 | National Toxics Rule | 2.7 | 0.5 | EPA 8260B |
| 44 | Vinyl chloride | 75014 | Primary MCL | 0.5 | 0.5 | EPA 8260B |
| | Methyl-tert-butyl ether (MTBE) | 1634044 | Secondary MCL | 5 | 0.5 | EPA 8260B |
| | Trichlorofluoromethane | 75694 | Primary MCL | 150 | 5 | EPA 8260B |
| | 1,1,2-Trichloro-1,2,2-Trifluoroethane | 76131 | Primary MCL | 1200 | 10 | EPA 8260B |
| | Styrene | 100425 | Taste & Odor | 11 | 0.5 | EPA 8260B |
| | Xylenes | 1330207 | Taste & Odor | 17 | 0.5 | EPA 8260B |

T E N T A T I V E O R D E R

| | | | | | | |
|---|---|---|---|---|---|---|
| **SEMI-VOLATILE ORGANICS** | | | | | | |
| 60 | 1,2-Benzanthracene | 56553 | Calif. Toxics Rule | 0.0044 | 5 | EPA 8270C |
| 85 | 1,2-Diphenylhydrazine | 122667 | National Toxics Rule | 0.04 | 1 | EPA 8270C |
| 45 | 2-Chlorophenol | 95578 | Taste and Odor | 0.1 | 2 | EPA 8270C |
| 46 | 2,4-Dichlorophenol | 120832 | Taste and Odor | 0.3 | 1 | EPA 8270C |
| 47 | 2,4-Dimethylphenol | 105679 | Calif. Toxics Rule | 540 | 2 | EPA 8270C |
| 49 | 2,4-Dinitrophenol | 51285 | National Toxics Rule | 70 | 5 | EPA 8270C |
| 82 | 2,4-Dinitrotoluene | 121142 | National Toxics Rule | 0.11 | 5 | EPA 8270C |
| 55 | 2,4,6-Trichlorophenol | 88062 | Taste and Odor | 2 | 10 | EPA 8270C |
| 83 | 2,6-Dinitrotoluene | 606202 | USEPA IRIS | 0.05 | 5 | EPA 8270C |
| 50 | 2-Nitrophenol | 25154557 | Aquatic Toxicity | 150 (5) | 10 | EPA 8270C |
| 71 | 2-Chloronaphthalene | 91587 | Aquatic Toxicity | 1600 (6) | 10 | EPA 8270C |
| 78 | 3,3'-Dichlorobenzidine | 91941 | National Toxics Rule | 0.04 | 5 | EPA 8270C |
| 62 | 3,4-Benzofluoranthene | 205992 | Calif. Toxics Rule | 0.0044 | 10 | EPA 8270C |
| 52 | 4-Chloro-3-methylphenol | 59507 | Aquatic Toxicity | 30 | 5 | EPA 8270C |
| 48 | 4,6-Dinitro-2-methylphenol | 534521 | National Toxics Rule | 13.4 | 10 | EPA 8270C |
| 51 | 4-Nitrophenol | 100027 | USEPA Health Advisory | 60 | 5 | EPA 8270C |
| 69 | 4-Bromophenyl phenyl ether | 101553 | Aquatic Toxicity | 122 | 10 | EPA 8270C |
| 72 | 4-Chlorophenyl phenyl ether | 7005723 | Aquatic Toxicity | 122 (3) | 5 | EPA 8270C |
| 56 | Acenaphthene | 83329 | Taste and Odor | 20 | 1 | EPA 8270C |
| 57 | Acenaphthylene | 208968 | No Criteria Available | | 10 | EPA 8270C |
| 58 | Anthracene | 120127 | Calif. Toxics Rule | 9,600 | 10 | EPA 8270C |
| 59 | Benzidine | 92875 | National Toxics Rule | 0.00012 | 5 | EPA 8270C |
| 61 | Benzo(a)pyrene (3,4-Benzopyrene) | 50328 | Calif. Toxics Rule | 0.0044 | 0.1 | EPA 8270C |
| 63 | Benzo(g,h,i)perylene | 191242 | No Criteria Available | | 5 | EPA 8270C |
| 64 | Benzo(k)fluoranthene | 207089 | Calif. Toxics Rule | 0.0044 | 2 | EPA 8270C |
| 65 | Bis(2-chloroethoxy) methane | 111911 | No Criteria Available | | 5 | EPA 8270C |
| 66 | Bis(2-chloroethyl) ether | 111444 | National Toxics Rule | 0.031 | 1 | EPA 8270C |
| 67 | Bis(2-chloroisopropyl) ether | 39638329 | Aquatic Toxicity | 122 (3) | 10 | EPA 8270C |
| 68 | Bis(2-ethylhexyl) phthalate | 117817 | National Toxics Rule | 1.8 | 3 | EPA 8270C |
| 70 | Butyl benzyl phthalate | 85687 | Aquatic Toxicity | 3 (7) | 10 | EPA 8270C |
| 73 | Chrysene | 218019 | Calif. Toxics Rule | 0.0044 | 5 | EPA 8270C |
| 81 | Di-n-butylphthalate | 84742 | Aquatic Toxicity | 3 (7) | 10 | EPA 8270C |
| 84 | Di-n-octylphthalate | 117840 | Aquatic Toxicity | 3 (7) | 10 | EPA 8270C |
| 74 | Dibenzo(a,h)-anthracene | 53703 | Calif. Toxics Rule | 0.0044 | 0.1 | EPA 8270C |
| 79 | Diethyl phthalate | 84662 | Aquatic Toxicity | 3 (7) | 2 | EPA 8270C |
| 80 | Dimethyl phthalate | 131113 | Aquatic Toxicity | 3 (7) | 2 | EPA 8270C |
| 86 | Fluoranthene | 206440 | Calif. Toxics Rule | 300 | 10 | EPA 8270C |
| 87 | Fluorene | 86737 | Calif. Toxics Rule | 1300 | 10 | EPA 8270C |
| 90 | Hexachlorocyclopentadiene | 77474 | Taste and Odor | 1 | 1 | EPA 8270C |
| 92 | Indeno(1,2,3-c,d)pyrene | 193395 | Calif. Toxics Rule | 0.0044 | 0.05 | EPA 8270C |
| 93 | Isophorone | 78591 | National Toxics Rule | 8.4 | 1 | EPA 8270C |
| 98 | N-Nitrosodiphenylamine | 86306 | National Toxics Rule | 5 | 1 | EPA 8270C |
| 96 | N-Nitrosodimethylamine | 62759 | National Toxics Rule | 0.00069 | 5 | EPA 8270C |
| 97 | N-Nitrosodi-n-propylamine | 621647 | Calif. Toxics Rule | 0.005 | 5 | EPA 8270C |
| 95 | Nitrobenzene | 98953 | National Toxics Rule | 17 | 10 | EPA 8270C |
| 53 | Pentachlorophenol | 87865 | Calif. Toxics Rule | 0.28 | 0.2 | EPA 8270C |
| 99 | Phenanthrene | 85018 | No Criteria Available | | 5 | EPA 8270C |
| 54 | Phenol | 108952 | Taste and Odor | 5 | 1 | EPA 8270C |
| 100 | Pyrene | 129000 | Calif. Toxics Rule | 960 | 10 | EPA 8270C |

| | | | | | | |
|---|---|---|---|---|---|---|
| **INORGANICS** | | | | | | |
| | Aluminum | 7429905 | Ambient Water Quality | 87 | 50 | EPA 6020/200.8 |
| 1 | Antimony | 7440360 | Primary MCL | 6 | 5 | EPA 6020/200.8 |
| 2 | Arsenic | 7440382 | Ambient Water Quality | 0.018 | 0.01 | EPA 1632 |
| 15 | Asbestos | 1332214 | National Toxics Rule/ Primary MCL | 7 MFL | 0.2 MFL >10um | EPA/600/R-93/116(PCM) |
| | Barium | 7440393 | Basin Plan Objective | 100 | 100 | EPA 6020/200.8 |
| 3 | Beryllium | 7440417 | Primary MCL | 4 | 1 | EPA 6020/200.8 |
| 4 | Cadmium | 7440439 | Public Health Goal | 0.07 | 0.25 | EPA 1638/200.8 |
| 5a | Chromium (total) | 7440473 | Primary MCL | 50 | 2 | EPA 6020/200.8 |
| 5b | Chromium (VI) | 18540299 | Public Health Goal | 0.2 | 0.5 | EPA 7199/ 1636 |
| 6 | Copper | 7440508 | National Toxics Rule | 4.1 (2) | 0.5 | EPA 6020/200.8 |
| 14 | Cyanide | 57125 | National Toxics Rule | 5.2 | 5 | EPA 9012A |
| | Fluoride | 7782414 | Public Health Goal | 1000 | 0.1 | EPA 300 |
| | Iron | 7439896 | Secondary MCL | 300 | 100 | EPA 6020/200.8 |
| 7 | Lead | 7439921 | Calif. Toxics Rule | 0.92 (2) | 0.5 | EPA 1638 |
| 8 | Mercury | 7439976 | TMDL Development | | 0.0002 (11) | EPA 1669/1631 |
| | Manganese | 7439965 | Secondary MCL/ Basin Plan Objective | 50 | 20 | EPA 6020/200.8 |
| 9 | Nickel | 7440020 | Calif. Toxics Rule | 24 (2) | 5 | EPA 6020/200.8 |
| 10 | Selenium | 7782492 | Calif. Toxics Rule | 5 (8) | 5 | EPA 6020/200.8 |
| 11 | Silver | 7440224 | Calif. Toxics Rule | 0.71 (2) | 1 | EPA 6020/200.8 |
| 12 | Thallium | 7440280 | National Toxics Rule | 1.7 | 1 | EPA 6020/200.8 |
| | Tributyltin | 688733 | Ambient Water Quality | 0.063 | 0.002 | EV-024/025 |
| 13 | Zinc | 7440666 | Calif. Toxics Rule/ Basin Plan Objective | 54/ 16 (2) | 10 | EPA 6020/200.8 |
| | | | | | | |
| **PESTICIDES - PCBs** | | | | | | |
| 110 | 4,4'-DDD | 72548 | Calif. Toxics Rule | 0.00083 | 0.02 | EPA 8081A |
| 109 | 4,4'-DDE | 72559 | Calif. Toxics Rule | 0.00059 | 0.01 | EPA 8081A |
| 108 | 4,4'-DDT | 50293 | Calif. Toxics Rule | 0.00059 | 0.01 | EPA 8081A |
| 112 | alpha-Endosulfan | 959988 | National Toxics Rule | 0.056 (9) | 0.02 | EPA 8081A |
| 103 | alpha-Hexachlorocyclohexane (BHC) | 319846 | Calif. Toxics Rule | 0.0039 | 0.01 | EPA 8081A |
| | Alachlor | 15972608 | Primary MCL | 2 | 1 | EPA 8081A |
| 102 | Aldrin | 309002 | Calif. Toxics Rule | 0.00013 | 0.005 | EPA 8081A |
| 113 | beta-Endosulfan | 33213659 | Calif. Toxics Rule | 0.056 (9) | 0.01 | EPA 8081A |
| 104 | beta-Hexachlorocyclohexane | 319857 | Calif. Toxics Rule | 0.014 | 0.005 | EPA 8081A |
| 107 | Chlordane | 57749 | Calif. Toxics Rule | 0.00057 | 0.1 | EPA 8081A |
| 106 | delta-Hexachlorocyclohexane | 319868 | No Criteria Available | | 0.005 | EPA 8081A |
| 111 | Dieldrin | 60571 | Calif. Toxics Rule | 0.00014 | 0.01 | EPA 8081A |
| 114 | Endosulfan sulfate | 1031078 | Ambient Water Quality | 0.056 | 0.05 | EPA 8081A |
| 115 | Endrin | 72208 | Calif. Toxics Rule | 0.036 | 0.01 | EPA 8081A |
| 116 | Endrin Aldehyde | 7421934 | Calif. Toxics Rule | 0.76 | 0.01 | EPA 8081A |
| 117 | Heptachlor | 76448 | Calif. Toxics Rule | 0.00021 | 0.01 | EPA 8081A |
| 118 | Heptachlor Epoxide | 1024573 | Calif. Toxics Rule | 0.0001 | 0.01 | EPA 8081A |
| 105 | Lindane (gamma-Hexachlorocyclohexane) | 58899 | Calif. Toxics Rule | 0.019 | 0.019 | EPA 8081A |
| 119 | PCB-1016 | 12674112 | Calif. Toxics Rule | 0.00017 (10) | 0.5 | EPA 8082 |
| 120 | PCB-1221 | 11104282 | Calif. Toxics Rule | 0.00017 (10) | 0.5 | EPA 8082 |

TENTATIVE ORDER

| | | | | | | |
|---|---|---|---|---|---|---|
| 121 | PCB-1232 | 11141165 | Calif. Toxics Rule | 0.00017 (10) | 0.5 | EPA 8082 |
| 122 | PCB-1242 | 53469219 | Calif. Toxics Rule | 0.00017 (10) | 0.5 | EPA 8082 |
| 123 | PCB-1248 | 12672296 | Calif. Toxics Rule | 0.00017 (10) | 0.5 | EPA 8082 |
| 124 | PCB-1254 | 11097691 | Calif. Toxics Rule | 0.00017 (10) | 0.5 | EPA 8082 |
| 125 | PCB-1260 | 11096825 | Calif. Toxics Rule | 0.00017 (10) | 0.5 | EPA 8082 |
| 126 | Toxaphene | 8001352 | Calif. Toxics Rule | 0.0002 | 0.5 | EPA 8081A |
| | Atrazine | 1912249 | Public Health Goal | 0.15 | 1 | EPA 8141A |
| | Bentazon | 25057890 | Primary MCL | 18 | 2 | EPA 643/ 515.2 |
| | Carbofuran | 1563662 | CDFG Hazard Assess. | 0.5 | 5 | EPA 8318 |
| | 2,4-D | 94757 | Primary MCL | 70 | 10 | EPA 8151A |
| | Dalapon | 75990 | Ambient Water Quality | 110 | 10 | EPA 8151A |
| | 1,2-Dibromo-3-chloropropane (DBCP) | 96128 | Public Health Goal | 0.0017 | 0.01 | EPA 8260B |
| | Di(2-ethylhexyl)adipate | 103231 | USEPA IRIS | 30 | 5 | EPA 8270C |
| | Dinoseb | 88857 | Primary MCL | 7 | 2 | EPA 8151A |
| | Diquat | 85007 | Ambient Water Quality | 0.5 | 4 | EPA 8340/ 549.1/HPLC |
| | Endothal | 145733 | Primary MCL | 100 | 45 | EPA 548.1 |
| | Ethylene Dibromide | 106934 | OEHHA Cancer Risk | 0.0097 | 0.02 | EPA 8260B/ 504 |
| | Glyphosate | 1071836 | Primary MCL | 700 | 25 | HPLC/ EPA 547 |
| | Methoxychlor | 72435 | Public Health Goal | 30 | 10 | EPA 8081A |
| | Molinate (Ordram) | 2212671 | CDFG Hazard Assess. | 13 | 2 | EPA 634 |
| | Oxamyl | 23135220 | Public Health Goal | 50 | 20 | EPA 8318/ 632 |
| | Picloram | 1918021 | Primary MCL | 500 | 1 | EPA 8151A |
| | Simazine (Princep) | 122349 | USEPA IRIS | 3.4 | 1 | EPA 8141A |
| | Thiobencarb | 28249776 | Basin Plan Objective/ Secondary MCL | 1 | 1 | HPLC/ EPA 639 |
| 16 | 2,3,7,8-TCDD (Dioxin) | 1746016 | Calif. Toxics Rule | 1.30E-08 | 5.00E-06 | EPA 8290 (HRGC) MS |
| | 2,4,5-TP (Silvex) | 93765 | Ambient Water Quality | 10 | 1 | EPA 8151A |
| | Diazinon | 333415 | CDFG Hazard Assess. | 0.05 | 0.25 | EPA 8141A/ GCMS |
| | Chlorpyrifos | 2921882 | CDFG Hazard Assess. | 0.014 | 1 | EPA 8141A/ GCMS |

T E N T A T I V E O R D E R

| | | | | | | |
|---|---|---|---|---|---|---|
| **OTHER CONSTITUENTS** | | | | | | |
| | Ammonia (as N) | 7664417 | Ambient Water Quality | 1500 (4) | | EPA 350.1 |
| | Chloride | 16887006 | Agricultural Use | 106,000 | | EPA 300.0 |
| | Flow | | | 1 CFS | | |
| | Hardness (as $CaCO_3$) | | | 5000 | | EPA 130.2 |
| | Foaming Agents (MBAS) | | Secondary MCL | 500 | | SM5540C |
| | Nitrate (as N) | 14797558 | Primary MCL | 10,000 | 2,000 | EPA 300.0 |
| | Nitrite (as N) | 14797650 | Primary MCL | 1000 | 400 | EPA 300.0 |
| | pH | | Basin Plan Objective | 6.5-8.5 | 0.1 | EPA 150.1 |
| | Phosphorus, Total (as P) | 7723140 | USEPA IRIS | 0.14 | | EPA 365.3 |
| | Specific conductance (EC) | | Agricultural Use | 700 umhos/cm | | EPA 120.1 |
| | Sulfate | | Secondary MCL | 250,000 | 500 | EPA 300.0 |
| | Sulfide (as S) | | Taste and Odor | 0.029 | | EPA 376.2 |
| | Sulfite (as $SO_3$) | | No Criteria Available | | | SM4500-SO3 |
| | Temperature | | Basin Plan Objective | $^{o}F$ | | |
| | Total Disolved Solids (TDS) | | Agricultural Use | 450,000 | | EPA 160.1 |
| | | | | | | |

FOOTNOTES:

(1) - The Criterion Concentrations serve only as a point of reference for the selection of the appropriate analytical method. They do not indicate a regulatory decision that the cited concentration is either necessary or sufficient for full protection of beneficial uses. Available technology may require that effluent limits be set lower than these values.

(2) - Freshwater aquatic life criteria for metals are expressed as a function of total hardness (mg/L) in the water body. Values displayed correspond to a total hardness of 40 mg/L.

(3) - For haloethers

(4) - Freshwater aquatic life criteria for ammonia are expressed as a function of pH and temperature of the water body. Values displayed correspond to pH 8.0 and temperature of 22 C.

(5) - For nitrophenols.

(6) - For chlorinated naphthalenes.

(7) - For phthalate esters.

(8) - Basin Plan objective = 2 ug/L for Salt Slough and specific constructed channels in the Grassland watershed.

(9) - Criteria for sum of alpha- and beta- forms.

(10) - Criteria for sum of all PCBs.

(11) - Mercury monitoring shall utilize "ultra-clean" sampling and analytical methods. These methods include:

Method 1669: Sampling Ambient Water for Trace Metals at EPA Water Quality Criteria Levels, US EPA; and

Method 1631: Mercury in Water by Oxidation, Purge and Trap, and Cold Vapor Atomic Fluoresence, US EPA

TENTATIVE ORDER