SOLID WASTE ASSESSMENT TEST (SWAT) PROGRAM

REPORT TO THE INTEGRATED WASTE MANAGEMENT BOARD

96-1CWP
DECEMBER, 1995

Prepared by:

Jonathan H. Mulder, Associate Engineering Geologist
Elizabeth L. Haven, Senior Engineering Geologist
Division of Clean Water Programs

WATER RESOURCES CONTROL BOARD
CALIFORNIA ENVIRONMENTAL PROTECTION AGENCY

STATE OF CALIFORNIA
Gray Davis, Governor

CALIFORNIA ENVIRONMENTAL PROTECTION AGENCY
Winston H. Hickox, Secretary

STATE WATER RESOURCES
CONTROL BOARD
P.O. Box 100
Sacramento, CA 95812-0100
(916) 341-5250
Homepage: http://www.swrcb.ca.gov

Arthur G. Baggett, Jr.,Chair
Peter S. Silva, Vice Chair
Richard Katz, Member

Celeste Cantú, Executive Director
Thomas Howard, Chief Deputy Director
Edward C. Anton, Deputy Director
Dale Claypoole, Assistant Director

7/01

ERRATUM

Please note the following correction.
In the December 1995 Report to the Integrated Waste Management Board, the Kettleman Hills Landfill (WDS ID Number 5D162008001) was erroneously included in Table III (Sites Identified with Waste Constituents Above Hazardous Waste Levels Outside the Waste Management Unit). Instead, it should have been included in Table VI (Sites Identified with No Waste Constituents Outside of the Waste Management Unit).

SOLID WASTE ASSESSMENT TEST (SWAT) PROGRAM

REPORT TO THE INTEGRATED WASTE MANAGEMENT BOARD

96-1CWP
DECEMBER, 1995

Prepared by:

Jonathan H. Mulder, Associate Engineering Geologist
Elizabeth L. Haven, Senior Engineering Geologist
Division of Clean Water Programs

WATER RESOURCES CONTROL BOARD
CALIFORNIA ENVIRONMENTAL PROTECTION AGENCY

TABLE OF CONTENTS

Table of Contents i
Figures and Tables ii
Acknowledgements iii
Executive Summary 1
Program Background 3
Swat Legislation 3
Terminology 3
History of Solid Waste Disposal Site Regulation 4
Siting and Design Requirements 4
Water Quality Monitoring Requirements 4
Program Tasks 6
Site Ranking 6
Exemption Questionnaire 7
Waiver of Swat Reports 7
Review of Swat Reports 7
Notification 8
Follow-Up Activities 8
Technical Guidance Manual 8
Budgetary Constraints 9
Current Swat Status 10
Leakage Characterization 11
Waste Constituents at Hazardous Waste Levels 12
Waste Constituents Above "Regulatory Levels" 13
Waste Constituents Above Background But Below "Regulatory Levels" 14
Chemical Characterization of Site Leakage 14
Hazardous Waste Presence in Landfills 15
Constituent Leakage Categories Compared With Other Site Specific Data 15
Depth to Ground Water 16
Average Annual Precipitation 16
Waste Acceptance Rate 16
Years From Last Waste Acceptance 17
Facility Type 17
Other Site-Specific Parameters 17
Impact of Leakage on Quality and Beneficial Uses of Waters 18
Completed or Proposed Remedial Actions at Leaking Landfills 19
Recommendations Relative to Landfill Design and Monitoring 20
Conclusions 21

FIGURES AND TABLES

Figure 1 Breakdown Pathways for Tetrachloroethane and Tetrachloroethylene . 24
Figure 2 Leakage Exceeding "Beneficial Use" Criteria Limits Compared to Site-Specific Data 25
Figure 3 Leakage Exceeding "Beneficial Use" Criteria Limits Compared to Site-Specific Data 26
Table I SWAT Status for Ranks 1 Through 5 27
Table II Leakage Categories 27
Table III Sites Identified With Waste Constituents Above Hazardous Waste Levels Outside the Waste Management Unit 28
Table IV Sites Identified With Waste Constituents Above "Regulatory Levels" Outside of the Waste Management Unit 29
Table V Sites Identified With Waste Constituents Below "Regulatory Levels" and Above Background Levels Outside of the Waste Management Unit 34
Table VI Sites Identified With No Waste Constituents Outside of the Waste Management Unit 36
Table VII Sites Whose Leakage Status is Undetermined 42
Table VIII Constituent Entries for Sites in All Regions 48
Table IX Chemical Constituents Exceeding "Beneficial Use" Criteria Limits . . 49
Table X Chemical Constituents Exceeding "Beneficial Use" Criteria Limits Compared to Depth to Ground Water (Feet) 51
Table XI Chemical Constituents Exceeding "Beneficial Use" Criteria Limits Compared to Average Annual Precipiatation (Inches) 53
Table XII Chemical Constituents Exceeding "Beneficial Use" Criteria Limits Compared to Waste Acceptance Rate in Tons Per Day 55
Table XIII Chemical Constituents Exceeding "Beneficial Use" Criteria Limits Compared to Closed Sites and Years From Last Waste Acceptance 57
Table XIV Chemical Constituents Exceeding "Beneficial Use" Criteria Limits Compared to Facility Type 59

APPENDIX -- SWAT LEGISLATION 61

ACKNOWLEDGEMENTS

This report was prepared based on work done by and with the support of the Regional Water Quality Control Board SWAT Program staff who supplied essential information and reviews. We extend particular gratitude to James M. Parsons, former SWAT Program Manager, who managed the program almost continuously until his retirement from the SWRCB in August, 1994.

EXECUTIVE SUMMARY

In a 1993 Memorandum of Understanding, the State Water Resources Control Board (**SWRCB**) agreed to submit a comprehensive report on the Solid Waste Assessment Test (**SWAT**) Program to the California Integrated Waste Management Board (**CIWMB**). This report summarizes the work completed to date on the SWAT Program, and addresses both the impacts that leakage from solid waste disposal sites (**SWDS**) may have upon waters of the State and the actions taken to address such leakage.

In 1984, the Legislature passed a law requiring testing of water and air media at all solid waste disposal sites (Chapter 1532, Statutes of 1984) [See Appendix]. In particular regarding water testing, the law added Section 13273 to the Water Code, requiring the SWRCB to rank all solid waste disposal sites in groups of 150 each, according to the threat they may pose to water quality. The law requires the operators of each of the 150 sites in a given rank to submit a water quality "solid waste assessment test" (SWAT) report. In addition, the law requires the Regional Water Quality Control Boards (**RWQCBs**) to evaluate the reports for adequacy of the monitoring networks. If the monitoring networks are adequate, RWQCBs are to determine whether any hazardous waste has migrated into the water, notify the State Department of Toxic Substances Control (**DTSC**)[1] and the California Integrated Waste Management Board (**CIWMB**) of hazardous waste migration, and take appropriate remedial action.

RWQCBs approved a total of 528 reports or exemption questionnaires (for sites with undetermined leak status) in all ranks and waived a total of 16 reports from sites already known to leak. These 544 sites were predominantly from the lower ranks and therefore represented the SWRCB's and the RWQCBs' estimates of the sites most likely to have leaked hazardous wastes into the waters of the State. Of these 544 sites,

- 392 sites [72%] were found to have leaked waste constituents from the waste management unit.
    - 33 of the 544 sites [6%] were classified as leaking wastes at concentrations exceeding hazardous levels.

[1] At the time the law was passed, DTSC was a Division within the Department of Health Services (DHS).

- o 276 of the 544 sites [51%] were determined to be leaking waste constituents above other "regulatory levels".

- o 83 of the 544 sites [15%] were determined to be leaking waste constituents above background levels but below any applicable "regulatory levels".

- 76 of the 544 sites [14%] were not known to be leaking.

- 76 of the 544 sites [14%] are undetermined with regard to their leakage status, in many cases because background water quality cannot be determined.

Thus, the percentage of sites found through the SWAT Program to be leaking waste constituents outside the limits of the landfill is between 72% (if all 76 "undetermined" sites are actually not leaking) and 86% (if all 76 "undetermined" sites are actually leaking).

Because of slight variations in RWQCBs criteria for determining beneficial uses of waters, the exact number of sites which have impacted beneficial uses has not been determined. Using certain assumptions, we estimate that, disregarding "undetermined" leak status sites, about 70% of the tested sites have impacted beneficial uses.

The results of the SWAT Program have particular bearing on the subject of landfill liner design. Specifically, the SWRCB's requirement to use composite liners (i.e., both clay <u>and</u> plastic as a single liner) for new or expanding municipal solid waste landfills has been controversial. Of the 290 sites for which the SWRCB has chemical constituent data, only 23 (8%) of these sites had even a partial liner. Most of the 23 sites' liners were clay-only, and none of the sites were completely composite-lined. The leakage results for partial or non-composite liners were similar to leakage results for unlined landfills, i.e. most leaked and some are unknown if they leak. Thus, the SWAT Program results strongly indicate that unlined and clay-lined landfill designs are not effective in preventing leakage.

Over half of the landfills "closed" longer than 30 years leaked in excess of "beneficial uses" criteria. The leakage data do not indicate when during the landfill's "lifetime" it began to leak; however the SWAT data show that landfills tend to leak even if they have not accepted waste for more than thirty years.

Available data indicate no apparent correlation between the percentage of landfills which leaked and any of the different site-specific factors checked, including depth to

ground water, average annual precipitation, waste acceptance rate, and rock type. Thus, information collected through the SWAT Program demonstrates that unlined or clay-lined landfills leak, regardless of factors such as climate or site-specific geology.

Corrective actions are either in progress or proposed at many of the leaking landfills. RWQCBs are requiring further investigations at most of the remaining sites in order to determine the full extent of constituent migration prior to implementing corrective action to address the leakage.

PROGRAM BACKGROUND

SWAT Legislation

In 1984, the Legislature passed a law requiring testing of water and air media at all solid waste disposal sites (Chapter 1532, Statutes of 1984) [See Appendix]. The law added Section 13273 to the Water Code, requiring the SWRCB to rank all solid waste disposal sites in groups of 150 each, according to the threat they may pose to water quality. The law requires the operators of each of the 150 sites in a given rank to submit a water quality "solid waste assessment test" (SWAT) report. The SWAT reports for each rank are due in consecutive years. In addition, the law requires the RWQCBs to evaluate the reports for adequacy of the monitoring networks. If the networks are adequate, the RWQCBs are to determine whether any hazardous waste has migrated into the water, notify the DTSC and the CIWMB of hazardous waste migration, and take appropriate remedial action.

Terminology

For the purpose of this report, the terms listed below are defined as follows:

Solid Waste Disposal Site (**SWDS**):
The tract of land which is used or has been used for the disposal of solid waste. Usually referred to as a "landfill".

Facility:
An area of land which contains one or more SWDS(s). Facility includes areas outside of the SWDS which may be used for other purposes.

SWAT Site:
A facility which is on the Ranked SWAT List as adopted June 22, 1989.

HISTORY OF SOLID WASTE DISPOSAL SITE REGULATION

Siting and Design Requirements

Pre-1972 Until about 20 years ago, landfill design in California for water quality protection was based on two major "principles". First, for hazardous wastes, it was thought that adequate containment capability would be provided by locating a site either on a clay bed a few tens of feet thick or on crystalline or shaley rock. Second, for non-hazardous wastes, it was thought that adequate containment capability would be provided by locating a site on a 5-foot thickness of dry underlying soil. The prevailing thought was that any fluid that leaked from the landfill would be cleansed during its passage through the soil or would be adequately attenuated before it could reach ground water and impact any beneficial uses.

1972 RWQCBs generally regulated landfills, based on these "principles". However, several publications in the late 1960's pointed out potential problems and suggested appropriate SWDS siting and management policies related to the types of wastes received. Accordingly, in 1972, the SWRCB adopted regulations governing discharges of waste to land [California Code of Regulations (**C.C.R.**) Title 23, Division 3, Chapter 15].

1984 Monitoring data in the late seventies (see next section) indicated that fluids leaked from landfills were reaching ground water. As a result, the SWRCB revised the Chapter 15 regulations in 1984 including specific siting and containment requirements for SWDSs.

1993 In response to federal Subtitle D requirements, the SWRCB adopted its Policy for Municipal Solid Waste Landfills (Resolution No. 93-62), This Policy requires new and expanding landfills to have composite (i.e., clay and plastic) liners.

Water Quality Monitoring Requirements

Pre-1972 Until about 20 years ago, analysis of water quality to detect impacts from landfills focused primarily on general minerals and aquatic biota

survival analyses, including major cations and anions, biological oxygen demand, chemical oxygen demand, and bacteria counts.

1972 The SWRCB adopted Chapter 15 regulations requiring only minimal ground water monitoring. A landfill's impact on water quality was generally determined by occasional sampling of a nearby well. The sampled wells were rarely designed for monitoring use; rather they were generally water production wells with multiple screened zones and high-volume pumps. Little was known regarding screen depths or site hydrogeology. As a result, most of this monitoring revealed little about any landfill leakage.

1984 An increased awareness of the adverse environmental and health effects caused by many common organic compounds prompted the inclusion of organic compounds in water quality analyses from landfills. These analyses indicated that volatile organic compounds (**VOCs**), particularly vinyl chloride, trichloroethylene, and tetrachloroethylene, were found in ground water near landfills. In addition, semi-volatile organic compounds (**SVOCs**) such as toluene, benzene, and xylene were detected in ground water near landfills. In many cases, these VOCs and SVOCs were detected at concentrations exceeding their Maximum Contaminant Levels or other regulatory level. The organic compounds were detected in ground water beneath both nonhazardous waste landfills (e.g., municipal solid waste landfills), and hazardous waste landfills.

The 1984 Chapter 15 revisions required landfill operators to prepare a monitoring plan for all <u>active</u> landfills; the decision as to whether to monitor an inactive landfill was at the discretion of the RWQCB, based on potential threat to water quality. Monitoring wells were to be designed specifically for the purpose of ground water monitoring. After the RWQCB approved the plan, the discharger was to establish monitoring points and start monitoring. By the time the SWAT Program started in 1986, few such monitoring programs had been established.

1991 Earlier findings from the SWAT program indicated that many landfills had impacted ground water. Furthermore, the use of gas chromatograph and mass spectrograph technologies led to a decrease in the detection limits of analytical methods. Analytical precision improved to commonly better than one part per billion and sometimes nearly one part per trillion. Toxicological research led state and federal agencies to set regulatory levels, such as the Maximum Contaminant Levels, frequently

below the one part per billion range. Chapter 15 was revised to allow clean-up levels no higher than the Maximum Contaminant Levels or other applicable health-based standards in 1991. The revisions included provisions requiring vadose zone monitoring, to allow for the earliest possible indication of a release from the landfill.

PROGRAM TASKS

Site Ranking

During 1985, candidate sites for the SWAT rank list were gathered from several sources. The major sources were:

1) SWRCB/RWQCB Waste Discharge System database,
2) California Integrated Waste Management Board listings,
3) Sites listed in County Solid Waste Management Plans,
4) Sites listed in California Department of Health Services reports from 1968 and 1973,
5) Sites listed by the South Coast Air Quality Management District,
6) An unpublished 1985 inventory by the Los Angeles County Engineer's office, and
7) Sites recommended by RWQCB staff but otherwise not on an existing list.

The SWRCB first adopted a SWAT rank list in December 1985. It was comprised of approximately 1,800 sites ranked according to their expected threat to water quality. RWQCB staff later determined that the original rank list contained some sites that were: 1) duplicated as another site name on the list, 2) proposed, but never operated, or 3) not actually subject to the SWAT legislation, such as wrecking yards, spill sites, and industrial surface impoundments. The RWQCBs did not require SWAT reports of this third category of sites once they determined that they were not subject to the SWAT legislation.

The rank list was revised in October 1986, December 1986, December 1987 and June 1989 to include additional sites and to delete sites that were determined to not be subject to the SWAT legislation. The current rank list (adopted June 22, 1989) contains 2,242 sites. Landfills constructed after June 1989 are not on the current list. Since the last re-ranking in 1989 and as work continued on the SWAT Program, RWQCBs designated a small number of additional sites on the rank list as not subject to SWAT.

Occasionally, a specific facility may have two or more distinct waste management units, primarily large industrial or military sites. Generally, the entire facility was

treated as a single entity, and only one SWAT report was submitted. In a few cases, the waste management units were listed in different ranks, and separate SWAT reports were submitted for the waste management units.

Exemption Questionnaire

The SWAT legislation was amended in 1987 to permit site operators only in Ranks 3 and greater to submit a Solid Waste exemption questionnaire. The questionnaire allowed RWQCBs to exempt an operator of a site from submitting a full SWAT report provided that the following conditions were met: 1) the site capacity was less than 50,000 cubic yards; and 2) hazardous waste had not been discharged to the unit. Small sites in rural counties were typical candidates for exemption. ***Exemption resulted in no monitoring data being submitted for the SWAT program to determine whether the landfill leaks.***

Waiver of SWAT Reports

The SWAT legislation provides that a RWQCB may waive the submittal of a SWAT report if it determines from other information that hazardous wastes are already migrating into the waters of the State. ***The issuance of a waiver means that the landfill leaks hazardous waste, based on other available data.***

Review of SWAT Reports

Under SWAT legislation, RWQCB staff review SWAT reports and decide whether to accept the report as complete or to require the site operator to perform additional work. Initially, the acceptance criteria included the determination that the monitoring network complied with the requirements of Chapter 15, Article 5, thus minimizing the possibility of false leakage indication. In 1993, however, the acceptance criteria were revised such that SWAT reports were approved for sites that showed significant leakage regardless of the monitoring system's completeness. This allowed for quicker approval of reports and for fewer resources to be expended at this stage.

In an effort to expedite a cost-effective review of SWAT reports for facilities in the Department of Defense Environmental Restoration Program (**DERP**), many SWAT sites at military facilities were reviewed in conjunction with ongoing DERP activities. Funding for these efforts were through the Department of Defense/State Memorandum of Agreement, beginning with Fiscal Year 1991-92.

Notification

Law requires RWQCBs to notify DTSC (formerly DHS) whenever: (1) the RWQCB waived the requirement for a SWAT report (i.e., site was known to leak), or (2) a SWAT report finding indicated hazardous waste leakage. In the case of waived sites, actions to address the leakage were generally being implemented with oversight by DTSC. For example, because DTSC monitors many Superfund site cleanups, it is already aware of their hazardous waste leakage status. In the case of federal military facilities, actions at the waived site are being addressed under the Department of Defense Installation Remediation Program.

Follow-up Activities

There is no specific provision in the SWAT legislation for follow-up investigations to determine the magnitude of any identified leak or to design a cleanup program. These tasks are generally undertaken in compliance with requirements in Chapter 15 regulations. RWQCB actions on these matters are prioritized based on the leak's threat to water quality and impact on beneficial uses.

Technical Guidance Manual

In 1988, the SWRCB produced a SWAT Technical Guidance Manual for use by RWQCB staff in reviewing SWAT reports, and by owners/operators in preparing SWAT reports. The manual recommended that the following basic information be in a SWAT report:

1) Description of the disposal site and its history.
2) Thorough description of the site hydrogeology.
3) Rationale for the location and design of all monitoring points.
4) Well logs and sample analysis data.
5) Interpretation of the data relative to hazardous waste leakage.
6) Certification of the preparer's credentials.

The manual emphasized the following:

1) Initial submittal of a SWAT Proposal or "Workplan" to the RWQCB containing the operator's plans for compliance with the SWAT law.
2) Establishment of a monitoring network that meets all requirements of California Code of Regulations, Title 23, Division 3, Chapter 15.

3) Either inclusion of upgradient monitoring points or acceptance of responsibility by the owner/operator for all pollutants detected through downgradient monitoring.
4) Sampling at least four different times over a year in order to ensure detecting any seasonal discharges.
5) Analysis of water quality samples for:
   a) Volatile Organics (EPA 624)
   b) Semi-volatile Organics (EPA 625)
   c) ICAP Metals
6) Quality Control/Quality Assurance of all laboratory chemical analyses.

The SWAT Program focused on ground water monitoring. However, in cases where there was an apparent threat to surface water quality, surface water monitoring points were also to be established.

The SWAT legislation required vadose zone monitoring. RWQCBs often waived this requirement for sites where the waste was very close to or present in the ground water; that is, where little or no vadose zone existed, and where it was assumed that the ground water analysis would show any leakage. In the early part of the Program, RWQCBs often "waived" vadose zone monitoring because of a prevalent lack of understanding of the methods for installation and operation of lysimeters or related means for vadose zone monitoring.

In a few cases, a site was already being addressed as required by SWAT legislation through another program or action by the RWQCB. In those cases, RWQCBs could consider reports submitted for the other program or action to be equivalent to a SWAT report. Examples include submittals of Hydrogeological Assessment Reports (**HARs**) for compliance with the Toxic Pit Cleanup Act, reports prepared in response to a Cleanup and Abatement Order, or monitoring under the core regulatory waste discharge requirement program for waste discharges to land (Chapter 15).

BUDGETARY CONSTRAINTS

When the SWAT Program was initiated in 1986, it was adequately funded, and RWQCBs were able to complete their review of SWAT reports in a timely manner. However, beginning in 1988, in response to a General Fund cut, the SWRCB had to reduce SWAT funding significantly. As a result, a backlog of submitted SWAT reports began to grow. In response, RWQCB staff eliminated their reviews of SWAT workplans and focused exclusively on SWAT reports and questionnaires. SWAT funding was cut completely during Fiscal Year 1991-92.

Late in 1992, the Legislature appropriated $2,500,000 to the SWRCB from the Integrated Waste Management Account, which primarily funded the CIWMB. This appropriation was to eliminate the backlog of unreviewed Ranks 1 through 5 SWAT reports only. The funding was allocated as follows: 30% to Fiscal Year 1992-93, 60% to Fiscal Year 1993-94, and 10% to Fiscal Year 1994-95.

CURRENT SWAT STATUS

The SWAT report status for each of the 750 Ranks 1 through 5 sites is displayed in Table I. Following is a description of the SWAT report status categories:

REPORT APPROVED	RWQCB has approved the SWAT report.
EXEMPTED BY QUESTIONNAIRE (UNDETERMINED IF LEAKED)	Operator has submitted a SWAT Questionnaire which indicates that the site meets statutory criteria, (specifically, site no larger than 50,000 cubic yards and no hazardous waste disposal therefore no determination of leakage must be made).
WAIVED FROM SWAT (KNOWN TO LEAK)	RWQCB staff has determined that hazardous waste leakage has occurred, and a SWAT report is not required.
UNDER REVIEW	RWQCB is currently reviewing the report.
RETURNED FOR ADDITIONAL INFORMATION	RWQCB has begun review of the report but has returned it for additional information.
PENDING REVIEW	RWQCB has received the report but has not begun review of the report.
LATE	RWQCB has requested a SWAT report but it was not received before the submittal deadline.
NOT YET NOTIFIED	RWQCB has not yet requested a SWAT report submittal.
POSSIBLY NOT SWAT	The site possibly may not be subject to the SWAT Program.
NO JURISDICTION	RWQCB has determined that the site is not actually subject to the SWAT Program. (Sites are generally covered under

another program, such as Toxic Pits Cleanup Act, or Spills, Leaks, Investigation, and Cleanups.)

DUPLICATE SITE — The site is listed more than once in the ranked list.

Ranks 1 through 5

As of the date of this report, operators of 562 of the 750 sites in Ranks 1 through 5 have submitted a SWAT report or exemption questionnaire (undetermined leak status). RWQCBs have waived an additional 16 sites from SWAT requirements (because they are known to leak). Of the 562 reports or questionnaires, 513 have been approved. Forty-nine (49) reports: (1) are under review, (2) were returned for additional information, or (3) are pending review. Operators for 136 sites are late in submitting their reports or have not been notified yet, and operators for 36 sites will not submit a report because the sites are: (1) duplicate sites, (2) possibly not SWAT sites, or (3) not under SWAT jurisdiction. Table I displays the status for the 750 sites in Ranks 1 through 5.

Ranks 6 or greater

In addition to sites in Ranks 1 through 5, some RWQCBs have performed work on sites in Rank 6 or greater. As of the date of this report, RWQCBs have approved eleven SWAT reports and four exemption questionnaires (undetermined leak status) from Rank 6 or greater.

LEAKAGE CHARACTERIZATION

Of the 544 sites[2] whose SWAT reports or Questionnaires that are approved or waived (known to leak), between 392 and 468 (i.e., 72% to 86% of the total) sites were found to have waste constituents outside the limits of the waste management unit (Table II). Tables III, IV, and V identify specific sites and the degree of leakage. Table VI shows those sites not known to leak. Table VII shows those sites where leakage status is undetermined.

---

[2] The total number of SWAT sites addressed in this and the following sections is derived from the following:

Approved reports or exemption questionnaires from Ranks 1 through 5:	513
Waived sites from Ranks 1 through 5:	15
Approved reports or exemption questionnaires from Ranks 5 or greater:	16
	544

Waste constituents in the surrounding media *exceed hazardous waste concentrations* at only 33 sites. Rather, at the vast majority of the sites, waste constituents in the surrounding media *exceed other regulatory levels* or *exceed background levels only*. The following three sections discuss the three categories of leakage.

A. Waste Constituents at Hazardous Waste Levels

The term "hazardous waste" is defined similarly although not identically in both Health and Safety Code Section 25117 and Public Resources Code Section 40141. In determining whether any detected leakage is hazardous, the RWQCB must apply the definitions cited above, as well as the criteria contained in DTSC's regulations (CCR, Title 22, Division 4.5, Chapter 11). These criteria define whether a substance is hazardous by virtue of its toxicity, ignitability, reactivity, or corrosivity. In addition, the regulations contain lists of persistent and bioaccumulative toxicity concentration limits for a limited number of inorganic and organic chemicals. Any substance that exceeds any of the stated criteria must be considered hazardous. If analyses of SWAT report sampling data indicate any chemical concentrations in the surrounding media above the established hazardous waste concentration levels, the media where leakage was detected is classified as hazardous waste.

Thirty-three (33) sites were classified as leaking wastes such that the concentrations in the media are considered to be hazardous (see Table III). Of these 33 sites, RWQCBs waived 16 sites from submitting a SWAT report, based on existing information showing the site to be leaking at hazardous waste levels. At the remaining sites, SWAT report data indicated that the types of leakage were heavy metals, VOCs, or, in one case, a pH level constituting hazardous waste.

Many SWAT sites are leaking waste constituents which have impacted or may adversely impact water quality, but which are detected at concentrations which do not exceed hazardous waste criteria, as discussed above. A constituent's concentration tends to vary inversely with the distance from the waste management unit. That is, in general, the farther the monitoring point is from the waste management unit, the less likely that the sampled medium is at hazardous waste concentrations. Thus, a waste management unit may leak hazardous waste (e.g., heavy metals); however, the leakage as detected at the monitoring point may be classified as non-hazardous waste due to its relatively low concentration. As a result, the SWAT Program uses two additional leakage categories to evaluate adverse water quality effects from waste constituents not classified as hazardous waste. These are Waste Constituents above "Regulatory Levels", and Waste Constituents below "Regulatory Levels", discussed below.

B. Waste Constituents Above "Regulatory Levels"

This category is used for those reported analyses that do not show chemical concentrations in the surrounding media above hazardous levels as discussed above, but which do show concentrations above one of the following water quality standards:

1) Drinking Water Standards (California and Federal) Maximum Contaminant Levels (**MCLs**). Includes both primary and secondary DTSC and USEPA MCLs as well as USEPA MCL goals.

2) California Recommended Public Health Level (**RPHL**), Department of Health Services

3) California State Action Levels for toxicity or taste & odor, (DHS).

4) Other taste and odor thresholds.

5) Health Advisories or Suggested No-Adverse-Response Levels (**SNARLS**) for toxicity other than cancer risk by USEPA or the National Academy of Sciences.

6) USEPA Integrated Risk Information System (**IRIS**) Reference Dose as a Water Quality Criterion.

7) One-in-a-Million Incremental Cancer Risk Estimates for Drinking Water.

   a) Cal/EPA Cancer Potency Factor.

   b) USEPA Integrated Risk Information System (IRIS).

   c) USEPA Health Advisory or SNARL.

   d) National Academy of Sciences Drinking Water and Health.

   8) California Proposition 65 Regulatory Level as a Water Quality Criterion.

   9) Agricultural Water Quality Goals.

The concentration limits for each of the above goals are tabulated in A Compilation of Water Quality Goals, a staff report prepared by Dr. Jon Marshack of the Central Valley Regional Water Quality Control Board.

Two hundred seventy-six (276) sites were determined to be leaking waste constituents above "regulatory levels" but below hazardous waste levels (see Table IV). Most of these sites leaked VOCs and SVOCs, primarily trichlorethylene, benzene, vinyl chloride, and tetrachloroethylene. Arsenic, lead, and cyanide were detected at approximately 15% of these sites. At only a few sites (4%), general minerals (e.g. iron and manganese) were detected above "regulatory levels".

C. Waste Constituents Above Background but Below "Regulatory Levels"

This category is used for those reported analyses indicating leakage from the site, but in concentrations below any applicable "regulatory levels". This category includes many naturally-occurring constituents (e.g., sodium and bicarbonate), which indicate an elevated concentration downgradient from the landfill. In addition, this category includes man-made constituents (primarily organics) for which there are no established "regulatory levels".

Eighty-three (83) sites were determined to be leaking waste constituents below "regulatory levels", if any exist for that constituent (see Table V). Most sites in this category indicated leakage of VOCs and SVOCs, but at concentrations below "regulatory levels". However, in cases where background concentrations of naturally-occurring constituents were known, concentration increases of these constituents found downgradient from the landfills indicated that the landfills were impacting water quality.

Table VI lists the 76 [14%] sites at which waste constituents were not found in media near the waste management unit. Table VII lists the 76 [14%] sites whose leakage status is undetermined. A frequent cause of undetermined leakage status is that background water quality is not well known or is impacted by an adjacent source upgradient of the landfill, and therefore the exact source of constituents found in the waters near the site is unknown.

CHEMICAL CHARACTERIZATION OF SITE LEAKAGE

RWQCB staff have provided information on the specific type of constituent leakage for over half of the 544 approved, waived (known to leak), and exempted (leakage status undetermined) sites (See Table VIII). The table shows the maximum concentrations of 60 constituents in five media (background ground water, surface water, ground water, vadose zone, and leachate). In addition to the 60 constituents, RWQCB staff have provided information on other constituents which they considered to be a significant threat to waters of the State.

In addition to information on leakage category supplied by RWQCB staff, SWRCB staff used a computer program to classify leakage by comparing constituent values against "regulatory levels". When the program found that organic compounds were detected but not at concentrations above "regulatory levels", it identified the site as leaking, based upon the premise that organic compounds occur very rarely in background ground water analyses. As a result of the computer scan, some sites may be identified as leaking even though the submitted SWAT report states that an upgradient source is the cause of the exceedance. Table IX displays the type of constituent (i.e., general minerals, metals, and organic compounds) and number of occurrences for sites leaking above "beneficial use" criteria limits.

Organic compounds are the most prevalent constituents found in all three leakage categories. The most common constituents, in order of decreasing occurrence, are trichloroethylene, benzene, vinyl chloride, tetrachloroethylene, and dichloromethane . Figure 1 displays the breakdown pathways for tetrachloroethane and tetrachloroethylene. It is possible that the high occurrences of trichloroethylene and vinyl chloride can partly be attributed to decomposition of tetrachloroethylene.

Arsenic, lead, and sodium were the most frequently detected metals. General minerals rarely have designated regulatory levels; exceptions include chloride (secondary MCLs) and nitrate (primary MCLs). As a result, general minerals were most prevalent in the leakage below "regulatory levels" category.

HAZARDOUS WASTE PRESENCE IN LANDFILLS

Most of the landfills investigated under the SWAT Program received primarily municipal solid waste (**MSW**), and to a lesser extent, nonhazardous industrial waste. MSW contains relatively small amounts of hazardous waste, called "household hazardous waste". Less than ten SWAT sites were permitted to receive hazardous waste. However, because SWAT data shows that at a number of sites hazardous waste has migrated into the surrounding media, it is possible that more than the ten sites received more hazardous waste than the incidental amounts typically found in MSW. It is also possible that some nonhazardous constituents break down into hazardous constituents under prevailing conditions within the landfill.

CONSTITUENT LEAKAGE CATEGORIES COMPARED WITH OTHER SITE-SPECIFIC DATA

Chemical constituent data were available for only 270 of the total 544 approved, waived, or exempted SWAT sites. Sites for which actual chemical constituent data

were available, were evaluated for any trends with respect to site-specific information such as climate and geology. Only those sites for which chemical constituent data are available, and for which the leakage exceeded "beneficial use" criteria, described in a previous section, were included in these comparisons.

Tables X through XIV display the specific constituent leakage compared with other site-specific data, including depth to ground water, average annual precipitation, and length of time since closure. Figures 2 and 3 present this information in graphical format. There are no apparent correlations regarding the above site-specific parameters and the percentage of landfills which are leaking. Specific discussions regarding the site-specific parameters follow.

Depth to Ground Water (Table X)

At the tested SWAT sites, ground water ranged from less than ten feet to over five hundred feet deep. Ground water depth was thirty feet or less at almost half of the sites for which depth was known. There was no apparent correlation between the percentage of landfills which leaked in excess of "beneficial use" criteria and the depth to ground water. The data in Table X indicate that unlined or clay-lined landfills leak regardless of depth to ground water.

Average Annual Precipitation (Table XI)

Average annual precipitation ranged from less than five inches to more than 50 inches per year. Over three-quarters of the sites were in the 10 to 40 inch per year precipitation category. There was no apparent correlation between the percentage of landfills which leaked in excess of "beneficial use" criteria and the average annual precipitation. The data in Table XI indicate that unlined or clay-lined landfills leak regardless of precipitation.

Waste Acceptance Rate (Table XII)

The waste acceptance rate ranged from a few sites which accept less than 10 tons per day to sites accepting more than 1000 tons per day. While it may appear that there is an upward trend in percent leaking as waste acceptance increases, it should be noted that the data are sparse and that, for example, the percentage of leaking landfills accepting between 300 and 400 tons per day is similar to the percentage of leaking landfills accepting between 0 and 10 tons per day. Thus, there is no reliable correlation between waste acceptance rate and the percent of unlined or clay-lined landfills which leaked in excess of "beneficial use" criteria.

Years From Last Waste Acceptance (Table XIII)

Of the sites for which data on the "years since last waste acceptance" are available, almost half were "closed" (engineered caps were generally never installed) between ten and twenty-five years ago.

One significant finding of this comparison is that five of the eight (63%) of the sites "closed" longer than 30 years leaked in excess of "beneficial uses" criteria. The thirty-year time period is of interest in that federal regulations require maintenance of closed landfills only for thirty years, whereas the SWRCB requires the landfill to be maintained, monitored, and remediated if necessary for as long as the wastes pose a threat to water quality. The leakage data do not indicate when during the landfill's "lifetime" it began to leak; however, the SWAT data show that unlined or clay-lined landfills tend to leak even if they have not accepted waste for more than thirty years.

Facility Type (Table XIV)

The facility type indicates current facility designation only, and does not reflect any previous classifications. The facility may include several SWDSs. In general, only one SWAT report was submitted for each facility. There was no apparent correlation between facility type and the percentage of landfills which leaked in excess of "beneficial uses" criteria.

Over two-thirds of the sites are classified as Class III solid waste disposal sites in the database. Class III is the classification of a landfill that can accept nonhazardous solid waste (including municipal solid waste), according to 1984 Chapter 15. Sixty-nine (71%) of currently-classified Class III landfills leaked in excess of these criteria.

Chemical data were available for three facilities classified as Class I under Chapter 15. These were old military or large industrial sites which included unlined disposal areas or poorly-lined surface impoundments.

Other Site-Specific Parameters

Other site-specific parameters were checked relative to the percentage of landfills which leaked in excess of "beneficial use" criteria, but no apparent trends were found. These parameters included: site geology (rock type), presence of a liner, current operating status, and owner/operator type.

Site Geology: The site's rock type was classified as Quaternary alluvium, marine sediments, weathered bedrock, or "other". The percentage of landfills leaking above "beneficial use" criteria did not vary by rock type.

Presence of a Liner: Since 1993, the SWRCB has required new or expanding MSW landfills to have a composite (i.e., clay and plastic) liner. None of the SWAT sites had a composite liner throughout the entire area where waste has been emplaced. Only 23 of the 290 (8%) SWAT sites for which the SWRCB has chemical constituent data had even a partial liner, and most of these partial liners were non-composite (e.g., clay only). Therefore, landfill leakage detected through the SWAT Program has primarily originated from unlined, but also from clay-lined, landfills. There was no apparent difference in leakage between unlined and non-composite lined sites.

Current Operating Status: One hundred twenty-one landfills [45%] were operating. There was no apparent relationship between a site's operating status and its leakage status. Seventy percent of the operating sites leaked in excess of "beneficial use" criteria, as opposed to seventy-one percent of the non-operating sites.

Owner/Operator Type: There were 143 government-owned sites and 74 privately-owned sites in the data set. There was virtually no difference in leakage, as 70% of the publicly-owned landfills leaked in excess of "beneficial use" criteria, as did 72% of the privately-owned landfills.

IMPACT OF LEAKAGE ON QUALITY AND BENEFICIAL USES OF WATERS

All RWQCBs have adopted Water Quality Control Plans (**Basin Plans**) which identify beneficial uses of surface and ground waters in basins within the Regions. Generally, unless specifically noted otherwise, ground water beneficial uses include at least the following designations:

MUNICIPAL — Municipal and domestic supply. Includes normal domestic community uses, through both municipal water supply systems and individual systems.

AGRICULTURAL — Agricultural supply. Includes crop and pasture irrigation, stock watering, support of vegetation for range grazing, and all such uses which support farming and ranging operations.

INDUSTRIAL Industrial Service Supply. Includes uses which do not particularly depend on water quality, such as mining, cooling water supply, hydraulic conveyance, gravel washing, fire protection, and oil well pressurization.

In 1988, the SWRCB adopted Resolution No. 88-63, the "Sources of Drinking Water" policy. This policy specifies that, except under specifically defined circumstances, all surface and ground waters of the State are to be protected as existing, or potential sources of municipal and domestic supply, unless this beneficial use is explicitly de-designated in a water quality control plan. Specific circumstances for de-designation include waters with existing high TDS concentrations (greater than 3000 mg/l), low sustainable yield (less than 200 gallons per day for a single well), waters within particular municipal, industrial, and agricultural wastewater conveyance and holding facilities, and regulated geothermal ground waters. The application of one or more of these exemptions to remove the municipal or domestic supply designation for a particular body of water requires a formal Basin Plan amendment, a public hearing by the appropriate RWQCB, and approval by the SWRCB.

We have not ascertained an exact number of leaking SWAT sites that have impacted beneficial uses of the waters of the State because of the slight variations in RWQCBs' criteria for determining impacts on beneficial uses of the waters of the State. A typical approach of a RWQCB may be to consider that when USEPA primary or secondary MCLs, DHS primary or secondary MCLs, DHS Toxicity Action Levels or Proposition 65 levels have been exceeded, the beneficial uses of the water have been impacted. Using these "beneficial use" criteria, we have determined that approximately 70% of the 270 SWDSs for which chemical data are available have impacted beneficial uses.

Instances where degradation of the ground water to the point of impacting existing drinking water wells are rare. To date, of the 392 sites where waste constituents have been detected outside the waste management unit, seven sites were found to have impacted drinking water wells. Continued uncontrolled releases from the landfills, however, would likely lead to more impacted drinking water wells. The releases in ground water may impact future probable beneficial uses as well.

COMPLETED OR PROPOSED REMEDIAL ACTIONS AT LEAKING LANDFILLS

Remedial actions are underway or proposed at many of the sites identified through the SWAT Program to be leaking. At many sites, additional investigation is underway to

determine the full extent of pollution prior to implementing remedial actions. In a few cases, subsurface pollution at low level concentrations warrants further investigation to determine whether the pollution is from the landfill or from another nearby source. These types of investigation fall under verification monitoring in Chapter 15.

Remedial actions range from initiating verification monitoring (generally at sites where non-organic constituents are only slightly above background levels) to installation of ground water or gas extraction wells or slurry walls around the perimeter of the site.

RWQCBs, particularly those in the southern, more arid portions of the State, have noted that landfill gas (primarily VOCs) emanating from a SWAT site has affected the surrounding media. Evidence of landfill gas impacting ground water is supported by the relative absence of leachate indicators (e.g., chlorides, iron, and carbonates) in the ground water, and by the presence of VOCs in upgradient locations where no other source is suspected. Gas extraction systems are being designed or are in place at most of the sites with VOCs where landfill gas impacts are suspected.

RECOMMENDATIONS RELATIVE TO LANDFILL DESIGN AND MONITORING

As discussed in the section comparing leakage with site-specific data, landfill leakage detected through the SWAT Program has primarily originated from unlined, but also from clay-lined, landfills. These results support the need for adequate landfill design, including the SWRCB's requirements for composite liners for new and expanding MSW landfills.

A coordinated investigation between the RWQCB and the Local Enforcement Agency (**LEA**) should commence when VOCs have been detected in the ground water or vadose zone at both upgradient and downgradient sampling points. The investigation might include landfill gas monitoring to determine the landfill gas composition and amount, vadose zone monitoring to verify the absence of leachate, better characterization of the waste for both constituents and degree of saturation, and characterization of the subsurface geology. Using the information from this investigation, a clearer evaluation of the extent to which landfill gas is impacting ground water, and the extent to which landfill gas control can be expected to improve ground water quality, can be made. A coordinated investigation will also help ensure that any gas system installed as a result of the investigation will meet both water quality and health and safety needs.

Because water contributes to both sources of landfill leakage, namely leachate and landfill gas, it follows logically that infiltration of water into landfills should be reduced in order to minimize leakage. Accordingly, grading of the landfill surfaces to divert rainwater away from the waste management unit should continue to be required. Similarly, excessive use or ponding of dust control water should continue to be discouraged. In addition, materials used for intermediate and final covers should be sufficiently impermeable to prevent excessive percolation of water into the waste.

SWAT investigations have detected the presence of hazardous constituents at sites that were not permitted to accept hazardous waste. Load checking programs were required in 1984 by Chapter 15. Screening of incoming loads at the landfill entrance and at the working face should continue to be implemented to prevent unintentional acceptance of hazardous waste.

CONCLUSIONS

The results of the SWAT Program to date offer significant data relevant to several current issues in the regulation of landfills for water quality protection. Three primary conclusions can be drawn from the SWAT data.

- There is clearly a need for well-designed composite liners and leachate collection systems at new and expanding MSW landfills, in order to protect water quality. This need exists regardless of climate and site hydrogeology considerations.

- Continued restriction on disposal of hazardous or designated wastes at unlined or clay-lined facilities is necessary to protect water quality.

- A long (greater than thirty years) post-closure maintenance period is necessary to protect water quality at many landfill sites. Post-closure maintenance should continue to include ongoing water quality monitoring.

Also, while not directly addressed through the SWAT Program, it is nevertheless evident that efforts to minimize the infiltration of moisture into unlined or clay-lined landfills should be continued. This should apply to both operating and closed landfills, in order to minimize leachate and gas generation and thus protect water quality.

We expect that further review of SWAT reports for higher-rank sites would show the same basic trend of landfill leakage. However, the overall percentage of leaking sites would probably decrease somewhat, because the higher-rank sites are expected to pose

a lower threat to ground water quality. Should the SWAT Program receive additional funding allowing RWQCBs to review reports from Ranks 6 and greater, it would be possible to determine whether there is any effect on overall landfill leakage rates from the inclusion of lower-risk sites.

FIGURES, TABLES, & APPENDIX

FIGURE 1

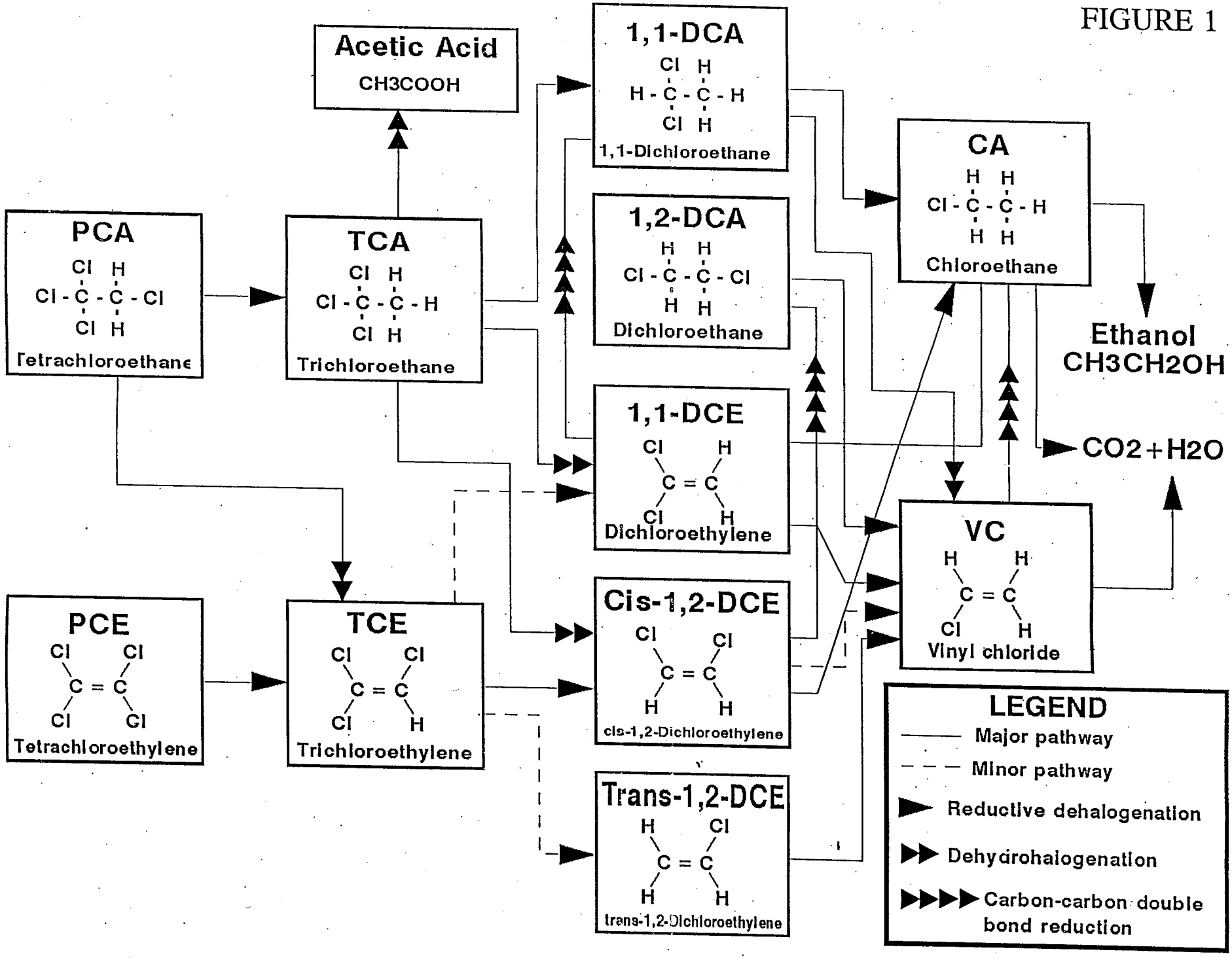
Acetic Acid
CH3COOH
1,1-DCA
1,1-Dichloroethane
1,2-DCA
Dichloroethane
CA
Chloroethane
PCA
Tetrachloroethane
TCA
Trichloroethane
1,1-DCE
Dichloroethylene
Ethanol
CH3CH2OH
CO2+H2O
VC
Vinyl chloride
PCE
Tetrachloroethylene
TCE
Trichloroethylene
Cis-1,2-DCE
cis-1,2-Dichloroethylene
Trans-1,2-DCE
trans-1,2-Dichloroethylene
LEGEND
Major pathway
Minor pathway
Reductive dehalogenation
Dehydrohalogenation
Carbon-carbon double bond reduction

LEAKAGE EXCEEDING "BENEFICIAL USE" CRITERIA LIMITS COMPARED TO SITE-SPECIFIC DATA

FIGURE 2

DEPTH TO GROUND WATER

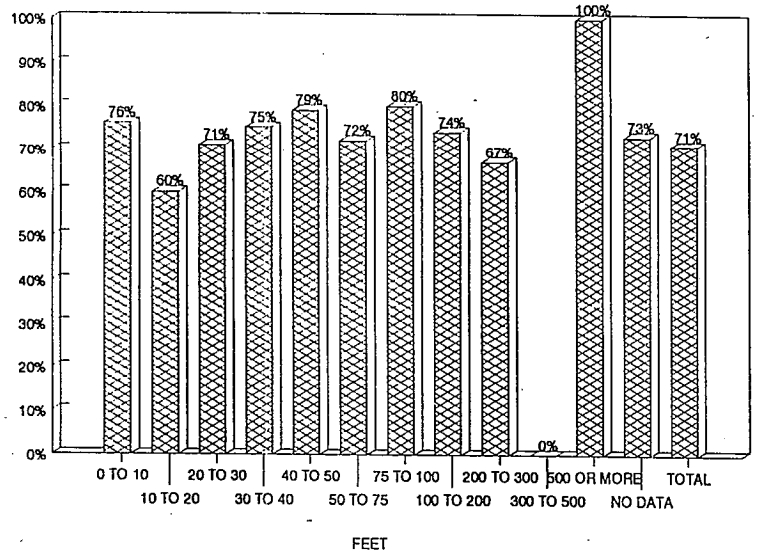

AVERAGE ANNUAL PRECIPITATION

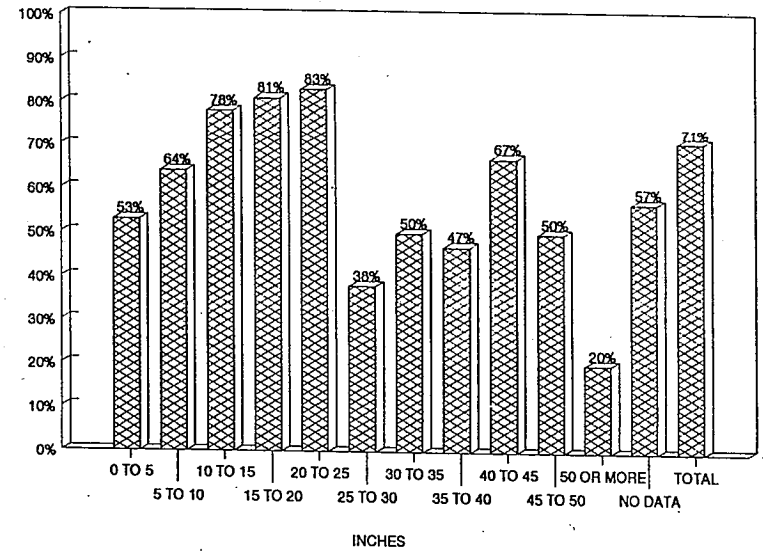

WASTE ACCEPTANCE RATE

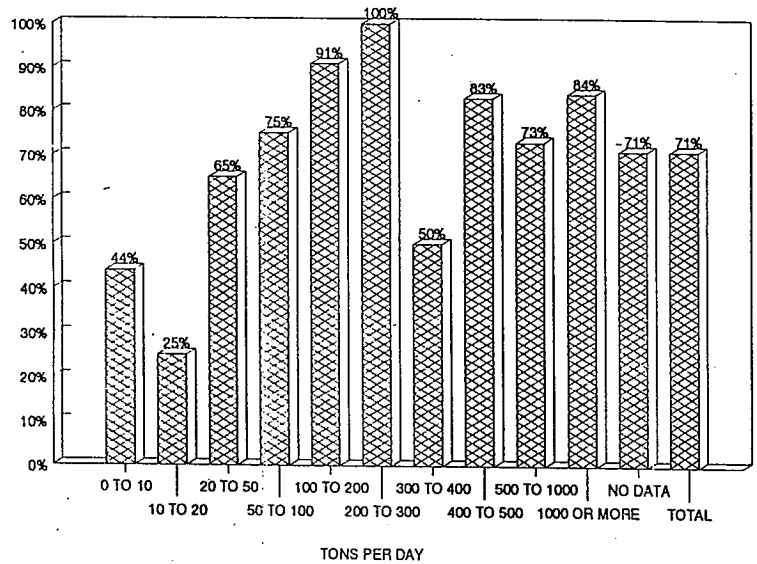

INTERVAL SINCE LAST WASTE ACCEPTANCE

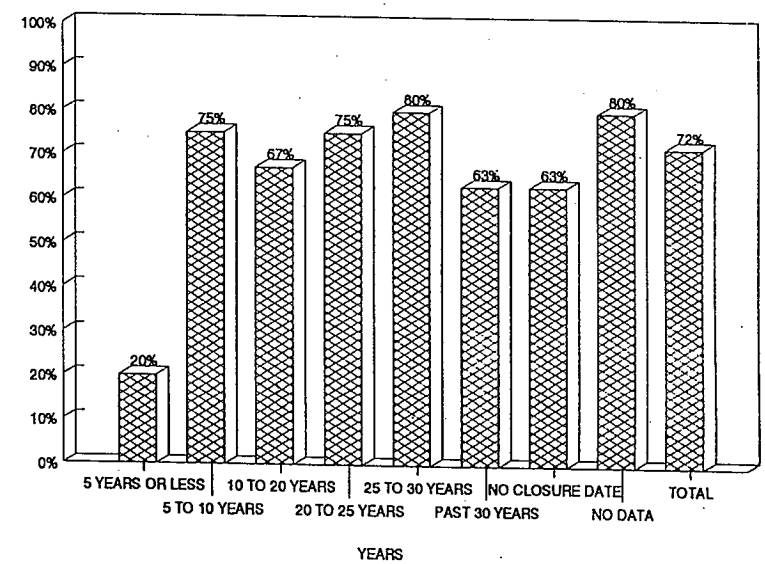

LEAKAGE EXCEEDING "BENEFICIAL USE" CRITERIA LIMITS COMPARED TO SITE--SPECIFIC DATA

FIGURE 3

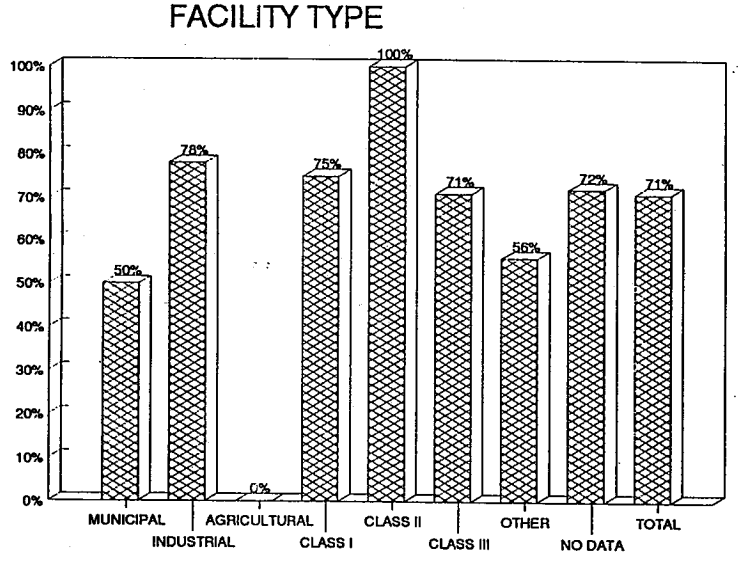

TABLE I

SWAT REPORT STATUS FOR RANKS 1 THROUGH 5

	TOTAL	RANK 1	RANK 2	RANK 3	RANK 4	RANK 5
REPORT APPROVED	468	124	116	103	73	52
EXEMPTED BY QUEST	45	0	0	4	26	15
UNDER REVIEW	21	1	5	7	4	4
RETURNED FOR REV.	22	3	11	5	2	1
PENDING REVIEW	6	0	0	2	3	1
LATE	109	2	8	20	32	47
NOT NOTIFIED	27	0	0	0	5	22
WAIVED FROM SWAT	16	7	4	3	1	1
POSSIBLY NOT SWAT	16	3	6	1	4	2
NO JURISDICTION	14	9	0	2	0	3
DUPLICATE SITE	6	1	0	3	0	2
TOTAL	750	150	150	150	150	150

TABLE II

LEAKAGE CATEGORIES

TOTAL SITES APPROVED, EXEMPTED, OR WAIVED	NUMBER LEAKING AT HAZARDOUS WASTE CONCENTRATIONS	NUMBER LEAKING ABOVE "REGULATORY LEVELS"	NUMBER LEAKING BELOW "REGULATORY LEVELS"	NUMBER NOT KNOWN TO BE LEAKING	NUMBER LEAKAGE STATUS UNKNOWN	TOTAL NUMBER OF LEAKING SITES
544	33 (6%)	276 (51%)	83 (15%)	76 (14%)	76 (14%)	392 (72%) to 470 (86%)

TABLE III

SITES IDENTIFIED WITH WASTE CONSTITUENTS ABOVE HAZARDOUS WASTE LEVELS OUTSIDE THE WASTE MANAGEMENT UNIT

REG-ION	RANK	WASTE DIS-CHARGER SYSTEM NO.	SOLID WASTE ID NO.	WASTE MANAGEMENT UNIT NAME	FACILITY NAME	AGENCY NAME	REPORT STATUS	MEDIA TYPE SURFACE	GROUND	VADOSE
1	2	1A880520NSL-01		DEL NORTE COUNTY-PESTICIDE STORAGE	DEL NORTE PESTICIDE STORAGE AR	DEL NORTE, COUNTY OF	WAIVED	U	Y	U
2	1	2 071059002-02	07-AI-0001	U.S. STEEL CORP.-PITTSBURG SITE LA	WDR-USS-POSCO	USS-POSCO	APPROVED	N	N	Y
2	1	2 482011003-01	48-AA-0008	US NAVY MARE ISLAND SANITARY LANDFILL	WDR-NAVAL SHIPYARD/CLASS I LAN	MARE ISLAND NAVAL SHIPYARD	APPROVED	U	U	Y
2	2	2 019080001-01	01-AA-0004	NAS WEST BEACH SANITARY LANDFILL	WEST BEACH SANITARY LANDFILL	NAVAL FACILITIES ENGINEERING C	APPROVED	Y	Y	*
2	3	2 071007002-01		CHEVRON CHEMICAL COMPANY-OLD SITES	WDR-ORTHO DIV- RICHMOND PLANT	CHEVRON CHEMICAL COMPANY	APPROVED	N	Y	*
2	3	2 215008002-01		HAMILTON FIELD--LANDFILL 26	HAMILTON FIELD	US AIR FORCE/HAMILTON .5008	APPROVED	U	Y	U
3	1	3 270301004-01	27-AA-0015	FORT ORD LANDFILL	SANITARY LANDFILL	U.S. ARMY, FORT ORD	WAIVED	U	Y	U
3	3	3 420305001-01	42-AA-0017	LOMPOC CITY LANDFILL	SOLID WASTE DISPOSAL SITE	LOMPOC CITY	WAIVED	*	Y	*
4	1	4B190332001-01	19-AM-0001	OPERATING INDUSTRIES LANDFILL	OPERATING INDUSTRIES, INC.	OPERATING INDUSTRIES, INC.	WAIVED	U	Y	U
5F	1	5D162008001-01	16-AA-0002	KETTLEMAN HILLS LANDFILL	KETTLEMAN HILLS FACILITY	WASTE MANAGEMENT, INC	APPROVED	N	Y	U
5F	1	5D540300010-01	54-AA-0007	TULARE COUNTY-WOODLAKE LANDFILL	WOODLAKE SWDS	TULARE, COUNTY OF	APPROVED	N	Y	*
5F	2	5D100300001-01		MCKINLEY AVE. YARD	T.H. AGRICULTURE AND NUTRITION	NORTH AMERICAN PHILIPS	WAIVED	U	Y	U
5F	2	5D160302001-01	16-AA-0011	KINGS COUNTY-CORCORAN LANDFILL	CORCORAN SWDS	KINGS COUNTY WASTE MGMT AUTH.	APPROVED	N	Y	*
5F	3	5D100319001-01	10-AA-0013	ORANGE AVENUE DISPOSAL COMPANY	ORANGE AVENUE LANDFILL	ORANGE AVENUE DISP CO, INC	APPROVED	U	Y	U
5F	3	5D540300003-01	54-AA-0002	TULARE COUNTY-EXETER DISPOSAL SITE	EXETER SWDS	TULARE, COUNTY OF	APPROVED	U	Y	U
5F	4	5C240115001-01		ATWATER CITY	BERT CRANE ROAD LANDFILL	ATWATER, CITY OF	APPROVED	U	Y	Y
5F	5	5D100325N01-01		FOWLER CITY	FOWLER CITY LANDFILL (OLD)	FOWLER, CITY OF	APPROVED	U	U	Y
5R	2	5A042005001-01		KOPPERS COMPANY-OROVILLE SITE	KOPPERS WOOD PRESERVING ISW	KOPPERS INDUSTRIES INC	WAIVED	U	Y	U
5R	4	5A040302N01-01		CHICO CITY BURN DUMP	HUMBOLT ROAD LANDFILL	CHICO CITY OF	APPROVED	Y	N	U
5S	1	5B090300001-01	09-AA-0003	UNION MINE LANDFILL	UNION MINE LANDFILL	EL DORADO CO. ENV. MGMT DEPT.	APPROVED	Y	N	*
5S	1	5A340700003-01	34-AA-0008	US AIR FORCE-MCCLELLAN AFB LANDFILL	CLASS III SITE 8 (CLOSURE)	US AIR FORCE-MCCLELLAN AFB	WAIVED	N	Y	Y
5S	2	5A340700001-01		US AIR FORCE-MATHER FIELD LANDFILL	MATHER AFB, ENVIRONMENTAL MGMT	US AIR FORCE - MATHER AFB	APPROVED	N	N	Y
5S	3	5B342000N01-01		SACRAMENTO ARMY DEPOT	SACRAMENTO ARMY DEPOT	U.S. ARMY	APPROVED	N	Y	Y
5S	3	5B390308001-01	39-AA-0001	STOCKTON CITY LANDFILL-AUSTIN ROAD	AUSTIN ROAD CLASS II-2 SITE	STOCKTON, CITY OF	APPROVED	N	Y	Y
5S	3	5 390002NUR-01	39-AA-0006	US NAVY COMMUNICATIONS LANDFILL	U.S.N COMMUNICATION STA. LANDF	U.S.NAVY COMUNICATIONS	WAIVED	Y	Y	Y
5S	3	5 390003NUR-01		US ARMY-SHARPE ARMY DEPOT	US ARMY-SHARPE ARMY DEPOT	US ARMY	WAIVED	U	Y	Y
5S	5	5 390006NUR-01		SITE 300 (OTHER 39 WMUS)	LAWRENCE LIVERMORE LAB	LAWRENCE LIVERMORE LABS	APPROVED	*	Y	Y
6V	1	6B142000041-01	14-AA-0008	US TUNGSTEN OWENS LAKE LANDFILL	OWENS LAKE LANDFILL	UMETCO MINERALS CORPORATION	WAIVED	N	Y	*
8	1	8 300002NUR-01		MCCOLL SITE	MCCOLL SLUDGE DISPOSAL SITE	TOXIC SUBSTANCES CONTROL DIVIS	WAIVED	*	N	Y
8	1	8 300302001-01	30-AB-0017	COYOTE CANYON LANDFILL	LANDFILL,COYOTE CANYON-CLOSING	ORANGE COUNTY EMA/IWMD	WAIVED	*	Y	*
8	1	8 330325001-01		STRINGFELLOW QUARRY ACID PITS	STATE OF CALIFORNIA-STRINGFELL	TOXIC PROGRAM MANAGEMENT SECTI	WAIVED	N	Y	Y
8	2	8 330002NUR-01		US AIR FORCE-MARCH AFB LANDFILL	US AIR FORCE-MARCH AFB LANDFIL	DEPARTMENT OF THE AIR FORCE	WAIVED	*	Y	Y
8	3	8 360004NUR-01		BLACKLAND-PROPERTIES SITE	BLACKLAND PROPERTIES		APPROVED	*	N	Y
							SITES IN EACH MEDIA:	4	25	15

TOTAL SITES: 33

* The requirement for sampling this medium was waived, or (in the case of vadose zone) a soil sampling was analyzed.

NOTE: Based on a computer scan identifying threshold exceedances, some sites on Tables III, IV, and V may be identified as leaking even though the submitted SWAT report states that an upgradient source is the cause of the exceedance.

TABLE

SITES IDENTIFIED WITH WASTE CONSTITUENTS ABOVE "REGULATORY LEVELS" OUTSIDE OF THE WASTE MANAGEMENT UN

REG-ION	RANK	WASTE DIS-CHARGER SYSTEM NO.	SOLID WASTE ID NO.	WASTE MANAGEMENT UNIT NAME	FACILITY NAME	AGENCY NAME	REPORT STATUS	MEDIA TYPE SURFACE	GROUND	VADOSE
1	1	1A770020DN -01	08-AA-0006	CRESCENT CITY LANDFILL	CRESCENT CITY SWDS	DEL NORTE SOLID WASTE AUTHORIT	APPROVED	N	Y	*
1	1	1B791330HUM-01	12-AA-0005	EUREKA LANDFILL	CITY GARBAGE COMPANY-SWDS	CITY GARBAGE COMPANY	APPROVED	N	Y	*
1	1	1B750430MEN-01	23-AA-0019	UKIAH CITY LANDFILL	UKIAH, CITY OF-SWDS	UKIAH, CITY OF	APPROVED	N	Y	*
1	1	1B781250MEN-01	23-AA-0003	MENDOCINO COUNTY-CASPAR LANDFILL	MENDOCINO CO.-CASPAR SWDS	MENDOCINO CO SOLID WASTE DIV.	APPROVED	N	Y	*
1	1	1A741410SIS-01	47-AA-0027	TULELAKE-SHEEPY RIDGE LANDFILL	TULELAKE-SHEEPY RIDGE SWDS	COUNTY OF SISKIYOU	APPROVED	N	Y	*
1	2	1B750500MEN-01	23-AA-0008	MENDOCINO COUNTY-LAYTONVILLE LANDFILL	MENDOCINO CO.-LAYTONVILLE SWDS	MENDOCINO CO SOLID WASTE DIV.	APPROVED	N	Y	*
1	2	1B761300MEN-01	23-AA-0013	YORK RANCH WOODWASTE DISPOSAL SITE #3	LP-YORK RANCH WWDS #3	LOUISIANA-PACIFIC CORPORATION	APPROVED	N	Y	*
1	3	1B830510MEN-01	23-AA-0012	COVELO WOODWASTE DISPOSAL SITE NO. 3	LP-COVELO WWDS 2 AND 3	LOUISIANA PACIFIC CORPORATION	APPROVED	N	Y	*
1	4	1B751750MEN-01		WILLITS WOODWASTE DISPOSAL SITE NO. 3	LP-WILLITS WWDS #3	LOUISIANA PACIFIC CORPORATION	EXEMPTED	U	Y	U
1	5	1B900020NSO-01		SONOMA COUNTY-ROBLAR LANDFILL	SO CO ROBLAR SWDS	SONOMA COUNTY ROBLAR SWDS	APPROVED	Y	Y	*
1	5	1B900110NSO-01		SONOMA COUNTY-AIRPORT LANDFILL	SCPW AIRPORT ROAD BURN DUMP	SONOMA COOUNTY DEPT PUBLIC WKS	APPROVED	N	Y	*
2	1	2 071035002-01	07-AA-0001	WEST CONTRA COSTA LANDFILL	WDR-WEST CONTRA COSTA LANDFILL	W CONTRA COSTA SANTRY LANDFILL	APPROVED	N	Y	*
2	1	2 071042002-02		SHELL OIL CO.-MARTINEZ SLUDGE PONDS	WDR-SHELL LAND DISPOSAL	SHELL OIL	APPROVED	N	Y	U
2	1	2 438014001-01	43-AN-0004	SINGLETON ROAD LANDFILL	SAN JOSE CITY PARKS SERVICES-S	CITY OF SAN JOSE	APPROVED	N	Y	N
2	1	2 438068001-01	43-AA-0001	GUADALUPE RUBBISH DISPOSAL	WDR-GUADALUPE MINES LANDFILL	GUADALUPE RUBBISH DISPOSAL	APPROVED	N	Y	*
2	1	2 438070001-01	43-AM-0001	PALO ALTO CITY LANDFILL	WDR-SOLID WASTE DISPOSAL SITE	PALO ALTO, CITY OF	APPROVED	*	Y	*
2	1	2 438071001-01	43-AQ-0001	SUNNYVALE CITY LANDFILL	WDR-SUNNYVALE SOLID WASTE DISP	SUNNYVALE, CITY OF	APPROVED	Y	Y	*
2	2	2 019029002-01	01-AA-0006	DAVIS STREET LANDFILL	WDR-OYSTER BAY REGIONAL PARK	EAST BAY REGIONAL PARK DISTR '	APPROVED	*	Y	*
2	2	2 019086001-01	01-AA-0010	EASTERN ALAMEDA COUNTY LANDFILL	WDR-VASCO RD SANITARY LANDFILL	BFI WASTE SYSTEMS	APPROVED	*	Y	*
2	2	2 218049N01-01		WESTERN GRAVEL LANDFILL	-TIMBER COVE MOBILE HOME CO	TIMBER COVE/WESTERN GRAVEL LF	APPROVED	N	Y	N
2	2	2 438026001-01	43-AO-0001	SANTA CLARA ALL PURPOSE LANDFILL	WDR-ALL PURPOSE LANDFILL	SANTA CLARA, CITY OF	APPROVED	N	Y	U
2	2	2 438026N01-01		SANTA CLARA COUNTY-EASTSIDE LANDFILL	EASTSIDE LANDFILL	SANTA CLARA, CNTY OF, PLANNING	APPROVED	N	Y	U
2	2	2 438042001-01	43-AN-0004	MARSHLAND LANDFILL	WDR-MARSHLAND LANDFILL	LESLIE SALT CO	APPROVED	N	Y	N
2	2	2 438050001-01	43-AN-0007	ZANKER ROAD DISPOSAL & RECYCLING	WDR-ZANKER RD DISP & RECYCLING	ZANKER ROAD RESOURCE MGMT	APPROVED	*	Y	*
2	2	2 438262N01-01		SAN JOSE CITY-STORY ROAD LANDFILL	SAN JOSE CITY-STORY ROAD LANDF	CITY OF SAN JOSE	APPROVED	U	Y	U
2	3	2 070001NUR-01		UNION OIL LANDFARM-OLD SITE	UNION OIL LANDFARM-OLD SITE	UNION OIL COMPANY	APPROVED	U	Y	Y
2	3	2 019098001-01	01-AA-0001	TURK ISLAND SANITARY LANDFILL	WDR-CLASS III LANDFILL	TURK ISLAND COMPANY	APPROVED	N	Y	*
2	3	2 019106001-01	01-AA-0020	PLEASANTON WASTE DISPOSAL SITE	WDR-PLEASANTON WASTE DISPOSAL	PLEASANTON GARBAGE SERVICE,INC	APPROVED	N	Y	N
2	3	2 071048002-01		TOSCO-OLD SITES	WDR-TOSCO LAND DISPOSAL	TOSCO CORPORATION	APPROVED	Y	Y	*
2	3	2 215049001-01	21-AA-0003	SAN QUENTIN DISPOSAL SITE	WDR-SAN QUENTIN SOLID WASTE DI	CAL-POX INC.	APPROVED	N	Y	U
2	3	2 386026001-01		US NAVY-HUNTER'S POINT	US NAVY-HUNTER'S POINT	US NAVY	APPROVED	U	Y	U
2	3	2 417053001-01	41-AA-0002	OX MOUNTAIN LANDFILL	WDR-OX MOUNTAIN LANDFILL	BROWNING-FERRIS INDUSTRIES	APPROVED	*	Y	*
2	3	2 438332N01-01		ROBERT ROAD LANDFILL	-ROBERTS ROAD LANDFILL	SAN JOSE, CITY OF	APPROVED	N	Y	U
2	4	2 019029001-01	01-AA-0008	OAKLAND SCAVENGER-DURHAM ROAD LANDFILL	WDR-TRI-CITIES LANDFILL	WASTE MANAGEMENT OF ALAMEDA CO	APPROVED	U	Y	U
2	4	2 071006002-01	07-AA-0025	C & H SUGAR DISPOSAL SITE	C & H SUGAR LANDFILL 3 MI	FORNIA & HAWAIIAN SUGAR C0830	APPROVED	Y	Y	*
2	4	2 215065001-01	21-AA-0001	REDWOOD SANITARY LANDFILL	WDR-REDWOOD LANDFILL	REDWOOD LANDFILL, INC.	APPROVED	N	Y	*
2	4	2 000070358-01		SAN MATEO LANDFILL	EAST THIRD AVENUE LANDFILL	CITY OF SAN MATEO	APPROVED	N	Y	*
2	4	2 000070470-01		LANDFILLS 1 & 2, NORTH OPERABLE UNIT	US AIR FORCE-TRAVIS AFB LANDFI	60TH MILITARY AIRLIFT COMMAND	APPROVED	U	Y	U
2	4	2 494018001-01	49-AA-0005	SONOMA COUNTY LANDFILL	WDR-SONOMA CO CLASS III WASTE	SONOMA, CNTY OF, PUBLIC WORKS	APPROVED	N	Y	N
2	5	2 00009029E-01		OAKLAND SCAVANGER-WEST WINTON	OAKLAND SCAVANGER-WEST WINTON	OAKLAND SCVANGER	APPROVED	N	Y	N
2	5	2 071045003-01		CINDER FILL AREA	WDR-STAUFFER CHEM CO-PONDS-MTZ	RHOME-POULEXC BASIC CHEMICALS	APPROVED	N	Y	*
2	5	2 215099001-01	21-AA-0002	WEST MARIN SANITARY LANDFILL	WDR-WEST MARIN LANDFILL	WEST MARIN LANDFILL	APPROVED	U	Y	U
2	5	2 417104001-01	41-AA-0007	COLMA JUNIPERO SERRA	WDR-JUNIPERO, SERRA LANDFILL	BOCCI/SCHNEIDER	APPROVED	U	Y	U
2	5	2 000020350-01	48-AA-0001	SOLANO GARBAGE CO. SANITARY LANDFILL	SOLANO GARBAGE CO. SANITARY LA	SOLANO GARBAGE CO.	APPROVED	N	Y	U
2	7	2 019122001-01	01-AA-0012	ALAMEDA CITY LANDFILL	WDR-ALAMEDA CITY LANDFILL	ALAMEDA, CITY OF	APPROVED	N	Y	*
3	1	3 270303001-01	27-AA-0010	MARINA LANDFILL -- MODULE 1	MARINA DISPOSAL SITE	MONTEREY REGIONAL WST MGMT DST	APPROVED	N	Y	Y
3	1	3 350300001-01	35-AA-0001	JOHN SMITH LANDFILL	JOHN SMITH SOLID WASTE SITE	SAN BENITO COUNTY	APPROVED	*	Y	Y
3	1	3 420300001-01	42-AA-0004	CASMALIA RESOURCES DISPOSAL SITE	CLASS I DISPOSAL SITE	CASMALIA RESOURCES	APPROVED	Y	Y	N
3	1	3 440301001-01	44-AA-0001	SANTA CRUZ CITY LANDFILL	SANTA CRUZ DISPOSAL SITE	SANTA CRUZ CITY DPW	APPROVED	N	Y	N
3	2	3 270301005-01	27-AA-0013	US ARMY-HUNTER/LIGGETT LANDFIL	SANITARY LANDFILL	U.S. ARMY, FORT HUNTER LIGGETT	APPROVED	N	Y	N
3	2	3 270300004-01	27-AA-0003	LEWIS ROAD LANDFILL	LEWIS ROAD DISPOSAL SITE	MONTEREY COUNTY DPW	APPROVED	N	Y	N
3	2	3 270304001-01	27-AA-0007	CRAZY HORSE LANDFILL	CRAZY HORSE DISPOSAL SITE	SALINAS CITY DPW	APPROVED	Y	Y	Y
3	2	3 420304001-01	42-AA-0016	SANTA MARIA LANDFILL	SOLID WASTE DISPOSAL SITE	SANTA MARIA CITY	APPROVED	N	Y	*
3	2	3 420301002-02	42-AA-0011	FOXEN CANYON LANDFILL (2)	FOXEN CANYON LANDFILL	SANTA BARBARA COUNTY DPW	APPROVED	U	Y	U
3	2	3 420000N13-01		SANTA BARBARA TRANSFER STATION	TRANSFER STATION	SANTA BARBARA COUNTY DPW	APPROVED	U	Y	*
3	3	3 400307001-01	40-AA-0007	LOS OSOS LANDFILL	LOS OSOS LANDFILL CLOSURE	SAN LUIS OBISPO COUNTY	APPROVED	Y	Y	U
3	3	3 420306001-01	42-AA-0012	US AIR FORCE-VANDENBERG AFB LANDFILL	VANDENBERG AIR FORCE BASE SWDS	U.S. AIR FORCE, VANDENBERG	APPROVED	N	Y	*
3	3	3 430307001-01	43-AA-0004	PACHECO PASS LF--PARCEL 1	PACHECO PASS CLASS III LANDFIL	SOUTH VALLEY REFUSE DISPOSAL	APPROVED	*	Y	Y
3	3	3 440302001-01	44-AA-0002	WATSONVILLE CITY LANDFILL	DISPOSAL SITE	WATSONVILLE CITY	APPROVED	U	Y	U
3	3	3 440300001-01	44-AA-0003	BEN LOMOND LANDFILL	BEN LOMOND CLASS III	SANTA CRUZ COUNTY DPW	APPROVED	N	Y	N

* The requirement for sampling this medium was waived, or (in the case of vadose zone) a soil sampling was analyzed.
NOTE: Based on a computer scan identifying threshold exceedances, some sites on Tables III, IV, and V may be identified as leaking even though the submitted SWAT report states that an upgradient source is the cause of the exceedance.

TABLE IV

SITES IDENTIFIED WITH WASTE CONSTITUENTS ABOVE "REGULATORY LEVELS" OUTSIDE OF THE WASTE MANAGEMENT UNIT

REG-ION	RANK	WASTE DIS-CHARGER SYSTEM NO.	SOLID WASTE ID NO.	WASTE MANAGEMENT UNIT NAME	FACILITY NAME	AGENCY NAME	REPORT STATUS	MEDIA TYPE		
								SURFACE	GROUND	VADOSE
3	4	3 270300008-01	27-AA-0006	JOLON ROAD LANDFILL -- MODULE 1	JOLON ROAD SOLID WASTE SITE	MONTEREY COUNTY DPW	APPROVED	Y	Y	U
3	4	3 400301002-01	40-AA-0002	US ARMY-CAMP ROBERTS LANDFILL	CAMP ROBERTS SOLID WASTE SITE	CA NATIONAL GUARD	APPROVED	N	Y	Y
3	4	3 400310001-01	40-AA-0004	COLD CANYON LANDFILL	COLD CANYON LANDFILL INC.	SAN LUIS GARBAGE COMPANY	APPROVED	N	Y	N
3	5	3 420301003-01	42-AA-0015	SANTA BARBARA COUNTY-TAJIGUAS LANDFILL	TAJIGUAS SOLID WASTE SITE	SANTA BARBARA COUNTY DPW	APPROVED	Y	Y	N
4	1	4B190305001-01	19-AA-0013	AZUSA LAND RECLAMATION COMPANY	AZUSA LANDFILL	AZUSA LAND RECLAMATION CO.,INC	APPROVED	*	Y	N
4	1	4B190308006-01	19-AF-0001	BKK LANDFILL-WEST COVINA	CLASS III LANDFILL	BKK CORPORATION	APPROVED	N	Y	*
4	1	4B190321003-01	19-AR-1170	SHELDON ARLETA LANDFILL	SHELDON-ARLETA SITE, LA	LOS ANGELES CITY OF DPW	APPROVED	*	Y	A
4	1	4B190322002-01	19-AA-0056	L. A. COUNTY SD-CALABASAS LANDFILL	CALABASAS LANDFILL NO 5	LOS ANGELES COUNTY SAN DIST	APPROVED	N	Y	N
4	1	4B190322003-01	19-AR-0500	MISSION CANYON LANDFILL NO. 8	MISSION CYN SEPULV SITE	86 LOS ANGELES COUNTY SAN DIST	APPROVED	*	Y	*
4	1	4 190001NUR-01	19-AE-0001	PALOS VERDES LANDFILL	PALOS VERDES LANDFILL	COUNTY SAN DISTRICTS OF LA COU	APPROVED	U	Y	U
4	1	4B190322006-01	19-AA-0053	L.A. CO. SD-PUENTE HILLS LANDFILL	PUENTE HILLS LANDFILL NO 6	LOS ANGELES COUNTY SAN DIST	APPROVED	N	Y	N
4	1	4B190322007-01	19-AA-0012	L.A. CO. SD-SCHOLL CANYON LANDFILL	SCHOLL CYN LANDFILL NO 4	LOS ANGELES COUNTY SAN DIST	APPROVED	N	Y	Y
4	1	4B190322008-01	19-AA-0015	LOS ANGELES COUNTY SD-SPADRA LANDFILL	SPADRA LANDFILL NO 2	LOS ANGELES COUNTY SAN DIST	APPROVED	N	Y	Y
4	1	4A190359001-01	19-AA-0052	CHIQUITA CANYON LANDFILL	CHIQUITA CANYON LANDFILL	LAIDLAW WASTE SYSTEM CHIQUITA	APPROVED	N	Y	U
4	1	4B190330001-01	19-AI-0001	NORWALK DUMP COMPANY-NORWALK DUMP	SANTA FE SPRINGS DISP	NORWALK DUMP CO	APPROVED	U	Y	U
4	1	4B190318002-01	19-AR-0008	BRADLEY WEST LANDFILL	BRADLEY LANDFILL & RECYCLING	WASTE MANAGEMENT OF CALIF.	APPROVED	U	Y	U
4	1	4A560306005-01	56-AA-0004	SANTA CLARA COASTAL LANDFILL	SANTA CLARA DISP SITE, OXNARD	VENTURA REGIONAL SAN DISTRICT	APPROVED	N	Y	*
4	1	4A560306001-01	56-AA-0007	SIMI VALLEY LANDFILL	SIMI VALLEY LANDFILL	WASTE MANAGEMENT OF CALIFORNIA	APPROVED	N	Y	N
4	1	4A560300001-01	56-AA-0011	VENTURA RSD-BAILARD LANDFILL	BAILARD LANDFILL	VENTURA REGIONAL SAN DISTRICT	APPROVED	N	Y	*
4	2	4B190309001-01	19-AA-0040	STOUGH PARK, VERDUGO AREAS 1 & 2	STOUGH PK,VERDUGO	BURBANK, CITY OF	APPROVED	*	Y	*
4	2	4B190313001-01	19-AA-0011	COMPTON CITY LANDFILL-ALONDRA DUMP	COMPTON LANDFILL	COMPTON, CITY OF	APPROVED	U	Y	U
4	2	4B190321001-01	19-AA-0819	LOS ANGELES CITY-TOYON CANYON LANDFILL	TOYON CANYON LANDFILL	LOS ANGELES CITY OF DPW	APPROVED	*	Y	*
4	2	4B190345001-01	19-AH-0001	WHITTIER CITY-SAVAGE CANYON	SAVAGE CYN DISP SITE	WHITTIER, CITY OF	APPROVED	U	Y	U
4	2	4B190320005-01	19-AR-0006	PENROSE PIT NO. 8	TUJUNGA AVE/SITE 8-PENROSE PIT	86 LOS ANGELES BY-PRODUCTS CO	APPROVED	*	Y	N
4	2	4A190322001-01		WAYSIDE HONOR RANCHO LANDFILL	WAYSIDE HONOR RANCHO LANDFILL	WAYSIDE HONOR RANCHO LANFILL	APPROVED	U	Y	Y
4	2	4B190320004-01	19-AR-0006	PENROSE PIT LANDFILL NO. 7	PENROSE LANDFILL	LOS ANGELES BY-PRODUCTS CO	APPROVED	*	Y	N
4	2	4A190320003-01	19-AR-0007	HEWITT PIT NO. 6	VRC-HEWITT DISPOSAL SITE	LOS ANGELES BY-PRODUCTS CO.	APPROVED	*	Y	N
4	2	4 190008NUR-01	19-AR-0504	MISSION CANYON LANDFILL NO. 1-3	LA COUNTY SD-MISSION CANYONS N	LOS ANGELES COUNTY SANITATION	APPROVED	N	Y	N
4	2	4 190009NUR-01	19-AR-0507	MISSION CANYON LANDFILL NO. 4-7	LA COUNTY SD-MISSION CANYONS 4	LOS ANGELES COUNTY SANITATION	APPROVED	Y	Y	U
4	2	4B190331001-01	19-AA-0043	NU-WAY INDUSTRIES LANDFILL	IRWINDALE SITE	NU-WAY INDUSTRIES,INC.	APPROVED	U	Y	U
4	2	4 190002NUR-01	19-AR-0009	TUXFORD PIT LANDFILL	TUXFORD PIT LANDFILL	SAM ADLEN	APPROVED	N	Y	N
4	2	4 190005NUR-01		VALLEY RECLAMATION CO.-BENTZ LANDFILL	VALLEY RECLAMATION COMPANY-BEN	VALLEY RECLAMATION COMPANY	APPROVED	*	Y	*
4	2	4B190318001-01	19-AR-0004	BRADLEY AVENUE EAST	BRADLEY AVE,EAST	01 VALLEY RECLAMATION CO	APPROVED	N	Y	N
4	2	4 190007NUR-01		VALLEY RECLAMATION COMPANY-GREGG PIT	VALLEY RECLAMATION-GREGG PIT	VALLEY RECLAMATION COMPANY	APPROVED	U	Y	*
4	2	4B190321002-01		GAFFEY STREET LANDFILL, SAN PEDRO	GAFFEY ST SITE,SAN PEDRO	LOS ANGELES CITY OF DPW	APPROVED	U	Y	U
4	2	4A190322001-02		WAYSIDE HONOR RANCHO-CLASS III-INERT	WAYSIDE HONOR RANCHO LANDFILL	WAYSIDE HONOR RANCHO LANFILL	APPROVED	U	Y	U
4	2	4A560305001-01		SANTA PAULA CITY LANDFILL	SANTA PAULA CITY LANDFILL	CITY OF SANTA PAULA	APPROVED	N	N	Y
4	2	4A560301001-01		ELKINS RANCH BRINE SUMP NO. 1	ELKINS RANCH BRINE SUMP NO. 1	ELKINS RANCH COMPANY	APPROVED	Y	Y	Y
4	2	4A560301002-01		ELKINS RANCH BRINE SUMP NOS. 2,3,4,&5	ELKINS RANCH COMPANY	ELKINS RANCH COMPANY	APPROVED	Y	Y	Y
4	2	4A560301003-01		BRINE SUMP NOS. 6A,6B,6C,&7	ELKINS RANCH COMPANY	ELKINS RANCH COMPANY	APPROVED	Y	Y	Y
4	2	4A560301004-01		ELKINS RANCH MAIN BRINE SUMP	ELKINS RANCH COMPANY	ELKINS RANCH COMPANY	APPROVED	Y	Y	Y
4	3	4 190014NUR-01		HARDWICK DISPOSAL	HARDWICK DISPOSAL		APPROVED	N	Y	Y
4	3	4B190302001-01		ARMCO STEEL COMPANY-TORRANCE	TORRANCE DISP SITE, COPER 2994	ARMCO	APPROVED	Y	Y	N
4	3	4B190316001-01	19-AR-0005	CITY DISPOSAL COMPANY-HARBOR DUMP	AKA JAN PIT	MARTIN CONTAINER	APPROVED	*	Y	U
4	3	4 190019NUR-01		CITY DUMP & SALVAGE NO. 2	CITY DUMP & SALVAGE NO. 2	CITY DUMP & SALVAGE	APPROVED	U	Y	U
4	3	4 190021NUR-01		CITY DUMP & SALVAGE NO. 3-LONG BEACH	CITY DUMP & SALVAGE NO. 3-LONG	CITY DUMP & SALVAGE NO. 3-LONG	APPROVED	U	Y	U
4	3	4 190025NUR-01		CITY DUMP & SALVAGE NO. 1	CITY DUMP & SALVAGE NO. 1	CITY DUMP AND SALVAGE	APPROVED	N	Y	N
4	3	4 190026NUR-01		L.A. CITY-BISHOPS CANYON LANDFILL	LOS ANGELES CITY-BISHOPS CANYO	CITY OF LOS ANGELES	APPROVED	U	Y	U
4	3	4 190041NUR-01		KOBRA JR. INCORPORATED	KOBRA DUMP	KOBRA JR., INC.	APPROVED	U	Y	Y
4	3	4 190038NUR-01		L.A. BY-PRODUCTS-NEWBERRY	L.A. BY-PRODUCTS-NEWBERRY	L.A. BY-PRODUCTS COMPANY	APPROVED	N	Y	N
4	3	4 190032NUR-01		PORT DISPOSAL COMPANY-MACCO PIT	PORT DISPOSAL COMPANY-MACCO PI	PORT DISPOSAL COMPANY	APPROVED	N	Y	U
4	3	4 190036NUR-01		PORT DISPOSAL COMPANY-BANNING PIT	PORT DISPOSAL COMPANY-BANNING	PORT DISPOSAL COMPANY	APPROVED	N	Y	U
4	3	4 190037NUR-01		L.A. BY PRODUCTS-SANTA FE SPRINGS SITE	L.A. BY PRODUCTS-SANTA FE SPRI	L.A. BY-PRODUCTS COMPANY	APPROVED	U	Y	U
4	3	4 190039NUR-01		GARDENA	190TH & VERMONT	SOUTHERN CALIFORNIA DISPOSAL C	APPROVED	U	Y	U
4	3	4 190012NUR-01		BERADA CORP.-GARDENA VALLEY NO. 6	BERADA CORPORATION-GARDENA VAL	BERADA CORPORATION	APPROVED	Y	Y	N
4	3	4 190022NUR-01		CALIFORNIA BY-PRODUCTS-CARSON	CALIFORNIA BY-PRODUCTS-CARSON	CALIFORNIA BY-PRODUCTS	APPROVED	U	Y	U
4	4	4 190079NUR-01		COGEN	COGEN		APPROVED	N	Y	N
4	4	4 190081NUR-01		KALICO DUMP NO. 3 (12827 E. IMPERIAL)	KALICO DUMP NO. 3		APPROVED	U	Y	Y
4	4	4B190321008-01	19-AR-1019	L.A. DWP-PENDLETON STREET LANDFILL	PENDLETON ST , SUN VALLEY	LOS ANGELES CITY OF DWP	APPROVED	U	Y	U
4	4	4 190058NUR-01		JOHNS-MANVILLE-CARSON	JOHNS-MANVILLE-CARSON	MANVILLE SALES CORPORATION	APPROVED	U	Y	U

* The requirement for sampling this medium was waived, or (in the case of vadose zone) a soil sampling was analyzed.
NOTE: Based on a computer scan identifying threshold exceedances, some sites on Tables III, IV, and V may be identified as leaking even though the submitted SWAT report states that an upgradient source is the cause of the exceedance.

TABLE IV

SITES IDENTIFIED WITH WASTE CONSTITUENTS ABOVE "REGULATORY LEVELS" OUTSIDE OF THE WASTE MANAGEMENT UNIT

REG-ION	RANK	WASTE DIS-CHARGER SYSTEM NO.	SOLID WASTE ID NO.	WASTE MANAGEMENT UNIT NAME	FACILITY NAME	AGENCY NAME	REPORT STATUS	MEDIA TYPE SURFACE	GROUND	VADOSE
4	4	4 190097NUR-01		NEVILLE CHEMICAL-KALICO DUMP NO. 1	KALICO DUMP NO. 1	NEVILLE CHEMICAL	APPROVED	U	Y	Y
4	4	4 560002NUR-01		VENTURA COUNTY-TIERRA REJADA SITE	TIERRA REJADA SITE	VENTURA REGIONAL SANITATION DI	APPROVED	U	Y	U
	15	4B000001NUR-01		ASCOT PARK RACEWAY LANDFILL	ASCOT PARK RACEWAY LANDFILL		APPROVED	N	Y	N
5F	1	5D100302001-01	10-AA-0025	CHESTNUT LANDFILL	CHESTNUT AVE LANDFILL	BROWNING-FERRIS INDUSTRIES	APPROVED	*	Y	N
5F	1	5D100306002-01	10-AA-0005	FRESNO CITY LANDFILL	CLASS III LANDFILL	FRESNO, CITY OF	APPROVED	*	Y	N
5F	1	5D100307003-01	10-AA-0008	MENDOTA-FIREBAUGH LANDFILL	MENDOTA SOLID WASTE SITE	FRESNO, COUNTY OF	APPROVED	N	Y	*
5F	1	5D100307007-01	10-AA-0011	SOUTHEAST REGIONAL LANDFILL	SE REGIONAL SOLID WASTE SITE	FRESNO, COUNTY OF	APPROVED	*	Y	*
5F	1	5D100307008-01		FRESNO COUNTY-BIG BLUE HILLS LANDFILL	BIG BLUE HILLS CLASS III SITE	FRESNO, COUNTY OF	APPROVED	*	Y	*
5F	1	5D152068001-01		BAKERSFIELD LANDFILL	BAKERSFIELD II - 1 SWDS	CHEMICAL WASTE MANAGEMENT, INC	APPROVED	N	Y	Y
5F	1	5D150303010-02	15-AA-0063	KERN COUNTY-MCFARLAND-DELANO LANDFILL	MCFARLAND-DELANO SAN LNDFL-OLD	KERN COUNTY WASTE MGMT DEPT.	APPROVED	*	Y	*
5F	1	5D160303N02-01	16-AA-0006	KINGS CO-HANFORD CITY LANDFILL (OLD)	INACTIVE HOUSTON AVE LANDFILL	KINGS COUNTY WASTE MGMT AUTH.	APPROVED	*	Y	*
5F	1	5D160700002-01	16-AA-0005	US NAVY-LEMOORE NAS LANDFILL	LEMOORE NAS SWDS	U. S. DEPT OF THE NAVY	APPROVED	X	Y	X
5F	1	5C200300001-01	20-AA-0002	MADERA COUNTY-FAIRMEAD LANDFILL	FAIRMEAD SWDS	MADERA COUNTY	APPROVED	*	Y	N
5F	1	5D540300001-01	54-AA-0010	TULARE COUNTY-BALANCE ROCK LANDFILL	BALANCE ROCK SWDS	TULARE, COUNTY OF	APPROVED	*	Y	N
5F	1	5D540300009-01	54-AA-0009	TULARE COUNTY-VISALIA LANDFILL	VISALIA SWDS	TULARE, COUNTY OF	APPROVED	*	Y	Y
5F	2	5D100315001-01	10-AA-0002	BFI-CHATEAU LANDFILL	CHATEAU FRESNO CLASS III SITE	BROWNING-FERRIS INDUSTRIES	APPROVED	*	Y	N
5F	2	5C100303001-01	10-AA-0004	CLOVIS CITY LANDFILL	SOLID WASTE DISPOSAL SITE	CLOVIS, CITY OF	APPROVED	N	Y	N
5F	2	5D152002003-01		WILLIAM BROTHERS-ELK HILLS NORTH SITE	ELK HILLS (NORTH)	BECHTEL PETROLEUM, INC.	APPROVED	N	N	Y
5F	2	5D150303006-01	15-AA-0055	GETTY OIL COMPANY-KERN RIVER OIL FIELD	KERN VALLEY SANITARY LANDFILL	KERN COUNTY WASTE MGMT DEPT.	APPROVED	U	Y	U
5F	2	5D150303014-03	15-AA-0057	KERN COUNTY-SHAFTER-WASCO LANDFILL	SHAFTER-WASCO SANITARY LANDFIL	KERN COUNTY WASTE MGMT DEPT.	APPROVED	*	Y	N
5F	3	5D100307001-01	10-AA-0006	FRESNO COUNTY-COALINGA LANDFILL	COALINGA SOLID WASTE SITE	FRESNO, COUNTY RESOURCES DIV.	APPROVED	U	Y	N
5F	3	5D150303021-01	15-AA-0056	KERN COUNTY-LEBEC LANDFILL	LEBEC SANITARY LANDFILL	KERN COUNTY WASTE MGMT DEPT.	APPROVED	N	Y	N
5F	3	5C220300001-01	22-AA-0001	MARIPOSA COUNTY LF	MARIPOSA CO LANDFILL FACILITY	MARIPOSA COUNTY DPW	APPROVED	N	Y	*
5F	3	5C240303001-01	24-AA-0002	MERCED COUNTY-BILLY WRIGHT LANDFILL	BILLIE WRIGHT CLASS III LANDFL	MERCED COUNTY DPW	APPROVED	N	Y	N
5F	3	5D543001N01-01		BIXBY RANCH	BIXBY RANCH DISPOSAL SITE	BIXBY RANCH COMPANY	APPROVED	U	Y	N
5F	4	5D100326N01-01	10-AA-0020	KEPCO PINEDALE LANDFILL	KEPCO-PINEDALE LANDFILL	PINEDALE LANDOWNERS	APPROVED	U	Y	Y
5F	4	5D160305001-01	16-AA-0004	AVENAL LANDFILL	SOLID WASTE DISPOSAL SITE	AVENAL, CITY OF	APPROVED	*	Y	N
5F	4	5C200300002-01		MADERA COUNTY-NORTH FORK LANDFILL	NORTH FORK SWDS	MADERA COUNTY	APPROVED	N	Y	N
5F	4	5D540300006-01	54-AA-0004	TEAPOT DOME DISPOSAL SITE	TEAPOT DOME SWDS	TULARE, COUNTY OF	APPROVED	U	Y	U
5F	4	5D540300011-01	54-AA-0008	TULARE COUNTY-WOODVILLE DISPOSAL SITE	WOODVILLE SWDS	TULARE, COUNTY OF	APPROVED	U	Y	U
5F	4	5D540300002-01		TULARE COUNTY-EARLIMART DISPOSAL SITE	EARLIMART SWDS	TULARE, COUNTY OF	APPROVED	N	Y	N
5F	5	5D540300012-01	54-AA-0011	OROSI DISPOSAL SITE	OROSI SWDS	TULARE, COUNTY OF	APPROVED	N	Y	N
5R	1	5A520301001-01	52-AA-0001	TEHAMA COUNTY-RED BLUFF LANDFILL	RED BLUFF CL III LANDFILL ISW	TEHAMA COUNTY PUBLIC WORKS DPT	APPROVED	*	Y	N
5R	2	5A320300003-01	32-AA-0008	PLUMAS COUNTY-GOPHER HILL LANDFILL	GOPHER HILL CLASS III LANDFILL	PLUMAS COUNTY OF	APPROVED	Y	Y	N
5R	2	5A450300003-01	45-AA-0014	SHASTA COUNTY-BUCKEYE LANDFILL	BUCKEYE LANDFILL	SHASTA COUNTY OF	APPROVED	N	Y	N
5R	3	5A320300001-01	32-AA-0007	PORTOLA CITY LANDFILL	PORTOLA CLASS III LANDFILL	PORTOLA CITY OF	APPROVED	*	Y	N
5R	4	5A180300007-01	18-AA-0003	LASSEN COUNTY BIEBER LANDFILL	BIEBER LANDFILL	LASSEN COUNTY OF	APPROVED	N	Y	N
5R	4	5A470300001-01	47-AA-0003	SISKIYOU COUNTY-BLACK BUTTE LANDFILL	BLACK BUTTE CL III LANDFIL ISW	SISKIYOU COUNTY OF	APPROVED	*	Y	N
5S	1	5B010000001-01	01-AA-0009	ALTAMONT PASS LANDFILL	ALTAMONT SANITARY LANDFILL	WASTE MANAGEMENT OF ALAMEDA CO	APPROVED	N	Y	N
5S	1	5B030300006-01	03-AA-0001	AMADOR COUNTY-BUENA VISTA LANDFILL	BUENA VISTA CLASS II LANDFILL	AMADOR CO., BUENA VISTA SWDS	APPROVED	*	Y	Y
5S	1	5B070301002-01	07-AA-0003	CONTRA COSTA WASTE SERVICE	GBF/PITTSBURG LANDFILL	CONTR COSTA WASTE SERVICE	APPROVED	N	Y	*
5S	1	5A170300001-02		LAKE COUNTY-EASTLAKE LANDFILL	EASTLAKE LANDFILL	COUNTY OF LAKE, PWD	APPROVED	N	Y	N
5S	1	5A170304001-02		GEOTHERMAL INCORPORATED-MIDDLETOWN	BUTTS CANYON RD. FACILITY	GEOTHERMAL INC.	APPROVED	Y	Y	Y
5S	1	5A310300001-01	31-AA-0310	AUBURN-PLACER DISPOSAL LANDFILL	CLASS II-2 SWDS	AUBURN-AUBURN PLACER DISPOSAL	APPROVED	N	Y	U
5S	1	5A342000003-01	34-AA-0006	AEROJET LIQUID ROCKET COMPANY	AEROJET (LANDFILL)	AEROJET GENERAL CORPORATION	APPROVED	N	Y	N
5S	1	5A340309001-01	34-AD-0004	SACRAMENTO CITY LANDFILL	28TH STREET LANDFILL	SACRAMENTO, CITY OF	APPROVED	N	Y	*
5S	1	5A340301N01-01	34-AA-0012	WHITE ROCK ROAD NORTH LANDFILL	WHITE ROCK ROAD LANDFILL-NORTH	CLC INVESTMENT CORPORATION	APPROVED	N	Y	N
5S	1	5B390306001-01	39-AA-0015	FORWARD INCORPORATED LANDFILL	CLASS III SOLID WASTE DISP.	FORWARD, INC.	APPROVED	N	Y	Y
5S	1	5A480307001-01		MONTEZUMA HILLS FACILITY	MONTEZUMA HILLS FACILITY	IT CORP CLASS II/I DISP SITE	APPROVED	N	Y	Y
5S	1	5C500300001-01	50-AA-0003	BONZI SANITARY LANDFILL	CLASS III LF / UNCLASSIFIED LF	BONZI SANITATION LANDFILL, INC	APPROVED	*	Y	*
5S	1	5C500301001-01	50-AA-0002	STANISLAUS COUNTY-GEER ROAD LANDFILL	GEER ROAD LF- CLOSURE/GW TRMT	STANISLAUS CO./CITY OF MODESTO	APPROVED	N	Y	N
5S	1	5A570306001-01	57-AA-0001	YOLO COUNTY-CENTRAL LANDFILL	SOLID WASTE DISP. FACILITY	YOLO CO. CENTRAL LANDFILL	APPROVED	N	Y	Y
5S	2	5B050302001-01	05-AA-0014	CALAVERAS COUNTY-RED HILL LANDFILL	RED HILL SWDS	CALAVERAS CO. DPW	APPROVED	U	U	Y
5S	2	5A060300001-01	06-AA-0001	COLUSA COUNTY-EVANS ROAD LANDFILL	EVAN`S ROAD LANDFILL	COLUSA COUNTY LANDFILL SITE 1	APPROVED	*	Y	N
5S	2	5B070303001-01	07-AA-0004	PITTSBURG DISPOSAL AND DEBRIS SERVICE	PITTSBURG DISPOSAL LANDFILL	PITTSBURG DISP.&DEBRIS SERV.	APPROVED	*	Y	Y
5S	2	5A170312001-01		IT CORPORATION-BENSON RIDGE FACILITY	BENSON RIDGE FACILITY	I.T. CORP., ET AL	APPROVED	N	Y	*
5S	2	5C240300N01-01	22-AA-0001	USAF LANDFILLS	USAF LANDFILLS	CASTLE AIR FORCE BASE	APPROVED	N	Y	Y
5S	2	5A290300001-01	29-AA-0001	MCCOURTNEY RD LANDFILL--1989/90 CELL	MCCOURTNEY RD REFUSE SITE	NEVADA COUNTY SANITATION DEPT.	APPROVED	N	Y	Y
5S	2	5A340300N01-01	34-AA-0012	WHITE ROCK ROAD SOUTH LANDFILL	WHITE ROCK ROAD LANDFILL-SOUTH	AMERICAN RIVER AGGREGATES	APPROVED	*	Y	N
5S	2	5B390311001-01		B390311001IVERMORE LAB SITE 300 PIT 6	SOLID WASTE DISPOSAL	UC LAWRENCE LIVERMORE LAB	APPROVED	N	Y	Y

* The requirement for sampling this medium was waived, or (in the case of vadose zone) a soil sampling was analyzed.
NOTE: Based on a computer scan identifying threshold exceedances, some sites on Tables III, IV, and V may be identified as leaking even though the submitted SWAT report states that an upgradient source is the cause of the exceedance.

TABLE IV

SITES IDENTIFIED WITH WASTE CONSTITUENTS ABOVE "REGULATORY LEVELS" OUTSIDE OF THE WASTE MANAGEMENT UNIT

REG-ION	RANK	WASTE DIS-CHARGER SYSTEM NO.	SOLID WASTE ID NO.	WASTE MANAGEMENT UNIT NAME	FACILITY NAME	AGENCY NAME	REPORT STATUS	MEDIA TYPE		
								SURFACE	GROUND	VADOSE
5S	2	5A580305001-01	58-AA-0001	US AIR FORCE-BEALE AFB LANDFILLS	CLASS 2 SWDS	BEALE AIR FORCE BASE	APPROVED	N	Y	Y
5S	3	5B050301001-01	05-AA-0021	SOUTH CAMANCHE SHORE ASSOCIATION	SOUTH CAMANCHE SHORE SWDS	SOUTH SHORE, INC.	APPROVED	U	Y	U
5S	3	5 310002NUR-01	31-AA-0110	ROSEVILLE CITY SANITARY LANDFILL	ROSEVILLE SANITARY LANDFILL (C	CITY OF ROSEVILLE DEPT PUBLIC	APPROVED	N	Y	N
5S	3	5A340308001-01	34-AD-0003	A340308001L & D LANDFILL COMPANY	L AND D LANDFILL COMPANY	L AND D LANDFILL	APPROVED	*	Y	*
5S	3	5A340311001-01	34-AA-0001	GRANT LINE ROAD LANDFILL (KIEFER ROAD)	KIEFER ROAD- CLASS III SWDS	SACRAMENTO COUNTY DPW	APPROVED	Y	Y	Y
5S	3	5A580302001-01	58-AA-0003	YUBA-SUTTER DISPOSAL INCORPORATED	SOLID WASTE DISPOSAL SITE	YUBA-SUTTER DISPOSAL,INC.	APPROVED	U	Y	N
5S	4	5A170300001-01		LAKE COUNTY-LAKEPORT LANDFILL	EASTLAKE LANDFILL	COUNTY OF LAKE, PWD	APPROVED	N	Y	N
5S	4	5A342014N01-01	34-AA-0023	GERBER ROAD LANDFILL	GERBER ROAD LANDFILL	SOZZI, JOYCE	APPROVED	*	Y	N
5S	4	5 390004NUR-01		MC DONALD ISLAND CLASS II-2 DISP SITE	PACIFIC GAS AND ELECTRICITY		APPROVED	N	Y	*
5S	4	5B392077N01-01	39-AA-0013	J & M MANUFACTURING LANDFILL	STOCKTON PLANT	J-M MANUFACTURING COMPANY, INC	APPROVED	Y	N	N
5S	4	5C550300002-01	55-AA-0002	JAMESTOWN SANITARY LANDFILL	JAMESTOWN SAN LF - CLASS III	TUOLUMNE CO. DEPT OF TRANS	APPROVED	Y	Y	N
5S	4	5A570002NUR-01		UC DAVIS LANDFILL (OLD)	UC DAVIS LANDFILL (OLD)	UNIVERSITY OF CALIFORNIA, DAVI	APPROVED	N	Y	N
5S	5	5A280301001-01	28-AA-0003	BERRYESSA GARBAGE SERVICE LANDFILL	CLASS III LANDFILL	BERRYESSA GARBAGE SERVICE INC.	APPROVED	Y	Y	N
5S	5	5 480001NUR-01		DIXON CITY	DIXON CITY/SEIVER'S RD LANDFIL	CITY OF DIXON	APPROVED	U	Y	U
6T	3	6A250008000-01	25-AA-0003	FORT BIDWELL SOLID WASTE DISPOSAL SITE	FORT BIDWELL S.W.D.S.	MODOC COUNTY	APPROVED	N	Y	Y
6T	4	6A257504401-01	25-AA-0011	CEDARVILLE (NEW) LANDFILL--WEST	CEDARVILLE SWDS	MODOC CO. & US BUR. OF L. MGMT	APPROVED	N	Y	Y
6V	1	6B360304003-01	36-AA-0048	APPLE VALLEY MUNICIPAL LANDFILL	APPLE VALLEY MUNICIPAL LANDFIL	SAN BERNARDINO COUNTY	APPROVED	*	Y	*
6V	1	6B360304041-01	36-AA-0042	HEAPS PEAK SWDS POST-CLOSURE LANDFILL	HEAPS PEAK SWDS POST CLOSURE	SAN BERNARDINO COUNTY	APPROVED	N	N	Y
6V	1	6B360304013-01	36-AA-0061	LENWOOD/HINKLEY LANDFILL	LENWOOD/HINKLEY-LANDFILL	SAN BERNARDINO COUNTY	APPROVED	*	Y	N
6V	1	6B360304025-01	36-AA-0045	VICTORVILLE CLASS III LANDFILL	VICTORVILLE CLASS III LANDFILL	SAN BERNARDINO COUNTY	APPROVED	U	Y	N
6V	2	6B150316002-01	15-AA-0151	AFRPL CLASS III LANDFILL	EAFB-PL CLASS III LANDFILL	EDWARDS AIR FORCE BASE	APPROVED	*	Y	U
6V	2	6B150316001-01	15-AA-0150	EDWARDS MAIN BASE CLASS III LANDFILL	MAIN BASE CLASS III LANDFILL	EDWARDS AIR FORCE BASE	APPROVED	N	Y	U
6V	2	6B360005NUR-01		PILOT PLANT ROAD LANDFILL (SITE 22)	NWC PILOT PLANT ROAD LANDFILL	US NAVY	APPROVED	*	Y	U
6V	3	6B190343001-01	19-AA-0050	WASTE MANAGEMENT LANCASTER LANDFILL	WASTE MGMT LANCASTER LANDFILL	WASTE MANAGEMENT INCORPORATED	APPROVED	*	Y	Y
6V	3	6B360331002-01		FORT IRWIN ROAD LAND TREATMENT FA.	FORT IRWIN ROAD LAND TREATMENT	ATCHISON TOPEKA & SANTA FE RRD	APPROVED	U	Y	Y
6V	4	6B150005NUR-01	15-AA-0102	CALMAT KILN BRICK/INERT SWDS	CALMAT KILN BRICK/INERT SWDS		APPROVED	*	Y	N
6V	4	6B150303017-01	15-AA-0062	TEHACHAPI CLASS III LANDFILL	TEHACHAPI CLASS III LANDFILL	KERN COUNTY DPW	APPROVED	U	Y	U
6V	4	6B150010NUR-01		LAURITSEN ROAD LANDFILL, SITE 34	NAWS, LAURITSEN RD LF(SITE 34)	TOM MCGILL	APPROVED	U	Y	U
7	1	7B330305021-01	33-AA-0017	RIVERSIDE COUNTY-BLYTHE LANDFILL	BLYTHE CLASS III WMF 91-005	RIVERSIDE CO.-WASTE MGT. DIV.	APPROVED	*	Y	N
7	2	7A330305081-01		MECCA I LANDFILL (OLD)	MECCA SWDS 67-021	RIVERSIDE CO.-WASTE MGT. DIV.	APPROVED	N	Y	U
7	2	7A360304121-01	36-AA-0057	SAN BERNARDINO COUNTY-LANDERS LANDFILL	LANDERS CLASS III WMF 91-028	SAN BERNARDINO CO.-SW MGT.	APPROVED	*	Y	N
7	2	7A360304231-01	36-AA-0060	TWENTYNINE PALMS LANDFILL	TWENTYNINE PALMS WMF 90-020	SAN BERNARDINO CO.-SW MGT.	APPROVED	*	Y	N
7	3	7A130301021-01	13-AA-0004	CALEXICO CLASS III WMF 88-07	CALEXICO CLASS III WMF 91-027	IMPERIAL, COUNTY OF	APPROVED	N	Y	*
7	3	7A330305061-01	33-AA-0012	COACHELLA VALLEY LANDFILL	COACHELLA CLASS III WMF 91-013	RIVERSIDE CO.-WASTE MGT. DIV.	APPROVED	*	Y	N
7	4	7A130301011-01	13-AA-0008	IMPERIAL COUNTY-BRAWLEY DISPOSAL SITE	BRAWLEY CLASS III WMF 91-031	IMPERIAL, COUNTY OF	APPROVED	U	Y	U
7	4	7A330305131-01	33-AA-0071	RIVERSIDE COUNTY-MECCA II LANDFILL	MECCA II CLS III WMF 91-006	RIVERSIDE CO.-WASTE MGT. DIV.	APPROVED	N	Y	N
7	4	7A360304141-01		LUCERNE VALLEY SWDS	LUCERNE VALLEY WMF 89-010	SAN BERNARDINO CO.-SW MGT.	APPROVED	U	Y	U
7	5	7A330008NUR-01		CATHEDRAL CITY LANDFILL #19	CATHEDRAL CITY #19 LANDFILL	CATHEDRAL CITY LD IMPROV. DIST	APPROVED	U	Y	U
8	1	8 300302005-01	30-AB-0018	SANTIAGO CANYON LANDFILL	LANDFILL,SANTIAGO CANYON	ORANGE COUNTY EMA/IWMD	APPROVED	Y	Y	Y
8	1	8 302610N01-01	30-AB-0029	US ARMED FORCES RESERVE CENTER	LANDFILL	CA ARMY NATIONAL GUARD	APPROVED	N	Y	*
8	1	8 330304002-01		TEQUESQUITE LANDFILL	LANDFILL,TEQUESQUITE-INACTIVE	RIVERSIDE,CITY OF	APPROVED	Y	Y	*
8	1	8 330305001-01	33-AA-0003	HIGHGROVE LANDFILL	LANDFILL,HIGHGROVE	RIVERSIDE COUNTY WASTE MGMT	APPROVED	N	Y	Y
8	1	8 330305003-01	33-AA-0004	CORONA LANDFILL	LANDFILL,CORONA-CLOSED	RIVERSIDE COUNTY WASTE MGMT	APPROVED	N	Y	Y
8	1	8 330305012-01	33-AA-0008	DOUBLE BUTTE LANDFILL	LANDFILL,DOUBLE BUTTE	RIVERSIDE COUNTY WASTE MGMT	APPROVED	*	Y	N
8	1	8 360303001-01	36-AA-0017	CALIFORNIA STREET LANDFILL	LANDFILL,CALIFORNIA STREET	REDLANDS,CITY OF	APPROVED	N	N	Y
8	1	8 360304009-01	36-AA-0055	FONTANA LANDFILL	LANDFILL,HIGHLAND AVE,FONTANA	SAN BERNARDINO COUNTY SWMD	APPROVED	*	Y	*
8	1	8 360304022-01	36-AA-0051	COLTON LANDFILL	LANDFILL,TROPICA RANCHO/COLTON	SAN BERNARDINO COUNTY SWMD	APPROVED	N	Y	*
8	1	8 360304024-01	36-AA-0053	VERDEMONT LANDFILL.	LANDFILL,VERDEMONT/CAJON-INACT	SAN BERNARDINO COUNTY SWMD	APPROVED	*	Y	N
8	1	8 360304039-01	36-AA-0054	MILLIKEN LANDFILL	LANDFILL,MILLIKEN	SAN BERNARDINO COUNTY SWMD	APPROVED	*	Y	*
8	1	8 360338001-01	36-AA-0005	UPLAND CITY LANDFILL	LANDFILL,UPLAND-CLOSED	UPLAND,CITY OF	APPROVED	*	Y	Y
8	2	8 300004NUR-01		STANTON	STANTON	ORANGE COUNTY	APPROVED	*	Y	*
8	2	8 300302002-01	30-AB-0035	OLINDA-ALPHA LANDFILL	LANDFILL,OLINDA NO 23	ORANGE COUNTY EMA/IWMD	APPROVED	*	Y	Y
8	2	8 330305002-01	33-AA-0010	IDYLLWILD LANDFILL	LANDFILL,IDYLLWILD-1NACTIVE	RIVERSIDE COUNTY WASTE MGMT	APPROVED	*	Y	*
8	2	8 330305005-01	33-AA-0005	ELSINORE LANDFILL	LANDFILL,ELSINORE-CLOSED	RIVERSIDE COUNTY WASTE MGMT	APPROVED	*	Y	*
8	2	8 330305019-01	33-AA-0009	MEAD VALLEY LANDFILL	LANDFILL,MEAD VALLEY	RIVERSIDE COUNTY WASTE MGMT	APPROVED	*	Y	*
8	2	8 362277001-01		WATERMAN LANDFILL	LANDFILL, WATERMAN	TRI-CITY CORPORATE CENTER	APPROVED	N	Y	N
8	2	8 360112002-01	36-AA-0250	RIALTO CITY LANDFILL	LANDFILL,RIALTO	RIALTO,CITY OF	APPROVED	N	Y	N
8	2	8 360304027-01	36-AA-0052	YUCAIPA LANDFILL	LANDFILL,YUCAIPA-INACTIVE	SAN BERNARDINO COUNTY SWMD	APPROVED	*	Y	*
8	2	8 360700005-01		US AIR FORCE-NORTON AFB LANDFILL	NORTON AFB SUBSURF.,PONDS,ETC.	U.S. AIR FORCE	APPROVED	N	Y	N
8	3	8 300007NUR-01		SAN JOAQUIN ROAD	DISPOSAL SITE NO. 13	ORANGE COUNTY	APPROVED	N	Y	N

* The requirement for sampling this medium was waived, or (in the case of vadose zone) a soil sampling was analyzed.
NOTE: Based on a computer scan identifying threshold exceedances, some sites on Tables III, IV, and V may be identified as leaking even though the submitted SWAT report states that an upgradient source is the cause of the exceedance.

TABLE

SITES IDENTIFIED WITH WASTE CONSTITUENTS ABOVE "REGULATORY LEVELS" OUTSIDE OF THE WASTE MANAGEMENT UNIT

REG-ION	RANK	WASTE DIS-CHARGER SYSTEM NO.	SOLID WASTE ID NO.	WASTE MANAGEMENT UNIT NAME	FACILITY NAME	AGENCY NAME	REPORT STATUS	MEDIA TYPE SURFACE	GROUND	VADOSE
8	3	8 300008NUR-01	30-AB-0167	GOTHARD STREET LANDFILL	GOTHARD STREET LANDFILL (CLOSE	ORANGE COUNTY	APPROVED	N	Y	*
8	3	8 300306002-01	30-AB-0027	ASCON LANDFILL-STEVERSON BROTHERS	LANDFILL,HUNT. BEACH,ASCON	HUNTINGTON BEACH,CITY OF	APPROVED	*	Y	*
8	3	8 300006NUR-01	30-AB-0356	GATEWAY LONGSDON LANDFILL	LONGSDON PIT/GARDEN GROVE SAN.	ORANGE COUNTY	APPROVED	N	Y	*
8	3	8 330305004-01	33-AA-0007	LAMB CANYON LANDFILL	LANDFILL,LAMB CANYON	RIVERSIDE COUNTY WASTE MGMT	APPROVED	*	Y	N
8	3	8 330305020-01	33-AA-0006	BADLANDS LANDFILL	LANDFILL,SAN TIMOTEO BADLANDS	RIVERSIDE COUNTY WASTE MGMT	APPROVED	*	Y	Y
8	3	8 362039002-01	36-AA-0065	LIVINGSTON-GRAHAM, REDLANDS	SEPTAGE DISPOSAL	PHARRIS, C. L. - SUNWEST MAT.	APPROVED	*	Y	*
8	4	8 300302003-01	30-AB-0016	OLINDA LANDFILL	LANDFILL,OLINDA NO 20	ORANGE COUNTY EMA/IWMD	APPROVED	*	Y	Y
8	4	8 300011NUR-01		SPARKS PIT	SPARKS PIT	ORANGE COUNTY	APPROVED	*	Y	*
8	4	8 330003NUR-01		RIVERSIDE CITY-PEDLEY SITE	RIVERSIDE CITY-PEDLEY SITE	COUNTY OF RIVERSIDE	APPROVED	N	Y	Y
8	4	8 330324001-01		LANDFILL,HEMET-INACTIVE	LANDFILL,HEMET-INACTIVE	RIVERSIDE COUNTY WASTE MGMT	APPROVED	*	Y	*
8	4	8 360305001-01	36-AA-0019	AGUA MANSA LANDFILL	LANDFILL,AGUA MANSA	YEAGER,E.L. CONSTRUCTION CO.	APPROVED	N	Y	*
8	5	8 300014NUR-01		LA HABRA NO. 11	LA HABRA NO. 11	ORANGE COUNTY	APPROVED	N	Y	*
8	5	8 300021NUR-01		LANE ROAD	ORANGE COUNTY-LANE ROAD	ORANGE COUNTY	APPROVED	U	Y	*
8	5	8 360304040-01		CRESTMORE BLOOMINGTON SITE	LANDFILL,CRESTMORE-CLOSED	SAN BERNARDINO COUNTY SWMD	APPROVED	*	Y	*
8	13	8 300058NUR-01	30-AB-0359	GARDEN GROVE SAN SERVICE-LONGSDON PIT	GARDEN GROVE-LONGSDON PIT D.S.	GARDEN GROVE SANITATION DIST.	APPROVED	N	Y	*
9	1	9 000000013-01	37-AA-0903	LAS PULGAS SANITARY LANDFILL	LAS PULGAS SANITARY LANDFILL	U.S. MARINE CORPS	APPROVED	*	Y	Y
9	1	9 000000213-01	37-AA-0009	OTAY VALLEY DISPOSAL SITE	OTAY CLASS 1 LANDFILL	SAN DIEGO,COUNTY OF,SLD WASTE	APPROVED	*	Y	N
9	1	9 000000214-01	37-AA-0010	OTAY ANNEX SANITARY LANDFILL	OTAY ANNEX SANITARY LANDFILL	SAN DIEGO,COUNTY OF,SLD WASTE	APPROVED	*	Y	*
9	1	9 000000215-01		OMAR RENDERING CLASS I DISPOSAL SITE	OMAR RENDERING LANDFILL	DARLING INT'L. INC.	APPROVED	*	Y	*
9	1	9 000000278-01	37-AA-0008	SAN MARCOS SANITARY LANDFILL	SAN MARCOS SANITARY LANDFILL	SAN DIEGO,COUNTY OF,SLD WASTE	APPROVED	N	Y	*
9	1	9 000035N90-01	37-SS-0904	SOUTH CHOLLAS LANDFILL	SOUTH CHOLLAS LANDFILL	SAN DIEGO,CITY OF,SLD WST DIV	APPROVED	N	Y	Y
9	1	9 370005NUR-01		GOLF COURSE GARBAGE DISPOSAL AREA	NAS NORTH ISLAND	NAVY	APPROVED	*	Y	*
9	2	9 000036N90-01		FORSTER CANYON LANDFILL	FORSTER CANYON LANDFILL STN 17	CAPISTRANO ASCOT DEVELOPMENT	APPROVED	U	Y	U
9	2	9 000000204-01	33-AA-0013	ANZA SANITARY LANDFILL	ANZA SANITARY LANDFILL	RIVERSIDE COUNTY WASTE MGMNT.	APPROVED	N	Y	N
9	2	9 000037N90-01	37-AK-0006	MAXSON STREET LANDFILL	MAXSON STREET LANDFILL	OCEANSIDE,CITY OF, PUBIC WORKS	APPROVED	U	Y	U
9	3	9 000000173-01	37-AA-0004	BONSALL LANDFILL	BONSALL LANDFILL	SAN DIEGO,COUNTY OF,SLD WASTE	APPROVED	U	Y	U
9	3	9 000000252-01	37-SS-0015	SYCAMORE CANYON LANDFILL	SYCAMORE CANYON SAN LANDFILL	SAN DIEGO,COUNTY OF,SLD WASTE	APPROVED	U	Y	U
9	3	9 000010N90-01		HILLSBOROUGH LANDFILL	HILLSBOROUGH SANITARY LANDFILL	HILLSBOROUGH MASTER ASSOC, INC	APPROVED	U	Y	U
9	3	9 000025N90-01		SAN MARCOS(OLD)- LINDA VISTA LANDFILL	SAN MARCOS (OLD) LIND VISTA LF	SAN DIEGO,COUNTY OF,SLD WASTE	APPROVED	U	Y	U
9	3	9 000000387-01		DUCK POND LANDFILL	DUCK POND LANDFILL	BLVD INV.,NAT.CITY,CDC,CO SD	APPROVED	U	Y	U
9	3	9 000000349-01	37-AA-0001	JAMACHA JUNCTION SANITARY LANDFILL	JAMACHA SANITARY LANDFILL	SAN DIEGO,COUNTY OF,SLD WASTE	APPROVED	U	Y	U
9	4	9 000000248-01	37-AA-0005	RAMONA LANDFILL	RAMONA SANITARY LANDFILL	SAN DIEGO,COUNTY OF,SLD WASTE	APPROVED	U	Y	U
9	4	9 000023N90-01	37-AA-0003	VIEJAS LANDFILL	VIEJAS LANDFILL	SAN DIEGO,COUNTY OF,SLD WASTE	APPROVED	U	Y	U
9	4	9 370027NUR-01		OLD MARINE RECRUIT DEPOT DISP AREA	NAVAL TRAINING CENTER	COMMAND, ENVIRONMENTAL DIVISIO	APPROVED	U	Y	U
9	4	9 000000348-01		POWAY LANDFILL	POWAY LANDFILL	SAN DIEGO,COUNTY OF,SLD WASTE	APPROVED	N	Y	N
9	5	9 000000362-01		PALOMAR AIRPORT LANDFILL	PALOMAR AIRPORT SAN LANDFILL	SAN DIEGO,COUNTY OF,SLD WASTE	APPROVED	N	Y	N

TOTAL SITES: 276 SITES IN EACH MEDIA: 24 270 50

* The requirement for sampling this medium was waived, or (in the case of vadose zone) a soil sampling was analyzed.

NOTE: Based on a computer scan identifying threshold exceedances, some sites on Tables III, IV, and V may be identified as leaking even though the submitted SWAT report states that an upgradient source is the cause of the exceedance.

TABLE V

SITES IDENTIFIED WITH WASTE CONSTITUENTS BELOW "REGULATORY LEVELS" AND ABOVE BACKGROUND LEVELS OUTSIDE OF THE WASTE MANAGEMENT UNIT

REG-ION	RANK	WASTE DIS-CHARGER SYSTEM NO.	SOLID WASTE ID NO.	WASTE MANAGEMENT UNIT NAME	FACILITY NAME	AGENCY NAME	REPORT STATUS	MEDIA TYPE		
								SURFACE	GROUND	VADOSE
1	1	1B730610HUM-01	12-AA-0017	LOUISIANA PACIFIC-SAMOA LANDFILL	LP-SAMOA SWDS	LOUISIANA PACIFIC CORPORATION	APPROVED	*	Y	*
1	1	1B791010HUM-01	12-AA-0022	HUMBOLDT COUNTY-TABLE BLUFF LANDFILL	HUMBOLDT CO.-TABLE BLUFF SWDS	HUMBOLDT COUNTY-DPW	APPROVED	N	Y	*
1	1	1B750180SON-01	49-AA-0004	SONOMA COUNTY-HEALDSBURG LANDFILL	SONOMA COUNTY-HEALDSBURG SWDS	SONOMA COUNTY DEPT. PUB. WORKS	APPROVED	*	N	Y
1	1	1A801930TRI-01	53-AA-0013	TRINITY COUNTY-WEAVERVILLE LANDFILL	TRINITY CO-WEAVERVILLE SWDS	TRINITY COUNTY-DPW	APPROVED	U	Y	*
1	2	1A770500DN -01	08-AA-0004	KLAMATH WOODWASTE DISPOSAL SITE	SIMPSON TIMBER CO-KLAMATH WWDS	SIMPSON TIMBER COMPANY	APPROVED	N	Y	*
1	2	1B751470HUM-01	12-AA-0029	KORBEL WOODWASTE DISPOSAL SITE	SIMPSON TIMBER CO.-KORBEL WWDS	SIMPSON TIMBER COMPANY	APPROVED	Y	N	*
1	2	1B751730MEN-01	23-AA-0021	WILLITS CITY LANDFILL	WILLITS SWDS	WILLITS, CITY OF	APPROVED	N	Y	*
1	2	1B770230MEN-01	23-AA-0018	MENDOCINO COUNTY-SOUTH COAST LANDFILL	MENDOCINO CO.-SOUTH COAST SWDS	MENDOCINO COUNTY SOLID WASTE	APPROVED	N	Y	*
1	2	1B810400MEN-01	23-AA-0005	FORT BRAGG WOODWASTE DISPOSAL SITE	GP-FORT BRAGG WWDS	GEORGIA-PACIFIC CORPORATION	APPROVED	N	Y	*
1	2	1A751500SIS-01	47-AA-0002	YREKA CITY LANDFILL	YREKA, CITY OF-SWDS	YREKA, CITY OF	APPROVED	N	Y	*
1	2	1B780640SON-01	49-AA-0002	SONOMA COUNTY-ANNAPOLIS LANDFILL	SONOMA COUNTY-ANNAPOLIS SWDS	SONOMA COUNTY DEPT. PUB. WORKS	APPROVED	N	Y	*
1	3	1B751120HUM-01	12-AA-0013	PACIFIC LUMBER COMPANY-SCOTIA WWDS	PACIFIC LUMBER COMPANY-WWDS	PACIFIC LUMBER COMPANY	APPROVED	Y	Y	U
1	3	1B770330MEN-01	23-AA-0011	CASPAR WOODWASTE DISPOSAL SITE	LP-CASPAR WWDS	LOUISIANA-PACIFIC CORPORATION	APPROVED	N	Y	*
1	3	1B770510MEN-01	23-AA-0007	HARWOOD PRODUCTS-BRANSCOMB WWDS	HARWOOD PROD.-BRANSCOMB WWDS	HARWOOD PRODUCTS	APPROVED	Y	Y	*
1	4	1A770100SIS-01	47-AA-0026	SISKIYOU COUNTY-HAPPY CAMP LANDFILL	HAPPY CAMP LANDFILL	SISKIYOU CO. DEPT PUBLIC WORKS	APPROVED	N	Y	U
1	5	1B85022RHUM-01	12-AA-0085	SIMPSON PAPER COMPANY LANDFILL	SIMPSON PAPER-FAIRHAVEN SWDS	SIMPSON PAPER COMPANY	APPROVED	*	Y	*
1	5	1B900150NSO-01		SONOMA CITY-SEBASTOPOL BURN DUMP	SEBASTOPOL BURN DUMP	SEBASTOPOL, CITY OF	APPROVED	Y	N	N
1	5	1B840640SON-01		MASONITE/ALAN FURBER-CLOVERDALE WWDS	LP-CLOVERDALE WWDS	LOUISIANA-PACIFIC CORPORATION	APPROVED	N	Y	*
1	6	1B910320NSO-01		SONOMA COUNTY-OCCIDENTAL LANDFILL	SONOMA COUNTY OCCIDENTAL LANDF	SONOMA COUNTY	APPROVED	N	Y	*
2	1	2 019109001-01		JONES-HAMILTON	NPD-CHEMICAL BLENDING FACILITY	JONES-HAMILTON CO.	APPROVED	N	Y	*
2	1	2 071023001-01		IT CORPORATION-VINE HILL FACILITY	WDR-IT CORP-VINE HILL FACILITY	IT CORPORATION	APPROVED	N	Y	*
2	1	2 071045002-01		STAUFFER CHEMICAL-MARTINEZ	WDR-STAUFFER CHEM CO-PONDS-MTZ	RHONE-POULENC BASIC CHEMICALS	APPROVED	N	Y	*
2	1	2 071067001-01	07-AA-0002	ACME FILL CORPORATION	WDR-ACME FILL LAND DISPOSAL	ACME FILL CORPORATION	APPROVED	N	Y	*
2	1	2 482017001-01		IT CORPORATION-PANOCHE	WDR-IT CORP-PANOCHE FACILITY	IT CORPORATION	APPROVED	Y	Y	*
2	2	2 000020310-01		SOUTHAMPTON	SOUTHAMPTON	SOUTHAMPTON COMPANY	APPROVED	Y	Y	U
2	3	2 430002NUR-01		G & M CONSTRUCTION-MARTIN SITE	G & M CONSTRUCTION-MARTIN SITE		APPROVED	N	Y	N
2	4	2 438194001-01		WEST VALLEY DISPOSAL	CAMPISI/WEST VALLEY DISPOSAL G	BRANDENBURG,STAEDLER & MOORE	APPROVED	N	Y	Y
2	5	2 438052001-01	43-AN-0001	OWENS CORNING CORP. LANDFILL.	WDR-OWENS CORNING LANDFILL	OWENS-CORNING FIBERGLASS CORP	APPROVED	U	Y	U
3	3	3 270000N02-01		LAGUNA SECA	LAGUNA SECA LANDFILL	BISHOP, MCINTOSH & MCINTOSH	APPROVED	U	Y	Y
4	2	4A560307001-01	56-AA-0009	GETTY OIL-SITE C	HALL/SCHOOL CANYON DISP SITES	TEXACO PRODUCING, INC.	APPROVED	Y	N	N
4	2	4A560306006-01		VENTURA COUNTY RSD-EL RIO LANDFILL	WAGON WHEEL DISP SITE	86 VENTURA REGIONAL SAN DISTRI	APPROVED	N	Y	*
4	4	4 190053NUR-01	19-AR-1017	LOS ANGELES DWP-ROSE HILLS LANDFILL	ROSE HILLS DISPOSAL SITE	L.A. CITY - DEPT. OF WATER & P	APPROVED	N	Y	Y
4	4	4B190321004-01	19-AR-1018	LOS ANGELES DWP-STONE CANYON RESERVOIR	STONE CYN RESERVOIR	LOS ANGELES CITY OF DWP	APPROVED	N	Y	N
5F	1	5D150313002-01	15-AA-0065	EASTSIDE SWDS	EASTSIDE II-1 SWDS	ENVIRONMENTAL PROTECTION CORP.	APPROVED	U	Y	U
5F	3	5D100307006-01	10-AA-0009	SAN JOAQUIN-TRANQUILITY LANDFILL	AMERICAN AVENUE LANDFILL	FRESNO, COUNTY OF	APPROVED	U	Y	Y
5F	3	5C240303002-01	24-AA-0001	MERCED COUNTY-SNELLING DUMP	HIGHWAY 59 LANDFILL	MERCED COUNTY DPW	APPROVED	N	Y	Y
5F	4	5D100322001-01		CALWA YARD	CALWA YARD SOLID WASTE SITE	ATCHESON, TOPEKA AND SANTA FE	EXEMPTED	U	U	Y
5F	5	5D152002N05-01		ELK HILLS 35R SWDS - CLOSED	ELK HILLS 35R SWDS - CLOSED	BECHTEL PETROLEUM, INC., NPR-1	APPROVED	U	U	Y
5F	7	5 150011NUR-01	15-AA-0002	GETTY OIL COMPANY-MCKITTRICK LANDFILL	MCKITTRICK LANDFILL	GETTY OIL CO.	EXEMPTED	N	U	Y
5R	1	5A040300001-01	04-AA-0002	BUTTE COUNTY-NEAL ROAD LANDFILL	NEAL ROAD CL III LANDFILL ISW	BUTTE COUNTY OF	APPROVED	N	Y	Y
5R	1	5A450301002-01	45-AA-0019	REDDING CITY LANDFILL	REDDING CLASS III LANDFILL ISW	REDDING CITY OF	APPROVED	N	Y	*
5R	2	5A040306001-01	04-AA-0009	LOUISIANA PACIFIC-OROVILLE SITE	OROVILLE CLASS III LANDFL ISW	LOUISIANA PACIFIC CORPORATION	APPROVED	Y	Y	N
5R	2	5A450302001-01	45-AA-0022	ANDERSON LANDFILL I	SIMPSON CLASS III LANDFILL	SIMPSON PAPER COMPANY	APPROVED	N	N	Y
5R	3	5A180300001-01	18-AA-0010	LASSEN COUNTY-WESTWOOD LANDFILL	WESTWOOD CLASS III LANDFILL	LASSEN COUNTY OF	APPROVED	N	Y	N
5R	3	5A450301N01-01	45-AA-001!	SHASTA COUNTY-ENTERPRISE LANDFILL	ENTERPRISE LANDFILL (CLOSED)	SHASTA COUNTY OF	APPROVED	Y	N	N
5R	3	5A520300001-01	52-AA-000?	RED BLUFF DISPOSAL SITE	RED BLUFF CL III LANDFILL ISW	LOUISIANA PACIFIC CORPORATION	APPROVED	N	Y	N
5R	4	5A320300002-01	32-AA-0009	PLUMAS COUNTY-CHESTER DISPOSAL SITE	CHESTER CLASS III LANDFILL	PLUMAS COUNTY OF	APPROVED	N	Y	N
5R	5	5A450300005-01	45-AA-0043	PHASE I LANDFILL	WEST CENTRAL CL III LANDFL ISW	SHASTA COUNTY OF	APPROVED	N	Y	N
5S	2	5B032000003-01	03-AA-000?	GEORGIA PACIFIC CORP.-MARTELL SITE	GEORGIA PACIFIC/WOOD WASTE DS	GEORGIA PACIFIC GEORGIA	APPROVED	*	Y	*
5S	2	5B390300N01-01	39-AA-001!	COVE CONTRACTORS	COVE CONTRACTORS, INC	COVE CONTRACTORS, INC	APPROVED	N	U	Y
5S	2	5A480306001-01	48-AA-000!	AQUA CLEAR FARMS	FLANNERY ROAD CLASS II-1 SWDS	AQUA CLEAR FARMS, INC.	APPROVED	N	Y	*
5S	2	5A480300001-01	48-AA-000?	B & J DROP BOX DISPOSAL SITE-VACAVILLE	B & J DROP BOX DISP SITE	B & J DROP BOX *	APPROVED	N	Y	N
5S	2	5A570309001-01	57-AA-000!	UNIVERSITY OF CAL LANDFILL-DAVIS	CLASS III LANDFILL	UNIV. OF CALIF., DAVIS	APPROVED	N	Y	N
5S	3	5A310303001-01	31-AA-0140	PLACER COUNTY-LOOMIS LANDFILL	LOOMIS SOLID WASTE DISP SITE	PLACER COUNTY DPW	APPROVED	Y	Y	Y
5S	3	5A480304001-01	48-AA-000!	RIO VISTA SANITATION SERVICE	RIO VISTA LANDFILL	RIO VISTA, CITY OF	APPROVED	*	Y	Y
5S	4	5A340310001-01	34-AC-000?	FOLSOM CITY LANDFILL	FOLSOM CORP YARD LANDFILL	FOLSOM, CITY OF	APPROVED	N	Y	N
5S	4	5C500302001-01	50-AA-000?	STANISLAUS COUNTY-FINK ROAD LANDFILL	FINK ROAD LANDFILL	STANISLAUS COUNTY DPW	APPROVED	N	Y	N
5S	4	5C550300001-01	55-AA-000?	TUOLUMNE COUNTY-GROVELAND	GROVELAND DISP SITE	TUOLUMNE COUNTY DPW	APPROVED	U	Y	U
5S	5	5A340302001-01	34-AA-000?	DIXON PIT	DIXON PIT SWDS	WEST COAST BUILDING WRECKING	APPROVED	Y	Y	*
5S	5	5A570300001-01	57-AA-001!	DAVIS CITY LANDFILL (OLD)	UC DAVIS LANDFILL (OLD)		APPROVED	N	Y	N

* The requirement for sampling this medium was waived, or (in the case of vadose zone) a soil sampling was analyzed.
NOTE: Based on a computer scan identifying threshold exceedances, some sites on Tables III, IV, and V may be identified as leaking even though the submitted SWAT report states that an upgradient source is the cause of the exceedance.

TABLE V

SITES IDENTIFIED WITH WASTE CONSTITUENTS BELOW "REGULATORY LEVELS" AND ABOVE BACKGROUND LEVELS OUTSIDE OF THE WASTE MANAGEMENT UNIT

REG-ION	RANK	WASTE DIS-CHARGER SYSTEM NO.	SOLID WASTE ID NO.	WASTE MANAGEMENT UNIT NAME	FACILITY NAME	AGENCY NAME	REPORT STATUS	MEDIA TYPE		
								SURFACE	GROUND	VADOSE
6T	1	6A180013000-01	18-AA-0009	BASS HILL LANDFILL	LASSEN CO SANITARY LANDFILL	LASSEN CO DEPT OF PUBLIC WORKS	APPROVED	*	Y	N
6T	1	6A260012000-01	26-AA-0001	WALKER LANDFILL	WALKER SANITARY LANDFILL	MONO CO. DEPT. OF PUBLIC WORKS	APPROVED	*	Y	Y
6V	3	6B150001NUR-01	15-AA-0034	NWC SNORT ROAD LANDFILL (SITE 12)	SNORT DISPOSAL SITE	US NAVY	APPROVED	U	Y	U
6V	4	6B150009NUR-01		ARMITAGE NAVAL AIR FIELD DISP,SITE 27	NAWS, NAVAL AIR FIELD(SITE 27)	TOM MCGILL	APPROVED	*	Y	*
6V	5	6B150303003-01	15-AA-0045	BORON CLASS III LANDFILL	BORON CLASS III LANDFILL	KERN COUNTY DPW	APPROVED	*	Y	*
6V	5	6B190009NUR-01		NATIONAL CEMENT CKD WASTE PILE	CEMENT WASTE PILE	PORTLAND CEMENT	APPROVED	U	Y	U
6V	5	6B360047NUR-01		ASH DISPOSAL WASTE PILE,SEARLES LAKE	ASH DISPOSAL WASTES PILE	KERR-MCGEE CHEMICAL CORP.	APPROVED	U	Y	U
7	1	7A130315002-01		MORTON SALT LANDFILL	LAIDLAW LC-1 SWMU 89-041	LAIDLAW ENV SERV (IMP VAL)INC.	APPROVED	*	N	Y
8	1	8 330305011-01	33-AA-0001	WEST RIVERSIDE LANDFILL	LANDFILL,W. RIVERSIDE-INACTIVE	RIVERSIDE COUNTY WASTE MGMT	APPROVED	N	Y	*
8	2	8 300003NUR-01		CANAL STREET	CANAL STREET	ORANGE COUNTY	APPROVED	N	Y	Y
8	2	8 360001NUR-01		REDLANDS CITY-CHURCH STREET LANDFILL	CHURCH STREET LANDFILL	CITY OF REDLANDS	APPROVED	N	Y	*
8	3	8 360304021-01	36-AA-0087	SAN TIMOTEO CANYON LANDFILL	LANDFILL,SAN TIMOTEO CANYON	SAN BERNARDINO COUNTY SWMD	APPROVED	N	Y	N
8	4	8 300010NUR-01		LA VETA, ORANGE	LA VETA AVE DISPOSAL SITE	ORANGE COUNTY	APPROVED	N	N	Y
8	4	8 330305021-01	33-AA-0128	BELLTOWN NO. 1 LANDFILL (OLD)	LANDFILL,BELLTOWN-INACTIVE	RIVERSIDE COUNTY WASTE MGMT	APPROVED	*	Y	*
8	4	8 360006NUR-01		PLUNGE CREEK LANDFILL LEVEES	PLUNGE CREEK LANDFILL LEVEES	SAN BERNADINO CO SWMD	APPROVED	*	Y	*
8	4	8 362023005-01	36-AA-0018	KAISER STEEL-FONTANA LANDFILL	LANDFILL,KAISER STEEL,FONTANA	KAISER RESOURCES, INC.	APPROVED	*	Y	Y
8	5	8 360304037-01		COOLEY RANCH LANDFILL	LANDFILL,COOLEY RANCH-INACTIVE	SAN BERNARDINO COUNTY SWMD	APPROVED	N	Y	*
8	7	8 300020NUR-01		YORBA STREET	YORBA/CHAPMAN STREET	ORANGE COUNTY	APPROVED	N	N	Y
9	1	9 000000011-01	37-AA-0901	BOX CANYON SANITARY LANDFILL	BOX CANYON SANITARY LANDFILL	U.S. MARINE CORPS	APPROVED	U	Y	U
9	1	9 000000314-01	37-AA-0020	WEST MIRAMAR SWDS FACILITY	WEST MIRAMAR SANITARY LANDFILL	SAN DIEGO,CITY OF,ENVNMTL SERV	APPROVED	U	Y	U
9	2	9 000000342-01	37-AK-0001	MISSION AVENUE LANDFILL	MISSION AVENUE SAN. LANDFILL	COMMUNITY SERVICES DEPT	APPROVED	*	Y	*
9	2	9 000000378-01	37-SS-0092	MISSION BAY LANDFILL	MISSION BAY LANDFILL	SAN DIEGO,CITY OF,ENVNMTL SERV	APPROVED	U	Y	*
9	2	9 000026N90-01	37-AA-0016	ENCINITAS LANDFILL	ENCINITAS LANDFILL	SAN DIEGO,COUNTY OF,SLD WASTE	APPROVED	*	Y	N
						SITES IN EACH MEDIA:		11	70	20

TOTAL SITES: 83

* The requirement for sampling this medium was waived, or (in the case of vadose zone) a soil sampling was analyzed.

NOTE: Based on a computer scan identifying threshold exceedances, some sites on Tables III, IV, and V may be identified as leaking even though the submitted SWAT report states that an upgradient source is the cause of the exceedance.

TABLE VI

SITES IDENTIFIED WITH NO WASTE CONSTITUENTS OUTSIDE OF THE WASTE MANAGEMENT UNIT

REG-ION	RANK	WASTE DIS-CHARGER SYSTEM NO.	SOLID WASTE ID NO.	WASTE MANAGEMENT UNIT NAME	FACILITY NAME	AGENCY NAME	REPORT STATUS	WASTE TYPE	MEDIA S	MEDIA G	MEDIA V
1	1	1A801680SIS-01	47-AA-0019	WEED LANDFILL	WEED, CITY OF-SWDS	WEED, CITY OF	APPROVED	HAZARDOUS WASTE	*	N	N
								ABOVE "REG LEVEL"	*	N	N
								BELOW "REG LEVEL"	*	N	N
1	1	1B801490SON-01	49-AA-0001	SONOMA COUNTY-CENTRAL LANDFILL	SONOMA COUNTY-CENTRAL SWDS.	SONOMA COUNTY DEPT. PUB. WORKS	APPROVED	HAZARDOUS WASTE	N	N	*
								ABOVE "REG LEVEL"	N	N	*
								BELOW "REG LEVEL"	N	N	*
1	3	1B790480HUM-01	12-AA-0031	MAKI, ALLEN WWDS	MAKI, ALLAN-WWDS	MAKI, ALLAN	APPROVED	HAZARDOUS WASTE	N	N	*
								ABOVE "REG LEVEL"	N	N	*
								BELOW "REG LEVEL"	N	N	*
1	4	1A790760SIS-01	47-AA-0031	LAVA BEDS LANDFILL	USDI,NPS-LAVA BEDS NAT. MON.	USDI,NPS-LAVA BEDS NAT. MON.	EXEMPTED	HAZARDOUS WASTE	N	N	U
								ABOVE "REG LEVEL"	N	N	U
								BELOW "REG LEVEL"	N	N	U
1	4	1A830580SIS-01	47-AA-0025	ROSEBURG LUMBER WOODWASTE DISP SITE	ROSEBURG LUMBER COMPANY-SWDS	ROSEBURG FOREST PRODUCTS	APPROVED	HAZARDOUS WASTE	N	N	U
								ABOVE "REG LEVEL"	N	N	U
								BELOW "REG LEVEL"	N	N	U
1	4	1A890360NSI-01		WEED CITY BURN DUMP (OLD)	OLD WEED DUMP	INTERNATIONAL PAPER COMPANY	APPROVED	HAZARDOUS WASTE	N	N	U
								ABOVE "REG LEVEL"	N	N	U
								BELOW "REG LEVEL"	N	N	U
1	5	1A821030SIS-01	47-AA-0045	SIS.CO.-HOTELLING GULCH SWDS	SIS.CO.-HOTELLING GULCH SWDS	SISKIYOU COUNTY-DPW	EXEMPTED	HAZARDOUS WASTE	*	*	*
								ABOVE "REG LEVEL"	*	*	*
								BELOW "REG LEVEL"	*	*	*
1	5	1A821210SIS-01	47-AA-0044	SISKIYOU COUNTY-ROGERS CREEK LANDFILL	SIS.CO.DPW-ROGERS CKEEK SWDS	SISKIYOU COUNTY-DPW	EXEMPTED	HAZARDOUS WASTE	*	N	*
								ABOVE "REG LEVEL"	*	N	*
								BELOW "REG LEVEL"	*	N	*
1	5	1A890390NSI-01	47-AA-0029	SISKIYOU COUNTY-KELLY GULCH LANDFILL	KELLY GULCH SWDS	SISKIYOU DEPT OF PUBLIC WORKS	EXEMPTED	HAZARDOUS WASTE	N	*	*
								ABOVE "REG LEVEL"	N	*	*
								BELOW "REG LEVEL"	N	*	*
1	5	1B791920SON-01	49-AA-0010	LUNDEBERG MARYLAND SCHOOL LANDFILL	LUNDEBURG MARYLAND SCHOOL-SWDS	LUNDEBURG MARYLAND SCHOOL	EXEMPTED	HAZARDOUS WASTE	N	N	N
								ABOVE "REG LEVEL"	N	N	N
								BELOW "REG LEVEL"	N	N	N
2	1	2 438047001-01	43-AN-0003	BFI-NEWBY ISLAND LANDFILL	WDR-NEWBY ISLAND LANDFILL	BROWNING FERRIS INDUSTRIES	APPROVED	HAZARDOUS WASTE	N	N	*
								ABOVE "REG LEVEL"	N	N	*
								BELOW "REG LEVEL"	N	N	*
	15	2 210001NUR-01		BELLAM BOULEVARD CITY LANDFILL	BELLAM BLVD CITY LANDFILL	CITY OF SAN RAFAEL	APPROVED	HAZARDOUS WASTE	N	N	*
								ABOVE "REG LEVEL"	N	N	*
								BELOW "REG LEVEL"	N	N	*
3	2	3 440300002-01	44-AA-0004	BUENA VISTA LANDFILL -- MODULE 1	BUENA VISTA DISPOSAL SITE	SANTA CRUZ COUNTY DPW	APPROVED	HAZARDOUS WASTE	N	N	N
								ABOVE "REG LEVEL"	N	N	N
								BELOW "REG LEVEL"	N	N	N
3	2	3 560307002-02		OZENA MODIFIED LANDFILL	OZENA MODIFIED SANITARY LANDFL	VENTURA SANITATION DISTRICT	APPROVED	HAZARDOUS WASTE	N	N	*
								ABOVE "REG LEVEL"	N	N	*
								BELOW "REG LEVEL"	N	N	*
3	5	3 270000N37-01		US ARMY-MONTEREY PRESIDIO	MONTEREY PRESIDIO LANDFILL	U.S. ARMY, FORT ORD	APPROVED	HAZARDOUS WASTE	N	N	N
								ABOVE "REG LEVEL"	N	N	N
								BELOW "REG LEVEL"	N	N	N

* The requirement for sampling this medium was waived, or (in the case of vadose zone) a soil sampling was analyzed.

SITES IDENTIFIED WITH NO WASTE CONSTITUENTS OUTSIDE OF THE WASTE MANAGEMENT UNIT

REG-ION	RANK	WASTE DIS-CHARGER SYSTEM NO.	SOLID WASTE ID NO.	WASTE MANAGEMENT UNIT NAME	FACILITY NAME	AGENCY NAME	REPORT STATUS	WASTE TYPE	MEDIA S	MEDIA G	MEDIA V
4	2	4B190362001-01	19-AA-0007	AMERON LANDFILL	SOUTH GATE	86 AMERON PIPE PRODUCTS GROUP	APPROVED	HAZARDOUS WASTE	N	N	N
								ABOVE "REG LEVEL"	N	N	N
								BELOW "REG LEVEL"	N	N	N
4	2	4B190360001-01	19-AA-0006	GLENDALE CITY-BRAND PARK DISPOSAL SITE	BRAND PARK DISPOSAL SITE	GLENDALE, CITY OF	APPROVED	HAZARDOUS WASTE	N	N	N
								ABOVE "REG LEVEL"	N	N	N
								BELOW "REG LEVEL"	N	N	N
4	2	4B190318003-02	19-AR-1160	SUN VALLEY NO. 3	CALMAT SITE, SUN VALLEY	CALMAT PROPERTIES CO.	APPROVED	HAZARDOUS WASTE	N	N	N
								ABOVE "REG LEVEL"	N	N	N
								BELOW "REG LEVEL"	N	N	N
4	3	4B190318003-01	19-AR-1160	CONROCK-CALMAT LANDFILL	CALMAT SITE, SUN VALLEY	CALMAT PROPERTIES CO.	APPROVED	HAZARDOUS WASTE	N	N	N
								ABOVE "REG LEVEL"	N	N	N
								BELOW "REG LEVEL"	N	N	N
4	3	4B190361001-01		WESTLAKE VILLAGE DUMP	WESTLAKE VILLAGE DUMP	86 PRUDENTIAL INSUR.CO. OF AME	APPROVED	HAZARDOUS WASTE	N	N	N
								ABOVE "REG LEVEL"	N	N	N
								BELOW "REG LEVEL"	N	N	N
4	4	4 190166NUR-01		BEVERLY HILLS CITY LANDFILL	BEVERLY HILLS CITY LANDFILL	CITY OF BEVERLY HILLS	EXEMPTED	HAZARDOUS WASTE	N	N	N
								ABOVE "REG LEVEL"	N	N	N
								BELOW "REG LEVEL"	N	N	N
4	4	4 190148NUR-01		EL MONTE CITY DUMP	EL MONTE CITY DUMP	CITY OF EL MONTE	EXEMPTED	HAZARDOUS WASTE	N	N	N
								ABOVE "REG LEVEL"	N	N	N
								BELOW "REG LEVEL"	N	N	N
4	4	4B190340001-01		GENTRY BROTHERS-IRWINDALE	IRWINDALE	86 GENTRY BROTHERS INC.	EXEMPTED	HAZARDOUS WASTE	N	N	N
								ABOVE "REG LEVEL"	N	N	N
								BELOW "REG LEVEL"	N	N	N
4	4	4B190327001-01	19-AA-0019	MONTEBELLO LAND AND WATER CO. LANDFILL	MONTEBELLO	MONTEBELLO LAND & WATER CO	EXEMPTED	HAZARDOUS WASTE	N	N	N
								ABOVE "REG LEVEL"	N	N	N
								BELOW "REG LEVEL"	N	N	N
5F	1	5D152041001-01		MCKITTRICK SITE	MCKITTRICK CLASS II SITE	SANIFILL, INC.	APPROVED	HAZARDOUS WASTE	N	N	*
								ABOVE "REG LEVEL"	N	N	*
								BELOW "REG LEVEL"	N	N	*
5F	2	5C202014001-01	20-AA-0004	TELEDYNE TUNGSTON-STRAWBERRY MINE	STRAWBERRY MINE	GARTUNG INDUSTRIES, INC.	APPROVED	HAZARDOUS WASTE	N	*	N
								ABOVE "REG LEVEL"	N	*	N
								BELOW "REG LEVEL"	N	*	N
5R	1	5A450306001-01	45-AA-0022	PACKWAY MATERIALS LANDFILL	CLASS III LANDFILL	INTERMOUNTAIN LANDFILL INC	APPROVED	HAZARDOUS WASTE	*	N	N
								ABOVE "REG LEVEL"	*	N	N
								BELOW "REG LEVEL"	*	N	N
5R	3	5A450303001-01	45-AA-0020	ANDERSON LANDFILL II	ANDERSON CL III LANDFILL ISW	ANDERSON SOLID WASTE INC	APPROVED	HAZARDOUS WASTE	N	N	N
								ABOVE "REG LEVEL"	N	N	N
								BELOW "REG LEVEL"	N	N	N
5S	2	5A310309001-01	31-AA-0210	WESTERN REGIONAL SANITARY LANDFILL	WESTER REG SANITARY LANDFILLS	WESTERN REG SAN LANDFILL AUTH	APPROVED	HAZARDOUS WASTE	N	N	N
								ABOVE "REG LEVEL"	N	N	N
								BELOW "REG LEVEL"	N	N	N
5S	2	5B390307001-01	39-AA-0005	TRACY CITY LANDFILL-CORRAL HOLLOW ROAD	CORRAL HOLLOW CLASS III LF	SAN JOAQUIN CO. DPW	APPROVED	HAZARDOUS WASTE	N	N	N
								ABOVE "REG LEVEL"	N	N	N
								BELOW "REG LEVEL"	N	N	N

* The requirement for sampling this medium was waived, or (in the case of vadose zone) a soil sampling was analyzed.

TABLE VI

SITES IDENTIFIED WITH NO WASTE CONSTITUENTS OUTSIDE OF THE WASTE MANAGEMENT UNIT

REG-ION	RANK	WASTE DIS-CHARGER SYSTEM NO.	SOLID WASTE ID NO.	WASTE MANAGEMENT UNIT NAME	FACILITY NAME	AGENCY NAME	REPORT STATUS	WASTE TYPE	MEDIA S	G	V
5S	3	5 070001NUR-01		ANTIOCH CITY LANDFILL(OLD)	ANTIOCH CITY LANDFILL(OLD)	CITY OF ANTIOCH	APPROVED	HAZARDOUS WASTE	*	N	N
								ABOVE "REG LEVEL"	*	N	N
								BELOW "REG LEVEL"	*	N	N
5S	3	5A570300N01-01		WEST SACRAMENTO LANDFILL	WEST SACRAMENTO LANDFILL	ELEANOR BERTAGNA ET. AL.	APPROVED	HAZARDOUS WASTE	N	N	*
								ABOVE "REG LEVEL"	N	N	*
								BELOW "REG LEVEL"	N	N	*
5S	4	5A310301N01-01	31-AA-0540	FOREST HILL LANDFILL	FORESTHILL LANDFILL	PLACER COUNTY DPW	APPROVED	HAZARDOUS WASTE	*	N	N
								ABOVE "REG LEVEL"	*	N	N
								BELOW "REG LEVEL"	*	N	N
5S	4	5B390300001-01	39-AA-0004	FOOTHILL SANITARY LANDFILL INCORP.	CLASS III SANITARY LANDFILL	FOOTHILL SANITARY LANDFILL	APPROVED	HAZARDOUS WASTE	N	N	N
								ABOVE "REG LEVEL"	N	N	N
								BELOW "REG LEVEL"	N	N	N
5S	5	5 070002NUR-01		JERSEY ISLAND ASH DISPOSAL SITE	JERSEY ISLAND ASH DISPOSAL SIT	FIBREBOARD CORPORATION	APPROVED	HAZARDOUS WASTE	N	N	N
								ABOVE "REG LEVEL"	N	N	N
								BELOW "REG LEVEL"	N	N	N
5S	5	5A110301001-01	11-AA-0001	GLENN COUNTY LANDFILL SITE- ARTOIS	GLENN CO. SAN. LF CLASS III	GLENN COUNTY DPW	APPROVED	HAZARDOUS WASTE	N	N	N
								ABOVE "REG LEVEL"	N	N	N
								BELOW "REG LEVEL"	N	N	N
6T	1	6A310041000-01	31-AA-0560	EASTERN REGIONAL LANDFILL	EASTERN REGIONAL LANDFILL	PLACER COUNTY	APPROVED	HAZARDOUS WASTE	*	N	N
								ABOVE "REG LEVEL"	*	N	N
								BELOW "REG LEVEL"	*	N	N
6V	1	6B140300002-01	14-AA-0005	BISHOP (SUNLAND) CLASS III LANDFILL	BISHOP(SUNLAND)CLASS III LF	INYO COUNTY DPW ADMIN SERVICES	APPROVED	HAZARDOUS WASTE	N	N	U
								ABOVE "REG LEVEL"	N	N	U
								BELOW "REG LEVEL"	N	N	U
6V	1	6B152004001-01	15-AA-0278	GANGUE/REFUSE/OVERBURDEN WASTE PILES	BORON MINE FACILITY	US BORAX & CHEM CORP	APPROVED	HAZARDOUS WASTE	N	N	N
								ABOVE "REG LEVEL"	N	N	N
								BELOW "REG LEVEL"	N	N	N
6V	1	6B260300011-01	26-AA-0003	PUMICE VALLEY CLASS III LANDFILL	PUMICE VALLEY CLASS III LF	MONO COUNTY DPW	APPROVED	HAZARDOUS WASTE	*	N	*
								ABOVE "REG LEVEL"	*	N	*
								BELOW "REG LEVEL"	*	N	*
6V	1	6B260300002-01	26-AA-0004	MONO COUNTY-BENTON CROSSING LANDFILL	BENTON CROSSING LANDFILL	MONO COUNTY DPW	APPROVED	HAZARDOUS WASTE	N	N	N
								ABOVE "REG LEVEL"	N	N	N
								BELOW "REG LEVEL"	N	N	N
6V	1	6B360304005-01	36-AA-0046	BARSTOW CLASS III LANDFILL	BARSTOW CLASS III LANDFILL	SAN BERNARDINO COUNTY	APPROVED	HAZARDOUS WASTE	*	*	N
								ABOVE "REG LEVEL"	*	*	N
								BELOW "REG LEVEL"	*	*	N
6V	1	6B360304020-01	36-AA-0044	PHELAN CLASS III LANDFILL	PHELAN CLASS III LANDFILL	SAN BERNARDINO COUNTY	APPROVED	HAZARDOUS WASTE	*	*	N
								ABOVE "REG LEVEL"	*	*	N
								BELOW "REG LEVEL"	*	*	N
6V	2	6B190335001-01	19-AA-0009	ANTELOPE VALLEY CLASS III LANDFILL	ANTELOPE VALLEY CLASS III LF	PALMDALE DISPOSAL CO INC	APPROVED	HAZARDOUS WASTE	*	N	N
								ABOVE "REG LEVEL"	*	N	N
								BELOW "REG LEVEL"	*	N	N
6V	2	6B360006NUR-01		GEORGE SE DISP AREA (SITES L-1,2,3)	GAFB,SE,L-1,2,3(AKA LF-07,08)	US AIR FORCE	APPROVED	HAZARDOUS WASTE	*	N	U
								ABOVE "REG LEVEL"	*	N	U
								BELOW "REG LEVEL"	*	N	U

* The requirement for sampling this medium was waived, or (in the case of vadose zone) a soil sampling was analyzed.

TABLE

SITES IDENTIFIED WITH NO WASTE CONSTITUENTS OUTSIDE OF THE WASTE MANAGEMENT UNIT

REG-ION	RANK	WASTE DIS-CHARGER SYSTEM NO.	SOLID WASTE ID NO.	WASTE MANAGEMENT UNIT NAME	FACILITY NAME	AGENCY NAME	REPORT STATUS	WASTE TYPE	MEDIA S	G	V
6V	2	6B360004NUR-01		GEORGE SE DISPOSAL AREA (SITE M-2)	GAFB,SE,M-2 (AKA, DP-15)	US AIR FORCE	APPROVED	HAZARDOUS WASTE	*	N	U
								ABOVE "REG LEVEL"	*	N	U
								BELOW "REG LEVEL"	*	N	U
6V	2	6B360007NUR-01	36-AA-0011	NWC C-1 EAST LANDFILL (SITE 29)	NAWS,C-1 EAST LF (SITE 29)	US NAVY	APPROVED	HAZARDOUS WASTE	N	N	-
								ABOVE "REG LEVEL"	N	N	U
								BELOW "REG LEVEL"	N	N	U
6V	3	6B140300006-01	14-AA-0003	LONE PINE CLASS III LANDFILL	LONE PINE CLASS III LANDFILL	INYO COUNTY DPW	APPROVED	HAZARDOUS WASTE	*	N	*
								ABOVE "REG LEVEL"	*	N	*
								BELOW "REG LEVEL"	*	N	*
6V	[illegible]	6B150303011-01	15-AA-0050	MOJAVE/ROSAMOND LANDFILL	MOJAVE/ROSAMOND LANDFILL	KERN COUNTY DPW	APPROVED	HAZARDOUS WASTE	N	N	N
								ABOVE "REG LEVEL"	N	N	N
								BELOW "REG LEVEL"	N	N	N
6V	3	6B150303022-01	15-AA-0059	RIDGECREST/INYOKERN LANDFILL	RIDGECREST/INYOKERN LANDFILL	KERN COUNTY DPW	APPROVED	HAZARDOUS WASTE	*	N	N
								ABOVE "REG LEVEL"	*	N	N
								BELOW "REG LEVEL"	*	N	N
6V	3	6B360304008-01	36-AA-0050	HESPERIA CLASS III LANDFILL	HESPERIA CLASS III LANDFILL	SAN BERNARDINO COUNTY	APPROVED	HAZARDOUS WASTE	*	N	*
								ABOVE "REG LEVEL"	*	N	*
								BELOW "REG LEVEL"	*	N	*
6V	3	6B360344001-01	36-AA-0068	FORT IRWIN CLASS III LANDFILL	FORT IRWIN CLASS III LANDFILL	FORT IRWIN NAT TRAINING CTR	APPROVED	HAZARDOUS WASTE	*	N	N
								ABOVE "REG LEVEL"	*	N	N
								BELOW "REG LEVEL"	*	N	N
6V	4	6B140300004-01	14-AA-0004	INDEPENDENCE CLASS III LANDFILL	INDEPENDENCE CLASSIII LANDFILL	INYO COUNTY DPW	APPROVED	HAZARDOUS WASTE	*	N	*
								ABOVE "REG LEVEL"	*	N	*
								BELOW "REG LEVEL"	*	N	*
6V	4	6B150007NUR-01		KERN COUNTY-ROSAMOND (OLD)	KERN COUNTY-ROSAMOND (OLD)	KERN COUNTY	APPROVED	HAZARDOUS WASTE	*	N	*
								ABOVE "REG LEVEL"	*	N	*
								BELOW "REG LEVEL"	*	N	*
6V	4	6B260300001-01	26-AA-0006	MONO COUNTY-BENTON LANDFILL	BENTON CLASS III LANDFILL	MONO COUNTY DPW	APPROVED	HAZARDOUS WASTE	N	N	U
								ABOVE "REG LEVEL"	N	N	U
								BELOW "REG LEVEL"	N	N	U
6V	5	6B000001NUR-01		CALMAT KILN DUST SLURRY DISP IMP S	CALMAT KILN DUST SLURRY DISPOS		APPROVED	HAZARDOUS WASTE	N	N	N
								ABOVE "REG LEVEL"	N	N	N
								BELOW "REG LEVEL"	N	N	N
6V	5	6B360304021-01	36-AA-0041	TRONA/ARGUS-CLASS III LANDFILL	TRONA/ARGUS-CLASS III LANDFILL	SAN BERNARDINO COUNTY	APPROVED	HAZARDOUS WASTE	*	N	*
								ABOVE "REG LEVEL"	*	N	*
								BELOW "REG LEVEL"	*	N	*
6V	5	6B360001NUR-01		GEORGE NE DISPOSAL AREA (SITE L-11)		U.S.- AIR FORCE, DEPT. OF THE	APPROVED	HAZARDOUS WASTE	*	N	*
								ABOVE "REG LEVEL"	*	N	*
								BELOW "REG LEVEL"	*	N	U
6V	5	6B000004NUR-01		KILN DUST SLURRY IMPOUNDMENT	SOUTHWEST PORTLAND CEMENT-KILN		APPROVED	HAZARDOUS WASTE	N	N	*
								ABOVE "REG LEVEL"	N	N	-
								BELOW "REG LEVEL"	N	N	*
6V	14	6B360044NUR-01	36-AA-0286	US AIR FORCE-GEORGE AFB SITE L-10	GEORGE AFB (L-10) DISPOSAL SIT	U.S. AIR FORCE	APPROVED	HAZARDOUS WASTE	*	N	*
								ABOVE "REG LEVEL"	*	N	*
								BELOW "REG LEVEL"	*	N	*

* The requirement for sampling this medium was waived, or (in the case of vadose zone) a soil sampling was analyzed.

TABLE VI

SITES IDENTIFIED WITH NO WASTE CONSTITUENTS OUTSIDE OF THE WASTE MANAGEMENT UNIT

REG-ION	RANK	WASTE DIS-CHARGER SYSTEM NO.	SOLID WASTE ID NO.	WASTE MANAGEMENT UNIT NAME	FACILITY NAME	AGENCY NAME	REPORT STATUS	WASTE TYPE	MEDIA S	MEDIA G	MEDIA V
7	1	7A360311011-01	36-AA-0067	USMC-TWENTYNINE PALMS SITE	USMC-AGCC 29 PALMS WMF 95-006	COMMAND.GEN. NREA DIRECTORATE	APPROVED	HAZARDOUS WASTE	*	N	N
								ABOVE "REG LEVEL"	*	N	N
								BELOW "REG LEVEL"	*	N	N
7	1	7A360304281-01	36-AA-0056	BIG BEAR LANDFILL	BIG BEAR CLASS III WMF 91-015	SAN BERNARDINO CO.-SW MGT	APPROVED	HAZARDOUS WASTE	*	N	*
								ABOVE "REG LEVEL"	*	N	*
								BELOW "REG LEVEL"	*	N	*
7	2	7A130303011-01		U.S. GYPSUM COMPANY	US GYPSUM CL. III WMF 88-060	UNITED STATES GYPSUM COMPANY	APPROVED	HAZARDOUS WASTE	*	N	N
								ABOVE "REG LEVEL"	*	N	N
								BELOW "REG LEVEL"	*	N	N
7	3	7A130315001-01		WASTE MANAGEMENT UNIT #3	LAIDLAW - IMP. VLY 88-054	LAIDLAW ENV SERV (IMP VAL) INC.	APPROVED	HAZARDOUS WASTE	*	N	N
								ABOVE "REG LEVEL"	*	N	N
								BELOW "REG LEVEL"	*	N	N
7	5	7A130301051-01	13-AA-0001	WORTHINGTON ROAD LANDFILL	IMPERIAL CLASS III WMF 91-025	IMPERIAL, COUNTY OF	APPROVED	HAZARDOUS WASTE	N	N	N
								ABOVE "REG LEVEL"	N	N	N
								BELOW "REG LEVEL"	N	N	N
7	5	7B360304191-01	36-AA-0038	PARKER DAM WMF	PARKER SWDS 91-049	SAN BERNARDINO CO.-SW MGT.	APPROVED	HAZARDOUS WASTE	N	N	N
								ABOVE "REG LEVEL"	N	N	N
								BELOW "REG LEVEL"	N	N	N
8	1	8 300001NUR-01	30-AB-0170	HUNTINGTON BEACH LEASE "A" SITE	HUNTINGTON BEACH LEASE "A" DIS	CHEVRON U.S.A., WESTERN REGION	APPROVED	HAZARDOUS WASTE	*	N	*
								ABOVE "REG LEVEL"	*	N	*
								BELOW "REG LEVEL"	*	N	*
8	4	8 300009NUR-01		CANNERY STREET DUMP	CANNERY STREET D	ORANGE COUNTY IWMD	APPROVED	HAZARDOUS WASTE	*	N	*
								ABOVE "REG LEVEL"	*	N	*
								BELOW "REG LEVEL"	*	N	*
8	5	8 300013NUR-01		CERRO VILLA	CERRO VILLA	ORANGE COUNTY	APPROVED	HAZARDOUS WASTE	*	*	N
								ABOVE "REG LEVEL"	*	*	N
								BELOW "REG LEVEL"	*	*	N
8	5	8 330005NUR-01	33-AA-0060	RIVERSIDE SAND COMPANY DISPOSAL SITE	RIVERSIDE SAND COMPANY DISPOSA		APPROVED	HAZARDOUS WASTE	*	*	*
								ABOVE "REG LEVEL"	*	*	*
								BELOW "REG LEVEL"	*	*	*
8	5	8 360340001-01	36-AA-0080	HUBBS, JESSE & SONS LANDFILL	LANDFILL,SAN BDNO,INERT	HUBBS, JESSE AND SONS	EXEMPTED	HAZARDOUS WASTE	*	*	*
								ABOVE "REG LEVEL"	*	*	*
								BELOW "REG LEVEL"	*	*	*
8	6	8 332338001-01		THAKAR ALUMINUM CORP.	LANDFILL,CORONA	THAKAR ALUMINIUM CORP.	EXEMPTED	HAZARDOUS WASTE	*	*	*
								ABOVE "REG LEVEL"	*	*	*
								BELOW "REG LEVEL"	*	*	*
8	6	8 360013NUR-01		MILL CREEK DISPOSAL SITE	MILL CREEK	SAN BERNARDINO COUNTY	APPROVED	HAZARDOUS WASTE	*	N	*
								ABOVE "REG LEVEL"	*	N	*
								BELOW "REG LEVEL"	*	N	*
9	1	9 000000261-01	30-AB-0019	PRIMA DESHECHA CANADA LANDFILL	PRIMA DESCHECHA SANIT LANDFILL	ORANGE, CNTY OF,WSTE MGNT PROJ	APPROVED	HAZARDOUS WASTE	*	N	N
								ABOVE "REG LEVEL"	*	N	N
								BELOW "REG LEVEL"	*	N	N
9	3	9 000028N90-01		OLD REFUSE DISPOSAL AREA	OLD REFUSE DISPOSAL AREA	NAVAL AMPHIBIOUS BASE,CORONADO	APPROVED	HAZARDOUS WASTE	N	N	N
								ABOVE "REG LEVEL"	N	N	N
								BELOW "REG LEVEL"	N	N	N

* The requirement for sampling this medium was waived, or (in the case of vadose zone) a soil sampling was analyzed.

SITES IDENTIFIED WITH NO WASTE CONSTITUENTS OUTSIDE OF THE WASTE MANAGEMENT UNIT

REG-ION	RANK	WASTE DIS-CHARGER SYSTEM NO.	SOLID WASTE ID NO.	WASTE MANAGEMENT UNIT NAME	FACILITY NAME	AGENCY NAME	REPORT STATUS	WASTE TYPE	MEDIA S	G	V
9	3	9 000030N90-01		SANDBLAST GRIT DISPOSAL AREA	SANDBLAST GRIT DISPOSAL AREA	NAVAL AMPHIBIOUS BASE,CORONADO	APPROVED	HAZARDOUS WASTE	N	N	N
								ABOVE "REG LEVEL"	N	N	N
								BELOW "REG LEVEL"	N	N	N

TOTAL SITES: 76

* The requirement for sampling this medium was waived, or (in the case of vadose zone) a soil sampling was analyzed.

TABLE VII

SITES WHOSE LEAKAGE STATUS IS UNDETERMINED

REG-ION	RANK	WASTE DIS-CHARGER SYSTEM NO.	SOLID WASTE ID NO.	WASTE MANAGEMENT UNIT NAME	FACILITY NAME	AGENCY NAME	REPORT STATUS	WASTE TYPE	MEDIA S	MEDIA G	MEDIA V
1	1	1B880790NHU-01		ARCATA LANDFILL	ARCATA LANDFILL	STATE LANDS COMMISSION	APPROVED	HAZARDOUS WASTE	U	N	U
								ABOVE "REG LEVEL"	U	N	U
								BELOW "REG LEVEL"	U	N	U
1	2	1B840640SON-02		CLOVERDALE WOODWASTE DISPOSAL SITE	LP-CLOVERDALE WWDS	LOUISIANA-PACIFIC CORPORATION	APPROVED	HAZARDOUS WASTE	U	U	U
								ABOVE "REG LEVEL"	U	U	U
								BELOW "REG LEVEL"	U	U	U
1	3	1A831220DN -01	08-AA-0017	SMITH RIVER WWDS NO. 3	ARCATA REDWOOD COMPANY-WWDS #3	ARCATA REDWOOD COMPANY	EXEMPTED	HAZARDOUS WASTE	U	U	U
								ABOVE "REG LEVEL"	U	U	U
								BELOW "REG LEVEL"	U	U	U
1	3	1B781450HUM-01	12-AA-0034	EEL RIVER SAWMILL-MOZZETTI WWDS NO. 1	EEL R. SAWMLS-MOZZETTI WWDS #1	EEL RIVER SAWMILLS, INC.	EXEMPTED	HAZARDOUS WASTE	U	U	U
								ABOVE "REG LEVEL"	U	U	U
								BELOW "REG LEVEL"	U	U	U
1	3	1B85023RHUM-01		EEL RIVER SAWMILL-MOZZETTI WWDS NO. 2	EEL R. SAWMLS-MOZZETTI WWDS #2	EEL RIVER SAWMILLS	APPROVED	HAZARDOUS WASTE	U	U	U
								ABOVE "REG LEVEL"	U	U	U
								BELOW "REG LEVEL"	U	U	U
1	3	1B910240NHU-01		HUMBOLDT COUNTY-BENBOW LANDFILL	HUMBOLDT COUNTY BENBOW LANDFIL	HUMBOLDT COUNTY	EXEMPTED	HAZARDOUS WASTE	U	U	U
								ABOVE "REG LEVEL"	U	U	U
								BELOW "REG LEVEL"	U	U	U
1	3	1B880710NME-02		WILLITS CITY BURN DUMP (OLD)	PAGE CHROME PITS	PAGE CHROME PITS	APPROVED	HAZARDOUS WASTE	U	U	U
								ABOVE "REG LEVEL"	U	U	U
								BELOW "REG LEVEL"	U	U	U
1	4	1B811440HUM-01	12-AA-0056	RENNER WOODWASTE DISPOSAL SITE	EEL RIVER SAWMILLS-RENNER WWDS	EEL RIVER SAWMILLS, INC.	EXEMPTED	HAZARDOUS WASTE	U	U	U
								ABOVE "REG LEVEL"	U	U	U
								BELOW "REG LEVEL"	U	U	U
1	4	1B880750NHU-01		HUMBOLDT COUNTY-ORICK BURN DUMP	ORICK BURN DUMP	HUMBOLDT COUNTY	EXEMPTED	HAZARDOUS WASTE	U	U	U
								ABOVE "REG LEVEL"	U	U	U
								BELOW "REG LEVEL"	U	U	U
1	4	1B880760NHU-01		HUMBOLDT COUNTY-GARBERVILLE BURN DUMP	GARBERVILLE BURN DUMP	HUMBOLDT COUNTY	EXEMPTED	HAZARDOUS WASTE	U	U	U
								ABOVE "REG LEVEL"	U	U	U
								BELOW "REG LEVEL"	U	U	U
1	4	1B880770NHU-01		EEL RIVER GARBAGE COMPANY BURN DUMP	EEL RIVER GARBAGE FORTUNA SITE	EEL RIVER GARBAGE	EXEMPTED	HAZARDOUS WASTE	U	U	U
								ABOVE "REG LEVEL"	U	U	U
								BELOW "REG LEVEL"	U	U	U
1	4	1B880780NHU-01		HUMBOLDT COUNTY-FERNDALE BURN DUMP	FERNDALE BURN DUMP	HUMBOLDT COUNTY	EXEMPTED	HAZARDOUS WASTE	U	U	U
								ABOVE "REG LEVEL"	U	U	U
								BELOW "REG LEVEL"	U	U	U
1	4	1B910250NHU-01		HUMBOLDT COUNTY-BRIDGEVILLE BURN DUMP	HUMBOLDT COUNTY-BRIDGEVILLE BU	HUMBOLDT COUNTY	EXEMPTED	HAZARDOUS WASTE	U	U	U
								ABOVE "REG LEVEL"	U	U	U
								BELOW "REG LEVEL"	U	U	U
1	4	1B770820MEN-01	23-AA-0014	WILLITS WOODWASTE DISPOSAL SITE NO. 4	LP-WILLITS WWDS #4	LOUISIANA-PACIFIC CORPORATION	EXEMPTED	HAZARDOUS WASTE	U	U	U
								ABOVE "REG LEVEL"	U	U	U
								BELOW "REG LEVEL"	U	U	U
1	5	1B791740HUM-01	12-AA-0076	HELY CREEK WWDS,FORMERLY CARLOTTA	HELY CREEK WWDS	PACIFIC LUMBER COMPANY	APPROVED	HAZARDOUS WASTE	N	N	N
								ABOVE "REG LEVEL"	U	U	U
								BELOW "REG LEVEL"	U	U	U

* The requirement for sampling this medium was waived, or (in the case of vadose zone) a soil sampling was analyzed.

SITES WHOSE LEAKAGE STATUS IS UNDETERMINED

REG-ION	RANK	WASTE DIS-CHARGER SYSTEM NO.	SOLID WASTE ID NO.	WASTE MANAGEMENT UNIT NAME	FACILITY NAME	AGENCY NAME	REPORT STATUS	WASTE TYPE	MEDIA S	MEDIA G	MEDIA V
2	1	2 438010002-02	43-AA-0002	SHORELINE PARK LANDFILL	WDR-CITY OF MOUNTAIN VIEW LDFL	MOUNTAIN VIEW, CITY OF	APPROVED	HAZARDOUS WASTE	N	N	*
								ABOVE "REG LEVEL"	U	U	*
								BELOW "REG LEVEL"	U	U	*
2	3	2 071044002-03		CHEVRON USA-OLD SITES	WDR-RICHMOND REFINERY	CHEVRON USA INC	APPROVED	HAZARDOUS WASTE	U	U	U
								ABOVE "REG LEVEL"	U	U	U
								BELOW "REG LEVEL"	U	U	U
2	4	2 019235001-01		S. P. RAILROAD-WEST OAKLAND SITE	WDR-SO PACIFIC TRANSPORTAT. CO	SOUTHERN PACIFIC TRANSPORT. CO	APPROVED	HAZARDOUS WASTE	U	U	U
								ABOVE "REG LEVEL"	U	U	U
								BELOW "REG LEVEL"	U	U	U
2	5	2 071017002-01		DOW CHEMICAL SITE	WDR-DOW CHEM COMPANY LAND DISP	DOW CHEMICAL COMPANY	APPROVED	HAZARDOUS WASTE	U	U	U
								ABOVE "REG LEVEL"	U	U	U
								BELOW "REG LEVEL"	U	U	U
2	5	2 215142N01-01		CHEVRON USA-OIL SPILL DISPOSAL	CHEVRON USA	CHEVRON USA	APPROVED	HAZARDOUS WASTE	N	U	U
								ABOVE "REG LEVEL"	N	N	N
								BELOW "REG LEVEL"	N	N	N
2	5	2 283076001-01		CLOVER FLAT LANDFILL	WDR-CLOVER FLAT LANDFILL	CLOVER FLAT DISP SERVICE INC.	APPROVED	HAZARDOUS WASTE	N	N	N
								ABOVE "REG LEVEL"	N	U	N
								BELOW "REG LEVEL"	N	U	N
2	6	2 417121N01-01	41-AA-0061	S. P. RAILROAD-BRISBANE (OLD)	BRISBANE LANDFILL	TUNTEX PROPERTIES	APPROVED	HAZARDOUS WASTE	U	U	U
								ABOVE "REG LEVEL"	U	U	U
								BELOW "REG LEVEL"	U	U	U
3	2	3 270300006-01	27-AA-0001	SAN ARDO LANDFILL	SAN ARDO SWDS CLOSURE	MONTEREY COUNTY DPW	APPROVED	HAZARDOUS WASTE	N	N	N
								ABOVE "REG LEVEL"	N	N	N
								BELOW "REG LEVEL"	N	U	N
3	2	3 270305001-01	27-AA-0075	RANCHO LOS LOBOS	RANCHO LOS LOBOS DISPOSAL SITE	AURIGNAC RANCH	APPROVED	HAZARDOUS WASTE	U	U	U
								ABOVE "REG LEVEL"	U	U	U
								BELOW "REG LEVEL"	U	U	U
3	3	3 400302001-01	40-AA-0001	PASO ROBLES CITY LF (OLD WET WEATHER)	SOLID WASTE SITE	PASO ROBLES CITY	APPROVED	HAZARDOUS WASTE	N	N	N
								ABOVE "REG LEVEL"	U	U	U
								BELOW "REG LEVEL"	U	U	U
3	3	3 430307002-01		SAN MARTIN SOLID WASTE DISPOSAL SITE	SAN MARTIN SWDS	SOUTH VALLEY REFUSE DISP.,INC	EXEMPTED	HAZARDOUS WASTE	U	U	U
								ABOVE "REG LEVEL"	U	U	U
								BELOW "REG LEVEL"	U	U	U
3	4	3 270000N30-01	27-AA-0054	SAN ARDO NO. 2	SAN ARDO OIL FIELD	MOBIL, INC.	EXEMPTED	HAZARDOUS WASTE	U	U	U
								ABOVE "REG LEVEL"	U	U	U
								BELOW "REG LEVEL"	U	U	U
3	4	3 270300002-01	27-AA-0002	BRADLEY SANITARY LANDFILL	BRADLEY SWDS CLOSURE	MONTEREY COUNTY DPW	EXEMPTED	HAZARDOUS WASTE	U	U	U
								ABOVE "REG LEVEL"	U	U	U
								BELOW "REG LEVEL"	U	U	U
3	4	3 270300001-01	27-AA-0011	LAKE SAN ANTONIO LANDFILL (NORTH)	LAKE SAN ANTONIO NO SWDS CLOS	MONTEREY COUNTY PARKS DEPT.	EXEMPTED	HAZARDOUS WASTE	U	U	U
								ABOVE "REG LEVEL"	U	U	U
								BELOW "REG LEVEL"	U	U	U
3	4	3 270308001-01	27-AA-0008	SANITARY LANDFILL-SARGEANT CANYON	MOBIL OIL SANITARY LANDFILL	MOBIL OIL CORPORATION	EXEMPTED	HAZARDOUS WASTE	U	U	U
								ABOVE "REG LEVEL"	U	U	U
								BELOW "REG LEVEL"	U	U	U

* The requirement for sampling this medium was waived, or (in the case of vadose zone) a soil sampling was analyzed.

TABLE VII

SITES WHOSE LEAKAGE STATUS IS UNDETERMINED

REG-ION	RANK	WASTE DIS-CHARGER SYSTEM NO.	SOLID WASTE ID NO.	WASTE MANAGEMENT UNIT NAME	FACILITY NAME	AGENCY NAME	REPORT STATUS	WASTE TYPE	MEDIA S	MEDIA G	MEDIA V
3	4	3 350000N03-01		BERTUCCIO SITES	PERKINS RANCH SITE	BERTUCCIO SITES	EXEMPTED	HAZARDOUS WASTE	U	U	U
								ABOVE "REG LEVEL"	U	U	U
								BELOW "REG LEVEL"	U	U	U
3	5	3 270000N36-01	27-AA-0004	PARKFIELD II WASTE DISPOSAL SITE	PARKFIELD DISPOSAL SITE	MONTEREY COUNTY PUBLIC WORKS	EXEMPTED	HAZARDOUS WASTE	U	U	U
								ABOVE "REG LEVEL"	U	U	U
								BELOW "REG LEVEL"	U	U	U
3	5	3 270300003-01	27-AA-0012	SAN ANTONIO SOUTHSHORE DISPOSAL SITE	LAKE SAN ANTONIO SO SWDS CLOS	MONTEREY COUNTY PARKS DEPT.	EXEMPTED	HAZARDOUS WASTE	U	U	U
								ABOVE "REG LEVEL"	U	U	U
								BELOW "REG LEVEL"	U	U	U
3	5	3 400311001-01	40-AA-0006	C.V.C. SERVICE DISTRICT DISPOSAL SITE	SOLID WASTE DISPOSAL SITE	CALIFORNIA VALLEY COMM SERVCS	EXEMPTED	HAZARDOUS WASTE	U	U	U
								ABOVE "REG LEVEL"	U	U	U
								BELOW "REG LEVEL"	U	U	U
3	5	3 400301001-01	40-AA-0009	CAMP SAN LUIS OBISPO LANDFILL	CAMP SAN LUIS SOLID WASTE SITE	MILITARY DEPT / STATE OF CALIF	EXEMPTED	HAZARDOUS WASTE	U	U	U
								ABOVE "REG LEVEL"	U	U	U
								BELOW "REG LEVEL"	U	U	U
3	5	3 420303001-01	42-AA-0013	VENTUCOPA SANITARY LANDFILL	VENTUCOPA SANITARY LANDFILL	SANTA BARBARA COUNTY DPW	EXEMPTED	HAZARDOUS WASTE	U	U	U
								ABOVE "REG LEVEL"	U	U	U
								BELOW "REG LEVEL"	U	U	U
3	9	3 420303002-01	42-AA-0010	NEW CUYAMA LANDFILL	NEW CUYAMA LANDFILL SWDS	SANTA BARBARA COUNTY DPW	EXEMPTED	HAZARDOUS WASTE	U	U	U
								ABOVE "REG LEVEL"	U	U	U
								BELOW "REG LEVEL"	U	U	U
4	1	4A560306004-01		COASTAL LANDFILL	COASTAL LANDFILL	VENTURA REGIONAL SAN DISTRICT	APPROVED	HAZARDOUS WASTE	N	N	*
								ABOVE "REG LEVEL"	N	N	*
								BELOW "REG LEVEL"	N	U	*
4	2	4B190337001-01	19-AA-0027	SAN MARINO CITY LANDFILL	IRWINDALE DISP SITE	STEVE BUBALO, S.L.S. & N. INC.	APPROVED	HAZARDOUS WASTE	U	U	U
								ABOVE "REG LEVEL"	U	U	U
								BELOW "REG LEVEL"	U	U	U
4	2	4A560306002-01	56-AA-0005	VENTURA RSD-TOLAND ROAD LANDFILL	TOLAND RD DISPOSAL SITE	VENTURA REGIONAL SAN DISTRICT	APPROVED	HAZARDOUS WASTE	N	N	N
								ABOVE "REG LEVEL"	N	U	N
								BELOW "REG LEVEL"	U	U	U
4	2	4A560306003-01		VENTURA COUNTY RSD-PIRU LANDFILL	PIRU DUMP-TRANSFER STATION	86 VENTURA REGIONAL SAN DISTRI	APPROVED	HAZARDOUS WASTE	N	U	U
								ABOVE "REG LEVEL"	N	U	U
								BELOW "REG LEVEL"	N	U	U
4	3	4 190027NUR-01		TORRANCE CITY LANDFILL	TORRANCE CITY LANDFILL	CITY OF TORRANCE	APPROVED	HAZARDOUS WASTE	N	N	N
								ABOVE "REG LEVEL"	N	U	N
								BELOW "REG LEVEL"	N	U	N
4	4	4B190352001-02	19-AA-0020	LIVINGSTON-GRAHAM-DUARTE	FISH CANYON DISP SITE	DUARTE, CITY OF	EXEMPTED	HAZARDOUS WASTE	U	U	U
								ABOVE "REG LEVEL"	U	U	U
								BELOW "REG LEVEL"	U	U	U
5F	3	5D161012N01-01		ARMSTRONG RUBBER COMPANY	PIRELLI ARMSTRONG TIRE CORP.	PIRELLI ARMSTRONG TIRE CORP.	APPROVED	HAZARDOUS WASTE	U	U	U
								ABOVE "REG LEVEL"	U	U	U
								BELOW "REG LEVEL"	U	U	U
5F	5	5D100307002-01		HURON SOLID WASTE DISPOSAL SITE	HURON SOLID WASTE SITE	FRESNO, COUNTY OF	EXEMPTED	HAZARDOUS WASTE	U	U	U
								ABOVE "REG LEVEL"	U	U	U
								BELOW "REG LEVEL"	U	U	U

* The requirement for sampling this medium was waived, or (in the case of vadose zone) a soil sampling was analyzed.

SITES WHOSE LEAKAGE STATUS IS UNDETERMINED

REG-ION	RANK	WASTE DIS-CHARGER SYSTEM NO.	SOLID WASTE ID NO.	WASTE MANAGEMENT UNIT NAME	FACILITY NAME	AGENCY NAME	REPORT STATUS	WASTE TYPE	MEDIA S	G	V
5F	5	5D152002N04-01		ELK HILLS 26S(W) - CLOSED	ELK HILLS 26S(W) - CLOSED	BECHTEL PETROLEUM, INC., NPR-1	APPROVED	HAZARDOUS WASTE	U	U	N
								ABOVE "REG LEVEL"	U	U	N
								BELOW "REG LEVEL"	U	U	N
5F	5	5D152002N06-01		ELK HILLS, 36R SWDS - CLOSED	ELK HILLS, 36R SWDS - CLOSED	BECHTEL PETROLEUM, INC., NPR-1	APPROVED	HAZARDOUS WASTE	U	U	N
								ABOVE "REG LEVEL"	U	U	N
								BELOW "REG LEVEL"	U	U	N
5F	5	5D152002N07-01		ELK HILLS 26S(E) SWDS - CLOSED	ELK HILLS 26S(E) SWDS - CLOSED	BECHTEL PETROLEUM, INC., NPR-1	APPROVED	HAZARDOUS WASTE	U	U	N
								ABOVE "REG LEVEL"	U	U	N
								BELOW "REG LEVEL"	U	U	N
5F	5	5D160002NUR-01	16-AA-0007	KETTLEMAN CITY LANDFILL	KETTLEMAN CITY SANITARY LANDFI	COUNTY OF KINGS	EXEMPTED	HAZARDOUS WASTE	U	U	
								ABOVE "REG LEVEL"	U	U	
								BELOW "REG LEVEL"	U	U	
5F	6	5D100316001-01	10-AA-0018	RICE ROAD LAND RECLAMATION INCORP.	RICE ROAD SOLID WASTE SITE	RICE ROAD LAND RECLAMATION CO.	APPROVED	HAZARDOUS WASTE	U	U	U
								ABOVE "REG LEVEL"	U	U	U
								BELOW "REG LEVEL"	U		
5R	4	5A180301N01-01		LASSEN COUNTY CLEAR CREEK BURN DUMP	CLEAR CREEK BURN DUMP (CLOSED)	LASSEN COUNTY OF	EXEMPTED	HAZARDOUS WASTE	U		
								ABOVE "REG LEVEL"	U	U	U
								BELOW "REG LEVEL"	U	U	U
5S	3	5A460300001-02	46-AA-0001	SIERRA COUNTY LOYALTON NO. 2 LANDFILL	LOYALTON SANITARY LANDFILL	SIERRA COUNTY PWD	APPROVED	HAZARDOUS WASTE	U	U	
								ABOVE "REG LEVEL"	U	U	U
								BELOW "REG LEVEL"	U	U	U
5S	4	5 050002NUR-01		CALAVERAS COUNTY-ANGELS CAMP	CALAVERAS COUNTY-ANGELS CAMP	CALVERAS COUNTY	EXEMPTED	HAZARDOUS WASTE	U	U	U
								ABOVE "REG LEVEL"	U	U	U
								BELOW "REG LEVEL"	U	U	U
5S	4	5 050001NUR-01		CALAVERAS COUNTY-SAN ANDREAS	CALAVERAS COUNTY-SAN ANDREAS	CALAVERAS COUNTY	EXEMPTED	HAZARDOUS WASTE	U	U	U
								ABOVE "REG LEVEL"	U	U	U
								BELOW "REG LEVEL"	U	U	U
5S	4	5 060001NUR-01		WILLIAMS CITY LANDFILL	WILLIAMS CITY LANDFILL	CITY OF WILLIAMS	EXEMPTED	HAZARDOUS WASTE	U	U	U
								ABOVE "REG LEVEL"	U	U	
								BELOW "REG LEVEL"	U	U	U
5S	4	5 110001NUR-01		WILLOWS CITY GLENN CO.	WILLOWS CITY GLENN CO.	CITY OF WILLOWS	EXEMPTED	HAZARDOUS WASTE	U	U	U
								ABOVE "REG LEVEL"	U	U	U
								BELOW "REG LEVEL"	U	U	U
5S	4	5A572000003-01	57-AA-0005	DELTA SUGAR	LANDFILL OPERATIONS CLASS II-2	DELTA SUGAR CORPORATION	EXEMPTED	HAZARDOUS WASTE	U	U	U
								ABOVE "REG LEVEL"	U	U	U
								BELOW "REG LEVEL"	U	U	U
5S	5	5 060004NUR-01		COLUSA COUNTY-COLULSA	COLUSA COUNTY-COLUSA	COLUSA COUNTY	EXEMPTED	HAZARDOUS WASTE	U	U	U
								ABOVE "REG LEVEL"	U	U	U
								BELOW "REG LEVEL"	U	U	U
5S	5	5 310005NUR-01		DEWITT STATE HOSPITAL	DEWITT STATE HOSPITAL	STATE OF CALIFORNIA	EXEMPTED	HAZARDOUS WASTE	U	U	
								ABOVE "REG LEVEL"	U	U	
								BELOW "REG LEVEL"	U	U	
5S	5	5A310306001-01	31-AA-0220	CITY OF LINCOLN DISPOSAL SITE	CLOSURE OF LINCOLN LANDFILL	LINCOLN, CITY OF	EXEMPTED	HAZARDOUS WASTE	U	U	U
								ABOVE "REG LEVEL"	U	U	U
								BELOW "REG LEVEL"	U	U	U

* The requirement for sampling this medium was waived, or (in the case of vadose zone) a soil sampling was analyzed.

TABLE VII

SITES WHOSE LEAKAGE STATUS IS UNDETERMINED

REG-ION	RANK	WASTE DIS-CHARGER SYSTEM NO.	SOLID WASTE ID NO.	WASTE MANAGEMENT UNIT NAME	FACILITY NAME	AGENCY NAME	REPORT STATUS	WASTE TYPE	MEDIA S	MEDIA G	MEDIA V
5S	5	5B390308002-01	39-AA-0003	HARNEY LANE LANDFILL	HARNEY LANE CLASS III LANDFILL	SAN JOAQUIN COUNTY P W DEPT.	APPROVED	HAZARDOUS WASTE	N	N	N
								ABOVE "REG LEVEL"	N	N	N
								BELOW "REG LEVEL"	N	U	N
5S	6	5 110003NUR-01		GLENN COUNTY-ORLAND LANDFILL	GLENN COUNTY-ORLAND LANDFILL	GLENN COUNTY DEPT. OF PUBLIC	EXEMPTED	HAZARDOUS WASTE	U	U	U
								ABOVE "REG LEVEL"	U	U	U
								BELOW "REG LEVEL"	U	U	U
5S	6	5A580302001-02	58-AA-0003	TRIPLETT DISPOSAL SITE-MARYSVILLE	SOLID WASTE DISPOSAL SITE	YUBA-SUTTER DISPOSAL, INC.	EXEMPTED	HAZARDOUS WASTE	U	U	U
								ABOVE "REG LEVEL"	U	U	U
								BELOW "REG LEVEL"	U	U	U
6T	2	6A180019000-01		SIERRA ARMY DEPOT SWDS	SIERRA ARMY DEPOT SWDS	US ARMY	APPROVED	HAZARDOUS WASTE	U	U	U
								ABOVE "REG LEVEL"	U	U	U
								BELOW "REG LEVEL"	U	U	U
6T	3	6A180010000-01	18-AA-0011	HERLONG SOLID WASTE DISPOSAL SITE	HERLONG SOLID WDS	LASSEN COUNTY	APPROVED	HAZARDOUS WASTE	W	N	N
								ABOVE "REG LEVEL"	W	N	N
								BELOW "REG LEVEL"	W	N	N
6T	3	6A260004000-01	26-AA-0002	BRIDGEPORT LANDFILL	BRIDGEPORT SWDS	MONO COUNTY-DEPT PUB WORKS	APPROVED	HAZARDOUS WASTE	U	U	U
								ABOVE "REG LEVEL"	U	U	U
								BELOW "REG LEVEL"	U	U	U
6T	5	6A310001NUR-01		TAHOE CITY LANDFILL	TAHOE CITY LANDFILL		APPROVED	HAZARDOUS WASTE	U	U	U
								ABOVE "REG LEVEL"	U	U	U
								BELOW "REG LEVEL"	U	U	U
6V	4	6B360702005-01	36-AA-0001	YERMO CLASS III LANDFILL	YERMO CLASS III LANDFILL	US MARINE CORPS LOGISTICS BASE	APPROVED	HAZARDOUS WASTE	U	N	U
								ABOVE "REG LEVEL"	U	U	U
								BELOW "REG LEVEL"	U	U	U
7	3	7B360304171-01	36-AA-0059	SAN BERNARDINO COUNTY-NEEDLES LANDFILL	NEEDLES CLS III WMF 92-019	NEEDLES, CITY OF	APPROVED	HAZARDOUS WASTE	*	U	U
								ABOVE "REG LEVEL"	*	U	U
								BELOW "REG LEVEL"	*	U	U
7	4	7A130300011-01	13-AA-0019	IMPERIAL COUNTY SANITARY	IMPERIAL CO.SANIT.SWDS 83-060	IMPERIAL CO.SANIT.CO-MALS PROP	APPROVED	HAZARDOUS WASTE	U	U	U
								ABOVE "REG LEVEL"	U	U	U
								BELOW "REG LEVEL"	U	U	U
8	5	8 300012NUR-01		REEVE PIT	REEVE PIT	ORANGE COUNTY	APPROVED	HAZARDOUS WASTE	N	N	*
								ABOVE "REG LEVEL"	U	U	*
								BELOW "REG LEVEL"	U	U	*
8	5	8 300015NUR-01		NEWPORT AVENUE	NEWPORT AVENUE	ORANGE COUNTY	APPROVED	HAZARDOUS WASTE	*	N	*
								ABOVE "REG LEVEL"	*	U	*
								BELOW "REG LEVEL"	*	U	*
9	1	9 000029N90-01		OLD SPANISH BIGHT LANDFILL	OLD SPANISH BIGHT LANDFILL	NAVAL AIR STATION,NORTH ISLAND	APPROVED	HAZARDOUS WASTE	N	N	N
								ABOVE "REG LEVEL"	N	U	N
								BELOW "REG LEVEL"	N	U	N
9	4	9 000031N90-01		ADMIRAL BAKER GOLF COURSE	ADMIRAL BAKER GOLF COURSE	NAVAL STATION	APPROVED	HAZARDOUS WASTE	N	N	N
								ABOVE "REG LEVEL"	U	U	U
								BELOW "REG LEVEL"	U	U	U
9	4	9 370030244-01	37-AA-0002	VALLEY CENTER CLOSED LANDFILL	VALLEY CENTER LANDFILL	SAN DIEGO, COUNTY OF	APPROVED	HAZARDOUS WASTE	U	U	U
								ABOVE "REG LEVEL"	U	U	U
								BELOW "REG LEVEL"	U	U	U

* The requirement for sampling this medium was waived, or (in the case of vadose zone) a soil sampling was analyzed.

TABLE VII

SITES WHOSE LEAKAGE STATUS IS UNDETERMINED

REG-ION	RANK	WASTE DIS-CHARGER SYSTEM NO.	SOLID WASTE ID NO.	WASTE MANAGEMENT UNIT NAME	FACILITY NAME	AGENCY NAME	REPORT STATUS	WASTE TYPE	MEDIA S	MEDIA G	MEDIA V
9	12	9 000001N90-01		CORONADO LANDFILL -- (BURN DUMP)	RANCHO CARRILLO, GRAND CRIBE	SIGNAL LANDMARK	APPROVED	HAZARDOUS WASTE	U	N	N
								ABOVE "REG LEVEL"	U	N	N
								BELOW "REG LEVEL"	U	N	N

TOTAL SITES: 76

* The requirement for sampling this medium was waived, or (in the case of vadose zone) a soil sampling was analyzed.

CONSTITUENT ENTRIES FOR SITES IN ALL REGIONS

CONSTITUENT	BACK-GROUND	SURFACE	GROUND-WATER	VADOSE	LEACH-ATE	TOTAL
2 TOC	26	12	40	2	14	94
3 TDS	161	36	179	15	38	429
4 COD(Chem Oxy Demand)	41	15	61	5	17	139
5 Alkalinity	59	19	67	8	16	169
6 Ammonia (As N)	3	5	9	0	3	20
7 Bicarbonate (HCO3)	44	13	54	6	13	130
8 Calcium	77	29	90	12	22	230
9 Chloride	103	39	142	11	35	330
10 Iron	80	34	113	16	26	269
11 Magnesium	70	26	83	12	22	213
12 Manganese	80	30	110	15	30	265
13 Nitrate (As N)	71	27	99	10	29	236
14 Potassium	57	28	73	11	22	191
15 Sodium	74	32	92	11	23	232
16 Sulfate	85	32	112	11	26	266
17 Sulfides	1	3	7	1	4	16
18 Arsenic	30	19	68	12	15	144
19 Barium	50	24	76	16	22	188
20 Cadmium	19	10	47	8	8	92
21 Chromium	43	19	77	17	21	177
22 Cyanide	1	2	6	0	0	9
23 Lead	25	15	61	14	17	132
24 Mercury	12	6	33	4	15	70
25 Selenium	21	13	43	5	14	96
26 Silver	11	7	29	5	9	61
27 Acetone	4	10	34	9	9	66
28 Benzene	15	10	111	12	21	169
29 Bromomethane	2	1	6	0	1	10
30 Bromoform	0	3	4	0	2	9
31 Carbon Tetrachloride	1	1	7	0	1	10
32 Chlorobenzene	4	5	45	2	6	62
33 Chloroethane	1	0	13	0	4	18
34 Chloroform	11	4	48	1	4	68
35 Chloromethane	2	1	13	2	2	20
36 Dibromochloromethane	2	1	8	0	0	11
37 1,2-Dichlorobenzene	2	2	19	1	2	26
38 1,3-Dichlorobenzene	1	0	5	0	1	7
39 1,4-Dichlorobenzene	6	4	49	5	7	71
40 Dichlorodifluoromethane	6	1	41	1	5	54
41 1,1-Dichloroethane	6	1	65	4	6	82
42 1,2-Dichloroethane	5	2	41	3	4	55
43 1,1-Dichloroethylene	2	0	33	5	0	40
44 cis-1,2-Dichloroethylene	4	2	36	1	4	47
45 trans-1,2-Dichloroethylene	4	3	32	2	5	46
46 Dichloromethane	4	4	63	7	7	85
47 1,2-Dichloropropane	2	1	17	1	1	22
48 1,3-Dichloropropene	0	0	2	0	0	2
49 Ethylbenzene	5	3	26	6	5	45
50 Metyl Ethyl Ketone	2	2	17	4	4	29
51 Styrene	0	0	0	0	3	3
52 1,1,2,2-Tetrachloroethane	0	0	9	0	2	11
53 Tetrachloroethylene	16	5	101	4	10	136
54 Toluene	17	9	87	21	15	149
55 1,1,1-Trichloroethane	3	0	37	2	1	43
56 1,1,2-Trichloroethane	1	1	9	1	1	13
57 Trichloroethylene	16	6	123	8	14	167
58 Trichlorofluoromethane	4	0	23	2	2	31
59 Vinyl Chloride	8	6	74	6	14	108
60 Xylene	11	5	46	14	12	88
GRAND TOTALS	1411	588	3015	351	636	6001

CHEMICAL CONSTITUENTS EXCEEDING "BENEFICIAL USE" CRITERIA LIMITS COMPARED TO DEPTH TO GROUND WATER (FEET)

	DEPTH TO GROUND WATER (FEET)												
	0 TO 10	10 TO 20	20 TO 30	30 TO 40	40 TO 50	50 TO 75	75 TO 100	100 TO 200	200 TO 300	300 TO 500	500 OR MORE	NO DATA	TOTAL
SITES PER CATEGORY	50	30	21	12	14	25	10	35	3	6	1	63	270
pH	0	0	0	0	0	0	0	0	0	0	0	0	0
TOC	0	0	0	0	0	0	0	0	0	0	0	0	0
TDS	0	0	0	0	0	0	0	0	0	0	0	0	0
COD(Chem Oxy Demand)	0	0	0	0	0	0	0	0	0	0	0	0	0
Alkalinity	0	0	0	0	0	0	0	0	0	0	0	0	0
Ammonia (As N)	0	0	0	0	0	0	0	0	0	0	0	0	0
Bicarbonate (HCO3)	0	0	0	0	0	0	0	0	0	0	0	0	0
Calcium	0	0	0	0	0	0	0	0	0	0	0	0	0
Chloride	0	0	0	0	0	0	0	0	0	0	0	0	0
Iron	1	2	1	0	0	1	0	0	0	0	0	3	8
Magnesium	0	0	0	0	0	0	0	0	0	0	0	0	0
Manganese	2	0	1	0	2	0	1	0	0	0	0	3	9
Nitrate (As N)	0	0	0	0	0	0	0	0	0	0	0	0	0
Potassium	0	0	0	0	0	0	0	0	0	0	0	0	0
Sodium	0	0	0	0	0	0	0	0	0	0	0	0	0
Sulfate	0	0	0	0	0	0	0	0	0	0	0	0	0
Sulfides	0	0	0	0	0	0	0	0	0	0	0	0	0
Arsenic	1	0	2	0	0	0	0	0	0	0	0	3	6
Barium	1	0	0	0	0	0	0	0	0	0	0	0	1
Cadmium	0	0	1	0	0	0	0	0	1	0	0	0	2
Chromium (total)	1	0	1	0	0	0	0	0	0	0	0	1	3
Cyanide	0	0	0	0	0	0	0	0	0	0	0	0	0
Lead	4	0	1	0	0	2	0	0	0	0	0	6	13
Mercury (inorganic)	0	0	0	0	0	0	0	0	0	0	0	0	0
Selenium	0	0	1	0	0	0	0	0	0	0	0	0	1
Silver	0	0	1	0	0	0	0	0	0	0	0	0	1
Acetone	0	0	0	0	0	0	0	0	0	0	0	0	0
Benzene	15	6	8	4	6	11	2	8	0	0	1	17	78
Bromomethane	0	0	0	0	0	0	0	0	0	0	0	0	0
Bromoform	0	0	0	0	0	0	0	0	0	0	0	0	0
Carbon tetrachloride	1	0	0	1	0	0	0	1	0	0	0	1	4
Chlorobenzene	6	1	1	0	0	0	0	0	0	0	0	1	9
Chloroethane	1	0	0	0	0	0	0	0	0	0	0	0	1
Chloroform	3	1	1	1	0	2	0	3	0	0	0	1	12
Chloromethane	0	0	0	0	0	0	0	0	0	0	0	0	0
Dibromochloromethane	0	1	1	0	1	0	0	0	0	0	0	1	4
1,2-Dichlorobenzene	1	1	0	0	0	1	0	0	0	0	0	0	3
1,3-Dichlorobenzene	0	0	0	0	0	0	0	0	0	0	0	0	0
1,4-Dichlorobenzene	3	3	1	2	0	1	0	2	0	0	0	8	20
Dichlorodifluoromethane	0	0	0	0	0	0	0	0	0	0	0	0	0
1,1-Dichloroethane	7	4	1	1	0	3	1	8	1	0	1	6	33
1,2-Dichloroethane	5	3	2	1	2	6	1	9	1	0	0	6	36
1,1-Dichloroethylene	2	4	0	1	0	0	1	0	0	0	1	5	14
cis-1,2-Dichloroethylene	6	2	1	1	4	1	1	3	0	0	1	4	24
trans-1,2-Dichloroethylene	2	2	2	2	0	0	0	3	0	0	0	2	13
Dichloromethane	10	5	0	0	1	4	1	10	0	0	1	8	40
1,2-Dichloropropane	1	0	2	0	0	2	0	0	0	0	0	1	6
1,3-Dichloropropene	0	0	1	0	0	0	0	0	0	0	0	1	2
Ethylbenzene	3	2	1	1	0	0	0	0	0	0	0	2	9
Methyl ethyl ketone(MEK	0	0	0	0	0	0	0	0	0	0	0	0	0
Styrene	0	0	0	0	0	0	0	0	0	0	0	0	0
1,1,2,2-Tetrachloroethane	1	0	0	0	0	1	1	0	0	0	0	1	4
Tetrachloroethylene(PCE	7	3	6	1	0	7	6	16	1	0	0	14	61
Toluene	6	2	0	2	0	1	1	2	1	0	0	3	18
1,1,1-Trichloroethane	0	0	0	0	0	0	0	0	0	0	0	1	1
1,1,2-Trichloroethane	1	0	0	0	0	1	0	1	0	0	0	0	3
Trichloroethylene (TCE)	12	7	8	3	6	7	3	12	1	0	1	20	80
Trichlorofluoromethane	0	0	0	0	0	0	0	0	0	0	0	0	0
Vinyl chloride	14	6	6	3	4	5	2	9	1	0	1	15	66
Xylene(s)	5	0	0	0	0	1	0	2	0	0	0	3	11
Conductivity	0	0	0	0	0	0	0	1	0	0	0	0	1
Copper	0	0	0	0	0	0	1	0	0	0	0	0	1
DDD	0	0	0	0	0	1	0	0	0	0	0	0	1
Aldicarb	0	0	0	0	0	1	0	0	0	0	0	0	1
Baygon	0	0	0	0	0	1	0	0	0	0	0	0	1
Carbofuran	0	0	0	0	0	1	0	0	0	0	0	0	1
alpha-BHC	0	0	1	0	0	0	0	0	0	0	0	0	1
Heptachlor	1	1	0	0	0	0	0	0	0	0	0	0	2
Endrin	0	0	0	0	0	0	0	0	0	0	0	1	1
Bromodichloromethane	0	0	0	1	0	0	0	0	0	0	0	1	2
Ethion	0	0	0	0	0	0	0	1	0	0	0	0	1

CHEMICAL CONSTITUENTS EXCEEDING "BENEFICIAL USE" CRITERIA LIMITS COMPARED TO DEPTH TO GROUND WATER (FEET)

	DEPTH TO GROUND WATER (FEET)												
	0 TO 10	10 TO 20	20 TO 30	30 TO 40	40 TO 50	50 TO 75	75 TO 100	100 TO 200	200 TO 300	300 TO 500	500 OR MORE	NO DATA	TOTAL
SITES PER CATEGORY	50	30	21	12	14	25	10	35	3	6	1	63	270
GENERAL MINERALS	0	0	0	0	0	0	0	1	0	0	0	0	1
METALS	7	2	2	0	2	3	1	0	1	0	0	13	31
ORGANIC COMPOUNDS	35	16	15	9	10	17	7	26	2	0	1	41	179

NOTE: Some sites may be counted twice because they are leaking more than one type of constituent (e.g., general minerals and organics).

	DEPTH TO GROUND WATER (FEET)												
	0 TO 10	10 TO 20	20 TO 30	30 TO 40	40 TO 50	50 TO 75	75 TO 100	100 TO 200	200 TO 300	300 TO 500	500 OR MORE	NO DATA	TOTAL
SITES PER CATEGORY	50	30	21	12	14	25	10	35	3	6	1	63	270
ANY CONSTITUENT	38	18	15	9	11	18	8	26	2	0	1	46	192
PERCENTAGE	76%	60%	71%	75%	79%	72%	80%	74%	67%	0%	100%	73%	71%

TOTAL SITES CHECKED: 544

NOTE: DATA SCANNED ONLY FOR THE FOLLOWING REGULATORY LIMITS:

DHS PRIMARY MAXIMUM CONTAMINANT LEVEL
DHS SECONDARY MAXIMUM CONTAMINANT LEVEL
US EPA PRIMARY MAXIMUM CONTAMINANT LEVEL
US EPA SECONDARY MAXIMUM CONTAMINANT LEVEL
DHS ACTION LEVEL -- TOXICITY
PROP 65 REG. LEVEL AS A WATER QUALITY CRITERION

CHEMICAL CONSTITUENTS EXCEEDING "BENEFICIAL USE" CRITERIA LIMIT COMPARED TO AVERAGE ANNUAL PRECIPITATION (INCHES)

	AVERAGE ANNUAL PRECIPITATION (INCHES)												
	0 TO 5	5 TO 10	10 TO 15	15 TO 20	20 TO 25	25 TO 30	30 TO 35	35 TO 40	40 TO 45	45 TO 50	50 OR MORE	NO DATA	TOTAL
SITES PER CATEGORY	15	25	97	69	18	8	4	15	3	4	5	7	270
pH	0	0	0	0	0	0	0	0	0	0	0	0	0
TOC	0	0	0	0	0	0	0	0	0	0	0	0	0
TDS	0	0	0	0	0	0	0	0	0	0	0	0	0
COD(Chem Oxy Demand)	0	0	0	0	0	0	0	0	0	0	0	0	0
Alkalinity	0	0	0	0	0	0	0	0	0	0	0	0	0
Ammonia (As N)	0	0	0	0	0	0	0	0	0	0	0	0	0
Bicarbonate (HCO3)	0	0	0	0	0	0	0	0	0	0	0	0	0
Calcium	0	0	0	0	0	0	0	0	0	0	0	0	0
Chloride	0	0	0	0	0	0	0	0	0	0	0	0	0
Iron	0	1	1	2	2	1	0	0	0	1	0	0	8
Magnesium	0	0	0	0	0	0	0	0	0	0	0	0	0
Manganese	0	0	1	3	2	1	0	1	0	0	0	1	9
Nitrate (As N)	0	0	0	0	0	0	0	0	0	0	0	0	0
Potassium	0	0	0	0	0	0	0	0	0	0	0	0	0
Sodium	0	0	0	0	0	0	0	0	0	0	0	0	0
Sulfate	0	0	0	0	0	0	0	0	0	0	0	0	0
Sulfides	0	0	0	0	0	0	0	0	0	0	0	0	0
Arsenic	0	1	2	0	1	0	0	0	0	0	0	2	6
Barium	0	0	1	0	0	0	0	0	0	0	0	0	1
Cadmium	0	0	1	0	1	0	0	0	0	0	0	0	2
Chromium (total)	0	0	1	1	1	0	0	0	0	0	0	0	3
Cyanide	0	0	0	0	0	0	0	0	0	0	0	0	0
Lead	0	1	5	4	2	1	0	0	0	0	0	0	13
Mercury (inorganic)	0	0	0	0	0	0	0	0	0	0	0	0	0
Selenium	0	0	0	0	1	0	0	0	0	0	0	0	1
Silver	0	0	0	0	1	0	0	0	0	0	0	0	1
Acetone	0	0	0	0	0	0	0	0	0	0	0	0	0
Benzene	1	7	30	24	8	2	1	1	1	1	1	1	78
Bromomethane	0	0	0	0	0	0	0	0	0	0	0	0	0
Bromoform	0	0	0	0	0	0	0	0	0	0	0	0	0
Carbon tetrachloride	1	0	0	1	1	0	0	0	1	0	0	0	4
Chlorobenzene	0	0	3	5	1	0	0	0	0	0	0	0	9
Chloroethane	0	0	0	1	0	0	0	0	0	0	0	0	1
Chloroform	0	0	4	6	1	0	0	0	1	0	0	0	12
Chloromethane	0	0	0	0	0	0	0	0	0	0	0	0	0
Dibromochloromethane	0	0	1	1	0	0	0	1	1	0	0	0	4
1,2-Dichlorobenzene	0	0	2	1	0	0	0	0	0	0	0	0	3
1,3-Dichlorobenzene	0	0	0	0	0	0	0	0	0	0	0	0	0
1,4-Dichlorobenzene	1	2	7	9	1	0	0	0	0	0	0	0	20
Dichlorodifluoromethane	0	0	0	0	0	0	0	0	0	0	0	0	0
1,1-Dichloroethane	3	2	15	10	1	0	0	2	0	0	0	0	33
1,2-Dichloroethane	0	3	14	16	3	0	0	0	0	0	0	0	36
1,1-Dichloroethylene	0	0	7	5	2	0	0	0	0	0	0	0	14
cis-1,2-Dichloroethylene	1	0	11	10	1	1	0	0	0	0	0	0	24
trans-1,2-Dichloroethylene	0	1	8	3	1	0	0	0	0	0	0	0	13
Dichloromethane	4	4	16	13	1	0	0	1	0	0	0	1	40
1,2-Dichloropropane	0	1	4	1	0	0	0	0	0	0	0	0	6
1,3-Dichloropropene	0	1	1	0	0	0	0	0	0	0	0	0	2
Ethylbenzene	0	1	4	3	1	0	0	0	0	0	0	0	9
Methyl ethyl ketone(MEK	0	0	0	0	0	0	0	0	0	0	0	0	0
Styrene	0	0	0	0	0	0	0	0	0	0	0	0	0
1,1,2,2-Tetrachloroethane	0	0	2	1	1	0	0	0	0	0	0	0	4
Tetrachloroethylene(PCE	4	9	27	17	3	0	0	1	0	0	0	0	61
Toluene	1	2	4	4	2	2	1	1	1	0	0	0	18
1,1,1-Trichloroethane	0	0	0	0	1	0	0	0	0	0	0	0	1
1,1,2-Trichloroethane	1	0	2	0	0	0	0	0	0	0	0	0	3
Trichloroethylene (TCE)	4	5	36	27	5	0	0	2	0	0	0	1	80
Trichlorofluoromethane	0	0	0	0	0	0	0	0	0	0	0	0	0
Vinyl chloride	1	3	26	22	7	0	1	4	1	0	1	0	66
Xylene(s)	0	0	2	5	1	1	1	1	0	0	0	0	11
Conductivity	0	1	0	0	0	0	0	0	0	0	0	0	1
Copper	0	0	1	0	0	0	0	0	0	0	0	0	1
DDD	0	0	1	0	0	0	0	0	0	0	0	0	1
Aldicarb	0	0	1	0	0	0	0	0	0	0	0	0	1
Baygon	0	0	1	0	0	0	0	0	0	0	0	0	1
Carbofuran	0	0	1	0	0	0	0	0	0	0	0	0	1
alpha-BHC	0	0	1	0	0	0	0	0	0	0	0	0	1
Heptachlor	0	0	2	0	0	0	0	0	0	0	0	0	2
Endrin	0	0	1	0	0	0	0	0	0	0	0	0	1
Bromodichloromethane	0	0	1	1	0	0	0	0	0	0	0	0	2
Ethion	0	1	0	0	0	0	0	0	0	0	0	0	1

TABLE XI

CHEMICAL CONSTITUENTS EXCEEDING "BENEFICIAL USE" CRITERIA LIMIT COMPARED TO AVERAGE ANNUAL PRECIPITATION (INCHES)

	AVERAGE ANNUAL PRECIPITATION (INCHES)												
	0 TO 5	5 TO 10	10 TO 15	15 TO 20	20 TO 25	25 TO 30	30 TO 35	35 TO 40	40 TO 45	45 TO 50	50 OR MORE	NO DATA	TOTAL
SITES PER CATEGORY	15	25	97	69	18	8	4	15	3	4	5	7	270
GENERAL MINERALS	0	1	0	0	0	0	0	0	0	0	0	0	1
METALS	0	3	10	9	3	1	0	1	0	1	0	3	31
ORGANIC COMPOUNDS	8	15	70	53	15	3	2	7	2	1	1	2	179

NOTE: Some sites may be counted twice because they are leaking more than one type of constituent (e.g., general minerals and organics).

	AVERAGE ANNUAL PRECIPITATION (INCHES)												
	0 TO 5	5 TO 10	10 TO 15	15 TO 20	20 TO 25	25 TO 30	30 TO 35	35 TO 40	40 TO 45	45 TO 50	50 OR MORE	NO DATA	TOTAL
SITES PER CATEGORY	15	25	97	69	18	8	4	15	3	4	5	7	270
ANY CONSTITUENT	8	16	76	56	15	3	2	7	2	2	1	4	192
PERCENTAGE	53%	64%	78%	81%	83%	38%	50%	47%	67%	50%	20%	57%	71%

TOTAL SITES CHECKED: 544

NOTE: DATA SCANNED ONLY FOR THE FOLLOWING REGULATORY LIMITS:

DHS PRIMARY MAXIMUM CONTAMINANT LEVEL
DHS SECONDARY MAXIMUM CONTAMINANT LEVEL
US EPA PRIMARY MAXIMUM CONTAMINANT LEVEL
US EPA SECONDARY MAXIMUM CONTAMINANT LEVEL
DHS ACTION LEVEL -- TOXICITY
PROP 65 REG. LEVEL AS A WATER QUALITY CRITERION

CHEMICAL CONSTITUENTS EXCEEDING "BENEFICIAL USE" CRITERIA LIMIT COMPARED TO WASTE ACCEPTANCE RATE IN TONS PER DAY

	WASTE ACCEPTANCE RATE IN TONS PER DAY											
	0 TO 10	10 TO 20	20 TO 50	50 TO 100	100 TO 200	200 TO 300	300 TO 400	400 TO 500	500 TO 1000	1000 OR MORE	NO * DATA	TOTAL
SITES PER CATEGORY	9	8	17	16	11	8	8	6	11	25	151	270
pH	0	0	0	0	0	0	0	0	0	0	0	0
TOC	0	0	0	0	0	0	0	0	0	0	0	0
TDS	0	0	0	0	0	0	0	0	0	0	0	0
COD(Chem Oxy Demand)	0	0	0	0	0	0	0	0	0	0	0	0
Alkalinity	0	0	0	0	0	0	0	0	0	0	0	0
Ammonia (As N)	0	0	0	0	0	0	0	0	0	0	0	0
Bicarbonate (HCO3)	0	0	0	0	0	0	0	0	0	0	0	0
Calcium	0	0	0	0	0	0	0	0	0	0	0	0
Chloride	0	0	0	0	0	0	0	0	0	0	0	0
Iron	0	0	1	0	0	0	0	1	0	1	5	8
Magnesium	0	0	0	0	0	0	0	0	0	0	0	0
Manganese	1	0	2	1	0	0	0	0	0	1	4	9
Nitrate (As N)	0	0	0	0	0	0	0	0	0	0	0	0
Potassium	0	0	0	0	0	0	0	0	0	0	0	0
Sodium	0	0	0	0	0	0	0	0	0	0	0	0
Sulfate	0	0	0	0	0	0	0	0	0	0	0	0
Sulfides	0	0	0	0	0	0	0	0	0	0	0	0
Arsenic	0	0	2	0	0	0	0	0	0	1	3	6
Barium	0	0	0	0	0	0	0	0	0	1	0	1
Cadmium	0	0	1	0	1	0	0	0	0	0	0	2
Chromium (total)	0	0	1	0	0	0	0	0	0	1	1	3
Cyanide	0	0	0	0	0	0	0	0	0	0	0	0
Lead	0	0	2	0	0	0	0	0	1	0	10	13
Mercury (inorganic)	0	0	0	0	0	0	0	0	0	0	0	0
Selenium	0	0	1	0	0	0	0	0	0	0	0	1
Silver	0	0	1	0	0	0	0	0	0	0	0	1
Acetone	0	0	0	0	0	0	0	0	0	0	0	0
Benzene	1	0	5	3	2	5	2	2	4	14	40	78
Bromomethane	0	0	0	0	0	0	0	0	0	0	0	0
Bromoform	0	0	0	0	0	0	0	0	0	0	0	0
Carbon tetrachloride	0	0	0	1	1	0	0	0	0	1	1	4
Chlorobenzene	0	0	0	0	0	0	0	0	0	2	7	9
Chloroethane	0	0	0	0	0	0	0	0	0	0	1	1
Chloroform	0	0	0	0	0	0	0	0	0	2	7	12
Chloromethane	0	0	1	1	1	0	0	0	0	0	0	0
Dibromochloromethane	0	0	0	0	0	0	0	0	1	0	1	4
1,2-Dichlorobenzene	0	0	0	0	0	2	0	0	0	0	3	3
1,3-Dichlorobenzene	0	0	0	0	0	0	0	0	0	0	0	0
1,4-Dichlorobenzene	0	0	0	0	0	0	0	0	0	0	0	0
Dichlorodifluoromethane	0	0	0	1	0	2	0	1	0	4	12	20
1,1-Dichloroethane	0	0	0	0	0	0	0	0	0	0	0	0
1,2-Dichloroethane	0	0	1	4	1	1	2	2	2	9	11	33
1,1-Dichloroethylene	1	0	0	2	1	1	1	1	3	10	16	36
cis-1,2-Dichloroethylene	0	0	1	1	0	0	0	0	1	4	7	14
trans-1,2-Dichloroethylene	1	0	0	3	0	1	0	3	0	4	12	24
Dichloromethane	0	0	0	2	0	0	0	2	0	4	5	13
1,2-Dichloropropane	1	1	3	3	1	3	1	1	2	7	17	40
1,3-Dichloropropene	0	0	0	0	0	0	0	0	0	2	4	6
Ethylbenzene	0	0	0	0	0	0	0	0	0	0	2	2
Methyl ethyl ketone(MEK	0	0	0	0	0	0	0	0	0	1	7	9
Styrene	0	0	0	0	0	0	0	0	0	0	0	0
1,1,2,2-Tetrachloroethane	0	0	0	0	0	0	0	0	0	0	0	0
Tetrachloroethylene(PCE	0	0	0	0	1	0	0	0	0	1	2	4
Toluene	0	1	2	3	6	2	3	3	4	7	30	61
1,1,1-Trichloroethane	1	0	1	1	2	0	0	1	0	4	8	18
1,1,2-Trichloroethane	0	0	0	1	0	0	0	0	0	0	0	1
Trichloroethylene (TCE)	0	0	0	1	0	1	0	0	1	0	0	3
Trichlorofluoromethane	1	0	3	3	5	4	2	4	4	10	44	80
Vinyl chloride	0	0	0	0	0	0	0	0	0	0	0	0
Xylene(s)	0	0	4	6	2	5	1	3	0	13	32	66
	1	0	1	0	0	0	1	0	0	2	6	11
Conductivity	0	0	0	0	0	1	0	0	0	0	0	1
Copper	0	0	0	1	0	0	0	0	0	0	0	1
DDD	0	0	0	0	0	1	0	0	0	0	0	1
Aldicarb	0	0	0	0	0	1	0	0	0	0	0	1
Baygon	0	0	0	0	0	1	0	0	0	0	0	1
Carbofuran	0	0	0	0	0	1	0	0	0	0	0	1
alpha-BHC	0	0	0	0	0	0	0	0	0	0	2	2
Heptachlor	0	0	0	0	0	0	0	0	0	0	1	1
Endrin	0	0	0	0	0	0	0	0	0	0	1	2
Bromodichloromethane	0	0	1	0	0	0	0	0	0	0	0	1
Ethion	0	0	1	0	0	0	0	0	0	0	0	1

TABLE XXI

CHEMICAL CONSTITUENTS EXCEEDING "BENEFICIAL USE" CRITERIA LIMIT COMPARED TO WASTE ACCEPTANCE RATE IN TONS PER DAY

	WASTE ACCEPTANCE RATE IN TONS PER DAY											
	0 TO 10	10 TO 20	20 TO 50	50 TO 100	100 TO 200	200 TO 300	300 TO 400	400 TO 500	500 TO 1000	1000 OR MORE	NO * DATA	TOTAL
SITES PER CATEGORY	9	8	17	16	11	8	8	6	11	25	151	270
GENERAL MINERALS	0	0	0	0	0	1	0	0	0	0	0	1
METALS	1	0	4	1	1	0	0	1	1	2	20	31
ORGANIC COMPOUNDS	3	2	11	11	10	8	4	5	7	20	98	179

NOTE: Some sites may be counted twice because they are leaking more than one type of constituent (e.g., general minerals and organics).

	WASTE ACCEPTANCE RATE IN TONS PER DAY											
	0 TO 10	10 TO 20	20 TO 50	50 TO 100	100 TO 200	200 TO 300	300 TO 400	400 TO 500	500 TO 1000	1000 OR MORE	NO * DATA	TOTAL
SITES PER CATEGORY	9	8	17	16	11	8	8	6	11	25	151	270
ANY CONSTITUENT	4	2	11	12	10	8	4	5	8	21	107	192
PERCENTAGE	44%	25%	65%	75%	91%	100%	50%	83%	73%	84%	71%	71%

TOTAL SITES CHECKED: 543

NOTE: DATA SCANNED ONLY FOR THE FOLLOWING REGULATORY LIMITS:

DHS PRIMARY MAXIMUM CONTAMINANT LEVEL
DHS SECONDARY MAXIMUM CONTAMINANT LEVEL
US EPA PRIMARY MAXIMUM CONTAMINANT LEVEL
US EPA SECONDARY MAXIMUM CONTAMINANT LEVEL
DHS ACTION LEVEL -- TOXICITY
PROP 65 REG. LEVEL AS A WATER QUALITY CRITERION

* "NO DATA" includes inactive or closed sites

CHEMICAL CONSTITUENTS EXCEEDING "BENEFICIAL USE" CRITERIA LIMITS COMPARED TO CLOSED SITES AND YEARS FROM LAST WASTE ACCEPTANCE

	CLOSED SITES AND YEARS FROM LAST WASTE ACCEPTANCE								
	CLOSED 5 YEARS OR LESS	CLOSED 5 TO 10 YEARS	CLOSED 10 TO 20 YEARS	CLOSED 20 TO 25 YEARS	CLOSED 25 TO 30 YEARS	CLOSED PAST 30 YEARS	CLOSED; NO CLOSURE DATE	NO DATA	TOTAL
SITES PER CATEGORY	5	8	18	16	10	8	24	55	144
pH	0	0	0	0	0	0	0	0	0
TOC	0	0	0	0	0	0	0	0	0
TDS	0	0	0	0	0	0	0	0	0
COD (Chem Oxy Demand)	0	0	0	0	0	0	0	0	0
Alkalinity	0	0	0	0	0	0	0	0	0
Ammonia (As N)	0	0	0	0	0	0	0	0	0
Bicarbonate (HCO3)	0	0	0	0	0	0	0	0	0
Calcium	0	0	0	0	0	0	0	0	0
Chloride	0	0	0	0	0	0	0	0	0
Iron	0	0	1	1	0	0	0	2	4
Magnesium	0	0	0	0	0	0	0	0	0
Manganese	0	1	0	2	0	1	0	2	6
Nitrate (As N)	0	0	0	0	0	0	0	0	0
Potassium	0	0	0	0	0	0	0	0	0
Sodium	0	0	0	0	0	0	0	0	0
Sulfate	0	0	0	0	0	0	0	0	0
Sulfides	0	0	0	0	0	0	0	0	0
Arsenic	0	0	1	0	0	0	0	1	2
Barium	0	0	0	0	0	0	0	0	0
Cadmium	0	0	0	0	0	0	0	0	0
Chromium (total)	0	0	0	0	1	0	0	0	1
Cyanide	0	0	0	0	0	0	0	0	0
Lead	0	2	0	0	1	0	0	4	7
Mercury (inorganic)	0	0	0	0	0	0	0	0	0
Selenium	0	0	0	0	0	0	0	0	0
Silver	0	0	0	0	0	0	0	0	0
Acetone	0	0	0	0	0	0	0	0	0
Benzene	1	1	4	4	0	2	4	23	39
Bromomethane	0	0	0	0	0	0	0	0	0
Bromoform	0	0	0	0	0	0	0	0	0
Carbon tetrachloride	0	0	0	0	0	0	0	1	1
Chlorobenzene	0	0	0	3	0	1	0	2	6
Chloroethane	0	0	0	0	0	0	0	1	1
Chloroform	0	0	1	0	0	0	1	3	5
Chloromethane	0	0	0	0	0	0	0	0	0
Dibromochloromethane	0	0	0	1	0	0	0	1	2
1,2-Dichlorobenzene	1	0	0	0	0	0	1	0	2
1,3-Dichlorobenzene	0	0	0	0	0	0	0	0	0
1,4-Dichlorobenzene	0	1	0	2	1	1	1	6	12
Dichlorodifluoromethane	0	0	0	0	0	0	0	0	0
1,1-Dichloroethane	1	1	2	1	0	1	2	5	13
1,2-Dichloroethane	1	2	3	2	2	0	4	6	20
1,1-Dichloroethylene	0	1	0	0	0	0	0	7	8
cis-1,2-Dichloroethylene	0	2	1	1	0	1	2	6	13
trans-1,2-Dichloroethylene	0	0	0	1	0	0	1	5	7
Dichloromethane	0	2	0	2	1	0	4	9	18
1,2-Dichloropropane	0	0	0	1	0	0	1	2	4
1,3-Dichloropropene	0	0	0	0	0	0	0	1	1
Ethylbenzene	0	0	0	1	0	1	0	5	7
Methyl ethyl ketone (MEK	0	0	0	0	0	0	0	0	0
Styrene	0	0	0	0	0	0	0	0	0
1,1,2,2-Tetrachloroethane	0	0	0	0	0	0	1	2	3
Tetrachloroethylene (PCE	1	2	5	3	3	0	5	12	31
Toluene	0	0	0	0	1	1	0	7	9
1,1,1-Trichloroethane	0	0	0	0	0	0	0	0	0
1,1,2-Trichloroethane	0	0	0	0	0	0	0	0	0
Trichloroethylene (TCE)	1	4	6	3	4	1	7	21	47
Trichlorofluoromethane	0	0	0	0	0	0	0	0	0
Vinyl chloride	1	2	0	6	2	3	4	18	36
Xylene(s)	0	0	1	0	0	1	0	5	7
Conductivity	0	0	0	0	0	0	0	0	0
Copper	0	0	0	0	0	1	0	0	1
DDD	0	0	0	0	0	0	0	0	0
Aldicarb	0	0	0	0	0	0	0	0	0
Baygon	0	0	0	0	0	0	0	0	0
Carbofuran	0	0	0	0	0	0	0	0	0
alpha-BHC	0	0	0	0	0	0	0	1	1
Heptachlor	0	0	0	0	0	0	0	2	2
Endrin	0	0	0	0	0	0	0	0	0
Bromodichloromethane	0	0	0	0	1	0	0	0	1
Ethion	0	0	0	0	0	0	0	0	0

TABLE XIII

CHEMICAL CONSTITUENTS EXCEEDING "BENEFICIAL USE" CRITERIA LIMITS COMPARED TO CLOSED SITES AND YEARS FROM LAST WASTE ACCEPTANCE

	CLOSED SITES AND YEARS FROM LAST WASTE ACCEPTANCE								
	CLOSED 5 YEARS OR LESS	CLOSED 5 TO 10 YEARS	CLOSED 10 TO 20 YEARS	CLOSED 20 TO 25 YEARS	CLOSED 25 TO 30 YEARS	CLOSED PAST 30 YEARS	CLOSED; NO CLOS-URE DATE	NO DATA	TOTAL
SITES PER CATEGORY	5	8	18	16	10	8	24	55	144
GENERAL MINERALS	0	0	0	0	0	0	0	0	0
METALS	0	2	2	3	2	1	0	7	17
ORGANIC COMPOUNDS	1	5	11	10	6	4	15	43	95

NOTE: Some sites may be counted twice because they are leaking more than one type of constituent (e.g., general minerals and organics).

	CLOSED SITES AND YEARS FROM LAST WASTE ACCEPTANCE								
	CLOSED 5 YEARS OR LESS	CLOSED 5 TO 10 YEARS	CLOSED 10 TO 20 YEARS	CLOSED 20 TO 25 YEARS	CLOSED 25 TO 30 YEARS	CLOSED PAST 30 YEARS	CLOSED; NO CLOS-URE DATE	NO DATA	TOTAL
SITES PER CATEGORY	5	8	18	16	10	8	24	55	144
ANY CONSTITUENT	1	6	12	12	8	5	15	44	103
PERCENTAGE	20%	75%	67%	75%	80%	63%	63%	80%	72%

TOTAL SITES CHECKED: 544

NOTE: DATA SCANNED ONLY FOR THE FOLLOWING REGULATORY LIMITS:

DHS PRIMARY MAXIMUM CONTAMINANT LEVEL
DHS SECONDARY MAXIMUM CONTAMINANT LEVEL
US EPA PRIMARY MAXIMUM CONTAMINANT LEVEL
US EPA SECONDARY MAXIMUM CONTAMINANT LEVEL
DHS ACTION LEVEL -- TOXICITY
PROP 65 REG. LEVEL AS A WATER QUALITY CRITERION

CHEMICAL CONSTITUENTS EXCEEDING "BENEFICIAL USE" CRITERIA LIMIT COMPARED TO FACILITY TYPE

	FACILITY TYPE								
	MUNICIPAL / DOMESTIC	INDUS-TRIAL	AGRICUL-TURAL	WASTE SITE CLASS I	WASTE SITE CLASS II	WASTE SITE CLASS III	OTHER	NO DATA	TOTAL
SITES PER CATEGORY	2	8	0	4	5	182	9	60	270
pH	0	0	0	0	0	0	0	0	0
TOC	0	0	0	0	0	0	0	0	0
TDS	0	0	0	0	0	0	0	0	0
COD(Chem Oxy Demand)	0	0	0	0	0	0	0	0	0
Alkalinity	0	0	0	0	0	0	0	0	0
Ammonia (As N)	0	0	0	0	0	0	0	0	0
Bicarbonate (HCO3)	0	0	0	0	0	0	0	0	0
Calcium	0	0	0	0	0	0	0	0	0
Chloride	0	0	0	0	0	0	0	0	0
Iron	0	1	0	0	0	6	0	1	8
Magnesium	0	0	0	0	0	0	0	0	0
Manganese	0	0	0	0	0	7	0	2	9
Nitrate (As N)	0	0	0	0	0	0	0	0	0
Potassium	0	0	0	0	0	0	0	0	0
Sodium	0	0	0	0	0	0	0	0	0
Sulfate	0	0	0	0	0	0	0	0	0
Sulfides	0	0	0	0	0	0	0	0	0
Arsenic	0	0	0	1	0	4	0	1	6
Barium	0	0	0	0	0	1	0	0	1
Cadmium	0	0	0	0	0	2	0	0	2
Chromium (total)	0	0	0	0	0	2	0	1	3
Cyanide	0	0	0	0	0	0	0	0	0
Lead	0	0	0	2	0	7	0	4	13
Mercury (inorganic)	0	0	0	0	0	0	0	0	0
Selenium	0	0	0	0	0	1	0	0	1
Silver	0	0	0	0	0	1	0	0	1
Acetone	0	0	0	0	0	0	0	0	0
Benzene	0	4	0	1	2	51	2	18	78
Bromomethane	0	0	0	0	0	0	0	0	0
Bromoform	0	0	0	0	0	0	0	0	0
Carbon tetrachloride	0	0	0	0	0	3	0	1	4
Chlorobenzene	0	1	0	0	0	2	1	5	9
Chloroethane	0	0	0	0	0	0	0	1	1
Chloroform	0	2	0	1	0	8	1	0	12
Chloromethane	0	0	0	0	0	0	0	0	0
Dibromochloromethane	0	0	0	0	1	3	0	0	4
1,2-Dichlorobenzene	0	1	0	0	0	2	0	0	3
1,3-Dichlorobenzene	0	0	0	0	0	0	0	0	0
1,4-Dichlorobenzene	0	1	0	0	1	13	0	5	20
Dichlorodifluoromethane	0	0	0	0	0	0	0	0	0
1,1-Dichloroethane	0	0	0	0	0	25	1	7	33
1,2-Dichloroethane	0	1	0	0	0	23	3	9	36
1,1-Dichloroethylene	0	0	0	0	0	11	1	2	14
-1,2-Dichloroethylene	0	2	0	0	0	15	0	7	24
-1,2-Dichloroethylene	0	0	0	0	1	8	0	4	13
Dichloromethane	1	0	0	1	2	30	0	6	40
1,2-Dichloropropane	0	0	0	0	0	4	1	1	6
1,3-Dichloropropene	0	0	0	0	0	1	1	0	2
Ethylbenzene	0	1	0	0	1	2	1	4	9
Methyl ethyl ketone(MEK	0	0	0	0	0	0	0	0	0
Styrene	0	0	0	0	0	0	0	0	0
1,1,2,2-Tetrachloroethane	0	0	0	0	0	3	0	1	4
Tetrachloroethylene(PCE	0	1	0	0	1	46	2	11	61
Toluene	0	1	0	1	1	13	0	2	18
1,1,1-Trichloroethane	0	0	0	0	0	1	0	0	1
1,1,2-Trichloroethane	0	0	0	0	0	3	0	0	3
Trichloroethylene (TCE)	0	2	0	0	3	51	2	22	80
Trichlorofluoromethane	0	0	0	0	0	0	0	0	0
Vinyl chloride	0	2	0	1	0	46	0	17	66
Xylene(s)	0	1	0	1	0	5	0	4	11
Conductivity	0	0	0	0	0	1	0	0	1
Copper	0	0	0	0	0	1	0	0	1
DDD	0	0	0	0	0	1	0	0	1
Aldicarb	0	0	0	0	0	1	0	0	1
Baygon	0	0	0	0	0	1	0	0	1
Carbofuran	0	0	0	0	0	1	0	0	1
alpha-BHC	0	0	0	0	0	0	1	0	1
Heptachlor	0	0	0	0	0	0	0	2	2
Endrin	0	0	0	0	0	0	0	1	1
Bromodichloromethane	0	0	0	0	0	1	1	0	2
Ethion	0	0	0	0	0	1	0	0	1

TABLE XIV

CHEMICAL CONSTITUENTS EXCEEDING "BENEFICIAL USE" CRITERIA LIMIT COMPARED TO FACILITY TYPE

	FACILITY TYPE								
	MUNICIPAL / DOMESTIC	INDUS-TRIAL	AGRICUL-TURAL	WASTE SITE CLASS I	WASTE SITE CLASS II	WASTE SITE CLASS III	OTHER	NO DATA	TOTAL
SITES PER CATEGORY	2	8	0	4	5	182	9	60	270
GENERAL MINERALS	0	0	0	0	0	1	0	0	1
METALS	0	1	0	3	0	19	0	8	31
ORGANIC COMPOUNDS	1	6	0	1	5	121	5	40	179

NOTE: Some sites may be counted twice because they are leaking more than one type of constituent (e.g., general minerals and organics).

	FACILITY TYPE								
	MUNICIPAL / DOMESTIC	INDUS-TRIAL	AGRICUL-TURAL	WASTE SITE CLASS I	WASTE SITE CLASS II	WASTE SITE CLASS III	OTHER	NO DATA	TOTAL
SITES PER CATEGORY	2	8	0	4	5	182	9	60	270
ANY CONSTITUENT	1	6	0	3	5	129	5	43	192
PERCENTAGE	50%	75%	****%	75%	100%	71%	56%	72%	71%

TOTAL SITES CHECKED: 544

NOTE: DATA SCANNED ONLY FOR THE FOLLOWING REGULATORY LIMITS:

DHS PRIMARY MAXIMUM CONTAMINANT LEVEL
DHS SECONDARY MAXIMUM CONTAMINANT LEVEL
US EPA PRIMARY MAXIMUM CONTAMINANT LEVEL
US EPA SECONDARY MAXIMUM CONTAMINANT LEVEL
DHS ACTION LEVEL -- TOXICITY
PROP 65 REG. LEVEL AS A WATER QUALITY CRITERION

APPENDIX

SWAT LEGISLATION

SWAT LEGISLATION

§13273.

(a) The state board shall, on or before January 1, 1986, rank all solid waste disposal sites, as defined in Section 66714.1 of the Government Code, based upon the threat which they may pose to water quality. On or before July 1, 1987, the operators of the first 150 solid waste disposal sites ranked on the list shall submit a solid waste water quality assessment test to the appropriate regional board for its examination pursuant to subdivision (d). On or before July 1 of each succeeding year, the operators of the next 150 solid waste disposal sites ranked on the list shall submit a solid waste water quality assessment test to the appropriate regional board for its examination pursuant to subdivision (d).

(b) Before a solid waste water quality assessment test report may be submitted to the regional board, a registered geologist, registered pursuant to Section 7850 of the Business and Professions Code, a certified engineering geologist, certified pursuant to Section 7842 of the Business and Professions Code, or a civil engineer registered pursuant to Section 6762 of the Business and Professions Code, who has at least five years' experience in groundwater hydrology, shall certify that the report contains all of the following information and any other information which the state board may, by regulation, require:

(1) An analysis of the surface and groundwater on, under, and within one mile of the solid waste disposal site to provide a reliable indication whether there is any leakage of hazardous waste.

(2) A chemical characterization of the soil-pore liquid in those areas which are likely to be affected if the solid waste disposal site is leaking, as compared to geologically similar areas near the solid waste disposal site which have not been affected by leakage or waste discharge.

(c) If the regional board determines that the information specified in paragraph (1) or (2) is not needed because other information demonstrates that hazardous wastes are migrating into the water, the regional board may waive the requirement to submit this information specified in paragraphs (1) and (2) of subdivision (b). The regional board shall also notify the Department of Toxic Substances Control, and shall take appropriate remedial action pursuant to Chapter 5 (commencing with Section 13300).

Copyright 1996 The Bureau of National Affairs, Inc.

(d) The regional board shall examine the report submitted pursuant to subdivision (b) and determine whether the number, location, and design of the wells and the soiling testing could detect any leachate buildup, leachate migration, or hazardous waste migration. If the regional board determines that the monitoring program could detect the leachate and hazardous waste, the regional board shall take the action specified in subdivision (e). If the regional board determines that the monitoring program was inadequate, the regional board shall require the solid waste disposal site to correct the monitoring program and resubmit the solid waste assessment test based upon the results from the corrected monitoring program.

(e) The regional board shall examine the approved solid waste assessment test report and determine whether any hazardous waste migrated into the water. If the regional board determines that hazardous waste has migrated into the water, it shall notify the Department of Toxic Substances Control and the California Toxic Substances Control and the California Integrated Waste Management Board and shall take appropriate remedial action pursuant to Chapter 5 (commencing with Section 13300).

(f) When a regional board revises the waste discharge requirements for a solid waste disposal site, the regional board shall consider the information provided in the solid waste assessment test report and any other relevant site-specific engineering data provided by the site operator for that solid waste disposal site as part of a report of waste discharge.

>

§13273.1.

(a) Except as provided in subdivision (b), an operator of a solid waste disposal site may submit a solid waste assessment questionnaire to the appropriate regional board at least 24 months prior to the site's solid waste water quality assessment test due date as established pursuant to Section 13273. The regional board shall require the operator to submit any additional information, as needed, or require onsite verification of the solid waste assessment questionnaire data in order to render a decision pursuant to subdivision (c).

(b) Any solid waste disposal site which is larger than 50,000 cubic yards or is known or suspected to contain hazardous substances, other than household hazardous wastes, shall be prohibited from submitting a solid waste assessment questionnaire under this section.

Copyright 1996 The Bureau of National Affairs, Inc.

(c) The regional board shall complete a thorough analysis of each solid waste assessment questionnaire submitted pursuant to this section by a date 18 months prior to the solid waste assessment test due date. Based upon this analysis, the regional board shall determine whether or not the site has discharged hazardous substances which will impact the beneficial uses of water. If the regional board determines that the site has not so discharged hazardous substances, the regional board shall notify the operator that the operator is not required to prepare a solid waste water quality assessment test pursuant to Section 13273.

(d) If the regional board does not make the determination specified in subdivision (c), the operator shall submit all, or a portion of, a solid waste water quality assessment test. The regional board shall notify the operator of this determination and indicate if all, or what portion of, a solid waste water quality assessment test shall be required. The operator shall submit the solid waste water quality assessment test, or a portion thereof, by the date established pursuant to Section 13273.

(e) The state board shall develop a solid waste assessment questionnaire and guidelines for submittal no later than three months after the effective date of this statute adding this section. The questionnaire shall contain, but not be limited to, a characterization of the wastes, size of the site, age of the site, and other appropriate factors.

(f) Those operators of solid waste disposal sites listed by the state board pursuant to Section 13273 in Rank 3 and seeking an exemption under this section shall submit their solid waste assessment questionnaire no later than July 1, 1988. If the regional board does not make the determination specified in subdivision (c), the regional board shall require the operator to submit all, or a portion of, a solid waste water quality assessment test by July 1, 1990.

>

§13273.2.

Notwithstanding subdivision (b) of Section 13273.1, a regional board may reevaluate the status of any solid waste disposal site ranked pursuant to Section 13273, including those sites exempted pursuant to Section 13273.1, and may require the operator to submit or revise a solid waste water quality assessment test after July 1, 1989. The regional board shall give written notification to the operator that a solid waste assessment test is require and the due date. This section shall not require submittal of a solid waste water quality assessment test by a

Copyright 1996 The Bureau of National Affairs, Inc.

date earlier than established in accordance with Section 13273.

>
§13273.3.
As used in Sections 13273, 13273.1, and 13273.2, "operator" means a person who operates or manages, or who has operated or managed, the solid waste disposal site. If the operator of the solid waste disposal site no longer exists, or is unable, as determined by the regional board, to comply with the requirements of Section 13273, 13273.1, or 13273.2, "operator" means any person who owns or who has owned the solid waste disposal site.

>
§13273.5.
Notwithstanding Section 13273, a small city which operates a Class III solid waste disposal site is not required to submit a solid waste water quality assessment test report pursuant to Section 13273 if the city has a population of less than 20,000 persons, the solid waste disposal site receives less than 20,000 tons of waste per year, the water table of the highest aquifer under the disposal site is 250 or more feet below the base of the disposal site and the water in the highest aquifer is not potable, and the site receives less than an average of 12 inches of rainfall per year.

This section applies only if the disposal site is operational and has been granted all required permits as of January 1, 1991, if the site is located in Kings County, and if the city has completed an initial solid waste water quality assessment test and a solid waste air quality assessment test which establish that no significant air or water contamination has occurred, and, in that event, the city shall be exempted from conducting further assessment tests for seven years, or any longer time specified by the regional board, after the date of the initial assessment tests.

Copyright 1996 The Bureau of National Affairs, Inc.

STATE WATER RESOURCES CONTROL BOARD

P.O. BOX 100, Sacramento, CA 95812-0100

Legislative and Public Affairs: (916) 657-1247
Water Quality Information: (916) 657-0687

Clean Water Programs Information: (916) 227-4400
Water Rights Information: (916) 657-2170

CALIFORNIA REGIONAL WATER QUALITY CONTROL BOARDS

NORTH COAST REGION (1)
5550 Skylane Blvd., Ste. A
Santa Rosa, CA 95403
(707) 576-2220

SAN FRANCISCO BAY REGION (2)
2101Webster Street, Ste. 500
Oakland, CA 94612
(510) 286-1255

CENTRAL COAST REGION (3)
81 Higuera Street, Ste. 200
San Luis Obispo, CA 93401-5427
(805) 549-3147

LOS ANGELES REGION (4)
101 Centre Plaza Drive
Monterey Park, CA 91754-2156
(213) 266-7500

CENTRAL VALLEY REGION (5)
3443 Routier Road
Sacramento, CA 95827-3098
(916) 255-3000

FRESNO BRANCH OFFICE
3614 East Ashlan Avenue
Fresno, CA 93726
(209) 445-5116

REDDING BRANCH OFFICE
415 Knollcrest Drive
Redding, CA 96002
(916) 224-4845

LAHONTAN REGION (6)
2092 South Lake Tahoe Blvd.
South Lake Tahoe, CA 96150
(916) 542-5400

VICTORVILLE BRANCH OFFICE
15428 Civic Drive, Ste. 100
Victorville, CA 92392-2383
(619) 241-6583

COLORADO RIVER BASIN REGION (7)
73-720 Fred Waring Dr. Ste. 100
Palm Desert, CA 92260
(619) 346-7491

SANTA ANA REGION (8)
California Tower
3737 Main Street
Riverside, CA 92501
(909) 782-4130

SAN DIEGO REGION (9)
9771 Clairemont Mesa Blvd., Ste. B
San Diego, CA 92124
(619) 467-2952

STATE OF CALIFORNIA
Pete Wilson, Governor

CALIFORNIA ENVIRONMENTAL PROTECTION AGENCY
James M. Strock, Secretary

STATE WATER RESOURCES CONTROL BOARD
John P. Caffrey, Chair

11/95