CALIFORNIA REGIONAL WATER QUALITY CONTROL BOARD

REGION 4, LOS ANGELES REGION

320 W. 4th Street, Suite 200, Los Angeles, California 90013
(213) 576-6600 • Fax (213) 576-6640
http://www.waterboards.ca.gov

ORDER NO. R4-2008-XXXX
NPDES NO. CA0055221

WASTE DISCHARGE REQUIREMENTS FOR THE CITY OF SIMI VALLEY SIMI VALLEY WATER QUALITY CONTROL PLANT

REVISED TENTATIVE

The following Discharger is subject to waste discharge requirements as set forth in this Order:

Table 1. Discharger Information

Discharger	**City of Simi Valley**
Name of Facility	**Simi Valley Water Quality Control Plant**
Facility Address	**600 West Los Angeles Avenue**
	Simi Valley, CA 93065
	Ventura County
The U.S. Environmental Protection Agency (USEPA) and the Regional Water Quality Control Board have classified this discharge as a **major** discharge.	

The discharge by the City of Simi Valley from the discharge points identified below is subject to waste discharge requirements as set forth in this Order:

Table 2. Discharge Location

Discharge Point	Effluent Description	Discharge Point Latitude	Discharge Point Longitude	Receiving Water
001	Tertiary treated wastewater	34º, 16', 56" N	118º, 48', 44" W	Arroyo Simi
002	Tertiary treated wastewater	34º, 16', 56" N	118º, 48', 46" W	Arroyo Simi

Table 3. Administrative Information

This Order was adopted by the Regional Water Quality Control Board on:	**~~June 5~~September 11, 2008**
This Order shall become effective on:	**~~July 25~~October 31, 2008**
This Order shall expire on:	**~~May 10~~August 10, 2013**
The Discharger shall file a Report of Waste Discharge in accordance with title 23, California Code of Regulations, as application for issuance of new waste discharge requirements no later than:	**180 days prior to the Order expiration date** (Title 40, Code of Federal Regulations, part 122.21(d))

IT IS HEREBY ORDERED, that this Order supercedes Order No. R4-2003-0081 except for enforcement purposes, and, in order to meet the provisions contained in division 7 of the California Water Code (commencing with section 13000) and regulations adopted thereunder, and the provisions of the federal Clean Water Act and regulations and guidelines adopted thereunder, the Discharger shall comply with the requirements in this Order.

I, Tracy J. Egoscue, Executive Officer, do hereby certify that this Order with all attachments is a full, true, and correct copy of an Order adopted by the California Regional Water Quality Control Board, Los Angeles Region, on ~~June 5~~September 11, 2008.

_____

Tracy J. Egoscue, Executive Officer

REVISED TENTATIVE

Table of Contents

I. Facility Information 5
II. Findings 6
III. Discharge Prohibitions 16
IV. Effluent Limitations and Discharge Specifications 17
A. Effluent Limitations – Discharge Points 001 and 002 17
1. Effluent Limitations Applicable to Discharge Points 001 and 002 17
2. Other Effluent Limitations Applicable to Discharge Points 001 and 002 21
3. Interim Effluent Limitations 23
B. Reclamation Specifications – Discharge Points 001 and 002 25
V. Receiving Water Limitations 26
A. Surface Water Limitations 26
B. Groundwater Limitations 28
VI. Provisions 29
A. Standard Provisions 29
B. Monitoring and Reporting Program (MRP) Requirements 32
C. Special Provisions 32
1. Reopener Provisions 32
2. Special Studies, Technical Reports and Additional Monitoring Requirements 33
3. Best Management Practices and Pollution Prevention 35
4. Construction, Operation and Maintenance Specifications 37
5. Special Provisions for Municipal Facilities (POTWs Only) 37
6. Other Special Provisions 39
7. Compliance Schedules 42
8. TMDL-related Tasks 42
VII. Compliance Determination 42

List of Tables

Table 1. Discharger Information 1
Table 2. Discharge Location 1
Table 3. Administrative Information 1
Table 4. Facility Information 5
Table 5a. Basin Plan Beneficial Uses – Surface Waters 8
Table 5b. Basin Plan Beneficial Uses – Ground Waters 10
Table 6. Effluent Limitations Applicable to Discharge Points 001 and 002 17
Table 7. Interim Effluent Limitations 24

List of Attachments

Attachment A – Definitions A-1
Attachment B – Map B-1
Attachment C – Flow Schematic..... C-1
Attachment D –Standard Provisions D-1
Attachment E – Monitoring and Reporting Program E-1
Attachment F – Fact Sheet F-1
Attachment G - Generic Toxicity Reduction Evaluation (TRE) Workplan…….....G-1
Attachment H – SWPPP Requirements..……..H-1
Attachment I - Biosolids/sludge Use and Disposal Requirements…...…… I-1
Attachment J – Pretreatment Requirements…… J-1
Attachment K – TMDL Tasks…… K-1

I. FACILITY INFORMATION

The following Discharger is subject to waste discharge requirements as set forth in this Order:

Table 4. Facility Information

Discharger	City of Simi Valley
Name of Facility	Simi Valley Water Quality Control Plant
Facility Address	600 West Los Angeles Avenue
	Simi Valley, CA 93065
	Ventura County
FACILITY CONTACT, TITLE, AND PHONE	James F. Langley, Deputy Director/Sanitation Services (805) 583-6443
MAILING ADDRESS	2929 Tapo Canyon Road, Simi Valley, CA 93063
Type of Facility	Publicly-Owned Treatment Works
Facility Design Flow	12.5 million gallons per day

II. FINDINGS

The California Regional Water Quality Control Board, Los Angeles Region (hereinafter Regional Water Board), finds:

A. Background. The City of Simi Valley (hereinafter Discharger) is currently discharging pursuant to Order No. R4-2003-0081 and National Pollutant Discharge Elimination System (NPDES) Permit No. CA0055221. The Discharger submitted a Report of Waste Discharge, dated December 6, 2007**,** and applied for an NPDES permit renewal to discharge up to 12.5 million gallons per day (mgd) of treated wastewater from Simi Valley Water Quality Control Plant (SVWQCP) hereinafter Facility. The application was deemed complete on February 27, 2008.

For the purposes of this Order, references to the "discharger" or "permittee" in applicable federal and state laws, regulations, plans, or policy are held to be equivalent to references to the Discharger herein.

B. Facility Description. The Discharger owns and operates Publicly-Owned Treatment Works (POTW). The treatment system consists of primary sedimentation, activated sludge biological treatment with nitrification and denitrification, secondary sedimentation, dual media filtration, chlorination, and dechlorination. Wastewater is discharged from Discharge Points 001 and 002 (see Table on cover page) to Arroyo Simi, a water of the United States, within Calleguas Creek Watershed. Attachment B provides a map of the area around the facility. Attachment C provides a flow schematic of the facility.

C. Legal Authorities. This Order is issued pursuant to section 402 of the federal Clean Water Act (CWA) and implementing regulations adopted by the U.S. Environmental Protection Agency (USEPA) and chapter 5.5, division 7 of the California Water Code (commencing with section 13370). It shall serve as an NPDES permit for point source discharges from this facility to surface waters. This Order also serves as Waste Discharge Requirements (WDRs) pursuant to article 4, chapter 4, division 7 of the California Water Code (commencing with section 13260).

D. Background and Rationale for Requirements. The Regional Water Board developed the requirements in this Order based on information submitted as part of the application, through monitoring and reporting programs, and other available information. The Fact Sheet (Attachment F), which contains background information and rationale for Order requirements, is hereby incorporated into this Order and constitutes part of the Findings for this Order. Attachments A through J are also incorporated into this Order.

E. California Environmental Quality Act (CEQA). Under California Water Code section 13389, this action to adopt an NPDES permit is exempt from the provisions of CEQA, Public Resources Code sections 21100-21177.

F. Technology-based Effluent Limitations. Section 301(b) of the CWA and implementing USEPA permit regulations at part 122.44, title 40 of the Code of Federal

Regulations[1], require that permits include conditions meeting applicable technology-based requirements at a minimum, and any more stringent effluent limitations necessary to meet applicable water quality standards. The discharge authorized by this Order must meet minimum federal technology-based requirements based on Secondary Treatment Standards at Part 133 and Best Professional Judgment (BPJ) in accordance with part 125.3. A detailed discussion of the technology-based effluent limitations development is included in the Fact Sheet (Attachment F).

G. Water Quality-Based Effluent Limitations. Section 301(b) of the CWA and part 122.44(d) require that permits include limitations more stringent than applicable federal technology-based requirements where necessary to achieve applicable water quality standards. This Order contains requirements, expressed as a technology equivalence requirement, more stringent than secondary treatment requirements that are necessary to meet applicable water quality standards. The rationale for these requirements, which consist of tertiary treatment or equivalent requirements or other provisions, is discussed in Section IV.C.2. of the Fact Sheet.

Part 122.44(d)(1)(i) mandates that permits include effluent limitations for all pollutants that are or may be discharged at levels that have the reasonable potential to cause or contribute to an exceedance of a water quality standard, including numeric and narrative objectives within a standard. Where reasonable potential has been established for a pollutant, but there is no numeric criterion or objective for the pollutant, water quality-based effluent limitations (WQBELs) must be established using: (1) USEPA criteria guidance under CWA section 304(a), supplemented where necessary by other relevant information; (2) an indicator parameter for the pollutant of concern; or (3) a calculated numeric water quality criterion, such as a proposed state criterion or policy interpreting the state's narrative criterion, supplemented with other relevant information, as provided in part 122.44(d)(1)(vi).

H. Water Quality Control Plans. The Regional Water Board adopted a Water Quality Control Plan for the Los Angeles Region (hereinafter Basin Plan) on June 13, 1994, that designates beneficial uses, establishes water quality objectives, and contains implementation programs and policies to achieve those objectives for all waters addressed through the plan. In addition, the Basin Plan implements State Water Resources Control Board (State Water Board) Resolution No. 88-63, which established state policy that all waters, with certain exceptions, should be considered suitable or potentially suitable for municipal or domestic supply. Beneficial uses applicable to Arroyo Simi and Calleguas Creek are as follows:

[1] All further statutory references are to title 40 of the Code of Federal Regulations unless otherwise indicated.

Table 5a. Basin Plan Beneficial Uses – Surface Waters

Discharge Point	Receiving Water Name	Beneficial Use(s)
001, 002	Arroyo Simi (Hydro. Unit No. 403.62)	Existing: Wildlife habitat (WILD), and rare, threatened, or endangered species (RARE) Intermittent: Industrial service supply (IND), ground water recharge (GWR), freshwater replenishment (FRSH), water contact recreation (REC-1), non-contact water recreation (REC-2), and warm freshwater habitat (WARM) Potential: Municipal and domestic water supply (MUN[2]).
001, 002	Arroyo Las Posas (Hydro. Unit No. 403.62)	Existing: Ground water recharge (GWR), freshwater replenishment (FRSH), water contact recreation (REC-1), non-contact water recreation (REC-2), warm freshwater habitat (WARM), and wildlife habitat (WILD). Intermittent: none Potential: Municipal and domestic water supply (MUN[2]), industrial service supply (IND), industrial process supply (PROC), agricultural supply (AGR), and cold freshwater habitat (COLD).
001, 002	Arroyo Las Posas (Hydro. Unit No. 403.12)	Existing: Ground water recharge (GWR), water contact recreation (REC-1), non-contact water recreation (REC-2), warm freshwater habitat (WARM), and wildlife habitat (WILD). Intermittent: none Potential: Municipal and domestic water supply (MUN[2]), industrial service supply (IND), industrial process supply (PROC), agricultural supply (AGR), and cold freshwater habitat (COLD).

[2] The potential municipal and domestic supply (p*MUN) beneficial use for the water body is consistent with the State Water Resources Control Board Resolution 88-63 and Regional Water Board Resolution No. 89-003; however, the Regional Water Board has only conditionally designated the MUN beneficial use of the surface water and at this time cannot establish effluent limitation designed to protect the conditional designation.

Discharge Point	Receiving Water Name	Beneficial Use(s)
001, 002	Calleguas Creek (Hydro. Unit No. 403.12)	Existing: Industrial service supply (IND), industrial process supply (PROC), agricultural supply (AGR), ground water recharge (GWR), water contact recreation (REC-1[3]), non-contact water recreation (REC-2), warm freshwater habitat (WARM), and wildlife habitat (WILD). Intermittent: none Potential: Municipal and domestic water supply (MUN[2])
001,002	Calleguas Creek (Hydro. Unit No. 403.11)	Existing: Agricultural supply (AGR), ground water recharge (GWR), freshwater replenishment (FRSH), water contact recreation (REC-1), non-contact water recreation (REC-2), warm freshwater habitat (WARM), cold freshwater habitat (COLD), wildlife habitat (WILD), rare, threatened, or endangered species (RARE[4]), and wetland habitat (WET). Intermittent: none Potential: Municipal and domestic water supply (MUN[2])
001, 002	Calleguas Creek Estuary (Hydro. Unit No. 403.11)	Existing: Non-contact water recreation (REC-2), commercial and sport fishing (COMM), estuarine habitat (EST), wildlife habitat (WILD), rare, threatened, or endangered species (RARE[4,5]), migration of aquatic organisms (MIGR[6]), spawning, reproduction, and/or early development (SPWN[6]), and wetland habitat (WET). Intermittent: none Potential: Navigation (NAV), and water contact recreation (REC-1[7]).

[3] Whenever flow conditions are suitable.
[4] Habitat of the Clapper Rail.
[5] One or more rare species utilize all ocean, bays, estuaries, and coastal wetlands for foraging and/or nesting.
[6] Aquatic organisms utilize all bays, estuaries, lagoons and coastal wetlands, to a certain extent, for spawning and early development. This may include migration into areas which are heavily influenced by freshwater inputs.
[7] Area is currently under the control of the Navy: swimming is prohibited.

Discharge Point	Receiving Water Name	Beneficial Use(s)
001, 002	Mugu Lagoon (Hydro. Unit No. 403.11)	Existing: Navigation (NAV), non-contact water recreation (REC-2), commercial and sport fishing (COMM[8]), estuarine habitat (EST), marine habitat (MAR), wildlife habitat (WILD[9]), preservation of biological habitats (BIOL), rare, threatened, or endangered species (RARE[4,5]), migration of aquatic organisms (MIGR[6]), spawning, reproduction, and/or early development (SPWN[6]), shellfish harvesting (SHELL[8]), wetland habitat (WET). Intermittent: None Potential: Water contact recreation (REC-1[7])

Beneficial uses of the receiving ground waters are as follows:

Table 5b. Basin Plan Beneficial Uses – Ground Waters

Discharge Point	Basin Name	Beneficial Use(s)
001, 002	Simi Valley Basin DWR Basin No. 4-9 Confined Aquifers	Existing: Municipal and domestic water supply (MUN), industrial service supply (IND), industrial process supply (PROC), and agricultural supply (AGR)
	Simi Valley Basin DWR Basin No. 4-9 Unconfined Aquifers	Existing: Municipal and domestic water supply (MUN), industrial service supply (IND), industrial process supply (PROC), and agricultural supply (AGR)
001, 002	Las Posas Valley DWR Basin No. 4-8 South Basin	Existing: Municipal and domestic water supply (MUN), industrial service supply (IND), industrial process supply (PROC), and agricultural supply (AGR)
	Las Posas Valley DWR Basin No. 4-8 North Basin	Existing: Municipal and domestic water supply (MUN), industrial service supply (IND), industrial process supply (PROC), and agricultural supply (AGR)
001, 002	Pleasant Valley (Ventura Central Basin) DWR Basin No. 4-6 Confined Aquifers	Existing: Municipal and domestic water supply (MUN), industrial service supply (IND), industrial process supply (PROC), and agricultural supply (AGR)

[8] Limited public access precludes full utilization.
[9] Marine habitats of the Channel Islands and Mugu Lagoon serve as pinniped haul-out areas for one or more species (i.e., sea lions).

Discharge Point	Basin Name	Beneficial Use(s)
	Pleasant Valley (Ventura Central Basin) DWR Basin No. 4-6 Unconfined Aquifers	Existing: Industrial service supply (IND), industrial process supply (PROC), and agricultural supply (AGR) Potential: Municipal and domestic water supply (MUN)
001, 002	Oxnard Plain (Ventura Central Basin) DWR Basin No. 4-4 Oxnard Forebay	Existing: Municipal and domestic water supply (MUN), industrial service supply (IND), industrial process supply (PROC), and agricultural supply (AGR)
	Oxnard Plain (Ventura Central Basin) DWR Basin No. 4-4 Confined Aquifers	Existing: Municipal and domestic water supply (MUN), industrial process supply (PROC), and agricultural supply (AGR)
	Oxnard Plain (Ventura Central Basin) DWR Basin No. 4-4 Unconfined Aquifers	Existing: Municipal and domestic water supply (MUN) and agricultural supply (AGR) Potential: Industrial service supply (IND)

Requirements of this Order implement the Basin Plan and subsequent amendments.

On October 25, 2006, the State Water Board adopted a revised 303(d) list. The 2006 303(d) list was partially approved by the USEPA on November 30, 2006. However, on March 8, 2007, USEPA partially disapproved the State's 303(d) list, by disapproving the State's omission of impaired waters that met federal listing regulations or guidance. USEPA is adding 64 waters and 37 associated pollutants to the State's 303(d) list. On June 28, 2007, USEPA transmitted the final approved 2004-2006 Section 303(d) List, which serves as the State's most recent list of impaired waterbodies. The list (hereinafter referred to as the 303(d) List) was prepared in accordance with Section 303(d) of the Federal Clean Water Act to identify specific impaired waterbodies where water quality standards are not expected to be met after implementation of technology-based effluent limitations on point sources.

Calleguas Creek and its tributaries are on the 303(d) List for the following pollutants/ stressors, from point and non-point sources:

Calleguas Creek Reach 7 (was Arroyo Simi Reaches 1 and 2 on 1998 303(d) List) --Hydrologic unit 403.67
Boron, chloride, fecal coliform, sulfates, total dissolved solids

Calleguas Creek Reach 6 (was Arroyo Las Posas Reaches 1 and 2 on 1998 303(d) List) --Hydrologic unit 403.62
Chloride, fecal coliform, sulfates, total dissolved solids

Calleguas Creek Reach 3 (Potrero Road upstream to confluence with Conejo Creek on 1998 303(d) List) --Hydrologic unit 403.12
Chlordane, chloride, total dissolved solids

Calleguas Creek Reach 2 (Estuary to Potrero Road - was Calleguas Creek Reaches 1 and 2 on 1998 303(d) List) --Hydrologic unit 403.12
Dissolved copper, fecal coliform

Calleguas Creek Reach 1 (was Mugu Lagoon on 1998 303(d) List) --Hydrologic unit 403.11
Copper, mercury, nickel, sedimentation/siltation

I. **National Toxics Rule (NTR) and California Toxics Rule (CTR).** USEPA adopted the NTR on December 22, 1992, and later amended it on May 4, 1995 and November 9, 1999. About forty criteria in the NTR applied in California. On May 18, 2000, USEPA adopted the CTR. The CTR promulgated new toxics criteria for California and, in addition, incorporated the previously adopted NTR criteria that were applicable in the state. The CTR was amended on February 13, 2001. These rules contain water quality criteria for priority pollutants.

J. **State Implementation Policy.** On March 2, 2000, the State Water Board adopted the *Policy for Implementation of Toxics Standards for Inland Surface Waters, Enclosed Bays, and Estuaries of California* (State Implementation Policy or SIP). The SIP became effective on April 28, 2000 with respect to the priority pollutant criteria promulgated for California by the USEPA through the NTR and to the priority pollutant objectives established by the Regional Water Board in the Basin Plan. The SIP became effective on May 18, 2000 with respect to the priority pollutant criteria promulgated by the USEPA through the CTR. The State Water Board adopted amendments to the SIP on February 24, 2005 that became effective on July 13, 2005. The SIP establishes implementation provisions for priority pollutant criteria and objectives and provisions for chronic toxicity control. Requirements of this Order implement the SIP.

K. **Compliance Schedules and Interim Requirements.** Section 2.1 of the SIP provides that, based on a Discharger's request and demonstration that it is infeasible for an existing Discharger to achieve immediate compliance with an effluent limitation derived from a CTR criterion, compliance schedules may be allowed in an NPDES permit. Unless an exception has been granted under section 5.3 of the SIP, a compliance schedule may not exceed 5 years from the date that the permit is issued or reissued, nor may it extend beyond 10 years from the effective date of the SIP (or May 17, 2010) to establish and comply with CTR criterion-based effluent limitations. Where a compliance schedule for a final effluent limitation exceeds 1 year, the Order must include interim numeric limitations for that constituent or parameter. Where allowed by the Basin Plan, compliance schedules and interim effluent limitations or discharge specifications may also be granted to allow time to implement a new or revised water quality objective. This Order does include TMDL-based compliance schedules and

interim effluent limitations. A detailed discussion of the basis for the compliance schedules and interim effluent limitations is included in the Fact Sheet.

L. Alaska Rule. On March 30, 2000, USEPA revised its regulation that specifies when new and revised state and tribal water quality standards (WQS) become effective for CWA purposes. (40 C.F.R. § 131.21; 65 Fed. Reg. 24641 (April 27, 2000).) Under the revised regulation (also known as the Alaska rule), new and revised standards submitted to USEPA after May 30, 2000, must be approved by USEPA before being used for CWA purposes. The final rule also provides that standards already in effect and submitted to USEPA by May 30, 2000 may be used for CWA purposes, whether or not approved by USEPA.

M. Stringency of Requirements for Individual Pollutants. This Order contains both technology-based and water quality-based effluent limitations for individual pollutants. The technology-based effluent limitations consist of restrictions on BOD, TSS, pH, and percent removal of BOD and TSS. Restrictions on BOD, TSS and pH are discussed in Section IV.B. of the Fact Sheet. This Order's technology-based pollutant restrictions implement the minimum, applicable federal technology-based requirements.

Water quality-based effluent limitations have been scientifically derived to implement water quality objectives that protect beneficial uses. Both the beneficial uses and the water quality objectives have been approved pursuant to federal law and are the applicable federal water quality standards. To the extent that toxic pollutant water quality-based effluent limitations were derived from the CTR, the CTR is the applicable standard pursuant to part 131.38. The scientific procedures for calculating the individual water quality-based effluent limitations for priority pollutants are based on the CTR-SIP, which was approved by USEPA on May 18, 2000. Most beneficial uses and water quality objectives contained in the Basin Plan were approved under state law and submitted to and approved by USEPA prior to May 30, 2000. Any water quality objectives and beneficial uses submitted to USEPA prior to May 30, 2000, but not approved by USEPA before that date, are nonetheless "applicable water quality standards for purposes of the CWA" pursuant to 40 C.F.R. part 131.21(c)(1).

This Order contains pollutant restrictions that are more stringent than applicable federal requirements and standards. Specifically, this Order includes effluent limitations for BOD and TSS that are more stringent than applicable federal standards, but that are nonetheless necessary to meet numeric objectives or protect beneficial uses. The rationale for including these limitations is explained in Section IV.B. of the Fact Sheet.

N. Antidegradation Policy. Part 131.12 requires that the state water quality standards include an antidegradation policy consistent with the federal policy. The State Water Board established California's antidegradation policy in State Water Board Resolution No. 68-16. Resolution No. 68-16 incorporates the federal antidegradation policy which requires that existing quality of waters be maintained unless degradation is justified based on specific findings. The Regional Water Board's Basin Plan implements, and incorporates by reference, both the state and federal antidegradation policies. As

discussed in detail in the Fact Sheet the permitted discharge is consistent with the antidegradation provision of part 131.12 and State Water Board Resolution No. 68-16.

O. Anti-Backsliding Requirements. Sections 402(o)(2) and 303(d)(4) of the CWA and federal regulations at title 40, Code of Federal Regulations part 122.44(l) prohibit backsliding in NPDES permits. These anti-backsliding provisions require effluent limitations in a reissued permit to be as stringent as those in the previous permit, with some exceptions where limitations may be relaxed. Some effluent limitations in this Order are less stringent that those in the previous Order. As discussed in detail in the Fact Sheet this relaxation of effluent limitations is consistent with the anti-backsliding requirements of the CWA and federal regulations.

P. Endangered Species Act. This Order does not authorize any act that results in the taking of a threatened or endangered species or any act that is now prohibited, or becomes prohibited in the future, under either the California Endangered Species Act (Fish and Game Code sections 2050 to 2097) or the Federal Endangered Species Act (16 U.S.C.A. sections 1531 to 1544). This Order requires compliance with effluent limits, receiving water limits, and other requirements to protect the beneficial uses of waters of the state. The discharger is responsible for meeting all requirements of the applicable Endangered Species Act.

Q. Monitoring and Reporting. Part 122.48 requires that all NPDES permits specify requirements for recording and reporting monitoring results. California Water Code sections 13267 and 13383 authorizes the Regional Water Board to require technical and monitoring reports. The Monitoring and Reporting Program establishes monitoring and reporting requirements to implement federal and State requirements. This Monitoring and Reporting Program is provided in Attachment E.

R. Standard and Special Provisions. Standard Provisions, which apply to all NPDES permits in accordance with part 122.41, and additional conditions applicable to specified categories of permits in accordance with part 122.42, are provided in Attachment D. The discharger must comply with all standard provisions and with those additional conditions that are applicable under part 122.42. The Regional Water Board has also included in this Order special provisions applicable to the Discharger. A rationale for the special provisions contained in this Order is provided in the attached Fact Sheet.

S. Provisions and Requirements Implementing State Law. The provisions/requirements in subsections VI.C. of this Order are included to implement state law only. These provisions/requirements are not required or authorized under the federal CWA; consequently, violations of these provisions/requirements are not subject to the enforcement remedies that are available for NPDES violations.

T. Notification of Interested Parties. The Regional Water Board has notified the Discharger and interested agencies and persons of its intent to prescribe Waste Discharge Requirements for the discharge and has provided them with an opportunity to submit their written comments and recommendations. Details of notification are provided in the Fact Sheet of this Order.

U. Consideration of Public Comment. The Regional Water Board, in a public meeting, heard and considered all comments pertaining to the discharge. Details of the Public Hearing are provided in the Fact Sheet of this Order.

III. DISCHARGE PROHIBITIONS

A. Discharge of wastewater at a location different from that described in this Order is prohibited.

B. The bypass or overflow of untreated wastewater or wastes to surface waters or surface water drainage courses is prohibited, except as allowed in Standard Provision I.G. of Attachment D, Standard Provisions.

C. The monthly average effluent dry weather discharge flow rate from the facility shall not exceed the design capacity.

D. The Discharger shall not cause degradation of any water supply, except as consistent with State Board Resolution No. 68-16.

E. The treatment or disposal of wastes from the facility shall not cause pollution or nuisance as defined in section 13050, subdivisions (l) and (m), of the California Water Code.

F. The discharge of any substances in concentrations toxic to animal or plant is prohibited.

G. The discharge of any radiological, chemical, or biological warfare agent or high level radiological waste is prohibited

IV. EFFLUENT LIMITATIONS AND DISCHARGE SPECIFICATIONS

A. Effluent Limitations – Discharge Points 001 and 002

1. Effluent Limitations Applicable to Discharge Points 001 and 002

a. The Discharger shall maintain compliance with the following effluent limitations at Discharge Points 001 and 002 into Arroyo Simi, thence to the Calleguas Creek, with compliance measured at Monitoring Location EFF-001 as described in the attached Monitoring and Reporting Program (MRP).

Table 6. Effluent Limitations Applicable to Discharge Points 001 and 002

Parameter	Units	Effluent Limitations				
		Average Monthly	Average Weekly	Maximum Daily	Instantaneous Minimum	Instantaneous Maximum
$BOD_5$20ºC	mg/L	20	30	45		
	lbs/day[1]	2,080	3,130	4,690		
Total Suspended Solids (TSS)	mg/L	15	40	45		
	lbs/day[1]	1,560	4,170	4,690		
pH	standard units	--	--	--	6.5	8.5
Oil and Grease	mg/L	10	--	15		
	lbs/day[1]	1,040	--	1,560		
Settleable Solids	ml/L	0.1	--	0.3		
Total Residual Chlorine	mg/L	--	--	0.1		
Total Dissolved Solids	mg/L	850[2]	--	--		
	lbs/day[1]	88,600	--	--		

[1] The mass emission rates are based on the plant design flow rate of 12.5 mgd, and are calculated as follows: Flow (MGD) x Concentration (mg/L) x 8.34 (conversion factor) = lbs/day. During wet-weather storm events in which the flow exceeds the design capacity, the mass discharge rate limitations shall not apply, and concentration limitations will provide the only applicable effluent limitations.

[2] The interim effluent limitation shown in Table 7 for the same parameter shall supercede this effluent limitation upon the effective date of the *Calleguas Creek Watershed Salts TMDL (Salts TMDL)* established by this Regional Board on October 4, 2007. At the time the interim limits in Table 7 are operative, the mass-based limit corresponding to this interim effluent limit will be adjusted in accordance with the formula shown in footnote above.

Parameter	Units	Effluent Limitations				
		Average Monthly	Average Weekly	Maximum Daily	Instantaneous Minimum	Instantaneous Maximum
	lbs/day	850 x Q-AF[3]				
Sulfate	mg/L	250[2]	--	--		
	lbs/day[1]	26,100	--	--		
	lbs/day	250 x Q-AF[3]				
Chloride	lbs/day	--	--	10,100[4]		
	lbs/day	--	--	9,200[5]		
	lbs/day	150 x Q-AF[3]				
Boron	mg/L	1	--	--		
	lbs/day[1]	104	--	--		
MBAS	mg/L	0.5	--	--		
	lbs/day[1]	50	--	--		
	mg/L	2.4[6]	--	3.3[6]		

[3] This limitation shall become operative fifteen years after the effective date of the *Salts TMDL*, established by the Regional Board on October 4, 2007. The TMDL will become effective following approval from USEPA. Consistent with the TMDL, this limitation is derived from the final WLA in the *Salts TMDL* and will supercede any previous applicable effluent limitation. Prior to the operative date of the final WLA-based limits, the TMDL specifies interim waste load allocations for total dissolved solids, sulfate, and chloride, which may be re-evaluated three, seven, and ten years after the TMDL effective date. Interim limits for TDS, sulfate, and chloride, consistent with the interim waste load allocations have been incorporated into the NPDES Order and will apply on the effective date of *Salts TMDL* (See Section IV.A.3.).

Consistent with *Salts TMDL,* these limits apply only during dry weather (as defined in the *Salts TMDL*).
AF represents the adjustment factor, which equals the difference between the minimum salts export requirement and the actual salts export.
Q represents the POTW flow at the time the water quality measurement is collected and a conversion factor to lbs/day based on the units of measure for the flow.

[4] This limitation will be superseded by the interim effluent limit for chloride shown in Table 7 upon the effective date of the *Calleguas Creek Watershed Salts TMDL*. This limitation is derived from the waste load allocation for chloride under routine conditions, as set forth in the Chloride TMDL, established by USEPA on March 22, 2002.

[5] This limitation will be superseded by the interim effluent limit for chloride shown in Table 7 upon the effective date of the *Calleguas Creek Watershed Salts TMDL*. This limitation is derived from the waste load allocation for chloride under drought conditions, as set forth in the Chloride TMDL, established by USEPA on March 22, 2002. The Chloride TMDL provides that drought conditions exist when the flow in Arroyo Simi 2 cubic feet per second (cfs) or less.

[6] This limitation is derived from the final waste load allocation for ammonia nitrogen, as set forth in the *Nitrogen Compounds and Related Effects TMDL,* established by the Regional Board on October 24, 2002. Final Waste Load Allocations became operative on October 24, 2004.

Parameter	Units	Effluent Limitations				
		Average Monthly	Average Weekly	Maximum Daily	Instantaneous Minimum	Instantaneous Maximum
Ammonia Nitrogen	lbs/day	--	--	2.9xQ[7]		
Nitrate + Nitrite (as N)	mg/L	9[8]	--	--		
	lbs/day	--	--	--		
Nitrate (as N)	mg/L	9[9]	--	--		
	lbs/day	--	--	--		
Nitrite (as N)	mg/L	0.9[10]	--	--		
	lbs/day	--	--	--		
Copper	µg/L	30.5[11]	--	31[11]		
	lbs/day	--	--	--		
Nickel	µg/L	169[11]	--	960[11]		
	lbs/day	--	--	--		
Mercury	lbs/month	0.031[12]	--	--		

[7] This limitation is derived from the final waste load allocation for ammonia nitrogen, as set forth in Resolution No. R4-2008-0XX, *Amendment to the Water Quality Control Plan for the Los Angeles Region through revision of the Waste Load Allocations for the Calleguas Creek Watershed Nitrogen Compounds and Related Effects Total Maximum Daily Load*, adopted by the Regional Board on September 11, 2008.

Q represents the POTW effluent flow at the time the water quality measurement is collected and a conversion factor to lbs/day based on the units of measure for the flow.

[8] This limitation is derived from the final waste load allocation for nitrate plus nitrite nitrogen, as set forth in the *Nitrogen Compounds and Related Effects TMDL,* established by the Regional Board on October 24, 2002. Final Waste Load Allocations became operative on July 16, 2007. However, this limitation will not be in effect until after April 30, 2009, as set forth in the accompanying amended Time Schedule Order R4-2008-YYYY.

[9] This limitation is derived from the final waste load allocation for nitrate nitrogen, as set forth in the *Nitrogen Compounds and Related Effects TMDL,* established by the Regional Board on October 24, 2002. Final Waste Load Allocations became operative on July 16, 2007.

[10] This limitation is derived from the final waste load allocation for nitrite nitrogen, as set forth in the *Nitrogen Compounds and Related Effects TMDL*, established by the Regional Board on October 24, 2002. Final Waste Load Allocations became operative on July 16, 2007.

[11] This limitation is derived from the final waste load allocation, as set forth in the *Calleguas Creek Watershed Metals TMDL,* established by the Regional Board on June 8, 2006. The TMDL became effective on March 26, 2007. This final effluent limitation will apply on the effective date of this permit.

[12] This limitation does not become operative until March 26, 2017 in accordance with the *Calleguas Creek Watershed Metals TMDL,* established by the Regional Board on June 8, 2006. This limitation is derived from the waste load allocation (WLA) for mercury specified in pounds per month as set forth in the said TMDL. The TMDL became effective on March 26, 2007. Consistent with the TMDL, the ten-year compliance period is based on the estimated time frame for completing the relevant implementation actions delineated in the TMDL and shown in Table 7-19.2 in Attachment A to Resolution No. R4-2006-012. The TMDL assigns an interim waste load allocation and allows ten-year compliance schedule with re-evaluation of the interim WLA

Parameter	Units	Effluent Limitations				
		Average Monthly	Average Weekly	Maximum Daily	Instantaneous Minimum	Instantaneous Maximum
Selenium	µg/L	4.1	--	8.2		
	lbs/day[1]	0.43	--	0.85		
Cyanide	µg/L	4.3	--	8.5		
	lbs/day[1]	0.45	--	0.89		
Chlorpyrifos	µg/L	0.014[13]	--	--		
	lbs/day	--	--	--		
Diazinon	µg/L	0.1[13]	--	0.1[13]		
	lbs/day	--	--	--		
Toxicity	TU_c	1.0[14]	--	--		
Chlordane	µg/L	0.00059[15]	--	0.0012[15]		
	lbs/day	--	--	--		
4,4'-DDD	µg/L	0.00084[15]	--	0.0017[15]		
	lbs/day	--	--	--		

by March 25, 2012. An interim effluent limit based on the interim waste load allocations has been incorporated into this NPDES Order and will apply on the Order's effective date (See Section IV.A.3.).

[13] This limitation is derived from the final waste load allocation as set forth in the *Calleguas Creek Watershed Toxicity TMDL,* established by the Regional Board on July 7, 2005. The TMDL became effective on March 24, 2006. Consistent with the TMDL, the final WLA-based limit became operative on March 23, 2008. The interim limits specified in this TMDL lapsed prior to the date this permit was renewed. Therefore, only final WLA-based limits are incorporated into this permit.

[14] The *Calleguas Creek Watershed Toxicity TMDL* includes a waste load allocation~~s~~ of 1.0 TUc toxicity, which is required to be implemented in accordance with USEPA, State Board, and Regional Board resolutions, guidance and policy at the time of permit issuance or renewal. Consistent with the TMDL Implementation Plan and the staff report, this toxicity "limit" will be implemented~~ing the WLAs shall currently serve~~ as a trigger~~, not an enforceable limitation,~~ for initiation of ~~a~~ the TRE/TIE process. Within 48 hours of knowledge of an exceedance of the 1.0 TUc, the Discharger shall conduct six accelerated tests within a 12-week period. If three of the six accelerated tests exceed 1.0 TUc, then the Discharger shall initiate TIE/TRE process, per protocols ~~as~~ outlined in USEPA's "Understanding and Accounting for Method Variability in Whole Effluent Toxicity Applications Under the National Pollutant Discharge Elimination System Program" (2000) and ~~current NPDES permits held by dischargers to the Calleguas Creek Watershed~~ any provision of this Order. Failure to complete the accelerated monitoring and/or failure to initiate the TIE/TRE process is enforceable by the Regional Board.

[15] This limitation shall not become operative until up to March 24, 2026 in accordance with the *Calleguas Creek Watershed Organochlorine Pesticide, PCB, and Siltation TMDL,* established by the Regional Board on July 7, 2005. This limitation is derived from the waste load allocation set forth in said TMDL. The TMDL became effective on March 24, 2006. Consistent with the TMDL, the ten-year compliance period is based on the estimated time frame for completing the relevant implementation actions delineated in the TMDL and shown in Table 7-19.2 in Attachment A to Resolution No. R4-2006-012. Prior to the effective date of the final WLA-based limits, the TMDL specifies interim waste load allocations, which may be re-evaluated and reconsidered five, ten, and fifteen years after the TMDL effective date based on State Implementation Policy procedures. Interim limits consistent with those interim waste load allocations have been incorporated into the NPDES Order and will apply on the effective date of this NPDES Order (See Section IV.A.3.).

Parameter	Units	Effluent Limitations				
		Average Monthly	Average Weekly	Maximum Daily	Instantaneous Minimum	Instantaneous Maximum
4,4'-DDE	µg/L	0.00059[15]	--	0.0012[15]		
	lbs/day	--	--	--		
4,4'-DDT	µg/L	0.00059[15]	--	0.0012[15]		
	lbs/day	--	--	--		
Dieldrin	µg/L	0.00014[15]	--	0.00028[15]		
	lbs/day	--	--	--		
PCBs	µg/L	0.00017[15]	--	0.00034[15]		
	lbs/day	--	--	--		
Toxaphene	µg/L	0.00016[15]	--	0.00033[15]		
	lbs/day	--	--	--		
Halomethanes[16]	µg/L	80	--	--		
	lbs/day[1]	8	--	--		

2. Other Effluent Limitations Applicable to Discharge Points 001 and 002

a. **Percent removal**: The average monthly removal of BOD 5-day 20°C and total suspended solids shall not be less than 85 percent.

b. The temperature of wastes discharged shall not exceed 86°F except as a result of external ambient temperature.

c. Radioactivity of the wastes discharged shall not exceed the limits specified in Title 22, Chapter 15, Article 5, Section 64443, of the California Code of Regulations, or subsequent revisions.

d. The wastes discharged to water courses shall at all times be adequately disinfected. For the purpose of this requirement, the wastes shall be considered adequately disinfected if the median number of total coliform bacteria in the disinfected effluent does not exceed an MPN or CFU of 2.2 per 100 milliliters, and the number of total coliform bacteria does not exceed an MPN or CFU of 23 per 100 milliliters in more than one sample within any 30-day period. No sample shall exceed an MPN or CFU of 240 total coliform bacteria per 100 milliliters in more than one sample in any 30 day period. The median value shall be determined from the bacteriological results of the last seven (7) days for which an analysis has been completed. Samples shall be collected at a time when wastewater flow and characteristics are most demanding on treatment facilities and disinfection processes.

[16] Halomethanes shall mean the sum of bromoform, bromodichloromethane, chloroform, and dibromochloromethane.

e. For the protection of the water contact recreation beneficial use, the wastes discharged to water courses shall have received adequate treatment, so that the turbidity of the wastewater does not exceed any of the following: (a) a monthly average of 2 Nephelometric turbidity units (NTUs); (b) 5 NTUs more than 5 percent of the time (72 minutes) within a 24-hour period; and (c) 10 NTU at any time.

f. To protect the underlying ground water basins, pollutants shall not be present in the wastes discharged at concentrations that pose a threat to ground water quality.

g. Acute Toxicity Limitation

~~1.~~a. The acute toxicity of the effluent shall be such that:

~~2.~~(i) the average survival in the undiluted effluent for any three (3) consecutive 96-hour static renewal bioassay tests shall be at least 90%, and

~~3.~~(ii) no single test produces less than 70% survival.

~~4.~~b. If either of the above requirements IV.A.2.g.a.(i) or IV.A.2.g.a.(ii) is not met, the Discharger shall conduct six additional tests, approximately every two weeks, over a 12-week period. The Discharger shall ensure that results of a failing acute toxicity test are received by the Discharger within 24 hours of completion of the test and the additional tests shall begin within 5 business days of receipt of the result. If the additional tests indicate compliance with acute toxicity limitation, the Discharger may resume regular testing. However, if the results of any two of the six accelerated tests are less than 90% survival, then the Discharger shall begin a Toxicity Identification Evaluation (TIE). The TIE shall include all reasonable steps to identify the sources of toxicity. Once the sources are identified, the Discharger shall take all reasonable steps to reduce toxicity to meet the objective.

~~5.~~c. If the initial test and any of the additional six acute toxicity bioassay tests results are less than 70% survival, the Discharger shall immediately implement the Initial Investigation Toxicity Reduction Evaluation (TRE) Workplan.

~~6.~~d. The Discharger shall conduct acute toxicity monitoring as specified in Attachment E - Monitoring and Reporting Program (MRP).

h. Chronic Toxicity Trigger and Requirements:

a. The chronic toxicity of the effluent shall be expressed and reported in toxic units, where:

$$TU_c = \frac{100}{NOEC}$$

The No Observable Effect Concentration (NOEC) is expressed as the maximum percent effluent concentration that causes no observable effect on test organisms, as determined by the results of a critical life stage toxicity test.

b. There shall be no chronic toxicity in the effluent discharge.

c. If the chronic toxicity of the effluent exceeds the monthly trigger median of 1.0 TU_c, the Discharger shall immediately implement accelerated chronic toxicity testing according to Attachment E - MRP, Section V.B.3. If any three out of the initial test and the six accelerated tests results exceed 1.0 TU_c, the Discharger shall initiate a TIE and implement the Initial Investigation TRE Workplan, as specified in Attachment E – MRP, Section V.D.

~~a.~~d. The Discharger shall conduct chronic toxicity monitoring as specified in Attachment E – MRP.

3. Interim Effluent Limitations

a. **Metals TMDL-based Interim limits for Mercury**: During the period beginning ~~July 25~~October 31, 2008 (Permit Effective Date) and ending on ~~May~~August 10, 2013 (Permit Expiration Date), the Discharger shall maintain compliance with the mercury effluent limitation in Table 7 at Discharge Points 001 and 002, with compliance measured at Monitoring Location EFF-001 as described in the attached MRP. This interim effluent limitation shall apply in lieu of the corresponding final effluent limitation for mercury for the duration of this Order and in accordance with the *Calleguas Creek Watershed Metals TMDL* (Table 7-19.2 in Attachment A to Resolution R4-2006-012), which became effective on March 26, 2007, and establishes a 10-year compliance period for achieving the final waste load allocation for mercury.

b. **OC Pesticides, PCBs, and Siltation TMDL-based Interim limits**: During the period beginning ~~July 25~~October 31, 2008 (Permit Effective Date) and ending on ~~May~~August 10, 2013 (Permit Expiration Date), the Discharger shall maintain compliance with chlordane, 4,4'-DDD, 4,4'-DDE, 4,4'-DDT, dieldrin, PCBs, and toxaphene effluent limitations in Table 7 at Discharge Points 001 and 002, with compliance measured at Monitoring Location EFF-001 as described in the

attached MRP. These interim effluent limitations shall apply in lieu of the corresponding final effluent limitations specified for the same parameters for the duration of this Order and in accordance with the *Calleguas Creek Watershed Organochlorine Pesticide, PCB, and Siltation TMDL* (Table 7-17.2 in Attachment A to Resolution R4-2005-010) which became effective on March 24, 2006. The TMDL specifies that these interim limits may be re-evaluated five, ten, and fifteen years after the TMDL effective date.

c. **Boron, Chloride, Sulfate, and TDS (Salts) TMDL-based Interim limits**: On October 4, 2007, the Regional Water Board adopted the *Calleguas Creek Watershed Salts TMDL.* This TMDL was not effective on the date of adoption of this NPDES permit because USEPA had not approved it as of that date. Following USEPA approval of this TMDL, the interim effluent limitation for TDS, sulfate, and chloride in Table 7 shall apply for a 15-year period after the effective date of the TMDL, and shall be re-evaluated in accordance with the implementation schedule established in the TMDL. Final effluent limitations in lbs/day for chloride, TDS, sulfate, and boron shall apply fifteen years after the effective date of the TMDL. If USEPA does not approve the *Salts TMDL*, the interim effluent limitations shall not apply. However, an interim limit of 190 mg/L for chloride will be operative on the effective date of this permit consistent with Time Schedule Order No. R4-2008-YYXX, which the Regional Water Board shall adopt simultaneously with this NDPES permit.

d. **NON-SIP/CTR-based Interim limits**: On August 9, 2007, the Regional Water Board adopted Time Schedule Order (TSO) No. R4-2007-0038 which allows the discharger to make necessary modifications to the nitrification/denitrification system to achieve full compliance with the final effluent limitations for nitrate plus nitrite as nitrogen prescribed in Order No. R4-2003-0081. The TSO prescribed interim limits for nitrate plus nitrite as nitrogen for the facility to comply with the final effluent limits by April 30, 2009. The interim limits and compliance schedule stated in TSO No. R4-2007-0038 will be carried forward pursuant to Amended TSO No. R4-2008-YYYY, which the Regional Water Board shall adopt simultaneously with this permit.

Table 7. Interim Effluent Limitations

Parameter	Units	Effluent Limitations				
		Average Monthly	Average Weekly	Maximum Daily	Instantaneous Minimum	Instantaneous Maximum
Mercury	lbs/month	0.18[17]	--	--		

[17] This interim effluent limitation, specified in pounds per month, is derived from the interim waste load allocation set forth in the *Calleguas Creek Metals TMDL*, established by the Regional Board on June 8, 2006. The TMDL became effective on March 26, 2007. This limitation shall apply in lieu of the corresponding final effluent limitations specified for mercury in Table 6 of this Order, during the time period indicated in this provision.

Parameter	Units	Effluent Limitations				
		Average Monthly	Average Weekly	Maximum Daily	Instantaneous Minimum	Instantaneous Maximum
Chlordane	µg/L	--	--	0.1[18]		
4,4'-DDD	µg/L	--	--	0.05[18]		
4,4'-DDE	µg/L	--	--	0.0012[18]		
4,4'-DDT	µg/L	--	--	0.01[18]		
Dieldrin	µg/L	--	--	0.01[18]		
PCBs	µg/L	--	--	0.5[18]		
Toxaphene	µg/L	--	--	0.5[18]		
Total Dissolved Solids	mg/L	955[19]	--			
Sulfate	mg/L	298[19]	--			
Chloride	mg/L	183[19]	--			

B. Reclamation Specifications – Discharge Points 001 and 002

1. The Discharger currently recycles approximately 0.6% (18.25 million gallons per year) of the total treated effluent and plans to continue doing so. Recycled water is used for landscape irrigation at the Simi Valley WQCP and for dust control at a landfill. The production, distribution, and reuse of recycled water are presently regulated under Water Reclamation Requirements (WRR) Order No. 87-46, adopted by this Board on May 5, 1987.

---

[18] This interim effluent limitation is derived from the interim waste load allocation as set forth in the *Calleguas Creek Watershed Organochlorine Pesticides, Polychlorinated Biphenyls, and Siltation* TMDL, established by the Regional Board on July 5, 2005. The TMDL became effective on March 24, 2006. This limitation shall apply in lieu of the corresponding final effluent limitations specified for the same parameter in Table 6a of this Order during the time period indicated in this provision. The TMDL specifies that these interim limits may be re-evaluated five, ten, and fifteen years after the TMDL effective date.

[19] The interim limit for this constituent is specified in the *Calleguas Creek Watershed Salts TMDL,* established by the Regional Board on October 4, 2007. Following USEPA approval of the TMDL, this interim effluent limitation shall apply in lieu of the corresponding final effluent limitations specified for the same parameter during the time period indicated in this provision. If USEPA does not approve the *Salts TMDL*, this TMDL-based interim limitation shall not apply.

V. RECEIVING WATER LIMITATIONS

A. Surface Water Limitations

Receiving water limitations are based on water quality objectives contained in the Basin Plan and are a required part of this Order. The discharge shall not cause the following in Arroyo Simi, Calleguas Creek, or Mugu Lagoon:

~~i.~~1. For waters designated with a warm freshwater habitat (WARM) beneficial use, the temperature of the receiving water at any time or place and within any given 24-hour period shall not be altered by more than 5°F above the natural temperature due to the discharge of effluent at the receiving water station located downstream of the discharge. Natural conditions shall be determined on a case-by-case basis.

~~ii.~~2. The pH of inland surface waters shall not be depressed below 6.5 or raised above 8.5 as a result of wastes discharged. Ambient pH levels shall not be changed more than 0.5 units from natural conditions as a result of wastes discharged. Natural conditions shall be determined on a case-by-case basis.

~~iii.~~3. The dissolved oxygen in the receiving water shall not be depressed below 5 mg/L as a result of the wastes discharged.

~~iv.~~4. The fecal coliform concentration in the receiving water shall not exceed the following, as a result of wastes discharged:

a. Geometric Mean Limits

~~a.~~i. E.coli density shall not exceed 126/100 mL.

~~b.~~ii. Fecal coliform density shall not exceed 200/100 mL.

b. Single Sample Limits

~~(1)~~i. E.coli density shall not exceed 235/100 mL.

~~(2)~~ii. Fecal coliform density shall not exceed 400/100 mL.

~~v.~~5. Waters shall be free of changes in turbidity that cause nuisance or adversely affect beneficial uses. Increases in natural turbidity attributable to controllable water quality factors shall not exceed the following limits, as a result of wastes discharged:

~~i.~~a. Where natural turbidity is between 0 and 50 NTU, increases shall not exceed 20%, and

~~ii.~~b. Where natural turbidity is greater than 50 NTU, increases shall not exceed 10%.

~~vi.~~6. The wastes discharged shall not produce concentrations of toxic substances in the receiving water that are toxic to or cause detrimental physiological responses in human, animal, or aquatic life.

~~vii.~~7. The wastes discharged shall not cause concentrations of contaminants to occur at levels that are harmful to human health in waters which are existing or potential sources of drinking water.

~~viii.~~8. The concentrations of toxic pollutants in the water column, sediments, or biota shall not adversely affect beneficial uses as a result of the wastes discharged.

~~ix.~~9. The wastes discharged shall not contain substances that result in increases in BOD, which adversely affect the beneficial uses of the receiving waters.

~~x.~~10. Waters shall not contain biostimulatory substances in concentrations that promote aquatic growth to the extent that such growth causes nuisance or adversely affects beneficial uses.

~~xi.~~11. The wastes discharged shall not cause the receiving waters to contain any substance in concentrations that adversely affect any designated beneficial use.

~~xii.~~12. The wastes discharged shall not alter the natural taste, odor, and color of fish, shellfish, or other surface water resources used for human consumption.

~~xiii.~~13. The wastes discharged shall not result in problems due to breeding of mosquitoes, gnats, black flies, midges, or other pests.

~~xiv.~~14. The wastes discharged shall not result in visible floating particulates, foams, and oil and grease in the receiving waters.

~~xv.~~15. The wastes discharged shall not alter the color of the receiving waters; create a visual contrast with the natural appearance of the water; nor cause aesthetically undesirable discoloration of the receiving waters.

~~xvi.~~16. The wastes discharged shall not contain any individual pesticide or combination of pesticides in concentrations that adversely affect beneficial uses of the receiving waters. There shall be no increase in pesticide concentrations found in bottom sediments or aquatic life as a result of the wastes discharged.

~~xvii.~~17. Acute Toxicity Receiving Water Quality Objective

~~(1)~~a. There shall be no acute toxicity in ambient waters as a result of wastes discharged.

~~(2)~~b. Receiving water and effluent toxicity testing shall be performed on the same day as close to concurrently as possible.

~~(3)~~c. The acute toxicity of the receiving water including mixing zone, at monitoring location RSW-002, located immediately downstream of the discharge, shall be such that: (i) the average survival in the undiluted receiving water for any three (3) consecutive 96-hour static, static-renewal, or continuous flow bioassay tests shall be at least 90%, and (ii) no single test produces less than 70% survival. Static-renewal bioassay tests may be used, as allowed by the most current USEPA test method for measuring acute toxicity.

~~(4)~~d. If the upstream acute toxicity of the receiving water is greater than the downstream acute toxicity but the effluent acute toxicity is in compliance, acute toxicity accelerated monitoring in the receiving water according to MRP Section V.A.2.d does not apply.

~~xviii.~~18. Chronic Toxicity Receiving Water Quality Objective

~~(1)~~a. There shall be no chronic toxicity in ambient waters as a result of wastes discharged.

~~(2)~~b. Receiving water and effluent toxicity testing shall be performed on the same day as close to concurrently as possible.

~~(3)~~c. If the chronic toxicity in the receiving water at the monitoring station immediately downstream of the discharge, exceeds the monthly median of 1.0 TU_c trigger in a critical life stage test and the toxicity cannot be attributed to upstream toxicity, as assessed by the Discharger, then the Discharger shall immediately implement an accelerated chronic toxicity testing according to Monitoring and Reporting Program CI 3021, Section V.B.3. If two of the six tests exceed a 1.0 TU_c trigger, the Discharger shall initiate a TIE and implement the Initial Investigation TRE Workplan.

~~(4)~~d. If the chronic toxicity of the receiving water upstream of the discharge is greater than the downstream and the TUc of the effluent chronic toxicity test is less than or equal to a monthly median of 1 TU_c trigger, then accelerated monitoring need not be implemented.

B. Groundwater Limitations

1. The discharge shall not cause the underlying groundwater to be degraded, to exceed water quality objectives, to unreasonably affect beneficial uses, or to cause a condition of pollution or nuisance.

VI. PROVISIONS

A. Standard Provisions

1. **Standard Provisions**
   The Discharger shall comply with all Standard Provisions included in Attachment D of this Order.

2. **Regional Water Board Standard Provisions**
   The Discharger shall comply with the Regional Water Board-specific Standard Provisions as follows:

   a. Neither the treatment nor the discharge of pollutants shall create pollution, contamination, or nuisance as defined by section 13050 of the California Water Code.

   b. Odors, vectors, and other nuisances of sewage or sludge origin beyond the limits of the treatment plant site or the sewage collection system due to improper operation of facilities, as determined by the Regional Water Board, are prohibited.

   c. All facilities used for collection, transport, treatment, or disposal of "wastes" shall be adequately protected against damage resulting from overflow, washout, or inundation from a storm or flood having a recurrence interval of once in 100 years.

   d. Collection, treatment, and disposal systems shall be operated in a manner that precludes public contact with wastewater.

   e. Collected screenings, sludges, and other solids removed from liquid wastes shall be disposed of in a manner approved by the Executive Officer of the Regional Water Board.

   f. The provisions of this order are severable. If any provision of this order is found invalid, the remainder of this Order shall not be affected.

   g. Nothing in this permit shall be construed to preclude the institution of any legal action or relieve the discharger from any responsibilities, liabilities or penalties established pursuant to any applicable State law or regulation under authority preserved by Section 510 of the CWA.

   h. Nothing in this permit shall be construed to preclude the institution of any legal action or relieve the discharger from any responsibilities, liabilities or penalties to which the discharger is or may be subject to under Section 311 of the CWA.

i. The Discharger must comply with the lawful requirements of municipalities, counties, drainage districts, and other local agencies regarding discharges of storm water to storm drain systems or other water courses under their jurisdiction, including applicable requirements in municipal storm water management programs developed to comply with NPDES permits issued by the Regional Water Board to local agencies.

j. Discharge of wastes to any point other than specifically described in this Order is prohibited, and constitutes a violation thereof.

k. The Discharger shall comply with all applicable effluent limitations, national standards of performance, toxic effluent standards, and all federal regulations established pursuant to Sections 301, 302, 303(d), 304, 306, 307, 316, 403, and 405 of the Federal CWA and amendments thereto.

l. These requirements do not exempt the operator of the waste disposal facility from compliance with any other laws, regulations, or ordinances which may be applicable; they do not legalize this waste disposal facility, and they leave unaffected any further restraints on the disposal of wastes at this site which may be contained in other statutes or required by other agencies.

m. Oil or oily material, chemicals, refuse, or other polluting materials shall not be stored or deposited in areas where they may be picked up by rainfall and carried off of the property and/or discharged to surface waters. Any such spill of such materials shall be contained and removed immediately.

n. A copy of these waste discharge specifications shall be maintained at the discharge facility so as to be available at all times to operating personnel.

o. If there is any storage of hazardous or toxic materials or hydrocarbons at this facility and if the facility is not manned at all times, a 24-hour emergency response telephone number shall be prominently posted where it can easily be read from the outside.

p. The Discharger shall file with the Regional Water Board a report of waste discharge at least 120 days before making any proposed change in the character, location or volume of the discharge.

q. In the event of any change in name, ownership, or control of these waste disposal facilities, the discharger shall notify the Regional Water Board of such change and shall notify the succeeding owner or operator of the existence of this Order by letter, a copy of which shall be forwarded to the Regional Water Board.

r. California Water Code section 13385 provides that any person who violates a waste discharge requirement or other requirements is subject to civil penalties of up to $5,000 per day, $10,000 per day, or $25,000 per day of violation, or when the violation involves the discharge of pollutants, is subject to civil penalties of up

to $10 per gallon per day or $25 per gallon per day of violation; or some combination thereof, depending on the violation, or upon the combination of violations. Violation of any of the provisions of the NPDES program or of any of the provisions of this Order may subject the violator to any of the penalties described herein, or any combination thereof, at the discretion of the prosecuting authority; except that only one kind of penalty may be applied for each kind of violation.

s. Pursuant to California Water Code 13387(e), any person who knowingly makes any false statement, representation, or certification in any record or other document submitted or required to be maintained under this order, including monitoring reports or reports of compliance or noncompliance, or who knowingly falsifies, tampers with, or renders inaccurate any monitoring device or method required to be maintained in this order and is subject to a fine of not more than $25,000, imprisonment for not more than two years, or both. For a subsequent conviction, such a person shall be punished by a fine of not more than $25,000 per day of violation, by imprisonment of not more than four years, or by both.

t. The discharge of any waste resulting from the combustion of toxic or hazardous wastes to any waste stream that ultimately discharges to waters of the United States is prohibited, unless specifically authorized elsewhere in this permit.

u. The Discharger shall notify the Executive Officer in writing no later than 6 months prior to planned discharge of any chemical, other than the products previously reported to the Executive Officer, which may be toxic to aquatic life. Such notification shall include:
(1) Name and general composition of the chemical,
(2) Frequency of use,
(3) Quantities to be used,
(4) Proposed discharge concentrations, and
(5) USEPA registration number, if applicable.

v. In the event the Discharger does not comply or will be unable to comply for any reason, with any prohibition, maximum daily effluent limitation, or receiving water limitation of this Order, the Discharger shall notify the Watershed Regulatory Section Chief at the Regional Water Board by telephone (213) 576-6616, or by fax (213) 576-6660 within 24 hours of having knowledge of such noncompliance, and shall confirm this notification in writing to the Regional Board within five days, unless the Regional Board waives confirmation. The written notification shall state the nature, time, duration, and cause of noncompliance, and shall describe the measures being taken to remedy the current noncompliance, and the measures to prevent recurrence including, where applicable, a schedule of implementation. Other noncompliance requires written notification as above at the time of the normal monitoring report.

w. Prior to making any change in the point of discharge, place of use, or purpose of use of treated wastewater that results in a decrease of flow in any portion of a

watercourse, the Discharger must file a petition with the State Water Board, Division of Water Rights, and receive approval for such a change. (Wat. Code § 1211.)

B. Monitoring and Reporting Program (MRP) Requirements

The Discharger shall comply with the MRP, and future revisions thereto, in Attachment E of this Order.

C. Special Provisions

1. Reopener Provisions

a. This Order may be modified, revoked and reissued, or terminated for cause, including, but not limited to:

(1) Violation of any term or condition contained in this Order;

(2) Obtaining this Order by misrepresentation, or by failure to disclose fully all relevant facts; or,

(3) A change in any condition that requires either a temporary or permanent reduction or elimination of the authorized discharge.

The filing of a request by the Discharger for an Order modification, revocation, and issuance or termination, or a notification of planned changes or anticipated noncompliance does not stay any condition of this Order.

b. This Order may be reopened for modification, or revocation and reissuance as a result of the detection of a reportable priority pollutant generated by special conditions included in this Order. These special conditions may be, but are not limited to, fish tissue sampling, whole effluent toxicity, monitoring requirements on internal waste stream(s), and monitoring for surrogate parameters. Additional requirements may be included in this Order as a result of the special condition monitoring data.

c. This Order may be modified, in accordance with the provisions set forth in 40 C.F.R. Parts 122 and 124, to include requirements for the implementation of the watershed protection management approach.

d. The Board may modify, or revoke and reissue this Order if present or future investigations demonstrate that the discharge(s) governed by this Order will cause, have the potential to cause, or will contribute to adverse impacts on water quality and/or beneficial uses of the receiving waters.

e. This Order may also be modified, revoked, and reissued or terminated in accordance with the provisions of 40 C.F.R. parts 122.44, 122.62 to 122.64,

125.62, and 125.64. Causes for taking such actions include, but are not limited to, failure to comply with any condition of this Order, endangerment of human health or the environment resulting from the permitted activity, or acquisition of newly obtained information which would have justified the application of different conditions if known at the time of Order adoption. The filing of a request by the Discharger for an Order modification, revocation and issuance or termination, or a notification of planned changes or anticipated noncompliance does not stay any condition of this Order.

f. This Order may be modified, in accordance with the provisions set forth in 40 C.F.R. parts 122 to 124, to include new MLs.

g. This Order may be reopened and modified to revise effluent limitations as a result of future Basin Plan Amendments, such as an update of a water quality objective, or the adoption of a TMDL for the Calleguas Creek Watershed.

h. This Order may be reopened and modified to revise effluent limitations as a result of the delisting of a pollutant from the 303(d) List.

i. This Order may be reopened and modified to revise the chronic toxicity effluent limitation, and/or total residual chlorine limitations, to the extent necessary, to be consistent with State Board precedential decisions, new policies, new laws, or new regulations.

j. This Order may be reopened to modify final effluent limits, if at the conclusion of necessary studies conducted by the Discharger, the Regional Board determines that dilution credits, attenuation factors, water effects ratio, site specific objectives, or metal translators are warranted.

2. Special Studies, Technical Reports and Additional Monitoring Requirements

a. Toxicity Reduction Requirements

The Discharger shall prepare and submit a copy of the Discharger's initial investigation Toxicity Reduction Evaluation (TRE) workplan to the Executive Officer of the Regional Water Board for approval within ~~90~~30 days of the ~~effective~~ date of adoption of this permit. If the Executive Officer does not disapprove the workplan within 60 days from the date in which it was received, the workplan shall become effective. The Discharger shall use USEPA manual EPA/833B-99/002 (municipal) as guidance, or most current version. At a minimum, the initial investigation TRE workplan must contain the provisions in Attachment G. This workplan shall describe the steps the Discharger intends to follow if toxicity is detected, and should include, at a minimum:

(1) A description of the investigation and evaluation techniques that will be used to identify potential causes and sources of toxicity, effluent variability, and treatment system efficiency.

(2) A description of the facility's methods of maximizing in-house treatment efficiency and good housekeeping practices, and a list of all chemicals used in the operation of the facility; and,

(3) If a toxicity identification evaluation (TIE) is necessary, an indication of the person who would conduct the TIEs (i.e., an in-house expert or an outside contractor).

If the effluent toxicity test result exceeds the 1.0 TUc monthly median toxicity trigger, then the Discharger shall immediately implement accelerated toxicity testing that consists of six additional tests, approximately every two weeks, over a 12-week period. Effluent sampling for the first test of the six additional tests shall commence within 5 days of receipt of the test results exceeding the toxicity ~~limitation~~trigger.

If the results of any ~~two~~three of the six tests (any ~~two~~three tests in a 12-week period) exceed the limitation, the Discharger shall initiate a Toxicity Reduction Evaluation (TRE).

If results of the implementation of the facility's initial investigation TRE workplan (as described above) indicate the need to continue the TRE/TIE, the Discharger shall expeditiously develop a more detailed TRE workplan for submittal to the Executive Officer within 15 days of completion of the initial investigation TRE.

Detailed toxicity testing and reporting requirements are contained in Section V of the MRP, (Attachment E).

b. Treatment Plant Capacity

The Discharger shall submit a written report to the Executive Officer of the Regional Water Board within 90 days after the "30-day (monthly) average" daily dry-weather flow equals or exceeds 75 percent of the design capacity of waste treatment and/or disposal facilities. The Discharger's senior administrative officer shall sign a letter, which transmits that report and certifies that the discharger's policy-making body is adequately informed of the report's contents. The report shall include the following:

(1) The average daily flow for the month, the date on which the peak flow occurred, the rate of that peak flow, and the total flow for the day;

~~(1)~~(2) The best estimate of when the monthly average daily dry-weather flow rate will equal or exceed the design capacity of the facilities; and

~~(2)~~(3) A schedule for studies, design, and other steps needed to provide additional capacity for waste treatment and/or disposal facilities before the waste flow rate equals the capacity of present units.

This requirement is applicable to those facilities which have not reached 75 percent of capacity as of the effective date of this Order. For those facilities that have reached 75 percent of capacity by that date but for which no such report has been previously submitted, such report shall be filed within 90 days of the issuance of this Order.

3. Best Management Practices and Pollution Prevention

a. Storm Water Pollution Prevention Plan (SWPPP)

Within 90 days of the effective date of this Order the Discharger shall submit an updated SWPPP that describes site-specific management practices for minimizing contamination of storm water runoff and for preventing contaminated storm water runoff from being discharged directly to waters of the State to the Regional Water Board. The SWPPP shall be developed in accordance with the requirements in *Storm Water Pollution Prevention Plan Requirements* **(**Attachment H). If all storm water is captured and treated on-site and no storm water is discharged or allowed to run off-site from the Facility, the Discharge shall provide certification with descriptions of on-site storm water management to the Regional Water Board.

b. Spill Clean-up Contingency Plan (SCP)

Within ninety days, the Discharger is required to submit a Spill Clean-up Contingency Plan, which describes the activities and protocols, to address clean-up of spills, overflows, and bypasses of untreated or partially treated wastewater from the Discharger's collection system or treatment facilities, that reach water bodies, including dry channels and beach sands. At a minimum, the Plan shall include sections on spill clean-up and containment measures, public notification, and monitoring. The Discharger shall review and amend the Plan as appropriate after each spill from the facility or in the service area of the facility. The Discharger shall include a discussion in the annual summary report of any modifications to the Plan and the application of the Plan to all spills during the year.

c. Pollutant Minimization Program (PMP)

Reporting protocols in the Monitoring and Reporting Program, Attachment E, Section X.B.4 describe sample results that are to be reported as Detected but Not Quantified (DNQ) or Not Detected (ND). Definitions for a reported Minimum Level (ML) and Method Detection Limit (MDL) are provided in Attachment A. These reporting protocols and definitions are used in determining the need to conduct a Pollution Minimization Program (PMP) as follows:

The Discharger shall be required to develop and conduct a PMP as further described below when there is evidence (e.g., sample results reported as DNQ

when the effluent limitation is less than the MDL, sample results from analytical methods more sensitive than those methods required by this Order, presence of whole effluent toxicity, health advisories for fish consumption, results of benthic or aquatic organism tissue sampling) that a pollutant is present in the effluent above an effluent limitation and either:

(1) The concentration of the pollutant is reported as DNQ and the effluent limitation is less than the reported ML; or

(2) The concentration of the pollutant is reported as ND and the effluent limitation is less than the MDL.

The goal of the PMP shall be to reduce all potential sources of a pollutant through pollutant minimization (control) strategies, including pollution prevention measures as appropriate, to maintain the effluent concentration at or below the effluent limitation. Pollution prevention measures may be particularly appropriate for persistent bioaccumulative priority pollutants where there is evidence that beneficial uses are being impacted. The Regional Water Board may consider cost-effectiveness when establishing the requirements of a PMP. The completion and implementation of a Pollution Prevention Plan, if required pursuant to California Water Code section 13263.3(d), shall be considered to fulfill the PMP requirements.

The PMP shall include, but not be limited to, the following actions and submittals acceptable to the Regional Water Board:

(1) An annual review and semi-annual monitoring of potential sources of the reportable pollutant(s), which may include fish tissue monitoring and other bio-uptake sampling;

~~(1)~~(2) Quarterly monitoring for the reportable pollutant(s) in the influent to the wastewater treatment system;

(3) Submittal of a control strategy designed to proceed toward the goal of maintaining concentrations of the reportable pollutant(s) in the effluent at or below the effluent limitation;

(3) Implementation of appropriate cost-effective control measures for the reportable pollutant(s), consistent with the control strategy; and

(5) An annual status report that shall be sent to the Regional Water Board including:

(a) All PMP monitoring results for the previous year;

(b) A list of potential sources of the reportable pollutant(s);

(c) A summary of all actions undertaken pursuant to the control strategy; and

(d) A description of actions to be taken in the following year.

4. Construction, Operation and Maintenance Specifications

a. Wastewater treatment facilities subject to this Order shall be supervised and operated by persons possessing certificates of appropriate grade pursuant to section 13625 et seq. of the California Water Code.

b. The Discharger shall maintain in good working order a sufficient alternate power source for operating the wastewater treatment and disposal facilities. All equipment shall be located to minimize failure due to moisture, liquid spray, flooding, and other physical phenomena. The alternate power source shall be designed to permit inspection and maintenance and shall provide for periodic testing. If such alternate power source is not in existence, the discharger shall halt, reduce, or otherwise control all discharges upon the reduction, loss, or failure of the primary source of power.

5. Special Provisions for Municipal Facilities (POTWs Only)

~~7.~~a. **Sludge Disposal Requirements**

(1) All sludge generated at the wastewater treatment plant will be disposed of, treated, or applied to land in accordance with federal regulations contained in 40 C.F.R. Part 503. These requirements are enforceable by USEPA.

(2) The Discharger shall ensure compliance with the requirements in SWRCB Order No. 2004- 10-DWQ, General Waste Discharge Requirements for the Discharge of Biosolids to Land for Use as a Soil Amendment in Agricultural, Silvicultural, Horticultural and Land Reclamation Activities" for those sites receiving the Discharger's biosolids which a Regional Water Quality Control Board has placed under this general order, and with the requirements in individual Waste Discharge Requirements (WDRs) issued by a Regional Water Board for sites receiving the Discharger's biosolids.

~~A.~~(3) The Discharger shall comply, if applicable, with WDRs issued by other Regional Water Boards to which jurisdiction the biosolids are transported and applied.

(4) The Discharger shall furnish this Regional Water Board with a copy of any report submitted to USEPA, State Board or other Regional Water Board, with respect to municipal sludge or biosolids.

~~8.~~b. **Pretreatment Requirements**

(1) This Order includes the Discharger's Pretreatment Program as previously submitted to this Regional Board. Any change to the Program shall be reported to the Regional Board in writing and shall not become effective until approved by the Executive Officer in accordance with procedures established in 40 C.F.R. 403.18.

(2) The Discharger shall enforce the requirements promulgated under Sections 307(b), 307(c), 307(d), and 402(b) of the Federal Clean Water Act with timely, appropriate, and effective enforcement actions. The Discharger shall require industrial users to comply with Federal Categorical Standards and shall initiate enforcement actions against those users who do not comply with the standards. The Discharger shall require industrial users subject to the Federal Categorical Standards to achieve compliance no later than the date specified in those requirements or, in the case of a new industrial user, upon commencement of the discharge.

(3) The Discharger shall perform the pretreatment functions as required in Federal Regulations 40 C.F.R. Part 403 including, but not limited to:

A. Implement the necessary legal authorities as provided in 40 C.F.R. 403.8(f)(1);

B. Enforce the pretreatment requirements under 40 C.F.R. 403.5 and 403.6;

C. Implement the programmatic functions as provided in 40 C.F.R. 403.8(f)(2); and

D. Provide the requisite funding of personnel to implement the Pretreatment Program as provided in 40 C.F.R. 403.8(f)(3).

(4) The Discharger shall submit semiannual and annual reports to the Regional Board, with copies to the State Board and USEPA Region 9, describing the Discharger's pretreatment activities over the period. The annual and semiannual reports shall contain, but not be limited to, the information required in the attached *Pretreatment Reporting Requirements* (Attachment J), or an approved revised version thereof. If the Discharger is not in compliance with any conditions or requirements of this Order, the Discharger shall include the reasons for noncompliance and shall state how and when the Discharger will comply with such conditions and requirements.

(5) The Discharger shall be responsible and liable for the performance of all control authority pretreatment requirements contained in 40 C.F.R. Part 403, including subsequent regulatory revisions thereof. Where Part 403 or subsequent revision places mandatory actions upon the Discharger as Control Authority but does not specify a timetable for completion of the actions, the

Discharger shall complete the required actions within six months from the effective date of this Order or the effective date of Part 403 revisions, whichever comes later. For violations of pretreatment requirements, the Discharger shall be subject to enforcement actions, penalties, fines, and other remedies by the Regional Board, USEPA, or other appropriate parties, as provided in the Federal Clean Water Act. The Regional Board or USEPA may initiate enforcement action against an industrial user for noncompliance with acceptable standards and requirements as provided in the Federal Clean Water Act and/or the California Water Code.

~~9.~~c. The Discharger's collection system is part of the system that is subject to this Order. As such, the Discharger must properly operate and maintain its collection system (40 C.F.R. §122.41(e)). The Discharger must report any non-compliance (40 C.F.R. §122.41(l) subsections (6) and (7)) and mitigate any discharge from the collection system in violation of this Order (40 C.F.R. §122.41(d)). See Attachment D, subsections I.D, V.E, V.H, and I.C., and the following section (Spill Reporting Requirements) of this Order.

6. Other Special Provisions

A. Notification

Although State and Regional Water Board staff do not have duties as first responders, this requirement is an appropriate mechanism to ensure that the agencies that do have first responder duties are notified in a timely manner in order to protect public health and beneficial uses. For certain spills, overflows and bypasses, the Discharger shall make notifications as required below:

a. For any discharges of sewage that result in discharges to a drainage channel or a surface water, the Discharger shall, as soon as possible, but no later than two (2) hours after becoming aware of the discharge, notify the State Office of Emergency Services, the local health officer or directors of environmental health with jurisdiction over affected water bodies and the Regional Water Quality Control Board.

b. As soon as possible, but no later than twenty-four (24) hours after becoming aware of a discharge to a drainage channel or a surface water, the Discharger shall submit to the Regional Water Quality Control Board a certification that the State Office of Emergency Services and the local health officer or directors of environmental health with jurisdiction over the affected water bodies have been notified of the discharge.

B. Monitoring

For certain spills, overflows and bypasses, the Discharger shall monitor as required below:

a. To define the geographical extent of spill's impact the Discharger shall obtain grab samples (if feasible, accessible, and safe) for spills, overflows or bypasses of any volume that reach receiving waters. The Discharger shall analyze the samples for total and fecal coliforms or E. coli, and enterococcus, and relevant pollutants of concern, upstream and downstream of the point of entry of the spill (if feasible, accessible and safe). This monitoring shall be done on a daily basis from time the spill is known until the results of two consecutive sets of bacteriological monitoring indicate the return to the background level or the County Department of Health Services authorizes cessation of monitoring.

~~c.~~b. The Discharger shall obtain a grab sample (if feasible, accessible, and safe) for spills, overflows or bypasses of any volume that flowed to receiving waters, entered a shallow ground water aquifer, or have the potential for public exposure; and for all spills, overflows or bypasses of 1,000 gallons or more. The Discharger shall characterize the sample for total and fecal coliforms or E. coli, and enterococcus, and analyze relevant pollutants of concern depending on the area and nature of spills or overflows if feasible, accessible and safe.

C. **Reporting**

The Regional Water Board initial notification shall be followed by:

a. A written preliminary report five working days after disclosure of the incident (submission to the Regional Water Board of the log number of the Sanitary Sewer Overflow database entry shall satisfy this requirement). Within 30 days after submitting the preliminary report, the Discharger shall submit the final written report to this Regional Water Board. (A copy of the final written report, for a given incident, already submitted pursuant to a Statewide General Waste Discharge Requirements for Wastewater Collection System Agencies, may be submitted to the Regional Water Board to satisfy this requirement.) The written report shall document the information required in paragraph D. below, monitoring results and any other information required in provisions of the Standard Provisions document including corrective measures implemented or proposed to be implemented to prevent/minimize future occurrences. The Executive Officer for just cause can grant an extension for submittal of the final written report.

b. The Discharger shall include a certification in the annual summary report (due according to the schedule in the Monitoring and Reporting Program) stating that the sewer system emergency equipment, including alarm systems, backup pumps, standby power generators, and other critical emergency pump station components were maintained and tested in accordance with the Discharger's Preventative Maintenance Plan. Any deviations from or modifications to the Plan shall be discussed.

~~B.~~D. Records

The Discharger shall develop and maintain a record of all spills, overflows or bypasses of raw or partially treated sewage from its collection system or treatment plant. This record shall be made available to the Regional Water Board upon request and a spill summary shall be included in the annual summary report. The records shall contain:

a. the date and time of each spill, overflow or bypass;

b. the location of each spill, overflow or bypass;

c. the estimated volume of each spill, overflow or bypass including gross volume, amount recovered and amount not recovered, monitoring results as required by Section VI.C.6.B;

d. the cause of each spill, overflow or bypass;

e. whether each spill, overflow or bypass entered a receiving water and, if so, the name of the water body and whether it entered via storm drains or other man-made conveyances;

f. mitigation measures implemented; and,

g. corrective measures implemented or proposed to be implemented to prevent/minimize future occurrences.

~~C.~~E. Activities Coordination

In addition, Regional Board expects that the POTW's owners/operators will coordinate their compliance activities for consistency and efficiency with other entities that have responsibilities to implement: (i) this NPDES permit, including the Pretreatment Program, (ii) a MS4 NPDES permit that may contain spill prevention, sewer maintenance, reporting requirements and (iii) the SSO WDR.

~~D.~~F. Consistency with Sanitary Sewer Overflows WDRs

The Clean Water Act prohibits the discharge of pollutants from point sources to surface waters of the United States unless authorized under an NPDES permit. (33 U.S.C. §§1311, 1342). The State Water Board adopted General Waste Discharge Requirements (WDRs) for Sanitary Sewer Systems, (WQ Order No. 2006-0003) on May 2, 2006, to provide a consistent, statewide regulatory approach to address Sanitary Sewer Overflows (SSOs). The SSOs WDR requires public agencies that own or operate sanitary sewer systems to develop and implement sewer system management plans and report all SSOs to the State Water Board's online SSOs database.

The requirements contained in this Order in Sections VI.C.3.b. (Spill Contingency Plan Section), VI.C.4. (Construction, Operation and Maintenance Specifications Section), and VI.C.6. (Spill Reporting Requirements) are intended to be consistent with the requirements of the SSOs WDR. The Regional Board recognizes that there may be some overlap between the NPDES permit provisions and SSOs WDR requirements. The requirements of the SSOs WDR are considered the minimum thresholds (see Finding 11 of WQ Order No. 2006-0003). The Regional Board will accept the documentation prepared by the Permittees under the SSOs WDR for compliance purposes, as satisfying the requirements in Sections VI.C.3.b., VI.C.4., and VI.C.6. provided any more specific or stringent provisions enumerated in this Order, have also been addressed.

~~E.~~G. The Discharger shall provide standby or emergency power facilities and/or storage capacity or other means so that in the event of plant upset or outage due to power failure or other cause, discharge of raw or inadequately treated sewage does not occur.

7. Compliance Schedules

The compliance schedules and the interim limits in Section IV.A.3. of this Order are authorized under TMDLs (Basin Plan Amendments) which have been adopted by the Los Angeles Regional Board and approved by USEPA. However, interim limits and compliance schedules may be provided in an administratively issued Time Schedule Order if the permit effective date precedes the TMDL effective date. The stakeholders in the Calleguas Creek Watershed are embarking on a watershed-wide solution to salt management, which will include reverse osmosis treatment of potable water and construction of a brine line for brine disposal. The dischargers need time to complete the capital improvement projects. The *Calleguas Creek Watershed Salts TMDL* includes tasks and milestone dates for the various phases of the project.

8. TMDL-related Tasks

The Discharger shall comply with the applicable TMDL-related tasks, and future revisions thereto, in Attachment K of this Order.

VII. COMPLIANCE DETERMINATION

Compliance with the effluent limitations contained in section IV of this Order will be determined as specified below:

A. General.

Compliance with effluent limitations for priority pollutants shall be determined using sample reporting protocols defined in the MRP and Attachment A of this Order. For purposes of reporting and administrative enforcement by the Regional and State Water

Boards, the Discharger shall be deemed out of compliance with effluent limitations if the concentration of the priority pollutant in the monitoring sample is greater than the effluent limitation and greater than or equal to the reporting level (RL).

B. Multiple Sample Data.

When determining compliance with an AMEL for priority pollutants and more than one sample result is available, the Discharger shall compute the arithmetic mean unless the data set contains one or more reported determinations of "Detected, but Not Quantified" (DNQ) or "Not Detected" (ND). In those cases, the Discharger shall compute the median in place of the arithmetic mean in accordance with the following procedure:

1. The data set shall be ranked from low to high, ranking the reported ND determinations lowest, DNQ determinations next, followed by quantified values (if any). The order of the individual ND or DNQ determinations is unimportant.

2. The median value of the data set shall be determined. If the data set has an odd number of data points, then the median is the middle value. If the data set has an even number of data points, then the median is the average of the two values around the middle unless one or both of the points are ND or DNQ, in which case the median value shall be the lower of the two data points where DNQ is lower than a value and ND is lower than DNQ.

C. Average Monthly Effluent Limitation (AMEL).

If the average (or when applicable, the median determined by subsection B above for multiple sample data) of daily discharges over a calendar month exceeds the AMEL for a given parameter, this will represent a single alleged violation, though the Discharger may be considered out of compliance for each day of that month for that parameter (e.g., resulting in 31 days of non-compliance in a 31-day month). If only a single sample is taken during the calendar month and the analytical result for that sample exceeds the AMEL, the Discharger may be considered out of compliance for that calendar month. The Discharger will only be considered out of compliance for days when the discharge occurs. For any one calendar month during which no sample (daily discharge) is taken, no compliance determination can be made for that calendar month with respect to the AMEL.

If the analytical result of a single sample, monitored monthly, quarterly, semiannually, or annually, does not exceed the AMEL for a given parameter, the Discharger will have demonstrated compliance with the AMEL for each day of that month for that parameter.

If the analytical result of any single sample, monitored monthly, quarterly, semiannually, or annually, exceeds the AMEL for any parameter, the Discharger shall collect up to four additional samples within the same calendar month. All analytical results shall be reported in the monitoring report for that month. The concentration of pollutant (an arithmetic mean or a median) in these samples estimated from the "Multiple Sample Data Reduction" Section above, will be used for compliance determination.

In the event of noncompliance with an AMEL, the sampling frequency for that parameter shall be increased to weekly and shall continue at this level until compliance with the AMEL has been demonstrated.

D. Average Weekly Effluent Limitation (AWEL).

If the average (or when applicable, the median determined by subsection B above for multiple sample data) of daily discharges over a calendar week exceeds the AWEL for a given parameter, this will represent a single alleged violation, though the Discharger may be considered out of compliance for each day of that week for that parameter, resulting in 7 days of non-compliance. If only a single sample is taken during the calendar week and the analytical result for that sample exceeds the AWEL, the Discharger may be considered out of compliance for that calendar week. The Discharger will only be considered out of compliance for days when the discharge occurs. For any one calendar week during which no sample (daily discharge) is taken, no compliance determination can be made for that calendar week with respect to the AWEL.

E. Maximum Daily Effluent Limitation (MDEL).

If a daily discharge exceeds the MDEL for a given parameter, the Discharger may be considered out of compliance for that parameter for that 1 day only within the reporting period. For any 1 day during which no sample is taken, no compliance determination can be made for that day with respect to the MDEL.

F. Instantaneous Minimum Effluent Limitation.

If the analytical result of a single grab sample is lower than the instantaneous minimum effluent limitation for a parameter, the Discharger may be considered out of compliance for that parameter for that single sample. Non-compliance for each sample will be considered separately (e.g., the results of two grab samples taken within a calendar day that both are lower than the instantaneous minimum effluent limitation would result in two instances of non-compliance with the instantaneous minimum effluent limitation).

G. Instantaneous Maximum Effluent Limitation.

If the analytical result of a single grab sample is higher than the instantaneous maximum effluent limitation for a parameter, the Discharger may be considered out of compliance for that parameter for that single sample. Non-compliance for each sample will be considered separately (e.g., the results of two grab samples taken within a calendar day that both exceed the instantaneous maximum effluent limitation would result in two instances of non-compliance with the instantaneous maximum effluent limitation).

H. Six-month Median Effluent Limitation.

If the median of daily discharges over any 180-day period exceeds the six-month median effluent limitation for a given parameter, an alleged violation will be flagged and the discharger may be considered out of compliance for each day of that 180-day period for that parameter. The next assessment of compliance will occur after the next sample is taken. If only a single sample is taken during a given 180-day period and the analytical result for that sample exceeds the six-month median, the discharger may be considered out of compliance for the 180-day period. For any 180-period during which no sample is taken, no compliance determination can be made for the six-month median effluent limitation.

I. Percent Removal.

The average monthly percent removal is the removal efficiency expressed in percentage across a treatment plant for a given pollutant parameter, as determined from the 30-day average values of pollutant concentrations (C in mg/L) of influent and effluent samples collected at about the same time using the following equation:
Percent Removal (%) = $[1-(C_{Effluent}/ C_{Influent})] \times 100$ %
When preferred, the Discharger may substitute mass loadings and mass emissions for the concentrations.

J. Mass and Concentration Limitations

Compliance with mass and concentration effluent limitations for the same parameter shall be determined separately with their respective limitations. When the concentration of a constituent in an effluent sample is determined to be ND or DNQ, the corresponding mass emission rate determined from that sample concentration shall also be reported as ND or DNQ.

K. Compliance with single constituent effluent limitations

Dischargers may be considered out of compliance with the effluent limitation if the concentration of the pollutant (see Section B "Multiple Sample Data Reduction" above) in the monitoring sample is greater than the effluent limitation and greater than or equal to the Reporting Level (RL).

L. Compliance with effluent limitations expressed as a sum of several constituents

Dischargers are out of compliance with an effluent limitation which applies to the sum of a group of chemicals (e.g., PCB's) if the sum of the individual pollutant concentrations is greater than the effluent limitation. Individual pollutants of the group will be considered to have a concentration of zero if the constituent is reported as ND or DNQ.

M. Mass Emission Rate.

The mass emission rate shall be obtained from the following calculation for any calendar day:

$$\text{Mass emission rate (lb/day)} = \frac{8.34}{N}\sum_{i=1}^{N} Q_i C_i$$

$$\text{Mass emission rate (kg/day)} = \frac{3.79}{N}\sum_{i=1}^{N} Q_i C_i$$

in which 'N' is the number of samples analyzed in any calendar day. 'Qi' and 'Ci' are the flow rate (MGD) and the constituent concentration (mg/L), respectively, which are associated with each of the 'N' grab samples, which may be taken in any calendar day. If a composite sample is taken, 'Ci' is the concentration measured in the composite sample and 'Qi' is the average flow rate occurring during the period over which samples are composited.

The daily concentration of all constituents shall be determined from the flow-weighted average of the same constituents in the combined waste streams as follows:

$$\text{Daily concentration} = \frac{1}{Q_t}\sum_{i=1}^{N} Q_i C_i$$

in which 'N' is the number of component waste streams. 'Qi' and 'Ci' are the flow rate (MGD) and the constituent concentration (mg/L), respectively, which are associated with each of the 'N' waste streams. 'Qt' is the total flow rate of the combined waste streams.

N. Bacterial Standards and Analysis.

1. The geometric mean used for determining compliance with bacterial standards is calculated with the following equation:

   $$\text{Geometric Mean} = (C1 \times C2 \times \ldots \times Cn)^{1/n}$$

   where n is the number of days samples were collected during the period and C is the concentration of bacteria (MPN/100 mL or CFU/100 mL) found on each day of sampling.

2. For bacterial analyses, sample dilutions should be performed so the expected range of values is bracketed (for example, with multiple tube fermentation method or membrane filtration method, 2 to 16,000 per 100 ml for total and fecal coliform, at a minimum, and 1 to 1000 per 100 ml for enterococcus). The detection methods used for each analysis shall be reported with the results of the analyses.

3. Detection methods used for coliforms (total and fecal) shall be those presented in Table 1A of 40 C.F.R. part 136 (revised March 12, 2007), unless alternate methods have been approved by USEPA pursuant to 40 C.F.R. part 136, or improved methods have been determined by the Executive Officer and/or USEPA.

4. Detection methods used for enterococcus shall be those presented in Table 1A of 40 C.F.R. part 136 (revised March 12, 2007) or in the USEPA publication EPA 600/4-85/076, *Test Methods for Escherichia coli and Enterococci in Water By Membrane Filter Procedure* or any improved method determined by the Executive Officer and/or USEPA to be appropriate.

O. Single Operational Upset

A single operational upset (SOU) that leads to simultaneous violations of more than one pollutant parameter shall be treated as a single violation and limits the Discharger's liability in accordance with the following conditions:

1. A single operational upset is broadly defined as a single unusual event that temporarily disrupts the usually satisfactory operation of a system in such a way that it results in violation of multiple pollutant parameters.

2. A Discharger may assert SOU to limit liability only for those violations which the Discharger submitted notice of the upset as required in Provision V.E.2(b) of Attachment D – Standard Provisions.

3. For purposes outside of California Water Code section 13385, subdivisions (h) and (i), determination of compliance and civil liability (including any more specific definition of SOU, the requirements for Dischargers to assert the SOU limitation of liability, and the manner of counting violations) shall be in accordance with USEPA Memorandum "Issuance of Guidance Interpreting Single Operational Upset" (September 27, 1989).

4. For purposes of California Water Code section 13385, subdivisions (h) and (i), determination of compliance and civil liability (including any more specific definition of SOU, the requirements for Dischargers to assert the SOU limitation of liability, and the manner of counting violations) shall be in accordance with California Water Code section 13385(f)(2).

ATTACHMENT A – DEFINITIONS

Arithmetic Mean (μ), also called the average, is the sum of measured values divided by the number of samples. For ambient water concentrations, the arithmetic mean is calculated as follows:

Arithmetic mean = $\mu = \Sigma x / n$ where: Σx is the sum of the measured ambient water concentrations, and n is the number of samples.

Average Monthly Effluent Limitation (AMEL): the highest allowable average of daily discharges over a calendar month, calculated as the sum of all daily discharges measured during a calendar month divided by the number of daily discharges measured during that month.

Average Weekly Effluent Limitation (AWEL): the highest allowable average of daily discharges over a calendar week (Sunday through Saturday), calculated as the sum of all daily discharges measured during a calendar week divided by the number of daily discharges measured during that week.

Bioaccumulative pollutants are those substances taken up by an organism from its surrounding medium through gill membranes, epithelial tissue, or from food and subsequently concentrated and retained in the body of the organism.

Carcinogenic pollutants are substances that are known to cause cancer in living organisms.

Coefficient of Variation (CV) is a measure of the data variability and is calculated as the estimated standard deviation divided by the arithmetic mean of the observed values.

Daily Discharge: Daily Discharge is defined as either: (1) the total mass of the constituent discharged over the calendar day (12:00 am through 11:59 pm) or any 24-hour period that reasonably represents a calendar day for purposes of sampling (as specified in the permit), for a constituent with limitations expressed in units of mass or; (2) the unweighted arithmetic mean measurement of the constituent over the day for a constituent with limitations expressed in other units of measurement (e.g., concentration).

The daily discharge may be determined by the analytical results of a composite sample taken over the course of one day (a calendar day or other 24-hour period defined as a day) or by the arithmetic mean of analytical results from one or more grab samples taken over the course of the day.

For composite sampling, if 1 day is defined as a 24-hour period other than a calendar day, the analytical result for the 24-hour period will be considered as the result for the calendar day in which the 24-hour period ends.

Detected, but Not Quantified (DNQ) are those sample results less than the RL, but greater than or equal to the laboratory's MDL.

Dilution Credit is the amount of dilution granted to a discharge in the calculation of a water quality-based effluent limitation, based on the allowance of a specified mixing zone. It is calculated from the dilution ratio or determined through conducting a mixing zone study or modeling of the discharge and receiving water.

Effluent Concentration Allowance (ECA) is a value derived from the water quality criterion/objective, dilution credit, and ambient background concentration that is used, in conjunction with the coefficient of variation for the effluent monitoring data, to calculate a long-term average (LTA) discharge concentration. The ECA has the same meaning as waste load allocation (WLA) as used in USEPA guidance (Technical Support Document For Water Quality-based Toxics Control, March 1991, second printing, EPA/505/2-90-001).

Enclosed Bays means indentations along the coast that enclose an area of oceanic water within distinct headlands or harbor works. Enclosed bays include all bays where the narrowest distance between the headlands or outermost harbor works is less than 75 percent of the greatest dimension of the enclosed portion of the bay. Enclosed bays include, but are not limited to, Humboldt Bay, Bodega Harbor, Tomales Bay, Drake's Estero, San Francisco Bay, Morro Bay, Los Angeles-Long Beach Harbor, Upper and Lower Newport Bay, Mission Bay, and San Diego Bay. Enclosed bays do not include inland surface waters or ocean waters.

Estimated Chemical Concentration is the estimated chemical concentration that results from the confirmed detection of the substance by the analytical method below the ML value.

Estuaries means waters, including coastal lagoons, located at the mouths of streams that serve as areas of mixing for fresh and ocean waters. Coastal lagoons and mouths of streams that are temporarily separated from the ocean by sandbars shall be considered estuaries. Estuarine waters shall be considered to extend from a bay or the open ocean to a point upstream where there is no significant mixing of fresh water and seawater. Estuarine waters included, but are not limited to, the Sacramento-San Joaquin Delta, as defined in Water Code section 12220, Suisun Bay, Carquinez Strait downstream to the Carquinez Bridge, and appropriate areas of the Smith, Mad, Eel, Noyo, Russian, Klamath, San Diego, and Otay rivers. Estuaries do not include inland surface waters or ocean waters.

Inland Surface Waters are all surface waters of the State that do not include the ocean, enclosed bays, or estuaries.

Instantaneous Maximum Effluent Limitation: the highest allowable value for any single grab sample or aliquot (i.e., each grab sample or aliquot is independently compared to the instantaneous maximum limitation).

Instantaneous Minimum Effluent Limitation: the lowest allowable value for any single grab sample or aliquot (i.e., each grab sample or aliquot is independently compared to the instantaneous minimum limitation).

Maximum Daily Effluent Limitation (MDEL) means the highest allowable daily discharge of a pollutant, over a calendar day (or 24-hour period). For pollutants with limitations expressed in units of mass, the daily discharge is calculated as the total mass of the pollutant discharged over the day. For pollutants with limitations expressed in other units of measurement, the daily discharge is calculated as the arithmetic mean measurement of the pollutant over the day.

Median is the middle measurement in a set of data. The median of a set of data is found by first arranging the measurements in order of magnitude (either increasing or decreasing order). If the number of measurements (n) is odd, then the median = $X_{(n+1)/2}$. If n is even, then the median = $(X_{n/2} + X_{(n/2)+1})/2$ (i.e., the midpoint between the $n/2$ and $n/2+1$).

Method Detection Limit (MDL) is the minimum concentration of a substance that can be measured and reported with 99 percent confidence that the analyte concentration is greater than zero, as defined in title 40 of the Code of Federal Regulations, Part 136, Attachment B, revised as of July 3, 1999.

Minimum Level (ML) is the concentration at which the entire analytical system must give a recognizable signal and acceptable calibration point. The ML is the concentration in a sample that is equivalent to the concentration of the lowest calibration standard analyzed by a specific analytical procedure, assuming that all the method specified sample weights, volumes, and processing steps have been followed.

Mixing Zone is a limited volume of receiving water that is allocated for mixing with a wastewater discharge where water quality criteria can be exceeded without causing adverse effects to the overall water body.

Not Detected (ND) are those sample results less than the laboratory's MDL.

Ocean Waters are the territorial marine waters of the State as defined by California law to the extent these waters are outside of enclosed bays, estuaries, and coastal lagoons. Discharges to ocean waters are regulated in accordance with the State Water Board's California Ocean Plan.

Persistent pollutants are substances for which degradation or decomposition in the environment is nonexistent or very slow.

Pollutant Minimization Program (PMP) means waste minimization and pollution prevention actions that include, but are not limited to, product substitution, waste stream recycling, alternative waste management methods, and education of the public and businesses. The goal of the PMP shall be to reduce all potential sources of a priority pollutant(s) through pollutant minimization (control) strategies, including pollution prevention measures as appropriate, to maintain the effluent concentration at or below the water quality-based effluent limitation. Pollution prevention measures may be particularly appropriate for persistent bioaccumulative priority pollutants where there is evidence that beneficial uses are being impacted. The Regional Water Board may consider cost effectiveness when establishing the requirements of a PMP. The completion and implementation of a Pollution Prevention Plan, if

required pursuant to Water Code section 13263.3(d), shall be considered to fulfill the PMP requirements.

Pollution Prevention means any action that causes a net reduction in the use or generation of a hazardous substance or other pollutant that is discharged into water and includes, but is not limited to, input change, operational improvement, production process change, and product reformulation (as defined in California Water Code section 13263.3). Pollution prevention does not include actions that merely shift a pollutant in wastewater from one environmental medium to another environmental medium, unless clear environmental benefits of such an approach are identified to the satisfaction of the State or Regional Water Board.

Reporting Level (RL) is the ML (and its associated analytical method) chosen by the Discharger for reporting and compliance determination from the MLs included in this Order. The MLs included in this Order correspond to approved analytical methods for reporting a sample result that are selected by the Regional Water Board either from Appendix 4 of the SIP in accordance with section 2.4.2 of the SIP or established in accordance with section 2.4.3 of the SIP. The ML is based on the proper application of method-based analytical procedures for sample preparation and the absence of any matrix interferences. Other factors may be applied to the ML depending on the specific sample preparation steps employed. For example, the treatment typically applied in cases where there are matrix-effects is to dilute the sample or sample aliquot by a factor of ten. In such cases, this additional factor must be applied to the ML in the computation of the RL.

Satellite Collection System is the portion, if any, of a sanitary sewer system owned or operated by a different public agency than the agency that owns and operates the wastewater treatment facility that a sanitary sewer system is tributary to.

Source of Drinking Water is any water designated as municipal or domestic supply (MUN) in a Regional Water Board Basin Plan.

Standard Deviation (σ) is a measure of variability that is calculated as follows:

$$\sigma = (\sum[(x - \mu)^2]/(n - 1))^{0.5}$$

where:

x is the observed value;

μ is the arithmetic mean of the observed values; and

n is the number of samples.

Toxicity Reduction Evaluation (TRE) is a study conducted in a step-wise process designed to identify the causative agents of effluent or ambient toxicity, isolate the sources of toxicity, evaluate the effectiveness of toxicity control options, and then confirm the reduction in toxicity. The first steps of the TRE consist of the collection of data relevant to the toxicity, including additional toxicity testing, and an evaluation of facility operations and maintenance practices, and best management practices. A Toxicity Identification Evaluation (TIE) may be required as part of the TRE, if appropriate. (A TIE is a set of procedures to identify the specific chemical(s) responsible for toxicity. These procedures are performed in three phases (characterization, identification, and confirmation) using aquatic organism toxicity tests.)

ATTACHMENT B – MAP

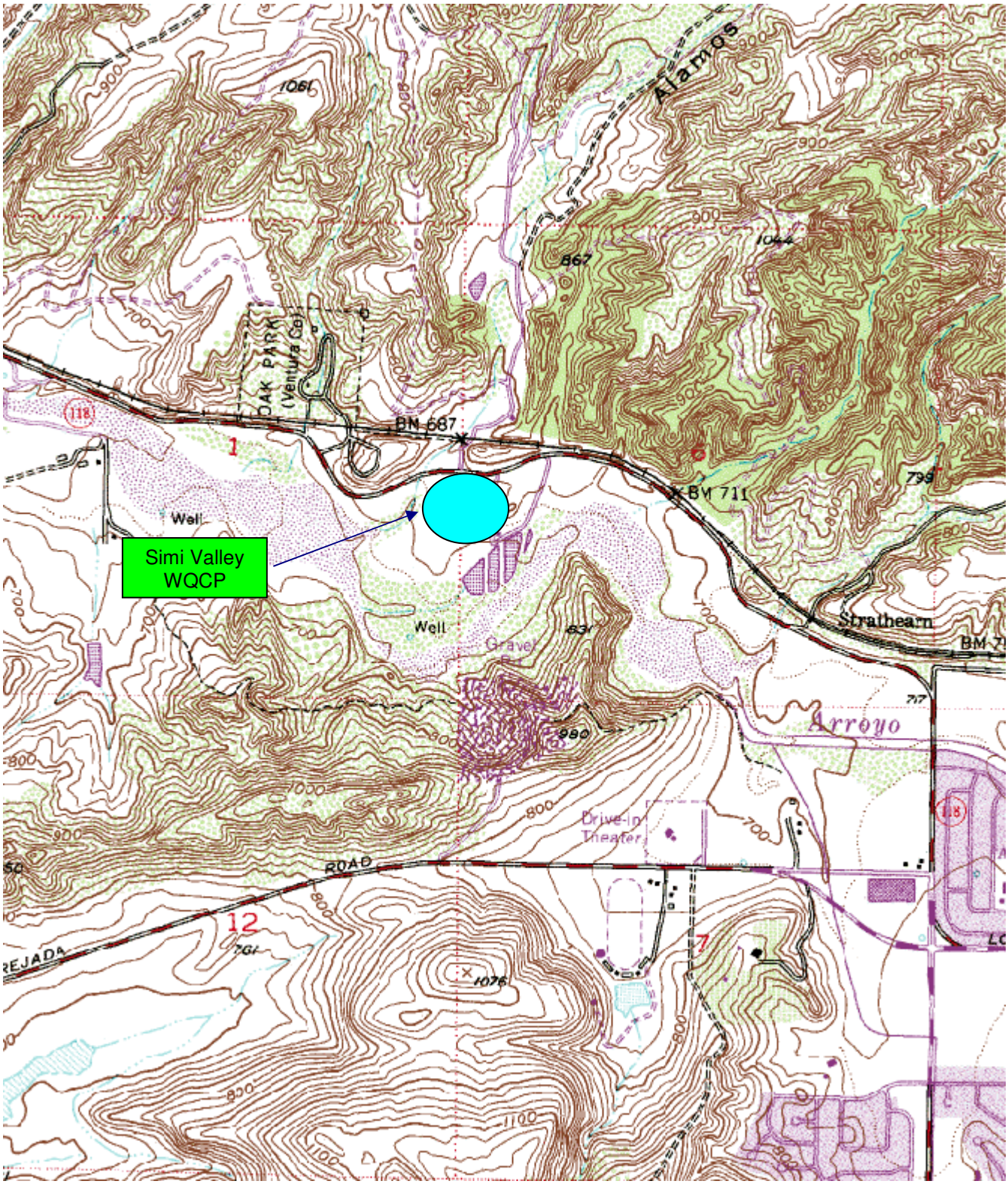

ATTACHMENT C – FLOW SCHEMATIC

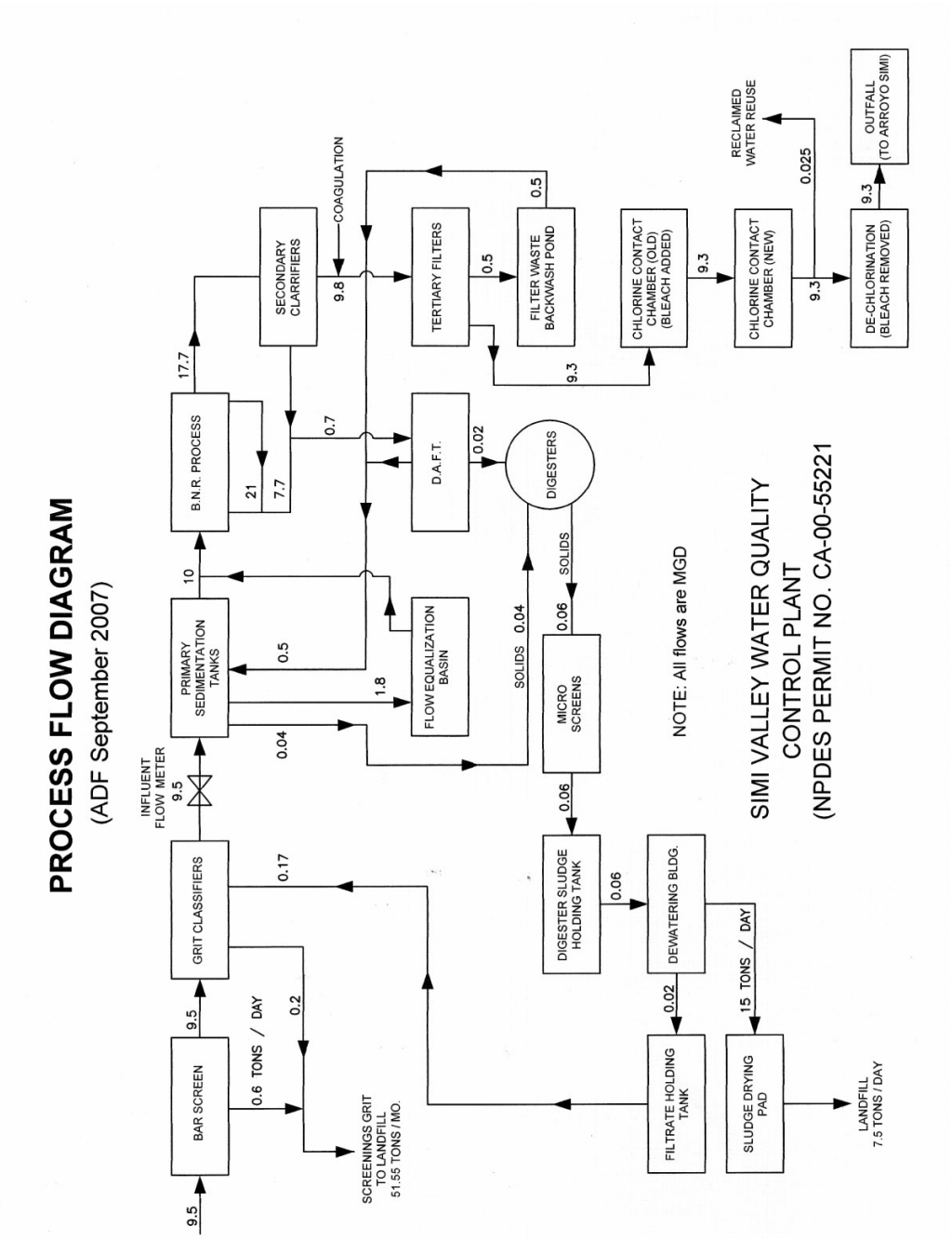

ATTACHMENT D –STANDARD PROVISIONS

I. STANDARD PROVISIONS – PERMIT COMPLIANCE

A. Duty to Comply

1. The Discharger must comply with all of the conditions of this Order. Any noncompliance constitutes a violation of the Clean Water Act (CWA) and the California Water Code and is grounds for enforcement action, for permit termination, revocation and reissuance, or modification; or denial of a permit renewal application. (40 C.F.R. §122.41(a).)

2. The Discharger shall comply with effluent standards or prohibitions established under Section 307(a) of the CWA for toxic pollutants and with standards for sewage sludge use or disposal established under Section 405(d) of the CWA within the time provided in the regulations that establish these standards or prohibitions, even if this Order has not yet been modified to incorporate the requirement. (40 C.F.R. §122.41(a)(1).)

B. Need to Halt or Reduce Activity Not a Defense

It shall not be a defense for a Discharger in an enforcement action that it would have been necessary to halt or reduce the permitted activity in order to maintain compliance with the conditions of this Order. (40 C.F.R. §122.41(c).)

C. Duty to Mitigate

The Discharger shall take all reasonable steps to minimize or prevent any discharge or sludge use or disposal in violation of this Order that has a reasonable likelihood of adversely affecting human health or the environment. (40 C.F.R. §122.41(d).)

D. Proper Operation and Maintenance

The Discharger shall at all times properly operate and maintain all facilities and systems of treatment and control (and related appurtenances) which are installed or used by the Discharger to achieve compliance with the conditions of this Order. Proper operation and maintenance also includes adequate laboratory controls and appropriate quality assurance procedures. This provision requires the operation of backup or auxiliary facilities or similar systems that are installed by a Discharger only when necessary to achieve compliance with the conditions of this Order. (40 C.F.R. §122.41(e).)

E. Property Rights

1. This Order does not convey any property rights of any sort or any exclusive privileges. (40 C.F.R. §122.41(g).)

2. The issuance of this Order does not authorize any injury to persons or property or invasion of other private rights, or any infringement of state or local law or regulations. (40 C.F.R. §122.5(c).)

F. Inspection and Entry

The Discharger shall allow the Regional Water Board, State Water Board, United States Environmental Protection Agency (USEPA), and/or their authorized representatives (including an authorized contractor acting as their representative), upon the presentation of credentials and other documents, as may be required by law, to (40 C.F.R. §122.41(i); Wat. Code, §13383):

1. Enter upon the Discharger's premises where a regulated facility or activity is located or conducted, or where records are kept under the conditions of this Order (40 C.F.R. §122.41(i)(1));

2. Have access to and copy, at reasonable times, any records that must be kept under the conditions of this Order (40 C.F.R. §122.41(i)(2));

3. Inspect and photograph, at reasonable times, any facilities, equipment (including monitoring and control equipment), practices, or operations regulated or required under this Order (40 C.F.R. §122.41(i)(3)); and

4. Sample or monitor, at reasonable times, for the purposes of assuring Order compliance or as otherwise authorized by the CWA or the California Water Code, any substances or parameters at any location. (40 C.F.R. §122.41(i)(4).)

G. Bypass

1. Definitions

   a. "Bypass" means the intentional diversion of waste streams from any portion of a treatment facility. (40 C.F.R. §122.41(m)(1)(i).)

   b. "Severe property damage" means substantial physical damage to property, damage to the treatment facilities, which causes them to become inoperable, or substantial and permanent loss of natural resources that can reasonably be expected to occur in the absence of a bypass. Severe property damage does not mean economic loss caused by delays in production. (40 C.F.R. §122.41(m)(1)(ii).)

2. Bypass not exceeding limitations. The Discharger may allow any bypass to occur which does not cause exceedances of effluent limitations, but only if it is for essential maintenance to assure efficient operation. These bypasses are not subject to the

provisions listed in Standard Provisions – Permit Compliance I.G.3, I.G.4, and I.G.5 below. (40 C.F.R. §122.41(m)(2).)

3. Prohibition of bypass. Bypass is prohibited, and the Regional Water Board may take enforcement action against a Discharger for bypass, unless (40 C.F.R. §122.41(m)(4)(i)):

   a. Bypass was unavoidable to prevent loss of life, personal injury, or severe property damage (40 C.F.R. §122.41(m)(4)(i)(A));

   b. There were no feasible alternatives to the bypass, such as the use of auxiliary treatment facilities, retention of untreated wastes, or maintenance during normal periods of equipment downtime. This condition is not satisfied if adequate back-up equipment should have been installed in the exercise of reasonable engineering judgment to prevent a bypass that occurred during normal periods of equipment downtime or preventive maintenance (40 C.F.R. §122.41(m)(4)(i)(B)); and

   c. The Discharger submitted notice to the Regional Water Board as required under Standard Provisions – Permit Compliance I.G.5 below. (40 C.F.R. §122.41(m)(4)(i)(C).)

4. The Regional Water Board may approve an anticipated bypass, after considering its adverse effects, if the Regional Water Board determines that it will meet the three conditions listed in Standard Provisions – Permit Compliance I.G.3 above. (40 C.F.R. §122.41(m)(4)(ii).)

5. Notice

   a. Anticipated bypass. If the Discharger knows in advance of the need for a bypass, it shall submit a notice, if possible at least 10 days before the date of the bypass. (40 C.F.R. §122.41(m)(3)(i).)

   b. Unanticipated bypass. The Discharger shall submit notice of an unanticipated bypass as required in Standard Provisions - Reporting V.E below (24-hour notice). (40 C.F.R. §122.41(m)(3)(ii).)

H. Upset

Upset means an exceptional incident in which there is unintentional and temporary noncompliance with technology based permit effluent limitations because of factors beyond the reasonable control of the Discharger. An upset does not include noncompliance to the extent caused by operational error, improperly designed treatment facilities, inadequate treatment facilities, lack of preventive maintenance, or careless or improper operation. (40 C.F.R. §122.41(n)(1).)

1. Effect of an upset. An upset constitutes an affirmative defense to an action brought for noncompliance with such technology based permit effluent limitations if the requirements of Standard Provisions – Permit Compliance I.H.2 below are met. No determination made during administrative review of claims that noncompliance was caused by upset, and before an action for noncompliance, is final administrative action subject to judicial review. (40 C.F.R. §122.41(n)(2).).

2. Conditions necessary for a demonstration of upset. A Discharger who wishes to establish the affirmative defense of upset shall demonstrate, through properly signed, contemporaneous operating logs or other relevant evidence that (40 C.F.R. §122.41(n)(3)):

   a. An upset occurred and that the Discharger can identify the cause(s) of the upset (40 C.F.R. §122.41(n)(3)(i));

   b. The permitted facility was, at the time, being properly operated (40 C.F.R. §122.41(n)(3)(ii));

   c. The Discharger submitted notice of the upset as required in Standard Provisions – Reporting V.E.2.b below (24-hour notice) (40 C.F.R. §122.41(n)(3)(iii)); and

   d. The Discharger complied with any remedial measures required under Standard Provisions – Permit Compliance I.C above. (40 C.F.R. §122.41(n)(3)(iv).)

3. Burden of proof. In any enforcement proceeding, the Discharger seeking to establish the occurrence of an upset has the burden of proof. (40 C.F.R. §122.41(n)(4).)

II. STANDARD PROVISIONS – PERMIT ACTION

A. General

This Order may be modified, revoked and reissued, or terminated for cause. The filing of a request by the Discharger for modification, revocation and reissuance, or termination, or a notification of planned changes or anticipated noncompliance does not stay any Order condition. (40 C.F.R. §122.41(f).)

B. Duty to Reapply

If the Discharger wishes to continue an activity regulated by this Order after the expiration date of this Order, the Discharger must apply for and obtain a new permit. (40 C.F.R. §122.41(b).)

C. Transfers

This Order is not transferable to any person except after notice to the Regional Water Board. The Regional Water Board may require modification or revocation and reissuance of the Order to change the name of the Discharger and incorporate such other requirements as may be necessary under the CWA and the California Water Code. (40 C.F.R. §§122.41(l)(3), 122.61.)

III. STANDARD PROVISIONS – MONITORING

A. Samples and measurements taken for the purpose of monitoring shall be representative of the monitored activity. (40 C.F.R. § 122.41(j)(1).)

B. Monitoring results must be conducted according to test procedures under Part 136 or, in the case of sludge use or disposal, approved under Part 136 unless otherwise specified in Part 503 unless other test procedures have been specified in this Order. (40 C.F.R. §§ 122.41(j)(4), 122.44(i)(1)(iv).)

IV. STANDARD PROVISIONS – RECORDS

A. Except for records of monitoring information required by this Order related to the Discharger's sewage sludge use and disposal activities, which shall be retained for a period of at least five years (or longer as required by Part 503), the Discharger shall retain records of all monitoring information, including all calibration and maintenance records and all original strip chart recordings for continuous monitoring instrumentation, copies of all reports required by this Order, and records of all data used to complete the application for this Order, for a period of at least three (3) years from the date of the sample, measurement, report or application. This period may be extended by request of the Regional Water Board Executive Officer at any time. (40 C.F.R. §122.41(j)(2).)

B. Records of monitoring information shall include:

1. The date, exact place, and time of sampling or measurements (40 C.F.R. §122.41(j)(3)(i));

2. The individual(s) who performed the sampling or measurements (40 C.F.R. §122.41(j)(3)(ii));

3. The date(s) analyses were performed (40 C.F.R. §122.41(j)(3)(iii));

4. The individual(s) who performed the analyses (40 C.F.R. §122.41(j)(3)(iv));

5. The analytical techniques or methods used (40 C.F.R. §122.41(j)(3)(v)); and

6. The results of such analyses. (40 C.F.R. §122.41(j)(3)(vi).)

C. Claims of confidentiality for the following information will be denied (40 C.F.R. §122.7(b)):

1. The name and address of any permit applicant or Discharger (40 C.F.R. §122.7(b)(1)); and

2. Permit applications and attachments, permits and effluent data. (40 C.F.R. §122.7(b)(2).)

V. STANDARD PROVISIONS – REPORTING

A. Duty to Provide Information

The Discharger shall furnish to the Regional Water Board, State Water Board, or USEPA within a reasonable time, any information which the Regional Water Board, State Water Board, or USEPA may request to determine whether cause exists for modifying, revoking and reissuing, or terminating this Order or to determine compliance with this Order. Upon request, the Discharger shall also furnish to the Regional Water Board, State Water Board, or USEPA copies of records required to be kept by this Order. (40 C.F.R. §122.41(h); Wat. Code, §13267.)

B. Signatory and Certification Requirements

1. All applications, reports, or information submitted to the Regional Water Board, State Water Board, and/or USEPA shall be signed and certified in accordance with Standard Provisions – Reporting V.B.2, V.B.3, V.B.4, and V.B.5 below. (40 C.F.R. §122.41(k).)

2. All permit applications shall be signed by either a principal executive officer or ranking elected official. For purposes of this provision, a principal executive officer of a federal agency includes: (i) the chief executive officer of the agency, or (ii) a senior executive officer having responsibility for the overall operations of a principal geographic unit of the agency (e.g., Regional Administrators of USEPA). (40 C.F.R. §122.22(a)(3).).

3. All reports required by this Order and other information requested by the Regional Water Board, State Water Board, or USEPA shall be signed by a person described in Standard Provisions – Reporting V.B.2 above, or by a duly authorized representative of that person. A person is a duly authorized representative only if:

   a. The authorization is made in writing by a person described in Standard Provisions – Reporting V.B.2 above (40 C.F.R. §122.22(b)(1));

   b. The authorization specifies either an individual or a position having responsibility for the overall operation of the regulated facility or activity such as the position of plant manager, operator of a well or a well field, superintendent, position of

equivalent responsibility, or an individual or position having overall responsibility for environmental matters for the company. (A duly authorized representative may thus be either a named individual or any individual occupying a named position.) (40 C.F.R. §122.22(b)(2)); and

c. The written authorization is submitted to the Regional Water Board and State Water Board. (40 C.F.R. §122.22(b)(3).)

4. If an authorization under Standard Provisions – Reporting V.B.3 above is no longer accurate because a different individual or position has responsibility for the overall operation of the facility, a new authorization satisfying the requirements of Standard Provisions – Reporting V.B.3 above must be submitted to the Regional Water Board and State Water Board prior to or together with any reports, information, or applications, to be signed by an authorized representative. (40 C.F.R. §122.22(c).)

5. Any person signing a document under Standard Provisions – Reporting V.B.2 or V.B.3 above shall make the following certification:

   "I certify under penalty of law that this document and all attachments were prepared under my direction or supervision in accordance with a system designed to assure that qualified personnel properly gather and evaluate the information submitted. Based on my inquiry of the person or persons who manage the system or those persons directly responsible for gathering the information, the information submitted is, to the best of my knowledge and belief, true, accurate, and complete. I am aware that there are significant penalties for submitting false information, including the possibility of fine and imprisonment for knowing violations." (40 C.F.R. §122.22(d).)

C. Monitoring Reports

1. Monitoring results shall be reported at the intervals specified in the Monitoring and Reporting Program (Attachment E) in this Order. (40 C.F.R. §122.22(l)(4).)

2. Monitoring results must be reported on a Discharge Monitoring Report (DMR) form or forms provided or specified by the Regional Water Board or State Water Board for reporting results of monitoring of sludge use or disposal practices. (40 C.F.R. §122.41(l)(4)(i).)

3. If the Discharger monitors any pollutant more frequently than required by this Order using test procedures approved under Part 136 or, in the case of sludge use or disposal, approved under Part 136 unless otherwise specified in Part 503, or as specified in this Order, the results of this monitoring shall be included in the calculation and reporting of the data submitted in the DMR or sludge reporting form specified by the Regional Water Board. (40 C.F.R. §122.41(l)(4)(ii).)

4. Calculations for all limitations, which require averaging of measurements, shall utilize an arithmetic mean unless otherwise specified in this Order. (40 C.F.R. §122.41(l)(4)(iii).)

D. Compliance Schedules

Reports of compliance or noncompliance with, or any progress reports on, interim and final requirements contained in any compliance schedule of this Order, shall be submitted no later than 14 days following each schedule date. (40 C.F.R. §122.41(l)(5).)

E. Twenty-Four Hour Reporting

1. The Discharger shall report any noncompliance that may endanger health or the environment. Any information shall be provided orally within 24 hours from the time the Discharger becomes aware of the circumstances. A written submission shall also be provided to the Regional Board within five (5) days of the time the Discharger becomes aware of the circumstances. The written submission shall contain a description of the noncompliance and its cause; the period of noncompliance, including exact dates and times, and if the noncompliance has not been corrected, the anticipated time it is expected to continue; and steps taken or planned to reduce, eliminate, and prevent reoccurrence of the noncompliance. (40 C.F.R. §122.41(l)(6)(i).)

2. The following shall be included as information that must be reported within 24 hours under this paragraph (40 C.F.R. §122.41(l)(6)(ii)):

   a. Any unanticipated bypass that exceeds any effluent limitation in this Order. (40 C.F.R. §122.41(l)(6)(ii)(A).)

   b. Any upset that exceeds any effluent limitation in this Order. (40 C.F.R. §122.41(l)(6)(ii)(B).)

3. The Regional Water Board may waive the above-required written report under this provision on a case-by-case basis if an oral report has been received within 24 hours. (40 C.F.R. §122.41(l)(6)(iii).)

F. Planned Changes

The Discharger shall give notice to the Regional Water Board as soon as possible of any planned physical alterations or additions to the permitted facility. Notice is required under this provision only when (40 C.F.R. §122.41(l)(1)):

1. The alteration or addition to a permitted facility may meet one of the criteria for determining whether a facility is a new source in section 122.29(b) (40 C.F.R. §122.41(l)(1)(i)); or

2. The alteration or addition could significantly change the nature or increase the quantity of pollutants discharged. This notification applies to pollutants that are not subject to effluent limitations in this Order. (40 C.F.R. §122.41(l)(1)(ii).)

3. The alteration or addition results in a significant change in the Discharger's sludge use or disposal practices, and such alteration, addition, or change may justify the application of permit conditions that are different from or absent in the existing permit, including notification of additional use or disposal sites not reported during the permit application process or not reported pursuant to an approved land application plan. (40 C.F.R. §122.41(l)(1)(iii).)

G. Anticipated Noncompliance

The Discharger shall give advance notice to the Regional Water Board or State Water Board of any planned changes in the permitted facility or activity that may result in noncompliance with General Order requirements. (40 C.F.R. §122.41(l)(2).)

H. Other Noncompliance

The Discharger shall report all instances of noncompliance not reported under Standard Provisions – Reporting V.C, V.D, and V.E above at the time monitoring reports are submitted. The reports shall contain the information listed in Standard Provision – Reporting V.E above. (40 C.F.R. §122.41(l)(7).)

I. Other Information

When the Discharger becomes aware that it failed to submit any relevant facts in a permit application, or submitted incorrect information in a permit application or in any report to the Regional Water Board, State Water Board, or USEPA, the Discharger shall promptly submit such facts or information. (40 C.F.R. §122.41(l)(8).)

VI. STANDARD PROVISIONS – ENFORCEMENT

A. The Regional Water Board is authorized to enforce the terms of this permit under several provisions of the California Water Code, including, but not limited to, sections 13385, 13386, and 13387.

VII. ADDITIONAL PROVISIONS – NOTIFICATION LEVELS

A. Publicly-Owned Treatment Works (POTWs)

All POTWs shall provide adequate notice to the Regional Water Board of the following (40 C.F.R. §122.42(b)):

1. Any new introduction of pollutants into the POTW from an indirect discharger that would be subject to sections 301 or 306 of the CWA if it were directly discharging those pollutants (40 C.F.R. §122.42(b)(1)); and

2. Any substantial change in the volume or character of pollutants being introduced into that POTW by a source introducing pollutants into the POTW at the time of adoption of the Order. (40 C.F.R. §122.42(b)(2).)

3. Adequate notice shall include information on the quality and quantity of effluent introduced into the POTW as well as any anticipated impact of the change on the quantity or quality of effluent to be discharged from the POTW. (40 C.F.R. §122.42(b)(3).)

ATTACHMENT E – MONITORING AND REPORTING PROGRAM

Table of Contents

Attachment E – Monitoring and Reporting Program (MRP), CI-3021 ..... E-2
I. General Monitoring Provisions E-2
II. Monitoring Locations E-6
III. Influent Monitoring Requirements E-8
A. Monitoring Location INF-001 ..... E-8
IV. Effluent Monitoring Requirements E-8
A. Monitoring Location EFF-001 ..... E-9
V. Whole Effluent Toxicity Testing Requirements E-12
VI. Reclamation Monitoring Requirements E-20
VII. Receiving Water Monitoring Requirements – Surface Water E-20
A. Monitoring Location RSW-001 and RSW-002 ..... E-20
VIII. Other Monitoring Requirements E-23
IX. Reporting Requirements E-25
A. General Monitoring and Reporting Requirements E-25
B. Self Monitoring Reports (SMRs) E-26
C. Discharge Monitoring Reports (DMRs) E-28
D. Other Reports E-28

List of Tables

Table 1. Monitoring Station Locations E-6
Table 2. Influent Monitoring E-8
Table 3. Effluent Monitoring E-9
Table 4. Receiving Water Monitoring Requirements E-20
Table 5. Monitoring Periods and Reporting Schedule E-26

ATTACHMENT E – MONITORING AND REPORTING PROGRAM (MRP), CI-3021

The Code of Federal Regulations, title 40, part 122.48 requires that all NPDES permits specify monitoring and reporting requirements. California Water Code Sections 13267 and 13383 also authorize the Regional Water Quality Control Board (Regional Water Board) to require technical and monitoring reports. This MRP establishes monitoring and reporting requirements, which implement the federal and California regulations.

I. GENERAL MONITORING PROVISIONS

A. All samples shall be representative of the waste discharge under conditions of peak load. Quarterly effluent analyses shall be performed during the months of February, May, August, and November. Semiannual analyses shall be performed during the months of February and August. Annual analyses shall be performed during the month of August. Should there be instances when monitoring could not be done during these specified months, the Discharger must notify the Regional Board, state the reason why monitoring could not be conducted, and obtain approval from the Executive Officer for an alternate schedule. Results of quarterly, semiannual, and annual analyses shall be reported in the third monthly monitoring report following the analysis.

B. Pollutants shall be analyzed using the analytical methods described in 40 C.F.R. Parts 136.3, 136.4, and 136.5 (revised March 12, 2007); or where no methods are specified for a given pollutant, by methods approved by this Regional Board or the State Water Board. Laboratories analyzing effluent samples and receiving water samples shall be certified by the California Department of Public Health (CDPH), Environmental Laboratory Accreditation Program (ELAP) or approved by the Executive Officer and must include quality assurance/quality control (QA/QC) data in their reports. A copy of the laboratory certification shall be provided each time a new certification and/or renewal of the certification is obtained from ELAP.

C. Water/wastewater samples must be analyzed within allowable holding time limits as specified in 40 C.F.R. Part 136.3 (revised March 12, 2007). All QA/QC analyses must be run on the same dates that samples are actually analyzed. The Discharger shall retain the QA/QC documentation in its files and make available for inspection and/or submit them when requested by the Regional Board. Proper chain of custody procedures must be followed and a copy of that documentation shall be submitted with the monthly report.

D. The Discharger shall calibrate and perform maintenance procedures on all monitoring instruments and to insure accuracy of measurements, or shall insure that both equipment activities will be conducted.

E. For any analyses performed for which no procedure is specified in the USEPA guidelines, or in the MRP, the constituent or parameter analyzed and the method or procedure used must be specified in the monitoring report.

F. Each monitoring report must affirm in writing that "all analyses were conducted at a laboratory certified for such analyses by the Department of Public Health or approved by the Executive Officer and in accordance with current USEPA guideline procedures or as specified in this MRP."

G. The monitoring report shall specify the USEPA analytical method used, the Method Detection Limit (MDL), and the Reporting Level (RL) [the applicable minimum level (ML) or reported Minimum Level (RML)] for each pollutant. The MLs are those published by the State Board in the *Policy for the Implementation of Toxics Standards for Inland Surface Waters, Enclosed Bays, and Estuaries of California,* February 9, 2005, Appendix 4. The ML represents the lowest quantifiable concentration in a sample based on the proper application of all method-based analytical procedures and the absence of any matrix interference. When all specific analytical steps are followed and after appropriate application of method specific factors, the ML also represents the lowest standard in the calibration curve for that specific analytical technique. When there is deviation from the method analytical procedures, such as dilution or concentration of samples, other factors may be applied to the ML depending on the sample preparation. The resulting value is the reported minimum level.

H. The Discharger shall select the analytical method that provides a ML lower than the permit limit established for a given parameter, unless the Discharger can demonstrate that a particular ML is not attainable, in accordance with procedures set forth in 40 C.F.R. part 136, and obtains approval for a higher ML from the Executive Officer, as provided for in section J, below. If the effluent limitation is lower than all the MLs in Appendix 4, SIP, the Discharge must select the method with the lowest ML for compliance purposes. The Discharger shall include in the Annual Summary Report a list of the analytical methods employed for each test.

I. The Discharger shall instruct its laboratories to establish calibration standards so that the ML (or its equivalent if there is differential treatment of samples relative to calibration standards) is the lowest calibration standard. At no time is the Discharger to use analytical data derived from extrapolation beyond the lowest point of the calibration curve. In accordance with section J, below, the Discharger's laboratory may employ a calibration standard lower than the ML in Appendix 4 of the SIP.

J. In accordance with Section 2.4.3 of the SIP, the Regional Water Board Executive Officer, in consultation with the State Water Board's Quality Assurance Program Manager, may establish an ML that is not contained in Appendix 4 of the SIP to be included in the discharger's permit in any of the following situations:

a. When the pollutant under consideration is not included in Appendix 4, SIP;

b. When the discharger and the Regional Water Board agree to include in the permit a test method that is more sensitive than those specified in 40 C.F.R. part 136 (revised as of May 14, 1999);

c. When a discharger agrees to use an ML that is lower than those listed in Appendix 4;

d. When a discharger demonstrates that the calibration standard matrix is sufficiently different from that used to establish the ML in Appendix 4 and proposes an appropriate ML for the matrix; or,

e. When the discharger uses a method, which quantification practices are not consistent with the definition of the ML. Examples of such methods are USEPA-approved method 1613 for dioxins, and furans, method 1624 for volatile organic substances, and method 1625 for semi-volatile organic substances. In such cases, the discharger, the Regional Water Board, and the State Water Resources Control Board shall agree on a lowest quantifiable limit and that limit will substitute for the ML for reporting and compliance determination purposes.

If there is any conflict between foregoing provisions and the State Implementation Policy (SIP), the provisions stated in the SIP (Section 2.4) shall prevail.

K. If the Discharger samples and performs analyses (other than for process/operational control, startup, research, or equipment testing) on any influent, effluent, or receiving water constituent more frequently than required by this Program using approved analytical methods, the results of those analyses shall be included in the report. These results shall be reflected in the calculation of the average used in demonstrating compliance with this permit's limitations.

L. The Discharger shall develop and maintain a record of all spills or bypasses of raw or partially treated sewage from its collection system or treatment plant according to the requirements in the WDR section of this Order. This record shall be made available to the Regional Board upon request and a spill summary shall be included in the annual summary report.

M. For all bacteriological analyses, sample dilutions should be performed so the expected range of values is bracketed (for example, with multiple tube fermentation method or membrane filtration method, 2 to 16,000 per 100 ml for total and fecal coliform, at a minimum, and 1 to 1000 per 100 ml for enterococcus). The detection methods used for each analysis shall be reported with the results of the analyses.

a. Detection methods used for coliforms (total and fecal) shall be those presented in Table 1A of 40 C.F.R. part 136 (revised March 12, 2007), unless alternate methods have been approved in advance by the United State Environmental Protection Agency (USEPA) pursuant to 40 C.F.R. part 136.

b. Detection methods used for enterococcus shall be those presented in Table 1A of 40 C.F.R. part 136 (revised March 12, 2007) or in the USEPA publication EPA 600/4-85/076, *Test Methods for Escherichia coli and Enterococci in Water By Membrane Filter Procedure*, or any improved method determined by the Regional Water Board to be appropriate.

N. Since compliance monitoring focuses on the effects of a point source discharge, it is not designed to assess impacts from other sources of pollution (e.g., non-point source run-off, aerial fallout) or to evaluate the current status of important ecological resources on a regional basis.

The Discharger shall participate in the implementation of the Watershed-wide Monitoring Program. The City's responsibilities under the Watershed-wide Monitoring Program are described in the Receiving Water Monitoring Requirements section. To achieve the goals of the Watershed-wide Monitoring Program, revisions to the Receiving Water Monitoring Requirements will be made under the direction of USEPA and the Regional Board. The City has participated with stakeholders in the Calleguas Creek Watershed, to develop the watershed-wide monitoring program. The Discharger shall implement the watershed-wide monitoring program and shall submit quarterly progress reports detailing ongoing efforts towards the implementation of the Watershed-wide Monitoring Program. The first report should be received in the Regional Board office by ~~October~~January 15, 200~~8~~9.

Changes to the compliance monitoring program may be required to fulfill the goals of the watershed-wide monitoring program, while retaining the compliance monitoring component required to evaluate compliance with the NPDES permit. Revisions to the Discharger's program will be made under the direction of the Regional Water Board, as necessary, to accomplish the goal, and may include a reduction or increase in the number of parameters to be monitored, the frequency of monitoring, and/or the number of samples collected.

Until such time when a watershed-wide monitoring program is developed, Simi Valley WQCP shall implement the monitoring program in the following sections.

II. MONITORING LOCATIONS

The Discharger shall establish the following monitoring locations to demonstrate compliance with the effluent limitations, discharge specifications, and other requirements in this Order:

Table 1. Monitoring Station Locations

Discharge Point Name	Monitoring Location Name	Monitoring Location Description
Influent Monitoring Station		
--	INF-001	Sampling stations shall be established at each point of inflow to the sewage treatment plant and shall be located upstream of any in-plant return flows and where representative samples of the influent can be obtained.
Effluent Monitoring Stations		
001, 002	EFF-001	The effluent sampling station shall be located downstream of any in-plant return flows and after the final disinfection process, where representative samples of the effluent can be obtained.
Receiving Water Monitoring Stations		
--	RSW-001	(Upstream of Discharge Points 001 and 002). Arroyo Simi, upstream of its confluence with Brea Canyon, approximate coordinates: Latitude 34° 16' 08" North, Longitude 118° 48' 00" West. (previously W-12)
--	RSW-002	(Downstream of Discharge Points 001 and 002). Arroyo Simi, upstream of its confluence with Alamos Canyon, approximate coordinates: Latitude 34° 16' 56" North, Longitude 118° 49' 04" West. (previously W-11)

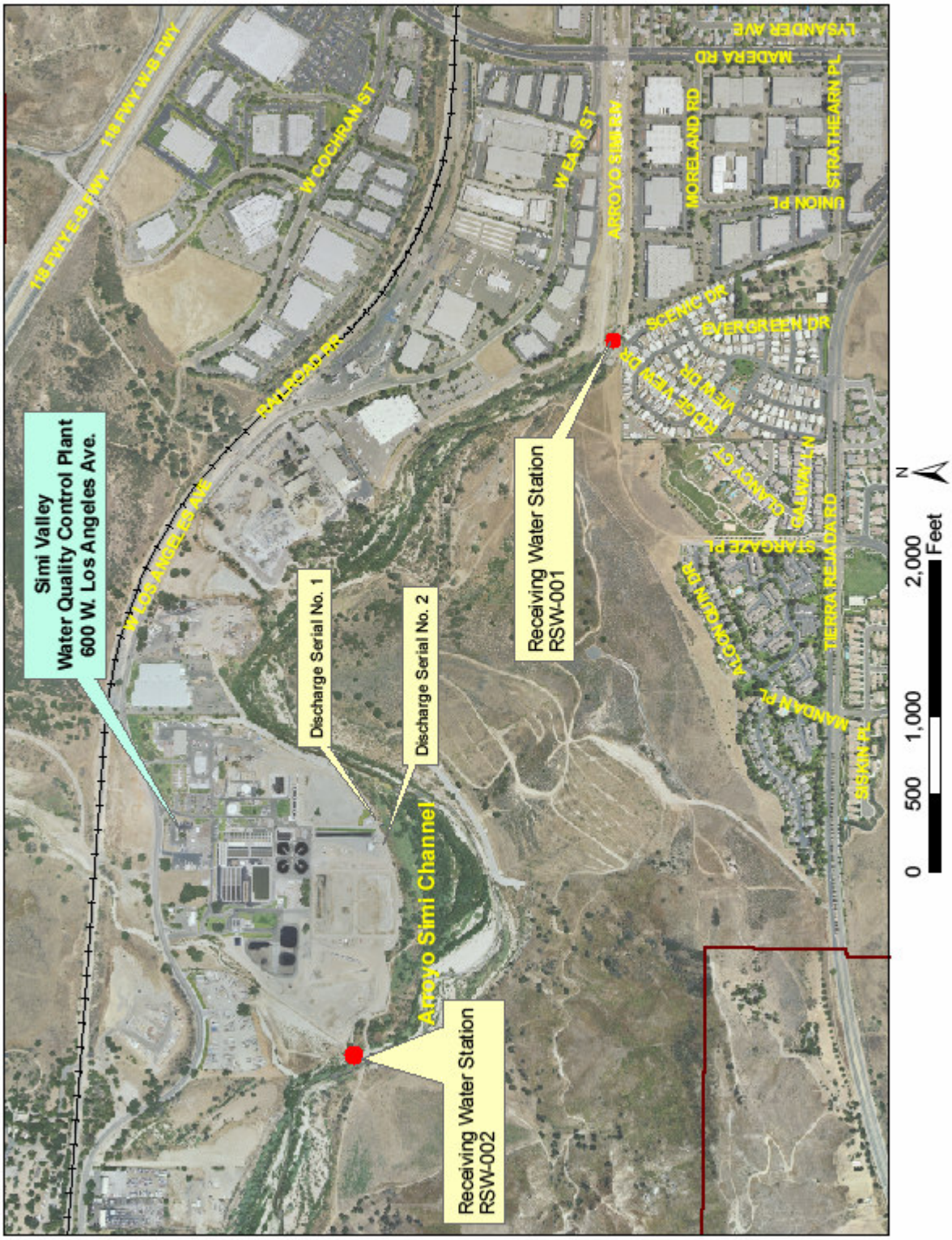

Simi Valley WQCP Receiving Water Stations

III. INFLUENT MONITORING REQUIREMENTS

Influent monitoring is required to:

~~A.~~ Determine compliance with NPDES permit conditions.
~~B.~~ Assess treatment plant performance.
~~X.~~ Assess effectiveness of the Pretreatment Program

A. Monitoring Location INF-001

1. The Discharger shall monitor influent to the facility at INF-001 as follows:

Table 2. Influent Monitoring

Parameter	Units	Sample Type	Minimum Sampling Frequency	Required Analytical Test Method
Flow	mgd	recorder	continuous[1]	[2]
pH	pH unit	grab	weekly	[2]
Total suspended solids	mg/L	24-hour composite	weekly	[2]
BOD_5 20°C	mg/L	24-hour composite	weekly	[2]
Remaining USEPA priority pollutants[3] excluding asbestos	µg/L	24-hour composite/grab for VOCs, Cyanide, and Chromium VI	semiannually	[2]

IV. EFFLUENT MONITORING REQUIREMENTS

Effluent monitoring is required to:

~~α.~~ Determine compliance with NPDES permit conditions and water quality standards.
~~β.~~ Assess plant performance, identify operational problems and improve plant performance.
~~χ.~~ Provide information on wastewater characteristics and flows for use in interpreting water quality and biological data.
~~δ.~~ Determine reasonable potential analysis for toxic pollutants.
~~ε.~~ Determine TMDL effectiveness in waste load allocation compliance.

---

[1] Total daily flow and instantaneous peak daily flow (24-hr basis). Actual monitored flow shall be reported (not the maximum flow, i.e., design capacity).

[2] Pollutants shall be analyzed using the analytical methods described in 40 C.F.R. 136; where no methods are specified for a given pollutant, by methods approved by this Regional Water Board or State Water Resources Control Board. For any pollutant whose effluent limitation is lower than all the minimum levels (MLs) specified in Attachment 4 of the SIP, the analytical method with the lowest ML must be selected.

[3] Priority pollutants are those constituents referred to in 40 C.F.R. 401.15; a list of these pollutants is provided as Appendix A to 40 C.F.R. 423.

A. Monitoring Location EFF-001

1. The Discharger shall monitor the discharge of tertiary-treated effluent at EFF-001. If more than one analytical test method is listed for a given parameter, the Discharger must select from the listed methods and corresponding Minimum Level.

Table 3. Effluent Monitoring

Parameter	Units	Sample Type	Minimum Sampling Frequency	Required Analytical Test Method and (Minimum Level, units), respectively
Total waste flow	mgd	recorder	continuous[4]	[5]
Turbidity	NTU	recorder	continuous[4]	[5]
Total residual chlorine	mg/L	recorder	continuous[6]	--
Total residual chlorine	mg/L	grab	daily[7]	[5]
Total coliform	MPN/100mL or CFU/100ml	grab	weekly	[5]
Fecal coliform	MPN/100mL or CFU/100ml	grab	weekly[8]	[5]
E. coli	MPN/100mL or CFU/100ml	grab	weekly[8]	[5]
Temperature	°F	grab	weekly	[5]
pH	pH units	grab	weekly	[5]
Settleable solids	mL/L	grab	weekly	[5]
Suspended solids	mg/L	24-hour composite	weekly	[5]
BOD_5 20°C	mg/L	24-hour composite	weekly[9]	[5]

[4] Where continuous monitoring of a constituent is required, the following shall be reported:
Total waste flow – Total daily and peak daily flow (24-hr basis);
Turbidity – Maximum daily value, total amount of time each day the turbidity exceeded 5 NTU, flow proportioned average daily value.

[5] Pollutants shall be analyzed using the analytical methods described in 40 C.F.R. 136; where no methods are specified for a given pollutant, by methods approved by this Regional Water Board or State Water Resources Control Board. For any pollutant whose effluent limitation is lower than all the minimum levels (MLs) specified in Attachment 4 of the SIP, the analytical method with the lowest ML must be selected.

[6] Total residual chlorine shall be recorded continuously. The recorded data shall be maintained by the Permittee for at least five years. The Permittee shall extract the maximum daily peak, minimum daily peak, and average daily from the recorded media and shall be made available upon request of the Regional Board. The continuous monitoring data are not intended to be used for compliance determination purposes.

[7] Daily grab samples shall be collected at monitoring location EFF-001, Monday through Friday only, except for holidays. Analytical results of daily grab samples will be used to determine compliance with total residual chlorine effluent limitation. Furthermore, additional monitoring requirements specified in section IV.A.2. shall be followed.

[8] Fecal coliform shall be conducted only if total coliform test result is positive. E. coli testing shall be conducted only if fecal coliform testing is positive. If the fecal coliform analysis results in no detection, a result of less than (<) the reporting limit for fecal coliform will be reported for E. coli.

[9] If the result of the weekly BOD analysis yields a value greater than the 30-day average limit, the frequency of analysis shall be increased to daily within one week of knowledge of the test result for at least 30

Parameter	Units	Sample Type	Minimum Sampling Frequency	Required Analytical Test Method and (Minimum Level, units), respectively
Oil and grease	mg/L	grab	quarterly	[5]
Dissolved oxygen	mg/L	grab	quarterly	[5]
Total Dissolved Solids	mg/L	24-hour composite	monthly	[5]
Sulfate	mg/L	24-hour composite	monthly	[5]
Chloride	mg/L	24-hour composite	monthly	[5]
Boron	mg/L	24-hour composite	monthly	[5]
Ammonia Nitrogen	mg/L	24-hour composite	monthly	[5]
Nitrite nitrogen	mg/L	24-hour composite	monthly	[5]
Nitrate nitrogen	mg/L	24-hour composite	monthly	[5]
Organic nitrogen	mg/L	24-hour composite	monthly	[5]
Total nitrogen	mg/L	24-hour composite	monthly	[5]
Surfactants (MBAS)	mg/L	24-hour composite	monthly	[5]
Surfactants (CTAS)	mg/L	24-hour composite	quarterly	[5]
Total hardness ($CaCO_3$)	mg/L	24-hour composite	monthly	[5]
Chronic toxicity	TUc	24-hour composite	monthly	[5]
Acute toxicity	% Survival	24-hour composite	quarterly	[5]
Radioactivity (Including gross alpha, gross beta, combined radium-226 and radium-228, tritium, strontium-90 and uranium)	PCi/L	24-hour composite	semiannually	[10]
Copper	µg/L	24-hour composite	monthly	[5]
Mercury	µg/L	24-hour composite	monthly	[5]
Nickel	µg/L	24-hour composite	monthly	[5]
Selenium	µg/L	24-hour composite	monthly	[5]
Cyanide	µg/L	grab	monthly	[5]
Bromoform	µg/L	grab	monthly	[5]
Dibromochloromethane	µg/L	grab	monthly	[5]
Chloroform	µg/L	grab	monthly	[5]
Bromodichloromethane	µg/L	grab	monthly	[5]
Chlorpyrifos	µg/L	24-hour composite	quarterly	[5]
Diazinon	µg/L	24-hour composite	quarterly	[5]
Chlordane	µg/L	24-hour composite	quarterly	[5]
4,4'-DDD	µg/L	24-hour composite	quarterly	[5]
4,4'-DDE	µg/L	24-hour composite	quarterly	[5]

days and until compliance with the 7-day and 30-day average BOD limits is demonstrated; after which the frequency shall revert to weekly.

[10] Analyze these radiochemicals by the following USEPA methods: method 900.0 for gross alpha and gross beta, method 903.0 or 903.1 for radium-226, method 904.0 for radium-228, method 906.0 for tritium, method 905.0 for strontium-90, and method 908.0 for uranium. Analysis for combined Radium-226 & 228 shall be conducted only if gross alpha results for the same sample exceed 15 pCi/L or beta greater than 50 pCi/L. If Radium-226 & 228 exceeds the stipulated criteria, analyze for Tritium, Strontium-90 and uranium.

Parameter	Units	Sample Type	Minimum Sampling Frequency	Required Analytical Test Method and (Minimum Level, units), respectively
4,4'-DDT	µg/L	24-hour composite	quarterly	[5]
Dieldrin	µg/L	24-hour composite	quarterly	[5]
PCBs[11]	µg/L	24-hour composite	quarterly	[5]
Toxaphene	µg/L	24-hour composite	quarterly	[5]
Halomethanes[12]	µg/L	grab	monthly	[5]
Antimony	µg/L	24-hour composite	semiannually	[5]
Arsenic	µg/L	24-hour composite	semiannually	[5]
Beryllium	µg/L	24-hour composite	semiannually	[5]
Cadmium	µg/L	24-hour composite	semiannually	[5]
Chromium III	µg/L	calculation	semiannually	[5]
Chromium VI	µg/L	grab	semiannually	[5]
Lead	µg/L	24-hour composite	semiannually	[5]
Silver	µg/L	24-hour composite	semiannually	[5]
Thallium	µg/L	24-hour composite	semiannually	[5]
Zinc	µg/L	24-hour composite	semiannually	[5]
2,3,7,8-TCDD[13]	µg/L	24-hour composite	semiannually	[5]
Iron	mg/L	24-hour composite	semiannually	[5]
Fluoride	mg/L	24-hour composite	semiannually	[5]
Barium	mg/L	24-hour composite	semiannually	[5]
Methoxychlor	mg/L	24-hour composite	semiannually	[5]
2,4-D	mg/L	24-hour composite	semiannually	[5]
2,4,5-TP (Silvex)	mg/L	24-hour composite	semiannually	[5]
Remaining USEPA priority pollutants[14] excluding asbestos	µg/L	24-hour composite; grab for VOCs	semiannually	[5]
Emerging chemicals[15]	µg/L	grab	semiannually	[15]

[11] PCBs is the sum of Aroclor 1016, Aroclor 1221, Aroclor 1232, Aroclor 1242, Aroclor 1248, Aroclor 1254, and Aroclor 1260.

[12] Halomethanes shall mean the sum of bromoform, bromodichloromethane, chloroform, and dibromochloromethane.

[13] In accordance with the SIP, the Discharger shall conduct effluent monitoring for the seventeen 2,3,7,8-tetrachlorodibenzo-p-dioxin (2,3,7,8-TCDD or dioxin) congeners in the effluent and in the receiving water Station RSW-002, located downstream of the discharge point. The Discharger shall use the appropriate Toxicity Equivalence Factor (TEF) to determine Toxic Equivalence (TEQ). Where TEQ equals the product between each of the 17 individual congeners' (i) concentration analytical result (C_i) and their corresponding Toxicity Equivalence Factor (TEF_i)., (i.e., $TEQ_i = C_i \times TEF_i$). Compliance with the Dioxin limitation shall be determined by the summation of the seventeen individual TEQs, or the following equation:

$$\text{Dioxin concentration in effluent} = \sum_{1}^{17}(TEQ_i) = \sum_{1}^{17}(C_i)(TEF_i)$$

[14] Priority pollutants are those constituents referred to in 40 C.F.R. 401.15; a list of these pollutants is provided as Appendix A to 40 C.F.R. 423.

Parameter	Units	Sample Type	Minimum Sampling Frequency	Required Analytical Test Method and (Minimum Level, units), respectively
Endocrine disrupting chemicals[16]	µg/L	24-hour composite	biennially	Approved by USEPA
Pharmaceuticals[17]	µg/L	grab	biennially	Approved by USEPA

2. Total Residual Chlorine Additional Monitoring

   Continuous monitoring of total residual chlorine at EFF-001 shall serve as an internal trigger for the increased grab sampling at EFF-001 if either of the following occurs, except as noted in item c:

   a. Total residual chlorine concentration excursions of up to 0.3 mg/L lasting greater than 15 minutes; or

   b. Total residual chlorine concentration peaks in excess of 0.3 mg/L lasting greater than 1 minute.

   c. Additional grab samples need not be taken if it can be demonstrated that a stoichiometrically appropriate amount of dechlorination chemical has been added to effectively dechlorinate the effluent to 0.1 mg/L or less for peaks in excess of 0.3 mg/L lasting more than 1 minute, but not for more than five minutes.

V. WHOLE EFFLUENT TOXICITY TESTING REQUIREMENTS

~~a.~~A. Acute Toxicity

1. Definition of Acute Toxicity

   Acute toxicity is a measure of primarily lethal effects that occur over a 96-hour period. Acute toxicity shall be measured in percent survival measured in undiluted (100%) effluent.

---

[15] Emerging chemicals include 1,4-dioxane (USEPA 8270c test method), perchlorate (USEPA 314 test method), 1,2,3-trichloropropane (USEPA 504.1 or 8260B test method), and methyl tert-butyl ether (USEPA 8260B test method). These chemicals shall be monitored in August.

[16] Endocrine disrupting chemicals include ethinyl estradiol, 17-B estradiol, estrone, bisphenol A, nonylphenol and nonylphenol polyethoxylate, octylphenol and octylphenol polyethoxylate, and polybrominated diphenyl ethers. These chemicals need to be monitored only when the USEPA-approved analytical methods for these chemicals are available. These chemicals shall be monitored in August.

[17] Pharmaceuticals include acetaminophen, amoxicillin, azithromycin, caffeine, carbamazepine, ciprofloxacin, ethylenediamine tetra-acetic acid (EDTA), gemfibrozil, ibuprofen, iodinated contrast media, lipitor, methadone, morphine, salicylic acid, and triclosan. These chemicals need to be monitored only when the USEPA-approved analytical methods for these chemicals are available. These chemicals shall be monitored in August.

~~a~~a. The average survival in the undiluted effluent for any three (3) consecutive 96-hour static renewal bioassay tests shall be at least 90%, and

~~b~~b. No single test shall produce less than 70% survival.

2. Acute Toxicity Effluent Monitoring Program

a. **Method.** The Discharger shall conduct acute toxicity tests on 24-hr composite 100% effluent and receiving water grab samples by methods specified in 40 C.F.R. Part 136, which cites USEPA's *Methods for Measuring the Acute Toxicity of Effluents and Receiving Waters to Freshwater and Marine Organisms*, October, 2002 (EPA-821-R-02-012) or a more recent edition to ensure compliance.

b. **Test Species.** The fathead minnow, *Pimephales promelas*, shall be used as the test species for fresh water discharges and the topsmelt, *Atherinops affinis*, shall be used as the test species for brackish discharges. However, if the salinity of the receiving water is between 1 to 32 parts per thousand (ppt), the Discharger may have the option of using the inland silverslide, *Menidia beryllina*, instead of the topsmelt. The method for topsmelt is found in USEPA's *Methods for Measuring the Acute Toxicity of Effluents and Receiving Waters to Freshwater and Marine Organisms*, October, 2002 (EPA-821-R-02-012).

c. **Alternate Reporting.** In lieu of conducting the standard acute toxicity testing with the fathead minnow, the Discharger may elect to report the results or endpoint from the first 96 hours of the chronic toxicity test as the results of the acute toxicity test, but only if the Discharger uses USEPA's October 2002 protocol (EPA-821-R-02-013) and fathead minnow is used to conduct the chronic toxicity test.

d. **Acute Toxicity Accelerated Monitoring.** If either of the effluent or receiving water acute toxicity requirements in Section IV.A.3.g.a.(i) and (ii), and Section V.A.17.c., respectively, of this Order is not met, the Discharger shall conduct six additional tests, approximately every two weeks, over a 12-week period. The Discharger shall ensure that results of a failing acute toxicity test are received by the Discharger within 24 hours of completion of the test and the additional tests shall begin within 5 business days of receipt of the result. If the additional tests indicate compliance with acute toxicity limitation, the Discharger may resume regular testing.

However, if the extent of the acute toxicity of the receiving water upstream of the discharge is greater than the downstream and the results of the effluent acute toxicity test comply with acute toxicity limitation, the accelerated monitoring need not be implemented for the receiving water.

e. **Toxicity Identification Evaluation (TIE).**

1. If the results of any two of the six accelerated tests are less than 90% survival, then the Discharger shall begin a Toxicity Identification Evaluation (TIE). The TIE shall include all reasonable steps to identify the sources of toxicity. Once the sources are identified, the Discharger shall take all reasonable steps to reduce toxicity to meet the objective.

2. If the initial test and any of the additional six acute toxicity bioassay tests results are less than 70% survival, the Discharger shall immediately implement the Initial Investigation Toxicity Reduction Evaluation (TRE) Workplan. Once the sources are identified, the Discharger shall take all reasonable steps to reduce toxicity to meet the requirements.

~~b.~~B. **Chronic Toxicity Testing**

1. Definition of Chronic Toxicity

   Chronic toxicity is a measure of adverse sub-lethal effects in plants, animals, or invertebrates in a long-term test. The effects measured may include lethality or decreases in fertilization, growth, and reproduction.

2. Chronic Toxicity Effluent Monitoring Program

   a. **Test Methods**. The Discharger shall conduct critical life stage chronic toxicity tests on 24-hour composite 100 % effluent samples and receiving water grab samples in accordance with USEPA's *Short Term Methods for Estimating the Chronic Toxicity of Effluents and Receiving Waters to Freshwater Organisms*, October 2002 (EPA-821-R-02-013) or USEPA's *Short Term Methods for Estimating the Chronic Toxicity of Effluents and Receiving Waters to Marine and Estuarine Organisms*, October 2002 (EPA-821-R-02-014), or current version. The Discharger shall conduct static renewal tests in accordance with the 2002 freshwater chronic methods manual for water flea and fathead minnow. For Selenastrum, use a static non-renewal test protocol.

   b. **Frequency**

      1. **Screening and Monitoring**. - The Discharger shall conduct the first chronic toxicity test screening for three consecutive months beginning from the date of initial discharge. The Discharger shall conduct short-term tests with the cladoceran, water flea (*Ceriodaphnia dubia* - survival and reproduction test), the fathead minnow (*Pimephales promelas* - larval survival and growth test), and the green alga (*Selenastrum capricornutum* - growth test) as an initial screening process for a minimum of three, but not to exceed five, suites of tests to account for potential variability of the effluent/receiving water. After this screening period, monitoring shall be conducted using the most sensitive species.

      2. **Re-screening** is required every 24 months. The Discharger shall re-screen with the three species listed above and continue to monitor with

the most sensitive species. If the first suite of re-screening tests demonstrates that the same species is the most sensitive then the re-screening does not need to include more than one suite of tests. If a different species is the most sensitive or if there is uncertainty as to whether the same species is the most sensitive based on the test results, the Discharger shall proceed with suites of screening tests for a minimum of three, but not to exceed five, suites.

3. Regular toxicity tests - After the screening period, monitoring shall be conducted monthly using the most sensitive species.

c. **Toxicity Units.** The chronic toxicity of the effluent shall be expressed and reported in Chronic Toxic Units, TUc, where,

$$TUc = \frac{100}{NOEC}$$

The No Observable Effect Concentration (NOEC) is expressed as the maximum percent effluent concentration that causes no observable effect on test organisms, as determined by the results of a critical life stage toxicity test.

3. Accelerated Monitoring

If the chronic toxicity of the effluent or the receiving water downstream the discharge exceeds the monthly trigger median of 1.0 TU_c, the Discharger shall conduct six additional tests of the water source that exceeded the 1.0 TU_c trigger (effluent or downstream receiving water), approximately every two weeks, over a 12-week period. The Discharger shall ensure that they receive results of a failing chronic toxicity test within 24 hours of the completion of the test and the additional tests shall begin within ~~5 business days~~48 hours of the receipt of the result. However, if the chronic toxicity of the receiving water upstream of the discharge is greater than the downstream and the TUc of the effluent chronic toxicity test is less than or equal to a monthly median of 1 TU_c trigger, then accelerated monitoring need not be implemented for the receiving water.

a. If any three out of the initial test and the six additional tests results exceed 1.0 TU_c the Discharger shall immediately implement the Initial Investigation TRE workplan. Otherwise, the Discharger may return to normal sampling.

b. If implementation of the initial investigation TRE workplan indicates the source of toxicity (e.g., a temporary plant upset, etc.), then the Discharger shall return to the normal sampling frequency required in Table 3 and Table 4 of this MRP.

c. If all of the six additional tests required above do not exceed 1 TUc, then the Discharger may return to the normal sampling frequency.

d. If a TRE/TIE is initiated prior to completion of the accelerated testing schedule required, then the accelerated testing schedule may be terminated, or used as necessary in performing the TRE/TIE, as determined by the Executive Officer.

~~c.~~C. Quality Assurance

1. Concurrent testing with a reference toxicant shall be conducted. Reference toxicant tests shall be conducted using the same test conditions as the effluent toxicity tests (e.g., same test duration, etc).

2. If either the reference toxicant test or effluent test does not meet all test acceptability criteria (TAC) as specified in the test methods manual (EPA-821-R-02-012 and/or EPA-821-R-02-013), then the Discharger must re-sample and re-test within 14 days.

3. Control and dilution water should be receiving water or laboratory water, as appropriate, as described in the manual. If the dilution water used is different from the culture water, a second control using culture water shall be used.

~~d.~~D. Preparation of an Initial Investigation TRE Workplan

The Discharger shall prepare and submit a copy of the Discharger's initial investigation Toxicity Reduction Evaluation (TRE) workplan to the Executive Officer of the Regional Water Board for approval within ~~90~~30 days of the ~~effective~~ date of adoption of this permit. If the Executive Officer does not disapprove the workplan within 60 days, the workplan shall become effective. The Discharger shall use USEPA manual EPA/833B-99/002 (municipal) as guidance, or most current version. At a minimum, the TRE Workplan must contain the provisions in Attachment G. This workplan shall describe the steps the Discharger intends to follow if toxicity is detected, and should include, at a minimum:

1. A description of the investigation and evaluation techniques that will be used to identify potential causes and sources of toxicity, effluent variability, and treatment system efficiency.

2. A description of the facility's methods of maximizing in-house treatment efficiency and good housekeeping practices, and a list of all chemicals used in the operation of the facility; and,

3. If a toxicity identification evaluation (TIE) is necessary, an indication of the person who would conduct the TIEs (i.e., an in-house expert or an outside contractor). See MRP Section V.E.3. for guidance manuals.

~~e.~~E. Steps in Toxicity Reduction Evaluation (TRE) and Toxicity Identification Evaluation (TIE)

1. If results of the implementation of the facility's initial investigation TRE workplan indicate the need to continue the TRE/TIE, the Discharger shall expeditiously develop a more detailed TRE workplan for submittal to the Executive Officer within 15 days of completion of the initial investigation TRE. The detailed workplan shall include, but not be limited to:

   a. Further actions to investigate and identify the cause of toxicity;

   b. Actions the Discharger will take to mitigate the impact of the discharge and prevent the recurrence of toxicity; and

   c. A schedule for these actions.

2. The following section summarizes the stepwise approach used in conducting the TRE:

   a. Step 1 includes basic data collection.

   b. Step 2 evaluates optimization of the treatment system operation, facility housekeeping, and selection and use of in-plant process chemicals.

   c. If Steps 1 and 2 are unsuccessful, Step 3 implements a Toxicity Identification Evaluation (TIE) and employment of all reasonable efforts using currently available TIE methodologies. The objective of the TIE shall be to identify the substance or combination of substances causing the observed toxicity.

   d. Assuming successful identification or characterization of the toxicant(s), Step 4 evaluates final effluent treatment options.

   e. Step 5 evaluates in-plant treatment options.

   f. Step 6 consists of confirmation once a toxicity control method has been implemented.
      Many recommended TRE elements parallel source control, pollution prevention, and storm water control program best management practices (BMPs). To prevent duplication of efforts, evidence of compliance with those requirements may be sufficient to comply with TRE requirements. By requiring the first steps of a TRE to be accelerated testing and review of the facility's TRE workplan, a TRE may be ended in its early stages. All reasonable steps shall be taken to reduce toxicity to the required level. The TRE may be ended at any stage if monitoring indicates there are no longer toxicity violations.

3. The Discharger shall initiate a TIE as part of the TRE process to identify the cause(s) of toxicity. The Discharger shall use the USEPA acute manual, chronic manual, EPA/600/R-96-054 (Phase I), EPA/600/R-92/080 (Phase II), and EPA-600/R-92/081 (Phase III), as guidance.

4. If a TRE/TIE is initiated prior to completion of the accelerated testing required in Section V.B.3. of this program, then the accelerated testing schedule may be terminated, or used as necessary in performing the TRE/TIE, as determined by the Executive Officer .

5. Toxicity tests conducted as part of a TRE/TIE may also be used for compliance, if appropriate.

6. The Regional Water Board recognizes that toxicity may be episodic and identification of causes of and reduction of sources of toxicity may not be successful in all cases. Consideration of enforcement action by the Board will be based, in part, on the Discharger's actions and efforts to identify and control or reduce sources of consistent toxicity.

   a. If all the results of the six additional tests are in compliance with the chronic toxicity limitation, the Discharger may resume regular monthly testing.

   b. If the results of any of the six accelerated tests exceeds the limitation, the Discharger shall continue to monitor weekly until six consecutive weekly tests are in compliance. At that time, the Discharger may resume regular monthly testing.

   c. If the results of ~~two~~three of the six tests exceed the $1TU_C$ trigger, the Discharger shall initiate a TRE.

   d. If implementation of the initial investigation TRE workplan (see item B.3.b., above) indicates the source of toxicity (e.g., a temporary plant upset, etc.), then the Discharger shall return to the regular testing frequency.

~~i.~~F. **Ammonia Removal**

1. Except with prior approval from the Executive Officer of the Regional Water Board, ammonia shall not be removed from bioassay samples. The Discharger must demonstrate the effluent toxicity is caused by ammonia because of increasing test pH when conducting the toxicity test. It is important to distinguish the potential toxic effects of ammonia from other pH sensitive chemicals, such as certain heavy metals, sulfide, and cyanide. The following may be steps to demonstrate that the toxicity is caused by ammonia and not other toxicants before the Executive Officer would allow for control of pH in the test.

   a. There is consistent toxicity in the effluent and the maximum pH in the toxicity test is in the range to cause toxicity due to increased pH.

   b. Chronic ammonia concentrations in the effluent are greater than 4 mg/L total ammonia.

c. Conduct graduated pH tests as specified in the toxicity identification evaluation methods. For example, mortality should be higher at pH 8 and lower at pH 6.

d. Treat the effluent with a zeolite column to remove ammonia. Mortality in the zeolite treated effluent should be lower than the non-zeolite treated effluent. Then add ammonia back to the zeolite-treated samples to confirm toxicity due to ammonia.

2. When it has been demonstrated that toxicity is due to ammonia because of increasing test pH, pH may be controlled using appropriate procedures which do not significantly alter the nature of the effluent, after submitting a written request to the Regional Water Board, and receiving written permission expressing approval from the Executive Officer of the Regional Water Board.

~~k.~~G. **Reporting**

The Discharger shall submit a full report of the toxicity test results, including any accelerated testing conducted during the month, as required by this permit. Test results shall be reported in Acute Toxicity Units (TUa) or Chronic Toxicity Units (TUc), as required, with the self-monitoring report (SMR) for the month in which the test is conducted. If an initial investigation indicates the source of toxicity and accelerated testing is unnecessary, pursuant to Section V.A.2.d. and V.B.3., then those results also shall be submitted with the SMR for the period in which the Investigation occurred.

1. The full report shall be received by the Regional Water Board by the 15th day of the third month following sampling.

2. The full report shall consist of (1) the results; (2) the dates of sample collection and initiation of each toxicity test; (3) the toxicity limit; and, (4) printout of the toxicity program (ToxCalc or CETIS).

3. Test results for toxicity tests also shall be reported according to the appropriate manual chapter on Report Preparation and shall be attached to the SMR. Routine reporting shall include, at a minimum, as applicable, for each test, as appropriate:

   a. sample date(s)

   b. test initiation date

   c. test species

   d. end point value(s) for each dilution (e.g. number of young, growth rate, percent survival)

   e. NOEC values in percent effluent

f. TUc value(s), where $TU_c = \frac{100}{NOEC}$

g. Mean percent mortality (+standard deviation) after 96 hours in 100% effluent (if applicable)

h. NOEC and LOEC (Lowest Observable Effect Concentration) values for reference toxicant test(s)

i. Available water quality measurements for each test (e.g., pH, D.O., temperature, conductivity, hardness, salinity, ammonia).

4. The Discharger shall provide a compliance summary that includes a summary table of toxicity data from at least eleven of the most recent samples.

5. The Discharger shall notify this Regional Water Board immediately of any toxicity exceedance and in writing 14 days after the receipt of the results of an effluent limit. The notification will describe actions the Discharger has taken or will take to investigate and correct the cause(s) of toxicity. It may also include a status report on any actions required by the permit, with a schedule for actions not yet completed. If no actions have been taken, the reasons shall be given.

VI. RECLAMATION MONITORING REQUIREMENTS

The Discharger currently recycles approximately 0.6% (18.25 million gallons per year) of the total treated effluent and plans to continue doing so. Recycled water is used for landscape irrigation at the Simi Valley WQCP and for dust control at a landfill. The production, distribution, and reuse of recycled water are presently regulated under Water Reclamation Requirements (WRR) Order No. 87-46, adopted by this Board on May 5, 1987.

VII. RECEIVING WATER MONITORING REQUIREMENTS – SURFACE WATER

A. Monitoring Location RSW-001 and RSW-002

1. The Discharger shall monitor Arroyo Simi at RSW-001 and RSW-002 as follows:

Table 4. Receiving Water Monitoring Requirements

Parameter	Units	Sample Type	Minimum Sampling Frequency	Required Analytical Test Method
Total flow	cfs	calculation	monthly	--
Turbidity	NTU	grab	monthly	[18]

[18] Pollutants shall be analyzed using the analytical methods described in 40 C.F.R. 136; where no methods are specified for a given pollutant, by methods approved by this Regional Water Board or State Water Resources Control Board. For any pollutant whose effluent limitation is lower than all the minimum levels (MLs) specified in Attachment 4 of the SIP, the analytical method with the lowest ML must be selected.

Parameter	Units	Sample Type	Minimum Sampling Frequency	Required Analytical Test Method
Total residual chlorine	mg/L	grab	monthly	[18]
Total coliform	MPN/100ml or CFU/100ml	grab	monthly	[18]
Fecal coliform	MPN/100ml or CFU/100ml	grab	monthly[19]	[18]
E. coli	MPN/100ml or CFU/100ml	grab	monthly[19]	[18]
Temperature	°F	grab	monthly	[18]
pH	pH units	grab	monthly	[18]
Settleable solids	mL/L	grab	monthly	[18]
Suspended solids	mg/L	grab	monthly	[18]
BOD_5 20°C	mg/L	grab	monthly	[18]
Oil and grease	mg/L	grab	quarterly	[18]
Dissolved oxygen	mg/L	grab	monthly	[18]
Conductivity	µmho/cm	grab	monthly	[18]
Total Dissolved Solids	mg/L	grab	monthly	[18]
Sulfate	mg/L	grab	monthly	[18]
Chloride	mg/L	grab	monthly	[18]
Boron	mg/L	grab	monthly	[18]
Total kjeldahl nitrogen (TKN)	mg/L	grab	monthly	[18]
Total nitrogen	mg/L	grab	monthly	[18]
Total phosphorus	mg/L	grab	monthly	[18]
Orthophosphate-P	mg/L	grab	monthly	[18]
Algal biomass[20]	mg/cm^2	grab	annually	[18]
Surfactants (MBAS)	mg/L	grab	monthly	[18]
Surfactants (CTAS)	mg/L	grab	quarterly	[18]
Total hardness ($CaCO_3$)	mg/L	grab	monthly	[18]
Chronic toxicity	TUc	grab	quarterly	[18]
Acute toxicity	% Survival	grab	semiannually	[18]
Copper	µg/L	grab	monthly	[18]
Mercury	µg/L	grab	monthly	[18]
Nickel	µg/L	grab	monthly	[18]
Selenium	µg/L	grab	monthly	[18]
Cyanide	µg/L	grab	monthly	[18]
Bromoform	µg/L	grab	monthly	[18]
Dibromochloromethane	µg/L	grab	monthly	[18]
Chloroform	µg/L	grab	monthly	[18]
Bromodichloromethane	µg/L	grab	monthly	[18]

[19] Fecal coliform shall be conducted only if total coliform test result is positive. E. coli testing shall be conducted only if fecal coliform testing is positive. If fecal coliform analysis results in no detection, a result of less than (<) the reporting limit for fecal coliform will reported for E. coli.

[20] Algal biomass or Chlorophyll A samples shall be collected by obtaining scrapings from the substrate. This will be a measure of benthic algae, rather than algae in the water column. Percent cover shall also be reported. Algal biomass monitoring shall be conducted concurrently with bioassessment monitoring.

Parameter	Units	Sample Type	Minimum Sampling Frequency	Required Analytical Test Method
Chlorpyrifos	µg/L	grab	quarterly	[18]
Diazinon	µg/L	grab	quarterly	[18]
Chlordane	µg/L	grab	quarterly	[18]
4,4'-DDD	µg/L	grab	quarterly	[18]
4,4'-DDE	µg/L	grab	quarterly	[18]
4,4'-DDT	µg/L	grab	quarterly	[18]
Dieldrin	µg/L	grab	quarterly	[18]
PCBs[21]	µg/L	grab	quarterly	[18]
Toxaphene	µg/L	grab	quarterly	[18]
Antimony	µg/L	grab	semiannually	[18]
Arsenic	µg/L	grab	semiannually	[18]
Beryllium	µg/L	grab	semiannually	[18]
Cadmium	µg/L	grab	semiannually	[18]
Chromium III	µg/L	calculation	semiannually	[18]
Chromium VI	µg/L	grab	semiannually	[18]
Lead	µg/L	grab	semiannually	[18]
Silver	µg/L	grab	semiannually	[18]
Thallium	µg/L	grab	semiannually	[18]
Zinc	µg/L	grab	semiannually	[18]
Methyl tert-butyl-ether (MTBE)	µg/L	grab	semiannually	[18]
Perchlorate	µg/L	grab	semiannually	[18]
1,4-Dioxane	µg/L	grab	semiannually	[18]
1,2,3-Trichloropropane	µg/L	grab	semiannually	[18]
2,3,7,8-TCDD[22]	µg/L	grab	semiannually	[18]
Iron	µg/L	grab	semiannually	[18]
Fluoride	mg/L	grab	semiannually	[18]
Barium	µg/L	grab	semiannually	[18]
Methoxychlor	µg/L	grab	semiannually	[18]
2,4-D	µg/L	grab	semiannually	[18]
2,4,5-TP (Silvex)	µg/L	grab	semiannually	[18]
Remaining USEPA priority pollutants[23] excluding asbestos	µg/L	grab	semiannually	[18]

[21] PCBs is the sum of Aroclor 1016, Aroclor 1221, Aroclor 1232, Aroclor 1242, Aroclor 1248, Aroclor 1254, and Aroclor 1260.

[22] In accordance with the SIP, the Discharger shall conduct effluent monitoring for the seventeen 2,3,7,8-tetrachlorodibenzo-p-dioxin (2,3,7,8-TCDD or dioxin) congeners in the effluent and in the receiving water Station RSW-002, located downstream of discharge point 001. The Discharger shall use the appropriate Toxicity Equivalence Factor (TEF) to determine Toxic Equivalence (TEQ). Where TEQ equals the product between each of the 17 individual congeners' (i) concentration analytical result (C_i) and their corresponding Toxicity Equivalence Factor (TEF_i)., (i.e., $TEQ_i = C_i \times TEF_i$). Compliance with the Dioxin limitation shall be determined by the summation of the seventeen individual TEQs, or the following equation:

$$\text{Dioxin concentration in effluent} = \sum_{1}^{17}(TEQ_i) = \sum_{1}^{17}(C_i)(TEF_i)$$

2. Receiving water samples shall not be taken during or within 48-hours following the flow of rainwater runoff into the Arroyo Simi. Sampling may be rescheduled at receiving water stations if weather and/or flow conditions would endanger personnel collecting receiving water samples. The monthly monitoring report shall note such occasions.

VIII. OTHER MONITORING REQUIREMENTS

~~a.~~A. Watershed Monitoring

The goals of the Watershed-wide Monitoring Program for the Calleguas Creek Watershed are to:

~~i.~~• Determine compliance with receiving water limits;
~~I.~~• Monitor trends in surface water quality;
~~II.~~• Ensure protection of beneficial uses;
~~III.~~• Provide data for modeling contaminants of concern;
~~Iç.~~• Characterize water quality including seasonal variation of surface waters within the watershed;
~~ç.~~• Assess the health of the biological community; and
~~çI.~~• Determine mixing dynamics of effluent and receiving waters in the estuary.

1. The Discharger shall participate in the implementation of the Watershed-wide Monitoring Program. The City's responsibilities under the Watershed-wide Monitoring Program are described in the Receiving Water Monitoring Requirements section. To achieve the goals of the Watershed-wide Monitoring Program, revisions to the Receiving Water Monitoring Requirements will be made under the direction of USEPA and the Regional Board. The City has participated with stakeholders in the Calleguas Creek Watershed, to develop the watershed-wide monitoring program. The Discharger shall implement the watershed-wide monitoring program and shall submit quarterly progress reports detailing ongoing efforts towards the implementation of the Watershed-wide Monitoring Program. The first report should be received in the Regional Board office by ~~October~~January 15, 200~~8~~9.

2. In coordination with interested stakeholders in the Calleguas Creek Watershed, the Discharger shall conduct instream bioassessment monitoring once a year, during the spring/summer period (unless an alternate sampling period is approved by the Executive Officer). Over time, bioassessment monitoring will provide a measure of the physical condition of the waterbody and the integrity of its biological communities.

[23] Priority pollutants are those constituents referred to in 40 C.F.R. 401.15; a list of these pollutants is provided as Appendix A to 40 C.F.R. 423.

A. The bioassessment program shall include an analysis of the community structure of the instream macroinvertebrate assemblages and physical habitat assessment at monitoring stations RSW-001 and RSW-002.

This program shall be implemented by appropriately trained staff. Alternatively, a professional subcontractor qualified to conduct bioassessments may be selected to perform the bioassessment work for the Discharger. Analyses of the results of the bioassessment monitoring program, along with photographs of the monitoring site locations taken during sample collection, shall be submitted in the corresponding annual report. If another stakeholder, or interested party in the watershed subcontracts a qualified professional to conduct bioassessment monitoring during the same season and at the same location as specified in the MRP, then the Discharger may, in lieu of duplicative sampling, submit the data, a report interpreting the data, photographs of the site, and related QA/QC documentation in the corresponding annual report.

~~1.~~B. The Discharger must provide a copy of their Standard Operation Procedures (SOPs) for the Bioassessment Monitoring Program to the Regional Board upon request. The document must contain step-by-step field, laboratory and data entry procedures, as well as, related QA/QC procedures. The SOP must also include specific information about each bioassessment program including: assessment program description, its organization and the responsibilities of all its personnel; assessment project description and objectives; qualifications of all personnel; and the type of training each member has received.

~~2.~~C. Field sampling must conform to the SOP established for the California Stream Bioassessment Procedure (CSBP) or more recently established sampling protocols, such as used by the Surface Water Ambient Monitoring Program (SWAMP). Field crews shall be trained on aspects of the protocol and appropriate safety issues. All field data and sample Chain of Custody (COC) forms must be examined for completion and gross errors. Field inspections shall be planned with random visits and shall be performed by the Discharger or an independent auditor. These visits shall report on all aspects of the field procedure with corrective action occurring immediately.

~~3.~~D. A taxonomic identification laboratory shall process the biological samples that usually consist of subsampling organisms, enumerating and identifying taxonomic groups and entering the information into an electronic format. The Regional Board may require QA/QC documents from the taxonomic laboratories and examine their records regularly. Intra-laboratory QA/QC for subsampling, taxonomic validation and corrective actions shall be conducted and documented. Biological laboratories shall also maintain reference collections, vouchered specimens (the Discharger may request the return of their sample voucher collections) and remnant collections. The laboratory should participate in an (external) laboratory taxonomic validation program at a recommended level of 10% or 20%. External QA/QC may be arranged

through the California Department of Fish and Game's Aquatic Bioassessment Laboratory located in Rancho Cordova, California.

3. The Executive Officer of the Regional Water Board may modify Monitoring and Reporting Program to accommodate the watershed-wide monitoring.

~~b.~~B. Tertiary Filter Treatment Bypasses

1. During any day that filters are bypassed, Simi Valley WQCP shall monitor the effluent for BOD, suspended solids, settleable solids, and oil and grease, on daily basis, until it is demonstrated that the filter "bypass" has not caused an adverse impact on the receiving water.

2. Simi Valley WQCP shall maintain chronological log of tertiary filter treatment process bypasses, to include the following:

   a. Date and time of bypass start and end;
   b. Total duration time; and,
   c. Estimated total volume bypassed

3. Simi Valley WQCP shall notify Regional Board staff by telephone within 24 hours of the filter bypass event.

4. Simi Valley WQCP shall submit a written report to the Regional Board, according to the corresponding monthly self monitoring report schedule. The report shall include, at a minimum, the information from the chronological log. Results from the daily effluent monitoring, required by B.1. above, shall be submitted to the Regional Board as the results become available.

IX. REPORTING REQUIREMENTS

A. General Monitoring and Reporting Requirements

1. The Discharger shall comply with all Standard Provisions (Attachment D) related to monitoring, reporting, and recordkeeping.

2. If there is no discharge during any reporting period, the report shall so state.

3. Each monitoring report shall contain a separate section titled "Summary of Non-Compliance" which discusses the compliance record and the corrective actions taken or planned that may be needed to bring the discharge into full compliance with waste discharge requirements. This section shall clearly list all non-compliance with discharge requirements, as well as all excursions of effluent limitations.

4. The Discharger shall inform the Regional Board well in advance of any proposed construction activity that could potentially affect compliance with applicable requirements.

B. Self Monitoring Reports (SMRs)

1. At any time during the term of this permit, the State or Regional Water Board may notify the Discharger to electronically submit Self-Monitoring Reports (SMRs) using the State Water Board's California Integrated Water Quality System (CIWQS) Program Web site (http://www.waterboards.ca.gov/ciwqs/index.html). Until such notification is given, the Discharger shall submit hard copy SMRs. The CIWQS Web site will provide additional directions for SMR submittal in the event there will be service interruption for electronic submittal.

2. The Discharger shall report in the SMR the results for all monitoring specified in this MRP under sections III through IX. The Discharger shall submit monthly, quarterly, semiannual, annual SMRs including the results of all required monitoring using USEPA-approved test methods or other test methods specified in this Order. If the Discharger monitors any pollutant more frequently than required by this Order, the results of this monitoring shall be included in the calculations and reporting of the data submitted in the SMR.

3. Monitoring periods and reporting for all required monitoring shall be completed according to the following schedule:

Table 5. Monitoring Periods and Reporting Schedule

Sampling Frequency	Monitoring Period Begins On…	Monitoring Period	SMR Due Date
Continuous	Permit effective date	All	Submit with monthly SMR
Daily	Permit effective date	(Midnight through 11:59 PM) or any 24-hour period that reasonably represents a calendar day for purposes of sampling.	Submit with monthly SMR
Weekly	Sunday following permit effective date or on permit effective date if on a Sunday	Sunday through Saturday	Submit with monthly SMR
Monthly	First day of calendar month following permit effective date or on permit effective date if that date is first day of the month	1st day of calendar month through last day of calendar month	By the 15th day of the third month after the month of sampling
Quarterly	Closest of January 1, April 1, July 1, or October 1 following (or on) permit effective date	January 1 through March 31 April 1 through June 30 July 1 through September 30 October 1 through December 31	June 15 September 15 December 15 March 15
Semiannually	Closest of January 1 or July 1 following (or on) permit effective date	January 1 through June 30 July 1 through December 31	September 15 March 15
Annually	January 1 following (or on) permit effective date	January 1 through December 31	April 15
Biennially	August 1, 2009	August 1, every other year	November 15

4. Reporting Protocols. The Discharger shall report with each sample result the applicable Reporting Level (RL) and the current Method Detection Limit (MDL), as determined by the procedure in Part 136.

   The Discharger shall report the results of analytical determinations for the presence of chemical constituents in a sample using the following reporting protocols:

   a. Sample results greater than or equal to the RL shall be reported as measured by the laboratory (i.e., the measured chemical concentration in the sample).

   b. Sample results less than the RL, but greater than or equal to the laboratory's MDL, shall be reported as "Detected, but Not Quantified," or DNQ. The estimated chemical concentration of the sample shall also be reported.

      For the purposes of data collection, the laboratory shall write the estimated chemical concentration next to DNQ as well as the words "Estimated Concentration" (may be shortened to "Est. Conc."). The laboratory may, if such information is available, include numerical estimates of the data quality for the reported result. Numerical estimates of data quality may be percent accuracy (± a percentage of the reported value), numerical ranges (low to high), or any other means considered appropriate by the laboratory.

   c. Sample results less than the laboratory's MDL shall be reported as "Not Detected," or ND.

   d. Dischargers are to instruct laboratories to establish calibration standards so that the ML value (or its equivalent if there is differential treatment of samples relative to calibration standards) is the lowest calibration standard. At no time is the Discharger to use analytical data derived from *extrapolation* beyond the lowest point of the calibration curve.

5. The Discharger shall submit SMRs in accordance with the following requirements:

   a. The Discharger shall arrange all reported data in a tabular format. The data shall be summarized to clearly illustrate whether the facility is operating in compliance with interim and/or final effluent limitations. The Discharger is not required to duplicate the submittal of data that is entered in a tabular format within CIWQS. When electronic submittal of data is required and CIWQS does not provide for entry into a tabular format within the system, the Discharger shall electronically submit the data in a tabular format as an attachment.

   b. The Discharger shall attach a cover letter to the SMR. The information contained in the cover letter shall clearly identify violations of the WDRs; discuss corrective actions taken or planned; and the proposed time schedule for corrective actions. Identified violations must include a description of the requirement that was violated and a description of the violation.

   c. SMRs must be submitted to the Regional Water Board, signed and certified as required by the Standard Provisions (Attachment D), to the address listed below:

(Reference the reports to Compliance File No. 3021 to facilitate routing to the appropriate staff and file.)

California Regional Water Quality Control Board
320 West 4th Street, Suite 200
Los Angeles, CA 90013
Attention: Information Technology Unit

C. Discharge Monitoring Reports (DMRs)

1. As described in Section X.B.1 above, at any time during the term of this permit, the State or Regional Water Board may notify the Discharger to electronically submit SMRs that will satisfy federal requirements for submittal of Discharge Monitoring Reports (DMRs). Until such notification is given, the Discharger shall submit DMRs in accordance with the requirements described below.

2. DMRs must be signed and certified as required by the standard provisions (Attachment D). The Discharger shall submit the original DMR and one copy of the DMR to the address listed below:

STANDARD MAIL	FEDEX/UPS/ OTHER PRIVATE CARRIERS
State Water Resources Control Board Division of Water Quality c/o DMR Processing Center PO Box 100 Sacramento, CA 95812-1000	State Water Resources Control Board Division of Water Quality c/o DMR Processing Center 1001 I Street, 15th Floor Sacramento, CA 95814

3. All discharge monitoring results must be reported on the official USEPA pre-printed DMR forms (EPA Form 3320-1). Forms that are self-generated will not be accepted unless they follow the exact same format of USEPA Form 3320-1.

D. Other Reports

1. Annual Summary Report

By April 15 of each year, the Discharger shall submit an annual report containing a discussion of the previous year's influent/effluent analytical results and receiving water bacterial monitoring data. The annual report shall contain graphical and tabular summaries of the monitoring analytical data. The annual report shall also contain an overview of any plans for upgrades to the treatment plant's collection system, the treatment processes, or the outfall system. The Discharger shall submit

a hard copy annual report to the Regional Water Board in accordance with the requirements described in subsection B.5 above.

Each annual monitoring report shall contain a separate section titled "Reasonable Potential Analysis" which discusses whether or not reasonable potential was triggered for pollutants which do not have a final effluent limitation in the NPDES permit. This section shall contain the following statement: "The analytical results for this sampling period did/ did not trigger reasonable potential." If reasonable potential was triggered, then the following information should also be provided:

a. A list of the pollutant(s) that triggered reasonable potential;
b. The Basin Plan or CTR criteria that was exceeded for each given pollutant;
c. The concentration of the pollutant(s);
d. The test method used to analyze the sample; and,
e. The date and time of sample collection.

2. The Discharger shall submit to the Regional Water Board, together with the first monitoring report required by this permit, a list of all chemicals and proprietary additives which could affect this waste discharge, including quantities of each. Any subsequent changes in types and/or quantities shall be reported promptly.

3. The Regional Board requires the Discharger to file with the Regional Board, within 90 days after the effective date of this Order, a technical report on his preventive (failsafe) and contingency (cleanup) plans for controlling accidental discharges, and for minimizing the effect of such events. The technical report should:

   a. Identify the possible sources of accidental loss, untreated waste bypass, and contaminated drainage. Loading and storage areas, power outage, waste treatment unit outage, and failure of process equipment, tanks, and pipes should be considered.

   b. Evaluate the effectiveness of present facilities and procedures and state when they become operational.

   c. Describe facilities and procedures needed for effective preventive and contingency plans.

   d. Predict the effectiveness of the proposed facilities and procedures and provide an implementation schedule contingent interim and final dates when they will be constructed, implemented, or operational.

ATTACHMENT F – FACT SHEET

Table of Contents

Attachment F – Fact Sheet F-3
I. Permit Information F-3
II. Facility Description F-4
A. Description of Wastewater and Biosolids Treatment or Controls F-4
B. Discharge Points and Receiving Waters F-5
C. Summary of Existing Requirements and Self-Monitoring Report (SMR) Data F-6
D. Compliance Summary F-11
E. Planned Changes F-11
III. Applicable Plans, Policies, and Regulations F-11
A. Legal Authorities F-11
B. California Environmental Quality Act (CEQA) F-12
C. State and Federal Regulations, Policies, and Plans F-12
D. Impaired Water Bodies on CWA 303(d) List F-17
E. Other Plans, Polices and Regulations F-18
IV. Rationale For Effluent Limitations and Discharge Specifications F-21
A. Discharge Prohibitions F-22
B. Technology-Based Effluent Limitations F-22
1. Scope and Authority F-22
2. Applicable Technology-Based Effluent Limitations F-23
C. Water Quality-Based Effluent Limitations (WQBELs) F-24
1. Scope and Authority F-24
2. Applicable Beneficial Uses and Water Quality Criteria and Objectives F-24
3. Determining the Need for WQBELs F-34
4. WQBEL Calculations F-40
5. Whole Effluent Toxicity (WET) F-47
D. Final Effluent Limitations F-48
E. Interim Effluent Limitations F-56
F. Reclamation Specifications F-58
V. Rationale for Receiving Water Limitations F-58
A. Surface Water F-58
B. Groundwater F-58
VI. Rationale for Monitoring and Reporting Requirements F-58
A. Influent Monitoring F-59
B. Effluent Monitoring F-59
C. Whole Effluent Toxicity Testing Requirements F-61
D. Receiving Water Monitoring F-61
1. Surface Water F-62
2. Groundwater F-62
E. Other Monitoring Requirements F-62
1. Watershed Monitoring and Bioassessment Monitoring F-62
VII. Rationale for Provisions F-62
A. Standard Provisions F-62

B. Special Provisions F-63
1. Reopener Provisions F-63
2. Special Studies and Additional Monitoring Requirements F-63
3. Best Management Practices and Pollution Prevention F-63
4. Construction, Operation, and Maintenance Specifications F-64
5. Special Provisions for Municipal Facilities (POTWs Only) F-64
6. Compliance Schedules F-65
VIII. Public Participation F-65
A. Notification of Interested Parties F-65
B. Written Comments F-65
C. Public Hearing F-66
D. Nature of Hearing F-66
E. Parties to the Hearing F-67
F. Public Comments and Submittal of Evidence F-67
G. Hearing Procedure F-67
H. Waste Discharge Requirements Petitions F-68
I. Information and Copying F-68
J. Register of Interested Persons F-68
K. Additional Information F-68

List of Tables

Table 1. Facility Information F-3
Table 2. Historic Effluent Limitations and Monitoring Data F-6
Table 3a. Basin Plan Beneficial Uses – Receiving Waters F-12
Table 3b. Basin Plan Beneficial Uses – Ground Waters F-14
Table 4. Summary of Technology-based Effluent Limitations F-23
Table 5. Summary of Reasonable Potential Analysis F-36
Table 6. Summary of Water Quality-based Effluent Limitations F-45
Table 7. Summary of Final Effluent Limitations F-50
Table 8. Summary of Interim Effluent Limitations F-57
Table 9. Effluent Monitoring Program Comparison Table F-60

ATTACHMENT F – FACT SHEET

As described in section II of this Order, this Fact Sheet includes the legal requirements and technical rationale that serve as the basis for the requirements of this Order.

This Order has been prepared under a standardized format to accommodate a broad range of discharge requirements for Dischargers in California. Only those sections or subsections of this Order that are specifically identified as "not applicable" have been determined not to apply to this Discharger. Sections or subsections of this Order not specifically identified as "not applicable" are fully applicable to this Discharger.

I. PERMIT INFORMATION

The following table summarizes administrative information related to the facility.

Table 1. Facility Information

WDID	4A560110001
Discharger	City of Simi Valley
Name of Facility	Simi Valley Water Quality Control Plant
Facility Address	600 West Los Angeles Avenue
	Simi Valley, CA 93065
	Ventura County
FACILITY CONTACT, TITLE AND PHONE	James F. Langley, Deputy Director/Sanitations Services, (805) 583-6443
AUTHORIZED PERSON TO SIGN AND SUBMIT REPORTS	James F. Langley, Deputy Director/Sanitations Services, (805) 583-6443
MAILING ADDRESS	2929 Tapo Canyon Road, Simi Valley, CA 93063
Billing Address	Same a Mailing Address
Type of Facility	POTW
Major or Minor Facility	Major
Threat to Water Quality	1
Complexity	A
Pretreatment Program	Y
Reclamation Requirements	Producer/User
Facility Permitted Flow	12.5 million gallons per day
Facility Design Flow	12.5 million gallons per day
Watershed	Calleguas Creek
Receiving Water	Arroyo Simi
Receiving Water Type	Inland surface water

A. The City of Simi Valley (hereinafter Discharger) is the owner and operator of the Simi Valley Water Quality Control Plant (hereinafter Facility), a Publicly-Owned Treatment Works.

For the purposes of this Order, references to the "discharger" or "permittee" in applicable federal and state laws, regulations, plans, or policy are held to be equivalent to references to the Discharger herein.

B. The Facility discharges wastewater to Arroyo Simi, a water of the United States, and is currently regulated by Order No. R4-2003-0081 which was adopted on June 5, 2003, and expired on June 5, 2008. The terms and conditions of the current Order have been automatically continued and remain in effect until new Waste Discharge Requirements and NPDES permit are adopted pursuant to this Order.

C. The Discharger filed a report of waste discharge and submitted an application for renewal of its Waste Discharge Requirements (WDRs) and National Pollutant Discharge Elimination System (NPDES) permit on December 6, 2007. A site visit was conducted on March 4, 2008, to observe operations and collect additional data to develop permit limitations and conditions.

II. FACILITY DESCRIPTION

The Discharger owns and operates the Simi Valley Water Quality Control Plant (Simi Valley WQCP), a tertiary wastewater treatment plant located at 600 West Los Angeles Avenue, Simi Valley, California. Attachment B shows the location of the plant. The Simi Valley WQCP currently receives wastewater from the City of Simi Valley and unincorporated sections of Ventura County. The wastewater is a mixture of domestic and industrial wastewater that is pre-treated pursuant to 40 C.F.R. Part 403. Simi Valley WQCP has a design capacity of 12.5 mgd and serves an estimated population of 124,500 people.

A. Description of Wastewater and Biosolids Treatment or Controls

1. Treatment at the Simi Valley WQCP consists of primary sedimentation, activated sludge biological treatment with nitrification and denitrification, secondary sedimentation, dual media filtration, chlorination, and dechlorination. Treated wastewater discharged to Arroyo Simi is dechlorinated but the effluent delivered for reuse is not dechlorinated.

2. Sodium hypochlorite is used as a disinfectant in the Simi Valley WQCP. The disinfecting agent is added to the treated effluent prior to the filters to destroy bacteria, pathogens and viruses, and to minimize algal growth in the filters. Additional disinfectant may be dosed prior to the serpentine chlorine contact chamber. Prior to discharge, sodium bisulfite is added to the treated effluent to remove residual chlorine.

3. Primary sludge is anaerobically digested. Sewage solids (sludge) separated from the wastewater are dewatered with a press and transported to Simi Valley Landfill, Simi Valley, California.

4. Simi Valley WQCP has constructed a biological nutrient removal system with nitrogen de-nitrification process (NDN) in order to achieve compliance with the

ammonia Basin Plan objectives. The system was completed and has been in operation since September 2004.

B. Discharge Points and Receiving Waters

The Simi Valley WQCP discharges tertiary-treated municipal and industrial wastewater to Arroyo Simi, a water of the United States, above the Estuary, within the Calleguas Creek Watershed. Treated effluents are discharged from the plant to surface waters at the following discharge points:

Discharge Point 001: Discharge to Arroyo Simi (approximate coordinates: Latitude 34° 16' 56", Longitude 118° 48' 44").

Discharge Point 002: Discharge to Arroyo Simi (approximate coordinates: Latitude 34° 16' 56", Longitude 118° 48' 46). This is an alternate downstream outfall that has never been used. It was provided as a back up discharge point in the event that discharge through Discharge Point 001 is restricted because of flooding in the Arroyo Simi. Discharge Point 002 is 225 feet downstream of Discharge Point 001.

During dry weather (May 1 – October 31), the primary sources of water flow in the receiving waters, downstream of the discharge point, is the Simi Valley WQCP effluent and other NPDES-permitted discharges, including urban runoff conveyed through the municipal separate storm sewer systems (MS4). Storm water and dry weather urban runoff from MS4 are regulated under an NPDES permit, Waste Discharge Requirements for Municipal Storm Water and Urban Runoff Discharges within the Ventura County Watershed Protection District (formerly known as Ventura County Flood Control District), County of Ventura, and the Cities of Ventura County (Ventura Municipal Permit), NPDES Permit No. CAS004002. During dry weather, surface water flow usually percolates to groundwater before the surface flow reaches Hitch Boulevard in the City of Moorpark, past the Moorpark Wastewater Treatment Plant. Some effluent may reach Seminary Road during parts of the year. The Moorpark WWTP is another POTW in Calleguas Creek Watershed, located downstream of the Simi Valley WQCP, that intermittently discharges to Arroyo Las Posas (tributary to Arroyo Simi).

The Ventura County Watershed Protection District (formerly known as Ventura County Flood Control District) channelized portions of Calleguas Creek to convey and control floodwater, and to prevent damage to homes located adjacent to the Creek. Calleguas Creek is a water of the United States that conveys floodwater and urban runoff, along with treated waste water. Arroyo Simi is unlined near the point of discharge. Groundwater recharge occurs incidentally in these unlined areas of Arroyo Simi, Arroyo Las Posas, and Calleguas Creek, where the underlying sediments are highly transmissive to water as well as pollutants.

Notwithstanding that segments located further downstream of the discharge are concrete-lined, the watershed supports a diversity of wildlife. Threatened and endangered species such as the peregrine falcon, least tern, light-footed clapper rail, and the brown pelican are found in Calleguas Creek and Mugu Lagoon.

C. Summary of Existing Requirements and Self-Monitoring Report (SMR) Data

Effluent limitations contained in the existing Order for discharges from Discharge Point 001 (Monitoring Location EFF-001) and representative monitoring data from the term of the previous Order are as follows:

Table 2. Historic Effluent Limitations and Monitoring Data

Parameter	Units	Effluent Limitation			Monitoring Data[1] (From 08/01/2003 To 12/31/2007)		
		Average Monthly	Average Weekly	Maximum Daily	Highest Average Monthly Discharge	Highest Average Weekly Discharge[2, 3]	Highest Daily Discharge
$BOD_5 20^oC$	mg/L	20	30	45	9.7	2.5	18.9
Suspended Solids	mg/L	15	40	45	3.1	2.8	10.6
Oil and Grease	mg/L	10	--	15	<5	--	<5
Settleable Solids	ml/L	0.1	--	0.3	<0.1	--	< 0.1
Residual Chlorine	mg/L	--	--	0.1	<0.1	--	<0.1
Total Dissolved Solids	mg/L	850	--	--	1055	--	897
MBAS	mg/L	0.5	--	--	<0.5	--	<0.5
Chloride	mg/L	190	--	--	159	--	256
Sulfate	mg/L	250	--	--	333	--	342
Boron	mg/L	1	--	--	0.8	--	0.9
Fluoride	mg/L	1.6	--	--	0.8	--	0.8
Nitrite-N (as N)	mg/L	1	--	--	0.32		0.32
Nitrate + Nitrite as N	mg/L	9	--	--	12		12
Total Ammonia	mg/L	2.35	--		<1		<1
Antimony	µg/L	6	--	--	0.59	--	0.59
Arsenic	µg/L	50	--	--	9	--	9
Beryllium	µg/L	--	--	--	ND	--	ND
Cadmium	µg/L	5	--	--	3.1	--	3.1
Chromium III	µg/L	--	--	--	--	--	--
Chromium VI	µg/L	50	--	--	ND<25	--	ND<25
Copper	µg/L	1000	--	--	13	--	13
Lead	µg/L	50	--	--	6	--	6
Mercury	µg/L	2	--	--	1.7	--	1.7
Nickel	µg/L	100	--	--	10	--	10
Selenium	µg/L	9.1	--	--	3.4	--	3.4
Silver	µg/L	50	--	--	10	--	10

[1] "E" means estimated concentration. These monitoring data are less than the reporting level, but greater than or equal to the respective laboratory's MDLs.
[2] The highest average weekly discharge concentration is reported for constituents that are monitored at weekly or more frequent intervals.
[3] Weekly averages are calculated as a calendar week average.

Parameter	Units	Effluent Limitation			Monitoring Data[1] (From 08/01/2003 To 12/31/2007)		
		Average Monthly	Average Weekly	Maximum Daily	Highest Average Monthly Discharge	Highest Average Weekly Discharge[2, 3]	Highest Daily Discharge
Thallium	µg/L	2	--	--	ND<2	--	ND<2
Zinc	µg/L	5000	--	--	120	--	120
Cyanide	µg/L	5.2	--	--	11	--	11
Asbestos	µg/L	--	--	--	--	--	--
2,3,7,8-TCDD (Dioxin)	µg/L	--	--	--	< 0.000006	--	< 0.000006
Acrolein	µg/L	--	--	--	ND< 10	--	ND< 10
Acrylonitrile	µg/L	--	--	--	ND< 20	--	ND< 20
Benzene	µg/L	--	--	--	ND< 0.5	--	<ND 0.5
Bromoform	µg/L	--	--	--	1.5	--	1.5
Carbon Tetrachloride	µg/L	--	--	--	ND< 0.5	--	ND< 0.5
Chlorobenzene	µg/L	--	--	--	ND	--	ND
Dibromochloromethane	µg/L	--	--	--	16	--	16
Chloroethane	µg/L	--	--	--	ND< 1	--	ND< 1
2-chloroethyl vinyl ether	µg/L	--	--	--	ND< 10	--	ND< 10
Chloroform	µg/L	--	--	--	46	--	46
Dichlorobromomethane	µg/L	--	--	--	35.1	--	35.1
1,1-dichloroethane	µg/L	--	--	--	ND< 1	--	ND< 1
1,2-dichloroethane	µg/L	--	--	--	ND< 0.5	--	ND< 0.5
1,1-dichloroethylene	µg/L	--	--	--	ND< 1	--	ND< 1
1,2-dichloropropane	µg/L	--	--	--	ND< 1	--	ND< 1
1,3-dichloropropylene	µg/L	--	--	--	ND< 1	--	ND< 1
Ethylbenzene	µg/L	--	--	--	ND< 1	--	ND< 1
Methyl bromide	µg/L	--	--	--	0.5	--	0.5
Methyl chloride	µg/L	--	--	--	ND< 1	--	ND< 1
Methylene chloride	µg/L	--	--	--	ND< 0.4	--	ND< 0.4
1,1,2,2-tetrachloroethane	µg/L	--	--	--	ND< 1	--	ND< 1
Tetrachloroethylene	µg/L	5	--	--	0.5	--	0.52
Toluene	µg/L	--	--	--	ND< 0.3	--	ND< 0.3
Trans 1,2-Dichloroethylene	µg/L	--	--	--	< 1	--	< 1
1,1,1-Trichloroethane	µg/L	--	--	--	< 1	--	< 1

Parameter	Units	Effluent Limitation			Monitoring Data[1] (From 08/01/2003 To 12/31/2007)		
		Average Monthly	Average Weekly	Maximum Daily	Highest Average Monthly Discharge	Highest Average Weekly Discharge[2, 3]	Highest Daily Discharge
1,1,2-Trichloroethane	µg/L	--	--	--	< 1	--	< 1
Trichloroethylene	µg/L	--	--	--	< 1	--	< 1
Vinyl Chloride	µg/L	--	--	--	< 0.5	--	< 0.5
2-chlorophenol	µg/L	--	--	--	< 5	--	< 5
2,4-dichlorophenol	µg/L	--	--	--	< 5	--	< 5
2,4-dimethylphenol	µg/L	--	--	--	< 2	--	< 2
4,6-dinitro-o-resol(aka 2-methyl-4,6-Dinitrophenol)	µg/L	--	--	--	< 5	--	< 5
2,4-dinitrophenol	µg/L	--	--	--	< 5	--	< 5
2-nitrophenol	µg/L	--	--	--	< 10	--	< 10
4-nitrophenol	µg/L	--	--	--	< 10	--	< 10
3-Methyl-4-Chlorophenol (aka 4-chloro-m-cresol)	µg/L	--	--	--	< 1	--	< 1
Pentachlorophenol	µg/L	--	--	--	< 3	--	< 5
Phenol	µg/L	--	--	--	< 1	--	< 1
2,4,6-trichlorophenol	µg/L	--	--	--	<0.65	--	< 0.65
Acenaphthene	µg/L	--	--	--	< 1	--	< 1
Acenaphthylene	µg/L	--	--	--	< 10	--	< 10
Anthracene	µg/L	--	--	--	< 10	--	< 10
Benzidine	µg/L	--	--	--	< 5	--	< 5
Benzo(a)Anthracene	µg/L	--	--	--	< 5	--	< 5
Benzo(a)Pyrene	µg/L	--	--	--	< 0.02	--	< 0.02
Benzo(b)Fluoranthene	µg/L	--	--	--	< 0.02	--	< 0.02
Benzo(ghi)Perylene	µg/L	--	--	--	< 5	--	< 5
Benzo(k)Fluoranthene	µg/L	--	--	--	< 0.02	--	< 0.02
Bis(2-Chloroethoxy) methane	µg/L	--	--	--	< 5	--	< 5
Bis(2-Chloroethyl)Ether	µg/L	--	--	--	< 1	--	< 1
Bis(2-Chloroisopropyl) Ether	µg/L	--	--	--	< 2	--	< 2
Bis(2-Ethylhexyl)Phthalate	µg/L	--	--	--	< 10	--	< 10

Parameter	Units	Effluent Limitation			Monitoring Data[1] (From 08/01/2003 To 12/31/2007)		
		Average Monthly	Average Weekly	Maximum Daily	Highest Average Monthly Discharge	Highest Average Weekly Discharge[2, 3]	Highest Daily Discharge
4-Bromophenyl Phenyl Ether	µg/L	--	--	--	< 5	--	< 5
Butylbenzyl Phthalate	µg/L	--	--	--	< 10	--	< 10
2-Chloronaphthalene	µg/L	--	--	--	< 10	--	< 10
4-Chlorophenyl Phenyl Ether	µg/L	--	--	--	< 5	--	< 5
Chrysene	µg/L	--	--	--	< 0.02	--	< 0.02
Dibenzo(a,h) Anthracene	µg/L	--	--	--	< 0.02	--	< 0.02
1,2-Dichlorobenzene	µg/L	--	--	--	< 2	--	< 2
1,3-Dichlorobenzene	µg/L	--	--	--	< 1	--	< 1
1,4-Dichlorobenzene	µg/L	5	--	--	< 0.5	--	< 0.5
3-3'-Dichlorobenzidine	µg/L	--	--	--	< 5	--	< 5
Diethyl Phthalate	µg/L	--	--	--	< 0.57	--	< 0.57
Dimethyl Phthalate	µg/L	--	--	--	< 2	--	< 2
Di-n-Butyl Phthalate	µg/L	--	--	--	< 10	--	< 10
2-4-Dinitrotoluene	µg/L	--	--	--	< 5	--	< 5
2-6-Dinitrotoluene	µg/L	--	--	--	< 5	--	< 5
Di-n-Octyl Phthalate	µg/L	--	--	--	< 10	--	< 10
1,2-Diphenylhydrazine	µg/L	--	--	--	< 1	--	< 1
Fluoranthene	µg/L	--	--	--	< 1	--	< 1
Fluorene	µg/L	--	--	--	< 10	--	< 10
Hexachlorobenzene	µg/L	--	--	--	< 1	--	< 1
Hexachlorobutadiene	µg/L	--	--	--	< 1	--	< 1
Hexachlorocyclopentadiene	µg/L	--	--	--	< 5	--	< 5
Hexachloroethane	µg/L	--	--	--	< 1	--	< 1
Indeno(1,2,3-cd)Pyrene	µg/L	--	--	--	< 0.02	--	< 0.02
Isophorone	µg/L	--	--	--	1	--	1
Naphthalene	µg/L	--	--	--	< 1	--	< 1
Nitrobenzene	µg/L	--	--	--	< 1	--	< 1

Parameter	Units	Effluent Limitation			Monitoring Data[1] (From 08/01/2003 To 12/31/2007)		
		Average Monthly	Average Weekly	Maximum Daily	Highest Average Monthly Discharge	Highest Average Weekly Discharge[2, 3]	Highest Daily Discharge
N-Nitrosodimethylamine	µg/L	--	--	--	< 5	--	< 5
N-Nitrosodi-n-Propylamine	µg/L	--	--	--	<20	--	<20
N-Nitrosodiphenylamine	µg/L	--	--	--	< 1	--	< 1
Phenanthrene	µg/L	--	--	--	< 5	--	< 5
Pyrene	µg/L	--	--	--	< 10	--	< 10
1,2,4-Trichlorobenzene	µg/L	--	--	--	< 5	--	< 5
Aldrin	µg/L	--	--	--	< 0.01	--	< 0.01
Alpha-BHC	µg/L	--	--	--	< 0.01	--	< 0.01
Beta-BHC	µg/L	--	--	--	< 0.01	--	< 0.01
Gamma-BHC (aka Lindane)	µg/L	0.2	--	--	<0.01	--	<0.01
delta-BHC	µg/L	--	--	--	< 0.01	--	< 0.01
Chlordane	µg/L	--	--	--	< 0.05	--	< 0.05
4,4'-DDT	µg/L	--	--	--	< 0.01	--	< 0.01
4,4'-DDE	µg/L	0.05	--	--	< 0.01	--	< 0.01
4,4'-DDD	µg/L	--	--	--	< 0.01	--	< 0.01
Dieldrin	µg/L	--	--	--	< 0.01	--	< 0.01
Alpha-Endosulfan	µg/L	--	--	--	< 0.01	--	< 0.01
Beta-Endosulfan	µg/L	--	--	--	< 0.01	--	< 0.01
Endosulfan Sulfate	µg/L	--	--	--	< 0.1	--	< 0.1
Endrin	µg/L	2	--	--	<0.1	--	<0.1
Endrin Aldehyde	µg/L	--	--	--	< 0.04	--	< 0.04
Heptachlor	µg/L	--	--	--	< 0.01	--	< 0.01
Heptachlor Epoxide	µg/L	--	--	--	<0.05	--	<0.05
PCB 1016	µg/L	--	--	--	< 0.1	--	< 0.1
PCB 1221	µg/L	--	--	--	< 0.5	--	< 0.5
PCB 1232	µg/L	--	--	--	< 0.3	--	< 0.3
PCB 1242	µg/L	--	--	--	< 0.1	--	< 0.1
PCB 1248	µg/L	--	--	--	< 0.1	--	< 0.1
PCB 1254	µg/L	--	--	--	< 0.05	--	< 0.05
PCB 1260	µg/L	--	--	--	< 0.1	--	< 0.1
Toxaphene	µg/L	3	--	--	< 0.1	--	< 0.1
Barium	µg/L	1000	--	--	129	--	129
Iron	µg/L	300	--	--	143	--	143
Methoxychlor	µg/L	40	--	--	10	--	10

Parameter	Units	Effluent Limitation			Monitoring Data[1] (From 08/01/2003 To 12/31/2007)		
		Average Monthly	Average Weekly	Maximum Daily	Highest Average Monthly Discharge	Highest Average Weekly Discharge[2, 3]	Highest Daily Discharge
2,4-D	µg/L	70	--	--	2	--	2
2,4,5-TP (Sylvex)	µg/L	10	--	--	3	--	3
Halomethanes	µg/L	80	--	--	90.8	--	90.8

D. Compliance Summary

Effluent limit violations

Twenty eight violations of Order No. R4-2003-0081 were noted in the Permittee's self monitoring reports during the period November 2003 through December 2006. These violations include effluent limit exceedances for turbidity, chloride, trihalomethanes, and cyanide.

Reporting violations

Thirty five reporting violations of Order No. R4-2003-0081 were noted in the Permittee's self monitoring reports during the period October 2003 through November 2006. Ammonium perchlorate, N-nitrosodimethylamine (NDMA), delta-BHC, asbestos, and fecal coliform were not monitored as required by the Monitoring and Reporting Program.

E. Planned Changes

The Discharger is in the process of upgrading the NDN process at the Simi Valley WQCP to improve the quality of nitrate plus nitrite as nitrogen in the effluent. This plant upgrade is discussed in the Time Schedule Order No. R4-2007-0038 issued on August 9, 2007. The planned improvements are expected to be completed by April 30, 2009.

III. APPLICABLE PLANS, POLICIES, AND REGULATIONS

The requirements contained in the proposed Order are based on the requirements and authorities described in this section.

A. Legal Authorities

This Order is issued pursuant to section 402 of the federal Clean Water Act (CWA) and implementing regulations adopted by the U.S. Environmental Protection Agency (USEPA) and chapter 5.5, division 7 of the California Water Code (commencing with section 13370). It shall serve as an NPDES permit for point source discharges from this facility to surface waters. This Order also serves as Waste Discharge Requirements (WDRs) pursuant to article 4, chapter 4, division 7 of the Water Code (commencing with section 13260).

B. California Environmental Quality Act (CEQA)

Under Water Code section 13389, this action to adopt an NPDES permit is exempt from the provisions of CEQA, Public Resources Code sections 21100 through 21177.

C. State and Federal Regulations, Policies, and Plans

1. **Water Quality Control Plans.** The Regional Water Quality Control Board (Regional Water Board) adopted a Water Quality Control Plan for the Los Angeles Region (hereinafter Basin Plan) on June 13, 1994 that designates beneficial uses, establishes water quality objectives, and contains implementation programs and policies to achieve those objectives for all waters addressed through the plan. In addition, the Basin Plan implements State Water Resources Control Board (State Water Board) Resolution No. 88-63, which established state policy that all waters, with certain exceptions, should be considered suitable or potentially suitable for municipal or domestic supply. Beneficial uses applicable to Arroyo Simi and Calleguas Creek are as follows:

Table 3a. Basin Plan Beneficial Uses – Receiving Waters

Discharge Point	Receiving Water Name	Beneficial Use(s)
001, 002	Arroyo Simi (Hydro. Unit No. 403.62)	Existing: Wildlife habitat (WILD), and rare, threatened, or endangered species (RARE) Intermittent: Industrial service supply (IND), ground water recharge (GWR), freshwater replenishment (FRSH), water contact recreation (REC-1), non-contact water recreation (REC-2), and warm freshwater habitat (WARM) Potential: Municipal and domestic water supply (MUN[4]).
001, 002	Arroyo Las Posas (Hydro. Unit No. 403.62)	Existing: Ground water recharge (GWR), freshwater replenishment (FRSH), water contact recreation (REC-1), non-contact water recreation (REC-2), warm freshwater habitat (WARM), and wildlife habitat (WILD). Intermittent: none Potential: Municipal and domestic water supply (MUN[4]), industrial service supply (IND), industrial process supply (PROC), agricultural supply (AGR), and cold freshwater habitat (COLD).

[4] The potential MUN beneficial use for the water body is consistent with Regional Board Resolution 89-03; however, the Regional Board has only conditionally designated the MUN beneficial uses and at this time cannot establish effluent limitation designed to protect the conditional designation.

Discharge Point	Receiving Water Name	Beneficial Use(s)
001, 002	Arroyo Las Posas (Hydro. Unit No. 403.12)	Existing: Ground water recharge (GWR), water contact recreation (REC-1), non-contact water recreation (REC-2), warm freshwater habitat (WARM), and wildlife habitat (WILD). Intermittent: none Potential: Municipal and domestic water supply (MUN[4]), industrial service supply (IND), industrial process supply (PROC), agricultural supply (AGR), and cold freshwater habitat (COLD).
001, 002	Calleguas Creek (Hydro. Unit No. 403.12)	Existing: Industrial service supply (IND), industrial process supply (PROC), agricultural supply (AGR), ground water recharge (GWR), water contact recreation (REC-1[5]), non-contact water recreation (REC-2), warm freshwater habitat (WARM), and wildlife habitat (WILD). Intermittent: none Potential: Municipal and domestic water supply (MUN[4])
001, 002	Calleguas Creek (Hydro. Unit No. 403.11)	Existing: Agricultural supply (AGR), ground water recharge (GWR), freshwater replenishment (FRSH), water contact recreation (REC-1), non-contact water recreation (REC-2), warm freshwater habitat (WARM), cold freshwater habitat (COLD), wildlife habitat (WILD), rare, threatened, or endangered species (RARE[6]), and wetland habitat (WET). Intermittent: none Potential: Municipal and domestic water supply (MUN[4])

[5] Whenever flow conditions are suitable.
[6] Habitat of the Clapper Rail.

Discharge Point	Receiving Water Name	Beneficial Use(s)
001, 002	Calleguas Creek Estuary (Hydro. Unit No. 403.11)	Existing: Non-contact water recreation (REC-2), commercial and sport fishing (COMM), estuarine habitat (EST), wildlife habitat (WILD), rare, threatened, or endangered species (RARE[6,7]), migration of aquatic organisms (MIGR[8]), spawning, reproduction, and/or early development (SPWN[8]), and wetland habitat (WET). Intermittent: none Potential: Navigation (NAV), and water contact recreation (REC-1[9]).
001, 002	Mugu Lagoon (Hydro. Unit No. 403.11)	Existing: Navigation (NAV), non-contact water recreation (REC-2), commercial and sport fishing (COMM[10]), estuarine habitat (EST), marine habitat (MAR), wildlife habitat (WILD[11]), preservation of biological habitats (BIOL), rare, threatened, or endangered species (RARE[6,7]), migration of aquatic organisms (MIGR[8]), spawning, reproduction, and/or early development (SPWN[8]), shellfish harvesting (SHELL[10]), wetland habitat (WET). Intermittent: None Potential: Water contact recreation (REC-1[9])

Beneficial uses of the receiving ground waters are as follows:

Table 3b. Basin Plan Beneficial Uses – Ground Waters

Discharge Point	Basin Name	Beneficial Use(s)
	Simi Valley Basin DWR Basin No. 4-9 Confined Aquifers	Existing: Municipal and domestic water supply (MUN), industrial service supply (IND), industrial process supply (PROC), and agricultural supply (AGR)

[7] One or more rare species utilize all ocean, bays, estuaries, and coastal wetlands for foraging and/or nesting.
[8] Aquatic organisms utilize all bays, estuaries, lagoons and coastal wetlands, to a certain extent, for spawning and early development. This may include migration into areas which are heavily influenced by freshwater inputs.
[9] Area is currently under the control of the Navy: swimming is prohibited.
[10] Limited public access precludes full utilization.
[11] Marine habitats of the Channel Islands and Mugu Lagoon serve as pinniped haul-out areas for one or more species (i.e., sea lions).

Discharge Point	Basin Name	Beneficial Use(s)
001, 002	Simi Valley Basin DWR Basin No. 4-9 Unconfined Aquifers	Existing: Municipal and domestic water supply (MUN), industrial service supply (IND), industrial process supply (PROC), and agricultural supply (AGR)
001, 002	Las Posas Valley DWR Basin No. 4-8 South Basin	Existing: Municipal and domestic water supply (MUN), industrial service supply (IND), industrial process supply (PROC), and agricultural supply (AGR)
	Las Posas Valley DWR Basin No. 4-8 North Basin	Existing: Municipal and domestic water supply (MUN), industrial service supply (IND), industrial process supply (PROC), and agricultural supply (AGR)
001, 002	Pleasant Valley (Ventura Central Basin) DWR Basin No. 4-6 Confined Aquifers	Existing: Municipal and domestic water supply (MUN), industrial service supply (IND), industrial process supply (PROC), and agricultural supply (AGR)
	Pleasant Valley (Ventura Central Basin) DWR Basin No. 4-6 Unconfined Aquifers	Existing: Industrial service supply (IND), industrial process supply (PROC), and agricultural supply (AGR) Potential: Municipal and domestic water supply (MUN)
001, 002	Oxnard Plain (Ventura Central Basin) DWR Basin No. 4-4 Oxnard Forebay	Existing: Municipal and domestic water supply (MUN), industrial service supply (IND), industrial process supply (PROC), and agricultural supply (AGR)
	Oxnard Plain (Ventura Central Basin) DWR Basin No. 4-4 Confined Aquifers	Existing: Municipal and domestic water supply (MUN), industrial process supply (PROC), and agricultural supply (AGR)
	Oxnard Plain (Ventura Central Basin) DWR Basin No. 4-4 Unconfined Aquifers	Existing: Municipal and domestic water supply (MUN) and agricultural supply (AGR) Potential: Industrial service supply (IND)

Requirements of this Order implement the Basin Plan and subsequent amendments.

2. **National Toxics Rule (NTR) and California Toxics Rule (CTR).** USEPA adopted the NTR on December 22, 1992, and later amended it on May 4, 1995 and November 9, 1999. About forty criteria in the NTR applied in California. On May 18, 2000, USEPA adopted the CTR. The CTR promulgated new toxics criteria for California and, in addition, incorporated the previously adopted NTR criteria that were applicable in the state. The CTR was amended on February 13, 2001. These rules contain water quality criteria for priority pollutants.

3. **State Implementation Policy.** On March 2, 2000, the State Water Board adopted the *Policy for Implementation of Toxics Standards for Inland Surface Waters, Enclosed Bays, and Estuaries of California* (State Implementation Policy or SIP). The SIP became effective on April 28, 2000 with respect to the priority pollutant criteria promulgated for California by the USEPA through the NTR and to the priority pollutant objectives established by the Regional Water Board in the Basin Plan. The SIP became effective on May 18, 2000 with respect to the priority pollutant criteria promulgated by the USEPA through the CTR. The State Water Board adopted amendments to the SIP on February 24, 2005 that became effective on July 13, 2005. The SIP establishes implementation provisions for priority pollutant criteria and objectives and provisions for chronic toxicity control. Requirements of this Order implement the SIP.

4. **Alaska Rule.** On March 30, 2000, USEPA revised its regulation that specifies when new and revised state and tribal water quality standards (WQS) become effective for CWA purposes (40 C.F.R. §131.21, 65 Fed. Reg. 24641 (April 27, 2000)). Under the revised regulation (also known as the Alaska rule), new and revised standards submitted to USEPA after May 30, 2000, must be approved by USEPA before being used for CWA purposes. The final rule also provides that standards already in effect and submitted to USEPA by May 30, 2000, may be used for CWA purposes, whether or not approved by USEPA.

5. **Antidegradation Policy.** Section 131.12 requires that the state water quality standards include an antidegradation policy consistent with the federal policy. The State Water Board established California's antidegradation policy in State Water Board Resolution No. 68-16. Resolution No. 68-16 incorporates the federal antidegradation policy where the federal policy applies under federal law. Resolution No. 68-16 requires that existing water quality be maintained unless degradation is justified based on specific findings. The Regional Water Board's Basin Plan implements, and incorporates by reference, both the State and federal antidegradation policies. The permitted discharge must be consistent with the antidegradation provision of section 131.12 and State Water Board Resolution No. 68-16.

6. **Anti-Backsliding Requirements.** Sections 402(o)(2) and 303(d)(4) of the CWA and federal regulations at title 40, Code of Federal Regulations[12] part 122.44(l) prohibit backsliding in NPDES permits. These anti-backsliding provisions require that effluent limitations in a reissued permit must be as stringent as those in the previous permit, with some exceptions in which limitations may be relaxed. All conventional and non-conventional pollutants effluent limitations in the Order are at least as stringent as the effluent limitations in the previous Order. Most of the priority pollutants from the previous Order were deleted because they did not show reasonable potential to be in the effluent water. Specifically, new information on effluent and receiving monitoring data indicated that the following pollutants has no reasonable potential; antimony, arsenic, cadmium, chromium VI, lead, silver, thallium, zinc, tetrachloroethylene 1,4-dichlorobenzene, and lindane (gamma-BHC). As discussed in this Fact Sheet, this relaxation of effluent limitations is consistent with the anti-backsliding requirements of the CWA and federal regulations.

D. Impaired Water Bodies on CWA 303(d) List

On October 25, 2006, the State Water Board adopted a revised 303(d) List. The 2006 303(d) List was partially approved by the USEPA on November 30, 2006. However, on March 8, 2007, USEPA partially disapproved the State's 303(d) List, by disapproving the State's omission of impaired waters that met federal listing regulations or guidance. USEPA is adding 64 waters and 37 associated pollutants to the State's 303(d) List. On June 28, 2007, USEPA transmitted the final approved 2004-2006 Section 303(d) List, which serves as the State's most recent list of impaired waterbodies. The List (hereinafter referred to as the 303(d) List) was prepared in accordance with Section 303(d) of the Federal Clean Water Act to identify specific impaired waterbodies where water quality standards are not expected to be met after implementation of technology-based effluent limitations on point sources.

Calleguas Creek and its tributaries are on the 303(d) List for the following pollutants/ stressors, from point and non-point sources:

<u>Calleguas Creek Reach 7</u> (was Arroyo Simi Reaches 1 and 2 on 1998 303(d) List) --Hydrologic unit 403.67
Boron, chloride, fecal coliform, sedimentation/siltation, sulfates, total dissolved solids

<u>Calleguas Creek Reach 6</u> (was Arroyo Las Posas Reaches 1 and 2 on 1998 303(d) List) --Hydrologic unit 403.62
Chloride, fecal coliform, sedimentation/siltation, sulfates, total dissolved solids

<u>Calleguas Creek Reach 3</u> (Potrero Road upstream to confluence with Conejo Creek on 1998 303(d) List) --Hydrologic unit 403.12
Chloride, sedimentation/siltation, total dissolved solids

[12] All further statutory references are to title 40 of the Code of Federal Regulations unless otherwise indicated.

Calleguas Creek Reach 2 (Estuary to Potrero Road - was Calleguas Creek Reaches 1 and 2 on 1998 303(d) List) --Hydrologic unit 403.12
ChemA (tissue), endosulfan (tissue), fecal coliform, sedimentation/siltation

Calleguas Creek Reach 1 (was Mugu Lagoon on 1998 303(d) List) --Hydrologic unit 403.11
Endosulfan (tissue)

E. Other Plans, Polices and Regulations

1. **Sources of Drinking Water Policy**. On May 19, 1988, the State Board adopted Resolution No. 88-63, *Sources of Drinking Water (SODW) Policy*, which established a policy that all surface and ground waters, with limited exemptions, are suitable or potentially suitable for municipal and domestic supply. To be consistent with State Board's SODW policy, on March 27, 1989, the Regional Board adopted Resolution No. 89-03, *Incorporation of Sources of Drinking Water Policy into the Water Quality Control Plans (Basin Plans) – Santa Clara River Basin (4A)/ Los Angeles River Basin (4B).*

   Consistent with Regional Board Resolution No. 89-03 and State Board Resolution No. 88-63, in 1994 the Regional Board conditionally designated all inland surface waters in Table 2-1 of the 1994 Basin Plan as existing, intermittent, or potential for Municipal and Domestic Supply (MUN). However, the conditional designation in the 1994 Basin Plan included the following implementation provision: "no new effluent limitations will be placed in Waste Discharge Requirements as a result of these [potential MUN designations made pursuant to the SODW policy and the Regional Board's enabling resolution] until the Regional Board adopts [a special Basin Plan Amendment that incorporates a detailed review of the waters in the Region that should be exempted from the potential MUN designations arising from SODW policy and the Regional Board's enabling resolution]." On February 15, 2002, the USEPA clarified its partial approval (May 26, 2000) of the 1994 Basin Plan amendments and acknowledged that the conditional designations do not currently have a legal effect, do not reflect new water quality standards subject to USEPA review, and do not support new effluent limitations based on the conditional designations stemming from the SODW Policy until a subsequent review by the Regional Board finalizes the designations for these waters. This permit is designed to be consistent with the existing Basin Plan.

2. **Secondary Treatment Regulations**. Part 133 of 40 C.F.R. establishes the minimum levels of effluent quality to be achieved by secondary treatment. These limitations, established by USEPA, are incorporated into this Order, except where more stringent limitations are required by other applicable plans, policies, or regulations or to prevent backsliding.

~~3.~~**Storm Water**. ~~CWA section 402(p), as amended by the Water Quality Act of 1987, requires NPDES permits for storm water discharges. Pursuant to this requirement, in 1990, USEPA promulgated 40 C.F.R. Part 122.26 that established requirements~~

~~for storm water discharges under an NPDES program. To facilitate compliance with federal regulations, on November 1991, the State Board issued a statewide general permit, *General NPDES Permit No. CAS000001 and Waste Discharge Requirements for Discharges of Storm Water Associated with Industrial Activities.* This permit was amended in September 1992 and reissued on April 17, 1997 in State Board Order No. 97-03-DWQ to regulate storm water discharges associated with industrial activity.~~

~~General NPDES permit No. CAS000001 is applicable to storm water discharges from the Simi Valley WQCP's premises. On March 11, 1992, the City filed a Notice of Intent to comply with the requirements of the general permit. The City developed and currently implements a Storm Water Pollution Prevention Plan (SWPPP), to comply with the State Board's (Order No. 97-03-DWQ).~~

~~4.~~3. **Sanitary Sewer Overflows.** The Clean Water Act prohibits the discharge of pollutants from point sources to surface waters of the United States unless authorized under an NPDES permit. (33 U.S.C. §§1311, 1342). The State Board adopted Statewide General Waste Discharge Requirements (WDRs) for Sanitary Sewer Systems, Water Quality Order No. 2006-0003 on May 2, 2006, to provide a consistent, statewide regulatory framework to address Sanitary Sewer Overflows (SSOs). The WDR requires public agencies that own or operate sanitary sewer systems to develop and implement sewer system management plans and report all SSOs to the State Water Board's online SSO database.

The requirements contained in this Order in Sections VI.C.3.b, VI.C.4, and VI.C.6. are intended to be consistent with the requirements in the SSO WDR. The Regional Water Board recognizes that there are areas of overlapping interest between the NPDES permit conditions and the SSO WDR requirements. The requirements of the SSO WDR are considered the minimum thresholds (see Finding 11 of WQ Order N0. 2006-0003). The Regional Water Board will accept the documentation prepared by the Permittee under the SSO WDR for compliance purposes, as satisfying the requirements in Sections VI.C.3.b, VI.C.4, and VI.C.6, provided for any more specific or stringent provisions enumerated in this Order, have also been addressed.

Watershed Management - This Regional Water Board has been implementing a Watershed Management Approach (WMA), to address water quality protection in the Los Angeles Region, as detailed in the Watershed Management Initiative (WMI). The WMI is designed to integrate various surface and ground water regulatory programs while promoting cooperative, collaborative efforts within a watershed. It is also designed to focus limited resources on key issues and use sound science. Information about the Calleguas Creek Watershed and other watersheds in the region can be obtained from the Regional Water Board's web site at http://www.waterboards.ca.gov/losangeles/water_issues/programs/regional_program/index.shtml#watershed.

~~5.~~4. **Relevant Total Maximum Daily Loads -** Section 303(d) of the Clean Water Act requires states to identify water bodies that do not meet water quality standards and

then to establish TMDLs for each waterbody for each pollutant of concern. TMDLs identify the maximum amount of pollutants that can be discharged to waterbodies without causing violations of water quality standards.

a. **Calleguas Creek Watershed Chloride TMDL** - On March 22, 2002, USEPA Region 9 established the Calleguas Creek Total Maximum Daily Load for chloride (*USEPA Chloride TMDL*) in accordance with Section 303(d) of the Clean Water Act, because the State of California was not going to be able to complete adoption of the Calleguas Creek Chloride TMDL by the March 22, 2002 consent decree deadline. USEPA used the 150 mg/L objective in the Basin Plan and lower in stream targets to establish mass-based waste load allocations (WLAs) and load allocations (LAs) for all identified sources of chloride in the watershed. The *USEPA Chloride TMDL* established a WLA of 10,100 lbs/day for the Simi Valley WQCP during normal conditions, and a WLA of 9,200 lbs/day during drought conditions. Once the Regional Board-adopted Calleguas Creek Watershed Salts TMDL has gone through the full approval process, the chloride WLA contained in the Calleguas Creek Watershed Salts TMDL will supersede the chloride WLA specified in USEPA's Calleguas Creek Watershed Chloride TMDL.

b. **Calleguas Creek Watershed Nitrogen Compounds and Related Effects TMDL** - On October 24, 2002, the Regional Board adopted Resolution No. 02-017, *Amendment to the Water Quality Control Plan for the Los Angeles Region to Include a TMDL for Nitrogen Compounds and Related Effects in Calleguas Creek (Nitrogen Compounds TMDL)*. This Resolution was approved by the State Water Resources Control Board, Office of Administrative Law, and USEPA on March 19, 2003, June 5, 2003, and June 20, 2003, respectively. This Order includes effluent limitations for nitrogen compounds established by Nitrogen Compounds TMDL which became effective on July 16, 2003.

c. **Calleguas Creek Toxicity, Chlorpyrifos, and Diazinon TMDL** - On July 7, 2005, the Regional Board adopted Resolution No. R4-2005-009, *Amendment to the Water Quality Control Plan for the Los Angeles Region to Incorporate a Total Maximum Daily Load for Toxicity, Chlorpyrifos, and Diazinon in Calleguas Creek, its Tributaries, and Mugu Lagoon (Toxicity TMDL)*. This Resolution was approved by the State Water Resources Control Board, Office of Administrative Law, and USEPA on September 22, 2005, November 27, 2005, and March 14, 2006, respectively. This Order includes effluent limitations for chlorpyrifos and diazinon established by the Toxicity TMDL which became effective on March 24, 2006. However, the toxicity WLA will be implemented in accordance with USEPA, State Board, and Regional Board resolutions, guidance, and policy at the time of permit issuance or renewal. Currently, this WLA would be implemented as a trigger for initiation of the TRE/TIE process as outlined in USEPA's "Understanding and Accounting for Method Variability in Whole Effluent Toxicity Applications Under the National Pollutant Discharge Elimination System Program" (2000) and current NPDES permit held by discharger to the Calleguas Creek Watershed.

d. **Calleguas Creek OC Pesticides and PCBS TMDL** - On July 7, 2005, the Regional Board adopted Resolution No. R4-2005-010, *Amendment to the Water Quality Control Plan for the Los Angeles Region to Incorporate a Total Maximum Daily Load for Organochlorine Pesticides, Polychlorinated Biphenyls, and Siltation in Calleguas Creek, its Tributaries, and Mugu Lagoon (OC Pesticides and PCBs TMDL)*. This Resolution was approved by the State Water Resources Control Board, Office of Administrative Law, and USEPA on September 22, 2005, January 20, 2006, and March 14, 2006, respectively. This Order includes effluent limitations for OC pesticides and PCBs established by the OC Pesticides and PCBs TMDL which became effective on March 24, 2006.

e. **Calleguas Creek Watershed Metals TMDL** – June 8, 2006, the Regional Board adopted Resolution No. R4-2006-012, *Amendment to the Water Quality Control Plan for the Los Angeles Region to Incorporate a Total Maximum Daily Load for Metals for the Calleguas Creek, its Tributaries, and Mugu Lagoon (Metals TMDL)*. This Resolution was approved by the State Water Resources Control Board, Office of Administrative Law, and USEPA on October 25, 2006, February 6, 2007, and March 26, 2007, respectively. This Order includes effluent limitations for metals established by the Metals TMDL which became effective on March 26, 2007.

   1. **Calleguas Creek Copper WER** – November 9, 2006, the Regional Board adopted Resolution No. R4-2006-022, *Amendment to the Water Quality Control Plan for the Los Angeles Region Water Effects Ratios (WERs) for Copper in Lower Calleguas Creek and Mugu Lagoon Located in the Calleguas Creek Watershed, Ventura County (Copper WER)*. This Resolution was approved by the State Water Resources Control Board, Office of Administrative Law, and USEPA on June 19, 2007, August 16, 2007, and August 23, 2007, respectively. However, a copper WER is not relevant to the discharge of Simi Valley WQCP because the discharged effluent does not reach lower Calleguas Creek and Mugu Lagoon. Therefore, a copper WER will not be applied in this permit.

f. **Calleguas Creek Watershed Salts TMDL** - On October 4, 2007, the Regional Water Board adopted Resolution No. R4-2007-016, *Amendment to the Water Quality Control Plant – Los Angeles Region to Incorporate the Total Maximum Daily Load for Boron, Chloride, Sulfate, and TDS (Salts) in the Calleguas Creek Watershed.* On May 20, 2008, the State Board approved the *Calleguas Creek Salts TMDL*. However, it is pending approval from OAL and USEPA. The Calleguas Creek Watershed Salts TMDL will become effective at the conclusion of the approval process.

IV. RATIONALE FOR EFFLUENT LIMITATIONS AND DISCHARGE SPECIFICATIONS

The CWA requires point source dischargers to control the amount of conventional, non-conventional, and toxic pollutants that are discharged into the waters of the United States.

The control of pollutants discharged is established through effluent limitations and other requirements in NPDES permits. There are two principal bases for effluent limitations in the Code of Federal Regulations: Part 122.44(a) requires that permits include applicable technology-based limitations and standards; and Part 122.44(d) requires that permits include water quality-based effluent limitations to attain and maintain applicable numeric and narrative water quality criteria to protect the beneficial uses of the receiving water.

A. Discharge Prohibitions

Effluent and receiving water limitations in this Board Order are based on the Federal Clean Water Act, Basin Plan, State Water Board's plans and policies, U. S. Environmental Protection Agency guidance and regulations, and best practicable waste treatment technology. This order authorizes the discharge of tertiary-treated wastewater from Discharge Point 001 and Discharge Point 002. It does not authorize any other types of discharges.

B. Technology-Based Effluent Limitations

1. Scope and Authority

Technology-based effluent limits require a minimum level of treatment for industrial/municipal point sources based on currently available treatment technologies while allowing the discharger to use any available control techniques to meet the effluent limits. The 1972 CWA required POTWs to meet performance requirements based on available wastewater treatment technology. Section 301 of the CWA established a required performance level--referred to as "secondary treatment" --that all POTWs were required to meet by July 1, 1977. More specifically, Section 301(b)(1)(B) of the CWA required that USEPA develop secondary treatment standards for POTWs as defined in Section 304(d)(1). Based on this statutory requirement, USEPA developed national secondary treatment regulations which are specified in 40 C.F.R. 133. These technology- based regulations apply to all POTWs and identify the minimum level of effluent quality to be attained by secondary treatment in terms of five-day biochemical oxygen demand, total suspended solids, and pH.

2. Applicable Technology-Based Effluent Limitations

This facility is subject to the technology-based regulations for the minimum level of effluent quality attainable by secondary treatment in terms of $BOD_5 20^oC$, TSS, and pH. However, all technology-based effluent limitations from the previous Order No. R4-2003-0081 are based on tertiary-treated wastewater treatment standards. These effluent limitations have been carried over from the previous Order to avoid backsliding. Further, mass-based effluent limitations are based on a design flow rate of 12.5 MGD. The following Table summarizes the technology-based effluent limitations applicable to the Facility:

Summary of Technology-based Effluent Limitations
Discharge Points 001 and 002

Table 4. Summary of Technology-based Effluent Limitations

Parameter	Units	Effluent Limitations				
		Average Monthly	Average Weekly	Maximum Daily	Instantaneous Minimum	Instantaneous Maximum
$BOD_5 20^oC$	mg/L	20	30	45		
	lbs/day[1]	2,080	3,130	4,690		
Total Suspended Solids (TSS)	mg/L	15	40	45		
	lbs/day[1]	1,560	4,170	4,690		
pH	standard units	--	--	--	6.5	8.5
Removal Efficiency for BOD and TSS	%	85	--	--		

However, this facility is also subject to technology-based effluent limitations contained in similar NPDES permits, for similar facilities, based on the treatment level achievable by tertiary-treated wastewater treatment systems. These effluent limitations are consistent with the State Water Board precedential decision, State Water Board Order No. WQ 2004-0010 for the City of Woodland.

[1] The mass emission rates are based on the plant design flow rate of 12.5 mgd, and are calculated as follows: Flow (MGD) x Concentration (mg/L) x 8.34 (conversion factor) = lbs/day. During wet-weather storm events in which the flow exceeds the design capacity, the mass discharge rate limitations shall not apply, and concentration limitations will provide the only applicable effluent limitations.

C. Water Quality-Based Effluent Limitations (WQBELs)

1. Scope and Authority

Section 301(b) of the CWA and Part 122.44(d) require that permits include limitations more stringent than applicable federal technology-based requirements where necessary to achieve applicable water quality standards. This Order contains requirements, expressed as a technology equivalence requirement, more stringent than secondary treatment requirements that are necessary to meet applicable water quality standards. The rationale for these requirements, which consist of tertiary treatment or equivalent requirements or other provisions, is discussed starting from Section IV.C.2.

Part 122.44(d)(1)(i) mandates that permits include effluent limitations for all pollutants that are or may be discharged at levels that have the reasonable potential to cause or contribute to an exceedance of a water quality standard, including numeric and narrative objectives within a standard. Where reasonable potential has been established for a pollutant, but there is no numeric criterion or objective for the pollutant, water quality-based effluent limitations (WQBELs) must be established using: (1) USEPA criteria guidance under CWA section 304(a), supplemented where necessary by other relevant information; (2) an indicator parameter for the pollutant of concern; or (3) a calculated numeric water quality criterion, such as a proposed state criterion or policy interpreting the state's narrative criterion, supplemented with other relevant information, as provided in Part 122.44(d)(1)(vi).

The process for determining reasonable potential and calculating WQBELs when necessary is intended to protect the designated uses of the receiving water as specified in the Basin Plan, and achieve applicable water quality objectives and criteria that are contained in other state plans and policies, or any applicable water quality criteria contained in the CTR and NTR.

2. Applicable Beneficial Uses and Water Quality Criteria and Objectives

a. The Basin Plan establishes the beneficial uses for surface water bodies in the Los Angeles region. The beneficial uses of the Arroyo Simi affected by the discharge have been described previously in this Fact Sheet.

b. The Basin Plan also specifies narrative and numeric water quality objectives applicable to surface water as shown in the following discussions.

i. **Biochemical Oxygen Demand (BOD) and Suspended Solids**

Biochemical oxygen demand (BOD) is a measure of the quantity of the organic matter in the water and, therefore, the water's potential for becoming depleted in dissolved oxygen. As organic degradation takes place, bacteria and other decomposers use the oxygen in the water for respiration. Unless there is a

steady resupply of oxygen to the system, the water will quickly become depleted of oxygen. Adequate dissolved oxygen levels are required to support aquatic life. Depressions of dissolved oxygen can lead to anaerobic conditions resulting in odors, or, in extreme cases, in fish kills.

40 C.F.R. Part 133 describes the minimum level of effluent quality attainable by secondary treatment, for BOD and suspended solids, as:

- The 30-day average shall not exceed 30 mg/L, and
- The 7-day average shall not exceed 45 mg/L.

Simi Valley WQCP provides tertiary treatment, as such, the BOD and suspended solids limits in the permit are more stringent than secondary treatment requirements and are based on Best Professional Judgment (BPJ). The Plant achieves solids removal that is better than secondary-treated wastewater by adding a polymer (Alum) to enhance the precipitation of solids, and by filtering the effluent.

The monthly average, the 7-day average, and the daily maximum limits cannot be removed because none of the antibacksliding exceptions apply. Those limits were all included in the previous permit (Order R4-2003-0081) and the Simi Valley WQCP has been able to meet all three limits (monthly average, the 7-day average, and the daily maximum), for both BOD and suspended solids.

In addition to having mass-based and concentration-based effluent limitations for BOD and suspended solids, the Simi Valley WQCP also has a percent removal requirement for these two constituents. In accordance with 40 C.F.R. Parts 133.102(a)(3) and 133.102(b)(3), the 30-day average percent removal shall not be less than 85 percent. Percent removal is defined as a percentage expression of the removal efficiency across a treatment plant for a given pollutant parameter, as determined from the 30-day average values of the raw wastewater influent pollutant concentrations to the facility and the 30-day average values of the effluent pollutant concentrations for a given time period.

ii. **pH**

The hydrogen ion activity of water (pH) is measured on a logarithmic scale, ranging from 0 to 14. While the pH of “pure” water at 25°C is 7.0, the pH of natural waters is usually slightly basic due to the solubility of carbon dioxide from the atmosphere. Minor changes from natural conditions can harm aquatic life. In accordance with 40 C.F.R. Part 133.102(c), the effluent values for pH shall be maintained within the limits of 6.0 to 9.0 unless the POTW demonstrates that: (1) Inorganic chemicals are not added to the waste stream as part of the treatment process; and (2) contributions from industrial sources do not cause the pH of the effluent to be less than 6.0 or greater than 9.0.

The effluent limitation for pH in this permit requiring that the wastes discharged shall at all times be within the range of 6.5 to 8.5 is taken from the Basin Plan (page 3-15) which reads "the pH of inland surface waters shall not be depressed below 6.5 or raised above 8.5 as a result of waste discharge."

iii. **Settleable solids**

Excessive deposition of sediments can destroy spawning habitat, blanket benthic (bottom dwelling) organisms, and abrade the gills of larval fish. The limits for settleable solids are based on the Basin Plan (page 3-16) narrative, "Waters shall not contain suspended or settleable material in concentrations that cause nuisance or adversely affect beneficial uses." The numeric limits are empirically based on results obtained from the settleable solids 1-hour test, using an Imhoff cone.

It is impracticable to use a 7-day average limitation, because short-term spikes of settleable solid levels that would be permissible under a 7-day average scheme would not be adequately protective of all beneficial uses. The monthly average and the daily maximum limits cannot be removed because none of the antibacksliding exceptions apply. The monthly average and daily maximum limits were both included in the previous permit (Order R4-2003-0081) and the Simi Valley WQCP has been able to meet both limits.

iv. **Oil and grease**

Oil and grease are not readily soluble in water and form a film on the water surface. Oily films can coat birds and aquatic organisms, impacting respiration and thermal regulation, and causing death. Oil and grease can also cause nuisance conditions (odors and taste), are aesthetically unpleasant, and can restrict a wide variety of beneficial uses. The limits for oil and grease are based on the Basin Plan (page 3-11) narrative, "Waters shall not contain oils, greases, waxes, or other materials in concentrations that result in a visible film or coating on the surface of the water or on objects in the water, that cause nuisance, or that otherwise adversely affect beneficial uses."

The numeric limits are empirically based on concentrations at which an oily sheen becomes visible in water. It is impracticable to use a 7-day average limitation, because spikes that occur under a 7-day average scheme could cause a visible oil sheen. A 7-day average scheme would not be sufficiently protective of beneficial uses. The monthly average and the daily maximum limits cannot be removed because none of the antibacksliding exceptions apply. Both limits were included in the previous permit (Order R4-2003-0081) and the Simi Valley WQCP has been able to meet both limits.

v. **Residual Chlorine**

Disinfection of wastewaters with chlorine produces a chlorine residual. Chlorine and its reaction products are toxic to aquatic life. The limit for residual chlorine is based on the Basin Plan (page 3-9) narrative, "Chlorine residual shall not be present in surface water discharges at concentrations that exceed 0.1 mg/L and shall not persist in receiving waters at any concentration that causes impairment of beneficial uses."

It is impracticable to use a 7-day average or a 30-day average limitation because it is not as protective as of beneficial uses as a daily maximum limitation is. Chlorine is very toxic to aquatic life and short term exposures of chlorine may cause fish kills.

vi. **Fluoride**

The existing permit effluent limitation of 1.6 mg/l for fluoride was developed based on the Basin Plan chemical constituent incorporation of Title 22, Drinking Water Standards. Fluoride is not a priority pollutant. The discharge from the Simi Valley WQCP does not exhibit reasonable potential to exceed the USEPA Quality Criteria for Water 1976 (EPA 440/9-76-023) limit of 2,000 µg/L. Therefore, the accompanying Order will not contain a limit for fluoride.

vii. **Total Dissolved Solids, Sulfate, and Boron**

The limits for total dissolved solids, sulfate, and boron are based on Basin Plan Table 3-8 (page 3-12), for the Calleguas Creek watershed (above Potrero Road). TDS = 850 mg/L; Sulfate = 250 mg/L; and Boron = 1.0 mg/L. It is practicable to express these limits as monthly averages, since they are not expected to cause acute effects on beneficial uses.

Limits based upon the Basin Plan Objectives have been included in this Order because, based upon Best Professional Judgment, these constituents are always present in potable water which is the supply source of the wastewater entering the Treatment Plant. They may be present in concentrations which meet California drinking water standards but exceed the Basin Plan Objectives. Therefore, limitations are warranted to protect the beneficial uses of the receiving water.

However, once the Calleguas Creek Watershed Salts TMDL becomes effective, the TMDL interim WLA will replace the limits which were based upon the Basin Plan WQO Table 3-8. Once the TMDL compliance schedule expires, the interim limits will be replaced by the final WLA.

viii. **Chloride**

The water quality objective for chloride in the Basin Plan Table 3-8 (page 3-12), for Calleguas Creek Watershed (above Potrero Road) is 150 mg/L. However, the 150 mg/L effluent limit for chloride changed to 190 mg/L resulting from several resolutions.

On January 27, 1997, the Regional Board adopted Resolution No. 97-02, Amendment to the Water Quality Control Plan to incorporate a Policy for Addressing Levels of Chloride in Discharges of Wastewaters. It was approved by the State Board (SWRCB Resolution 97-94); approved by the Office of Administrative Law (OAL) on January 8, 1998; and served to revise the chloride water quality objective in Calleguas Creek and other surface waters.

On April 13, 1998, the Regional Board adopted Order No. 98-027, which temporarily amended Simi Valley WQCP's chloride daily maximum effluent limit to 190 mg/L. This interim limit expired on January 9, 2001.

On December 7, 2000, the Regional Board adopted Resolution No. 2000-22, to extend the Interim Chloride Limits for Discharges to Calleguas Creek until March 31, 2001.

On March 22, 2002, USEPA Region 9 established the Calleguas Creek Total Maximum Daily Load for chloride which used the 150 mg/L objective in the Basin Plan to establish a waste load allocation of 10,100 lbs/day for the Simi Valley WQCP during normal conditions, and a waste load allocation of 9,200 lbs/day for the Simi Valley WQCP during drought conditions.

On August 14, 2002 the City of Simi Valley (Simi Valley WQCP), Thousand Oaks (Hill Canyon WWTP), Camarillo Sanitary District (Camarillo WRP), Camrosa Sanitation District (Camrosa WRP), Ventura County Water Works District No. 1 (Moorpark facility) and the LA Regional Board entered into a "Stipulation for Order Issuing Stay, with Conditions," which stayed the chloride final effluent limitation in NPDES Order No. 96-043. The State Board adopted WQO 2002-0017, which approved the August 14, 2002 stipulation.

On June 5, 2003, the NPDES permits for the City of Simi Valley (Simi Valley WQCP), Thousand Oaks (Hill Canyon WWTP), Camarillo Sanitary District (Camarillo WRP) were renewed, thereby rescinding the 1996 NPDES Orders, except for enforcement purposes. The Dischargers petitioned the revised NPDES Orders to the State Board, requested an extension of the chloride stay, and asked that the petitions be held in abeyance.

On October 10, 2003 the City of Simi Valley (Simi Valley WQCP), Thousand Oaks (Hill Canyon WWTP), Camarillo Sanitary District (Camarillo WRP), and the LA Regional Board entered into a "Stipulation for Further Order Issuing Stay, with Conditions," which stayed the chloride final effluent limitation in NPDES Order No. R4-2003-0081. The State Board adopted WQO 2003-

0019, which approved the October 10, 2003 stipulation and held the petitions in abeyance for three years (until November 19, 2006).

On September 28, 2006, the State Board granted an extension of the abeyance until July 15, 2008, when the petition will be dismissed without prejudice.

ix. **Iron**

The previous Order had an effluent limitation of 300 mg/l for iron, which was based on the USEPA document, *Quality Criteria for Water 1986* [EPA 440/5-86-001, May 1, 1986], also referred to as the *Gold Book*, for the protection of GWR beneficial use. 300 µg/L was also the secondary MCL for iron. However , the limit was removed because there was no reasonable potential for the discharge to cause or contribute to an exceedance.

x. **Methylene Blue Activated Substances (MBAS)**

The MBAS procedure tests for the presence of anionic surfactants (detergents) in surface and ground waters. Surfactants disturb the water surface tension, which affects insects and can affect gills in aquatic life. The MBAS can also impart an unpleasant soapy taste to water, as well as cause scum and foaming in waters, which impact the aesthetic quality of both surface and ground waters.
Given the nature of the facility (a POTW) which accepts domestic washwater into the sewer system and treatment plant, and the characteristics of the wastes discharged, the discharge has reasonable potential to exceed both the numeric MBAS water quality objective (WQO) and the narrative WQO for prohibition of floating material such as foams and scums. Therefore an effluent limitation is required.

The discharge from the Simi Valley WQCP may have reasonable potential to contribute to an exceedance of the 0.5 mg/L WQO. The 0.5 mg/L concentration (which has been determined to be protective of beneficial uses and the aesthetic quality of waters) is based on the Department of Public Health's (formerly known as the Department of Health Services) secondary drinking water standard, and on the Basin Plan WQO (p.3-11) which reads, "Waters shall not have MBAS concentrations greater than 0.5 mg/L in waters designated MUN." While the wastewater from this POTW is not directly discharged into a MUN designated surface water body, it will percolate into unlined reaches of Arroyo Simi and Calleguas Creek [via ground water recharge designated beneficial use (GWR)] to ground water designated for MUN beneficial use. In addition, the Basin Plan states that "Ground water shall not contain taste or odor-producing substances in concentrations that cause nuisance or adversely affect beneficial uses." Therefore, the secondary MCL should be the MBAS limit for this discharge to protect ground

water recharge and the MUN use of the underlying ground water, while also protecting surface waters from exhibiting scum or foaming.
Since the Basin Plan objective is based on a secondary drinking water standard, it is practicable to have a monthly average limitation in the permit, rather than a daily maximum.

xi. **Total Inorganic Nitrogen (NO_2 + NO_3 as N)**

Total inorganic nitrogen is the sum of Nitrate-nitrogen and Nitrite-nitrogen. High nitrate levels in drinking water can cause health problems in humans. Infants are particularly sensitive and can develop methemoglobinemia (blue-baby syndrome). Nitrogen is also considered a nutrient. Excessive amounts of nutrients can lead to other water quality impairments.

(a). **Algae**.
Excessive growth of algae and/or other aquatic plants can degrade water quality. Algal blooms sometimes occur naturally, but they are often the result of excess nutrients (i.e., nitrogen, phosphorus) from waste discharges or nonpoint sources. These algal blooms can lead to problems with tastes, odors, color, and increased turbidity and can depress the dissolved oxygen content of the water, leading to fish kills. Floating algal scum and algal mats are also an aesthetically unpleasant nuisance.

The WQO for biostimulatory substances are based on Basin Plan (page 3-8) narrative, "Waters shall not contain biostimulatory substances in concentrations that promote aquatic growth to the extent that such growth causes nuisance or adversely affects beneficial uses," and other relevant information to arrive at a mass based-limit intended to be protective of the beneficial uses, pursuant to 40 C.F.R. Part 122.44(d). Total inorganic nitrogen will be the indicator parameter intended to control algae, pursuant to 40 C.F.R. Part 122.44(d)(1)(vi)(C).

(b). **Concentration-based limit**. Total inorganic nitrogen (NO_2–N + NO_3–N) effluent limitation of 10 mg/L is based on Basin Plan Table 3-8 (page 3-12), for Calleguas Creek Watershed above Potrero Road. However, the Nitrogen Compound TMDL for this Watershed has been in effect since July 16, 2003. Therefore, total inorganic nitrogen effluent limitation of 9 mg/L will apply in this permit.

(c). **Mass-based limit.** Since the TMDL does not specify any mass-based WLA for nitrate plus nitrite as nitrogen, mass bases limits are not included for NO_2-N + NO_3-N.

xii. **Nitrite as Nitrogen and Nitrate as Nitrogen**

The effluent limit for nitrite as nitrogen (NO_2-N) of 0.9 mg/L is based on the Calleguas Creek Watershed Nutrient TMDL Waste Load Allocation which was assigned to the Simi Valley WQCP. The effluent limit for nitrate as nitrogen (NO_3-N) of 9 mg/L is based on the Calleguas Creek Watershed Nutrient TMDL Waste Load Allocation which was assigned to the Simi Valley WQCP. Since the TMDL does not specify any mass-based WLA for nitrate as nitrogen or nitrite as nitrogen, mass bases limits are not included for either of the two constituents.

xiii. **Total ammonia**

Ammonia is a pollutant routinely found in the wastewater effluent of Publicly Owned Treatment Works (POTWs), in landfill-leachate, as well as in run-off from agricultural fields where commercial fertilizers and animal manure are applied. Ammonia exists in two forms – un-ionized ammonia (NH_3) and the ammonium ion (NH_4^+). They are both toxic, but the neutral, un-ionized ammonia species (NH_3) is much more toxic, because it is able to diffuse across the epithelial membranes of aquatic organisms much more readily than the charged ammonium ion. The form of ammonia is primarily a function of pH, but it is also affected by temperature and other factors. Additional impacts can also occur as the oxidation of ammonia lowers the dissolved oxygen content of the water, further stressing aquatic organisms. Oxidation of ammonia to nitrate may lead to groundwater impacts in areas of recharge. There is groundwater recharge in these reaches. Ammonia also combines with chlorine (often both are present in POTW treated effluent discharges) to form chloramines – persistent toxic compounds that extend the effects of ammonia and chlorine downstream.

On October 24, 2002, the Regional Board adopted Resolution No. 02-017, *Amendment to the Water Quality Control Plant for the Los Angeles Region to Include a TMDL for Nitrogen Compounds and Related Effects in Calleguas Creek*. This Resolution was approved by the State Water Resources Control Board, Office of Administrative Law, and USEPA on March 19, 2003, June 5, 2003, and June 20, 2003, respectively. Calleguas Creek Nitrogen TMDL has ammonia nitrogen waste load allocations of 3.3 mg/L and 2.4 mg/L as maximum daily and average monthly effluent limitation, respectively. These waste load allocations will apply as end-of-pipe effluent limitations for Simi Valley WQCP.

xiv. **Coliform**

Total and fecal coliform bacteria are used to indicate the likelihood of pathogenic bacteria in surface waters. Given the nature of the facility, a wastewater treatment plant, pathogens are likely to be present in the effluent in cases where the disinfection process is not operating adequately. As such, the permit contains the following:

i. Effluent Limitations:

- The 7 day median number of coliform organisms at some point in the treatment process must not exceed a Most Probable Number (MPN) or Colony Forming Unit (CFU) of 2.2 per 100 milliliters, and

- The number of coliform organisms must not exceed an MPN or CFU of 23 per 100 milliliters in more than one sample within any 30-day period.

These disinfection-based effluent limitations for coliform are for human health protection and are consistent with requirements established by the Department of Public Health (formerly known as the Department of Health Services). These limits for coliform must be met at the point of the treatment train immediately following disinfection, as a measure of the effectiveness of the disinfection process.

ii. Receiving Water Limitation

- Geometric Mean Limits
  - E.coli density shall not exceed 126/100 mL.
  - Fecal coliform density shall not exceed 200/100 mL.

- Single Sample Limits
  - E.coli density shall not exceed 235/100 mL.
  - Fecal coliform density shall not exceed 400/100 mL.

These receiving water limitations are based on Resolution No. 01-018, Amendment to the Water Quality Control Plan for the Los Angeles Region to Update the Bacteria Objectives for Water Bodies Designated for Water Contact Recreation, adopted by the Regional Water Board on October 25, 2001. The Resolution was approved by State Water Board, OAL, and USEPA, on July 18, 2002, September 19, 2002, and September 25, 2002, respectively.

xv. **Temperature**

USEPA document, *Quality Criteria for Water 1986* [EPA 440/5-86-001, May 1, 1986], also referred to as the *Gold Book*, discusses temperature and its effects on beneficial uses, such as recreation and aquatic life.

- The Federal Water Pollution Control Administration in 1967 called temperature "a catalyst, a depressant, an activator, a restrictor, a

stimulator, a controller, a killer, and one of the most important water quality characteristics to life in water." The suitability of water for total body immersion is greatly affected by temperature. Depending on the amount of activity by the swimmer, comfortable temperatures range from 20°C to 30°C (68 °F to 86 °F).

- Temperature also affects the self-purification phenomenon in water bodies and therefore the aesthetic and sanitary qualities that exist. Increased temperatures accelerate the biodegradation of organic material both in the overlying water and in bottom deposits which makes increased demands on the dissolved oxygen resources of a given system. The typical situation is exacerbated by the fact that oxygen becomes less soluble as water temperature increases. Thus, greater demands are exerted on an increasingly scarce resource which may lead to total oxygen depletion and obnoxious septic conditions. Increased temperature may increase the odor of water because of the increased volatility of odor-causing compounds. Odor problems associated with plankton may also be aggravated.

- Temperature changes in water bodies can alter the existing aquatic community. Coutant (1972) has reviewed the effects of temperature on aquatic life reproduction and development. Reproductive elements are noted as perhaps the most thermally restricted of all life phases, assuming other factors are at or near optimum levels. Natural short-term temperature fluctuations appear to cause reduced reproduction of fish and invertebrates.

The Basin Plan lists temperature requirements for the receiving waters. Based on the requirements of the Basin Plan and a white paper developed by Regional Water Board staff entitled *Temperature and Dissolved Oxygen Impacts on Biota in Tidal Estuaries and Enclosed Bays in the Los Angeles Region*, a maximum effluent temperature limitation of 86 °F is included in the Order. The white paper evaluated the optimum temperatures for steelhead, topsmelt, ghost shrimp, brown rock crab, jackknife clam, and blue mussel. The new temperature effluent limitation is reflective of new information available that indicates that the 100°F temperature which was formerly used in permits was not protective of aquatic organisms. A survey was completed for several kinds of fish and the 86°F temperature was found to be protective. It is impracticable to use a 7-day average or a 30-day average limitation for temperature, because it is not as protective as of beneficial uses as a daily maximum limitation is. A daily maximum limit is necessary to protect aquatic life and is consistent with the fishable/swimmable goals of the CWA.

xvi. **Turbidity**

Turbidity is an expression of the optical property that causes light to be scattered in water due to particulate matter such as clay, silt, organic matter, and microscopic organisms. Turbidity can result in a variety of water quality impairments. The effluent limitation for turbidity which reads, "For the protection of the water contact recreation beneficial use, the wastes discharged to water courses shall have received adequate treatment, so that the turbidity of the wastewater does not exceed: (a) a daily average of 2 Nephelometric turbidity units (NTU); (b) 5 NTU more than 5 percent of the time (72 minutes) during any 24 hour period; and (c) 10 NTU at any time" is based on the Basin Plan (page 3-17) and section 60301.320 of Title 22, Chapter 3, "Filtered Wastewater" of the California Code of Regulations.

xvii. **Radioactivity**

Radioactive substances are generally present in natural waters in extremely low concentrations. Mining or industrial activities increase the amount of radioactive substances in waters to levels that are harmful to aquatic life, wildlife, or humans. Section 301 (f) of the CWA contains the following statement with respect to effluent limitations for radioactive substances: "Notwithstanding any other provisions of this Act it shall be unlawful to discharge any radiological, chemical, or biological warfare agent, any high-level radioactive waste, or any medical waste, into the navigable waters." Chapter 5.5 of the California Water Code contains a similar prohibition under section 13375, which reads as follows: "The discharge of any radiological, chemical, or biological warfare agent into the waters of the state is hereby prohibited." However, rather than give a hard and fast absolute prohibition on radioactive substances, Regional Water Board staff have set the following effluent limit for radioactivity: "Radioactivity of the wastes discharged shall not exceed the limits specified in Title 22, Chapter 15, Article 5, section 64443, of the California Code of Regulations, or subsequent revisions." The limit is based on the Basin Plan incorporation of Title 22, *Drinking Water Standards,* by reference, to protect beneficial uses. Therefore, the accompanying Order will retain the limit for radioactivity.

c. **CTR and SIP**

The California Toxic Rule (CTR) and State Implementation Policy (SIP) specify numeric objectives for toxic substances and the procedures whereby these objectives are to be implemented. The procedures include those used to conduct reasonable potential analysis to determine the need for effluent limitations for priority and non-priority pollutants.

3. Determining the Need for WQBELs

The Regional Water Board developed WQBELs for ammonia-nitrogen, nitrite-nitrogen, nitrate-nitrogen, nitrite plus nitrite as nitrogen, chloride, TDS, sulfate,

copper, nickel, mercury, chlordane, 4,4'-DDD, 4,4'-DDE, 4,4'-DDT, dieldrin, PCBs, toxaphene, chlorpyrifos, diazinon, and toxicity based upon Total Maximum Daily Loads (TMDLs). The effluent limitations for these pollutants were established regardless of whether or not there is reasonable potential for the pollutants to be present in the discharge at levels that would cause or contribute to a violation of water quality standards. The Regional Water Board developed water quality-based effluent limitations for these pollutants pursuant to Part 122.44(d)(1)(vii), which does not require or contemplate a reasonable potential analysis. Similarly, the SIP at Section 1.3 recognizes that reasonable potential analysis is not appropriate if a TMDL has been developed.

In accordance with Section 1.3 of the SIP, the Regional Water Board conducted a reasonable potential analysis for each priority pollutant with an applicable criterion or objective to determine if a WQBEL is required in the permit. The Regional Water Board analyzed effluent data to determine if a pollutant in a discharge has a reasonable potential to cause or contribute to an excursion above a state water quality standard. For all parameters that demonstrate reasonable potential, numeric WQBELs are required. The RPA considers water quality criteria from the CTR and NTR, and when applicable, water quality objectives specified in the Basin Plan. To conduct the RPA, the Regional Water Board staff identified the maximum effluent concentration (MEC) and maximum background concentration in the receiving water for each constituent, based on data provided by the Discharger. The monitoring data cover the period from August 2003 to December 2007.

Section 1.3 of the SIP provides the procedures for determining reasonable potential to exceed applicable water quality criteria and objectives. The SIP specifies three triggers to complete a RPA:

<u>Trigger 1</u> – If the MEC is greater than or equal to the CTR water quality criteria or applicable objective (C), a limitation is needed.

<u>Trigger 2</u> – If background water quality (B) > C and the pollutant is detected in the effluent, a limitation is needed.

<u>Trigger 3</u> – If other related information such as CWA 303(d) listing for a pollutant, discharge type, compliance history, then best professional judgment is used to determine that a limit is needed.

Sufficient effluent and ambient data are needed to conduct a complete RPA. If data are not sufficient, the Discharger will be required to gather the appropriate data for the Regional Water Board to conduct the RPA. Upon review of the data, and if the Regional Water Board determines that WQBELs are needed to protect the beneficial uses, the permit will be reopened for appropriate modification.

The RPA was performed for the priority pollutants regulated in the CTR for which data are available. The list of priority pollutants that show reasonable potential are

tabulated below where the column heading "RPA Result Need Limitation?" is marked "Yes". The following Table summarizes results of the RPA.

Table 5. Summary of Reasonable Potential Analysis

CTR No.	Constituent	Applicable Water Quality Criteria (C) µg/L	Max Effluent Conc. (MEC) µg/L	Maximum Detected Receiving Water Conc. (B) µg/L	RPA Result - Need Limitation ?	Reason
1	Antimony	4300	0.6	19	No	C>B, C>MEC
2	Arsenic	150	9	13	No	C>B, C>MEC
3	Beryllium	Narrative	ND	ND	No	C>B, C>MEC
4	Cadmium	6.2	3.1	5	No	C>B, C>MEC
5a	Chromium III	549.5	---	---	No	C>B, C>MEC
5b	Chromium VI	11	0.1	ND	No	C>B, C>MEC
6	Copper	29	13	6.6	Yes	TMDL
7	Lead	10.8	6	6.7	No	C>B, C>MEC
8	Mercury	0.051	1.7	0.06	Yes	TMDL, Tier 1, and Tier 2
9	Nickel	166.6	10	10	Yes	TMDL
10	Selenium	5	3.4	24.6	Yes	Tier 2
11	Silver	36.8	10	4	No	C>B, C>MEC
12	Thallium	6.3	ND	30	No	C>MEC
13	Zinc	376.1	120	60	No	TMDL; but no assigned WLA
14	Cyanide	5.2	11	7.7	Yes	Tier 1 & Tier 2
15	Asbestos	$7x10^{6}$ fibers/L	No sample	No sample	No	N/A
16	2,3,7,8-TCDD (Dioxin)	$1.4x10^{-08}$	ND	ND	No	C>B, C>MEC
17	Acrolein	780	ND	ND	No	C>B, C>MEC
18	Acrylonitrile	0.66	ND	ND	No	C>B, C>MEC
19	Benzene	71	ND	ND	No	C>B, C>MEC
20	Bromoform	360	1.5	2	No	C>B, C>MEC
21	Carbon Tetrachloride	4.4	ND	ND	No	C>B, C>MEC
22	Chlorobenzene	21,000	ND	ND	No	C>B, C>MEC
23	Dibromochloromethane	34	16	6.3	No	C>B, C>MEC
24	Chloroethane	No criteria	ND	ND	No	No criteria
25	2-chloroethyl vinyl ether	No criteria	ND	ND	No	No criteria
26	Chloroform	No criteria	46	ND	No	No criteria
27	Dichlorobromomethane	46	35.1	13	No	C>B, C>MEC
28	1,1-dichloroethane	No criteria	ND	ND	No	No criteria
29	1,2-dichloroethane	99	ND	ND	No	C>B, C>MEC
30	1,1-dichloroethylene	3.2	ND	ND	No	C>B, C>MEC

CTR No.	Constituent	Applicable Water Quality Criteria (C) µg/L	Max Effluent Conc. (MEC) µg/L	Maximum Detected Receiving Water Conc. (B) µg/L	RPA Result - Need Limitation ?	Reason
31	1,2-dichloropropane	39	ND	ND	No	C>B, C>MEC
32	1,3-dichloropropylene	1,700	ND	ND	No	C>B, C>MEC
33	Ethylbenzene	29,000	ND	ND	No	C>B, C>MEC
34	Methyl bromide	4,000	0.5	ND	No	C>B, C>MEC
35	Methyl chloride	No criteria	ND	ND	No	No criteria
36	Methylene chloride	1,600	ND	ND	No	C>B, C>MEC
37	1,1,2,2-tetrachloroethane	11	ND	ND	No	C>B, C>MEC
38	Tetrachloroethylene	8.85	0.5	ND	No	C>B, C>MEC
39	Toluene	200,000	ND	ND	No	C>B, C>MEC
40	Trans 1,2-Dichloroethylene	140,000	ND	ND	No	C>B, C>MEC
41	1,1,1-Trichloroethane	No criteria	ND	ND	No	C>B, C>MEC
42	1,1,2-Trichloroethane	42	ND	ND	No	C>B, C>MEC
43	Trichloroethylene	81	ND	ND	No	C>B, C>MEC
44	Vinyl Chloride	525	ND	ND	No	C>B, C>MEC
45	2-chlorophenol	400	<5	<5/<5	No	C>B, C>MEC
46	2,4-dichlorophenol	790	<5	<5<5	No	C>B, C>MEC
47	2,4-dimethylphenol	2,300	<2	<2/<2	No	C>B, C>MEC
48	4,6-dinitro-o-cresol(aka 2-methyl-4,6-Dinitrophenol)	765	<5	<5/<5	No	C>B, C>MEC
49	2,4-dinitrophenol	14,000	<5	<5/<5	No	C>B, C>MEC
50	2-nitrophenol	No criteria	ND	ND	No	No criteria
51	4-nitrophenol	No criteria	ND	ND	No	No criteria
52	3-Methyl-4-Chlorophenol (aka P-chloro-m-cresol)	No criteria	ND	ND	No	No criteria
53	Pentachlorophenol	8.2	ND	ND	No	C>B, C>MEC
54	Phenol	4,600,000	ND	ND	No	C>B, C>MEC
55	2,4,6-trichlorophenol	6.5	ND	ND	No	C>B, C>MEC
56	Acenaphthene	2,700	ND	ND	No	C>B, C>MEC
57	Acenaphthylene	No criteria	ND	ND	No	No criteria
58	Anthracene	110,000	ND	ND	No	C>B, C>MEC
59	Benzidine	0.00054	ND	ND	No	C>B, C>MEC
60	Benzo(a)Anthracene	0.049	ND	ND	No	C>B, C>MEC
61	Benzo(a)Pyrene	0.049	ND	ND	No	C>B, C>MEC
62	Benzo(b)Fluoranthene	0.049	ND	ND	No	C>B, C>MEC
63	Benzo(ghi)Perylene	No criteria	ND	ND	No	No criteria
64	Benzo(k)Fluoranthene	0.049	ND	ND	No	C>B, C>MEC
65	Bis(2-Chloroethoxy)	No criteria	ND	ND	No	No criteria

CTR No.	Constituent	Applicable Water Quality Criteria (C) µg/L	Max Effluent Conc. (MEC) µg/L	Maximum Detected Receiving Water Conc. (B) µg/L	RPA Result - Need Limitation ?	Reason
	methane					
66	Bis(2-Chloroethyl)Ether	1.4	ND	ND	No	C>B, C>MEC
67	Bis(2-Chloroisopropyl) Ether	170,000	ND	ND	No	C>B, C>MEC
68	Bis(2-Ethylhexyl)Phthalate	5.9	ND	ND	No	C>B, C>MEC
69	4-Bromophenyl Phenyl Ether	No criteria	ND	ND	No	No criteria
70	Butylbenzyl Phthalate	5,200	ND	ND	No	C>B, C>MEC
71	2-Chloronaphthalene	4,300	ND	ND	No	C>B, C>MEC
72	4-Chlorophenyl Phenyl Ether	No criteria	ND	ND	No	No criteria
73	Chrysene	0.049	ND	ND	No	C>B, C>MEC
74	Dibenzo(a,h) Anthracene	0.049	ND	ND	No	C>B, C>MEC
75	1,2-Dichlorobenzene	17,000	ND	ND	No	C>B, C>MEC
76	1,3-Dichlorobenzene	2,600	ND	ND	No	C>B, C>MEC
77	1,4-Dichlorobenzene	2,600	ND	ND	No	C>B, C>MEC
78	3-3'-Dichlorobenzidine	0.077	ND	ND	No	C>B, C>MEC
79	Diethyl Phthalate	120,000	ND	ND	No	C>B, C>MEC
80	Dimethyl Phthalate	2,900,000	ND	ND	No	C>B, C>MEC
81	Di-n-Butyl Phthalate	12,000	ND	ND	No	C>B, C>MEC
82	2-4-Dinitrotoluene	9.1	ND	ND	No	C>B, C>MEC
83	2-6-Dinitrotoluene	No criteria	ND	ND	No	No criteria
84	Di-n-Octyl Phthalate	No criteria	ND	ND	No	No criteria
85	1,2-Diphenylhydrazine	0.54	ND	ND	No	C>B, C>MEC
86	Fluoranthene	370	ND	ND	No	C>B, C>MEC
87	Fluorene	14,000	ND	ND	No	C>B, C>MEC
88	Hexachlorobenzene	50	ND	ND	No	C>B, C>MEC
89	Hexachlorobutadiene	50	ND	ND	No	C>B, C>MEC
90	Hexachlorocyclopentadiene	17,000	ND	ND	No	C>B, C>MEC
91	Hexachloroethane	8.9	ND	ND	No	C>B, C>MEC
92	Indeno(1,2,3-cd)Pyrene	0.049	ND	ND	No	C>B, C>MEC
93	Isophorone	600	ND	ND	No	C>B, C>MEC
94	Naphthalene	No criteria	ND	ND	No	No criteria
95	Nitrobenzene	1,900	ND	ND	No	C>B, C>MEC
96	N-Nitrosodimethylamine	8.1	ND	ND	No	C>B, C>MEC

CTR No.	Constituent	Applicable Water Quality Criteria (C) µg/L	Max Effluent Conc. (MEC) µg/L	Maximum Detected Receiving Water Conc. (B) µg/L	RPA Result - Need Limitation ?	Reason
97	N-Nitrosodi-n-Propylamine	1.4	ND	ND	No	C>B, C>MEC
98	N-Nitrosodiphenylamine	16	ND	ND	No	C>B, C>MEC
99	Phenanthrene	No criteria	ND	ND	No	No criteria
100	Pyrene	11,000	ND	ND	No	C>B, C>MEC
101	1,2,4-Trichlorobenzene	No criteria	ND	ND	No	No criteria
102	Aldrin	0.00014	ND	ND	No	C>B, C>MEC
103	Alpha-BHC	0.013	ND	0.016	No	C>MEC
104	Beta-BHC	0.046	ND	ND	No	C>B, C>MEC
105	Gamma-BHC (aka Lindane)	0.063	ND	0.03	No	C>B, C>MEC
106	delta-BHC	No criteria	ND	ND	No	No criteria
107	Chlordane	0.00059	ND	ND	Yes	TMDL
108	4,4'-DDT	0.00059	ND	ND	Yes	TMDL
109	4,4'-DDE	0.00059	<0.01	0.03	Yes	TMDL
110	4,4'-DDD	0.00084	ND	<0.01	Yes	TMDL
111	Dieldrin	0.00014	ND	<0.01	Yes	TMDL
112	Alpha-Endosulfan	0.056	ND	<0.01	No	C>B, C>MEC
113	Beta-Endosulfan	0.056	ND	<0.01	No	C>B, C>MEC
114	Endosulfan Sulfate	240	ND	<0.01	No	C>B, C>MEC
115	Endrin	0.036	<0.1	ND	No	C>B, C>MEC
116	Endrin Aldehyde	0.81	ND	ND	No	C>B, C>MEC
117	Heptachlor	0.00021	ND	ND	No	C>B, C>MEC
118	Heptachlor Epoxide	0.00011	<0.05	ND	No	C>B, C>MEC
119	PCB 1016	0.00017	<1	<0.1	Yes	TMDL
120	PCB 1221	0.00017	<1	<0.1	Yes	TMDL
121	PCB 1232	0.00017	<1	<0.1	Yes	TMDL
122	PCB 1242	0.00017	<1	<0.1	Yes	TMDL
123	PCB 1248	0.00017	<1	<0.1	Yes	TMDL
124	PCB 1254	0.00017	<1	<0.05	Yes	TMDL
125	PCB 1260	0.00017	<1	<0.1	Yes	TMDL
126	Toxaphene	0.0002	<1	<0.5	Yes	TMDL

4. WQBEL Calculations

~~i.~~a. **Calculation Options**. Once RPA has been conducted using either the TSD or the SIP methodologies, WQBELs are calculated. Alternative procedures for calculating WQBELs include:

i. Use WLA from applicable TMDL
ii. Use a steady-state model to derive Maximum Daily Effluent Limits and Average Monthly Effluent Limits.
iii. Where sufficient data exist, use a dynamic model which has been approved by the State Water Board.

~~ii.~~b. **Calleguas Creek Watershed Metals TMDL**. Concentration-based and mass-based WLAs are established for copper, nickel, and selenium in total recoverable forms, and are applied to POTWs during both wet and dry weather. Mass-based WLAs are developed for mercury for POTWs. Zinc allocations are not set because current information indicate that numeric targets for zinc are attained. The TMDL implementation plan includes a task to provide State Board data to support delisting of zinc. Waste load allocations for selenium are not set for POTWs because POTWs do not discharge to reaches listed for selenium. However, for Simi Valley WQCP's case, selenium effluent limitations will be prescribed because it shows reasonable potential (Tier 2, B>C and was detected at the effluent).

~~iii.~~c. **SIP Calculation Procedure**. Section 1.4 of the SIP requires the step-by-step procedure to "adjust" or convert CTR numeric criteria into Average Monthly Effluent Limitations (AMELs) and Maximum Daily Effluent Limitations (MDELs), for toxics.

Step 3 of Section 1.4 of the SIP (page 8) lists the statistical equations that adjust CTR criteria for effluent variability.

Step 5 of Section 1.4 of the SIP (page 10) lists the statistical equations that adjust CTR criteria for averaging periods and exceedance frequencies of the criteria/objectives. This section also reads, "For this method only, maximum daily effluent limitations shall be used for publicly-owned treatment works (POTWs) in place of average weekly limitations.

Sample calculation for Cyanide:

Step 1: Identify applicable water quality criteria.

From California Toxics Rule (CTR), we can obtain the Criterion Maximum Concentration (CMC) and the Criterion Continuous Concentration (CCC).

Freshwater Aquatic Life Criteria:

CMC = 22 µg/L (CTR page 31712, column B1) and
CCC = 5.2 µg/L (CTR page 31712, column B2); and
Human Health Criteria for Organisms only = 220,000 µg/L (CTR page 31712, column D2).

Step 2: Calculate effluent concentration allowance (ECA)

ECA = Criteria in CTR, since no dilution is allowed.

Step 3: Determine long-term average (LTA) discharge condition

i. Calculate CV:

CV = Standard Deviation/Mean
= 0.6

Find the ECA Multipliers from SIP Table 1 (page 7), or by calculating them using equations on SIP page 6. When CV = 0.6, then:

ECA Multiplier acute = 0.321 and
ECA Multiplier chronic = 0.527

LTA acute = ECA acute x ECA Multiplier acute
= 22 µg/L x 0.321 = 7.062 µg/L

LTA chronic = ECA chronic x ECA Multiplier chronic
= 5.2 µg/L x 0.527 = 2.740 µg/L

Step 4: Select the lowest LTA

In this case, LTA chronic < LTA acute, therefore lowest LTA = 2.740 µg/L

Step 5: Calculate the Average Monthly Effluent Limitation (AMEL) & Maximum Daily Effluent Limitation (MDEL) for AQUATIC LIFE

i. Find the multipliers. You need to know CV and n (frequency of sample collection per month). If effluent samples are collected 4 times a month or less, then n = 4. CV was determined to be 0.6 in a previous step.

AMEL Multiplier = 1.55
MDEL Multiplier = 3.11

ii. AMEL aquatic life = lowest LTA (from Step 4) x AMEL Multiplier
= 2.74 µg/L x 1.55 = 4.247 µg/L

iii. MDEL aquatic life = lowest LTA (from Step 4) x MDEL Multiplier
= 2.74 µg/L x 3.11 = 8.521 µg/L

Step 6: Find the Average Monthly Effluent Limitation (AMEL) & Maximum Daily Effluent Limitation (MDEL) for HUMAN HEALTH

i. Find factors. Given CV = 0.6 and n = 4.

For AMEL human health limit, there is no factor.
The MDEL/AMEL human health factor = 2.01

ii. AMEL human health = ECA = 220,000 µg/L

iii. MDEL human health = ECA x MDEL/AMEL factor
= 220,000 µg/L x 2.01 = 442,200 µg/L

Step 7: Compare the AMELs for Aquatic life and Human health and select the lowest. Compare the MDELs for Aquatic life and Human health and select the lowest

~~a.~~i. Lowest AMEL = 4.2 µg/L (Based on Aquatic life protection)

~~b.~~ii. Lowest MDEL = 8.5 µg/L (Based on Aquatic life protection)

~~iv.~~d. **Impracticability Analysis**

Federal NPDES regulations contained in 40 C.F.R. 122.45 for continuous dischargers, states that all permit limitations, standards, and prohibitions, including those to achieve water quality standards, shall unless impracticable be stated as maximum daily and average monthly discharge limitations for all dischargers other than POTWs.

As stated by USEPA in its long standing guidance for developing water quality-based effluent limitations (WQBELs), average alone limitations are not practical for limiting acute, chronic, and human health toxic affects.

For example, a POTW sampling for a toxicant to evaluate compliance with a 7-day average limitation could fully comply with this average limit, but still be discharging toxic effluent on one, two, three, or up to four of these seven days and not be meeting 1-hour average acute criteria or 4-day average chronic criteria. For these reason, USEPA recommends daily maximum and 30-day average limits for regulating toxics in all NPDES discharges. For the purposes of protecting the acute effects of discharges containing toxicants (CTR human health for the ingestion of fish), daily maximum limitations have been established in this NPDES permit for selenium as it is bioaccumulative.

Although trace amounts of selenium are considered an essential dietary element for most organisms, at higher concentrations it can be more toxic than arsenic or mercury (Sorensen 1991). The chemical properties of selenium resemble sulfur, and uptake occurs readily in protein synthesis; if allowed to cycle within the food chain, selenium tends to bioaccumulate and can adversely affect higher order sensitive wildlife (Ohlendorf 2003, Martinez 1994, Rusk 1991, Sorensen 1991).

Studies in the upper Colorado River Basin have documented selenium-induced reproductive impairments in razorback sucker and bonytail (Hamilton 1994, Buhl and Hamilton 1995, Waddell and May 1995). Selenium is implicated with toxic effects to other aquatic organisms and biota (such as fish-eating birds) utilizing aquatic organisms as prey, and has been linked to deformities, reproductive impairments, and mortality (Ohlendorf 2003). Studies in the lower Colorado River Basin have documented potentially toxic levels of selenium in fish-eating birds (Radtke et al. 1988; Rusk 1991; Martinez 1994; Andrews et al. 1997).

For these reasons, a 7-day average alone would not protect one, two, three, or fours days of discharging selenium in excess of the acute and chronic criteria. Fish exposed to selenium will pass the bioaccumulated constituent onto the human consumer.

The following are the references used in the preceding discussion:

Sorensen, E.M.B. 1991. Metal Poisoning in Fish. CRC Press, Boca Raton, FL. 374 pp

Ohlendorf, H.M. 2003. Ecotoxicology of selenium. Pages 465-500 In Hoffman, D.J., Rattner, B.A., Burton, Jr., G.A., and Cairns, Jr., J. (eds.). Handbook of Ecotoxicology. Lewis Publishers, Boca Raton, Florida.

Martinez, C.T. 1994. Selenium levels in selected species of aquatic birds on Imperial National Wildlife Refuge. M.S. Thesis. University of Arizona, Tucson. 74 pp.

McCaulou, T. 1993. Corbicula fluminea as a bioindicator on the lower Colorado River. M.S. Thesis. University of Arizona, Tucson. 69 pp.

Rusk, M.K. 1991. Selenium risk to Yuma clapper rails and other marsh birds of the Lower Colorado River. M.S. Thesis. University of Arizona, Tucson. 75 pp.

Hamilton, S.J. 1994. Hazard assessment of inorganics to three endangered fish in the Green River, Utah. Ecotoxicology and Environmental Safety 30:134-142.

Buhl, K.J. and S.J. Hamilton. 1995. Irrigation drainwater may be harmful to endangered fish in the Green River of Utah. National Biological Service Research Informational Bulletin No. 8. 4 pp.

Waddell, B. and T. May. 1995. Selenium concentrations in the razorback sucker (Xyrauchen texanus): Substitution of non-lethal muscle plugs for muscle tissue in contaminant assessment. Archives of Environmental Contamination and Toxicology 28:321-326.

Radtke, D.B., W.G. Kepner, and R.J. Effertz. 1988. Reconnaissance investigation of water quality, bottom sediment, and biota associated with irrigation drainage in the Lower Colorado River Valley, Arizona, California, and Nevada. U.S. Geological Survey, Water-Resources Investigations Report 88-4002, Tucson, Arizona. 77 pp.

Andrews, B.J., K.A. King, and D.L. Baker. 1997. Environmental contaminants in fish and wildlife of Havasu National Wildlife Refuge, Arizona. U.S. Fish and Wildlife Service, Arizona Ecological Services Field Office Report, Phoenix. 65 pp.

~~v.~~e. **Mass based limits**. 40 C.F.R. part 122.45(f)(1) requires that except under certain conditions, all permit limits, standards, or prohibitions be expressed in terms of mass units. 40 C.F.R. part 122.45(f)(2) allows the permit writer, at the writer's discretion, to express limits in additional units (e.g., concentration units). The regulations mandate that, where limits are expressed in more than one unit, the permittee must comply with both.

Generally, mass-based limits ensure that proper treatment, and not dilution, is employed to comply with the final effluent concentration limits. Concentration-based effluent limits, on the other hand, discourage the reduction in treatment efficiency during low-flow periods and require proper operation of the treatment units at all times. In the absence of concentration-based effluent limits, a permittee would be able to increase its effluent concentration (i.e., reduce its level of treatment) during low-flow periods and still meet its mass-based limits. To account for this, this permit includes mass and concentration limits for some constituents.

Summary of Water Quality-based Effluent Limitations
Discharge Points 001 and 002

Table 6. Summary of Water Quality-based Effluent Limitations

Parameter	Units	Effluent Limitations				
		Average Monthly	Average Weekly	Maximum Daily	Instantaneous Minimum	Instantaneous Maximum
Copper	µg/L	30.5 [1]	--	31[1]		
	lbs/day	--	--	--		
Nickel	µg/L	169[1]	--	960[1]		
	lbs/day	--	--	--		
Mercury	µg/L	--	--	--		
	lbs/month	0.031[2]	--	--		
Selenium	µg/L	4.1	--	8.2		
	lbs/day[3]	0.43	--	0.85		
Cyanide	µg/L	4.3	--	8.5		
	lbs/day[3]	0.45	--	0.89		

[1] This limitation is derived from the final waste load allocation, as set forth in the *Calleguas Creek Watershed Metals TMDL,* established by the Regional Board on June 8, 2006. The TMDL became effective on March 26, 2007. This final effluent limitation will apply on the effective date of this permit.

[2] This limitation does not become operative until March 26, 2017 in accordance with the *Calleguas Creek Watershed Metals TMDL,* established by the Regional Board on June 8, 2006. This limitation is derived from the waste load allocation (WLA) for mercury specified in pounds per month as set forth in the said TMDL. The TMDL became effective on March 26, 2007. Consistent with the TMDL, the ten-year compliance period is based on the estimated time frame for completing the relevant implementation actions delineated in the TMDL and shown in Table 7-19.2 in Attachment A to Resolution No. R4-2006-012. The TMDL assigns an interim waste load allocation and allows ten-year compliance schedule with re-evaluation of the interim WLA by March 25, 2012. An interim effluent limit based on the interim waste load allocations has been incorporated into this NPDES Order and will apply on the Order's effective date (See Section IV.A.3.).

[3] The mass emission rates are based on the plant design flow rate of 12.5 mgd, and are calculated as follows: Flow (MGD) x Concentration (mg/L) x 8.34 (conversion factor) = lbs/day. During wet-weather storm events in which the flow exceeds the design capacity, the mass discharge rate limitations shall not apply, and concentration limitations will provide the only applicable effluent limitations.

Parameter	Units	Effluent Limitations				
		Average Monthly	Average Weekly	Maximum Daily	Instantaneous Minimum	Instantaneous Maximum
Chlorpyrifos	µg/L	0.014[4]	--	--		
	lbs/day	--	--	--		
Diazinon	µg/L	0.1[4]	--	0.1[4]		
	lbs/day	--	--	--		
Toxicity	TU_c	1.0[5]	--	--		
	--	--	--	--		
Chlordane	µg/L	0.00059[6]	--	0.0012[6]		
	lbs/day	--	--	--		
4,4'-DDD	µg/L	0.00084[6]	--	0.0017[6]		
	lbs/day	--	--	--		
4,4'-DDE	µg/L	0.00059[6]	--	0.0012[6]		
	lbs/day	--	--	--		
4,4'-DDT	µg/L	0.00059[6]	--	0.0012[6]		
	lbs/day	--	--	--		
Dieldrin	µg/L	0.00014[6]	--	0.00028[6]		
	lbs/day	--	--	--		
	µg/L	0.00017[6]	--	0.00034[6]		

[4] This limitation is derived from the final waste load allocation as set forth in the *Calleguas Creek Watershed Toxicity TMDL,* established by the Regional Board on July 7, 2005. The TMDL became effective on March 24, 2006. Consistent with the TMDL, the final WLA-based limit became operative on March 23, 2008. The interim limits specified in this TMDL lapsed prior to the date this permit was renewed. Therefore, only final WLA-based limits are incorporated into this permit.

[5] The *Calleguas Creek Watershed Toxicity TMDL* includes a waste load allocations of 1.0 TUc toxicity, which is required to be implemented in accordance with USEPA, State Board, and Regional Board resolutions, guidance and policy at the time of permit issuance or renewal. Consistent with the TMDL Implementation Plan and the staff report, this toxicity "limit" will be implemented~~ing the WLAs shall currently serve~~ as a trigger~~, not an enforceable limitation,~~ for initiation of ~~a~~ the TRE/TIE process. Within 48 hours of knowledge of an exceedance of the 1.0 TUc, the Discharger shall conduct six accelerated tests within a 12-week period. If three of the six accelerated tests exceed 1.0 TUc, then the Discharger shall initiate TIE/TRE process, per protocols ~~as~~ outlined in USEPA's "Understanding and Accounting for Method Variability in Whole Effluent Toxicity Applications Under the National Pollutant Discharge Elimination System Program" (2000) and ~~current NPDES permits held by dischargers to the Calleguas Creek Watershed~~ any provision of this Order. Failure to complete the accelerated monitoring and/or failure to initiate the TIE/TRE process is enforceable by the Regional Board.

[6] This limitation shall not become operative until up to March 24, 2026 in accordance with the *Calleguas Creek Watershed Organochlorine Pesticide, PCB, and Siltation TMDL,* established by the Regional Board on July 7, 2005. This limitation is derived from the waste load allocation set forth in said TMDL. The TMDL became effective on March 24, 2006. Consistent with the TMDL, the ten-year compliance period is based on the estimated time frame for completing the relevant implementation actions delineated in the TMDL and shown in Table 7-19.2 in Attachment A to Resolution No. R4-2006-012. Prior to the effective date of the final WLA-based limits, the TMDL specifies interim waste load allocations, which may be re-evaluated and reconsidered five, ten, and fifteen years after the TMDL effective date based on State Implementation Policy procedures. Interim limits consistent with those interim waste load allocations have been incorporated into the NPDES Order and will apply on the effective date of this NPDES Order (See Section IV.A.3.).

Parameter	Units	Effluent Limitations				
		Average Monthly	Average Weekly	Maximum Daily	Instantaneous Minimum	Instantaneous Maximum
PCBs	lbs/day	--	--	--		
Toxaphene	µg/L	0.00016[6]	--	0.00033[6]		
	lbs/day	-	--	-		
Ammonia Nitrogen	mg/L	2.4[7]	--	3.3[7]		
	lbs/day	--	--	2.9xQ[8]		

5. Whole Effluent Toxicity (WET)

The permit contains effluent limitations for toxicity based upon the Calleguas Creek Watershed Toxicity TMDL.
In general, the toxicity numeric effluent limitations are based on:

a. 40 C.F.R. 122.44(d)(v) – limits on whole effluent toxicity are necessary when chemical-specific limits are not sufficient to attain and maintain applicable numeric or narrative water quality standards;

b. 40 C.F.R. 122.44(d)(vi)(A) – where a State has not developed a water quality criterion for a specific pollutant that is present in the effluent and has reasonable potential, the permitting authority can establish effluent limits using numeric water quality criterion;

c. Basin Plan objectives and implementation provisions for toxicity;

d. Regions 9 & 10 Guidance for Implementing Whole Effluent Toxicity Programs Final May 31, 1996;

e. Whole Effluent Toxicity (WET) Control Policy July 1994; and,

f. Technical Support Document (several chapters and Appendix B).

However, the circumstances warranting a numeric chronic toxicity effluent limitation when there is reasonable potential were under review by the State Water Resources

[7] This limitation is derived from the final waste load allocation for ammonia nitrogen, as set forth in the *Nitrogen Compounds and Related Effects TMDL,* established by the Regional Board on October 24, 2002. Final Waste Load Allocations became operative on October 24, 2004.

[8] This limitation is derived from the final waste load allocation for ammonia nitrogen, as set forth in Resolution No. R4-2008-0XX, *Amendment to the Water Quality Control Plan for the Los Angeles Region through revision of the Waste Load Allocations for the Calleguas Creek Watershed Nitrogen Compounds and Related Effects Total Maximum Daily Load*, adopted by the Regional Board on September 11, 2008.

Q represents the POTW effluent flow at the time the water quality measurement is collected and a conversion factor to lbs/day based on the units of measure for the flow.

Control Board (State Board) in SWRCB/OCC Files A-1496 & A-1496(a) [Los Coyotes/Long Beach Petitions]. On September 16, 2003, at a public hearing, the State Board adopted Order No. 2003-0012 deferring the issue of numeric chronic toxicity effluent limitations until a subsequent Phase of the SIP is adopted. In the mean time, the State Board replaced the numeric chronic toxicity limit with a narrative effluent limitation and a 1 TUc trigger, in the Long Beach and Los Coyotes WRP NPDES permits. This permit contains a similar narrative chronic toxicity effluent limitation, with a numeric trigger for accelerated monitoring.
Phase II of the SIP has been adopted, however the toxicity control provisions were not revised.

On January 17, 2006, the State Board Division of Water Quality held a California Environmental Quality Act (CEQA) scoping meeting to seek input on the scope and content of the environmental information that should be considered in the planned revisions of the Toxicity Control Provisions of the Policy for Implementation of Toxics Standards for Inland Surface Waters, Enclosed Bays, and Estuaries of California (SIP). However, the Toxicity Control Provisions of the SIP continue unchanged.

This Order contains a reopener to allow the Regional Board to modify the permit, if necessary, consistent with any new policy, law, or regulation. Until such time, this Order will have toxicity limitations that are consistent with the State Board's precedential decision.

a. Acute Toxicity Limitation:

   The Dischargers may test for acute toxicity by using USEPA's *Methods for Measuring the Acute Toxicity of Effluents and Receiving Waters to Freshwater and Marine Organisms*, October 2002 (EPA-821-R-02-012). Acute toxicity provisions in the accompanying Order are derived from the Basin Plan's toxicity standards (Basin Plan 3-16 and 3-17). The provisions require the Discharger to accelerate acute toxicity monitoring and take further actions to identify the source of toxicity and to reduce acute toxicity.

b. Chronic Toxicity Limitation and Requirements:

   The previous Order contained a narrative chronic toxicity effluent limitation with a trigger for accelerated monitoring. This Order will contain a numeric chronic toxicity limit, consistent with the WLA assigned to the Simi Valley WQCP in the Calleguas Creek Watershed Toxicity TMDL. Chronic toxicity provisions in the accompanying Order require the Discharger to accelerate chronic toxicity monitoring and take further actions to identify the source of toxicity and to reduce chronic toxicity.

D. Final Effluent Limitations

1. Satisfaction of Anti-Backsliding Requirements

The effluent limitations in this Order are at least as stringent as the effluent limitations in the previous Order, with the exception of effluent limitations for antimony, arsenic, cadmium, chromium VI, lead, silver, thallium, zinc, tetrachloroethylene 1,4-dichlororbenzene, and lindane (gamma-BHC). The effluent limitations for these pollutants are deleted because they did not show reasonable potential to be in the effluent water. This relaxation of effluent limitations is consistent with the anti-backsliding requirements of the CWA and federal regulations.

2. Satisfaction of Antidegradation Policy

On October 28, 1968, the State Board adopted Resolution No. 68-16*, Maintaining High Quality Water*, which established an antidegradation policy for State and Regional Boards. The State Board has, in State Board Order No. 86-17 and an October 7, 1987 guidance memorandum, interpreted Resolution No. 68-16 to be fully consistent with the federal antidegradation policy. Similarly, the CWA (section 304(d)(4)(B)) and USEPA regulations (40 C.F.R., Part 131.12) require that all permitting actions be consistent with the federal antidegradation policy. Together, the State and Federal policies are designed to ensure that a water body will not be degraded resulting from the permitted discharge. Discharges in conformance with the provisions of this Order will not result in a lowering of water quality and therefore conform to the antidegradation policies.

3. Stringency of Requirements for Individual Pollutants

This Order contains both technology-based and water quality-based effluent limitations for individual pollutants. The technology-based effluent limitations consist of restrictions on BOD, TSS, pH, and percent removal of BOD and TSS. Restrictions on BOD, TSS and pH are discussed in Section IV.B. of the Fact Sheet. This Order's technology-based pollutant restrictions implement the minimum, applicable federal technology-based requirements. In addition, this Order contains effluent limitations more stringent than the minimum, federal technology-based requirements that are necessary to meet water quality standards.

Water quality-based effluent limitations have been scientifically derived to implement water quality objectives that protect beneficial uses. Both the beneficial uses and the water quality objectives have been approved pursuant to federal law and are the applicable federal water quality standards. To the extent that toxic pollutant water quality-based effluent limitations were derived from the CTR, the CTR is the applicable standard pursuant to Part 131.38. The scientific procedures for calculating the individual water quality-based effluent limitations for priority pollutants are based on the CTR-SIP, which was approved by USEPA on May 18, 2000. All beneficial uses and water quality objectives contained in the Basin Plan were approved under state law and submitted to and approved by USEPA prior to May

30, 2000. Any water quality objectives and beneficial uses submitted to USEPA prior to May 30, 2000, but not approved by USEPA before that date, are nonetheless applicable water quality standards for purposes of the CWA pursuant to Part 131.21(c)(1). Collectively, this Order's restrictions on individual pollutants are no more stringent than required to implement the requirements of the CWA and the applicable water quality standards for purposes of the CWA.

Summary of Final Effluent Limitations
Discharge Points 001 and 002

Table 7. Summary of Final Effluent Limitations

Parameter	Units	Effluent Limitations					Basis
		Average Monthly	Aver-age Weekly	Maximum Daily	Instantaneous Minimum	Instantaneous Maximum	
$BOD_5 20^oC$	mg/L	20	30	45			Existing
	lbs/day[9]	2,080	3,130	4,690			
Total Suspended Solids (TSS)	mg/L	15	40	45			Existing
	lbs/day[9]	1,560	4,170	4,690			
pH	standard units	--	--	--	6.5	8.5	Existing

[9] The mass emission rates are based on the plant design flow rate of 12.5 mgd, and are calculated as follows: Flow (MGD) x Concentration (mg/L) x 8.34 (conversion factor) = lbs/day. During wet-weather storm events in which the flow exceeds the design capacity, the mass discharge rate limitations shall not apply, and concentration limitations will provide the only applicable effluent limitations.

Parameter	Units	Effluent Limitations					Basis
		Average Monthly	Aver-age Weekly	Maximum Daily	Instantaneous Minimum	Instantaneous Maximum	
Removal Efficiency for BOD and TSS	%	85	--	--			Existing
Oil and Grease	mg/L	10	--	15			Existing
	lbs/day[9]	1,040	--	1,560			
Settleable Solids	ml/L	0.1	--	0.3			Existing
Total Residual Chlorine	mg/L	--	--	0.1			Existing
	--	--	--	--			
Total Dissolved Solids (TDS)	mg/L	850[10]	--	--			Existing
	lbs/day[9]	88,600	--	--			
TDS	lbs/day	850 x Q-AF[11]	--	--			TMDL
Sulfate	mg/L	250[10]	--	--			Existing
	lbs/day[9]	26,100	--	--			
Sulfate	lbs/day	250 x Q-AF[11]	--	--			TMDL
Chloride	lbs/day	--	--	10,100[12]			Existing
	lbs/day	--	--	9,200[13]			

[10] The interim effluent limitation shown in Table 7 of this Order for the same parameter shall supercede this effluent limitation upon the effective date of the *Calleguas Creek Watershed Salts TMDL (Salts TMDL)* established by this Regional Board on October 4, 2007. At the time the interim limits in Table 7 of this Order are operative, the mass-based limit corresponding to this interim effluent limit will be adjusted in accordance with the formula shown in footnote above.

[11] This limitation shall become operative fifteen years after the effective date of the *Salts TMDL*, established by the Regional Board on October 4, 2007. The TMDL will become effective following approval from USEPA. Consistent with the TMDL, this limitation is derived from the final WLA in the *Salts TMDL* and will supercede any previous applicable effluent limitation. Prior to the operative date of the final WLA-based limits, the TMDL specifies interim waste load allocations for total dissolved solids, sulfate, and chloride, which may be re-evaluated three, seven, and ten years after the TMDL effective date. Interim limits for TDS, sulfate, and chloride, consistent with the interim waste load allocations have been incorporated into the NPDES Order and will apply on the effective date of *Salts TMDL* (See Section IV.A.3.).

Consistent with *Salts TMDL,* these limits apply only during dry weather (as defined in the *Salts TMDL*).
AF represents the adjustment factor, which equals the difference between the minimum salts export requirement and the actual salts export.
Q represents the POTW flow at the time the water quality measurement is collected and a conversion factor to lbs/day based on the units of measure for the flow.

[12] This limitation will be superseded by the interim effluent limit for chloride shown in Table 7 of this Order, upon the effective date of the *Calleguas Creek Watershed Salts TMDL*. This limitation is derived from the waste load allocation for chloride under routine conditions, as set forth in the Chloride TMDL, established by USEPA on March 22, 2002.

[13] This limitation will be superseded by the interim effluent limit for chloride shown in Table 7 of this Order, upon the effective date of the *Calleguas Creek Watershed Salts TMDL*. This limitation is derived from the waste load allocation for chloride under drought conditions, as set forth in the Chloride TMDL, established by

Parameter	Units	Effluent Limitations					Basis
		Average Monthly	Aver-age Weekly	Maximum Daily	Instantaneous Minimum	Instantaneous Maximum	
Chloride	lbs/day	150 x Q-AF[11]	--	--			TMDL
Boron	mg/L	1	--	--			Existing
	lbs/day[9]	104	--	--			
MBAS	mg/L	0.5	--	--			Existing
	lbs/day[9]	50	--	--			
Ammonia Nitrogen	mg/L	2.4[14]	--	3.3[14]			TMDL
	lbs/day	--	--	2.9xQ[15]			
Nitrate + Nitrite (as N)	mg/L	9[16]	--	--			TMDL
	lbs/day	--	--	--			
Nitrate (as N)	mg/L	9[17]	--	--			TMDL
	lbs/day	--	--	--			
Nitrite (as N)	mg/L	0.9[18]	--	--			TMDL
	lbs/day	--	--	--			

USEPA on March 22, 2002. The Chloride TMDL provides that drought conditions exist when the flow in Arroyo Simi 2 cubic feet per second (cfs) or less.

[14] This limitation is derived from the final waste load allocation for ammonia nitrogen, as set forth in the *Nitrogen Compounds and Related Effects TMDL,* established by the Regional Board on October 24, 2002. Final Waste Load Allocations became operative on October 24, 2004.

[15] This limitation is derived from the final waste load allocation for ammonia nitrogen, as set forth in Resolution No. R4-2008-0XX, *Amendment to the Water Quality Control Plan for the Los Angeles Region through revision of the Waste Load Allocations for the Calleguas Creek Watershed Nitrogen Compounds and Related Effects Total Maximum Daily Load*, adopted by the Regional Board on September 11, 2008.

Q represents the POTW effluent flow at the time the water quality measurement is collected and a conversion factor to lbs/day based on the units of measure for the flow.

[16] This limitation is derived from the final waste load allocation for nitrate plus nitrite nitrogen, as set forth in the *Nitrogen Compounds and Related Effects TMDL,* established by the Regional Board on October 24, 2002. Final Waste Load Allocations became operative on July 16, 2007. However, this limitation will not be in effect until after April 30, 2009, as set forth in the accompanying amended Time Schedule Order R4-2008-YYYY.

[17] This limitation is derived from the final waste load allocation for nitrate nitrogen, as set forth in the *Nitrogen Compounds and Related Effects TMDL,* established by the Regional Board on October 24, 2002. Final Waste Load Allocations became operative on July 16, 2007.

[18] This limitation is derived from the final waste load allocation for nitrite nitrogen, as set forth in the *Nitrogen Compounds and Related Effects TMDL*, established by the Regional Board on October 24, 2002. Final Waste Load Allocations became operative on July 16, 2007.

Parameter	Units	Effluent Limitations					Basis
		Average Monthly	Aver-age Weekly	Maximum Daily	Instantaneous Minimum	Instantaneous Maximum	
Copper	µg/L	30.5[19]	--	31[19]			TMDL
	lbs/day	--	--	--			
Nickel	µg/L	169[19]	--	960[19]			TMDL
	lbs/day	--	--	--			
Mercury	lbs/month	0.031[20]	--	--			TMDL
Selenium	µg/L	4.1	--	8.2			SIP/CTR
	lbs/day[9]	0.43	--	0.85			
Cyanide	µg/L	4.3	--	8.5			SIP/CTR
	lbs/day[9]	0.45	--	0.89			
Chlorpyrifos	µg/L	0.014[21]	--	--			TMDL
	lbs/day	--	--	--			
Diazinon	µg/L	0.1[21]	--	0.1[21]			TMDL
	lbs/day	--	--	--			

[19] This limitation is derived from the final waste load allocation, as set forth in the *Calleguas Creek Watershed Metals TMDL,* established by the Regional Board on June 8, 2006. The TMDL became effective on March 26, 2007. This final effluent limitation will apply on the effective date of this permit.

[20] This limitation does not become operative until March 26, 2017 in accordance with the *Calleguas Creek Watershed Metals TMDL,* established by the Regional Board on June 8, 2006. This limitation is derived from the waste load allocation (WLA) for mercury specified in pounds per month as set forth in the said TMDL. The TMDL became effective on March 26, 2007. Consistent with the TMDL, the ten-year compliance period is based on the estimated time frame for completing the relevant implementation actions delineated in the TMDL and shown in Table 7-19.2 in Attachment A to Resolution No. R4-2006-012. The TMDL assigns an interim waste load allocation and allows ten-year compliance schedule with re-evaluation of the interim WLA by March 25, 2012. An interim effluent limit based on the interim waste load allocations has been incorporated into this NPDES Order and will apply on the Order's effective date (See Section IV.A.3.).

[21] This limitation is derived from the final waste load allocation as set forth in the *Calleguas Creek Watershed Toxicity TMDL,* established by the Regional Board on July 7, 2005. The TMDL became effective on March 24, 2006. Consistent with the TMDL, the final WLA-based limit became operative on March 23, 2008. The interim limits specified in this TMDL lapsed prior to the date this permit was renewed. Therefore, only final WLA-based limits are incorporated into this permit.

Parameter	Units	Effluent Limitations					Basis
		Average Monthly	Aver-age Weekly	Maximum Daily	Instantaneous Minimum	Instantaneous Maximum	
Toxicity	TU_c	1.0[22]	--				TMDL
Chlordane	µg/L	0.00059[23]	--	0.0012[23]			TMDL
	lbs/day	--	--	--			
4,4'-DDD	µg/L	0.00084[23]	--	0.0017[23]			TMDL
	lbs/day	--	--	--			
4,4'-DDE	µg/L	0.00059[23]	--	0.0012[23]			TMDL
	lbs/day	--	--	--			
4,4'-DDT	µg/L	0.00059[23]	--	0.0012[23]			TMDL
	lbs/day	--	--	--			
Dieldrin	µg/L	0.00014[23]	--	0.00028[23]			TMDL
	lbs/day	--	--	--			
PCBs	µg/L	0.00017[23]	--	0.00034[23]			TMDL
	lbs/day	--	--	--			
Toxaphene	µg/L	0.00016[23]	--	0.00033[23]			TMDL
	lbs/day	--	--	--			
Halomethanes[24]	µg/L	80	--	--			Existing
	lbs/day[9]	8	--	--			

[22] The *Calleguas Creek Watershed Toxicity TMDL* includes waste a load allocations of 1.0 TUc toxicity, which is required to be implemented in accordance with USEPA, State Board, and Regional Board resolutions, guidance and policy at the time of permit issuance or renewal. Consistent with the TMDL Implementation Plan and the staff report, this toxicity "limit" will be implemented~~ing the WLAs shall currently serve~~ as a trigger~~, not an enforceable limitation,~~ for initiation of ~~a~~ the TRE/TIE process. Within 48 hours of knowledge of an exceedance of the 1.0 TUc, the Discharger shall conduct six accelerated tests within a 12-week period. If three of the six accelerated tests exceed 1.0 TUc, then Discharger shall initiate TIE/TRE process, per protocols ~~as~~ outlined in USEPA's "Understanding and Accounting for Method Variability in Whole Effluent Toxicity Applications Under the National Pollutant Discharge Elimination System Program" (2000) and ~~current NPDES permits held by dischargers to the Calleguas Creek Watershed~~ any provision of this Order. Failure to complete the accelerated monitoring and/or failure to initiate the TIE/TRE process is enforceable by the Regional Board.

[23] This limitation shall not become operative until up to March 24, 2026 in accordance with the *Calleguas Creek Watershed Organochlorine Pesticide, PCB, and Siltation TMDL,* established by the Regional Board on July 7, 2005. This limitation is derived from the waste load allocation ser forth in said TMDL. The TMDL became effective on March 24, 2006. Consistent with the TMDL, the ten-year compliance period is based on the estimated time frame for completing the relevant implementation actions delineated in the TMDL and shown in Table 7-19.2 in Attachment A to Resolution No. R4-2006-012. Prior to the effective date of the final WLA-based limits, the TMDL specifies interim waste load allocations, which may be re-evaluated and re-considered five, ten, and fifteen years after the TMDL effective date based on State Implementation Policy procedures. Interim limits consistent with those interim waste load allocations have been incorporated into the NPDES Order and will apply on the effective date of this NPDES Order (See Section IV.A.3.).

[24] Halomethanes shall mean the sum of bromoform, bromodichloromethane, chloroform, and dibromochloromethane.

E. Interim Effluent Limitations

Interim limits have been set as follows:

1. **Metals TMDL-based Interim limits for Mercury**: During the period beginning ~~July 25~~October 31, 2008 (Permit Effective Date) and ending on ~~May~~August 10, 2013 (Permit Expiration Date), the Discharger shall maintain compliance with the mercury effluent limitation in Table 7 of this Order at Discharge Points 001 and 002, with compliance measured at Monitoring Location EFF-001 as described in the attached MRP. This interim effluent limitation shall apply in lieu of the corresponding final effluent limitation for mercury for the duration of this Order and in accordance with the *Calleguas Creek Watershed Metals TMDL* (Table 7-19.2 in Attachment A to Resolution R4-2006-012, which became effective on March 26, 2007, and established a 10-year compliance period for achieving the final wasteload allocation for mercury.

2. **OC Pesticides, PCBs, and Siltation TMDL-based Interim limits**: During the period beginning ~~July 25~~October 31, 2008 (Permit Effective Date) and ending on ~~May~~August 10, 2013 (Permit Expiration Date), the Discharger shall maintain compliance with chlordane, 4,4'-DDD, 4,4'-DDE, 4,4'-DDT, dieldrin, PCBs, and toxaphene effluent limitations in Table 7 of this Order, at Discharge Points 001 and 002, with compliance measured at Monitoring Location EFF-001 as described in the attached MRP. These interim effluent limitations shall apply in lieu of the corresponding final effluent limitations specified for the same parameters for the duration of this Order and in accordance with the *Calleguas Creek Watershed Organochlorine Pesticide, PCB, and Siltation TMDL* (Table 7-17.2 in Attachment A to Resolution R4-2005-010) which became effective on March 24, 2006. The TMDL specifies that these interim limits may be re-evaluated five, ten, and fifteen years after the TMDL effective date.

3. **Boron, Chloride, Sulfate, and TDS (Salts) TMDL-based Interim limits**: On October 4, 2007, the Regional Water Board adopted the *Calleguas Creek Watershed Salts TMDL.* This TMDL was not effective on the date of adoption of this NPDES permit because USEPA had not approved it as of that date. Following USEPA approval of this TMDL, the interim effluent limitation for TDS, sulfate, and chloride in Table 7 shall apply for a 15-year period after the effective date of the TMDL, and shall be re-evaluated in accordance with the implementation schedule established in the TMDL. Final effluent limitations in lbs/day for chloride, TDS, sulfate, and boron shall apply fifteen years after the effective date of the TMDL. If USEPA does not approve the *Salts TMDL*, the interim effluent limitations shall not apply. However, an interim limit of 190 mg/L for chloride will be operative on the effective date of this permit consistent with Time Schedule Order No. R4-2008-YYXX, which the Regional Water Board shall adopt simultaneously with this NDPES permit.

4. **NON-SIP/CTR-based Interim limits**: On August 9, 2007, the Regional Water Board adopted Time Schedule Order (TSO) No. R4-2007-0038 which allows the discharger to make necessary modifications to the nitrification/denitrification system to achieve full compliance with the final effluent limitations for nitrate plus nitrite as nitrogen prescribed in Order No. R4-2003-0081. The TSO prescribed interim limits for nitrate plus nitrite as nitrogen for the facility to comply with the final effluent limits by April 30, 2009. The interim limits and compliance schedule will be carried forward pursuant to amended TSO No. R4-2008-YYYY, which the Regional Water Board shall adopt simultaneously with this permit.

Table 8. Summary of Interim Effluent Limitations

Parameter	Units	Effluent Limitations				
		Average Monthly	Average Weekly	Maximum Daily	Instantaneous Minimum	Instantaneous Maximum
Mercury	lbs/month	0.18[25]	--	--		
Chlordane	µg/L	--	--	0.1[26]		
4,4'-DDD	µg/L	--	--	0.05[26]		
4,4'-DDE	µg/L	--	--	0.0012[26]		
4,4'-DDT	µg/L	--	--	0.01[26]		
Dieldrin	µg/L	--	--	0.01[26]		
PCBs	µg/L	--	--	0.5[26]		
Toxaphene	µg/L	--	--	0.5[26]		
Total Dissolved Solids	mg/L	955[27]	--			
	mg/L					

[25] This interim effluent limitation, specified in pounds per month, is derived from the interim waste load allocation set forth in the *Calleguas Creek Metals TMDL*, established by the Regional Board on June 8, 2006. The TMDL became effective on March 26, 2007. This limitation shall apply in lieu of the corresponding final effluent limitations specified for mercury in Table 6 of this Order, during the time period indicated in this provision.

[26] This interim effluent limitation is derived from the interim waste load allocation as set forth in the *Calleguas Creek Watershed Organochlorine Pesticides, Polychlorinated Biphenyls, and Siltation* TMDL, established by the Regional Board on July 5, 2005. The TMDL became effective on March 24, 2006. This limitation shall apply in lieu of the corresponding final effluent limitations specified for the same parameter in Table 6a of this Order during the time period indicated in this provision. The TMDL specifies that these interim limits may be re-evaluated five, ten, and fifteen years after the TMDL effective date.

[27] The interim limit for this constituent is specified in the *Calleguas Creek Watershed Salts TMDL,* established by the Regional Board on October 4, 2007. Following USEPA approval of the TMDL, this interim effluent limitation shall apply in lieu of the corresponding final effluent limitations specified for the same parameter during the time period indicated in this provision. If USEPA does not approve the *Salts TMDL*, this TMDL-based interim limitation shall not apply.

Parameter	Units	Effluent Limitations				
		Average Monthly	Average Weekly	Maximum Daily	Instantaneous Minimum	Instantaneous Maximum
Sulfate		298[27]	--			
Chloride	mg/L	183[27]	--			

F. Reclamation Specifications

The Discharger currently recycles approximately 0.6% (18.25 million gallons per year) of the total treated effluent and plans to continue doing so. Recycled water is used for landscape irrigation at the Simi Valley WQCP and for dust control at a landfill. The production, distribution, and reuse of recycled water are presently regulated under Water Reclamation Requirements (WRR) Order No. 87-46, adopted by this Board on May 5, 1987.

V. RATIONALE FOR RECEIVING WATER LIMITATIONS

A. Surface Water

Receiving water limitations are based on water quality objectives contained in the Basin Plan and are a required part of this Order.

B. Groundwater

Limitations in this Order must protect not only surface receiving water beneficial uses, but also, the beneficial uses of underlying groundwater where there is a recharge beneficial use of the surface water. In addition to a discharge to surface water, there is discharge that can impact groundwater. Sections of the Arroyo Simi and Calleguas Creek, near Simi Valley WQCP discharge points, are designated as GWR beneficial use. Surface water from the Arroyo Simi percolates into the Simi Valley and Ventura Central Groundwater Basins with MUN beneficial use specified in the Basin Plan. Since groundwater from these Basins is used to provide drinking water to the community, the groundwater aquifers should be protected. However, this Order and Monitoring and Reporting Program does not include requirement for groundwater monitoring because none of the limitations are based upon the protection of MUN use of underlying groundwater. For constituents that have limitations, the limits are based upon Basin Plan and CTR, are also protective of the beneficial uses of groundwater.

VI. RATIONALE FOR MONITORING AND REPORTING REQUIREMENTS

Part 122.48 requires that all NPDES permits specify requirements for recording and reporting monitoring results. Water Code sections 13267 and 13383 authorizes the Regional Water Board to require technical and monitoring reports. The Monitoring and Reporting Program (MRP), Attachment E of this Order, establishes monitoring and reporting requirements to implement federal and state requirements. The following provides the rationale for the monitoring and reporting requirements contained in the MRP for this facility.

A. Influent Monitoring

Influent monitoring is required:

- To determine compliance with the permit conditions for BOD_5 20°C and suspended solids removal rates;
- To assess treatment plant performance;
- To assess the effectiveness of the Pretreatment Program (once a pretreatment program is in place); and,
- As a requirement of the Pollution Minimization Program

B. Effluent Monitoring

The Discharger is required to conduct monitoring of the permitted discharges in order to evaluate compliance with permit conditions. Monitoring requirements are given in the proposed Monitoring and Reporting Program (Attachment E). This provision requires compliance with the Monitoring and Reporting Program, and is based on 40 C.F.R. Parts 122.44(i), 122.62, 122.63, and 124.5. The Monitoring and Reporting Program is a standard requirement in almost all NPDES permits (including the proposed Order) issued by the Regional Water Board. In addition to containing definition of terms, it specifies general sampling/analytical protocols and the requirements of reporting spills, violation, and routine monitoring data in accordance with NPDES regulations, the California Water Code, and Regional Water Board policies. The Monitoring and Reporting Program also contains sampling program specific for the Discharger's wastewater treatment plant. It defines the sampling stations and frequency, pollutants to be monitored, and additional reporting requirements. Pollutants to be monitored include all pollutants for which effluent limitations are specified. Further, in accordance with Section 1.3 of the SIP, a periodic monitoring is required for all priority pollutants defined by the CTR, for which criteria apply and for which no effluent limitations have been established, to evaluate reasonable potential to cause or contribute to an excursion above a water quality standard.

Monitoring for those pollutants expected to be present in the discharge from the facility will be required as shown on the proposed Monitoring and Reporting Program (Attachment E) and as required in the SIP. Monitoring requirements are largely

unchanged from the previous Order. Annual monitoring for priority pollutants in the effluent is required in accordance with the SIP.

The changes in the effluent monitoring are summarized in the following table.

Table 9. Effluent Monitoring Program Comparison Table

Parameter	Monitoring Frequency (2003 Permit)	Monitoring Frequency (2008 Permit)
Total residual chlorine	continuous	continuous
Total residual chlorine	--	daily
Algal biomass (Chlorophyll a)	monthly	deleted
Chronic Toxicity	monthly	no change
Acute Toxicity	quarterly	no change
Iron	quarterly	semiannually
Fluoride	monthly	semiannually
Antimony	quarterly	semiannually
Arsenic	quarterly	semiannually
Beryllium	semiannually	no change
Cadmium	quarterly	semiannually
Chromium III	semiannually	no change
Chromium VI	quarterly	semiannually
Copper	quarterly	monthly
Lead	quarterly	semiannually
Mercury	quarterly	monthly
Nickel	quarterly	monthly
Selenium	monthly	no change
Silver	quarterly	semiannually
Thallium	quarterly	semiannually
Zinc	quarterly	semiannually
Cyanide	monthly	no change
2,3,7,8-TCDD (Dioxin)	quarterly	semiannually
Bromoform	quarterly	monthly
Dibromochloromethane	quarterly	monthly
Chloroform	quarterly	monthly
Bromodichloromethane	quarterly	monthly
Tetrachloroethylene	quarterly	semiannually
N-Nitrosodi-n-propylamine	semiannually	no change
Gamma-BHC (Lindane)	monthly	semiannually
Chlordane	semiannually	quarterly
4,4'-DDT	semiannually	quarterly
4,4'- DDE	monthly	quarterly
4,4'-DDD	semiannually	quarterly
Dieldrin	semiannually	quarterly
Endrin	quarterly	semiannually
Heptachlor epoxide	semiannually	no change
PCBs	semiannually	quarterly

Parameter	Monitoring Frequency (2003 Permit)	Monitoring Frequency (2008 Permit)
Aroclor 1016	semiannually	quarterly
Aroclor 1221	semiannually	quarterly
Aroclor 1232	semiannually	quarterly
Aroclor 1242	semiannually	quarterly
Aroclor 1248	semiannually	quarterly
Aroclor 1254	semiannually	quarterly
Aroclor 1260	semiannually	quarterly
Toxaphene	quarterly	no change
Chlorpyrifos	--	quarterly
Diazinon	--	quarterly
Methoxychlor	quarterly	semiannually
Barium	quarterly	semiannually
2,4-D	quarterly	semiannually
2,4,5-TP (Silvex)	quarterly	semiannually
Halomethanes[28]	quarterly	monthly
Ammonium perchlorate	semiannually	no change
1,4-Dioxane	semiannually	no change
1,2,3-Trichloropropane	semiannually	no change
Methyl-tert-butyl-ether (MTBE)	--	semiannually
Remaining USEPA priority pollutant not listed on this Table	--	semiannually

The reduction of monitoring frequencies for priority pollutants listed in the above Table is warranted because the previous monitoring data for these pollutants indicate that the discharge did not demonstrate reasonable potential to exceed water quality standards.

C. Whole Effluent Toxicity Testing Requirements

Whole effluent toxicity (WET) protects the receiving water quality from the aggregate toxic effect of a mixture of pollutants in the effluent. An acute toxicity test is conducted over a short time period and measures mortality. A chronic toxicity test is conducted over a longer period of time and may measure mortality, reproduction, and growth.

This requirement establishes conditions and protocol by which compliance with the TMDL WLA for toxicity, consistent with Section 4.0 of the SIP. Conditions include required monitoring and evaluation of the effluent for acute and chronic toxicity and a 1.0 TUc numerical value for chronic toxicity, to be used as 'triggers' for initiating accelerated monitoring and toxicity reduction evaluation(s).

D. Receiving Water Monitoring

[28] Halomethanes shall mean the sum of bromoform, bromodichloromethane, chloroform, and dibromochloromethane.

1. Surface Water

Receiving water monitoring is required to determine compliance with receiving water limitations and to characterize the water quality of the receiving water.

2. Groundwater

Groundwater monitoring is required to determine compliance with groundwater limitations and to track impacts to the groundwater basins. However, this Order and Monitoring and Reporting Program does not include requirement for groundwater monitoring because none of the limitations are based upon the protection of MUN use of underlying groundwater. For constituents that have limitations, the limits are based upon Basin Plan and CTR and are also protective of the beneficial uses of groundwater.

E. Other Monitoring Requirements

1. Watershed Monitoring and Bioassessment Monitoring

The goals of the Watershed-wide Monitoring Program including the bioassessment monitoring for the Calleguas Creek Watershed are to:

- Determine compliance with receiving water limits;
- Monitor trends in surface water quality;
- Ensure protection of beneficial uses;
- Provide data for modeling contaminants of concern;
- Characterize water quality including seasonal variation of surface waters within the watershed;
- Assess the health of the biological community; and
- Determine mixing dynamics of effluent and receiving waters in the estuary.

VII. RATIONALE FOR PROVISIONS

A. Standard Provisions

Standard Provisions, which apply to all NPDES permits in accordance with Part 122.41, and additional conditions applicable to specified categories of permits in accordance with Part 122.42, are provided in Attachment D. The discharger must comply with all standard provisions and with those additional conditions that are applicable under Part 122.42.

Part 122.41(a)(1) and (b) through (n) establish conditions that apply to all State-issued NPDES permits. These conditions must be incorporated into the permits either expressly or by reference. If incorporated by reference, a specific citation to the regulations must be included in the Order. Part 123.25(a)(12) allows the state to omit or modify conditions to impose more stringent requirements. In accordance with Part 123.25, this Order omits federal conditions that address enforcement authority specified

in Parts 122.41(j)(5) and (k)(2) because the enforcement authority under the California Water Code is more stringent. In lieu of these conditions, this Order incorporates by reference Water Code section 13387(e).

B. Special Provisions

1. Reopener Provisions

This provision is based on 40 C.F.R. Part 123. The Regional Water Board may reopen the permit to modify permit conditions and requirements. Causes for modifications include the promulgation of new regulations, modification in sludge use or disposal practices, or adoption of new regulations by the State Water Board or Regional Water Board, including revisions to the Basin Plan.

2. Special Studies and Additional Monitoring Requirements

a. **Antidegredation Analysis and Engineering Report for Proposed Plant Expansion.** This provision is base on the State Water Resources Control Board Resolution No. 68-16, which requires the Regional Water Board in regulation the discharge of waste to maintain high quality waters of the State, the Discharger must demonstrate that it has implemented adequate controls (e.g., adequate treatment capacity) to ensure that high quality waters will be maintained. This provision requires the Discharger to clarify it has increase plant capacity through the addition of new treatment system(s) to obtain alternative effluent limitations for the discharge from the treatment system(s). This provision requires the Discharger to report specific time schedules for the plants projects. This provision requires the Discharger to submit report to the Regional Water Board for approval.

b. **Operations Plan for Proposed Expansion.** This provision is based on section 13385(j)(1)(D) of the California Water Code and allows a time period not to exceed 90 days in which the Discharger may adjust and test the treatment system(s). This provision requires the Discharger to submit an Operations Plan describing the actions the Discharger will take during the period of adjusting and testing to prevent violations.

c. **Treatment Plant Capacity.** The treatment plant capacity study required by this Order shall serve as an indicator for the Regional Water Board regarding Facility's increasing hydraulic capacity and growth in the service area.

3. Best Management Practices and Pollution Prevention

a. **Pollutant Minimization Program.** This provision is based on the requirements of Section 2.4.5 of the SIP.

4. Construction, Operation, and Maintenance Specifications

This provision is based on the requirements of 40 C.F.R. 122.41(e) and the previous Order.

5. Special Provisions for Municipal Facilities (POTWs Only)

a. **Biosolids Requirements.** To implement CWA Section 405(d), on February 19, 1993, USEPA promulgated 40 C.F.R. 503 to regulate the use and disposal of municipal sewage sludge. This regulation was amended on September 3, 1999. The regulation requires that producers of sewage sludge meet certain reporting, handling, and disposal requirements. It is the responsibility of the Discharger to comply with said regulations that are enforceable by USEPA because California has not been delegated the authority to implement this program. The Discharger is also responsible for compliance with WDRs and NPDES permits for the generation, transport and application of biosolids issued by the State Board, other Regional Water Boards, Arizona Department of Environmental Quality or USEPA, to whose jurisdiction the Facility's biosolids will be transported and applied.

b. **Pretreatment Requirements.** This permit contains pretreatment requirements consistent with applicable effluent limitations, national standards of performance, and toxic and performance effluent standards established pursuant to Sections 208(b), 301, 302, 303(d), 304, 306, 307, 403, 404, 405, and 501 of the CWA, and amendments thereto. This permit contains requirements for the implementation of an effective pretreatment program pursuant to Section 307 of the CWA; 40 C.F.R. 35 and 403; and/or section 2233, Title 23, California Code of Regulations.

c. **Spill Reporting Requirements.** This Order established a reporting protocol for how different types of spills, overflow or bypasses of raw or partially treated sewage from its collection system or treatment plant covered by this Order shall be reported to regulatory agencies.

The State Water Board issued General Waste Discharge Requirements for Sanitary Sewer Systems, Water Quality Order No. 2006-0003-DWQ (General Order) on May 2, 2006. The General Order requires public agencies that own or operate sanitary sewer systems with greater than one mile of pipes or sewer lines to enroll for coverage under the General Order. The General Order requires agencies to develop sanitary sewer management plans (SSMPs) and report all sanitary sewer overflows (SSOs), among other requirements and prohibitions.

Furthermore, the General Order contains requirements for operation and maintenance of collection systems and for reporting and mitigating sanitary sewer overflows. The Discharger must comply with both the General Order and this Order.

6. Compliance Schedules

a. The compliance schedules and the interim limits in Section IV.A.3. of the accompanying NPDES Order are authorized under TMDLs (Basin Plan Amendments) which have been adopted by the Los Angeles Regional Board and approved by USEPA. However, interim limits and compliance schedules may be provided in an administratively issued Time Schedule Order if the permit effective date precedes the TMDL effective date. The stakeholders in the Calleguas Creek Watershed are embarking on a watershed-wide solution to salt management, which will include reverse osmosis treatment of potable water and construction of a brine line for brine disposal. The dischargers need time to complete the capital improvement projects. The *Calleguas Creek Watershed Salts TMDL* includes tasks and milestone dates for the various phases of the project.

b. This Order established interim effluent limitations for chloride for the Facility. The interim limits and compliance date are provided in the accompanying Time Schedule Order No. R4-2008-YYXX.

c. This Order established interim effluent limitations for nitrate + nitrite as nitrogen for the Facility. The interim limits and compliance date are provided in the accompanying Amended Time Schedule Order No. R4-2008-YYYY.

VIII. PUBLIC PARTICIPATION

The California Regional Water Quality Control Board, Los Angeles Region (Regional Water Board) is considering the issuance of waste discharge requirements (WDRs) that will serve as a National Pollutant Discharge Elimination System (NPDES) permit for Simi Valley Water Quality Control Plant. As a step in the WDR adoption process, the Regional Water Board staff has developed tentative WDRs. The Regional Water Board encourages public participation in the WDR adoption process.

A. Notification of Interested Parties

The Regional Water Board has notified the Discharger and interested agencies and persons of its intent to prescribe waste discharge requirements for the discharge and has provided them with an opportunity to submit their written comments and recommendations. Notification was provided by posting notices at Simi Valley WQCP, and at Simi Valley City Hall, Simi Valley, California.

B. Written Comments

The staff determinations are tentative. Interested persons are invited to submit written comments concerning these tentative WDRs. Comments must be submitted either in

person or by mail to the Executive Office at the Regional Water Board at the address above on the cover page of this Order.

To be fully responded to by staff and considered by the Regional Water Board, written comments must be received at the Regional Water Board offices by **12:00 p.m. (Noon) on May 5, 2008.** Written comments regarding the revised tentative Order must be received at the Regional Water Board offices by close of business on May 16, 2008. ~~Additional comments are not being solicited, as the comment period has ended.~~Written comments regarding the underlined/strikeout changes made to the revised tentative dated August 12, 2008, must be received at the Regional Water Board office no later than 12:00 p.m. (Noon) on August 26, 2008.

C. Public Hearing

The Regional Water Board will hold a public hearing on the tentative WDRs during its regular Board meeting on the following date and time and at the following location:

Date:	September 11, 2008
Time:	9:00 AM
Location:	City of Simi Valley, Council Chambers 2929 Tapo Canyon Road Simi Valley, California.

Interested persons are invited to attend. At the public hearing, the Regional Water Board will hear testimony, if any, pertinent to the discharge, WDRs, and permit. Oral testimony will be heard; however, for accuracy of the record, important testimony should be in writing.

Please be aware that dates and venues may change. Our Web address is http://www.waterboards.ca.gov/losangeles/ where you can access the current agenda for changes in dates and locations.

D. Nature of Hearing

This will be a formal adjudicative hearing pursuant to section 648 et seq. of title 23 of the California Code of Regulations. Chapter 5 of the California Administrative Procedure Act (commencing with section 11500 of the Government Code) will not apply to this proceeding.

Ex Parte Communications Prohibited: As a quasi-adjudicative proceeding, no board member may discuss the subject of this hearing with any person, except during the public hearing itself. Any communications to the Regional Board must be directed to staff.

E. Parties to the Hearing

The following are the parties to this proceeding:
~~a.~~1. The applicant/permittee
~~b.~~2. Regional Board Staff

Any other persons requesting party status must submit a written or electronic request to staff not later than [20] business days before the hearing. All parties will be notified if other persons are so designated.

F. Public Comments and Submittal of Evidence

Persons wishing to comment upon or object to the tentative waste discharge requirements, or submit evidence for the Board to consider, are invited to submit them in writing to the above address. To be evaluated and responded to by staff, included in the Board's agenda folder, and fully considered by the Board, written comments must be received no later than **12:00 p.m. (Noon) on May 5, 2008**. Written comments regarding the revised tentative Order must be received at the Regional Water Board offices by close of business on May 16, 2008. Written comments regarding the underlined/strikeout changes made to the revised tentative dated August 12, 2008, must be received no later than 12:00 p.m. (Noon) on August 26, 2008.

Comments or evidence received after that date will be submitted, ex agenda, to the Board for consideration, but only included in administrative record with express approval of the Chair during the hearing. Additionally, if the Board receives only supportive comments, the permit may be placed on the Board's consent calendar, and approved without an oral testimony. Additional comments are not being solicited, as the comment period has ended.

G. Hearing Procedure

The meeting, in which the hearing will be a part of, will start at 9:00 a.m. Interested persons are invited to attend. Staff will present the matter under consideration, after which oral statements from parties or interested persons will be heard. For accuracy of the record, all important testimony should be in writing. The Board will include in the administrative record written transcriptions of oral testimony that is actually presented at the hearing. Oral testimony may be limited to 30 minutes maximum or less for each speaker, depending on the number of persons wishing to be heard. Parties or persons with similar concerns or opinions are encouraged to choose one representative to speak. At the conclusion of testimony, the Board will deliberate in open or close session, and render a decision.

Parties or persons with special procedural requests should contact staff. Any procedure not specified in this hearing notice will be waived pursuant to section 648(d) of title 23 of the California Code of Regulations. Objections to any procedure to be used during this

hearing must be submitted in writing not later than close of [15] business days prior to the date of the hearing. Procedural objections will not be entertained at the hearing.

If there should not be a quorum on the scheduled date of this meeting, all cases will be automatically continued to the next scheduled meeting on October 2, 2008. A continuance will not extend any time set forth herein.

H. Waste Discharge Requirements Petitions

Any aggrieved person may petition the State Water Resources Control Board to review the decision of the Regional Water Board regarding the final WDRs. The petition must be submitted within 30 days of the Regional Water Board's action to the following address:

State Water Resources Control Board
Office of Chief Counsel
P.O. Box 100, 1001 I Street
Sacramento, CA 95812-0100

I. Information and Copying

The Report of Waste Discharge (ROWD), related documents, tentative effluent limitations and special provisions, comments received, and other information are on file and may be inspected at the address above at any time between 8:30 a.m. and 4:45 p.m., Monday through Friday. Copying of documents may be arranged through the Regional Water Board by calling (213) 576-6600.

J. Register of Interested Persons

Any person interested in being placed on the mailing list for information regarding the WDRs and NPDES permit should contact the Regional Water Board, reference this facility, and provide a name, address, and phone number.

K. Additional Information

Requests for additional information or questions regarding this order should be directed to Raul Medina at (213) 620-2160.