CALIFORNIA REGIONAL WATER QUALITY CONTROL BOARD

LOS ANGELES REGION

320 W. 4th Street, Suite 200, Los Angeles, California 90013
Phone (213) 576 - 6600 • Fax (213) 576 - 6640
http://www.waterboards.ca.gov

ORDER NO. R4-2011-0165-X
NPDES NO. CA0061191

AMENDMENT TO THE WASTE DISCHARGE REQUIREMENTS FOR SOUTHERN CALIFORNIA EDISON COMPANY PEBBLY BEACH DESALINATION PLANT

The following Discharger is subject to waste discharge requirements as set forth in this Order:

Table 1. Discharger Information

Discharger	Southern California Edison Company
Name of Facility	Pebbly Beach Desalination Plant
Facility Address	1 Pebbly Beach Road
	Avalon, CA 90704
	Los Angeles County
The U.S. Environmental Protection Agency (USEPA) and the Regional Water Quality Control Board have classified this discharge as a minor discharge.	

The discharge by Southern California Edison Company from the discharge points identified below is subject to waste discharge requirements as set forth in this Order:

Table 2. Discharge Location

Discharge Point	Effluent Description	Discharge Point Latitude	Discharge Point Longitude	Receiving Water
001	Reverse Osmosis Brine, Filter Backwash, Untreated Seawater , and Wastewater from Flushing the Seawater Supply Pipeline	33° 20’ 01.9” N	118° 18’ 34.7’’ W	Pacific Ocean

TENTATIVE

Table 3. Administrative Information

This Order was adopted by the Regional Water Quality Control Board on:	**October 9, 2014**
This Order shall become effective on:	**December 1, 2014**
This Order shall expire on:	**September 10, 2016**
The Discharger shall file a Report of Waste Discharge in accordance with title 23, California Code of Regulations, as application for issuance of new waste discharge requirements no later than:	**180 days prior to the Order expiration date**

IT IS HEREBY ORDERED, that this Order supersedes Order No. R4-2011-0165 adopted by this Regional Water Board on October 6, 2011, and, in order to meet the provisions contained in division 7 of the Water Code (commencing with section 13000) and regulations adopted pursuant thereto, and the provisions of the federal Clean Water Act (CWA), and regulations and guidelines adopted pursuant thereto, the Discharger shall comply with the requirements in this Order.

I, Samuel Unger, Executive Officer, do hereby certify that this Order with all attachments is a full, true, and correct copy of an Order adopted by the California Regional Water Quality Control Board, Los Angeles Region, on October 9, 2014.

_____
Samuel Unger, P.E.,
Executive Officer

TENTATIVE

Table of Contents

I. Facility Information 5
II. Findings 6
III. Discharge Prohibitions 11
IV. Effluent Limitations and Discharge Specifications 12
  A. Effluent Limitations – Discharge Point 001 12
  B. Land Discharge Specifications – Not Applicable 14
  C. Reclamation Specifications – Not Applicable 14
V. Receiving Water Limitations 14
  A. Bacterial Characteristics 14
  B. Physical Characteristics 16
  C. Chemical Characteristics 16
  D. Biological Characteristics 16
  E. Radioactivity 17
VI. Provisions 17
  A. Standard Provisions 17
  B. Monitoring and Reporting Program (MRP) Requirements 20
  C. Special Provisions 20
VII. Compliance Determination 22

List of Tables

Table 1. Discharger Information 1
Table 2. Discharge Location 1
Table 3. Administrative Information 2
Table 4. Facility Information 5
Table 5. Basin Plan Beneficial Uses 9
Table 6. Ocean Plan Beneficial Uses of the Pacific Ocean 9
Table 7. Effluent Limitations 12

TENTATIVE

List of Attachments

Attachment A – Definitions A-1
Attachment B – Map B-1
Attachment C – Flow Schematic C-1
Attachment D – Standard Provisions D-1
Attachment E – Monitoring and Reporting Program (MRP No. 6899) E-1
Attachment F – Fact Sheet F-1
Attachment G – State Water Board Minimum Levels In The California Ocean Plan G-1
Attachment H – List of Priority Pollutants H-1

TENTATIVE

I. FACILITY INFORMATION

The following Discharger is subject to waste discharge requirements as set forth in this Order:

Table 4. Facility Information

Discharger	Southern California Edison Company
Name of Facility	Pebbly Beach Desalination Plant
Facility Address	1 Pebbly Beach Road
	Avalon, CA 90704
	Los Angeles County
Facility Contact, Title, and Phone	Ronald Hite, Catalina District Manager, (310) 510 – 4315
Mailing Address	2244 Walnut Grove Avenue, 3rd Floor Rosemead, CA 91770
Type of Facility	Desalination Plant
Facility Design Flow	0.720 million gallons per day (MGD) - reverse osmosis brine, filter backwash water, untreated seawater, and wastewater from flushing the seawater supply pipeline to control biofilm growth

TENTATIVE

II. FINDINGS

The California Regional Water Quality Control Board, Los Angeles Region (hereinafter Regional Water Board), finds:

A. Background. Southern California Edison Company (hereinafter SCE or Discharger), is currently discharging pursuant to Order No. R4-2006-0068 and National Pollutant Discharge Elimination System (NPDES) Permit No. CA0061191. The Southern California Edison facility (hereinafter Facility) in Avalon is owned and operated by Southern California Edison Company. The Discharger submitted a Report of Waste Discharge, dated January 28, 2011, and applied for an NPDES permit renewal to discharge up to 0.720 million gallons per day (MGD) of reverse osmosis brine, filter backwash water, untreated seawater, and wastewater from flushing the seawater supply pipelines from the Facility. Supplemental information was received on June 9, 2011.

AMENDMENT TO THE WDRs AND NPDES PERMIT

Recently, Regional Water Board staff discovered an error in Order No. R4-2011-0165. Order No. R4-2011-0165 included mass-based (pounds per day - lbs/day) effluent limitations for biochemical oxygen demand 5-day @ 20°C (BOD) (Average Monthly – 12.01; Maximum Daily – 36.03), total suspended solids (TSS) (Average Monthly – 30.02; Maximum Daily – 90.07), and oil and grease (Average Monthly – 6.01; Maximum Daily – 9.01), which were inadvertently miscalculated. The lbs/day effluent limitations were recalculated and the limits should have been the following: BOD (Average Monthly – 120.1; Maximum Daily – 360.3); TSS (Average Monthly – 300.2; Maximum Daily – 900.7), and oil and grease (Average Monthly – 60.1; Maximum Daily – 90.1). Therefore, this Order amends Order No. R4-2011-0165 to correct the mass-based effluent limitations for BOD, TSS, and oil and grease, and incorporate the applicable updates to the permit. This action is in accordance with 40 Code of Federal Regulations (CFR) 122.62(a)(15) which states that:

> "(15) To correct technical mistakes, such as errors in calculation, or mistaken interpretations of law made in determining permit conditions."

For the purposes of this Order, references to the "discharger" or "permittee" in applicable federal and state laws, regulations, plans, or policy are held to be equivalent to references to the Discharger herein.

B. Facility Description. The Discharger operates electric, gas, and water systems in Santa Catalina Island. As part of the water system, the Discharger operates a desalination plant to provide drinking water to residents. Operations at the desalination plant result in discharges of up to 0.720 MGD of reverse osmosis brine, filter backwash, untreated seawater, and wastewater from flushing the seawater supply pipeline to control biofilm growth.

TENTATIVE

SCE constructed the Pebbly Beach Desalination Plant (Plant) in the late 1980s to augment the fresh water supply on Santa Catalina Island for the City of Avalon during an extended period of drought. The plant is located within the confines of one of SCE's existing diesel-electric generating station facilities (Pebbly Beach Generating Station) on Pebbly Beach Road, Santa Catalina Island, Los Angeles County. Seawater is pumped from two separate wells at the rock quarry, approximately one mile southeast of the desalination plant. The desalination system consist of two saltwater supply wells, 16 microfiltration units, four modular reverse osmosis units, chlorination equipment, and a product water storage tank which also serves as a chlorine contact chamber. Any freshwater produced that is not immediately used is stored in a storage tank.

The Discharger requested that the Regional Water Board allow periodic flushing of the seawater supply pipelines that connect supply wells to the desalination plant to control the presence of biofilm that is attached to and grows on the inner surface of the pipeline. The Discharger indicated that this activity will not cause an increase in discharge flow rates and has not requested an increase in permitted flow rates. This Order allows periodic flushing of the seawater supply pipelines to control biofilm growth.

Reverse osmosis brine, filter backwash, untreated seawater, and wastewater from flushing the seawater supply pipelines is discharged from Discharge Point 001 (see table on cover page) through a rip rap slope to the Pacific Ocean, a water of the United States. Attachment B provides a map of the area around the Facility. Attachment C provides a flow schematic of the Facility.

C. Legal Authorities. This Order is issued pursuant to section 402 of the federal Clean Water Act (CWA) and implementing regulations adopted by the U.S. Environmental Protection Agency (USEPA) and chapter 5.5, division 7 of the California Water Code (commencing with section 13370). It shall serve as an NPDES permit for point source discharges from this facility to surface waters. This Order also serves as Waste Discharge Requirements (WDRs) pursuant to article 4, chapter 4, division 7 of the Water Code (commencing with section 13260).

D. Background and Rationale for Requirements. The Regional Water Board developed the requirements in this Order based on information submitted as part of the application, through monitoring and reporting programs, and other available information. The Fact Sheet (Attachment F), which contains background information and rationale for Order requirements, is hereby incorporated into this Order and constitutes part of the Findings. Attachments A through E and G through I are also incorporated into this Order.

E. California Environmental Quality Act (CEQA). Under Water Code section 13389, this action to adopt an NPDES permit is exempt from the provisions of CEQA, Public Resources Code sections 21100-21177.

F. Technology-based Effluent Limitations. Section 301(b) of the CWA and implementing USEPA permit regulations at part 122.44, title 40 of the Code of Federal

TENTATIVE

Regulations[1] (CFR), require that permits include conditions meeting applicable technology-based requirements at a minimum, and any more stringent effluent limitations necessary to meet applicable water quality standards. The discharge authorized by this Order must meet minimum federal technology-based requirements based on Best Professional Judgment (BPJ) in accordance with 40 CFR part 125.3. A detailed discussion of the technology-based effluent limitations development is included in the Fact Sheet (Attachment F).

G. Water Quality-Based Effluent Limitations. Section 301(b) of the CWA and part 122.44(d) require that permits include limitations more stringent than applicable federal technology-based requirements where necessary to achieve applicable water quality standards.

40 CFR part 122.44(d)(1)(i) mandates that permits include effluent limitations for all pollutants that are or may be discharged at levels that have the reasonable potential to cause or contribute to an exceedance of a water quality standard, including numeric and narrative objectives within a standard. Where reasonable potential has been established for a pollutant, but there is no numeric criterion or objective for the pollutant, water quality-based effluent limitations (WQBELs) must be established using: (1) USEPA criteria guidance under CWA section 304(a), supplemented where necessary by other relevant information; (2) an indicator parameter for the pollutant of concern; or (3) a calculated numeric water quality criterion, such as a proposed state criterion or policy interpreting the state's narrative criterion, supplemented with other relevant information, as provided in part 122.44(d)(1)(vi).

The Regional Water Board received a memorandum dated May 18, 2001, that includes an analysis of dilution for discharges from Pebbly Beach Desalination Plant conducted by the State Water Resources Control Board (State Water Board). The State Water Board found that rapid initial dilution is occurring at the point of discharge. The State Water Board and Regional Water Board, based on the data provided by SCE, concluded that a dilution factor of five is applicable for this discharge. The mixing zone is defined as the water column immediately adjacent to and within the rip-rap seawall where initial mixing occurs. Immediately adjacent is defined as the portion of ocean waters extending approximately 3 feet from the shoreline. The dilution factor is applied to all WQBELs contained in the Order. The dilution analysis is discussed in the Fact Sheet, Attachment F.

H. Water Quality Control Plan. On June 13, 1994, the Regional Water Board adopted a water quality control plan for the Los Angeles Region (hereinafter Basin Plan), as amended, that designates beneficial uses, establishes water quality objectives, and contains implementation programs and policies to achieve those objectives for the Pacific Ocean. In addition, the Basin Plan implements State Water Resources Control Board (State Water Board) Resolution No. 88-63, which established State policy that all waters, with certain exceptions, should be considered suitable or potentially suitable for

TENTATIVE

[1] All further statutory references are to title 40 of the Code of Federal Regulations unless otherwise indicated.

municipal or domestic supply. Basin Plan beneficial uses applicable to the Pacific Ocean are shown in Table 5:

Table 5. Basin Plan Beneficial Uses

Discharge Point	Receiving Water Name	Beneficial Use(s)
001	Pacific Ocean Nearshore Zone	Industrial Service Supply; Navigation; Water Contact Recreation: Non-Contact Water Recreation; Commercial and Sport Fishing; Marine Habitat; Wild Habitat; Preservation of Biological Habitat; Rare and Endangered Species; Migration of Aquatic Organisms; Spawning, Reproduction, and/or Early Development; and Shellfish Harvesting.

Requirements of this Order/Permit implement the Basin Plan.

I. California Thermal Plan. In 1972, the State Water Board adopted the *Water Quality Control Plan for Control of Temperature in the Coastal and Interstate Water and Enclosed Bays and Estuaries of California* (hereinafter Thermal Plan), as amended. This plan contains temperature objectives for coastal and inland surface waters. Requirements of this Order/Permit implement the Thermal Plan.

J. California Ocean Plan. In 1972, the State Water Board adopted the *Water Quality Control Plan for Ocean Waters of California, California Ocean Plan* (hereinafter Ocean Plan), as amended. The latest amendment became effective on March 10, 2010. The Ocean Plan is applicable, in its entirety, to point source discharges to the ocean waters of the State. Ocean Plan beneficial uses applicable to ocean waters of the State are shown in Table 5.

Table 6. Ocean Plan Beneficial Uses of the Pacific Ocean

Discharge Point	Receiving Water Name	Beneficial Use(s)
001	Pacific Ocean	Industrial Water Supply; Contact and Non-Contact Water Recreation, including Aesthetic Enjoyment; Navigation; Commercial and Sport Fishing; Mariculture; Preservation and Enhancement of Designated Areas of Special Biological Significance (ASBS); Rare and Endangered Species; Marine Habitat; Fish Migration; Fish Spawning and Shellfish Harvesting.

To protect the beneficial uses in ocean water, the Ocean Plan establishes water quality objectives and an implementation program. Requirements of this Order/Permit implement the requirements in the Ocean Plan.

K. Alaska Rule. On March 30, 2000, USEPA revised its regulation that specifies when new and revised state and tribal water quality standards (WQS) become effective for CWA purposes. (40 C.F.R. § 131.21; 65 Fed. Reg. 24641 (April 27, 2000).) Under the revised regulation (also known as the Alaska rule), new and revised standards submitted to USEPA after May 30, 2000, must be approved by USEPA before being used for CWA purposes. The final rule also provides that standards already in effect

TENTATIVE

and submitted to USEPA by May 30, 2000 may be used for CWA purposes, whether or not approved by USEPA.

L. Stringency of Requirements for Individual Pollutants. This Order contains both technology-based and water quality-based effluent limitations for individual pollutants. The technology-based effluent limitations consist of restrictions on pH, 5-day biochemical oxygen demand at 20°C (BOD_5 20°C), total suspended solids (TSS), oil and grease, settleable solids, and turbidity. Restrictions on pH, BOD_5, TSS, oil and grease, settleable solids, and turbidity are discussed in Section IV.B of the Fact Sheet (Attachment F). This Order's technology-based pollutant restrictions implement the minimum, applicable federal technology-based requirements.

M. Antidegradation Policy. 40 CFR part 131.12 requires that the state water quality standards include an antidegradation policy consistent with the federal antidegradation policy. The State Water Board established California's antidegradation policy in State Water Board Resolution No. 68-16. Resolution No. 68-16 incorporates the federal antidegradation policy where the federal policy applies under federal law. Resolution No. 68-16 requires that existing quality of waters be maintained unless degradation is justified based on specific findings. The Regional Water Board's Basin Plan implements, and incorporates by reference, both the state and federal antidegradation policies. As discussed in detail in the Fact Sheet the permitted discharge is consistent with the antidegradation provision of part 131.12 and State Water Board Resolution No. 68-16.

N. Anti-Backsliding Requirements. Sections 402(o)(2) and 303(d)(4) of the CWA and federal regulations at title 40, Code of Federal Regulations part 122.44(l) prohibit backsliding in NPDES permits. These anti-backsliding provisions require effluent limitations in a reissued permit to be as stringent as those in the previous permit, with some exceptions where limitations may be relaxed. Some effluent limitations in this Order are less stringent than those in the previous Order. As discussed in detail in the Fact Sheet the relaxation of effluent limitations in this Order is consistent with the exceptions to the anti-backsliding requirements of the CWA and federal regulations.

In conformance with reasonable potential analysis (RPA) procedures in Appendix VI of the California Ocean Plan (2009), effluent limitations for some constituents are not carried forward in this Order because there is not presently reasonable potential for the constituents to cause or contribute to an exceedance of water quality standards. Without reasonable potential, there is no longer a need to maintain prior WQBELs under NPDES regulations, antibacksliding provisions, and antidegradation policies. The accompanying monitoring and reporting program requires continued data collection and if monitoring data show reasonable potential for a constituent to cause or contribute to an exceedance of water quality standards, the Order will be reopened to incorporate WQBELs. Such an approach ensures that the discharge will adequately protect designated beneficial uses and conform with antidegradation policies and antibacksliding provisions.

O. Endangered Species Act. This Order does not authorize any act that results in the taking of a threatened or endangered species or any act that is now prohibited, or

TENTATIVE

becomes prohibited in the future, under either the California Endangered Species Act (Fish and Game Code sections 2050 to 2097) or the Federal Endangered Species Act (16 U.S.C. sections 1531 to 1544). This Order requires compliance with effluent limits, receiving water limits, and other requirements to protect the beneficial uses of waters of the state. The Discharger is responsible for meeting all requirements of the applicable Endangered Species Act.

P. Monitoring and Reporting. 40 CFR part 122.48 requires that all NPDES permits specify requirements for recording and reporting monitoring results. Water Code sections 13267 and 13383 authorizes the Regional Water Board to require technical and monitoring reports. The Monitoring and Reporting Program establishes monitoring and reporting requirements to implement federal and State requirements. This Monitoring and Reporting Program is provided in Attachment E.

Q. Standard and Special Provisions. Standard Provisions, which apply to all NPDES permits in accordance with part 122.41, and additional conditions applicable to specified categories of permits in accordance with part 122.42, are provided in Attachment D. The Discharger must comply with all standard provisions and with those additional conditions that are applicable under part 122.42. The Regional Water Board has also included in this Order special provisions applicable to the Discharger. A rationale for the special provisions contained in this Order is provided in the attached Fact Sheet.

R. Notification of Interested Parties. The Regional Water Board has notified the Discharger and interested agencies and persons of its intent to prescribe Waste Discharge Requirements for the discharge and has provided them with an opportunity to submit their written comments and recommendations. Details of notification are provided in the Fact Sheet of this Order.

S. Consideration of Public Comment. The Regional Water Board, in a public meeting, heard and considered all comments pertaining to the discharge. Details of the Public Hearing are provided in the Fact Sheet of this Order.

THEREFORE, IT IS HEREBY ORDERED, that this Order supersedes Order No. R4-2006-0068 and Order No. R4-2011-0165 except for enforcement purposes, and, in order to meet the provisions contained in division 7 of the Water Code (commencing with section 13000) and regulations adopted thereunder, and the provisions of the federal Clean Water Act (CWA) and regulations and guidelines adopted thereunder, the Discharger is authorized to discharge from the identified facility and outfall into waters of the United States and shall comply with the requirements in this Order. This action in no way prevents the Regional Water Board from taking enforcement action for past violations of the previous Orders.

TENTATIVE

III. DISCHARGE PROHIBITIONS

1. Wastes discharged shall be limited to a maximum of 0.720 MGD of reverse osmosis brine, filter backwash water, untreated seawater, and wastewater from flushing the seawater supply pipelines through Discharge Point 001. The discharge of wastes from accidental spills or other sources is prohibited.

2. Discharges of water, materials, thermal wastes, elevated temperature wastes, toxic wastes, deleterious substances, or wastes other than those authorized by this Order, to a storm drain system, Pacific Ocean, or other waters of the State, are prohibited.

3. Neither the treatment nor the discharge of pollutants shall create pollution, contamination, or a nuisance as defined by Section 13050 of the Water Code.

4. Wastes discharged shall not contain any substances in concentrations toxic to human, animal, plant, or aquatic life.

5. The discharge shall not cause a violation of any applicable water quality standards for receiving waters adopted by the Regional Water Board or the State Water Resources Control Board as required by the Federal CWA and regulations adopted thereunder. If more stringent applicable water quality standards are promulgated or approved pursuant to section 303 of the Federal CWA, and amendments thereto, the Board will revise and modify this Order in accordance with such more stringent standards.

6. The discharge of any radiological, chemical, or biological warfare agent or high level radiological waste is prohibited.

7. Any discharge of wastes at any point(s) other than specifically described in this Order is prohibited, and constitutes a violation of the Order.

8. Waste shall not be discharged to designated Areas of Special Biological Significance.

TENTATIVE

IV. EFFLUENT LIMITATIONS AND DISCHARGE SPECIFICATIONS

A. Effluent Limitations – Discharge Point 001

1. Final Effluent Limitations – Monitoring Location EFF-001

a. The Discharger shall maintain compliance with the following effluent limitations at Discharge Point 001, with compliance measured at Monitoring Location EFF-001, as described in the attached MRP (Attachment E):

Table 7. Effluent Limitations

Parameter	Units[1]	Effluent Limitations					
		6-Month Median[2]	Average Monthly	7-Day Average	Maximum Daily[3]	Instantaneous Minimum	Instantaneous Maximum[4]
pH	S.U.	—	—	—	—	6.0	9.0
Biochemical Oxygen Demand 5-day (BOD_5) @ 20°C[2]	mg/L	—	20	—	60	—	—
	Lbs/day	--	120.1		360.3	—	—
Total Suspended Solids (TSS) [5]	mg/L	—	50	—	150	—	—
	Lbs/day	--	300.2	—	900.7	—	—

Parameter	Units[1]	Effluent Limitations					
		6-Month Median[2]	Average Monthly	7-Day Average	Maximum Daily[3]	Instantaneous Minimum	Instantaneous Maximum[4]
Oil and Grease[5]	mg/L	—	10	—	15	—	—
	Lbs/day	---	60.1	—	90.1	—	—
Settleable Solids[5]	mL/L	—	0.1	—	0.3	—	—
Turbidity[5]	NTU	—	50	100	150	—	—
Copper, Total Recoverable[5,6]	µg/L	8	—	—	62	—	170
	Lbs/day	0.048	—	—	0.37	—	1.02
Zinc, Total Recoverable[5,6]	µg/L	80	—	—	440	—	1,160
	Lbs/day	0.48		—	2.64	—	6.97
Bis(2-ethylhexyl) Phthalate[5,6]	µg/L	—	21	—	—	—	—
	Lbs/day	---	0.13	—	—	—	—
Tributyltin[6]	µg/L	—	0.0084	—	—	—	—
	Lbs/day	—	5.04E-05	—	—	—	—
Total coliform [7]	MPN/100ml	---	---	---	---	---	---
Fecal coliform [7]	MPN/100ml	---	---	---	---	---	---
Enterococcus [7]	MPN/100ml	---	---	---	---	---	---

[1] The mass emission rates (lbs/day) are based on the flow rate of 0.720 million gallons per day (mgd), using the formula:

$$m = 0.00834 \times Ce \times Q$$

where: m = mass discharge for a pollutant, lbs/day
Ce = limitation concentration for a pollutant, µg/L
Q = flow rate, mgd

[2] Six-month median shall apply as a moving median of daily values for any 180-day period (in which the daily values represent flow weighted average concentrations within a 24-hour period.

[3] Daily maximum shall apply to flow weighted 24-hour composite samples.

[4] Instantaneous maximum shall apply to any grab sample determination.

[5] The effluent limitations are based on the Existing Permit.

[6] Effluent limitations for these constituents are based on Ocean Plan objectives using initial dilution ratios of 5 parts of seawater to 1 part effluent (5:1).

[7] <u>Bacterial Limitations:</u>

(a) 30-day Geometric Mean Limits – The geometric mean shall be calculated using the five most recent samples results:
(1) Total coliform density shall not exceed 1,000 per 100 ml;
(2) Fecal coliform density shall not exceed 200 per 100 ml; and
(3) Enterococcus density shall not exceed 35 per 100 ml.

(b) Single Sample Maximum:

(1) Total coliforrm density shall not 10,000 per 100 ml;
(2) Fecal coliform density shall not exceed 400 per 100 ml;
(3) Enterococcus density shall not exceed 104 per 100 ml; and
(4) The total coliform density shall not exceed 1,000 per 100 ml when the fecal coliform/total coliform ratio exceeds 0.1.

TENTATIVE

If a single sample exceeds any of the single sample maximum (SSM) standards, repeat sampling shall be conducted to determine the extent and persistent of the exceedance. Repeat sampling shall be conducted within 24 hours of receiving analytical results and continued until the sample result is less than the SSM standard.

When repeat sampling is required because of an exceedance of any one single sample density, values from all samples collected during that 30-day period will be used to calculate the geometric mean.

2. The temperature of wastes discharged shall not exceed 100°F

3. Interim Effluent Limitations – Not Applicable

B. Land Discharge Specifications – Not Applicable

C. Reclamation Specifications – Not Applicable

V. RECEIVING WATER LIMITATIONS

Unless specifically excepted by this Order, the discharge, by itself or jointly with any other discharge(s), shall not cause violation of the following water quality objectives. Compliance with these objectives shall be determined by samples collected at stations representative of the area within the waste field where initial dilution is completed.

A. Bacterial Characteristics

1. State/Regional Water Boards Water Contact Standards

Within a zone bounded by the shoreline and a distance of 1,000 feet from the shoreline or the 30-foot depth contour, whichever is further from the shoreline, and in areas outside this zone used for water contact sports, as determined by the Regional Water Board (i.e., waters designated as REC-1), but including all kelp beds, the following bacterial objectives shall be maintained throughout the water column.

30-day Geometric Mean Limit

a. Total coliform density shall not exceed 1,000/100 ml.

b. Fecal coliform density shall not exceed 200/100 ml.

c. *Enterococcus* density shall not exceed 35/100 ml.

Single Sample Maximum Limits (SSM)

a. Total coliform density shall not exceed 10,000/100 ml.

b. Fecal coliform density shall not exceed 400/100 ml.

c. *Enterococcus* density shall not exceed 104/100 ml.

TENTATIVE

d. Total coliform density shall not exceed 1,000/100 ml, when the fecal coliform/total coliform ratio exceeds 0.1.

If any of the single sample limits are exceeded, the Regional Water Board may require repeat sampling on a daily basis until the sample falls below the single sample limit in order to determine the persistence of the exceedance. When repeat sampling is required because of an exceedance of any single sample limit, values from all samples collected during that 30-day period will be used to calculate the geometric mean.

2. Zone of Initial Dilution

The Initial Dilution Zone for any wastewater outfall shall be excluded from designation as kelp beds for purposes of bacterial standards. Adventitious assemblages of kelp plants on waste discharge structures (e.g., outfall pipes and diffusers) do not constitute kelp beds for purposes of bacterial standards.

3. California Department of Public Health[2] (CDPH) Standards

California Department of Public Health (CDPH) has established minimum protective bacteriological standards for coastal waters adjacent to public beaches and for public water-contact sports areas in ocean waters. These standards are found in the California Code of Regulations, title 17, section 7958, and they are identical to the objectives contained in subsection 1, above. When a public beach or public water-contact sports area fails to meet these standards, CDPH or the local public health officer may post with warning signs or otherwise restrict use of the public beach or public water-contact sports area until the standards are met. The CDPH regulations impose more frequent monitoring and more stringent posting and closure requirements on certain high-use public beaches that are located adjacent to a storm drain that flows in the summer.

For beaches not covered under AB 411 regulations (this incorporation by reference is prospective including future changes to the incorporated provisions as changes take effect), CDPH imposes the same standards as contained in title 17, California Code of Regulations, and requires weekly sampling but allows the county health officer more discretion in making posting and closure decisions.

4. Shellfish Harvesting Standards.

At all areas where shellfish may be harvested for human consumption, as determined by the Regional Water Board, the following bacterial objectives shall be maintained throughout the water column:

a. The median total coliform density shall not exceed 70 per 100 ml, and not more than 10 percent of the samples shall exceed 230 per 100 ml.

TENTATIVE

[2] Formerly, California Department of Health Services.

B. Physical Characteristics

The waste discharged shall not:

1. Cause floating particulates, and oil and grease to be visible.

2. Cause aesthetically undesirable discoloration of the ocean surface.

3. Significantly reduce the transmittance of natural light at any point outside the initial dilution zone; and

4. Change the rate of deposition of inert solids and the characteristics of inert solids in ocean sediments such that benthic communities are degraded.

C. Chemical Characteristics

The waste discharged shall not:

1. Cause the dissolved oxygen concentration at any time to be depressed more than 10 percent from that which occurs naturally, as the result of the discharge of oxygen demanding waste materials.

2. Change the pH at any time more than 0.2 units from that which occurs naturally.

3. Cause the dissolved sulfide concentration of waters in and near sediments to be increased above that present under natural conditions.

4. Cause the concentration of substances set forth in Chapter II, Table B of the Ocean Plan, in marine sediments to be increased to levels that would degrade indigenous biota.

5. Cause the concentration of organic materials in marine sediments to be increased to levels that would degrade marine life.

6. Contain nutrients at levels that will cause objectionable aquatic growths or degrade indigenous biota.

7. Numerical Water Quality Objectives

a. The water quality objectives established in Chapter II, Table B of the California Ocean Plan apply to all discharges within the jurisdiction of the this Plan. Unless otherwise specified, all metal concentrations are expressed as total recoverable concentrations.

D. Biological Characteristics

1. Marine communities, including vertebrate, invertebrate, and plant species, shall not be degraded.

TENTATIVE

2. The natural taste, odor, and color of fish, shellfish, or other marine resources used for human consumption shall not be altered.

3. The concentration of organic materials in fish, shellfish, or other marine resources used for human consumption shall not bioaccumulate to levels that are harmful to human health.

E. Radioactivity

Discharge of radioactive waste shall not degrade marine life.

VI. PROVISIONS

A. Standard Provisions

1. Federal Standard Provisions. The Discharger shall comply with all Standard Provisions included in Attachment D of this Order.

2. Regional Water Board Standard Provisions. The Discharger shall comply with the following provisions:

a. This Order may be modified, revoked, reissued, or terminated in accordance with the provisions of sections 122.44, 122.62, 122.63, 122.64, 125.62 and 125.64. Causes for taking such actions include, but are not limited to: failure to comply with any condition of this Order; endangerment to human health or the environment resulting from the permitted activity; or acquisition of newly-obtained information which would have justified the application of different conditions if known at the time of Order adoption. The filing of a request by the Discharger for an Order modification, revocation, and issuance or termination, or a notification of planned changes or anticipated noncompliance does not stay any condition of this Order.

b. The Discharger must comply with the lawful requirements of municipalities, counties, drainage districts, and other local agencies regarding discharges of storm water to storm drain systems or other water courses under their jurisdiction; including applicable requirements in municipal storm water management program developed to comply with NPDES permits issued by the Regional Water Board to local agencies.

c. Discharge of wastes to any point other than specifically described in this Order and permit is prohibited and constitutes a violation thereof.

d. The Discharger shall comply with all applicable effluent limitations, national standards of performance, toxic effluent standards, and all federal regulations established pursuant to sections 301, 302, 303(d), 304, 306, 307, 316, 318, 405, and 423 of the Federal CWA and amendments thereto.

TENTATIVE

e. These requirements do not exempt the operator of the waste disposal facility from compliance with any other laws, regulations, or ordinances which may be applicable; they do not legalize this waste disposal facility, and they leave unaffected any further restraints on the disposal of wastes at this site which may be contained in other statutes or required by other agencies.

f. Oil or oily material, chemicals, refuse, or other pollutionable materials shall not be stored or deposited in areas where they may be picked up by rainfall and carried off of the property and/or discharged to surface waters. Any such spill of such materials shall be contained and removed immediately.

g. A copy of these waste discharge specifications shall be maintained at the discharge facility. They are to be available at all times to operating personnel.

h. After notice and opportunity for a hearing, this Order may be terminated or modified for cause, including, but not limited to:

i. Violation of any term or condition contained in this Order;

ii. Obtaining this Order by misrepresentation, or failure to disclose all relevant facts;

iii. A change in any condition that requires either a temporary or permanent reduction or elimination of the authorized discharge.

i. If there is any storage of hazardous or toxic materials or hydrocarbons at this facility and if the facility is not manned at all times, a 24-hour emergency response telephone number shall be prominently posted where it can easily be read from the outside.

j. The Discharger shall notify the Regional Water Board not later than 120 days in advance of implementation of any plans to alter production capacity of the product line of the manufacturing, producing or processing facility by more than ten percent. Such notification shall include estimates of proposed production rate, the type of process, and projected effects on effluent quality. Notification shall include submittal of a new report of waste discharge appropriate filing fee.

k. The Discharger shall file with the Regional Water Board a report of waste discharge at least 120 days before making any material change or proposed change in the character, location or volume of the discharge.

l. All existing manufacturing, commercial, mining, and silvicultural dischargers must notify the Regional Water Board as soon as they know or have reason to believe that they have begun or expect to begin to use or manufacture intermediate or final product or byproduct of any toxic pollutant that was not reported on their application.

TENTATIVE

m. In the event of any change in name, ownership, or control of these waste disposal facilities, the discharger shall notify this Regional Water Board of such change and shall notify the succeeding owner or operator of the existence of this Order by letter, copy of which shall be forwarded to the Regional Water Board.

n. The Water Code provides that any person who violates a waste discharge requirement or a provision of the Water Code is subject to civil penalties of up to $5,000 per day, $10,000 per day, or $25,000 per day of violation, or when the violation involves the discharge of pollutants, is subject to civil penalties of up to $10 per gallon per day or $25 per gallon per day of violation; or some combination thereof, depending on the violation, or upon the combination of violations.

Violation of any of the provisions of the NPDES program or of any of the provisions of this Order may subject the violator to any of the penalties described herein, or any combination thereof, at the discretion of the prosecuting authority; except that only one kind of penalty may be applied for each kind of violation.

o. The discharge of any product registered under the Federal Insecticide, Fungicide, and Rodenticide Act to any waste stream which may ultimately be released to waters of the United States, is prohibited unless specifically authorized elsewhere in this permit or another NPDES permit. This requirement is not applicable to products used for lawn and agricultural purposes.

p. The discharge of any waste resulting from the combustion of toxic or hazardous wastes to any waste stream that ultimately discharges to waters of the United States is prohibited, unless specifically authorized elsewhere in this permit.

q. The Discharger shall notify the Executive Officer in writing no later than 6 months prior to the planned discharge of any chemical, other than the products previously reported to the Executive Officer, which may be toxic to aquatic life. Such notification shall include:

i. Name and general composition of the chemical,

ii. Frequency of use,

iii. Quantities to be used,

iv. Proposed discharge concentrations, and

v. USEPA registration number, if applicable.

r. Failure to comply with provisions or requirements of this Order, or violation of other applicable laws or regulations governing discharges from this facility, may

TENTATIVE

subject the Discharger to administrative or civil liabilities, criminal penalties, and/or other enforcement remedies to ensure compliance. Additionally, certain violations may subject the Discharger to civil or criminal enforcement from appropriate local, state, or federal law enforcement entities.

s. In the event the Discharger does not comply or will be unable to comply for any reason, with any prohibition, average monthly effluent limitation, maximum daily effluent limitation, instantaneous minimum effluent limitation, instantaneous maximum effluent limitation, or receiving water limitation of this Order, the Discharger shall notify the Regional Water Board by telephone (213) 576-6600 within 24 hours of having knowledge of such noncompliance, and shall confirm this notification in writing within five days, unless the Regional Water Board waives confirmation. The written notification shall state the nature, time, duration, and cause of noncompliance, and shall describe the measures being taken to remedy the current noncompliance and, prevent recurrence including, where applicable, a schedule of implementation. Other noncompliance requires written notification as above at the time of the normal monitoring report.

t. Prior to making any change in the point of discharge, place of use, or purpose of use of treated wastewater that results in a decrease of flow in any portion of a watercourse, the Discharger must file a petition with the State Water Board, Division of Water Rights, and receive approval for such a change. (Wat. Code § 1211.)

B. Monitoring and Reporting Program (MRP) Requirements

The Discharger shall comply with the MRP, and future revisions thereto, in Attachment E of this Order. If there is any conflict between provisions stated in the MRP and the Regional Water Board Standard Provisions, those provisions stated in the MRP shall prevail.

C. Special Provisions

1. Reopener Provisions

a. If more stringent applicable water quality standards are promulgated or approved pursuant to Section 303 of the Federal CWA, and amendments thereto, the Regional Water Board will revise and modify this Order in accordance with such more stringent standards.

b. This Order may be reopened to include effluent limitations for toxic constituents determined to be present in significant amounts in the discharge through a more comprehensive monitoring program included as part of this Order and based on the results of the RPA.

c. This Order may be reopened and modified, in accordance with the provisions set forth in Parts 122 and 124, to include requirements for the implementation of the watershed management approach or to include new MLs.

TENTATIVE

d. This Order may be reopened and modified to revise effluent limitations as a result of future Ocean Plan Amendments.

e. This Order may be reopened upon submission by the Discharger of adequate information, as determined by the Regional Water Board, to provide for dilution credits or a mixing zone, as may be appropriate.

f. This Order may be reopened for modification, or revocation and reissuance, as a result of the detection of a reportable priority pollutant generated by special conditions included in this Order. These special conditions may be, but are not limited to, fish tissue sampling, whole effluent toxicity, monitoring requirements on internal waste stream(s), and monitoring for surrogate parameters. Additional requirements may be included in this Order as a result of the special condition monitoring data.

2. Special Studies, Technical Reports and Additional Monitoring Requirements

a. Chronic Toxicity Trigger and Monitoring Requirements. The Order contains a chronic toxicity trigger defined as an exceedance of 6.0 TUc in a critical life stage test for 100% effluent (The daily maximum for chronic toxicity of 100% effluent shall not exceed, 6 TUc in a critical life stage test.). The Discharger shall monitor the effluent semi-annually for chronic toxicity to determine the presence of chronic toxicity. If the chronic toxicity of the effluent exceeds 6.0 TUc (defined in Section V.A of the MRP, Attachment E), the Discharger shall immediately implement accelerated chronic toxicity testing, as required in Section V of the MRP, Attachment E).

b. Initial Investigation Toxicity Reduction Evaluation (TRE) Workplan. The Discharger shall submit to the Regional Water Board an Initial Investigation Toxicity Reduction Evaluation (TRE) workplan (1-2 pages) **within 90 days** of the effective date of this permit. This plan shall describe the steps the permittee intends to follow in the event that toxicity is detected, and should include at a minimum:

i. A description of the investigation and evaluation techniques that will be used to identify potential causes/sources of toxicity, effluent variability, and treatment system efficiency;

ii. A description of the facility's method of maximizing in-house treatment efficiency and good housekeeping practices, and a list of all chemicals used in operation of the facility;

iii. If a toxicity identification evaluation (TIE) is necessary, an indication of the person who would conduct the TIEs (i.e., an in-house expert or an outside contractor) (Section V of the MRP, Attachment E, provides references for the guidance manuals that should be used for performing TIEs).

3. Construction, Operation and Maintenance Specifications – Not Applicable

4. Special Provisions for Municipal Facilities (POTWs Only) – Not Applicable

TENTATIVE

5. Other Special Provisions – Not Applicable

6. Compliance Schedules – Not Applicable

VII. COMPLIANCE DETERMINATION

Compliance with the effluent limitations contained in section IV of this Order will be determined as specified below:

A. Single Constituent Effluent Limitation.
If the concentration of the pollutant in the monitoring sample is greater than the effluent limitation and greater than or equal to the reported Minimum Level (see Reporting Requirement I.G. of the MRP), then the Discharger is out of compliance.

B. Effluent Limitations Expressed as a Sum of Several Constituents.
If the sum of the individual pollutant concentrations is greater than the effluent limitation, then the Discharger is out of compliance. In calculating the sum of the concentrations of a group of pollutants, consider constituents reported as ND or DNQ to have concentrations equal to zero, provided the applicable ML is used.

C. Multiple Sample Data.
When determining compliance with an AMEL or MDEL for priority pollutants and more than one sample result is available, the Discharger shall compute the arithmetic mean unless the data set contains one or more reported determinations of “Detected, but Not Quantified” (DNQ) or “Not Detected” (ND). In those cases, the Discharger shall compute the median in place of the arithmetic mean in accordance with the following procedure:

1. The data set shall be ranked from low to high, ranking the reported ND determinations lowest, DNQ determinations next, followed by quantified values (if any). The order of the individual ND or DNQ determinations is unimportant.

2. The median value of the data set shall be determined. If the data set has an odd number of data points, then the median is the middle value. If the data set has an even number of data points, then the median is the average of the two values around the middle unless one or both of the points are ND or DNQ, in which case the median value shall be the lower of the two data points where DNQ is lower than a value and ND is lower than DNQ.

D. Average Monthly Effluent Limitation (AMEL).
If the average (or when applicable, the median determined by subsection E above for multiple sample data) of daily discharges over a calendar month exceeds the AMEL for a given parameter, this will represent a single violation, though the Discharger will be considered out of compliance for each day of that month for that parameter (e.g., resulting in 31 days of non-compliance in a 31-day month). If only a single sample is taken during the calendar month and the analytical result for that sample exceeds the AMEL, the Discharger will be considered out of compliance for that calendar month. For any one calendar month during which no sample (daily discharge) is taken, no compliance determination can be made for that calendar month.

TENTATIVE

In determining compliance with the AMEL, the following provisions shall also apply to all constituents:

1. If the analytical result of a single sample, monitored monthly, quarterly, semiannually, or annually, does not exceed the AMEL for that constituent, the Discharger has demonstrated compliance with the AMEL for that month;

2. If the analytical result of a single sample, monitored monthly, quarterly, semiannually, or annually, exceeds the AMEL for any constituent, the Discharger shall collect four additional samples at approximately equal intervals during the month. All five analytical results shall be reported in the monitoring report for that month, or 45 days after results for the additional samples were received, whichever is later.

   When all sample results are greater than or equal to the reported Minimum Level (see Reporting Requirement I.G. of the MRP), the numerical average of the analytical results of these five samples will be used for compliance determination.

   When one or more sample results are reported as “Not-Detected (ND)” or “Detected, but Not Quantified (DNQ)” (see Reporting Requirement I.G. of the MRP), the median value of these four samples shall be used for compliance determination. If one or both of the middle values is ND or DNQ, the median shall be the lower of the two middle values.

3. In the event of noncompliance with an AMEL, the sampling frequency for that constituent shall be increased to weekly and shall continue at this level until compliance with the AMEL has been demonstrated.

4. If only one sample was obtained for the month or more than a monthly period and the result exceeds the AMEL, then the Discharger is in violation of the AMEL.

E. Maximum Daily Effluent Limitations (MDEL).

If a daily discharge exceeds the MDEL for a given parameter, an alleged violation will be flagged and the discharger will be considered out of compliance for that parameter for that 1 day only within the reporting period. For any 1 day during which no sample is taken, no compliance determination can be made for that day.

F. Instantaneous Minimum Effluent Limitation.

If the analytical result of a single grab sample is lower than the instantaneous minimum effluent limitation for a parameter, a violation will be flagged and the discharger will be considered out of compliance for that parameter for that single sample. Non-compliance for each sample will be considered separately (e.g., the results of two grab samples taken within a calendar day that both are lower than the instantaneous minimum effluent limitation would result in two instances of non-compliance with the instantaneous minimum effluent limitation).

TENTATIVE

G. Instantaneous Maximum Effluent Limitation.

If the analytical result of a single grab sample is higher than the instantaneous maximum effluent limitation for a parameter, a violation will be flagged and the discharger will be considered out of compliance for that parameter for that single sample. Non-compliance for each sample will be considered separately (e.g., the results of two grab samples taken within a calendar day that both exceed the instantaneous maximum effluent limitation would result in two instances of non-compliance with the instantaneous maximum effluent limitation).

H. Six-month Median Effluent Limitation.

If the median of daily discharges over any 180-day period exceeds the six-month median effluent limitation for a given parameter, this will represent a single violation. The next assessment of compliance will occur after the next sample is taken. If only a single sample is taken during a given 180-day period and the analytical result for that sample exceeds the six-month median, the discharger will be considered out of compliance for the 180-day period. For any 180-period during which no sample is taken, no compliance determination can be made for the six-month median limitation.

I. Mass and Concentration Limitations

Compliance with mass and concentration effluent limitations for the same parameter shall be determined separately with their respective limitations. When the concentration of a constituent in an effluent sample is determined to be ND or DNQ, the corresponding mass emission rate determined from that sample concentration shall also be reported as ND or DNQ.

J. Bacterial Standards and Analyses

The geometric mean used for determining compliance with bacterial standards is calculated using the following equation:

$$\text{Geometric Mean} = (C_1 \times C_2 \times \ldots \times C_n)^{1/n}$$

where n is the number of days samples were collected during the period and C is the concentration of bacteria (MPN/100 mL or CFU/100 mL) found on each day of sampling.

For bacterial analyses, sample dilutions should be performed so the expected range of values is bracketed (for example, with multiple tube fermentation method or membrane filtration method, 2 to 16,000 per 100 ml for total and fecal coliform, at a minimum, and 1 to 1000 per 100 ml for *Enterococcus*). The detection method used for each analysis shall be reported with the results of the analysis.

Detection methods used for coliforms (total and fecal) and *Enterococcus* shall be those presented in Table 1A of 40 CFR 136 (revised July 1, 2009), unless alternate methods have been approved by USEPA pursuant to 40 CFR 136 or improved methods have been determined by the Executive Officer and/or USEPA.

TENTATIVE

ATTACHMENT A – DEFINITIONS

AB 411 (Assembly Bill 411, Wayne)
AB 411 would require the State Department of Health Services to adopt regulations requiring the testing of all beaches for total coliform, fecal coliform, enterococci, and streptococci bacteria, establish protective minimum standards for the location of monitoring sites and monitoring frequency, to require posting in clearly visible points along affected beaches whenever state standards are violated, and to require that beaches be tested for total coliform, fecal coliform, enterococci, and streptococci bacteria and chemical pollutants including, but not limited to, PCBs, PAHs, and mercury on a weekly basis from April 1 to October 31, inclusive, of each year if certain conditions are met. AB 411 would require the local health officer to notify the Director of Parks and Recreation within 24 hours of any beach posting, closure, or restriction, and would require the Director of Parks and Recreation to establish a telephone hotline and update it daily to inform the public of beach postings, closures, and restrictions.

Arithmetic Mean (μ)
Also called the average, is the sum of measured values divided by the number of samples. For ambient water concentrations, the arithmetic mean is calculated as follows:

Arithmetic mean = $\mu = \Sigma x / n$ where: Σx is the sum of the measured ambient water concentrations, and n is the number of samples.

Average Monthly Effluent Limitation (AMEL)
The highest allowable average of daily discharges over a calendar month, calculated as the sum of all daily discharges measured during a calendar month divided by the number of daily discharges measured during that month.

Average Weekly Effluent Limitation (AWEL)
The highest allowable average of daily discharges over a calendar week (Sunday through Saturday), calculated as the sum of all daily discharges measured during a calendar week divided by the number of daily discharges measured during that week.

Best Management Practices (BMPs)
BMPs are methods, measures, or practices designed and selected to reduce or eliminate the discharge of pollutants to surface waters from point and nonpoint source discharges including storm water. BMPs include structural and non-structural control, and operation maintenance procedures, which can be applied before, during, and/or after pollution-producing activities.

Bioaccumulative
Those substances taken up by an organism from its surrounding medium through gill membranes, epithelial tissue, or from food and subsequently concentrated and retained in the body of the organism.

Carcinogenic
Pollutants are substances that are known to cause cancer in living organisms.

TENTATIVE

Coefficient of Variation (CV)
CV is a measure of the data variability and is calculated as the estimated standard deviation divided by the arithmetic mean of the observed values.

Daily Discharge
Daily Discharge is defined as either: (1) the total mass of the constituent discharged over the calendar day (12:00 am through 11:59 pm) or any 24-hour period that reasonably represents a calendar day for purposes of sampling (as specified in the permit), for a constituent with limitations expressed in units of mass or; (2) the unweighted arithmetic mean measurement of the constituent over the day for a constituent with limitations expressed in other units of measurement (e.g., concentration).

The daily discharge may be determined by the analytical results of a composite sample taken over the course of one day (a calendar day or other 24-hour period defined as a day) or by the arithmetic mean of analytical results from one or more grab samples taken over the course of the day.

For composite sampling, if 1 day is defined as a 24-hour period other than a calendar day, the analytical result for the 24-hour period will be considered as the result for the calendar day in which the 24-hour period ends.

Detected, but Not Quantified (DNQ)
DNQ are those sample results less than the RL, but greater than or equal to the laboratory's MDL.

Dilution Credit
Dilution Credit is the amount of dilution granted to a discharge in the calculation of a water quality-based effluent limitation, based on the allowance of a specified mixing zone. It is calculated from the dilution ratio or determined through conducting a mixing zone study or modeling of the discharge and receiving water.

Effluent Concentration Allowance (ECA)
ECA is a value derived from the water quality criterion/objective, dilution credit, and ambient background concentration that is used, in conjunction with the coefficient of variation for the effluent monitoring data, to calculate a long-term average (LTA) discharge concentration. The ECA has the same meaning as waste load allocation (WLA) as used in USEPA guidance (Technical Support Document For Water Quality-based Toxics Control, March 1991, second printing, EPA/505/2-90-001).

Enclosed Bays
Enclosed Bays means indentations along the coast that enclose an area of oceanic water within distinct headlands or harbor works. Enclosed bays include all bays where the narrowest distance between the headlands or outermost harbor works is less than 75 percent of the greatest dimension of the enclosed portion of the bay. Enclosed bays include, but are not limited to, Humboldt Bay, Bodega Harbor, Tomales Bay, Drake's Estero, San Francisco Bay, Morro Bay, Los Angeles-Long Beach Harbor, Upper and Lower Newport Bay, Mission Bay, and San Diego Bay. Enclosed bays do not include inland surface waters or ocean waters.

TENTATIVE

Estimated Chemical Concentration
The estimated chemical concentration that results from the confirmed detection of the substance by the analytical method below the ML value.

Estuaries
Estuaries means waters, including coastal lagoons, located at the mouths of streams that serve as areas of mixing for fresh and ocean waters. Coastal lagoons and mouths of streams that are temporarily separated from the ocean by sandbars shall be considered estuaries. Estuarine waters shall be considered to extend from a bay or the open ocean to a point upstream where there is no significant mixing of fresh water and seawater. Estuarine waters included, but are not limited to, the Sacramento-San Joaquin Delta, as defined in Water Code section 12220, Suisun Bay, Carquinez Strait downstream to the Carquinez Bridge, and appropriate areas of the Smith, Mad, Eel, Noyo, Russian, Klamath, San Diego, and Otay rivers. Estuaries do not include inland surface waters or ocean waters.

Existing Discharger
Any discharger that is not a new discharger. An existing discharger includes an "increasing discharger" (i.e., any existing facility with treatment systems in place for its current discharge that is or will be expanding, upgrading, or modifying its permitted discharge after the effective date of this Order).

Four-Day Average of Daily Maximum Flows
The average of daily maxima taken from the data set in four-day intervals.

Infeasible
Not capable of being accomplished in a successful manner within a reasonable period of time, taking into account economic, environmental, legal, social, and technological factors.

Inland Surface Waters
All surface waters of the State that do not include the ocean, enclosed bays, or estuaries.

Instantaneous Maximum Effluent Limitation
The highest allowable value for any single grab sample or aliquot (i.e., each grab sample or aliquot is independently compared to the instantaneous maximum limitation).

Instantaneous Minimum Effluent Limitation
The lowest allowable value for any single grab sample or aliquot (i.e., each grab sample or aliquot is independently compared to the instantaneous minimum limitation).

Maximum Daily Effluent Limitation (MDEL)
The highest allowable daily discharge of a pollutant, over a calendar day (or 24-hour period). For pollutants with limitations expressed in units of mass, the daily discharge is calculated as the total mass of the pollutant discharged over the day. For pollutants with limitations expressed in other units of measurement, the daily discharge is calculated as the arithmetic mean measurement of the pollutant over the day.

TENTATIVE

Median
The middle measurement in a set of data. The median of a set of data is found by first arranging the measurements in order of magnitude (either increasing or decreasing order). If the number of measurements (*n*) is odd, then the median = $X_{(n+1)/2}$. If *n* is even, then the median = $(X_{n/2} + X_{(n/2)+1})/2$ (i.e., the midpoint between the *n*/2 and *n*/2+1).

Method Detection Limit (MDL)
MDL is the minimum concentration of a substance that can be measured and reported with 99 percent confidence that the analyte concentration is greater than zero, as defined in title 40 of the Code of Federal Regulations, Part 136, Attachment B, revised as of July 3, 1999.

Minimum Level (ML)
ML is the concentration at which the entire analytical system must give a recognizable signal and acceptable calibration point. The ML is the concentration in a sample that is equivalent to the concentration of the lowest calibration standard analyzed by a specific analytical procedure, assuming that all the method specified sample weights, volumes, and processing steps have been followed.

Mixing Zone
Mixing Zone is a limited volume of receiving water that is allocated for mixing with a wastewater discharge where water quality criteria can be exceeded without causing adverse effects to the overall water body.

Not Detected (ND)
Sample results which are less than the laboratory's MDL.

Ocean Waters
The territorial marine waters of the State as defined by California law to the extent these waters are outside of enclosed bays, estuaries, and coastal lagoons. Discharges to ocean waters are regulated in accordance with the State Water Board's California Ocean Plan.

Persistent Pollutants
Persistent pollutants are substances for which degradation or decomposition in the environment is nonexistent or very slow.

Pollutant Minimization Program (PMP)
PMP means waste minimization and pollution prevention actions that include, but are not limited to, product substitution, waste stream recycling, alternative waste management methods, and education of the public and businesses. The goal of the PMP shall be to reduce all potential sources of a priority pollutant(s) through pollutant minimization (control) strategies, including pollution prevention measures as appropriate, to maintain the effluent concentration at or below the water quality-based effluent limitation. Pollution prevention measures may be particularly appropriate for persistent bioaccumulative priority pollutants where there is evidence that beneficial uses are being impacted. The Regional Water Board may consider cost effectiveness when establishing the requirements of a PMP. The completion and implementation of a Pollution Prevention Plan, if required pursuant to Water Code section 13263.3(d), shall be considered to fulfill the PMP requirements.

TENTATIVE

Pollution Prevention
Pollution Prevention means any action that causes a net reduction in the use or generation of a hazardous substance or other pollutant that is discharged into water and includes, but is not limited to, input change, operational improvement, production process change, and product reformulation (as defined in Water Code section 13263.3). Pollution prevention does not include actions that merely shift a pollutant in wastewater from one environmental medium to another environmental medium, unless clear environmental benefits of such an approach are identified to the satisfaction of the State or Regional Water Board.

Reporting Level (RL)
RL is the ML (and its associated analytical method) chosen by the Discharger for reporting and compliance determination from the MLs included in this Order. The MLs included in this Order correspond to approved analytical methods for reporting a sample result that are selected by the Regional Water Board either from Appendix 4 of the SIP in accordance with section 2.4.2 of the SIP or established in accordance with section 2.4.3 of the SIP. The ML is based on the proper application of method-based analytical procedures for sample preparation and the absence of any matrix interferences. Other factors may be applied to the ML depending on the specific sample preparation steps employed. For example, the treatment typically applied in cases where there are matrix-effects is to dilute the sample or sample aliquot by a factor of ten. In such cases, this additional factor must be applied to the ML in the computation of the RL.

Satellite Collection System
The portion, if any, of a sanitary sewer system owned or operated by a different public agency than the agency that owns and operates the wastewater treatment facility that a sanitary sewer system is tributary to.

Six-month Median Effluent Limitation
Six-month median shall apply as a moving median of daily values for any 180-day period (in which the daily values represent flow weighted average concentrations within a 24-hour period.

Source of Drinking Water
Any water designated as municipal or domestic supply (MUN) in a Regional Water Board Basin Plan.

Standard Deviation (σ)
Standard Deviation is a measure of variability that is calculated as follows:

$$\sigma = (\sum[(x - \mu)^2]/(n - 1))^{0.5}$$

where:
x is the observed value;
μ is the arithmetic mean of the observed values; and
n is the number of samples.

TENTATIVE

Toxicity Reduction Evaluation (TRE)
TRE is a study conducted in a step-wise process designed to identify the causative agents of effluent or ambient toxicity, isolate the sources of toxicity, evaluate the effectiveness of toxicity control options, and then confirm the reduction in toxicity. The first steps of the TRE consist of the collection of data relevant to the toxicity, including additional toxicity testing, and an evaluation of facility operations and maintenance practices, and best management practices. A Toxicity Identification Evaluation (TIE) may be required as part of the TRE, if appropriate. (A TIE is a set of procedures to identify the specific chemical(s) responsible for toxicity. These procedures are performed in three phases (characterization, identification, and confirmation) using aquatic organism toxicity tests.)

TENTATIVE

ACRONYMS AND ABBREVIATIONS

AMEL ..... Average Monthly Effluent Limitation
B ..... Background Concentration
BAT ..... Best Available Technology Economically Achievable
Basin Plan ..... Water Quality Control Plan for the Coastal Watersheds of Los Angeles and Ventura Counties
BCT ..... Best Conventional Pollutant Control Technology
BMP ..... Best Management Practices
BMPP ..... Best Management Practices Plan
BPJ ..... Best Professional Judgment
BOD ..... Biochemical Oxygen Demand 5-day @ 20 °C
BPT ..... Best Practicable Treatment Control Technology
C ..... Water Quality Objective
CCR ..... California Code of Regulations
CEQA ..... California Environmental Quality Act
CFR ..... Code of Federal Regulations
CTR ..... California Toxics Rule
CV ..... Coefficient of Variation
CWA ..... Clean Water Act
CWC ..... California Water Code
Discharger ..... Southern California Edison Company
DMR ..... Discharge Monitoring Report
DNQ ..... Detected But Not Quantified
ELAP ..... State Water Resources Control Board, Drinking Water Division, Environmental Laboratory Accreditation Program
ELG ..... Effluent Limitations, Guidelines and Standards
Facility ..... Pebbly Beach Desalination Plant
g/kg ..... grams per kilogram
gpd ..... gallons per day
IC ..... Inhibition Coefficient
IC_{15} ..... Concentration at which the organism is 15% inhibited
IC_{25} ..... Concentration at which the organism is 25% inhibited
IC_{40} ..... Concentration at which the organism is 40% inhibited
IC_{50} ..... Concentration at which the organism is 50% inhibited
LA ..... Load Allocations
LOEC ..... Lowest Observed Effect Concentration
µg/L ..... micrograms per Liter
mg/L ..... milligrams per Liter
MDEL ..... Maximum Daily Effluent Limitation
MEC ..... Maximum Effluent Concentration
MGD ..... Million Gallons Per Day
ML ..... Minimum Level
MRP ..... Monitoring and Reporting Program
ND ..... Not Detected
ng/L ..... nanograms per liter

TENTATIVE

NOEC ..... No Observable Effect Concentration
NPDES ..... National Pollutant Discharge Elimination System
NSPS ..... New Source Performance Standards
NTR ..... National Toxics Rule
OAL ..... Office of Administrative Law
PAHs ..... Polynuclear Aromatic Hydrocarbons
pg/L ..... picograms per liter
PMEL ..... Proposed Maximum Daily Effluent Limitation
PMP ..... Pollutant Minimization Plan
POTW ..... Publicly Owned Treatment Works
ppm ..... parts per million
ppb ..... parts per billion
QA ..... Quality Assurance
QA/QC ..... Quality Assurance/Quality Control
Ocean Plan ..... Water Quality Control Plan for Ocean Waters of California
Regional Water Board ..... California Regional Water Quality Control Board, Los Angeles Region
RPA ..... Reasonable Potential Analysis
SCP ..... Spill Contingency Plan
SIP ..... State Implementation Policy (Policy for Implementation of Toxics Standards for Inland Surface Waters, Enclosed Bays, and Estuaries of California)
SMR ..... Self Monitoring Reports
State Water Board ..... California State Water Resources Control Board
SWPPP ..... Storm Water Pollution Prevention Plan
TAC ..... Test Acceptability Criteria
Thermal Plan ..... Water Quality Control Plan for Control of Temperature in the Coastal and Interstate Water and Enclosed Bays and Estuaries of California
TIE ..... Toxicity Identification Evaluation
TMDL ..... Total Maximum Daily Load
TOC ..... Total Organic Carbon
TRE ..... Toxicity Reduction Evaluation
TSD ..... Technical Support Document
TSS ..... Total Suspended Solid
TU_c ..... Chronic Toxicity Unit
USEPA ..... United States Environmental Protection Agency
WDR ..... Waste Discharge Requirements
WET ..... Whole Effluent Toxicity
WLA ..... Waste Load Allocations
WQBELs ..... Water Quality-Based Effluent Limitations
WQS ..... Water Quality Standards
% ..... Percent

TENTATIVE

ATTACHMENT B – MAP

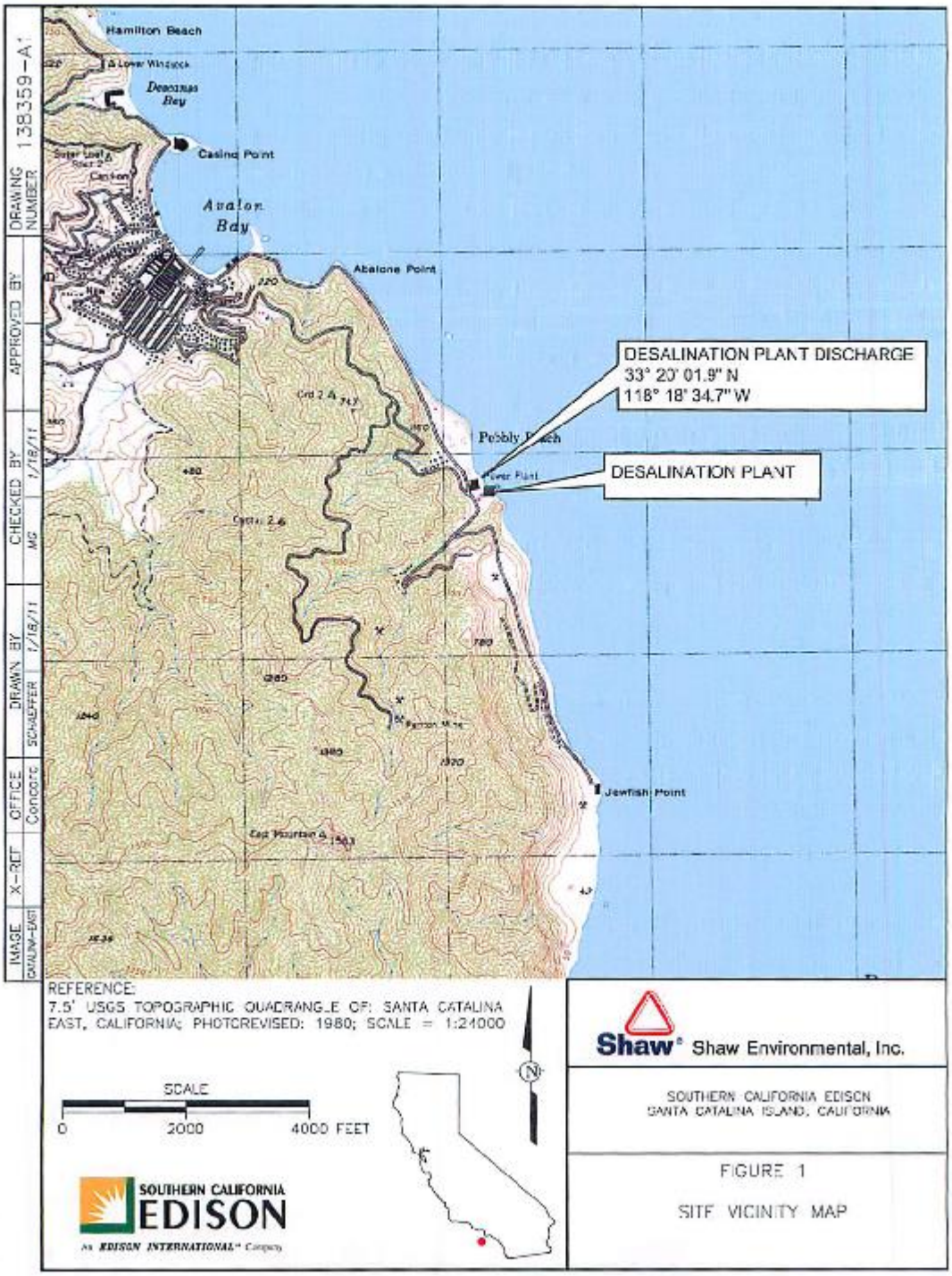

TENTATIVE

ATTACHMENT C – FLOW SCHEMATIC

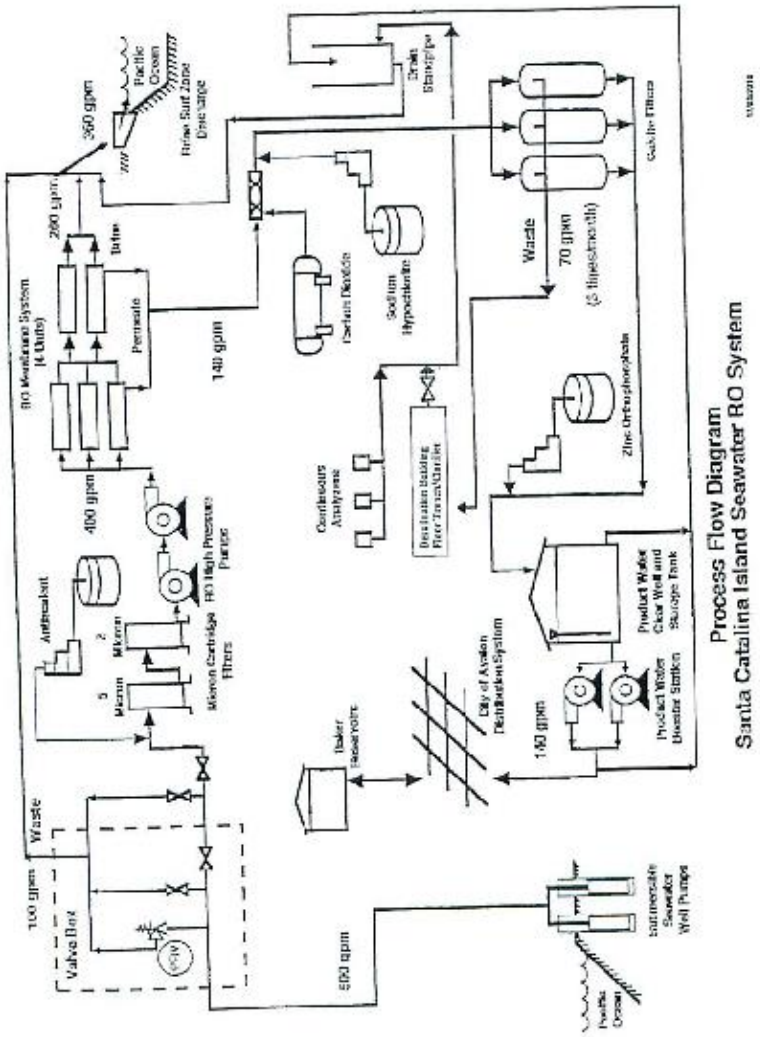

TENTATIVE

ATTACHMENT D – STANDARD PROVISIONS

I. STANDARD PROVISIONS – PERMIT COMPLIANCE

A. Duty to Comply

1. The Discharger must comply with all of the conditions of this Order. Any noncompliance constitutes a violation of the Clean Water Act (CWA) and the California Water Code and is grounds for enforcement action, for permit termination, revocation and reissuance, or modification; or denial of a permit renewal application [part 122.41(a)].

2. The Discharger shall comply with effluent standards or prohibitions established under Section 307(a) of the CWA for toxic pollutants and with standards for sewage sludge use or disposal established under Section 405(d) of the CWA within the time provided in the regulations that establish these standards or prohibitions, even if this Order has not yet been modified to incorporate the requirement [part 122.41(a)(1)].

B. Need to Halt or Reduce Activity Not a Defense

It shall not be a defense for a Discharger in an enforcement action that it would have been necessary to halt or reduce the permitted activity in order to maintain compliance with the conditions of this Order [part 122.41(c)].

C. Duty to Mitigate

The Discharger shall take all reasonable steps to minimize or prevent any discharge or sludge use or disposal in violation of this Order that has a reasonable likelihood of adversely affecting human health or the environment [part 122.41(d)].

D. Proper Operation and Maintenance

The Discharger shall at all times properly operate and maintain all facilities and systems of treatment and control (and related appurtenances) which are installed or used by the Discharger to achieve compliance with the conditions of this Order. Proper operation and maintenance also includes adequate laboratory controls and appropriate quality assurance procedures. This provision requires the operation of backup or auxiliary facilities or similar systems that are installed by a Discharger only when necessary to achieve compliance with the conditions of this Order [part 122.41(e)].

E. Property Rights

1. This Order does not convey any property rights of any sort or any exclusive privileges [part 122.41(g)].

TENTATIVE

2. The issuance of this Order does not authorize any injury to persons or property or invasion of other private rights, or any infringement of state or local law or regulations [part 122.5(c)].

F. Inspection and Entry

The Discharger shall allow the Regional Water Board, State Water Board, United States Environmental Protection Agency (USEPA), and/or their authorized representatives (including an authorized contractor acting as their representative), upon the presentation of credentials and other documents, as may be required by law, to [part 122.41(i)] [Water Code section 13383]:

1. Enter upon the Discharger's premises where a regulated facility or activity is located or conducted, or where records are kept under the conditions of this Order [part 122.41(i)(1)];

2. Have access to and copy, at reasonable times, any records that must be kept under the conditions of this Order [part 122.41(i)(2)];

3. Inspect and photograph, at reasonable times, any facilities, equipment (including monitoring and control equipment), practices, or operations regulated or required under this Order [part 122.41(i)(3)]; and

4. Sample or monitor, at reasonable times, for the purposes of assuring Order compliance or as otherwise authorized by the CWA or the Water Code, any substances or parameters at any location [part 122.41(i)(4)].

G. Bypass

1. Definitions

i. "Bypass" means the intentional diversion of waste streams from any portion of a treatment facility [part 122.41(m)(1)(i)].

ii. "Severe property damage" means substantial physical damage to property, damage to the treatment facilities, which causes them to become inoperable, or substantial and permanent loss of natural resources that can reasonably be expected to occur in the absence of a bypass. Severe property damage does not mean economic loss caused by delays in production [part 22.41(m)(1)(ii)].

2. Bypass not exceeding limitations. The Discharger may allow any bypass to occur which does not cause exceedances of effluent limitations, but only if it is for essential maintenance to assure efficient operation. These bypasses are not subject to the provisions listed in Standard Provisions – Permit Compliance I.G.3, I.G.4, and I.G.5 below [part 122.41(m)(2)].

3. Prohibition of bypass. Bypass is prohibited, and the Regional Water Board may take enforcement action against a Discharger for bypass, unless [part 122.41(m)(4)(i)]:

TENTATIVE

a. Bypass was unavoidable to prevent loss of life, personal injury, or severe property damage [part 122.41(m)(4)(i)(A)];

b. There were no feasible alternatives to the bypass, such as the use of auxiliary treatment facilities, retention of untreated wastes, or maintenance during normal periods of equipment downtime. This condition is not satisfied if adequate back-up equipment should have been installed in the exercise of reasonable engineering judgment to prevent a bypass that occurred during normal periods of equipment downtime or preventive maintenance [part 122.41(m)(4)(i)(B)]; and

c. The Discharger submitted notice to the Regional Water Board as required under Standard Provisions – Permit Compliance I.G.5 below [part 122.41(m)(4)(i)(C)].

4. The Regional Water Board may approve an anticipated bypass, after considering its adverse effects, if the Regional Water Board determines that it will meet the three conditions listed in Standard Provisions – Permit Compliance I.G.3 above [part 122.41(m)(4)(ii)].

5. Notice

a. Anticipated bypass. If the Discharger knows in advance of the need for a bypass, it shall submit a notice, if possible at least 10 days before the date of the bypass [part 122.41(m)(3)(i)].

b. Unanticipated bypass. The Discharger shall submit notice of an unanticipated bypass as required in Standard Provisions - Reporting V.E below (24-hour notice) [part 122.41(m)(3)(ii)].

H. Upset

Upset means an exceptional incident in which there is unintentional and temporary noncompliance with technology based permit effluent limitations because of factors beyond the reasonable control of the Discharger. An upset does not include noncompliance to the extent caused by operational error, improperly designed treatment facilities, inadequate treatment facilities, lack of preventive maintenance, or careless or improper operation [part 122.41(n)(1)].

1. Effect of an upset. An upset constitutes an affirmative defense to an action brought for noncompliance with such technology based permit effluent limitations if the requirements of Standard Provisions – Permit Compliance I.H.2 below are met. No determination made during administrative review of claims that noncompliance was caused by upset, and before an action for noncompliance, is final administrative action subject to judicial review [part 122.41(n)(2)].

2. Conditions necessary for a demonstration of upset. A Discharger who wishes to establish the affirmative defense of upset shall demonstrate, through properly signed, contemporaneous operating logs or other relevant evidence that [part 122.41(n)(3)]:

TENTATIVE

a. An upset occurred and that the Discharger can identify the cause(s) of the upset [part 122.41(n)(3)(i)];

b. The permitted facility was, at the time, being properly operated [part 122.41(n)(3)(ii)];

c. The Discharger submitted notice of the upset as required in Standard Provisions – Reporting V.E.2.b below (24-hour notice) [part 122.41(n)(3)(iii)]; and

d. The Discharger complied with any remedial measures required under Standard Provisions – Permit Compliance I.C above [part 122.41(n)(3)(iv)].

3. Burden of proof. In any enforcement proceeding, the Discharger seeking to establish the occurrence of an upset has the burden of proof [part 122.41(n)(4)].

II. STANDARD PROVISIONS – PERMIT ACTION

A. General

This Order may be modified, revoked and reissued, or terminated for cause. The filing of a request by the Discharger for modification, revocation and reissuance, or termination, or a notification of planned changes or anticipated noncompliance does not stay any Order condition [part 122.41(f)].

B. Duty to Reapply

If the Discharger wishes to continue an activity regulated by this Order after the expiration date of this Order, the Discharger must apply for and obtain a new permit [part 122.41(b)].

C. Transfers

This Order is not transferable to any person except after notice to the Regional Water Board. The Regional Water Board may require modification or revocation and reissuance of the Order to change the name of the Discharger and incorporate such other requirements as may be necessary under the CWA and the Water Code [part 122.41(l)(3) and part 122.61].

III. STANDARD PROVISIONS – MONITORING

A. Samples and measurements taken for the purpose of monitoring shall be representative of the monitored activity [part 122.41(j)(1)].

B. Monitoring results must be conducted according to test procedures under Part 136 or, in the case of sludge use or disposal, approved under Part 136 unless otherwise specified in Part 503 unless other test procedures have been specified in this Order [part 122.41(j)(4) and part 122.44(i)(1)(iv)].

TENTATIVE

IV. STANDARD PROVISIONS – RECORDS

1. Except for records of monitoring information required by this Order related to the Discharger's sewage sludge use and disposal activities, which shall be retained for a period of at least five years (or longer as required by Part 503), the Discharger shall retain records of all monitoring information, including all calibration and maintenance records and all original strip chart recordings for continuous monitoring instrumentation, copies of all reports required by this Order, and records of all data used to complete the application for this Order, for a period of at least three (3) years from the date of the sample, measurement, report or application. This period may be extended by request of the Regional Water Board Executive Officer at any time [part 122.41(j)(2)].

2. Records of monitoring information shall include:

   1. The date, exact place, and time of sampling or measurements [part 122.41(j)(3)(i)];

   2. The individual(s) who performed the sampling or measurements [part 122.41(j)(3)(ii)];

   3. The date(s) analyses were performed [part 122.41(j)(3)(iii)];

   4. The individual(s) who performed the analyses [part 122.41(j)(3)(iv)];

   5. The analytical techniques or methods used [part 122.41(j)(3)(v)]; and

   6. The results of such analyses [part 122.41(j)(3)(vi)].

3. **Claims of confidentiality for the following information will be denied [part 122.7(b)]:**

   1. The name and address of any permit applicant or Discharger [part 122.7(b)(1)]; and

   2. Permit applications and attachments, permits and effluent data [part 122.7(b)(2)].

V. STANDARD PROVISIONS – REPORTING

1. Duty to Provide Information

The Discharger shall furnish to the Regional Water Board, State Water Board, or USEPA within a reasonable time, any information which the Regional Water Board, State Water Board, or USEPA may request to determine whether cause exists for modifying, revoking and reissuing, or terminating this Order or to determine compliance with this Order. Upon request, the Discharger shall also furnish to the Regional Water Board, State Water Board, or USEPA copies of records required to be kept by this Order [part 122.41(h)] [Water Code section 13267].

TENTATIVE

2. Signatory and Certification Requirements

1. All applications, reports, or information submitted to the Regional Water Board, State Water Board, and/or USEPA shall be signed and certified in accordance with Standard Provisions – Reporting V.B.2, V.B.3, V.B.4, and V.B.5 below [part 122.41(k)].

2. All permit applications shall be signed by a responsible corporate officer. For the purpose of this section, a responsible corporate officer means: (i) A president, secretary, treasurer, or vice-president of the corporation in charge of a principal business function, or any other person who performs similar policy- or decision-making functions for the corporation, or (ii) the manager of one or more manufacturing, production, or operating facilities, provided, the manager is authorized to make management decisions which govern the operation of the regulated facility including having the explicit or implicit duty of making major capital investment recommendations, and initiating and directing other comprehensive measures to assure long term environmental compliance with environmental laws and regulations; the manager can ensure that the necessary systems are established or actions taken to gather complete and accurate information for permit application requirements; and where authority to sign documents has been assigned or delegated to the manager in accordance with corporate procedures. [part 122.22(a)(1)].

3. All reports required by this Order and other information requested by the Regional Water Board, State Water Board, or USEPA shall be signed by a person described in Standard Provisions – Reporting V.B.2 above, or by a duly authorized representative of that person. A person is a duly authorized representative only if:

a. The authorization is made in writing by a person described in Standard Provisions – Reporting V.B.2 above [part 122.22(b)(1)];

b. The authorization specifies either an individual or a position having responsibility for the overall operation of the regulated facility or activity such as the position of plant manager, operator of a well or a well field, superintendent, position of equivalent responsibility, or an individual or position having overall responsibility for environmental matters for the company. (A duly authorized representative may thus be either a named individual or any individual occupying a named position.) [part 122.22(b)(2)]; and

c. The written authorization is submitted to the Regional Water Board and State Water Board [part 122.22(b)(3)].

4. If an authorization under Standard Provisions – Reporting V.B.3 above is no longer accurate because a different individual or position has responsibility for the overall operation of the facility, a new authorization satisfying the requirements of Standard Provisions – Reporting V.B.3 above must be submitted to the Regional Water Board

TENTATIVE

and State Water Board prior to or together with any reports, information, or applications, to be signed by an authorized representative [part 122.22(c)].

5. Any person signing a document under Standard Provisions – Reporting V.B.2 or V.B.3 above shall make the following certification:

"I certify under penalty of law that this document and all attachments were prepared under my direction or supervision in accordance with a system designed to assure that qualified personnel properly gather and evaluate the information submitted. Based on my inquiry of the person or persons who manage the system or those persons directly responsible for gathering the information, the information submitted is, to the best of my knowledge and belief, true, accurate, and complete. I am aware that there are significant penalties for submitting false information, including the possibility of fine and imprisonment for knowing violations." [part 122.22(d)].

3. Monitoring Reports

1. Monitoring results shall be reported at the intervals specified in the Monitoring and Reporting Program (Attachment E) in this Order [part 122.22(l)(4)].

2. Monitoring results must be reported on a Discharge Monitoring Report (DMR) form or forms provided or specified by the Regional Water Board or State Water Board for reporting results of monitoring of sludge use or disposal practices [part 122.41(l)(4)(i)].

3. If the Discharger monitors any pollutant more frequently than required by this Order using test procedures approved under Part 136 or, in the case of sludge use or disposal, approved under Part 136 unless otherwise specified in Part 503, or as specified in this Order, the results of this monitoring shall be included in the calculation and reporting of the data submitted in the DMR or sludge reporting form specified by the Regional Water Board [part 122.41(l)(4)(ii)].

4. Calculations for all limitations, which require averaging of measurements, shall utilize an arithmetic mean unless otherwise specified in this Order [part 122.41(l)(4)(iii)].

4. Compliance Schedules

Reports of compliance or noncompliance with, or any progress reports on, interim and final requirements contained in any compliance schedule of this Order, shall be submitted no later than 14 days following each schedule date [part 122.41(l)(5)].

5. Twenty-Four Hour Reporting

1. The Discharger shall report any noncompliance that may endanger health or the environment. Any information shall be provided orally within 24 hours from the time the Discharger becomes aware of the circumstances. A written submission shall also be provided within five (5) days of the time the Discharger becomes aware of

TENTATIVE

the circumstances. The written submission shall contain a description of the noncompliance and its cause; the period of noncompliance, including exact dates and times, and if the noncompliance has not been corrected, the anticipated time it is expected to continue; and steps taken or planned to reduce, eliminate, and prevent reoccurrence of the noncompliance [part 122.41(l)(6)(i)].

2. The following shall be included as information that must be reported within 24 hours under this paragraph [part 122.41(l)(6)(ii)]:

a. Any unanticipated bypass that exceeds any effluent limitation in this Order [part 122.41(l)(6)(ii)(A)].

b. Any upset that exceeds any effluent limitation in this Order [part 122.41(l)(6)(ii)(B)].

3. The Regional Water Board may waive the above-required written report under this provision on a case-by-case basis if an oral report has been received within 24 hours [part 122.41(l)(6)(iii)].

6. Planned Changes

The Discharger shall give notice to the Regional Water Board as soon as possible of any planned physical alterations or additions to the permitted facility. Notice is required under this provision only when [part 122.41(l)(1)]:

1. The alteration or addition to a permitted facility may meet one of the criteria for determining whether a facility is a new source in part 122.29(b) [part 122.41(l)(1)(i)]; or

2. The alteration or addition could significantly change the nature or increase the quantity of pollutants discharged. This notification applies to pollutants that are subject neither to effluent limitations in this Order nor to notification requirements under part 122.42(a)(1) (see Additional Provisions—Notification Levels VII.A.1) [part 122.41(l)(1)(ii)].

3. The alteration or addition results in a significant change in the Discharger's sludge use or disposal practices, and such alteration, addition, or change may justify the application of permit conditions that are different from or absent in the existing permit, including notification of additional use or disposal sites not reported during the permit application process or not reported pursuant to an approved land application plan [part 122.41(l)(1)(iii)].

7. Anticipated Noncompliance

The Discharger shall give advance notice to the Regional Water Board or State Water Board of any planned changes in the permitted facility or activity that may result in noncompliance with General Order requirements [part 122.41(l)(2)].

TENTATIVE

8. Other Noncompliance

The Discharger shall report all instances of noncompliance not reported under Standard Provisions – Reporting V.C, V.D, and V.E above at the time monitoring reports are submitted. The reports shall contain the information listed in Standard Provision – Reporting V.E above [part 122.41(l)(7)].

9. Other Information

When the Discharger becomes aware that it failed to submit any relevant facts in a permit application, or submitted incorrect information in a permit application or in any report to the Regional Water Board, State Water Board, or USEPA, the Discharger shall promptly submit such facts or information [part 122.41(l)(8)].

VI. STANDARD PROVISIONS – ENFORCEMENT

A. The Regional Water Board is authorized to enforce the terms of this permit under several provisions of the Water Code, including, but not limited to, sections 13385, 13386, and 13387.

B. The CWA provides that any person who violates section 301, 302, 306, 307, 308, 318 or 405 of the Act, or any permit condition or limitation implementing any such sections in a permit issued under section 402, or any requirement imposed in a pretreatment program approved under sections 402(a)(3) or 402(b)(8) of the Act, is subject to a civil penalty not to exceed $25,000 per day for each violation. The CWA provides that any person who negligently violates sections 301, 302, 306, 307, 308, 318, or 405 of the Act, or any condition or limitation implementing any of such sections in a permit issued under section 402 of the Act, or any requirement imposed in a pretreatment program approved under section 402(a)(3) or 402(b)(8) of the Act, is subject to criminal penalties of $2,500 to $25,000 per day of violation, or imprisonment of not more than one (1) year, or both. In the case of a second or subsequent conviction for a negligent violation, a person shall be subject to criminal penalties of not more than $50,000 per day of violation, or by imprisonment of not more than two (2) years, or both. Any person who knowingly violates such sections, or such conditions or limitations is subject to criminal penalties of $5,000 to $50,000 per day of violation, or imprisonment for not more than three (3) years, or both. In the case of a second or subsequent conviction for a knowing violation, a person shall be subject to criminal penalties of not more than $100,000 per day of violation, or imprisonment of not more than six (6) years, or both. Any person who knowingly violates section 301, 302, 303, 306, 307, 308, 318 or 405 of the Act, or any permit condition or limitation implementing any of such sections in a permit issued under section 402 of the Act, and who knows at that time that he thereby places another person in imminent danger of death or serious bodily injury, shall, upon conviction, be subject to a fine of not more than $250,000 or imprisonment of not more than 15 years, or both. In the case of a second or subsequent conviction for a knowing endangerment violation, a person shall be subject to a fine of not more than $500,000 or by imprisonment of not more than 30 years, or both. An organization, as defined in section 309(c)(3)(B)(iii) of the CWA, shall, upon conviction of violating the imminent

TENTATIVE

danger provision, be subject to a fine of not more than $1,000,000 and can be fined up to $2,000,000 for second or subsequent convictions [*part 122.41(a)(2)*] [*Water Code sections 13385 and 13387*].

C. Any person may be assessed an administrative penalty by the Regional Water Board for violating section 301, 302, 306, 307, 308, 318 or 405 of this Act, or any permit condition or limitation implementing any of such sections in a permit issued under section 402 of this Act. Administrative penalties for Class I violations are not to exceed $10,000 per violation, with the maximum amount of any Class I penalty assessed not to exceed $25,000. Penalties for Class II violations are not to exceed $10,000 per day for each day during which the violation continues, with the maximum amount of any Class II penalty not to exceed $125,000 [*part 122.41(a)(3)*].

D. The CWA provides that any person who falsifies, tampers with, or knowingly renders inaccurate any monitoring device or method required to be maintained under this permit shall, upon conviction, be punished by a fine of not more than $10,000, or by imprisonment for not more than 2 years, or both. If a conviction of a person is for a violation committed after a first conviction of such person under this paragraph, punishment is a fine of not more than $20,000 per day of violation, or by imprisonment of not more than 4 years, or both [*part 122.41(j)(5)*].

E. The CWA provides that any person who knowingly makes any false statement, representation, or certification in any record or other document submitted or required to be maintained under this Order, including monitoring reports or reports of compliance or noncompliance shall, upon conviction, be punished by a fine of not more than $10,000 per violation, or by imprisonment for not more than six months per violation, or by both [*part 122.41(k)(2)*].

TENTATIVE

VII. ADDITIONAL PROVISIONS – NOTIFICATION LEVELS

A. Non-Municipal Facilities

Existing manufacturing, commercial, mining, and silvicultural Dischargers shall notify the Regional Water Board as soon as they know or have reason to believe [part 122.42(a)]:

1. That any activity has occurred or will occur that would result in the discharge, on a routine or frequent basis, of any toxic pollutant that is not limited in this Order, if that discharge will exceed the highest of the following "notification levels" [part 122.42(a)(1)]:

a. 100 micrograms per liter (µg/L) [part 122.42(a)(1)(i)];

b. 200 µg/L for acrolein and acrylonitrile; 500 µg/L for 2,4-dinitrophenol and 2-methyl-4,6-dinitrophenol; and 1 milligram per liter (mg/L) for antimony [part 122.42(a)(1)(ii)];

c. Five (5) times the maximum concentration value reported for that pollutant in the Report of Waste Discharge [part 122.42(a)(1)(iii)]; or

d. The level established by the Regional Water Board in accordance with part 122.44(f) [part 122.42(a)(1)(iv)].

2. That any activity has occurred or will occur that would result in the discharge, on a non-routine or infrequent basis, of any toxic pollutant that is not limited in this Order, if that discharge will exceed the highest of the following “notification levels" [part 122.42(a)(2)]:

e. 500 micrograms per liter (µg/L) [part 122.42(a)(2)(i)];

f. 1 milligram per liter (mg/L) for antimony [part 122.42(a)(2)(ii)];

g. Ten (10) times the maximum concentration value reported for that pollutant in the Report of Waste Discharge [part 122.42(a)(2)(iii)]; or

h. The level established by the Regional Water Board in accordance with part 122.44(f) [part 122.42(a)(2)(iv)].

TENTATIVE

ATTACHMENT E – MONITORING AND REPORTING PROGRAM (MRP NO. 6899)

Table of Contents

I. General Monitoring Provisions E-2
II. Monitoring Locations E-5
III. Influent Monitoring Requirements – Not applicable E-5
IV. Effluent Monitoring Requirements E-5
  A. Monitoring Location EFF-001 ..... E-5
V. Whole Effluent Toxicity Testing Requirements E-11
  A. Definition of Toxicity E-11
  B. Chronic Toxicity Effluent Monitoring Program E-11
  C. Quality Assurance E-12
  D. Preparation of an Initial Investigation TRE Workplan E-12
  E. Accelerated Monitoring E-12
  F. Steps in Toxicity Reduction Evaluation (TRE) and Toxicity Identification Evaluation (TIE) E-13
  G. Ammonia Removal E-15
  H. Reporting E-15
VI. Land Discharge Monitoring Requirements – Not Applicable E-17
VII. Reclamation Monitoring Requirements – Not Applicable E-17
VIII. Receiving Water Monitoring Requirements – Surface Water and Groundwater E-17
  A. Monitoring Location RSW-001 ..... E-17
  B. Visual Monitoring of the Receiving Water Sampling Point E-20
IX. Other Monitoring Requirements – Not Applicable E-21
X. Reporting Requirements E-21
  A. General Monitoring and Reporting Requirements E-21
  B. Self Monitoring Reports (SMRs) E-21
  C. Discharge Monitoring Reports (DMRs) E-23
  D. Other Reports E-23

List of Tables

Table E-1. Monitoring Station Locations E-5
Table E-2. Effluent Monitoring, Monitoring Location EFF-001 ..... E-6
Table E-3. Effluent Monitoring (Flushing Activity), Monitoring Location EFF-001 ..... E-10
Table E-4. Receiving Water Monitoring Requirements – RSW-001 ..... E-17
Table E-5. Monitoring Periods and Reporting Schedule E-22

TENTATIVE

ATTACHMENT E – MONITORING AND REPORTING PROGRAM (MRP) NO. 6899

The Code of Federal Regulations part 122.48 requires that all NPDES permits specify monitoring and reporting requirements. Water Code Sections 13267 and 13383 also authorize the Regional Water Quality Control Board (Regional Water Board) to require technical and monitoring reports. This MRP establishes monitoring and reporting requirements, which implement the federal and California regulations.

I. GENERAL MONITORING PROVISIONS

1. An effluent sampling station shall be established for the point of discharge (Discharge Point 001 [Latitude 33° 20′ 01.9″ North, Longitude 118° 18′ 34.7″ West]) and shall be located where representative samples of that effluent can be obtained.

2. Effluent samples shall be taken downstream of any addition to treatment works and prior to mixing with the receiving waters.

3. The Regional Water Board shall be notified in writing of any change in the sampling stations once established or in the methods for determining the quantities of pollutants in the individual waste streams.

4. Pollutants shall be analyzed using the analytical methods described in sections 136.3, 136.4, and 136.5 (revised March 12, 2007); or, where no methods are specified for a given pollutant, by methods approved by this Regional Water Board or the State Water Resources Control Board (State Water Board). Laboratories analyzing effluent samples and receiving water samples shall be certified by the State Water Board, Drinking Water Division, Environmental Laboratory Accreditation Program (ELAP) or approved by the Executive Officer and must include quality assurance/quality control (QA/QC) data in their reports. A copy of the laboratory certification shall be provided each time a new certification and/or renewal of the certification is obtained from ELAP.

5. For any analyses performed for which no procedure is specified in the USEPA guidelines or in the MRP, the constituent or parameter analyzed and the method or procedure used must be specified in the monitoring report.

6. Each monitoring report must affirm in writing that “all analyses were conducted at a laboratory certified for such analyses by the State Water Board or approved by the Executive Officer and in accordance with current USEPA guideline procedures or as specified in this MRP”.

7. The monitoring reports shall specify the analytical method used, the Method Detection Limit (MDL), and the Minimum Level (ML) for each pollutant. For the purpose of reporting compliance with numerical limitations, performance goals, and receiving water limitations, analytical data shall be reported by one of the following methods, as appropriate:

1. An actual numerical value for sample results greater than or equal to the ML; or

TENTATIVE

2. "Detected, but Not Quantified (DNQ)" if results are greater than or equal to the laboratory's MDL but less than the ML; or,

3. "Not-Detected (ND)" for sample results less than the laboratory's MDL with the MDL indicated for the analytical method used.

Analytical data reported as "less than" for the purpose of reporting compliance with permit limitations shall be the same or lower than the permit limit(s) established for the given parameter.

Current MLs (Attachment G) are those published by the by the State Water Resources Control Board (State Water Board) in the *California Ocean Plan*.

8. Where possible, the MLs employed for effluent analyses shall be lower than the permit limitations established for a given parameter. If the ML value is not below the effluent limitation, then the lowest ML value and its associated analytical method shall be selected for compliance purposes. At least once a year, the Discharger shall submit a list of the analytical methods employed for each test and associated laboratory QA/QC procedures.

The Regional Water Board, in consultation with the State Water Board Quality Assurance Program, shall establish a ML that is not contained in Attachment G to be included in the Discharger's permit in any of the following situations:

1. When the pollutant under consideration is not included in Attachment G;

2. When the Discharger and Regional Water Board agree to include in the permit a test method that is more sensitive than that specified in Part 136 (revised March 12, 2007);

3. When the Discharger agrees to use an ML that is lower than that listed in Attachment G;

4. When the Discharger demonstrates that the calibration standard matrix is sufficiently different from that used to establish the ML in Attachment G, and proposes an appropriate ML for their matrix; or,

5. When the Discharger uses a method whose quantification practices are not consistent with the definition of an ML. Examples of such methods are the USEPA-approved method 1613 for dioxins and furans, method 1624 for volatile organic substances, and method 1625 for semi-volatile organic substances. In such cases, the Discharger, the Regional Water Board, and the State Water Board shall agree on a lowest quantifiable limit and that limit will substitute for the ML for reporting and compliance determination purposes.

TENTATIVE

9. Water/wastewater samples must be analyzed within allowable holding time limits as specified in section 136.3. All QA/QC items must be run on the same dates the samples were actually analyzed, and the results shall be reported in the Regional Water Board format, when it becomes available, and submitted with the laboratory reports. Proper chain of custody procedures must be followed, and a copy of the chain of custody shall be submitted with the report.

10. All analyses shall be accompanied by the chain of custody, including but not limited to data and time of sampling, sample identification, and name of person who performed sampling, date of analysis, name of person who performed analysis, QA/QC data, method detection limits, analytical methods, copy of laboratory certification, and a perjury statement executed by the person responsible for the laboratory.

11. The Discharger shall calibrate and perform maintenance procedures on all monitoring instruments and to insure accuracy of measurements, or shall insure that both equipment activities will be conducted.

12. The Discharger shall have, and implement, an acceptable written quality assurance (QA) plan for laboratory analyses. Unless otherwise specified in the analytical method, duplicate samples must be analyzed at a frequency of 5% (1 in 20 samples) with at least one if there are fewer than 20 samples in a batch. A batch is defined as a single analytical run encompassing no more than 24 hours from start to finish. A similar frequency shall be maintained for analyzing spiked samples.

13. When requested by the Regional Water Board or USEPA, the Discharger will participate in the NPDES discharge monitoring report QA performance study. The Discharger must have a success rate equal to or greater than 80%.

14. For parameters that both average monthly and daily maximum limits are specified and the monitoring frequency is less than four times a month, the following shall apply. If an analytical result is greater than the average monthly limit, the Discharger shall collect four additional samples at approximately equal intervals during the month, until compliance with the average monthly limit has been demonstrated. All five analytical results shall be reported in the monitoring report for that month, or 45 days after results for the additional samples were received, whichever is later. In the event of noncompliance with an average monthly effluent limitation, the sampling frequency for that constituent shall be increased to weekly and shall continue at this level until compliance with the average monthly effluent limitation has been demonstrated. The Discharger shall provide for the approval of the Executive Officer a program to ensure future compliance with the average monthly limit.

15. In the event wastes are transported to a different disposal site during the report period, the following shall be reported in the monitoring report:

1. Types of wastes and quantity of each type;

TENTATIVE

2. Name and address for each hauler of wastes (or method of transport if other than by hauling); and

3. Location of the final point(s) of disposal for each type of waste.

If no wastes are transported off-site during the reporting period, a statement to that effect shall be submitted.

16. Each monitoring report shall state whether or not there was any change in the discharge as described in the Order during the reporting period.

17. Laboratories analyzing monitoring samples shall be certified by the Department of Public Health, in accordance with the provision of Water Code section 13176, and must include quality assurance/quality control data with their reports.

II. MONITORING LOCATIONS

The Discharger shall establish the following monitoring locations to demonstrate compliance with the effluent limitations, discharge specifications, and other requirements in this Order:

Table E-1. Monitoring Station Locations

Discharge Point Name	Monitoring Location Name	Monitoring Location Description (include Latitude and Longitude when available)
001	EFF-001	Representative sample of effluent, prior to discharge to the rip-rap seawall and into the Pacific Ocean. [Latitude 33° 20' 01.9" N, Longitude 118° 18' 34.7" W]
---	RSW-001	A point extending three feet from the rip-rap seawall where initial mixing occurs (at the edge of the mixing zone).

III. INFLUENT MONITORING REQUIREMENTS – NOT APPLICABLE

IV. EFFLUENT MONITORING REQUIREMENTS

A. Monitoring Location EFF-001

1. The Discharger shall monitor reverse osmosis brine, filter backwash, untreated seawater, and wastewater from flushing the seawater supply pipelines, Monitoring Location EFF-001 as follows. If more than one analytical test method is listed for a given parameter, the Discharger must select from the listed methods and corresponding Minimum Level:

TENTATIVE

a. Effluent monitoring for reverse osmosis brine, filter backwash, untreated seawater:

Table E-2. Effluent Monitoring, Monitoring Location EFF-001

Parameter	Units	Sample Type	Minimum Sampling Frequency	Required Analytical Test Method
Flow	gpd	Continuous	1/Day	--
Temperature	°F	Grab	1/Week	[1]
Total coliform	MPN/100 ml	grab	1/Week [3]	[1]
Fecal coliform	MPN/100 ml	grab	1/Week [3]	[1]
Enterococcus	MPN/100 ml	grab	1/Week [3]	[1]
Oil and Grease [2]	mg/L	Grab	1/Month	[1]
pH	Standard Units	Grab	1/Month [4]	[1]
Total Suspended Solids [2]	mg/L	Grab	1/Month [4]	[1]
Settleable Solids	Ml/L	Grab	1/Month [4]	[1]
Turbidity	NTU	Grab	1/Month [4]	[1]
Arsenic, Total Recoverable [2]	µg/L	Grab	1/Month [4]	[1]
Cadmium, Total Recoverable [2]	µg/L	Grab	1/Month [4]	[1]
Chromium III [2]	µg/L	Grab	1/Month [4]	[1]
Chromium VI [2]	µg/L	Grab	1/Month [4]	[1]
Copper, Total Recoverable [2]	µg/L	Grab	1/Month [4]	[1]
Lead, Total Recoverable [2]	µg/L	Grab	1/Month [4]	[1]
Mercury, Total Recoverable [2]	µg/L	Grab	1/Month [4]	[1]
Nickel, Total Recoverable [2]	µg/L	Grab	1/Month [4]	[1]
Selenium, Total Recoverable [2]	µg/L	Grab	1/Month [4]	[1]
Silver, Total Recoverable [2]	µg/L	Grab	1/Month [4]	[1]
Zinc, Total Recoverable [2]	µg/L	Grab	1/Month [4]	[1]
Bis(2-ethylhexyl)Phthalate [2]	µg/L	Grab	1/Month [4]	[1]
Tributyltin [2]	µg/L	Grab	1/Month [4]	[1]
Biochemical Oxygen Demand (BOD_5@20°C) [2]	mg/L	Grab	1/Quarter	[1]
Methylene Blue Activated Substances (MBAS) [2]	mg/L	Grab	1/Quarter	[1]
Methyl Tertiary Butyl Ether (MTBE) [2]	µg/L	Grab	1/Semi-Annual Period	[1]
2,4-Dinitrophenol [2]	µg/L	Grab	1/Semi-Annual Period	[1]
2,4,6-Trichlorophenol [2]	µg/L	Grab	1/Semi-Annual Period	[1]
4,6-Dinitro-2-methylphenol [2]	µg/L	Grab	1/Semi-Annual Period	[1]
Phenolic Compounds (chlorinated) [2, 5]	µg/L	Grab	1/Semi-Annual Period	[1]
Bis(2-chloroethoxy)methane [2]	µg/L	Grab	1/Semi-Annual Period	[1]
Bis(2-chloroisopropyl)ether [2]	µg/L	Grab	1/Semi-Annual Period	[1]

TENTATIVE

Parameter	Units	Sample Type	Minimum Sampling Frequency	Required Analytical Test Method
Di-n-butyl Phthalate [2]	µg/L	Grab	1/Semi-Annual Period	[1]
Dichlorobenzenes [2, 6]	µg/L	Grab	1/Semi-Annual Period	[1]
Bis(2-chloroethyl)ether [2]	µg/L	Grab	1/Semi-Annual Period	[1]
1,4-Dichlorobenzene [2]	µg/L	Grab	1/Semi-Annual Period	[1]
3,3'-Dichlorobenzidene [2]	µg/L	Grab	1/Semi-Annual Period	[1]
2,4-Dinitrotoluene [2]	µg/L	Grab	1/Semi-Annual Period	[1]
1,2-Diphenylhydrazine [2]	µg/L	Grab	1/Semi-Annual Period	[1]
Hexachlorobenzene [2]	µg/L	Grab	1/Semi-Annual Period	[1]
Hexachlorobutadiene [2]	µg/L	Grab	1/Semi-Annual Period	[1]
Hexachloroethane [2]	µg/L	Grab	1/Semi-Annual Period	[1]
Hexachlorocyclopentadiene [2]	µg/L	Grab	1/Semi-Annual Period	[1]
Chlorobenzene [2]	µg/L	Grab	1/Semi-Annual Period	[1]
Chlorodibromomethane [2]	µg/L	Grab	1/Semi-Annual Period	[1]
Chloroform [2]	µg/L	Grab	1/Semi-Annual Period	[1]
Dichlorobromomethane [2]	µg/L	Grab	1/Semi-Annual Period	[1]
Dichloromethane [2]	µg/L	Grab	1/Semi-Annual Period	[1]
1,1-Dichloroethylene [2]	µg/L	Grab	1/Semi-Annual Period	[1]
1,2-Dichloroethane [2]	µg/L	Grab	1/Semi-Annual Period	[1]
1,3-Dichloropropene [2]	µg/L	Grab	1/Semi-Annual Period	[1]
1,1,2,2-Tetrachloroethane [2]	µg/L	Grab	1/Semi-Annual Period	[1]
1,1,1-Trichloroethane [2]	µg/L	Grab	1/Semi-Annual Period	[1]
1,1,2-Trichloroethane [2]	µg/L	Grab	1/Semi-Annual Period	[1]
Tetrachloroethylene [2]	µg/L	Grab	1/Semi-Annual Period	[1]
Trichloroethylene [2]	µg/L	Grab	1/Semi-Annual Period	[1]

TENTATIVE

Parameter	Units	Sample Type	Minimum Sampling Frequency	Required Analytical Test Method
Toxicity-Chronic [7]	TUc	Grab	1/Year	[1]
Vinyl Chloride [2]	µg/L	Grab	1/Year	[1]
Chlordane [2]	µg/L	Grab	1/Year	[1]
Chloroform [2]	µg/L	Grab	1/Year	[1]
Heptachlor [2]	µg/L	Grab	1/Year	[1]
Heptachlor Epoxide [2]	µg/L	Grab	1/Year	[1]
Toxaphene [2]	µg/L	Grab	1/Year	[1]
Phenolic Compounds (non-chlorinated) [2, 8]	µg/L	Grab	1/Year	[1]
Diethylphthalate [2]	µg/L	Grab	1/Year	[1]
Dimethylphthalate [2]	µg/L	Grab	1/Year	[1]
Fluoranthene [2]	µg/L	Grab	1/Year	[1]
Isophorone [2]	µg/L	Grab	1/Year	[1]
Nitrobenzene [2]	µg/L	Grab	1/Year	[1]
Benzidine [2]	µg/L	Grab	1/Year	[1]
N-Nitrosodimethylamine [2]	µg/L	Grab	1/Year	[1]
N-Nitrosodi-n-propylamine [2]	µg/L	Grab	1/Year	[1]
N-Nitrosodiphenylamine [2]	µg/L	Grab	1/Year	[1]
Acrolein [2]	µg/L	Grab	1/Year	[1]
Acrylonitrile [2]	µg/L	Grab	1/Year	[1]
Benzene [2]	µg/L	Grab	1/Year	[1]
Carbon Tetrachloride [2]	µg/L	Grab	1/Year	[1]
Ethylbenzene [2]	µg/L	Grab	1/Year	[1]
Halomethanes [2, 9]	µg/L	Grab	1/Year	[1]
Toluene [2]	µg/L	Grab	1/Year	[1]
Antimony [2]	µg/L	Grab	1/Year	[1]
Beryllium [2]	µg/L	Grab	1/Year	[1]
Thallium [2]	µg/L	Grab	1/Year	[1]
DDT [2, 10]	µg/L	Grab	1/ 2 Years	[1]
Endosulfan [2, 11]	µg/L	Grab	1/ 2 Years	[1]
Dieldrin [2]	µg/L	Grab	1/ 2 Years	[1]
Endrin [2]	µg/L	Grab	1/ 2 Years	[1]
HCH [2, 12]	µg/L	Grab	1/ 2 Years	[1]
PAHs [2, 13]	µg/L	Grab	1/ 2 Years	[1]
PCBs [2, 14]	µg/L	Grab	1/ 2 Years	[1]
Aldrin [2]	µg/L	Grab	1/ 2 Years	[1]
TCDD Equivalents [2,15]	µg/L	Grab	1/ 5 Years	[1]

[1] Pollutants shall be analyzed using the analytical methods described in Part 136; for priority pollutants the methods must meet the lowest minimum levels (MLs) specified in Attachment G of this Order; Appendix II of the California Ocean Plan. Where no methods are specified for a given pollutant, the methods must be approved by this Regional Water Board or the State Water Board.

TENTATIVE

[2] The mass emission (lbs/day) for the discharge shall be calculated and reported using the measured concentration and the actual flow rate measured at the time of discharge, using the formula.

$$m = 0.00834 \times Ce \times Q$$

where: m = mass discharge for a pollutant, lbs/day
Ce = measured concentration for a pollutant, µg/L
Q = actual discharge flow rate, mgd

[3] Weekly samples shall be collected during the first two years of this permit. If the results of the analyses of the samples collected meet the requirements for two years, the frequency of monitoring may be changed to monthly. If subsequently, there is an exceedance of the effluent limitation, the frequency reverts to weekly until compliance with the effluent limitation is demonstrated.

[4] Monthly samples shall be collected during the filter backwash (with calcium carbonate) and one sample in each quarter shall be collected when Reverse Osmosis (RO) units are chlorinated and dechlorinated and wastewater discharged with brine.

[5] Chlorinated Phenolic Compounds shall mean the sum of 2-Chlorophenol, 2,4-Dichlorophenol, 4-Chloro-3-Methylphenol, 2,4,6-Trichlorophenol, and Pentachlorophenol.

[6] Dichlorobenzenes shall mean the sum of 1,2- and 1,3-Dichlorobenzene.

[7] Refer to Section V, Whole Effluent Toxicity Testing Requirements.

[8] Nonchlorinated Phenolic Compounds shall mean the sum of Phenol, 2,4-Dimethylphenol, 2-Nitrophenol, 4-Nitrophenol, 2,4-Dinitrophenol, and 4,6-Dinitro-2-Methylphenol.

[9] Halomethanes shall mean the sum of Bromoform, Bromomethane (Methyl Chloride), and Chloromethane (Methyl Chloride).

[10] DDT shall mean the sum of 4,4'-DDT, 2,4'-DDT, 4,4'-DDE, 2,4'-DDE, 4,4'-DDD, and 2,4'-DDD.

[11] Endosulfan shall mean the sum of Endosulfan-alpha, Endosulfan-beta, and Endosulfan Sulfate.

[12] HCH shall mean the sum of alpha, beta, gamma (Lindane), and delta isomers of hexachlorocyclohexane.

[13] PAHs shall mean the sum of acenaphthylene, anthracene, 1,2-benzanthracene, 3,4-benzofluoranthene, benzo(k)fluoranthene, 1,12-benzoperylene, benzo(a)pyrene, chrysene, dibenzo(a,h)anthracene, fluorene, indeno(1,2,3-cd)pyrene, phenanthrene, and pyrene.

[14] PCBs shall mean the sum of chlorinated biphenyls whose analytical characteristics resemble those of Aroclor-1016, Aroclor-1221, Aroclor-1232, Aroclor-1242, Aroclor-1248, Aroclor-1254, and Aroclor-1260.

[15] TCDD Equivalents shall mean the sum of the concentrations of chlorinated dibenzodioxins (2,3,7,8-CDDs) and chlorinated dibenzofurans (2,3,7,8-CDFs) multiplied by their respective toxicity factors, as shown in the table below.

Isomer Group	Toxicity Equivalence Factor
2,3,7,8-tetra CDD	1.0
2,3,7,8-penta CDD	0.5
2,3,7,8-hexa CDDs	0.1
2,3,7,8-hepta CDD	0.01
octa CDD	0.001
2,3,7,8 tetra CDF	0.1
1,2,3,7,8 penta CDF	0.05
2,3,4,7,8 penta CDF	0.5
2,3,7,8 hexa CDFs	0.1
2,3,7,8 hepta CDFs	0.01
octa CDF	0.001

TENTATIVE

b. Effluent monitoring for wastewater from flushing the seawater supply pipeline:

Table E-3. Effluent Monitoring (Flushing Activity), Monitoring Location EFF-001

Parameter	Units	Sample Type	Minimum Sampling Frequency	Required Analytical Test Method
Flow	gpd	Continuous	1/Day	--
Temperature	°F	Grab	1/Discharge Event	[1]
Oil and Grease [2]	mg/L	Grab	1/Discharge Event	[1]
pH	Standard Units	Grab	1/Discharge Event	[1]
Total Suspended Solids [2]	mg/L	Grab	1/Discharge Event	[1]
Settleable Solids	Ml/L	Grab	1/Discharge Event	[1]
Turbidity	NTU	Grab	1/Discharge Event	[1]
Biochemical Oxygen Demand (BOD_5@20°C) [2]	mg/L	Grab	1/Discharge Event	[1]
Total coliform	MPN/100 ml	grab	1/Discharge Event	[1]
Fecal coliform	MPN/100 ml	grab	1/Discharge Event	[1]
Enterococcus	MPN/100 ml	grab	1/Discharge Event	[1]
Copper, Total Recoverable [2]	µg/L	Grab	1/Discharge Event	[1]
Zinc, Total Recoverable [2]	µg/L	Grab	1/Discharge Event	[1]
Bis(2-ethylhexyl)Phthalate [2]	µg/L	Grab	1/Discharge Event	[1]
Tributyltin [2]	µg/L	Grab	1/Discharge Event	[1]
Toxicity-Chronic [3]	TUc	Grab	1/Year	[1]
Remaining Priority Pollutants [2]	µg/L	Grab	1/Year	[1]

[1] Pollutants shall be analyzed using the analytical methods described in Part 136; for priority pollutants the methods must meet the lowest minimum levels (MLs) specified in Attachment G of this Order; Appendix II of the California Ocean Plan. Where no methods are specified for a given pollutant, the methods must be approved by this Regional Water Board or the State Water Board.

[2] The mass emission (lbs/day) for the discharge shall be calculated and reported using the measured concentration and the actual flow rate measured at the time of discharge, using the formula.

$$m = 0.00834 \times Ce \times Q$$

where: m = mass discharge for a pollutant, lb/day
Ce = measured concentration for a pollutant, µg/L
Q = actual discharge flow rate, mgd

[3] Refer to Section V, Whole Effluent Toxicity Testing Requirements.

TENTATIVE

V. WHOLE EFFLUENT TOXICITY TESTING REQUIREMENTS

A. Definition of Toxicity

1. Chronic Toxicity.

Chronic toxicity measures a sub-lethal effect (e.g., reduced growth, reproduction) to experimental test organisms exposed to an effluent or ambient waters compared to that of the control organisms. Chronic toxicity shall be measured in TU_c, where TU_c = 100/NOEC. The No Observable Effect Concentration (NOEC) is expressed as the maximum percent effluent concentration that causes no observable effect on test organisms, as determined by the results of a critical life stage toxicity test.

This Order includes a chronic testing toxicity trigger defined as an exceedance of 6.0 TU_c in a critical life stage test for 100% effluent. (The daily maximum for chronic toxicity of 100% effluent shall not exceed, 6 TU_c in a critical life stage test.)

B. Chronic Toxicity Effluent Monitoring Program

1. Effluent samples shall be collected after all treatment processes and before discharge to the receiving water.

2. Test Species and Methods

a. The Discharger shall conduct critical life stage chronic toxicity tests on effluent samples (grab) or receiving water samples in accordance with USEPA's *Short Term Methods for Estimating the Chronic Toxicity of Effluents and Receiving Waters to Marine and Estuarine Organisms*, Third Edition, October 2002, (EPA/821/R-02-014), or a more recent edition.

b. The Discharger shall conduct tests as follows: with a vertebrate, an invertebrate, and an aquatic plant for the first three suites of tests. After the screening period, monitoring shall be conducted using the most sensitive species.

c. Re-screening is required every 15 months. The Discharger shall re-screen with the three species listed above and continue to monitor with the most sensitive species. If the first suite of re-screening tests demonstrates that the same species is the most sensitive then re-screening does not need to include more than one suite of tests. If a different species is the most sensitive or if there is ambiguity then the Discharger shall proceed with suites of screening tests for a minimum of three, but not to exceed five suites.

d. The presence of chronic toxicity shall be estimated as specified using West Coast marine organisms according to USEPA's Short-Term Methods for Estimating Chronic Toxicity of Effluent and Receiving Waters to West Coast

TENTATIVE

Marine and Estuarine Organisms, August 1995 (EPA/600/R-95/136), or a more recent edition.

C. Quality Assurance

1. Concurrent testing with a reference toxicant shall be conducted. Reference toxicant tests shall be conducted using the same test conditions as the effluent toxicity tests (e.g., same test duration, etc).

2. If either the reference toxicant test or effluent test does not meet all test acceptability criteria (TAC) as specified in the test methods manuals (EPA/600/4-91/002 and EPA/821-R-02-014), then the Discharger must re-sample and re-test at the earliest time possible.

3. Control and dilution water should be receiving water or laboratory water, as appropriate, as described in the manual. If the dilution water used is different from the culture water, a second control using culture water shall be used.

D. Preparation of an Initial Investigation TRE Workplan

The Discharger shall prepare and submit a copy of the Discharger's Initial Investigation Toxicity Reduction Evaluation (TRE) workplan to he Executive Officer of the Regional Water Board for approval **within 90 days** of the effective date of this permit. If the Executive Officer does not disapprove the workplan within 60 days, the workplan shall become effective. The Discharger shall use USEPA manuals EPA/600/2-88/070 (industrial) or EPA/833B-99/002 (municipal) as guidance. This workplan shall describe the steps the Discharger intends to follow if toxicity is detected, and should include, at a minimum:

1. A description of the investigation and evaluation techniques that will be used to identify potential causes and sources of toxicity, effluent variability, and treatment system efficiency.

2. A description of the Facility's methods of maximizing in-house treatment efficiency and good housekeeping practices, and a list of all chemicals used in the operation of the Facility; and,

3. If a Toxicity Identification Evaluation (TIE) is necessary, an indication of the person who would conduct the TIEs (i.e., an in-house expert or an outside contractor). See MRP Section V.F.3., for guidance manuals.

E. Accelerated Monitoring

1. If the results of a toxicity test exceed the chronic toxicity trigger (as defined below):

Chronic Toxicity:

(a) This Order includes a chronic testing toxicity trigger defined as an exceedance of 6.0 TU_c in a critical life stage test for 100% effluent. (The daily maximum for

TENTATIVE

chronic toxicity of 100% effluent shall not exceed, 6 TU_c in a critical life stage test.)

then, the Discharger shall begin the investigation and evaluation as specified in the Discharger's Initial Investigation TRE Workplan and begin accelerated monitoring by conducting six additional tests, approximately every month, over a 6-month period. The samples shall be collected and the tests initiated no less than 7 days apart. The Discharger shall ensure that they receive results of a failing toxicity test within 24 hours of the completion of the test and the additional tests shall begin within 3 business days of receipt of the results.

2. If implementation of the initial investigation TRE Workplan indicates the source of toxicity, then the Discharger may discontinue the Initial Investigation Toxicity Reduction Evaluation and resume routine testing frequency.

3. The first step in the initial Investigation TRE Workplan for downstream receiving water toxicity can be a toxicity test protocol designed to determine if the effluent from Discharge Point No. 001 causes or contributes to the measured downstream chronic toxicity. If this first step TRE testing shows that the Discharge Point No. 001 effluent does not cause or contribute to downstream chronic toxicity, using USEPA's Short-Term Methods for Estimating the Chronic Toxicity of Effluents and Receiving Waters to Freshwater Organisms, Fourth Edition, October 2002 (EPA/821-R-02-013) then a report on this testing shall be submitted to the Regional Water Board and the TRE will be considered to be completed. Routine testing in accordance with MRP shall be continued thereafter.

F. Steps in Toxicity Reduction Evaluation (TRE) and Toxicity Identification Evaluation (TIE)

1. If the results of the implementation of the Facility's Initial Investigation TRE workplan indicate the need to continue the TRE/TIE, the Discharger shall expeditiously develop a more detailed TRE workplan for submittal to the Executive Officer within 30 days of completion of the Initial Investigation TRE. The detailed workplan shall include, but not be limited to:

a. Further actions to investigate and identify the cause of toxicity;

b. Actions the Discharger will take to mitigate the impact of the discharge and prevent the recurrence of toxicity; and

c. A schedule for these actions.

2. The following section summarizes the stepwise approach used in conducting the TRE:

a. Step 1 includes basic data collection. Data collected for the accelerated monitoring requirements may be used to conduct the TRE.

TENTATIVE

b. Step 2 – Evaluates optimization of the treatment system operation, facility housekeeping, and the selection and use of in-plant process chemicals;

c. If Steps 1 and 2 are unsuccessful, Step 3 implements TIE and employment of all reasonable efforts using currently available TIE methodologies. The objective of the TIE shall be to identify the substance or combination of substances causing the observed toxicity;

d. Assuming successful identification or characterization of the toxicant(s), Step 4 evaluates final effluent treatment options;

e. Step 5 evaluates in-plant treatment options; and,

f. Step 6 consists of confirmation once a toxicity control method has been implemented.

Many recommended TRE elements parallel source control, pollution prevention, and storm water control program best management practices (BMPs). To prevent duplication of efforts, evidence of compliance with those requirements may be sufficient to comply with TRE requirements. By requiring the first steps of a TRE to be accelerated testing and review of the Facility's TRE workplan, a TRE may be ended in its early stages. All reasonable steps shall be taken to reduce toxicity to the required level. The TRE may be ended at any stage if monitoring indicates there is no longer toxicity (or six consecutive chronic toxicity test results are less than or equal to 6.0 TU_c or six consecutive acute toxicity test results are greater than 90% survival).

3. The Discharger shall initiate a TIE as part of the TRE process to identify the cause(s) of toxicity. The Discharger shall use the USEPA acute manual, chronic manual, EPA/600/6-91/005F (Phase I)/EPA/600/R-96-054 (for marine), EPA/600/R-92/080 (Phase II), and EPA/600/R-92/081 (Phase III) as guidance.

4. If a TRE/TIE is initiated prior to completion of the accelerated testing schedule required in Section V.E of this MRP, then the accelerated testing schedule may be terminated, or used as necessary in performing the TRE/TIE, as determined by the Executive Officer.

5. Toxicity tests conducted as part of a TRE/TIE may also be used for compliance determination, if appropriate.

6. The Regional Water Board recognizes that toxicity may be episodic and identification of causes of and reduction of sources of toxicity may not be successful in all cases. Consideration of enforcement action by the Regional Water Board will be based in part, on the Discharger's actions and efforts to identify and control or reduce sources of consistent toxicity.

TENTATIVE

G. Ammonia Removal

1. Except with prior approval from the Executive Officer of the Regional Water Board, ammonia shall not be removed from bioassay samples. The Discharger must demonstrate the effluent toxicity is caused by ammonia *because of* increasing test pH when conducting the toxicity test. It is important to distinguish the potential toxic effects of ammonia from other pH-sensitive chemicals, such as certain heavy metals, sulfide, and cyanide. The following may be steps to demonstrate that the toxicity is caused by ammonia and not other toxicants before the Executive Officer would allow for control of pH in the test.

a. There is consistent toxicity in the effluent and the maximum pH in the toxicity test is in the range to cause toxicity due to increased pH.

b. Chronic ammonia concentrations in the effluent are greater than 4 mg/L total ammonia.

c. Conduct graduated pH tests as specified in the TIE methods. For example, mortality should be higher at pH 8 and lower at pH 6.

d. Treat the effluent with a zeolite column to remove ammonia. Mortality in the zeolite-treated effluent should be lower than the non-zeolite-treated effluent. Then add ammonia back to the zeolite-treated samples to confirm toxicity due to ammonia.

2. When it has been demonstrated that toxicity is due to ammonia because of increasing test pH, pH may be controlled using appropriate procedures which do not significantly alter the nature of the effluent, after submitting a written request to the Regional Water Board, and receiving written permission expressing approval from the Executive Officer of the Regional Water Board.

H. Reporting

The Discharger shall submit a full report of the toxicity test results, including any accelerated testing conducted during the month as required by this permit. Test results shall be reported in Chronic Toxicity Units (TU_c) as required, with the self-monitoring reports (SMR) for the month in which the test is conducted. If an initial investigation indicates the source of toxicity and accelerated testing is unnecessary, then those results also shall be submitted with the SMR for the period in which the investigation occurred.

If an initial investigation indicates the source of toxicity and accelerated testing is unnecessary, pursuant to Section V.E., then those results also shall be submitted with the SMR for the period in which the investigation occurred.

1. The full report shall be submitted on or before the end of the month in which the SMR is submitted.

TENTATIVE

2. The full report shall consist of (1) the results; (2) the dates of sample collection and initiation of each toxicity test; (3) the chronic toxicity limit or trigger and (4) printout of the ToxCalc or CETIS (Comprehensive Environmental Toxicity Information System) program results.

3. Test results for toxicity tests also shall be reported according to the appropriate manual chapter on Report Preparation and shall be attached to the SMR. Routine reporting shall include, at a minimum, as applicable, for each test:

a. Sample date(s);

b. Test initiation date;

c. Test species;

d. End point values for each dilution (e.g., number of young, growth rate, percent survival);

e. NOEC value(s) in percent effluent;

f. IC_{15}, IC_{25}, IC_{40} and IC_{50} values in percent effluent;

g. Mean percent mortality (+standard deviation) after 96 hours in 100% effluent (if applicable);

h. NOEC and LOEC values for reference toxicant test(s);

i. IC_{25} value for reference toxicant test(s);

j. Any applicable charts; and

k. Available water quality measurements for each test (e.g., pH, D.O., temperature, conductivity, hardness, salinity, ammonia).

4. The Discharger shall provide a compliance summary, which includes a summary table of toxicity data from all samples collected during that year.

The Discharger shall notify by telephone or electronically, this Regional Water Board of any toxicity exceedance of the limit or trigger within 24 hours of receipt of the results followed by a written report within 14 calendar days of receipt of the results. The verbal or electronic notification shall include the exceedance and the plan the Discharger has taken or will take to investigate and correct the cause(s) of toxicity. It may also include a status report on any actions required by the permit, with a schedule for actions not yet completed. If no actions have been taken, the reasons shall be given.

TENTATIVE

VI. LAND DISCHARGE MONITORING REQUIREMENTS – NOT APPLICABLE

VII. RECLAMATION MONITORING REQUIREMENTS – NOT APPLICABLE

VIII. RECEIVING WATER MONITORING REQUIREMENTS – SURFACE WATER AND GROUNDWATER

A. Monitoring Location RSW-001

1. The Discharger shall monitor the Pacific Ocean at Monitoring Location RSW-001 as follows:

Table E-4. Receiving Water Monitoring Requirements – RSW-001

Parameter	Units	Sample Type	Minimum Sampling Frequency	Required Analytical Test Method
Temperature	°F	Grab	1/Quarter	[1]
pH	Standard Units	Grab	1/Quarter	[1]
Arsenic, Total Recoverable	µg/L	Grab	1/Semi-Annual Period [2]	[1]
Cadmium, Total Recoverable	µg/L	Grab	1/Semi-Annual Period [2]	[1]
Chromium III	µg/L	Grab	1/Semi-Annual Period [2]	[1]
Chromium VI	µg/L	Grab	1/Semi-Annual Period [2]	[1]
Copper, Total Recoverable	µg/L	Grab	1/Semi-Annual Period [2]	[1]
Lead, Total Recoverable	µg/L	Grab	1/Semi-Annual Period [2]	[1]
Mercury, Total Recoverable	µg/L	Grab	1/Semi-Annual Period [2]	[1]
Nickel, Total Recoverable	µg/L	Grab	1/Semi-Annual Period [2]	[1]
Selenium, Total Recoverable	µg/L	Grab	1/Semi-Annual Period [2]	[1]
Silver, Total Recoverable	µg/L	Grab	1/Semi-Annual Period [2]	[1]
Zinc, Total Recoverable	µg/L	Grab	1/Semi-Annual Period [2]	[1]
Bis(2-ethylhexyl)Phthalate	µg/L	Grab	1/Semi-Annual Period [2]	[1]
Tributyltin	µg/L	Grab	1/Semi-Annual Period [2]	[1]
Total coliform	MPN/100 ml	grab	1/Semi-Annual Period [2]	[1]
Fecal coliform	MPN/100 ml	grab	1/Semi-Annual Period [2]	[1]
Enterococcus	MPN/100 ml	grab	1/Semi-Annual Period [2]	[1]
Methylene Blue Activated Substances (MBAS)	mg/L	Grab	1/Year	[1]
Methyl Tertiary Butyl Ether (MTBE)	µg/L	Grab	1/Year	[1]
2,4-Dinitrophenol	µg/L	Grab	1/Year	[1]
2,4,6-Trichlorophenol	µg/L	Grab	1/Year	[1]
4,6-Dinitro-2-methylphenol	µg/L	Grab	1/Year	[1]
Phenolic Compounds (chlorinated) [3]	µg/L	Grab	1/Year	[1]
Bis(2-chloroethoxy)methane	µg/L	Grab	1/Year	[1]
Bis(2-chloroisopropyl)ether	µg/L	Grab	1/Year	[1]
Di-n-butyl Phthalate	µg/L	Grab	1/Year	[1]
Dichlorobenzenes [4]	µg/L	Grab	1/Year	[1]
Bis(2-chloroethyl)ether	µg/L	Grab	1/Year	[1]
1,4-Dichlorobenzene	µg/L	Grab	1/Year	[1]

TENTATIVE

Parameter	Units	Sample Type	Minimum Sampling Frequency	Required Analytical Test Method
3,3'-Dichlorobenzidene	µg/L	Grab	1/Year	[1]
2,4-Dinitrotoluene	µg/L	Grab	1/Year	[1]
1,2-Diphenylhydrazine	µg/L	Grab	1/Year	[1]
Hexachlorobenzene	µg/L	Grab	1/Year	[1]
Hexachlorobutadiene	µg/L	Grab	1/Year	[1]
Hexachloroethane	µg/L	Grab	1/Year	[1]
Hexachlorocyclopentadiene	µg/L	Grab	1/Year	[1]
Chlorobenzene	µg/L	Grab	1/Year	[1]
Chlorodibromomethane	µg/L	Grab	1/Year	[1]
Chloroform	µg/L	Grab	1/Year	[1]
Dichlorobromomethane	µg/L	Grab	1/Year	[1]
Dichloromethane	µg/L	Grab	1/Year	[1]
1,1-Dichloroethylene	µg/L	Grab	1/Year	[1]
1,2-Dichloroethane	µg/L	Grab	1/Year	[1]
1,3-Dichloropropene	µg/L	Grab	1/Year	[1]
1,1,2,2-Tetrachloroethane	µg/L	Grab	1/Year	[1]
1,1,1-Trichloroethane	µg/L	Grab	1/Year	[1]
1,1,2-Trichloroethane	µg/L	Grab	1/Year	[1]
Tetrachloroethylene	µg/L	Grab	1/Year	[1]
Trichloroethylene	µg/L	Grab	1/Year	[1]
Vinyl Chloride	µg/L	Grab	1/Year	[1]
Chlordane	µg/L	Grab	1/Year	[1]
Chloroform	µg/L	Grab	1/Year	[1]
Heptachlor	µg/L	Grab	1/Year	[1]
Heptachlor Epoxide	µg/L	Grab	1/Year	[1]
Toxaphene	µg/L	Grab	1/Year	[1]
Phenolic Compounds (non-chlorinated) [5]	µg/L	Grab	1/Year	[1]
Diethylphthalate	µg/L	Grab	1/Year	[1]
Dimethylphthalate	µg/L	Grab	1/Year	[1]
Fluoranthene	µg/L	Grab	1/Year	[1]
Isophorone	µg/L	Grab	1/Year	[1]
Nitrobenzene	µg/L	Grab	1/Year	[1]
Benzidine	µg/L	Grab	1/Year	[1]
N-Nitrosodimethylamine	µg/L	Grab	1/Year	[1]
N-Nitrosodi-n-propylamine	µg/L	Grab	1/Year	[1]
N-Nitrosodiphenylamine	µg/L	Grab	1/Year	[1]
Acrolein	µg/L	Grab	1/Year	[1]
Acrylonitrile	µg/L	Grab	1/Year	[1]
Benzene	µg/L	Grab	1/Year	[1]
Carbon Tetrachloride	µg/L	Grab	1/Year	[1]
Ethylbenzene	µg/L	Grab	1/Year	[1]

TENTATIVE

Parameter	Units	Sample Type	Minimum Sampling Frequency	Required Analytical Test Method
Halomethanes [6]	µg/L	Grab	1/Year	[1]
Toluene	µg/L	Grab	1/Year	[1]
Antimony	µg/L	Grab	1/Year	[1]
Beryllium	µg/L	Grab	1/Year	[1]
Thallium	µg/L	Grab	1/Year	[1]
Toxicity-Chronic [7]	TUc	Grab	1/Year	[1]
DDT [8]	µg/L	Grab	1/ 2 Years	[1]
Endosulfan [9]	µg/L	Grab	1/ 2 Years	[1]
Dieldrin	µg/L	Grab	1/ 2 Years	[1]
Endrin	µg/L	Grab	1/ 2 Years	[1]
HCH [10]	µg/L	Grab	1/ 2 Years	[1]
PAHs [11]	µg/L	Grab	1/ 2 Years	[1]
PCBs [12]	µg/L	Grab	1/ 2 Years	[1]
Aldrin	µg/L	Grab	1/ 2 Years	[1]
TCDD Equivalents [13]	µg/L	Grab	1/ 5 Years	[1]

[1] Pollutants shall be analyzed using the analytical methods described in Part 136; for priority pollutants the methods must meet the lowest minimum levels (MLs) specified in Attachment G of this Order; Appendix II of the California Ocean Plan. Where no methods are specified for a given pollutant, the methods must be approved by this Regional Water Board or the State Water Board.

[2] Receiving water samples must be analyzed at the same time the effluent samples from the flushing activity are collected for analysis during one semi-annual period.

[3] Chlorinated Phenolic Compounds shall mean the sum of 2-Chlorophenol, 2,4-Dichlorophenol, 4-Chloro-3-Methylphenol, 2,4,6-Trichlorophenol, and Pentachlorophenol.

[4] Dichlorobenzenes shall mean the sum of 1,2- and 1,3-Dichlorobenzene.

[5] Nonchlorinated Phenolic Compounds shall mean the sum of Phenol, 2,4-Dimethylphenol, 2-Nitrophenol, 4-Nitrophenol, 2,4-Dinitrophenol, and 4,6-Dinitro-2-Methylphenol.

[6] Halomethanes shall mean the sum of Bromoform, Bromomethane (Methyl Chloride), and Chloromethane (Methyl Chloride).

[7] Refer to Section V, Whole Effluent Toxicity Testing Requirements.

[8] DDT shall mean the sum of 4,4'-DDT, 2,4'-DDT, 4,4'-DDE, 2,4'-DDE, 4,4'-DDD, and 2,4'-DDD.

[9] Endosulfan shall mean the sum of Endosulfan-alpha, Endosulfan-beta, and Endosulfan Sulfate.

[10] HCH shall mean the sum of alpha, beta, gamma (Lindane), and delta isomers of hexachlorocyclohexane.

[11] PAHs shall mean the sum of acenaphthylene, anthracene, 1,2-benzanthracene, 3,4-benzofluoranthene, benzo(k)fluoranthene, 1,12-benzoperylene, benzo(a)pyrene, chrysene, dibenzo(a,h)anthracene, fluorene, indeno(1,2,3-cd)pyrene, phenanthrene, and pyrene.

[12] PCBs shall mean the sum of chlorinated biphenyls whose analytical characteristics resemble those of Aroclor-1016, Aroclor-1221, Aroclor-1232, Aroclor-1242, Aroclor-1248, Aroclor-1254, and Aroclor-1260.

TENTATIVE

[13] TCDD Equivalents shall mean the sum of the concentrations of chlorinated dibenzodioxins (2,3,7,8-CDDs) and chlorinated dibenzofurans (2,3,7,8-CDFs) multiplied by their respective toxicity factors, as shown in the table below.

Isomer Group	Toxicity Equivalence Factor
2,3,7,8-tetra CDD	1.0
2,3,7,8-penta CDD	0.5
2,3,7,8-hexa CDDs	0.1
2,3,7,8-hepta CDD	0.01
octa CDD	0.001
2,3,7,8 tetra CDF	0.1
1,2,3,7,8 penta CDF	0.05
2,3,4,7,8 penta CDF	0.5
2,3,7,8 hexa CDFs	0.1
2,3,7,8 hepta CDFs	0.01
octa CDF	0.001

B. Visual Monitoring of the Receiving Water Sampling Point

1. A visual observation station shall be established in the vicinity of the discharge point to the receiving water.

2. General observations of the receiving water shall be made at each discharge point when discharges occur. During periods of no discharge, the receiving water observations shall be made on a quarterly basis. All receiving water observations shall be reported in the quarterly monitoring report. If no discharge occurred during the observation period, this shall be reported. Observations shall be descriptive where applicable, such that colors, approximate amounts, or types of materials present. The following observations shall be made:

a. Tidal stage, time, and date of monitoring

b. Weather conditions

c. Color of water

d. Appearance of oil films or grease, or floatable materials

e. Extent of visible turbidity or color patches

f. Direction of tidal flow

g. Description of odor, if any, of the receiving water

h. Presence and activity of California Least Tern and California Brown Pelican.

TENTATIVE

IX. OTHER MONITORING REQUIREMENTS – NOT APPLICABLE

X. REPORTING REQUIREMENTS

A. General Monitoring and Reporting Requirements

1. The Discharger shall comply with all Standard Provisions (Attachment D) related to monitoring, reporting, and recordkeeping.

2. If there is no discharge during any reporting period, the report shall so state.

3. Each monitoring report shall contain a separate section titled "Summary of Non-Compliance" which discusses the compliance record and corrective actions taken or planned that may be needed to bring the discharge into full compliance with waste discharge requirements. This section shall clearly list all non-compliance with waste discharge requirements, as well as all excursions of effluent limitations.

4. The Discharger shall inform the Regional Water Board well in advance of any proposed construction activity that could potentially affect compliance with applicable requirements.

5. The Discharger shall report the results of chronic toxicity testing, TRE and TIE as required in the Attachment E, Monitoring and Reporting, Section V.H.

B. Self Monitoring Reports (SMRs)

1. The Discharger shall electronically submit SMR's using the State Water Board's California Integrated Water Quality System (CIWQS) Program Web site **(http://www.waterboards.ca.gov/ciwqs/index.html)**. The CIWQS Web site will provide additional information for SMR submittal in the event there will be a planned service interruption for electronic submittal.

2. The Discharger shall report in the SMR the results for all monitoring specified in this MRP under sections III through IX. The Discharger shall submit quarterly SMRs including the results of all required monitoring using USEPA-approved test methods or other test methods specified in this Order. If the Discharger monitors any pollutant more frequently than required by this Order, the results of this monitoring shall be included in the calculations and reporting of the data submitted in the SMR.

3. Monitoring periods and reporting for all required monitoring shall be completed according to the following schedule:

TENTATIVE

Table E-5. Monitoring Periods and Reporting Schedule

Sampling Frequency	Monitoring Period Begins On…	Monitoring Period	SMR Due Date
Continuous	November 7, 2011	January 1 through March 31 April 1 through June 30 July 1 through September 30 October 1 through December 31	May 1 August 1 November 1 February 1
1 / Day	November 7, 2011	(Midnight through 11:59 PM) or any 24-hour period that reasonably represents a calendar day for purposes of sampling.	May 1 August 1 November 1 February 1
1/Discharge Event	November 7, 2011	January 1 through March 31 April 1 through June 30 July 1 through September 30 October 1 through December 31	May 1 August 1 November 1 February 1
1 / Month	November 7, 2011	1st day of calendar month through last day of calendar month	May 1 August 1 November 1 February 1
1 / Quarter	November 7, 2011	January 1 through March 31 April 1 through June 30 July 1 through September 30 October 1 through December 31	May 1 August 1 November 1 February 1
1 / Semi-annual period	November 7, 2011	January 1 through June 30 July 1 through December 31	May 1 August 1 November 1 February 1
1 / Year	November 7, 2011	January 1 through December 31	February 1

4. Reporting Protocols. The Discharger shall report with each sample result the applicable reported Minimum Level (ML) and the current Method Detection Limit (MDL), as determined by the procedure in Part 136.

5. The Discharger shall report the results of analytical determinations for the presence of chemical constituents in a sample using the following reporting protocols:

a. Sample results greater than or equal to the reported ML shall be reported as measured by the laboratory (i.e., the measured chemical concentration in the sample).

b. Sample results less than the RL, but greater than or equal to the laboratory's MDL, shall be reported as "Detected, but Not Quantified," or DNQ. The estimated chemical concentration of the sample shall also be reported.

For the purposes of data collection, the laboratory shall write the estimated chemical concentration next to DNQ as well as the words "Estimated Concentration" (may be shortened to "Est. Conc."). The laboratory may, if such information is available, include numerical estimates of the data quality for the

TENTATIVE

reported result. Numerical estimates of data quality may be percent accuracy (+ a percentage of the reported value), numerical ranges (low to high), or any other means considered appropriate by the laboratory.

c. Sample results less than the laboratory's MDL shall be reported as "Not Detected," or ND.

d. Dischargers are to instruct laboratories to establish calibration standards so that the ML value (or its equivalent if there is differential treatment of samples relative to calibration standards) is the lowest calibration standard. At no time is the Discharger to use analytical data derived from extrapolation beyond the lowest point of the calibration curve.

6. The Discharger shall submit SMRs in accordance with the following requirements:

a. The Discharger shall arrange all reported data in a tabular format. The data shall be summarized to clearly illustrate whether the facility is operating in compliance with interim and/or final effluent limitations. The Discharger is not required to duplicate the submittal of data that is entered in a tabular format within CIWQS. When electronic submittal of data is required and CIWQS does not provide for entry into a tabular format within the system, the Discharger shall electronically submit the data in a tabular format as an attachment.

b. The Discharger shall attach a cover letter to the SMR. The information contained in the cover letter shall clearly identify violations of the WDRs; discuss corrective actions taken or planned; and the proposed time schedule for corrective actions. Identified violations must include a description of the requirement that was violated and a description of the violation.

C. Discharge Monitoring Reports (DMRs)

Not Applicable.

D. Other Reports

1. The Discharger shall report the results of chronic toxicity testing, and TRE/TIE required by Special Provisions – VI.C.2 of this Order. The Discharger shall submit reports with the first quarterly SMR scheduled to be submitted on or immediately following the report due date.

2. Within 90 days of the effective date of this permit, the Discharger is required to submit the following to the Regional Water Board:

a. Initial Investigation TRE workplan

3. This Regional Water Board requires the Discharger to file with the Regional Water Board, within 90 days after the effective date of this Order, a technical report on his preventive (failsafe) and contingency (cleanup) plans for controlling accidental

TENTATIVE

discharges, and for minimizing the effect of such events. The technical report should:

a. Identify the possible sources of accidental loss, untreated waste bypass, and contaminated drainage. Loading and storage areas, power outage, waste treatment unit outage, and failure of process equipment, tanks and pipes should be considered.

b. Evaluate the effectiveness of present facilities and procedures and state when they become operational.

c. Describe facilities and procedures needed for effective preventive and contingency plans.

d. Predict the effectiveness of the proposed facilities and procedures and provide an implementation schedule contingent interim and final dates when they will be constructed, implemented, or operational.

This Regional Water Board, after review of the technical report, may establish conditions which it deems necessary to control accidental discharges and to minimize the effects of such events. Such conditions may be incorporated as part of this Order, upon notice to the Discharger.

TENTATIVE

ATTACHMENT F – FACT SHEET

Table of Contents

I. Permit Information F-3
II. Facility Description F-4
A. Description of Wastewater and Biosolids Treatment or Controls F-6
B. Discharge Points and Receiving Waters F-6
C. Summary of Existing Requirements and Self-Monitoring Report (SMR) Data F-7
D. Compliance Summary F-8
E. Planned Changes F-8
III. Applicable Plans, Policies, and Regulations F-8
A. Legal Authorities F-9
B. California Environmental Quality Act (CEQA) F-9
C. State and Federal Regulations, Policies, and Plans F-9
D. Impaired Water Bodies on CWA 303(d) List F-12
E. Other Plans, Policies and Regulations – Not Applicable F-12
IV. Rationale For Effluent Limitations and Discharge Specifications F-12
A. Discharge Prohibitions F-14
B. Technology-Based Effluent Limitations F-14
1. Scope and Authority F-14
2. Applicable Technology-Based Effluent Limitations F-15
C. Water Quality-Based Effluent Limitations (WQBELs) F-16
1. Scope and Authority F-16
2. Applicable Beneficial Uses and Water Quality Criteria and Objectives F-16
3. Determining the Need for WQBELs F-17
4. WQBEL Calculations F-18
5. Whole Effluent Toxicity (WET) F-20
6. Final WQBELs F-20
D. Final Effluent Limitations F-21
1. Satisfaction of Anti-Backsliding Requirements F-22
2. Satisfaction of Antidegradation Policy F-22
3. Stringency of Requirements for Individual Pollutants F-22
4. Temperature Limitation F-24
E. Interim Effluent Limitations – Not Applicable F-24
F. Land Discharge Specifications – Not Applicable F-24
G. Reclamation Specifications – Not Applicable F-24
V. Rationale for Receiving Water Limitations F-24
A. Surface Water F-24
B. Groundwater – Not Applicable F-24
VI. Rationale for Monitoring and Reporting Requirements F-24
A. Influent Monitoring – Not Applicable F-25
B. Effluent Monitoring F-25
C. Whole Effluent Toxicity Testing Requirements F-25

TENTATIVE

D. Receiving Water Monitoring F-26
1. Surface Water F-26
2. Groundwater – Not Applicable F-26
E. Other Monitoring Requirements – Not Applicable F-26
VII. Rationale for Provisions F-26
A. Standard Provisions F-26
B. Special Provisions F-27
1. Reopener Provisions F-27
2. Special Studies and Additional Monitoring Requirements F-27
3. Construction, Operation, and Maintenance Specifications – Not Applicable F-27
4. Special Provisions for Municipal Facilities (POTWs Only) – Not Applicable F-27
5. Other Special Provisions – Not Applicable F-27
6. Compliance Schedules – Not Applicable F-27
VIII. Public Participation F-27
A. Notification of Interested Parties F-27
B. Written Comments F-28
C. Public Hearing F-28
D. Reconsideration of Waste Discharge Requirements F-28
E. Information and Copying F-29
F. Register of Interested Persons F-29
G. Additional Information F-29

List of Tables

Table F-1. Facility Information F-3
Table F-2. Historic Effluent Limitations and Monitoring Data Discharge Points 001 ..... F-7
Table F-3. Summary of Compliance History F-8
Table F-4. Basin Plan Beneficial Uses F-9
Table F-5. Ocean Plan Beneficial Uses of the Pacific Ocean F-10
Table F-6. Summary of Technology-based Effluent Limitations for Discharge Point 001 . F-15
Table F-7. Ocean Plan Water Quality Objectives F-17
Table F-8. Pollutants with Background Seawater Concentrations F-19
Table F-9. Summary of Water Quality-based Effluent Limitations Discharge Point 001 ... F-20
Table F-10. Summary of Final Effluent Limitations Discharge Point 001 ..... F-23

TENTATIVE

ATTACHMENT F – FACT SHEET

As described in section II of this Order, this Fact Sheet includes the legal requirements and technical rationale that serve as the basis for the requirements of this Order.

This Order has been prepared under a standardized format to accommodate a broad range of discharge requirements for Dischargers in California. Only those sections or subsections of this Order that are specifically identified as "not applicable" have been determined not to apply to this Discharger. Sections or subsections of this Order not specifically identified as "not applicable" are fully applicable to this Discharger.

I. PERMIT INFORMATION

The following table summarizes administrative information related to the Facility.

Table F-1. Facility Information

WDID	4B192111010
Discharger	Southern California Edison Company
Name of Facility	Pebbly Beach Desalination Plant
Facility Address	1 Pebbly Beach Road
	Avalon, CA 90704
	Los Angeles County
Facility Contact, Title and Phone	Ronald Hite, Catalina District Manager
Authorized Person to Sign and Submit Reports	Same as above
Mailing Address	2131 Walnut Grove Avenue, 3rd Floor Rosemead, CA 91770
Billing Address	Same as above
Type of Facility	Industrial, SIC Code 4941
Major or Minor Facility	Minor
Threat to Water Quality	3
Complexity	C
Pretreatment Program	No
Reclamation Requirements	No
Facility Permitted Flow	0.720 million gallons per day (MGD) reverse osmosis brine, filter backwash water, untreated seawater, and wastewater from flushing seawater supply pipeline to control biofilm.
Facility Design Flow	0.720 million gallons per day (MGD) reverse osmosis brine, filter backwash water, untreated seawater, and wastewater from flushing seawater supply pipeline to control biofilm.
Watershed	Pacific Ocean
Receiving Water	Pacific Ocean
Receiving Water Type	Ocean

TENTATIVE

A. Southern California Edison Company (hereinafter SCE or Discharger) is the operator of Pebbly Beach Desalination Plant (hereinafter Facility).

For the purposes of this Order, references to the "discharger" or "permittee" in applicable federal and state laws, regulations, plans, or policy are held to be equivalent to references to the Discharger herein.

B. The Facility discharges wastewater to the Pacific Ocean, a water of the United States, and is currently regulated by Order No. R4-2006-0068, which was adopted on September 14, 2006, and expired on August 10, 2011. The terms and conditions of the current Order have been administratively continued as per 40 Code Federal Regulations (CFR) Part 122.6 and remain in effect until new Waste Discharge Requirements and an NPDES permit are adopted pursuant to this Order.

C. The Discharger filed a report of waste discharge (ROWD) and submitted an application for renewal of its Waste Discharge Requirements (WDRs) and National Pollutant Discharge Elimination System (NPDES) permit on January 28, 2011. Supplemental information was received on June 9, 2011.

On April 25, 2011, and June 23, 2011, site visits were conducted to observe operations and collect additional data to develop permit limitations and conditions.

AMENDMENT TO THE WDRs AND NPDES PERMIT

Recently, Regional Water Board staff discovered an error in Order No. R4-2011-0165. Order No. R4-2011-0165 included mass-based (pounds per day - lbs/day) effluent limitations for biochemical oxygen demand 5-day @ 20°C (BOD) (Average Monthly – 12.01; Maximum Daily – 36.03), total suspended solids (TSS) (Average Monthly – 30.02; Maximum Daily – 90.07), and oil and grease (Average Monthly – 6.01; Maximum Daily – 9.01), which were inadvertently miscalculated. The lbs/day effluent limitations were recalculated and the limits should have been the following: BOD (Average Monthly – 120.1; Maximum Daily – 360.3); TSS (Average Monthly – 300.2; Maximum Daily – 900.7), and oil and grease (Average Monthly – 60.1; Maximum Daily – 90.1). Therefore, this Order amends Order No. R4-2011-0165 to correct the mass-based effluent limitations for BOD, TSS, and oil and grease and incorporate the applicable updates to the permit. This action is in accordance with 40 Code of Federal Regulations (CFR) 122.62(a)(15) which states that:

> "(15) To correct technical mistakes, such as errors in calculation, or mistaken interpretations of law made in determining permit conditions."

TENTATIVE

II. FACILITY DESCRIPTION

SCE constructed the Pebbly Beach Desalination Plant (hereinafter Facility or Plant) in the late 1980s to augment the fresh water supply on Santa Catalina Island during an extended period of drought. The Plant is located within the confines of one of its existing diesel-electric generating station facilities (Pebbly Beach Generating Station) on Pebbly Beach Road, Santa Catalina Island, Los Angeles County. Saltwater is pumped from two shallow wells to the Plant where it is desalinated to produce freshwater. The Discharger

constructed the Facility to produce drinking water from seawater using the reverse osmosis membrane process. The Plant has a freshwater production design capacity of 0.202 MGD. SCE discharges up to 0.720 MGD of reject brine, salt water bypass (untreated seawater), and filter backwash from the desalination process.

SCE owns and operates the Plant which supplies drinking water to the City of Avalon at Santa Catalina Island. The Plant obtains source water from brackish wells on the island and discharges the brine through a rip rap slope to the Pacific Ocean. The only other source of drinking water on Santa Catalina is from rainfall collected in the Thompson Reservoir, or from drinking water being barged to the Island.

In the late 1980s and in the 1990s, the Plant remained idle because of adequate water supply from rainfall and supplemented by other sources. Beginning in 1998, SCE reactivated the Plant at help meet potable water demands at the Island.

Detection of methyl tertiary-butyl ether (MTBE) in 2000 in the old intake source water resulted in SCE's decision to postpone the reactivation of the reverse osmosis facility until another source of seawater supply could be located. It was determined that the main source of MTBE was from the former Chevron gas station located north of the SCE property/plant. The Chevron facility apparently had Underground Storage Tank leaks going back to the 1990s.

Several alternative sources of seawater for the desalination were evaluated based on cost, licensing, reliability, water quality and environmental impacts. The selected option called for construction of conventional source water wells at the remote "Quarry" location. The water from conventional wells (located approximately 75 feet from the shore) would have no entrainment of marine life, and would be filtered by the rock bed. From November 2002 through 2003, two separate wells were installed at the rock quarry, approximately one mile southeast of the Plant. New corrosion-resistant pumps were installed in February 2005 to combat corrosion.

The desalination system consist of two saltwater supply wells (300 gallons per minute capacity each), three multi-media filter units, 16 microfiltration units, four modular reverse osmosis units, chlorination equipment, and a product water storage tank.

In the cover letter of the ROWD dated February 1, 2011, and a follow-up letter dated June 9, 2011, the Discharger requested the Regional Water Board to allow periodic flushing of the seawater supply pipelines to control the presence of biofilm, which attaches to and grows on the inner surface of the pipeline. The control of biofilm will be achieved by increasing the seawater pumping rate to produce a velocity of approximately 5 feet per second for up to a 2-hour period. The Discharger would perform this activity as needed throughout the year but it is anticipated that this activity will be conducted only during the summer months when seawater temperatures increase naturally as the higher temperatures are more conducive to biofilm formation and growth. The Discharger indicated that by performing periodic flushing, filters would last longer and reduce waste. The filters cannot be recycled and must be barged off-Island for disposal as a non-

TENTATIVE

hazardous waste. Further, the pipeline flushing would not cause an increase in discharge flow rates and the Discharger has not requested an increase in permitted flow rates.

This permit allows the Discharger to conduct periodic flushing of the seawater supply pipelines to control the presence of biofilm in conformance with the applicable requirements and provisions in this permit while performing this activity.

A. Description of Wastewater and Biosolids Treatment or Controls

The Discharger does not provide treatment for the reject brine water from the reverse osmosis units. In addition to the reverse osmosis reject brine, the desalination plant's three multi-media filter systems are backwashed monthly with calcium carbonate, resulting in an additional 5,000 gallon discharge, once per month. The backwash water is commingled with the reject brine water prior to discharge. Quarterly, the reverse osmosis units are chlorinated and dechlorinated with sodium metabisulfate and zinc chloride. Approximately 6,000 gallons per year of bisulfate solution is used as a preservative and protectant when the facility is not operating. The bisulfate solution waste is commingled with the reject brine effluent from the other operating units prior to discharge. Hypersperse MDC-120 is used as an anti-scalant in the reverse osmosis process, which results in a concentration of 3 mg/L of the proprietary substance in the brine discharge.

B. Discharge Points and Receiving Waters

The Discharger proposes to discharge up to 0.720 MGD of reject brine water from the reverse osmosis units, filter backwash water from the intake multi-media filter system, untreated seawater, and wastewater from flushing the seawater supply pipeline into the Pacific Ocean, a water of the United States, (Latitude 33° 20' 01.9" North; Longitude 118° 18' 34.7" West).

Dilution Analysis

The brine reject is discharged from the Facility into a concrete trough and cascades from the trough down 15 feet through the rip-rap where it meets the seawater surface. The effluent mixes with the seawater over a horizontal distance of 24 to 42 feet before emerging from the rip-rap at the shoreline. An analysis of dilution for discharges from Pebbly Beach Desalination Plant was previously conducted by the State Water Board using USEPA's Model "Prych, Davis, Shirazi model for Windows" (PDSWIN). PDSWIN was developed to estimate dilution of tributary channels entering into larger water bodies. While the geometry of the Pebbly Beach Desalination Plant discharge is not consistent with the discharge type typically modeled using PDSWIN, the model was selected as the best representation available to staff at the time. The model was configured to estimate dilution commencing at the ocean surface and does not provide any credit for momentum induced mixing as the effluent impinges on the seawater surface. The model also does not take into consideration any wave or tidal action that could increase mixing through turbulent flow within the seawall. For these reasons, the model predictions are expected to be conservative in nature.

TENTATIVE

The variables and assumptions used while modeling the discharge are specified in a letter from the State Water Board to Regional Board Staff dated May 18, 2001, and are maintained in the facility file by the Regional Water Board. The State Water Board found that rapid initial dilution is occurring at the point of discharge. The State Water Board and Regional Water Board, based on the data provided, concluded that a dilution factor of five is applicable for this discharge. The mixing zone is defined as the water column immediately adjacent to and within the rip-rap seawall where initial mixing occurs. The area immediately adjacent the seawall is defined as the portion of ocean waters extending approximately 3 feet from the shoreline.

C. Summary of Existing Requirements and Self-Monitoring Report (SMR) Data

Effluent limitations contained in the existing Order for discharges from Discharge Point 001 (Monitoring Location EFF-001) are as follows:

Table F-2. Historic Effluent Limitations and Monitoring Data Discharge Points 001

Parameter	Units	Effluent Limitation					Monitoring Data
		6-Month Median	Average Monthly	7-Day Average	Maximum Daily	Instantaneous Maximum	Range of Reported Concentrations (January 2007-September 2010)
Effluent Flow	MGD				0.720		0.233 – 0.72
pH	Standard Units	---	---	---	---	6.0 – 9.0	6.42 – 7.9
Biochemical Oxygen Demand (BOD) (5-day @ 20°C)	mg/L	---	20	---	60	---	0.36 - 290
Oil and Grease	mg/L	---	10	---	15	---	All are DNQs
Total Suspended Solids (TSS)	mg/L	---	50	---	150	---	ND – 60
Arsenic, Total Recoverable	µg/L	33	---	---	177	465	0.39 – 2.86
Cadmium, Total Recoverable	µg/L	6	---	---	24	60	0.039 – 0.23
Copper, Total Recoverable	µg/L	8	---	---	62	170	0.42 – 37
Lead, Total Recoverable	µg/L	12	---	---	48	120	0.009 – 0.13
Mercury, Total Recoverable	µg/L	0.24	---	---	0.96	2.4	0.005 – 0.16
Nickel, Total Recoverable	µg/L	30	---	---	120	300	0.021 – 5.1
Selenium, Total Recoverable	µg/L	90	---	---	360	900	0.02 – 5.13

TENTATIVE

Parameter	Units	Effluent Limitation					Monitoring Data
		6-Month Median	Average Monthly	7-Day Average	Maximum Daily	Instantaneous Maximum	Range of Reported Concentrations (January 2007-September 2010)
Silver, Total Recoverable	µg/L	3.4	---	---	16	41.2	0.033 – 0.68
Zinc, Total Recoverable	µg/L	80	---	---	440	1,160	0.791 - 230
Bis(2-ethylhexyl)Phthalate	µg/L	---	21	---	---	---	0.0807 – 14.56
Settleable Solids	ml/L	---	0.1	---	0.30	---	All are ND
Turbidiy	NTU	---	50	100	150	---	ND – 50.3

DNQ = Detected, but not quantified; ND = Not Detected

D. Compliance Summary

Data submitted to the Regional Water Board indicate that the Discharger has exceeded permit limitations for BOD and TSS. A summary of those data is presented in Table F-3, below.

Table F-3. Summary of Compliance History

Date	Monitoring Period	Violation Type	Pollutant	Reported Value	Permit Limitation	Units
7/12/2007	July 2007	Average Monthly	BOD	290	20	mg/L
7/22/2009	July 2009	Average Monthly	TSS	60	50	mg/L

The Discharger indicated in the ROWD that the consistency of non-detects or low concentrations of BOD during the monitoring period from 2006 through 2010 except for the July 12, 2007, monitoring results of 290 mg/L concentration for BOD, indicates that this reported concentration may be sampling or laboratory error.

The 2009 Annual Discharge Monitoring Report indicated that the TSS exceedance during the July 2009 monitoring period was due to laboratory error for not using the appropriate method for saltwater sample analysis for TSS. The laboratory has concurred with the error and begun using the appropriate method for testing the saltwater samples from the Facility.

E. Planned Changes

Not Applicable

III. APPLICABLE PLANS, POLICIES, AND REGULATIONS

The requirements contained in the proposed Order are based on the requirements and authorities described in this section.

TENTATIVE

A. Legal Authorities

This Order is issued pursuant to section 402 of the federal Clean Water Act (CWA) and implementing regulations adopted by the U.S. Environmental Protection Agency (USEPA) and chapter 5.5, division 7 of the California Water Code (commencing with section 13370). It shall serve as an NPDES permit for point source discharges from this facility to surface waters. This Order also serves as Waste Discharge Requirements (WDRs) pursuant to article 4, chapter 4, division 7 of the Water Code (commencing with section 13260).

B. California Environmental Quality Act (CEQA)

Under Water Code section 13389, this action to adopt an NPDES permit is exempt from the provisions of CEQA, Public Resources Code sections 21100 through 21177.

C. State and Federal Regulations, Policies, and Plans

1. **Water Quality Control Plans.** On June 13, 1994, the Regional Water Board adopted a water quality control plan for the Los Angeles Region (hereinafter Basin Plan), as amended, that designates beneficial uses, establishes water quality objectives, and contains implementation programs and policies to achieve those objectives for the Pacific Ocean. In addition, the Basin Plan implements State Water Resources Control Board (State Water Board) Resolution No. 88-63, which established State policy that all waters, with certain exceptions, should be considered suitable or potentially suitable for municipal or domestic supply. Basin Plan beneficial uses applicable to the Pacific Ocean are as follows:

Table F-4. Basin Plan Beneficial Uses

Discharge Point	Receiving Water Name	Beneficial Use(s)
001	Pacific Ocean Nearshore Zone	Industrial Service Supply; Navigation; Water Contact Recreation: Non-Contact Water Recreation; Commercial and Sport Fishing; Marine Habitat; Wild Habitat; Preservation of Biological Habitat; Rare and Endangered Species; Migration of Aquatic Organisms; Spawning, Reproduction, and/or Early Development; and Shellfish Harvesting.

Requirements of this Order implement the Basin Plan. The Basin Plan relies primarily on the requirements of *the Water Quality Control Plan for Ocean Waters of California* (Ocean Plan) for protection of the beneficial uses of the State ocean waters. The Basin Plan, however, may contain additional water quality objectives applicable to the Discharger.

2. **Thermal Plan.** The State Water Board adopted a *Water Quality Control Plan for Control of Temperature in the Coastal and Interstate Water and Enclosed Bays and Estuaries of California* (Thermal Plan) on May 18, 1972, and amended this plan on September 18, 1975. This plan contains temperature objectives for surface waters.

TENTATIVE

The Thermal Plan cites temperature objectives for coastal waters. Requirements of this Order implement the Thermal Plan.

3. **California Ocean Plan.** In 1972, the State Water Board adopted the *Water Quality Control Plan for Ocean Waters of California, California Ocean Plan* (hereinafter Ocean Plan), as amended. The latest amendment became effective on March 10, 2010. The Ocean Plan is applicable, in its entirety, to point source discharges to the ocean waters of the State. Ocean Plan beneficial uses applicable to ocean waters of the State are shown in Table F-5.

Table F-5. Ocean Plan Beneficial Uses of the Pacific Ocean

Discharge Point	Receiving Water Name	Beneficial Uses
001	Pacific Ocean	Industrial Water Supply; Contact and Non-Contact Water Recreation, including Aesthetic Enjoyment; Navigation; Commercial and Sport Fishing; Mariculture; Preservation and Enhancement of Designated Areas of Special Biological Significance (ASBS); Rare and Endangered Species; Marine Habitat; Fish Migration; Fish Spawning and Shellfish Harvesting.

To protect the beneficial uses in ocean water, the Ocean Plan establishes water quality objectives and a program implementation. Requirements of this Order implement the Ocean Plan.

4. **Alaska Rule.** On March 30, 2000, USEPA revised its regulation that specifies when new and revised state and tribal water quality standards (WQS) become effective for CWA purposes (40 C.F.R. § 131.21, 65 Fed. Reg. 24641 (April 27, 2000)). Under the revised regulation (also known as the Alaska rule), new and revised standards submitted to USEPA after May 30, 2000, must be approved by USEPA before being used for CWA purposes. The final rule also provides that standards already in effect and submitted to USEPA by May 30, 2000, may be used for CWA purposes, whether or not approved by USEPA.

7. **Antidegradation Policy.** Section 131.12 requires that the state water quality standards include an antidegradation policy consistent with the federal policy. The State Water Board established California's antidegradation policy in State Water Board Resolution No. 68-16. Resolution No. 68-16 incorporates the federal antidegradation policy where the federal policy applies under federal law. Resolution No. 68-16 requires that existing water quality be maintained unless degradation is justified based on specific findings. The Regional Water Board's Basin Plan implements, and incorporates by reference, both the State and federal antidegradation policies. The permitted discharge must be consistent with the antidegradation provision of section 131.12 and State Water Board Resolution No. 68-16.

TENTATIVE

This permit allows the Discharger to conduct periodic flushing of the seawater supply pipelines to control the presence of biofilm in conformance with the applicable requirements and provisions in this permit.

This permit includes effluent limitations to ensure that the discharge does not adversely impact the beneficial uses of the Pacific Ocean or degrade water quality. The inclusion of the effluent limitations and prohibitions in the NPDES permit, which ensure that any discharge would not result in the lowering of water quality, coupled with the fact that the discharge of wastewater from flushing the seawater supply pipelines occurs periodically, support the conclusion that no degradation will arise as a result of reissuing this permit. The issuance of this permit, therefore, is consistent with the state's antidegradation policy.

8. **Anti-Backsliding Requirements.** Sections 402(o)(2) and 303(d)(4) of the CWA and federal regulations at title 40, Code of Federal Regulations[1] part 122.44(l) prohibit backsliding in NPDES permits. These anti-backsliding provisions require that effluent limitations in a reissued permit must be as stringent as those in the previous permit, with some exceptions in which limitations may be relaxed. Some effluent limitations in this Order are less stringent than those in the previous Order. This relaxation of effluent limitations in this Order is consistent with the exceptions to the anti-backsliding requirements of the CWA and federal regulations.

   In conformance with reasonable potential analysis (RPA) procedures in Appendix VI of the California Ocean Plan (2009), effluent limitations for some constituents are not carried forward in this Order because the concentrations detected during the last five years did not demonstrate reasonable potential to cause or contribute to an exceedance of water quality standards. Without reasonable potential, there is no longer a need to maintain prior WQBELs under NPDES regulations, antibacksliding provisions, and antidegradation policies. The accompanying monitoring and reporting program requires continued data collection and if monitoring data show reasonable potential for a constituent to cause or contribute to an exceedance of water quality standards, the Order will be reopened to incorporate WQBELs. Such an approach ensures that the discharge will adequately protect water quality standards for designated beneficial uses and conform with antidegradation policies and antibacksliding provisions.

9. **Endangered Species Act.** This Order/Permit does not authorize any act that results in the taking of a threatened or endangered species or any act that is now prohibited, or becomes prohibited in the future, under either the California Endangered Species Act (Fish and Game Code sections 2050 to 2097) or the federal Endangered Species Act (16 U.S.C. sections 1531 to 1544). This Order/Permit requires compliance with effluent limitations, receiving water limitations, and other requirements to protect the beneficial uses of waters of the State. The Discharger is responsible for meeting all requirements of the applicable Endangered Species Act

TENTATIVE

[1] All further statutory references are to title 40 of the Code of Federal Regulations unless otherwise indicated.

10. **Monitoring and Reporting Requirements.** 40 CFR part 122.48 requires that all NPDES permits specify requirements for recording and reporting monitoring results. California Water Code sections 13267 and 13383 authorize the Regional Water Board to require technical and monitoring reports. The Monitoring and Reporting Program (Attachment E) establishes monitoring and reporting requirements to implement federal and State requirements.

D. Impaired Water Bodies on CWA 303(d) List

Section 303(d) of the CWA requires states to identify specific water bodies where water quality standards are not expected to be met after implementation of technology-based effluent limitations on point sources. For all 303(d)-listed water bodies and pollutants, the Regional Water Board plans to develop and adopt TMDLs that will specify WLAs for point sources and load allocations (LAs) for non-point sources, as appropriate.

The USEPA approved the State Water Board's 2010 303(d) list of impaired water bodies on November 12, 2010. Certain receiving waters in the Los Angeles and Ventura County watersheds do not fully support beneficial uses and therefore have been classified as impaired on the 2010 303(d) list and have been scheduled for total maximum daily load (TMDL) development. The Facility discharges into the Pacific Ocean. The 2010 State Water Board's 303(d) List does not classify the Pacific Ocean at the discharge location as impaired. This indicates that the water quality in the Pacific Ocean in the area of the discharge supports the beneficial uses. Hence, there are no requirements for TMDLs in the area.

E. Other Plans, Policies and Regulations – Not Applicable

IV. RATIONALE FOR EFFLUENT LIMITATIONS AND DISCHARGE SPECIFICATIONS

The CWA requires point source dischargers to control the amount of conventional, non-conventional, and toxic pollutants that are discharged into the waters of the United States. The control of pollutants discharged is established through effluent limitations and other requirements in NPDES permits. There are two principal bases for effluent limitations in the Code of Federal Regulations: part 122.44(a) requires that permits include applicable technology-based limitations and standards; and part 122.44(d) requires that permits include water quality-based effluent limitations to attain and maintain applicable numeric and narrative water quality criteria to protect the beneficial uses of the receiving water.

A Reverse Osmosis (RO) system reduces and essentially removes dissolved solids and other impurities in water by passing pressurized water over a semi-permeable membrane. The dissolved solids that do not pass through the membrane and the remaining solution (brine) flow past the membrane surface and are discharged. On March 29, 2004, the Discharger submitted a document entitled "*Supplemental Description of the Southern California Edison's Pebbly Beach Desalination Plant Santa Catalina Island*" that described the RO process used at the Facility. It indicates that the RO system is designed to remove 99 percent of the total dissolved solids (TDS) (mostly salts) from the intake water. It also

TENTATIVE

indicates that approximately 37 percent of the intake water is recovered as potable water. Thus, the mass of TDS and other parameters contained in the discharge remains nearly unchanged; however, the concentration of TDS and other parameters contained in the decreased volume of brine water is increased by approximately 37 percent or a multiple of 1.59. The previous permit noted that the increase of TDS and other parameters is not expected to result in saline concentrations in the effluent that would result in the degradation of marine life or marine waters. Since there has been no change in the processes used at the Facility, it is not expected that the saline concentrations in the effluent would result in the degradation of marine life or marine waters.

The Discharger uses polycarboxylic acid as an anti-scalant in the reverse osmosis process. A review of the Material Safety Data Sheet indicates polycarboxylic acid in the effluent is not expected to have adverse effects on the receiving water and not considered a pollutant of concern for this discharge. However, adverse affects would be detected in toxicity.

The previous permit established effluent limitations for BOD, oil and grease, settleable solids, suspended solids, turbidity, pH, temperature, arsenic, cadmium, copper, lead, mercury, nickel, selenium, silver, and zinc. Table A of the Ocean Plan establishes technology-based effluent limitations for oil and grease, total suspended solids (TSS), settleable solids, turbidity, and pH. The Thermal Plan contains temperature objectives for Coastal Waters that are applicable to this discharge. Data collected over the term of the previous permit indicates that the discharge does have reasonable potential to exceed water quality objectives for copper, zinc, bis(2-ethylhexyl)phthalate, and tributyltin. Data collected over the term of the previous permit term indicate the discharge does not demonstrate reasonable potential to exceed water quality objectives established in Table B of the Ocean Plan for arsenic, cadmium, lead, mercury, nickel, selenium, and silver; these pollutants were limited in the previous Order and were reported in detectable concentrations in the discharge monitoring data. The parameters BOD, oil and grease, settleable solids, TSS, turbidity, pH, temperature, arsenic, cadmium, copper, lead, mercury, nickel, selenium, silver, and zinc remain pollutants of concern for this discharge.

The Discharger requested periodic flushing of the seawater supply pipeline to control biofilm growth. This permit allows the flushing activity. Effluent limitations for total coliform, fecal coliform, and enterococcus have been included in this permit because these are pollutants of concern for the discharge of wastewater from flushing of the seawater supply pipelines activity. Other pollutants of concerns for this type of activity include pH, oil and grease, BOD, TSS, turbidity, settleable solids, and metals. Effluents limitations and monitoring requirements for these parameters are included in this permit.

Generally, mass-based effluent limitations ensure that proper treatment, and not dilution, is employed to comply with the final effluent concentration limitations. Part 122.45(f)(1) requires that all permit limitations, standards or prohibitions be expressed in terms of mass units except under the following conditions: (1) for pH, temperature, radiation or other pollutants that cannot appropriately be expressed by mass limitations; (2) when applicable standards or limitations are expressed in terms of other units of measure; or (3) if in establishing technology-based permit limitation on a case-by-case basis limitation based on mass are infeasible because the mass or pollutant cannot be related to a measure of

TENTATIVE

production. The limitations, however, must ensure that dilution will not be used as a substitute for treatment. This Order includes mass-based limitations for most of the constituents.

A. Discharge Prohibitions

The discharge prohibitions are based on the requirements of the Ocean Plan, Basin Plan, State Water Board's plans and policies, the Water Code, and previous permit provisions, and are consistent with the requirements set for other discharges regulated by NPDES permits to the Pacific Ocean.

B. Technology-Based Effluent Limitations

1. Scope and Authority

Section 301(b) of the CWA and implementing USEPA permit regulations at part 122.44, title 40 of the Code of Federal Regulations, require that permits include conditions meeting applicable technology-based requirements at a minimum, and any more stringent effluent limitations necessary to meet applicable water quality standards. The discharge authorized by this Order must meet minimum federal technology-based requirements based on Best Professional Judgment (BPJ) in accordance with Part 125, section 125.3.

The CWA requires that technology-based effluent limitations be established based on several levels of controls:

a. Best practicable treatment control technology (BPT) represents the average of the best performance by plants within an industrial category or subcategory. BPT standards apply to toxic, conventional, and non-conventional pollutants.

b. Best available technology economically achievable (BAT) represents the best existing performance of treatment technologies that are economically achievable within an industrial point source category. BAT standards apply to toxic and non-conventional pollutants.

c. Best conventional pollutant control technology (BCT) represents the control from existing industrial point sources of conventional pollutants including BOD, TSS, fecal coliform, pH, and oil and grease. The BCT standard is established after considering the "cost reasonableness" of the relationship between the cost of attaining a reduction in effluent discharge and the benefits that would result, and also the cost effectiveness of additional industrial treatment beyond BPT.

d. New source performance standards (NSPS) represent the best available demonstrated control technology standards. The intent of NSPS guidelines is to set limitations that represent state-of-the-art treatment technology for new sources.

TENTATIVE

The CWA requires USEPA to develop effluent limitations, guidelines and standards (ELGs) representing application of BPT, BAT, BCT, and NSPS. Section 402(a)(1) of the CWA and section 125.3 of the Code of Federal Regulations authorize the use of best professional judgment (BPJ) to derive technology-based effluent limitations on a case-by-case basis where ELGs are not available for certain industrial categories and/or pollutants of concern. Where BPJ is used, the permit writer must consider specific factors outlined in section 125.3.

2. Applicable Technology-Based Effluent Limitations

Applicable ELGs for the discharge have not yet been developed.

This Order includes technology-based effluent limitations based on the effluent limitations contained in Table A of the Ocean Plan (Table A). The previous Order included effluent limitations for, BOD, oil and grease, settleable solids, suspended solids, turbidity, and pH based on consideration of existing effluent limitations and those contained in Table A. Table A contains technology-based effluent limitations for oil and grease, suspended solids, settleable solids, turbidity, and pH applicable to publicly-owned treatment works or industrial facilities for which ELGs have not been developed. Section 402(o) of the CWA and part 122.44(l) require that effluent limitations or conditions in reissued Orders be at least as stringent as those in the existing Orders. The effluent limitations established in Order No. R4-2006-0068 are carried over in this Order. Table F-6 summarizes the effluent limitations contained in Order No. R4-2006-0068 and are carried over to this Order.

Table F-6. Summary of Technology-based Effluent Limitations for Discharge Point 001

Parameter	Units	Average Monthly Effluent Limitations	7-Day Average Effluent Limitations	Maximum Daily Effluent Limitations
BOD_5	mg/L	20	---	60
	lbs/day[1]	120.1	---	360.3
TSS	mg/L	50	---	150
	lbs/day[1]	300.2	---	900.7
Oil & Grease	mg/L	10	---	15
	lbs/day[1]	60.1	---	90.1
Settleable Solids	ml/L	0.1	---	0.3
Turbidity	NTU	50	100	150
pH	s.u.	---	---	[2]

[1] The mass emission rates (lbs/day) are based on the flow rate of 0.720 million gallons per day (mgd), using the formula:

$$m = 8.34 \times Ce \times Q$$

where: m = mass discharge for a pollutant, lbs/day
Ce = limitation concentration for a pollutant, mg/L
Q = flow rate, mgd

[2] The pH of the wastes discharged shall at all times be within the range of 6.0 to 9.0 pH units.

TENTATIVE

C. Water Quality-Based Effluent Limitations (WQBELs)

1. Scope and Authority

Section 301(b) of the CWA and part 122.44(d) require that permits include limitations more stringent than applicable federal technology-based requirements where necessary to achieve applicable water quality standards.

Part 122.44(d)(1)(i) mandates that permits include effluent limitations for all pollutants that are or may be discharged at levels that have the reasonable potential to cause or contribute to an exceedance of a water quality standard, including numeric and narrative objectives within a standard. Where reasonable potential has been established for a pollutant, but there is no numeric criterion or objective for the pollutant, water quality-based effluent limitations (WQBELs) must be established using: (1) USEPA criteria guidance under CWA section 304(a), supplemented where necessary by other relevant information; (2) an indicator parameter for the pollutant of concern; or (3) a calculated numeric water quality criterion, such as a proposed state criterion or policy interpreting the state's narrative criterion, supplemented with other relevant information, as provided in part 122.44(d)(1)(vi).

The process for determining reasonable potential and calculating WQBELs when necessary is intended to protect the designated uses of the receiving water as specified in the Ocean Plan. Additional WQBELs for temperature are required as specified in the Thermal Plan.

2. Applicable Beneficial Uses and Water Quality Criteria and Objectives

As noted in Section III.C of this Fact Sheet, the State Water Board adopted an Ocean Plan that designates beneficial uses, establishes water quality objectives, and contains implementation programs and policies to achieve those objectives for all waters addressed through the Ocean Plan. The beneficial uses applicable to the Pacific Ocean are summarized in Section III.C.3 of this Fact Sheet. The Ocean Plan includes both narrative and numeric water quality objectives applicable to the receiving water.

Table B of the Ocean Plan (Table B) includes the following water quality objectives for toxic pollutants and whole effluent toxicity:

1) 6-month median, daily maximum, and instantaneous maximum objectives for 21 chemicals and chemical characteristics, including total residual chlorine and chronic toxicity, for the protection of marine aquatic life.
2) 30-day average objectives for 20 non-carcinogenic chemicals for the protection of human health.
3) 30-day average objectives for 42 carcinogenic chemicals for the protection of human health.
4) Daily maximum objectives for acute and chronic toxicity.

TENTATIVE

3. Determining the Need for WQBELs

The need for effluent limitations based on water quality objectives in Table B of the Ocean Plan was evaluated in accordance with part 122.44(d) and guidance for statistically determining the "reasonable potential" for a discharged pollutant to exceed an objective, as outlined in the California Ocean Plan Reasonable Potential Analysis (RPA) Amendment that was adopted by the State Water Board on September 15, 2009. The statistical approach combines knowledge of effluent variability (as estimated by a coefficient of variation) with the uncertainty due to a limited amount of effluent data to estimate a maximum effluent value at a high level of confidence. This estimated maximum effluent value is based on a lognormal distribution of daily effluent values. Projected receiving water values (based on the estimated maximum effluent value or the reported maximum effluent value and minimum probable initial dilution), can then be compared to the appropriate objective to determine the potential for an exceedance of that objective and the need for an effluent limitation.

The water quality objectives contained in the Ocean Plan for pollutants for which detected effluent data exist or were previously limited in Order No. R4-2006-0068, are summarized in Table F-7, below.

Table F-7. Ocean Plan Water Quality Objectives

Parameter	6-Month Median (µg/L)	Daily Maximum (µg/L)	Instantaneous Maximum (µg/L)	30-Day Average (µg/L)
Antimony	--	--	--	1,200
Arsenic	8	32	80	--
Cadmium	1	4	10	--
Chromium VI	2	8	20	--
Copper	3	12	30	--
Lead	2	8	20	--
Mercury	0.04	0.16	0.4	--
Nickel	5	20	50	--
Selenium	15	60	150	--
Silver	0.7	2.8	7	--
Thallium	--	--	--	2
Zinc	20	80	200	--
Bis(2-ethylhexyl)Phthalate	--	--	--	3.5
Di-n-butyl Phthalate	--	--	--	3,500
1,2-Diphenylhydrazine	--	--	--	0.16
Tributyltin	--	--	--	0.0014

TENTATIVE

According to the 2009 Ocean Plan amendment, the reasonable potential analysis (RPA) can yield three endpoints:

1) Endpoint 1, an effluent limitation is required and monitoring is required;
2) Endpoint 2, an effluent limitation is not required and the Regional Water Board may require monitoring; and
3) Endpoint 3, the RPA is inconclusive, monitoring is required, and an existing effluent limitation may be retained or a permit reopener clause may be included to allow inclusion of an effluent limitation if future monitoring warrants the inclusion.

Effluent data submitted to the Regional Water Board for the time frame of January 2007 through September 2010, and the dilution credit applicable to the ocean outfall (5:1) were used with the RPcalc 2.0 software tool developed by the State Water Board was used for conducting RPAs. Reasonable potential to exceed water quality objectives contained within the Ocean Plan was determined for copper, zinc, bis (2-ethylhexyl) phthalate, and tributyltin. Based on the results using the RPcalc 2.0 software tool, the discharge does not demonstrate reasonable potential for arsenic, cadmium, lead, mercury, nickel, selenium, and silver; Endpoint 2 was reached through analysis. Thus, as specified in the 2009 Ocean Plan amendment, the previous effluent limitation is not included; however, monitoring requirements remain in the Order.

WQBELs for tributyltin have been established in Order No. R4-2011-0165. WQBELs for bis (2-ethylhexyl) phthalate, copper, and zinc were retained in this Order. For many of the Table B parameters, insufficient data were available to determine if the parameters had reasonable potential to exceed water quality objectives, thus WQBELs were not established for these parameters. However, monitoring requirements for these parameters have been established in the Monitoring and Reporting Program (Attachment E).

4. WQBEL Calculations

From the Table B water quality objectives of the Ocean Plan, effluent limitations are calculated according to Equation 1 of the Ocean Plan for all pollutants, except for acute toxicity (if applicable) and radioactivity:

$$Ce \equiv Co + Dm(Co - Cs)$$

Where:

Ce = the effluent limitation (µg/L)
Co = the water quality objective to be met at the completion of initial dilution (µg/L)
Cs = background seawater concentration (µg/L)
Dm = minimum probable initial dilution expressed as parts seawater per part wastewater

TENTATIVE

The Dm is based on observed waste flow characteristics, receiving water density structure, and the assumption that no currents of sufficient strength to influence the initial dilution process flow across the discharge structure.

The State Water Board had determined the minimum initial dilution factor, Dm, for the ocean outfall to be 5 to 1. Initial dilution is the process that results in the rapid and irreversible turbulent mixing of wastewater with ocean water around the point of discharge. As stated above, the water quality objective to be met at the completion of initial dilution is contained in Table B of the Ocean Plan. As site-specific water quality data is not available, in accordance with Table B implementing procedures, Cs equals zero for all pollutants, except the following:

Table F-8. Pollutants with Background Seawater Concentrations

Parameter	Ocean Plan Table C Background Seawater Concentration (Cs)
Arsenic	3 µg/L
Copper	2 µg/L
Mercury	0.0005 µg/L
Silver	0.16 µg/L
Zinc	8 µg/L

WQBELs based on the dilution provided at the outfall for copper, zinc, bis(2-ethylhexyl)phthalate, and tributyltin are developed using Equation 1 of the Ocean Plan and the background concentrations (Cs) in Table F-8.

a. WQBELs Calculation Examples

The following demonstrates how the WQBELs for copper, zinc, bis(2-ethyl-hexyl)phthalate, and tributyltin are established.

Concentration-Based Effluent Limitations:

Copper

Ce = 3 µg/L + 5 (3 µg/L – 2) = 8 µg/L (6-Month Median)
Ce = 12 µg/L + 5 (12 µg/L – 2) = 62 µg/L (Daily Maximum)
Ce = 30 µg/L + 5 (30 µg/L – 2) = 170 µg/L (Instantaneous Maximum)

Zinc

Ce = 20 µg/L + 5 (20 µg/L – 8) = 80 µg/L (6-Month Median)
Ce = 80 µg/L + 5 (80 µg/L – 8) = 440 µg/L (Daily Maximum)
Ce = 200 µg/L + 5 (200 µg/L – 8) = 1,160 µg/L (Instantaneous Maximum)

TENTATIVE

Bis(2-ethylhexyl)Phthalate

Ce = 3.5 µg/L + 5 (3.5 µg/L – 0) = 21 µg/L (30-Day Average)

Tributyltin

Ce = 0.0014 µg/L + 5 (0.0014 µg/L – 0) = 0.0084 µg/L (30-Day Average)

5. Whole Effluent Toxicity (WET)

Whole effluent toxicity (WET) protects the receiving water quality from the aggregate toxic effect of a mixture of pollutants in the effluent. WET tests measure the degree of response of exposed aquatic test organisms to an effluent. The WET approach allows for protection of the narrative "no toxics in toxic amounts" criterion while implementing numeric criteria for toxicity. There are two types of WET tests: acute and chronic. An acute toxicity test is conducted over a short time period and measures mortality. A chronic toxicity test is conducted over a longer period of time and may measure mortality, reproduction, and growth.

A review of discharge data the Discharger provided during the permit term indicated two data points exist for chronic toxicity results; both were reported as <4 TU_c. In addition, the Discharger indicated on EPA Form 2C (dated January 28, 2011) a sample collected March 30, 2010, resulted in 100% survival when tested for chronic toxicity. Sufficient data to determine reasonable potential for toxicity was not available. Thus, effluent WQBELs have not been established for toxicity.

Implementing provisions at Section III. C of the Ocean Plan require chronic toxicity monitoring for ocean waste discharges with minimum initial dilution factors below 100. The Discharger will be required to continue to conduct chronic toxicity testing in order to determine reasonable potential and establish WQBELs as necessary. In addition, the Order establishes thresholds that when exceeded requires the Discharger to conduct accelerated toxicity testing and/or conduct toxicity reduction evaluation (TRE) and toxicity identification evaluation (TIE) studies.

6. Final WQBELs

This Order establishes effluent limitations for copper, zinc, bis(2-ethylhexyl)phthalate, tributyltin, total coliform, fecal coliform, and enterococcus consistent with water quality objectives contained in the Ocean Plan.

Table F-9. Summary of Water Quality-based Effluent Limitations Discharge Point 001

Parameter	Units	Effluent Limitations			
		6-Month Median	30-Day Average	Maximum Daily	Instantaneous Maximum
Copper, Total Recoverable	µg/L	8	---	62	170
	lbs/day [1]	0.048		0.37	1.02
Zinc, Total Recoverable	µg/L	80	---	440	1,160
	lbs/day[1]	0.48	--	2.64	6.97

TENTATIVE

Parameter	Units	Effluent Limitations			
		6-Month Median	30-Day Average	Maximum Daily	Instantaneous Maximum
Bis(2-ethylhexyl)Phthalate	µg/L	---	21	---	---
	lbs/day[1]	--	0.13		
Tributyltin	µg/L	---	0.0084	---	---
	lbs/day[1]		5.04E-05		
Total coliform [2]	MPN/100ml	--	--	--	--
Fecal coliform [2]	MPN/100ml	--	--	--	--
Enterococcus [2]	MPN/100ml	--	--	--	--

[1] The mass emission rates (lbs/day) are based on the flow rate of 0.720 million gallons per day (mgd), using the formula:

$$m = 0.00834 \times Ce \times Q$$

where: m = mass discharge for a pollutant, lbs/day
Ce = limitation concentration for a pollutant, µg/L
Q = flow rate, mgd

[2] Bacterial Limitations: .

(a) 30-day Geometric Mean Limits – The geometric mean shall be calculated using the five most recent samples results:
(1) Total coliform density shall not exceed 1,000 per 100 ml;
(2) Fecal coliform density shall not exceed 200 per 100 ml; and
(3) Enterococcus density shall not exceed 35 per 100 ml.

(b) Single Sample Maximum:
(1) Total coliforrm density shall not 10,000 per 100 ml;
(2) Fecal coliform density shall not exceed 400 per 100 ml;
(3) Enterococcus density shall not exceed 104 per 100 ml; and
(4) The total coliform density shall not exceed 1,000 per 100 ml when the fecal coliform/total coliform ratio exceeds 0.1.

If a single sample exceeds any of the single sample maximum (SSM) standards, repeat sampling shall be conducted to determine the extent and persistent of the exceedance. Repeat sampling shall be conducted within 24 hours of receiving analytical results and continued until the sample result is less than the SSM standard.

When repeat sampling is required because of an exceedance of any one single sample density, values from all samples collected during that 30-day period will be used to calculate the geometric mean.

D. Final Effluent Limitations

Section 402(o) of the CWA and part 122.44(l) require that effluent limitations or conditions in reissued Orders be at least as stringent as those in the existing Orders based on the submitted sampling data. Effluent limitations for pH, BOD_5, oil and grease, TSS, settleable solids, turbidity, copper, zinc, and bis(2-ethylhexyl)phthalate are being carried over from Order No. R4-2006-0068. Removal of these numeric limitations would constitute backsliding under CWA section 402(o). The Regional Water Board has determined that these numeric effluent limitations continue to be applicable to the Facility and that backsliding is not appropriate. Effluent limitations for tributyltin are established based on the demonstration of reasonable potential and in accordance with procedures contained in the Ocean Plan. The temperature effluent limitation is included based on the Thermal Plan. The bacterial limitations are also included based on the Ocean Plan objectives.

TENTATIVE

1. Satisfaction of Anti-Backsliding Requirements

Effluent limitations for arsenic, cadmium, lead, mercury, nickel, selenium, and silver have been removed from this Order because they did not show reasonable potential to cause or contribute to an excursion above the respective water quality standards. The relaxation of effluent limitations is consistent with the anti-backsliding requirements of the CWA and federal regulations, based on the consideration of new information (i.e., discharge monitoring reports and RPA). However, monthly monitoring requirements are retained in this Order to ensure that the removal of the effluent limitations for arsenic, cadmium, lead, mercury, nickel, selenium, and silver does not result in the discharge causing impairment of beneficial uses of the receiving water. All other effluent limitations are at least as stringent as the effluent limitations in the previous Order.

2. Satisfaction of Antidegradation Policy

Section 131.12 requires that the state water quality standards include an anti-degradation policy consistent with the federal policy. The State Water Board established California's antidegradation policy in State Water Board Resolution No. 68-16. Resolution No. 68-16 incorporates the federal antidegradation policy where the federal policy applies under federal law. Resolution No. 68-16 requires that existing water quality be maintained unless degradation is justified based on specific findings. The Regional Water Board's Basin Plan implements, and incorporates by reference, both the State and federal antidegradation policies.

The permitted discharge is consistent with the antidegradation provision of part 131.12 and State Water Board Resolution No. 68-16. The final limitations in this Order hold the Discharger to performance levels that will not cause or contribute to water quality impairments. The effluent limitations, receiving water limitations and monitoring requirements ensure that excursions in excess of the water quality limits which are designed to protect beneficial uses will be apparent and addressed immediately. Further, compliance with these requirements will result in the use of best practicable treatment or control of the discharge.

3. Stringency of Requirements for Individual Pollutants

This Order contains both technology-based and water quality-based effluent limitations for individual pollutants. The technology-based effluent limitations consist of restrictions on total suspended solids, oil and grease, settleable solids, turbidity, and BOD. Effluent limitations for BOD are based on the existing Order. This Order's technology-based pollutant restrictions implement the Ocean Plan requirements.

Water quality-based effluent limitations have been scientifically derived to implement water quality objectives that protect beneficial uses. Both the beneficial uses and the water quality objectives have been approved pursuant to federal law and are the applicable federal water quality standards. To the extent that toxic pollutant water quality-based effluent limitations were derived from the Ocean Plan, the Ocean Plan

TENTATIVE

is the applicable standard pursuant to part 131.38. The scientific procedures for calculating the individual water quality-based effluent limitations for priority pollutants are based on the 2009 Ocean Plan, which was approved by USEPA on October 8, 2010. All beneficial uses and water quality objectives contained in the Ocean Plan were approved under state law and submitted to and approved by USEPA. Collectively, this Order's restrictions on individual pollutants are no more stringent than required to implement the requirements of the CWA.

Table F-10. Summary of Final Effluent Limitations Discharge Point 001

Parameter	Units	Effluent Limitations					Rationale [1]
		6-Month Median	Average Monthly	7-Day Average	Maximum Daily	Instantaneous Maximum	
pH	S.U.	—	—	—	—	6.0 – 9.0 [2]	E, OP
Biochemical Oxygen Demand 5-day (BOD_5) @ 20°C	mg/L	—	20	—	60	—	E, BPJ
	lbs/day [3]	—	120.1	—	360.3	—	
Total Suspended Solids (TSS)	mg/L	—	50	—	150	—	E, BPJ
	lbs/day [3]	—	300.2	—	900.7	—	
Oil and Grease	mg/L	—	10	—	15	—	E, BPJ
	lbs/day [3]	—	60.1	—	90.1	—	
Settleable Solids	mL/L	—	0.1	—	0.3	—	E, BPJ
Turbidity	NTU	—	50	100	150	—	E, BPJ, OP
Copper, Total Recoverable	µg/L	8	—	—	62	170	E,OP
	lbs/day [3]	0.048	—	—	0.37	1.02	
Zinc, Total Recoverable	µg/L	80	—	—	440	1,160	E,OP
	lbs/day [3]	0.48	—	—	2.64	6.97	
Bis(2-ethylhexyl)Phthalate	µg/L	—	21	—	—	—	E, OP
	lbs/day [3]	—	0.13	—	—	—	
Tributyltin	µg/L	—	0.0084	—	—	—	OP
		—	5.04E-05	—	—	—	
Total coliform [4]	MPN/100ml	—	—	—	—	—	OP
Fecal coliform [4]	MPN/100ml	—	—	—	—	—	OP
Enterococcus [4]	MPN/100ml	—	—	—	—	—	OP

TENTATIVE

[1] E = Existing Order (Order No. R4-2006-0068); OP = Ocean Plan; BPJ = Best Professional Judgment the method used by permit writers to develop technology-based NPDES permit conditions on a case-by-case basis using all reasonably available and relevant data. BPJ limitations are established in cases in which effluent limitation guidelines are not available for a particular pollutant of concern. Authorization for using BPJ limitations is found under section 401(a)(1) of the Clean Water Act and under 40 CFR section 125.3

[2] The pH of the effluent shall remain with the range of 6.0 to 9.0 pH units at all times.

[3] The mass emission rates (lbs/day) are based on the flow rate of 0.720 million gallons per day (mgd), using the formula:

$$m = 0.00834 \times Ce \times Q$$

where:

m = mass discharge for a pollutant, lbs/day
Ce = limitation concentration for a pollutant, µg/L
Q = flow rate, mgd

[4] Bacterial Limitations: .

(a) 30-day Geometric Mean Limits – The geometric mean shall be calculated using the five most recent samples results:

(1) Total coliform density shall not exceed 1,000 per 100 ml;
(2) Fecal coliform density shall not exceed 200 per 100 ml; and
(3) Enterococcus density shall not exceed 35 per 100 ml.

(b) Single Sample Maximum:

(1) Total coliforrm density shall not 10,000 per 100 ml;
(2) Fecal coliform density shall not exceed 400 per 100 ml;
(3) Enterococcus density shall not exceed 104 per 100 ml; and
(4) The total coliform density shall not exceed 1,000 per 100 ml when the fecal coliform/total coliform ratio exceeds 0.1.

If a single sample exceeds any of the single sample maximum (SSM) standards, repeat sampling shall be conducted to determine the extent and persistent of the exceedance. Repeat sampling shall be conducted within 24 hours of receiving analytical results and continued until the sample result is less than the SSM standard.

When repeat sampling is required because of an exceedance of any one single sample density, values from all samples collected during that 30-day period will be used to calculate the geometric mean

4. Temperature Limitation

The temperature of wastes discharged shall not exceed 100°F.

Effluent limitations for temperature are consistent with the requirements of the Thermal Plan.

E. Interim Effluent Limitations – Not Applicable

F. Land Discharge Specifications – Not Applicable

G. Reclamation Specifications – Not Applicable

V. RATIONALE FOR RECEIVING WATER LIMITATIONS

A. Surface Water

The Ocean Plan contains numeric and narrative water quality objectives applicable to the coastal waters of California. Water quality objectives include an objective to maintain the high quality waters pursuant to federal regulations (part 131.12) and State Water Board Resolution No. 68-16. Receiving water limitations in this Order are included to ensure protection of beneficial uses of the receiving water and are based on the water quality objectives contained in the Ocean Plan.

B. Groundwater – Not Applicable

VI. RATIONALE FOR MONITORING AND REPORTING REQUIREMENTS

40 CFR Part 122.48 requires that all NPDES permits specify requirements for recording and reporting monitoring results. Water Code sections 13267 and 13383 authorizes the Regional Water Board to require technical and monitoring reports. The Monitoring and Reporting Program (MRP), Attachment E of this Order, establishes monitoring and reporting requirements to implement federal and state requirements. The following

TENTATIVE

provides the rationale for the monitoring and reporting requirements contained in the MRP for this facility.

A. Influent Monitoring – Not Applicable

B. Effluent Monitoring

Monitoring for those pollutants expected to be present in discharges from Discharge Point No. 001 (Monitoring Locations EFF-001) will be required as shown on the proposed MRP (Attachment E). To determine compliance with effluent limitations, the proposed monitoring plan carries forward monitoring requirements from Order No. R4-2006-0068 for flow, temperature, oil and grease, pH, settleable solids, suspended solids, and BOD. Monitoring for the Ocean Plan Table B parameters contained in the Ocean Plan was carried forward for bis(2-ethylhexyl)phthalate) and the metals. The monitoring frequency of tributyltin was changed from semi-annually to monthly to determine compliance with the effluent limitations. For the other parameters in the Ocean Plan Table B, the monitoring frequency was carried forward from Order No. R4-2006-0068 to collect data for the conduction of reasonable potential analysis. Weekly monitoring for total coliform, fecal coliform, and enterococcus was also included to determine compliance with the effluent limitations.

For the discharge of wastewater from flushing the seawater supply pipelines activity, the frequency of monitoring is once per discharge for total coliform, fecal coliform, enterococcus, pH, oil and grease, BOD, TSS, turbidity, settleable solids, temperature, copper, zinc, bis(2-ethylhexyl)phthalate, and tributyltin to determine compliance with the effluent limitations. Monitoring for chronic toxicity and the remaining priority pollutants for once per year has been included to determine reasonable potential.

C. Whole Effluent Toxicity Testing Requirements

Whole effluent toxicity (WET) protects the receiving water quality from the aggregate toxic effect of a mixture of pollutants in the effluent. A chronic toxicity test is conducted over a longer period of time and may measure mortality, reproduction, and growth. Section III.C.3.c.(4) of the Ocean Plan requires dischargers to conduct chronic toxicity testing if the minimum initial dilution of the effluent is below 100:1. This Order includes annual monitoring requirements for chronic toxicity in the MRP (Attachment E) as specified in the Ocean Plan, and to determine reasonable potential.

Chronic toxicity is to be calculated using the following formula:

$$TUc = \frac{100}{NOEL}$$

Where: No Observed Effect Level (NOEL) is expressed as the maximum percent effluent or receiving water that causes no observable effect on a test organism, as determined by the result of a critical life stage toxicity test as listed in Appendix II of the Ocean Plan.

TENTATIVE

The Ocean Plan establishes numeric objectives for chronic toxicity in Section II.D, Table B, with a chronic toxicity daily maximum effluent objective of 1.0 (TUc). Based on methods of the Ocean Plan with a minimal initial dilution of 5:1, a maximum daily water quality trigger of 6 TUc for chronic toxicity is established.

If the toxicity water quality trigger of 6 TUc is exceeded, then, within 15 days of the exceedance, the Discharger shall begin conducting six additional toxicity tests over a six month period and provide the results to the Regional Water Board. If the additional monthly toxicity tests indicate that toxicity effluent limitations are being consistently violated, the Regional Water Board may require the Discharger to complete a toxicity reduction evaluation (TRE) and Toxic Identification Evaluation (TIE).

D. Receiving Water Monitoring

1. Surface Water

This Order includes receiving water limitations and therefore, monitoring requirements are included in the MRP (Attachment E) to determine compliance with the receiving water limitations established in Limitations and Discharge Requirements, Receiving Water Limitations, Section V.A. Monitoring for temperature, pH, and toxic pollutants in the receiving water is included in the MRP. The discharge of wastewater from flushing the seawater supply pipeline may contribute to the receiving water impairment for total coliform, fecal coliform, and enterococcus. Thus, receiving water monitoring for these parameters is included in this permit. The facility is required to perform general observations of the receiving water when discharges occur and report the observations in the monitoring report. Attention shall be given to the presence or absence of: floating or suspended matter, discoloration, aquatic life, visible film, sheen or coating, and fungi, slime, or objectionable growths.

2. Groundwater – Not Applicable

E. Other Monitoring Requirements – Not Applicable

VII. RATIONALE FOR PROVISIONS

A. Standard Provisions

Standard Provisions, which apply to all NPDES permits in accordance with part 122.41, and additional conditions applicable to specified categories of permits in accordance with part 122.42, are provided in Attachment D. The Discharger must comply with all standard provisions and with those additional conditions that are applicable under part 122.42.

40 CFR Part 122.41(a)(1) and (b) through (n) establish conditions that apply to all State-issued NPDES permits. These conditions must be incorporated into the permits either expressly or by reference. If incorporated by reference, a specific

TENTATIVE

citation to the regulations must be included in the Order. 40 CFR Part 123.25(a)(12) allows the state to omit or modify conditions to impose more stringent requirements. In accordance with part 123.25, this Order omits federal conditions that address enforcement authority specified in parts 122.41(j)(5) and (k)(2) because the enforcement authority under the Water Code is more stringent. In lieu of these conditions, this Order incorporates by reference Water Code section 13387(e).

B. Special Provisions

1. Reopener Provisions

These provisions are based on part 123 and the previous Order. The Regional Water Board may reopen the permit to modify permit conditions and requirements. Causes for modifications include the promulgation of new federal regulations, modification in toxicity requirements, or adoption of new regulations by the State Water Board or Regional Water Board, including revisions to the Basin Plan.

2. Special Studies and Additional Monitoring Requirements

a. **Chronic Toxicity Trigger.** This provision is based on Table B of the Ocean Plan Toxicity Control Provisions.

b. **Initial Investigation Toxicity Reduction Evaluation Workplan.** This provision is based on section III.C.9 of the Ocean Plan.

3. Construction, Operation, and Maintenance Specifications – Not Applicable

4. Special Provisions for Municipal Facilities (POTWs Only) – Not Applicable

5. Other Special Provisions – Not Applicable

6. Compliance Schedules – Not Applicable

VIII. PUBLIC PARTICIPATION

The California Regional Water Quality Control Board, Los Angeles Region (Regional Water Board) is considering the issuance of waste discharge requirements (WDRs) that will serve as a National Pollutant Discharge Elimination System (NPDES) permit for Southern California Edison Company-Pebbly Beach Desalination Plant. As a step in the WDR adoption process, the Regional Water Board staff has developed tentative WDRs. The Regional Water Board encourages public participation in the WDR adoption process.

A. Notification of Interested Parties

The Regional Water Board has notified the Discharger and interested agencies and persons of its intent to prescribe waste discharge requirements for the discharge and has provided them with an opportunity to submit their written comments and recommendations.

TENTATIVE

The public had access to the agenda and any changes in dates and locations through the Los Angeles Regional Water Board's website at: http://www.waterboards.ca.gov/losangeles.

B. Written Comments

The staff determinations are tentative. Interested persons are invited to submit written comments concerning these tentative WDRs as provided through the notification process electronically at losangeles@waterboards.ca.gov with a copy to Rosario.Aston@waterboards.ca.gov. To be fully responded to by staff and considered by the Regional Water Board, the written comments were due at the Regional Water Board office by 5:00 p.m. on September 5, 2014.

C. Public Hearing

The Regional Water Board held a public hearing on the tentative WDRs during its regular Regional Water Board meeting on the following date and time and at the following location:

Date: October 9, 2014
Time: 9:00 A.M
Location: Metropolitan Water District of Southern California, Board Room
700 N. Alameda Street
Los Angeles, California

Interested persons are invited to attend. At the public hearing, the Regional Water Board will hear testimony pertinent to the discharge, WDRs, and permit. For accuracy of the record, important testimony was requested in writing.

Please be aware that dates and venues may change. Our Web address is **http://www.waterboards.ca.gov/losangeles** where you can access the current agenda for changes in dates and locations.

D. Reconsideration of Waste Discharge Requirements

Any aggrieved person may petition the State Water Resources Control Board (State Water Board) to review the decision of the Regional Water Board regarding the final WDRs.. The petition must be received by the State Water Board at the following address within 30 calendar days of the Regional Water Board's action:

State Water Resources Control Board
Office of Chief Counsel
P.O. Box 100, 1001 I Street
Sacramento, CA 95812-0100

TENTATIVE

For instructions on how to file a petition for review, see http://www.waterboards.ca.gov/public_notices/petitions/water_quality/wqpetition_instr.shtml

E. Information and Copying

The Report of Waste Discharge (ROWD), tentative WDRs, related documents, comments received, and other information are on file and may be inspected at the address above at any time between 8:30 a.m. and 4:45 p.m., Monday through Friday. Copying of documents may be arranged through the Regional Water Board by calling (213) 576- 6600.

F. Register of Interested Persons

Any person interested in being placed on the mailing list for information regarding the WDRs and NPDES permit should contact the Regional Water Board, reference this facility, and provide a name, address, and phone number.

G. Additional Information

Requests for additional information or questions regarding this Order should be directed to Rosario Aston at (213) 576-6653 or Rosario.Aston@waterboards.ca.gov.

TENTATIVE

ATTACHMENT G – STATE WATER BOARD MINIMUM LEVELS IN THE CALIFORNIA OCEAN PLAN

MINIMUM* LEVELS

The Minimum* Levels identified in this appendix represent the lowest concentration of a pollutant that can be quantitatively measured in a sample given the current state of performance in analytical chemistry methods in California. These Minimum* Levels were derived from data provided by state-certified analytical laboratories in 1997 and 1998 for pollutants regulated by the California Ocean Plan and shall be used until new values are adopted by the SWRCB. There are four major chemical groupings: volatile chemicals, semi-volatile chemicals, inorganics, pesticides & PCB's. "No Data" is indicated by "--".

TABLE II-1
MINIMUM* LEVELS – VOLATILE CHEMICALS

		Minimum* Level (ug/L)	
Volatile Chemicals	**CAS Number**	**GC Method [a]**	**GCMS Method [b]**
Acrolein	107028	2.	5
Acrylonitrile	107131	2.	2
Benzene	71432	0.5	2
Bromoform	75252	0.5	2
Carbon Tetrachloride	56235	0.5	2
Chlorobenzene	108907	0.5	2
Chlorodibromomethane	124481	0.5	2
Chloroform	67663	0.5	2
1,2-Dichlorobenzene (volatile)	95501	0.5	2
1,3-Dichlorobenzene (volatile)	541731	0.5	2
1,4-Dichlorobenzene (volatile)	106467	0.5	2
Dichlorobromomethane	75274	0.5	2
1,1-Dichloroethane	75343	0.5	1
1,2-Dichloroethane	107062	0.5	2
1,1-Dichloroethylene	75354	0.5	2
Dichloromethane	75092	0.5	2
1,3-Dichloropropene (volatile)	542756	0.5	2
Ethyl benzene	100414	0.5	2
Methyl Bromide	74839	1.	2
Methyl Chloride	74873	0.5	2
1,1,2,2-Tetrachloroethane	79345	0.5	2
Tetrachloroethylene	127184	0.5	2
Toluene	108883	0.5	2
1,1,1-Trichloroethane	71556	0.5	2
1,1,2-Trichloroethane	79005	0.5	2
Trichloroethylene	79016	0.5	2
Vinyl Chloride	75014	0.5	2

Table II-1 Notes

a) GC Method = Gas Chromatography
b) GCMS Method = Gas Chromatography / Mass Spectrometry
* To determine the lowest standard concentration in an instrument calibration curve for these techniques, use the given ML (see Chapter III, "Use of Minimum* Levels").

TENTATIVE

TABLE II-2
MINIMUM* LEVELS – SEMI VOLATILE CHEMICALS

		Minimum* Level (ug/L)			
Semi-Volatile Chemicals	**CAS Number**	**GC Method [a,*]**	**GCMS Method [b,*]**	**HPLC Method [c,*]**	**COLOR Method [d]**
Acenapthylene	208968	--	10	0.2	--
Anthracene	120127	--	10	2	--
Benzidine	92875	--	5	--	--
Benzo(a)anthracene	56553	--	10	2	--
Benzo(a)pyrene	50328	--	10	2	--
Benzo(b)fluoranthene	205992	--	10	10	--
Benzo(g,h,i)perylene	191242	--	5	0.1	--
Benzo(k)floranthene	207089	--	10	2	--
Bis 2-(1-Chloroethoxy) methane	111911	--	5	--	--
Bis(2-Chloroethyl)ether	111444	10	1	--	--
Bis(2-Chloroisopropyl)ether	39638329	10	2	--	--
Bis(2-Ethylhexyl) phthalate	117817	10	5	--	--
2-Chlorophenol	95578	2	5	--	--
Chrysene	218019	--	10	5	--
Di-n-butyl phthalate	84742	--	10	--	--
Dibenzo(a,h)anthracene	53703	--	10	0.1	--
1,2-Dichlorobenzene (semivolatile)	95504	2	2	--	--
1,3-Dichlorobenzene (semivolatile)	541731	2	1	--	--
1,4-Dichlorobenzene (semivolatile)	106467	2	1	--	--
3,3-Dichlorobenzidine	91941	--	5	--	--
2,4-Dichlorophenol	120832	1	5	--	--
1,3-Dichloropropene	542756	--	5	--	
Diethyl phthalate	84662	10	2	--	--
Dimethyl phthalate	131113	10	2	--	--
2,4-Dimethylphenol	105679	1	2	--	--
2,4-Dinitrophenol	51285	5	5	--	--
2,4-Dinitrotoluene	121142	10	5	--	--
1,2-Diphenylhydrazine	122667	--	1	--	--
Fluoranthene	206440	10	1	0.05	--
Fluorene	86737	--	10	0.1	--
Hexachlorobenzene	118741	5	1	--	--
Hexachlorobutadiene	87683	5	1	--	--
Hexachlorocyclopentadiene	77474	5	5	--	--

Table II-2 continued on next page…

TENTATIVE

Table II-2 (Continued)
Minimum* Levels – Semi Volatile Chemicals

Semi-Volatile Chemicals	CAS Number	Minimum* Level (ug/L) GC Method [a,*]	GCMS Method [b,*]	HPLC Method [c,*]	COLOR Method [d]
Hexachloroethane	67721	5	1	--	--
Indeno(1,2,3-cd)pyrene	193395	--	10	0.05	--
Isophorone	78591	10	1	--	--
2-methyl-4,6-dinitrophenol	534521	10	5	--	--
3-methyl-4-chlorophenol	59507	5	1	--	--
N-nitrosodi-n-propylamine	621647	10	5	--	--
N-nitrosodimethylamine	62759	10	5	--	--
N-nitrosodiphenylamine	86306	10	1	--	--
Nitrobenzene	98953	10	1	--	--
2-Nitrophenol	88755	--	10	--	--
4-Nitrophenol	100027	5	10	--	--
Pentachlorophenol	87865	1	5	--	--
Phenanthrene	85018	--	5	0.05	--
Phenol	108952	1	1	--	50
Pyrene	129000	--	10	0.05	--
2,4,6-Trichlorophenol	88062	10	10	--	--

Table II-2 Notes:

a) GC Method = Gas Chromatography
b) GCMS Method = Gas Chromatography / Mass Spectrometry
c) HPLC Method = High Pressure Liquid Chromatography
d) COLOR Method= Colorimetric

* To determine the lowest standard concentration in an instrument calibration curve for this technique, multiply the given ML by 1000 (see Chapter III, "Use of Minimum* Levels").

TENTATIVE

TABLE II-3
MINIMUM* LEVELS - INORGANICS

Inorganic Substances	CAS Number	Minimum* Level (ug/L)								
		COLOR Method[a]	DCP Method[b]	FAA Method[c]	GFAA Method[d]	HYDRIDE Method[e]	ICP Method[f]	ICPMS Method[g]	SPGFAA Method[h]	CVAA Method[i]
Antimony	7440360	--	1000.	10.	5.	0.5	50.	0.5	5.	--
Arsenic	7440382	20.	1000.	--	2.	1.	10.	2.	2.	--
Beryllium	7440417	--	1000.	20.	0.5	--	2.	0.5	1.	--
Cadmium	7440439	--	1000.	10.	0.5	--	10.	0.2	0.5	--
Chromium (total)	--	--	1000.	50.	2.	--	10.	0.5	1.	--
Chromium (VI)	18540299	10.	--	5.	--	--	--	--	--	--
Copper	7440508	--	1000.	20.	5.	--	10.	0.5	2.	--
Cyanide	57125	5.	--	--	--	--	--	--	--	--
Lead	7439921	--	10000.	20.	5.	--	5.	0.5	2.	--
Mercury	7439976	--	--	--	--	--	--	0.5	--	0.2
Nickel	7440020	--	1000.	50.	5.	--	20.	1.	5.	--
Selenium	7782492	--	1000.	--	5.	1.	10.	2.	5.	--
Silver	7440224	--	1000.	10.	1.	--	10.	0.2	2.	--
Thallium	7440280	--	1000.	10.	2.	--	10.	1.	5.	--
Zinc	7440666	--	1000.	20.	--	--	20.	1.	10.	--

Table II-3 Notes

a) COLOR Method = Colorimetric
b) DCP Method = Direct Current Plasma
c) FAA Method = Flame Atomic Absorption
d) GFAA Method = Graphite Furnace Atomic Absorption
e) HYDRIDE Method = Gaseous Hydride Atomic Absorption
f) ICP Method = Inductively Coupled Plasma
g) ICPMS Method = Inductively Coupled Plasma / Mass Spectrometry
h) SPGFAA Method = Stabilized Platform Graphite Furnace Atomic Absorption (i.e., US EPA 200.9)
i) CVAA Method = Cold Vapor Atomic Absorption

* To determine the lowest standard concentration in an instrument calibration curve for these techniques, use the given ML (see Chapter III, "Use of Minimum* Levels").

DRAFT

TABLE II-4
MINIMUM* LEVELS – PESTICIDES AND PCBs

Pesticides – PCB's	CAS Number	Minimum* Level (ug/L) GC Method[a,*]
Aldrin	309002	0.005
Chlordane	57749	0.1
4,4'-DDD	72548	0.05
4,4'-DDE	72559	0.05
4,4'-DDT	50293	0.01
Dieldrin	60571	0.01
a-Endosulfan	959988	0.02
b-Endosulfan	33213659	0.01
Endosulfan Sulfate	1031078	0.05
Endrin	72208	0.01
Heptachlor	76448	0.01
Heptachlor Epoxide	1024573	0.01
a-Hexachlorocyclohexane	319846	0.01
b-Hexachlorocyclohexane	319857	0.005
d-Hexachlorocyclohexane	319868	0.005
g-Hexachlorocyclohexane (Lindane)	58899	0.02
PCB 1016	--	0.5
PCB 1221	--	0.5
PCB 1232	--	0.5
PCB 1242	--	0.5
PCB 1248	--	0.5
PCB 1254	--	0.5
PCB 1260	--	0.5
Toxaphene	8001352	0.5

Table II-4 Notes

a) GC Method = Gas Chromatography

* To determine the lowest standard concentration in an instrument calibration curve for this technique, multiply the given ML by 100 (see Chapter III, "Use of Minimum* Levels").

TENTATIVE

ATTACHMENT H – LIST OF PRIORITY POLLUTANTS

CTR Number	Parameter	CAS Number	Suggested Analytical Methods
1	Antimony	7440360	[1]
2	Arsenic	7440382	[1]
3	Beryllium	7440417	[1]
4	Cadmium	7440439	[1]
5a	Chromium (III)	16065831	[1]
5a	Chromium (VI)	18540299	[1]
6	Copper	7440508	[1]
7	Lead	7439921	[1]
8	Mercury	7439976	[1]
9	Nickel	7440020	[1]
10	Selenium	7782492	[1]
11	Silver	7440224	[1]
12	Thallium	7440280	[1]
13	Zinc	7440666	[1]
14	Cyanide	57125	[1]
15	Asbestos	1332214	[1]
16	2,3,7,8-TCDD	1746016	[1]
17	Acrolein	107028	[1]
18	Acrylonitrile	107131	[1]
19	Benzene	71432	[1]
20	Bromoform	75252	[1]
21	Carbon Tetrachloride	56235	[1]
22	Chlorobenzene	108907	[1]
23	Chlorodibromomethane	124481	[1]
24	Chloroethane	75003	[1]
25	2-Chloroethylvinyl Ether	110758	[1]
26	Chloroform	67663	[1]
27	Dichlorobromomethane	75274	[1]
28	1,1-Dichloroethane	75343	[1]
29	1,2-Dichloroethane	107062	[1]
30	1,1-Dichloroethylene	75354	[1]
31	1,2-Dichloropropane	78875	[1]
32	1,3-Dichloropropylene	542756	[1]
33	Ethylbenzene	100414	[1]
34	Methyl Bromide	74839	[1]
35	Methyl Chloride	74873	[1]
36	Methylene Chloride	75092	[1]
37	1,1,2,2-Tetrachloroethane	79345	[1]
38	Tetrachloroethylene	127184	[1]
39	Toluene	108883	[1]
40	1,2-Trans-Dichloroethylene	156605	[1]
41	1,1,1-Trichloroethane	71556	[1]
42	1,12-Trichloroethane	79005	[1]
43	Trichloroethylene	79016	[1]
44	Vinyl Chloride	75014	[1]
45	2-Chlorophenol	95578	[1]
46	2,4-Dichlorophenol	120832	[1]
47	2,4-Dimethylphenol	105679	[1]

TENTATIVE

CTR Number	Parameter	CAS Number	Suggested Analytical Methods
48	2-Methyl-4,6-Dinitrophenol	534521	[1]
49	2,4-Dinitrophenol	51285	[1]
50	2-Nitrophenol	88755	[1]
51	4-Nitrophenol	100027	[1]
52	3-Methyl-4-Chlorophenol	59507	[1]
53	Pentachlorophenol	87865	[1]
54	Phenol	108952	[1]
55	2,4,6-Trichlorophenol	88062	[1]
56	Acenaphthene	83329	[1]
57	Acenaphthylene	208968	[1]
58	Anthracene	120127	[1]
59	Benzidine	92875	[1]
60	Benzo(a)Anthracene	56553	[1]
61	Benzo(a)Pyrene	50328	[1]
62	Benzo(b)Fluoranthene	205992	[1]
63	Benzo(ghi)Perylene	191242	[1]
64	Benzo(k)Fluoranthene	207089	[1]
65	Bis(2-Chloroethoxy)Methane	111911	[1]
66	Bis(2-Chloroethyl)Ether	111444	[1]
67	Bis(2-Chloroisopropyl)Ether	108601	[1]
68	Bis(2-Ethylhexyl)Phthalate	117817	[1]
69	4-Bromophenyl Phenyl Ether	101553	[1]
70	Butylbenzyl Phthalate	85687	[1]
71	2-Chloronaphthalene	91587	[1]
72	4-Chlorophenyl Phenyl Ether	7005723	[1]
73	Chrysene	218019	[1]
74	Dibenzo(a,h)Anthracene	53703	[1]
75	1,2-Dichlorobenzene	95501	[1]
76	1,3-Dichlorobenzene	541731	[1]
77	1,4-Dichlorobenzene	106467	[1]
78	3,3'-Dichlorobenzidine	91941	[1]
79	Diethyl Phthalate	84662	[1]
80	Dimethyl Phthalate	131113	[1]
81	Di-n-Butyl Phthalate	84742	[1]
82	2,4-Dinitrotoluene	121142	[1]
83	2,6-Dinitrotoluene	606202	[1]
84	Di-n-Octyl Phthalate	117840	[1]
85	1,2-Diphenylhydrazine	122667	[1]
86	Fluoranthene	206440	[1]
87	Fluorene	86737	[1]
88	Hexachlorobenzene	118741	[1]
89	Hexachlorobutadiene	87863	[1]
90	Hexachlorocyclopentadiene	77474	[1]
91	Hexachloroethane	67721	[1]
92	Indeno(1,2,3-cd)Pyrene	193395	[1]
93	Isophorone	78591	[1]
94	Naphthalene	91203	[1]
95	Nitrobenzene	98953	[1]
96	N-Nitrosodimethylamine	62759	[1]
97	N-Nitrosodi-n-Propylamine	621647	[1]
98	N-Nitrosodiphenylamine	86306	[1]

TENTATIVE

CTR Number	Parameter	CAS Number	Suggested Analytical Methods
99	Phenanthrene	85018	[1]
100	Pyrene	129000	[1]
101	1,2,4-Trichlorobenzene	120821	[1]
102	Aldrin	309002	[1]
103	alpha-BHC	319846	[1]
104	beta-BHC	319857	[1]
105	gamma-BHC	58899	[1]
106	delta-BHC	319868	[1]
107	Chlordane	57749	[1]
108	4,4'-DDT	50293	[1]
109	4,4'-DDE	72559	[1]
110	4,4'-DDD	72548	[1]
111	Dieldrin	60571	[1]
112	alpha-Endosulfan	959988	[1]
113	beta-Endosulfan	33213659	[1]
114	Endosulfan Sulfate	1031078	[1]
115	Endrin	72208	[1]
116	Endrin Aldehyde	7421934	[1]
117	Heptachlor	76448	[1]
118	Heptachlor Epoxide	1024573	[1]
119	PCB-1016	12674112	[1]
120	PCB-1221	11104282	[1]
121	PCB-1232	11141165	[1]
122	PCB-1242	53469219	[1]
123	PCB-1248	12672296	[1]
124	PCB-1254	11097691	[1]
125	PCB-1260	11096825	[1]
126	Toxaphene	8001352	[1]

[1] Pollutants shall be analyzed using the methods described in 40 CFR Section 136.

TENTATIVE