Dist	COUNTY	ROUTE	POST MILES TOTAL PROJECT	SHEET NO.	TOTAL SHEETS
01	Hum	101	R15.0, 29		

REGISTERED CIVIL ENGINEER 00-00-00 DATE

Month, Day, Year

PLANS APPROVAL DATE

THE STATE OF CALIFORNIA OR ITS OFFICERS OR AGENTS SHALL NOT BE RESPONSIBLE FOR THE ACCURACY OR COMPLETENESS OF SCANNED COPIES OF THIS PLAN SHEET.

PRELIMINARY DESIGN FOR REVIEW ONLY

REGISTERED PROFESSIONAL ENGINEER D.M.EDWARDS No. C-51898 Exp. 6-30-16 CIVIL STATE OF CALIFORNIA

NOTES:

1. FOR ACCURATE RIGHT OF WAY AND ACCESS DATA, CONTACT RIGHT OF WAY ENGINEERING AT THE DISTRICT OFFICE.

LEGEND

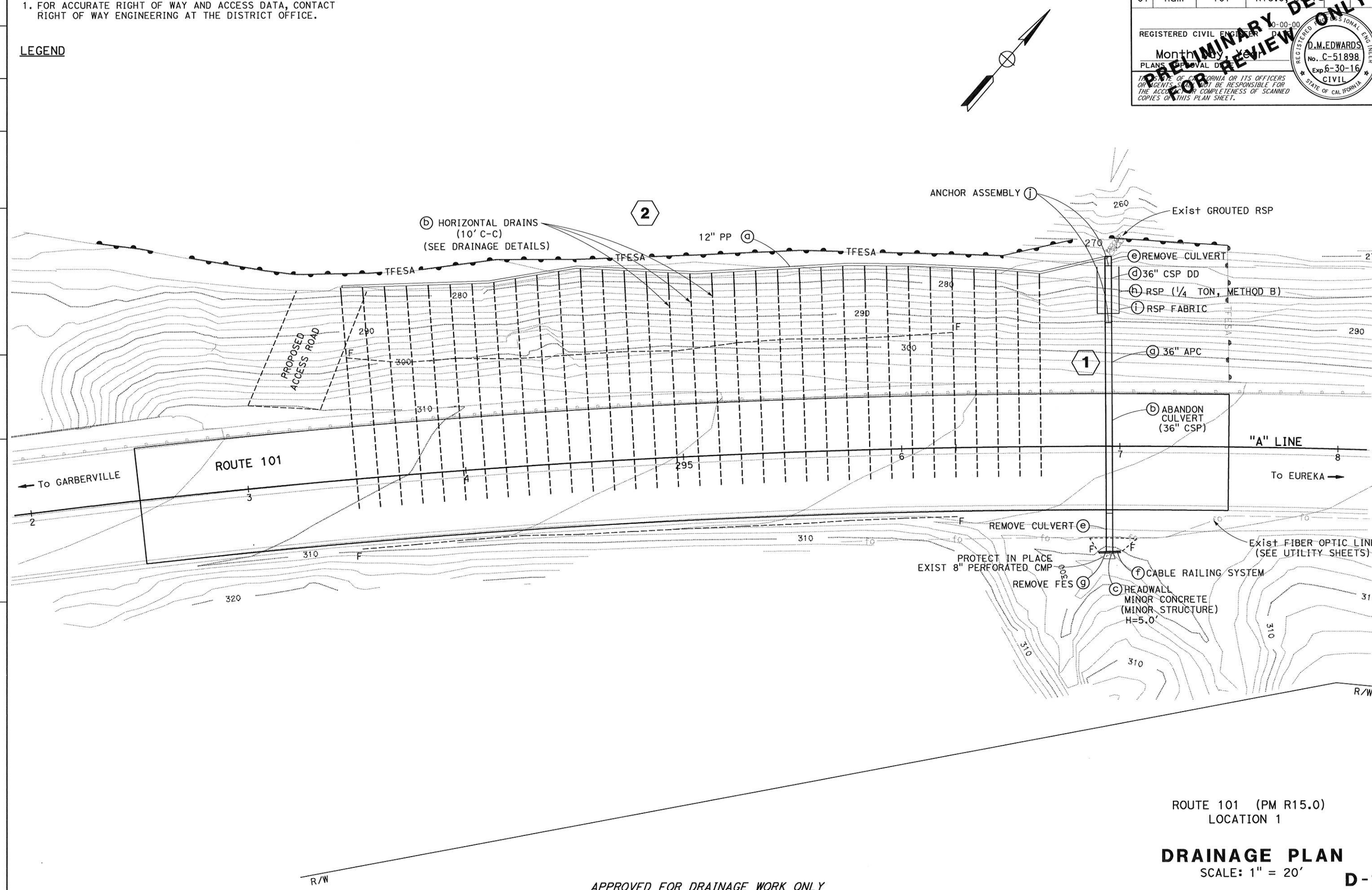

ROUTE 101 (PM R15.0)
LOCATION 1

DRAINAGE PLAN

SCALE: 1" = 20'

D-1

APPROVED FOR DRAINAGE WORK ONLY

STATE OF CALIFORNIA - DEPARTMENT OF TRANSPORTATION

Caltrans DESIGN

FUNCTIONAL SUPERVISOR: KELLY B. TIMMONS

CALCULATED-DESIGNED BY: DIANNE EDWARDS

CHECKED BY

REVISED BY

DATE REVISED

P:\PROJ\01\0B400\design\1_From_Jeff\Revised Drainage Plans\01120001241a001.dgn

LAST REVISION 09-15-14

DATE PLOTTED => 09-DEC-2014
TIME PLOTTED => 11:04

BORDER LAST REVISED 7/2/2010

USERNAME => s109509
DGN FILE => 01120001241a001.dgn

RELATIVE BORDER SCALE IS IN INCHES 0 1 2 3

UNIT 0312

PROJECT NUMBER & PHASE 01120001241

Dist	COUNTY	ROUTE	POST MILES TOTAL PROJECT	SHEET NO.	TOTAL SHEETS
01	Hum	101	R15.0, 29.4		

REGISTERED CIVIL ENGINEER 00-00-00 DATE

Month Day, Year

PLANS APPROVAL DATE

THE STATE OF CALIFORNIA OR ITS OFFICERS OR AGENTS SHALL NOT BE RESPONSIBLE FOR THE ACCURACY OR COMPLETENESS OF SCANNED COPIES OF THIS PLAN SHEET.

PRELIMINARY DESIGN FOR REVIEW ONLY

REGISTERED PROFESSIONAL ENGINEER D.M.EDWARDS No. C-51898 Exp. 6-30-16 CIVIL STATE OF CALIFORNIA

NOTES:

1. FOR ACCURATE RIGHT OF WAY AND ACCESS DATA, CONTACT RIGHT OF WAY ENGINEERING AT THE DISTRICT OFFICE.

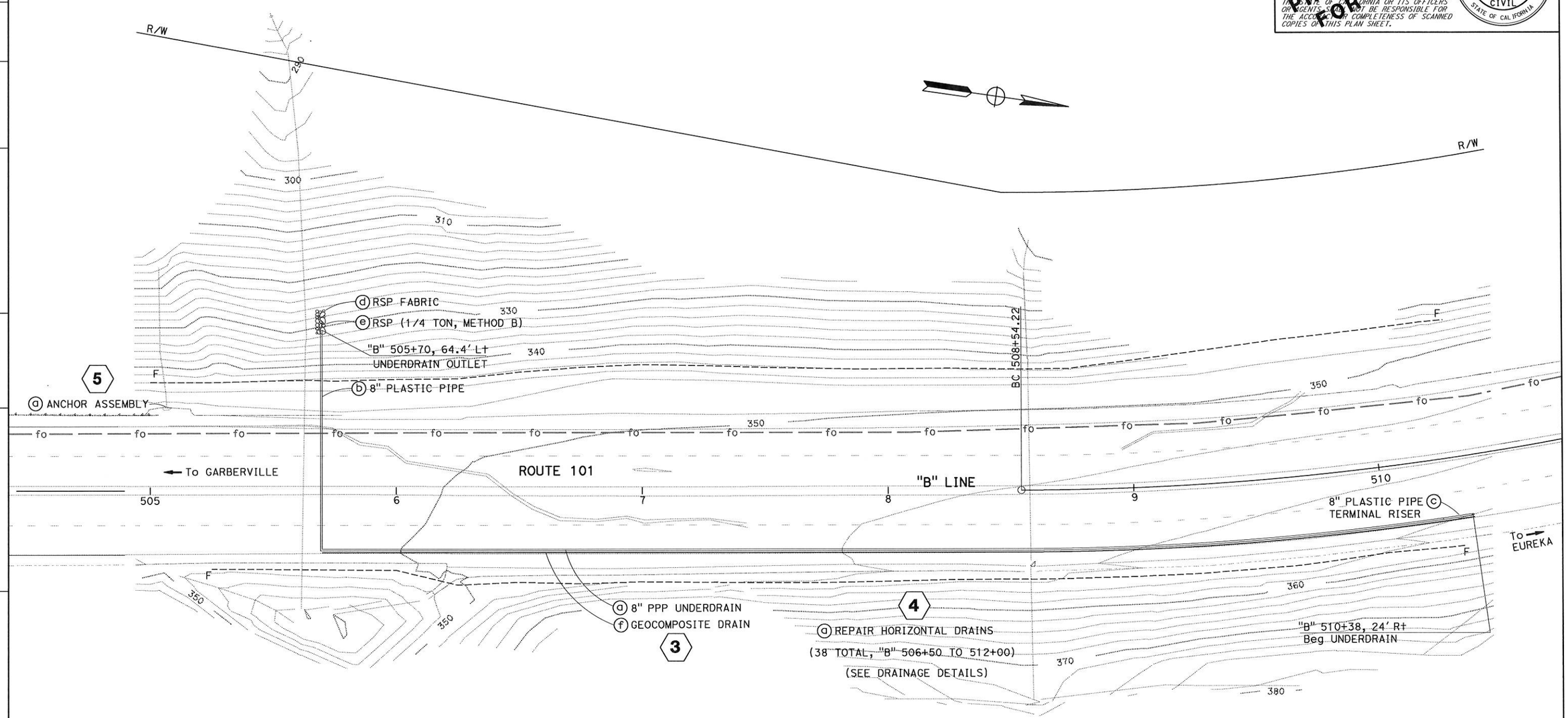

ROUTE 101 (PM 29.4)
LOCATION 2

DRAINAGE PLAN

SCALE: 1" = 20'

D-2

APPROVED FOR DRAINAGE WORK ONLY

DIANNE EDWARDS

CALCULATED-DESIGNED BY

CHECKED BY

REVISED BY

DATE REVISED

FUNCTIONAL SUPERVISOR

KELLY B. TIMMONS

STATE OF CALIFORNIA - DEPARTMENT OF TRANSPORTATION

Caltrans

DESIGN

P:\PROJ\01\0B400\design\1_From_Jeff\Revised Drainage Plans\01120001241a002.dgn

LAST REVISION 09-15-14

DATE PLOTTED => 09-DEC-2014

TIME PLOTTED => 11:33

Dist.	COUNTY	ROUTE	POST MILES TOTAL PROJECT	SHEET	TOTAL SHEETS
01	Hum	101	R15.0, 2[illegible]		

REGISTERED CIVIL ENGINEER 00-00-00 DATE
Month, Day, Year
PLANS APPROVAL DATE

THE STATE OF CALIFORNIA OR ITS OFFICERS OR AGENTS SHALL NOT BE RESPONSIBLE FOR THE ACCURACY OR COMPLETENESS OF SCANNED COPIES OF THIS PLAN SHEET.

REGISTERED PROFESSIONAL ENGINEER D.M.EDWARDS No. C-51898 Exp. 6-30-16 CIVIL STATE OF CALIFORNIA

PRELIMINARY DESIGN FOR REVIEW ONLY

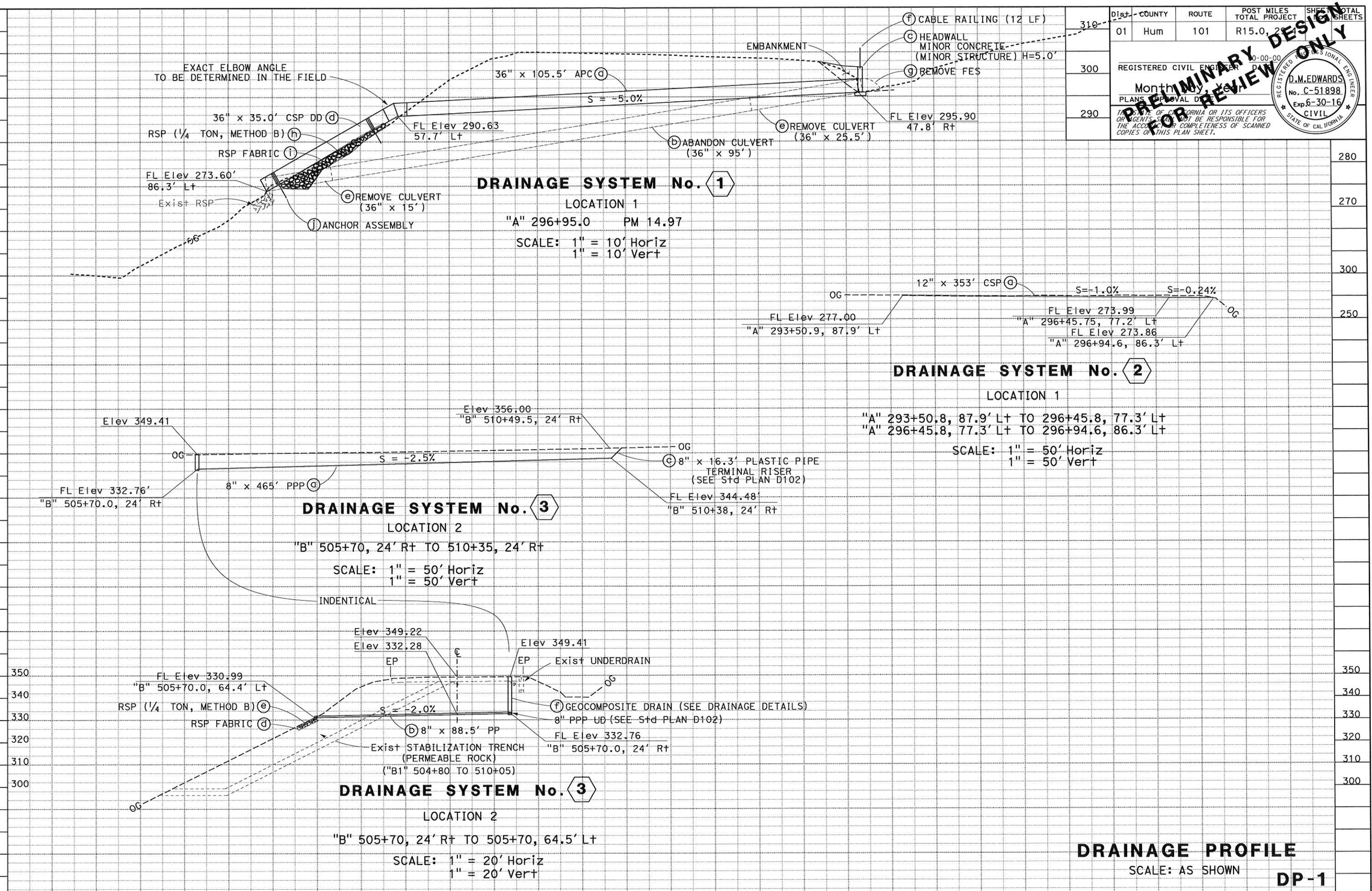

STATION	
CY	Exc
	Emb

REVISED BY | DATE REVISED

DIANNE EDWARDS

CALCULATED-DESIGNED BY | CHECKED BY

FUNCTIONAL SUPERVISOR: KELLY B. TIMMONS

STATE OF CALIFORNIA - DEPARTMENT OF TRANSPORTATION

Caltrans® DESIGN

P:\PROJ\01\08400\design\1_From_Jeff\11-24-14\0112000124ib001.dgn

DATE PLOTTED => 08-DEC-2014
TIME PLOTTED => 17:59
LAST REVISION 09-15-14

TOTAL

BORDER LAST REVISED 7/2/2010

USERNAME => s109509
DGN FILE => 0112000124ib001.dgn

RELATIVE BORDER SCALE IS IN INCHES 0 1 2 3

UNIT 0312

PROJECT NUMBER & PHASE 01120001241

Dist	COUNTY	ROUTE	POST MILES TOTAL PROJECT	SHEET No.	TOTAL SHEETS
01	Hum	101	R15.0, 29		

REGISTERED CIVIL ENGINEER 00-00-00 DATE

Month, Day, Year

PLANS APPROVAL DATE

THE STATE OF CALIFORNIA OR ITS OFFICERS OR AGENTS SHALL NOT BE RESPONSIBLE FOR THE ACCURACY OR COMPLETENESS OF SCANNED COPIES OF THIS PLAN SHEET.

PRELIMINARY DESIGN FOR REVIEW ONLY

REGISTERED PROFESSIONAL ENGINEER D.M.EDWARDS No. C-51898 Exp. 6-30-16 CIVIL STATE OF CALIFORNIA

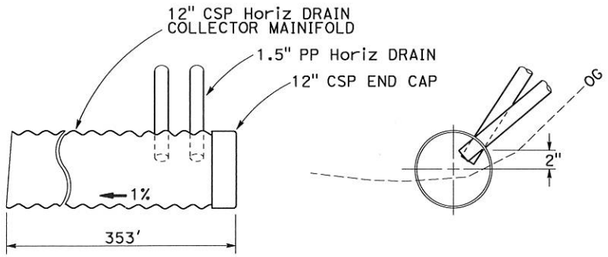

12" CSP COLLECTOR SYSTEM

2

LOCATION 2

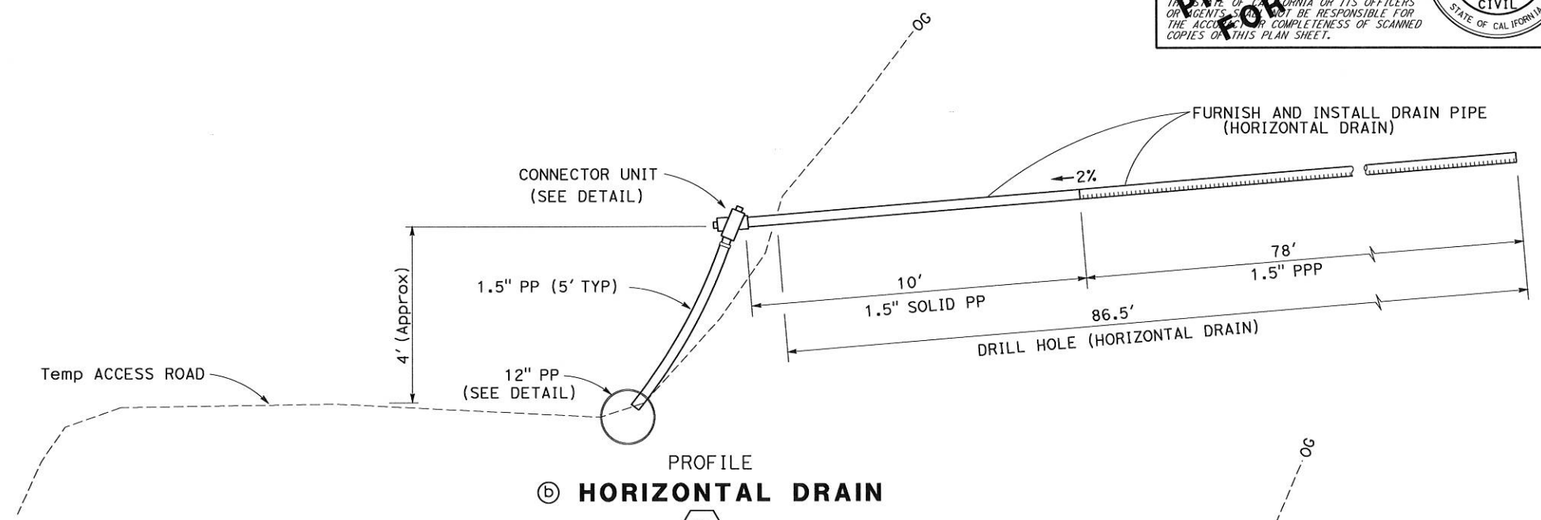

PROFILE

ⓑ HORIZONTAL DRAIN

2

LOCATION 1

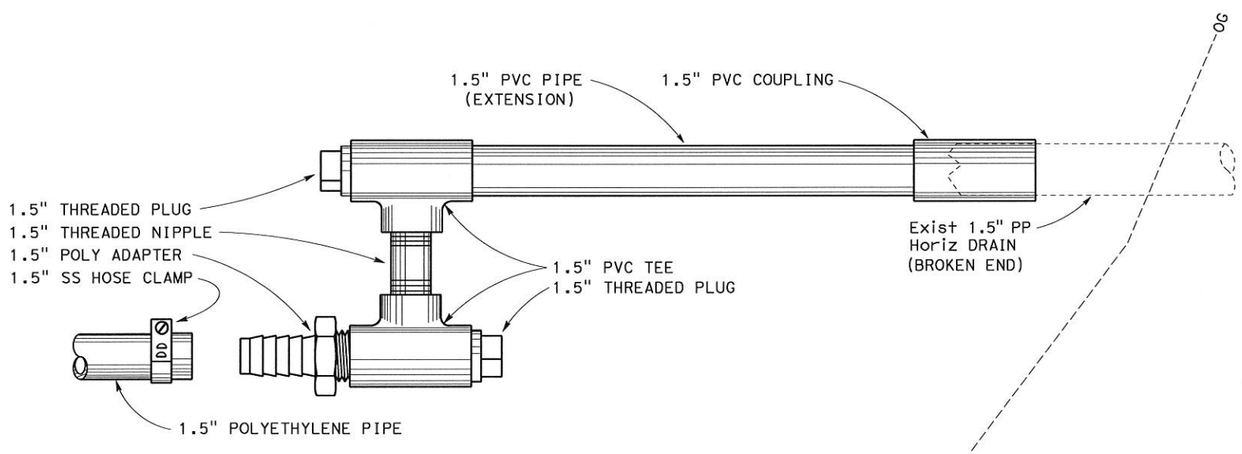

PLAN VIEW

HORIZONTAL DRAIN REPAIR AND CONNECTOR UNIT

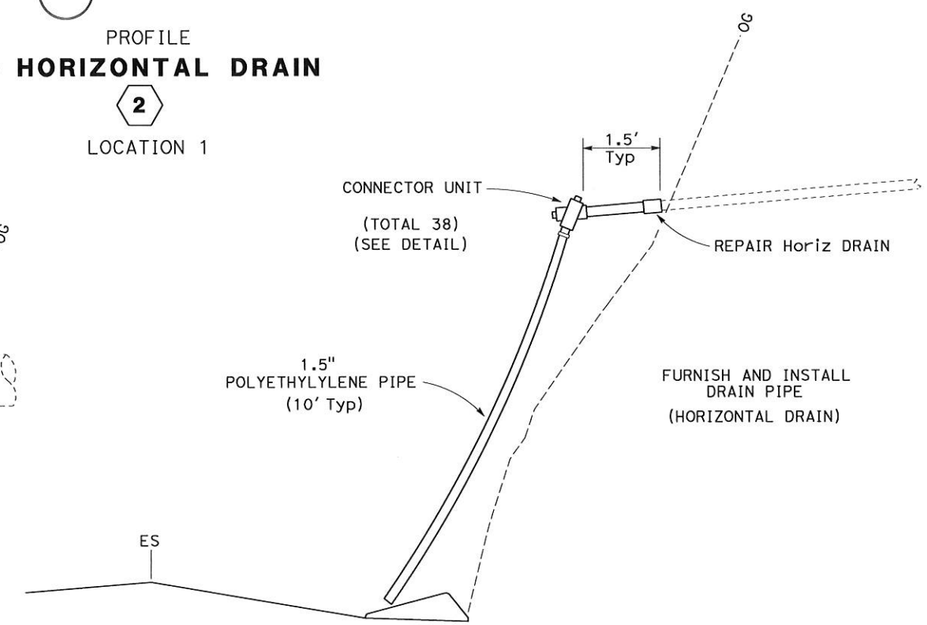

PROFILE

ⓐ HORIZONTAL DRAIN

4

LOCATION 2

DRAINAGE DETAILS

NO SCALE

DD-1

STATE OF CALIFORNIA - DEPARTMENT OF TRANSPORTATION

Caltrans DESIGN

FUNCTIONAL SUPERVISOR: KELLY B. TIMMONS

CALCULATED-DESIGNED BY: DIANNE EDWARDS

CHECKED BY

REVISED BY

DATE REVISED

P:\PROJ\01\08400\design\1_From_Jeff\Revised Drainage Plans\01120001241c001.dgn

LAST REVISION 09-15-14

DATE PLOTTED => 09-DEC-2014

TIME PLOTTED => 11:08