ORDER NO. R1-2017-0002
NPDES NO. CA0022756
WDID NO. 1A84006ODN

WASTE DISCHARGE REQUIREMENTS AND WATER RECYCLING REQUIREMENTS

FOR THE

CITY OF CRESCENT CITY
WASTEWATER TREATMENT FACILITY
DEL NORTE COUNTY

The following Permittee is subject to waste discharge requirements (WDRs) and water recycling requirements set forth in this Order:

Table 1. Permittee Information

Permittee	City of Crescent City
Name of Facility	Wastewater Treatment Facility
Facility Address	210 Battery Street
	Crescent City, CA 95531
	Del Norte County
Type of Facility	Publicly Owned Treatment Works (POTW)
Facility Design Flow	1.86 million gallons per day (mgd) (average dry weather treatment capacity) 6.12 mgd (peak wet weather treatment capacity)

Table 2. Discharge Location

Discharge Point	Effluent Description	Discharge Point Latitude (North)	Discharge Point Longitude (West)	Receiving Water
001	Secondary treated wastewater	41° 44’ 38”	124° 12’ 10”	Pacific Ocean
002	Tertiary treated wastewater	--	--	Recycled Water System

DRAFT

Table 3. Administrative Information

This Order was adopted on:	**January 26, 2017**
This Order shall become effective on:	**April 1, 2017**
This Order shall expire on:	**March 31, 2022**
The Permittee shall file a Report of Waste Discharge as an application for reissuance of WDRs in accordance with title 23, California Code of Regulations, and an application for reissuance of a National Pollutant Discharge Elimination System (NPDES) permit no later than:	**April 1, 2021**
The U.S. Environmental Protection Agency (U.S. EPA) and the California Regional Water Quality Control Board, North Coast Region have classified this discharge as follows:	Major

IT IS HEREBY ORDERED, that Waste Discharge Requirements (WDR) Order No. R1-2011-0019 and Monitoring and Reporting Program (MRP) No. R1-2011-0019, are rescinded upon the effective date of this Order except for enforcement purposes, and in order to meet the provisions contained in division 7 of the California Water Code (Water Code) (commencing with section 13000) and regulations and guidelines adopted thereunder, and the provisions of the federal Clean Water Act (CWA) and regulations and guidelines adopted thereunder, the Permittee shall comply with the requirements of this Order. This action in no way prevents the North Coast Regional Water Quality Control Board (Regional Water Board) from taking enforcement action for past violations of the previous permit.

I, Matthias St. John, Executive Officer, do hereby certify that this Order with all attachments is a full, true, and correct copy of the Order adopted by the California Regional Water Quality Control Board, North Coast Region, on **January 26, 2017.**

_____
Matthias St. John, Executive Officer

160926_City of Crescent City_WWTF_Tentative Draft

DRAFT

Contents

I. Facility Information 4
II. Findings 4
III. Discharge Prohibitions 4
IV. Effluent Limitations and Discharge Specifications 5
  A. Effluent Limitations – Discharge Point 001 5
  B. Land Discharge Specifications and Requirements – Not Applicable 6
  C. Water Recycling Specifications and Requirements – Discharge Point 002 6
V. Receiving Water Limitations 10
  A. Surface Water Limitation 10
  B. Groundwater Limitations 12
VI. Provisions 13
  A. Standard Provisions 13
  B. Monitoring and Reporting Program (MRP) Requirements 13
  C. Special Provisions 13
VII. Compliance Determination 21

Tables

Table 1. Permittee Information 1
Table 2. Discharge Location 1
Table 3. Administrative Information 2
Table 4. Effluent Limitations 5
Table 5. Recycling Discharge Specifications 6

Attachments

Attachment A – Definitions A-1
Attachment B – Map B-1
Attachment C – Flow Schematic C-1
Attachment D – Standard Provisions D-1
Attachment E – Monitoring and Reporting Program E-1
Attachment F – Fact Sheet F-1

DRAFT

I. FACILITY INFORMATION

Information describing the City of Crescent City (Permittee), Wastewater Treatment Facility (Facility) is summarized in Table 1 and in sections I and II of the Fact Sheet (Attachment F). Section I of the Fact Sheet also includes information regarding the Facility's permit application.

II. FINDINGS

The California Regional Water Quality Control Board, North Coast Region (Regional Water Board), finds:

A. Legal Authorities. This Order is issued pursuant to section 402 of the federal Clean Water Act (CWA) and implementing regulations adopted by the U.S. Environmental Protection Agency (U.S. EPA) and chapter 5.5, division 7 of the California Water Code (commencing with section 13370). It shall serve as a NPDES permit authorizing the Permittee to discharge into waters of the United States at the discharge location described in Table 2 subject to the Waste Discharge Requirements (WDRs). This Order also serves as WDRs pursuant to article 4, chapter 4, division 7 of the Water Code (commencing with section 13260).

B. Basis and Rationale for Requirements. The Regional Water Board developed the requirements in this Order based on information submitted as part of the Permittee's application, monitoring and reporting programs, and other available information. The Fact Sheet (Attachment F) contains background information and rationale for the requirements in this Order, and is hereby incorporated into this Order and constitutes Findings for this Order. Attachments A through E are also incorporated into this Order.

C. Provisions and Requirements Implementing State Law. The provisions/requirements in subsections III.E, III.F, IV.B, IV.C, V.B, and VI.C.5 of this Order and sections VII, IX.A, IX.C, and X.E of the Monitoring and Reporting Program are included to implement state law only. These provisions/requirements are not required or authorized under the federal CWA; consequently, violations of these provisions/requirements are not subject to the enforcement remedies that are available for NPDES violations.

D. Notification of Interested Parties. The Regional Water Board has notified the Permittee and interested agencies and persons of its intent to prescribe WDRs for the discharge and has provided them with an opportunity to submit their written comments and recommendations. Details of the notification are provided in the Fact Sheet.

E. Consideration of Public Comment. The Regional Water Board, in a public meeting, heard and considered all comments pertaining to the discharge. Details of the Public Hearing are provided in the Fact Sheet.

III. DISCHARGE PROHIBITIONS

A. The discharge of any waste not disclosed by the Permittee or not within the reasonable contemplation of the Regional Water Board is prohibited.

B. Creation of pollution, contamination, or nuisance, as defined by section 13050 of the Water Code is prohibited.

C. The discharge of sludge or digester supernatant is prohibited, except as authorized under section VI.C.5.c of this Order (Sludge Disposal and Handling Requirements).

D. The discharge or recycling use of untreated or partially treated waste (receiving a lower level of treatment than described in section II.A of the Fact Sheet) from anywhere within the collection, treatment, or disposal systems is prohibited, except as provided for in Attachment D, Standard Provisions G (Bypass) and H (Upset).

DRAFT

E. Any sanitary sewer overflow (SSO) that results in a discharge of untreated or partially treated wastewater to (a) waters of the state or (b) land and creates pollution, contamination, or nuisance, as defined in Water Code section 13050 is prohibited.

F. The discharge of waste to land that is not owned by the Permittee, governed by City ordinance, or under agreement to use by the Permittee, or for which the Permittee has explicitly permitted such use, is prohibited, except for use for fire suppression as provided in title 22, sections 60307(a) and 60307(b) of the California Code of Regulations (CCR).

G. The discharge of waste at any point not described in Finding II.B of the Fact Sheet or authorized by a permit issued by the State Water Resources Control Board (State Water Board) or another Regional Water Board is prohibited.

H. The average dry weather flow of waste through the Facility shall not exceed 1.86 mgd, measured daily and averaged over a calendar month. The peak daily wet weather flow of waste through the Facility shall not exceed 6.12 mgd, measured daily. Compliance with this prohibition shall be determined as defined in sections VII.J and VII.K of this Order.

I. The discharge of any radiological, chemical, or biological warfare agent or high-level radioactive waste into waters of the state is prohibited.

J. The discharge of sludge directly into the ocean or into a waste stream that discharges to the ocean is prohibited.

K. The by-passing of untreated wastes containing concentrations of pollutants in excess of those of Ocean Plan Tables 1 or 2 (2012) is prohibited.

L. The acceptance of septage to a location other than an approved septage receiving station is prohibited.

IV. EFFLUENT LIMITATIONS AND DISCHARGE SPECIFICATIONS

A. Effluent Limitations – Discharge Point 001

1. Final Effluent Limitations – Discharge Point 001

a. The discharge of secondary treated wastewater shall maintain compliance with the following effluent limitations at Discharge Point 001, with compliance measured at Monitoring Location EFF-001 as described in the Monitoring and Reporting Program (MRP) (Attachment E).

Table 4. Effluent Limitations

Parameter	Units	Effluent Limitations[1]					
		Average Monthly	Average Weekly	Maximum Daily	Instantaneous Minimum	Instantaneous Maximum	6-Month Median
Biochemical Oxygen Demand 5-day @ 20°C (BOD_5)	mg/L	30	45	--	--	--	--
	lbs/day[2]	465	700	--	--	--	--
Oil and Grease	mg/L	25	40	--	--	75	--
Total Suspended Solids (TSS)	mg/L	30	45	--	--	--	--
	lbs/day[2]	465	700	--	--	--	--
Settleable Solids	mL/L	1.0	1.5	--	--	3.0	--
Turbidity	NTU	75	100	--	--	225	--
pH	s.u.	--	--	--	6.0	9.0	--
Copper, Total Recoverable	µg/L	--	--	300	--	840	32

DRAFT

Parameter	Units	Effluent Limitations[1]					
		Average Monthly	Average Weekly	Maximum Daily	Instantaneous Minimum	Instantaneous Maximum	6-Month Median
Nickel, Total Recoverable	µg/L	--	--	600	--	1,500	150
Total Residual Chlorine	µg/L	--	--	240	--	1,800	60
Bis(2-ethylhexyl) phthalate	µg/L	110	--	--	--	--	--
Dieldrin	µg/L	0.0012	--	--	--	--	--
TCDD Equivalents[3]	µg/L	1.2×10^{-7}	--	--	--	--	--
Tetrachloroethylene	µg/L	60	--	--	--	--	--

Table Notes:
1. See Definitions in Attachment A and Compliance Determination discussion in section VII of this Order.
2. Mass-based effluent limitations are based on the average dry weather design flow of 1.86 mgd.
3. The sum of the concentrations of chlorinated dibenzodioxins (2,3,7,8-CDDs) and chlorinated dibenzofurans (2,3,7,8-CDFs) multiplied by their respective toxicity factors, as identified in the Ocean Plan.

b. Percent Removal. The average monthly percent removal of BOD_5 and TSS shall not be less than 85 percent. Percent removal shall be determined from the monthly average value of influent wastewater concentration in comparison to the monthly average value of effluent concentration for the same constituent over the same time period as measured at Monitoring Locations INF-001 and EFF-001, respectively.

c. Disinfection. Disinfected effluent discharged from the wastewater treatment plant through Discharge Point 001 to the Pacific Ocean shall not contain fecal coliform bacteria exceeding the following concentrations, as measured at Monitoring Location EFF-001:

i. The median value of fecal coliform bacteria shall not exceed a Most Probable Number (MPN) of 14 per 100 milliliters (mL) in a calendar month;

ii. No more than 10% of samples collected in a calendar month shall exceed an MPN of 43 per 100 mL; and

iii. No single sample shall exceed an MPN of 400 per 100 mL.

2. Interim Effluent Limitations – Not Applicable

This Order does not establish interim effluent limitations or schedules for compliance with final limitations.

B. Land Discharge Specifications and Requirements – Not Applicable

This Order does not authorize discharges to land.

C. Water Recycling Specifications and Requirements – Discharge Point 002

1. Water Recycling Specifications

a. When discharging to the recycled water system, the Permittee shall maintain compliance with the following limitations at Discharge Point 002, with compliance measured at Monitoring Location REC-001, as described in the attached MRP.

Table 5. Recycling Discharge Specifications

Parameter	Units	Discharge Specifications[1]				
		Average	Average	Maximum	Instantaneous	Instantaneous

DRAFT

		Monthly	Weekly	Daily	Minimum	Maximum
Biochemical Oxygen Demand 5-day @ 20°C (BOD_5)	mg/L	10	15	--	--	--
Total Suspended Solids (TSS)	mg/L	10	15	--	--	--
Settleable Solids	mL/L	0.1	--	0.2	--	--
pH	s.u.	--	--	--	6.0	9.0
Table Notes: 1. See Definitions in Attachment A and Compliance Determination discussion in section VII of this Order.						

b. **Disinfection.** Disinfected effluent discharged from the Facility to the recycled water system at Discharge Point 002 shall not contain total coliform bacteria exceeding the following concentrations, as measured at Monitoring Location REC-001:

i. The median concentration shall not exceed an MPN of 2.2 per 100 mL, using the bacteriological results of the last 7 days for which analysis have been completed[1]:

ii. The number of total coliform bacteria shall not exceed an MPN of 23 per 100 mL, in more than one sample in any 30-day period; and

iii. No sample shall exceed an MPN of 240 total coliform bacteria per 100 mL.

2. Water Recycling Requirements

a. This Order includes water recycling requirements that apply to the production of recycled water. The Permittee shall obtain permit coverage for the use of recycled water, prior to initiating recycled water use.

b. The Permittee shall comply with applicable state and local requirements regarding the production and use of recycled water, including requirements of Water Code sections 13500 – 13577 (Water Reclamation) and State Water Board, Division of Drinking Water (DDW) regulations at title 22, sections 60301 – 60357 of the CCR (Water Recycling Criteria).

3. Filtration Process Requirements

a. **Filtration Rate.** When discharging to the recycled water system, the rate of filtration through the tertiary filters, as measured at Monitoring Location INT-001A, shall not exceed 5 gallons per minute per square foot of surface area or other filtration rates authorized in writing by the Regional Water Board Executive Officer and under conditions recommended by DDW.

b. **Turbidity.** When discharging to the recycled water system, the effluent from the filtration system shall at all times be filtered such that the filtered effluent does not exceed any of the following specifications at Monitoring Location INT-001B prior to discharge to the disinfection unit:

i. 0.2 NTU more than 5 percent of the time during any 24-hour period; and

ii. 0.5 NTU at any time.

c. Filtered effluent in excess of the turbidity specifications shall not enter the recycling distribution system. Filtered effluent in excess of turbidity specifications shall be automatically diverted to an upstream treatment process unit or to emergency storage

[1] See section VII.H of this Order regarding compliance with the 7-day median coliform requirement.

DRAFT

as soon as the Permittee is aware of the exceedance. The Permittee shall provide notification of non-compliance with the filtration process requirements as required in section IX.C.1.c of the MRP (Attachment E).

4. Disinfection Process Requirements

When discharging to the recycled water system, the Permittee shall operate the ultraviolet light (UV) disinfection system in accordance with the operating protocol and technical and administrative requirements set out by DDW in order to ensure compliance with disinfection water recycling specifications in section IV.C.1.b of this Order. Specifically, the Permittee shall:

a. Disinfect tertiary treated wastewater using a disinfection process that, when combined with the filtration process, has been demonstrated to inactivate and/or remove 99.999 percent of the plaque forming units of F-specific bacteriophage MS2, or polio virus in the wastewater. At a minimum, the Permittee shall demonstrate a 99.99 percent removal and/or inactivation of MS2 through the UV disinfection system only.

b. Provide continuous, reliable monitoring of flow, UV transmittance, UV intensity, UV dose, and UV power at Monitoring Location INT-002, and turbidity at Monitoring Location INT-001B. The Permittee must demonstrate compliance with the UV dose requirement.

c. Operate the UV disinfection system to provide a minimum UV dose of 80 millijoules per square centimeter (mJ/cm^2) at all times at Monitoring Location INT-002, unless otherwise approved by DDW.

d. The equations below must be used as part of the automatic UV disinfection control system for calculating UV dose.

RED = 10(1.49425 - 0.38577 * log (Q) -0.51275 * log (UVA) +0.40133*log (sensor))

And

Sensor Intensity High power = 10.465 (UVT) - 412.2

OR

Sensor Intensity Low power = 7.8655 (UVT) - 302.29

Where:

RED = Delivered UV dose per Reactor (mJ/cm^2);

Q = flow in gpm [gallons per minute];

UVA = UV absorbance at 254 nm (%);

UVT = % UV transmittance at 254 nm (%).

e. Ensure that the UV transmittance (at least 254 nanometers) in the wastewater does not fall below 65 percent of maximum at any time, unless otherwise approved by DDW.

f. Visually inspect the quartz sleeves and cleaning system components per the manufacturer's operation manual for physical wear (scoring, solarization, seal leaks, etc.) and to check the efficacy of the cleaning system.

g. Wipe/clean the quartz sleeves at least every 24 hours following the manufacturer's procedures to ensure the minimum required UV dose delivery is consistently achieved. Cleaning intervals shall be increased as necessary to ensure compliance with permit requirements such as UV dose and total coliform organism requirements.

DRAFT

h. Operate the UV disinfection system in accordance with an approved operations and maintenance plan, which specifies clearly the operational limits and responses required for critical alarms. The Permittee shall maintain a copy of the approved operations plan at the treatment plant and make the plan readily available to operations personnel and regulatory agencies. The Permittee shall post a quick reference plant operations data sheet at the treatment plant. The data sheet shall include the following information:

i. The alarm set points for secondary and tertiary turbidity, high and low flow, UV dose and transmittance, UV lamp operations hours, and power.

ii. The values of secondary and tertiary turbidity, high and low flow, UV dose and transmittance, UV lamp operation hours, and power when flow must be diverted to waste.

iii. The values of high daily and weekly median total coliform when an operational response must be taken.

iv. The required frequency of calibration for all meters measuring turbidity, flow, UV transmittance, and power.

v. The required frequency of mechanical cleaning/wiping and equipment inspection.

vi. The UV lamp age tracking procedures and replacement intervals.

i. Replace lamps every 7,000 hours of operation, or sooner, if there are indications that the lamps are failing to provide adequate disinfection. The Permittee shall maintain lamp age and lamp replacement records for a time period consistent with the record retention requirements in the Standard Provisions (Attachment D, Section IV).

j. Properly calibrate flow meters and UV transmittance (UVT) monitors to ensure proper disinfection.

k. Inspect the UVT meter and check against a reference bench-top unit weekly to document accuracy.

l. Recalibrate the on-line UVT analyzer by a procedure recommended by the manufacturer if the on-line analyzer UVT reading varies from the bench-top spectrophotometer UVT reading by 2 percent or more.

m. Operate the UV disinfection system with a built-in automatic reliability feature that must be triggered when the system is below the target UV dose. If the measured UV dose goes below the minimum UV dose, the UV reactor in question must alarm and startup the next available row of UV lamps or UV lamp bank.

n. Not allow equivalent or substitutions of equipment to occur without an adequate demonstration of equivalent disinfection performance to the satisfaction and approval of DDW.

o. Until adequate redundancy and reliability is provided and demonstrated, ensure that flow through the UV disinfection system does not exceed 0.6 mgd as a daily maximum. Upon demonstration of adequate redundancy and reliability, ensure that flow through the UV disinfection system does not exceed 1.2 mgd as a daily maximum, unless otherwise approved by DDW.

DRAFT

V. RECEIVING WATER LIMITATIONS

A. Surface Water Limitation

Receiving water limitations are based on water quality objectives contained in the Ocean Plan, and are a required part of this Order. Receiving water conditions not in conformance with the limitation are not necessarily a violation of this Order. The Regional Water Board may require an investigation to determine cause and culpability prior to asserting that a violation has occurred.

Discharges from the Facility shall not cause the following in the receiving water upon completion of initial dilution:

1. Ocean Plan

a. Bacterial Characteristics

i. Water-Contact Standards. Within a zone bounded by the shoreline and a distance of 1,000 feet from the shoreline or the 30-foot depth contour, whichever is further from the shoreline, and in areas outside this zone designated for water contact recreation use by the Regional Water Board, but including all kelp beds, the following bacteriological objectives shall be maintained throughout the water column:

(a) 30-Day Geometric Mean – The following standards are based on the geometric mean of the five most recent samples from each receiving water monitoring location.

(1) Total coliform density shall not exceed 1,000 per 100 mL;

(2) Fecal coliform density shall not exceed 200 per 100 mL; and

(3) Enterococcus density shall not exceed 35 per 100 mL.

(b) Single Sample Maximum:

(1) Total coliform density shall not exceed 10,000 per 100 mL;

(2) Fecal coliform density shall not exceed 400 per 100 mL;

(3) Enterococcus density shall not exceed 104 per 100 mL; and

(4) Total coliform density shall not exceed 1,000 per 100 mL when the fecal coliform to total coliform ratio exceeds 0.1.

ii. Shellfish Harvesting Standards. At all areas where shellfish may be harvested for human consumption, as determined by the Regional Water Board, the following bacterial objectives shall be maintained throughout the water column:

(a) The median total coliform density shall not exceed 70 per 100 mL, and not more than 10 percent of the samples shall exceed 230 per 100 mL.

iii. Physical Characteristics

(a) Floating particulates and oil and grease shall not be visible.

(b) The discharge of waste shall not cause aesthetically undesirable discoloration of the ocean surface.

(c) Natural light shall not be significantly reduced at any point outside the initial dilution zone as the result of the discharge of waste.

DRAFT

(d) The rate of deposition of inert solids and the characteristics of inert solids in ocean sediments shall not be changed such that benthic communities are degraded.

iv. Chemical Characteristics

(a) The dissolved oxygen concentration shall not at any time be depressed more than 10 percent from that which occurs naturally, as the result of the discharge of oxygen demanding waste materials.

(b) The pH shall not be changed at any time more than 0.2 units from that which occurs naturally.

(c) The dissolved sulfide concentration of waters in and near sediments shall not be significantly increased above that present under natural conditions.

(d) The concentration of substances set forth in Chapter II, Table 1 of the Ocean Plan shall not be increased in marine sediments to levels which would degrade indigenous biota.

(e) The concentration of organic materials in marine sediments shall not be increased to levels that would degrade marine life.

(f) Nutrient materials shall not cause objectionable aquatic growths or degrade indigenous biota.

(g) Discharges shall not cause exceedances of water quality objectives for ocean waters of the state established in Chapter II, Table 1 of the Ocean Plan.

(h) Discharge of radioactive waste shall not degrade marine life.

v. Biological Characteristics

(a) Marine communities, including vertebrate, invertebrate and plant species, shall not be degraded.

(b) The natural taste, odor, and color of fish, shellfish, or other marine resources used for human consumption shall not be altered.

(c) The concentration of organic materials in fish, shellfish, or other marine resources used for human consumption shall not bioaccumulate to levels that are harmful to human health.

vi. General Standards

(a) The discharge shall not cause a violation of any applicable water quality standard for the receiving waters adopted by the Regional Water Board or the State Water Board as required by the CWA and regulations adopted thereunder.

(b) Waste management systems that discharge to the ocean must be designed and operated in a manner that will maintain the indigenous marine life and a healthy and diverse marine community.

(c) Waste discharged to the ocean must be essentially free of:

(1) Material that is floatable or will become floatable upon discharge.

(2) Settleable material or substances that may form sediments which will degrade benthic communities or other aquatic life.

DRAFT

(3) Substances which will accumulate to toxic levels in marine waters, sediments or biota.

(4) Substances that significantly decrease the natural light to benthic communities and other marine life.

(5) Materials that result in aesthetically undesirable discoloration of the ocean surface.

(d) Waste effluents shall be discharged in a manner which provides sufficient initial dilution to minimize the concentrations of substances not removed in the treatment.

(e) Location of waste discharges must be determined after a detailed assessment of the oceanographic characteristics and current patterns to assure that:

(1) Pathogenic organisms and viruses are not present in areas where shellfish are harvested for human consumption or in areas used for swimming or other body-contact sports.

(2) Natural water quality conditions are not altered in areas designated as being of special biological significance or areas that existing marine laboratories use as a source of seawater.

(3) Maximum protection is provided to the marine environment.

(4) The discharge does not adversely affect recreational beneficial uses such as surfing and beach walking.

B. Groundwater Limitations

1. The collection, treatment, storage, and disposal of wastewater or use of recycled water shall not cause a statistically significant degradation of groundwater quality unless a technical evaluation is performed that demonstrates that any degradation that could reasonably be expected to occur, after implementation of all regulatory requirements (e.g., title 27 of the CCR) and reasonable BMPs, will not violate groundwater quality objectives or cause impacts to beneficial uses of groundwater.

2. The collection, treatment, storage, and disposal of wastewater or use of recycled water shall not cause alterations of groundwater that contain chemical concentrations in excess of limits specified in title 22, division 4, chapter 15, article 4, sections 64435 (Tables 2 and 3) and 64444, and the Basin Plan.

3. The collection, treatment, storage, and disposal of wastewater or use of recycled water shall not cause groundwater to contain radionuclides in excess of the limits specified in title 22, division 4, chapter 15, article 5, section 64443 of the CCR.

4. The collection, treatment, storage, and disposal of wastewater or use of recycled water shall not cause groundwater to contain taste - or odor-producing substances in concentrations that cause nuisance or adversely affect beneficial uses.

5. In groundwaters used for domestic or municipal supply (MUN), the collection, treatment, storage, and disposal of wastewater or use of recycled water shall not cause the median of the most probable number of coliform organisms over any 7-day period to exceed 1.1 MPN/100 mL or 1 colony/100 mL.

DRAFT

VI. PROVISIONS

A. Standard Provisions

1. **Federal Standard Provisions.** The Permittee shall comply with all Standard Provisions included in Attachment D of this Order.

2. **Regional Water Board Standard Provisions.** The Permittee shall comply with the following Regional Water Board standard provisions. In the event that there is any conflict, duplication, or overlap between provisions specified by this Order, the more stringent provision shall apply:

   a. Failure to comply with provisions or requirements of this Order, or violation of other applicable laws or regulations governing discharges from this facility, may subject the Permittee to administrative or civil liabilities, criminal penalties, and/or other enforcement remedies to ensure compliance. Additionally, certain violations may subject the Permittee to civil or criminal enforcement from appropriate local, state, or federal law enforcement entities.

   b. In the event the Permittee does not comply or will be unable to comply for any reason, with any prohibition, final effluent limitation, recycling specification, other specification, receiving water limitation, or provision of this Order that may result in a significant threat to human health or the environment, such as inundation of treatment components, breach of pond containment, recycled water main break or equivalent release, irrigation runoff, etc., that results in a discharge to a drainage channel or a surface water, the Permittee shall notify Regional Water Board staff within 24 hours of having knowledge of such non-compliance. Spill notification and reporting shall be conducted in accordance with Section V.E of Attachment D and X.E of the Monitoring and Reporting Program.

B. Monitoring and Reporting Program (MRP) Requirements

The Permittee shall comply with the MRP, included as Attachment E of this Order, and future revisions thereto.

C. Special Provisions

1. **Reopener Provisions**

   a. **Standard Revisions.** If applicable water quality standards are promulgated or approved pursuant to Section 303 of the CWA, or amendments thereto, the Regional Water Board may reopen this Order and make modifications in accordance with such revised standards.

   b. **Reasonable Potential.** This Order may be reopened for modification to include an effluent limitation, if monitoring establishes that the discharge causes, or has the reasonable potential to cause or contribute to, an excursion above a water quality criterion or objective applicable to the receiving water.

   c. **Whole Effluent Toxicity.** As a result of a Toxicity Reduction Evaluation (TRE), this Order may be reopened to include a new chronic toxicity limitation, acute toxicity limitation and/or a limitation for a specific toxicant identified in the TRE.

   d. **303(d)-Listed Pollutants.** If an applicable total maximum daily load (TMDL) (see Fact Sheet, section III.D) program is adopted, this Order may be reopened and effluent limitations for the pollutant(s) that are the subject of the TMDL modified or imposed to conform this Order to the TMDL requirements.

DRAFT

e. **Zone of Initial Dilution/Mixing Zone.** This Order requires the Permittee to conduct an Effluent Discharge Evaluation. If the evaluation results in a revised minimum initial dilution, this Order may be revised to modify effluent limitations that are calculated with the dilution ratio.

2. **Special Studies, Technical Reports and Additional Monitoring Requirements**

a. **Effluent Discharge Evaluation.** The Permittee shall complete an Effluent Discharge Evaluation to establish the appropriate dilution ratio and to demonstrate that the Permittee's discharge meets all requirements of the California Ocean Plan regarding establishment of the Zone of Initial Dilution (and associated dilution ratio), and that the effluent discharge does not impact aquatic life and recreational beneficial uses in the vicinity of the outfall.

By **October 1, 2017**, the Permittee shall submit for Regional Water Board Executive Officer approval, a Work Plan for conducting the effluent discharge evaluation. The Work Plan shall identify specific tasks to be completed and a schedule for completing each task. The Permittee shall implement the Work Plan per the approved schedule.

The effluent discharge evaluation may be conducted in phases. At a minimum the first phase shall include: a review of existing studies (i.e., 1999 Mixing Zone Study, 1982 Dye Study, etc.) and monitoring data to determine if sufficient data is available to determine an appropriate basis for the dilution ratio. If this review does not establish a defensible basis for the dilution ratio, the Permittee shall further conduct a mixing zone study and/or additional monitoring and evaluation to establish a defensible dilution ratio in accordance with requirements of the California Ocean Plan.

The Permittee shall submit a final discharge evaluation report, for review and approval by the Regional Water Board Executive Officer, summarizing findings and recommendation(s) for a defensible dilution ration and for modifying the outfall or adding other discharge options, if necessary, to achieve compliance with all requirements of the Ocean Plan and this Order. The final report shall include a schedule of implementation for the recommended action(s). The final report shall be identified as a specific task in the Work Plan to be submitted on October 1, 2017.

b. **Source Control and Pretreatment Studies**

i. **Local Limits Evaluation.** In accordance with 40 C.F.R. section 122.44(j)(2)(ii), the Permittee shall provide a written technical evaluation of the need to revise local limits under 40 C.F.R. section 403.5(c)(1) within 180 days of issuance or reissuance of the NPDES permit. The written evaluation report shall be submitted by **August 1, 2017.**

ii. **Updated Sewer Use Ordinance.** The Permittee shall perform a review of the existing sewer use ordinance to ensure the Permittee has the necessary legal authorities to monitor and enforce source control standards, restrict discharges of toxic materials to the collection system and inspect facilities connected to the system. In conducting the review, the Permittee may consult the January 2007 EPA Model Pretreatment Ordinance (EPA 833-B-06-002). The Permittee shall submit a report documenting the results of the review and recommended revisions to the sewer use ordinance, if applicable, to the Regional Water Board by **July 1, 2019.** If the report recommends revisions to the sewer use ordinance, the Permittee shall update the sewer use ordinance accordingly by **July 1, 2021**.

c. **Climate Change Readiness Study Plan.** Extreme weather events, sea level rise, shifting precipitation patterns and temperature variability, all intensified by climate

DRAFT

change, have significant implications for wastewater treatment and operations. In order to ensure that Facility operations are not disrupted, compliance with conditions of this Order are achieved, and receiving waters are not adversely impacted by permitted and unpermitted discharges, a Climate Change Readiness Study Plan shall be submitted to the Regional Water Board by **April 1, 2021** for Executive Officer review.

The Permittee shall (1) conduct an assessment of the wastewater treatment facility, operations, collection and discharge systems to determine areas of short and long term vulnerabilities related to climate change, (2) identify control measures needed to protect, improve, and maintain wastewater infrastructure, waste discharge compliance, and receiving water quality under changing climate conditions, and (3) develop a schedule to implement necessary control measures. Control measures shall include, but are not limited to, emergency procedures, contingency plans, alarm/notification systems, training, backup power and equipment, and the need for planned mitigations to ameliorate climate-induced impacts such as changing influent and receiving water quality and conditions, as well as the impact of rising sea level, storm surges and back-to-back severe storms that are expected to become more frequent.

3. Best Management Practices and Pollution Prevention

a. Pollutant Minimization Program (PMP)

i. The Permittee shall, as required by the Executive Officer, develop and conduct a PMP as further described below when there is evidence (e.g., sample results reported as detected, but not quantified (DNQ) when the effluent limitation is less than the method detection limit (MDL), sample results from analytical methods more sensitive than those methods required by this Order, presence of whole effluent toxicity, health advisories for fish consumption, results of benthic or aquatic organism tissue sampling) that a priority pollutant is present in the effluent above an effluent limitation and either:

(a) The concentration of the pollutant is reported as DNQ and the effluent limitation is less than the reporting level (RL); and

(b) A sample result is reported as non-detect (ND) and the effluent limitation is less than the MDL, using definitions described in Attachment A and reporting protocols described in MRP section X.B.4.

ii. The PMP shall include, but not be limited to, the following actions and submittals acceptable to the Regional Water Board:

(a) An annual review and semi-annual monitoring of potential sources of the reportable priority pollutant(s), which may include fish tissue monitoring and other bio-uptake sampling;

(b) Quarterly monitoring for the reportable priority pollutant(s) in the influent to the wastewater treatment system;

(c) Submittal of a control strategy designed to proceed toward the goal of maintaining concentrations of the reportable priority pollutant(s) in the effluent at or below the effluent limitation;

(d) Implementation of appropriate cost-effective control measures for the reportable priority pollutant(s), consistent with the control strategy; and

(e) An annual status report that shall be submitted as part of the Annual Facility Report due **March 1** to the Regional Water Board and shall include:

DRAFT

(1) All PMP monitoring results for the previous year;

(2) A list of potential sources of the reportable pollutant(s);

(3) A summary of all actions undertaken pursuant to the control strategy; and

(4) A description of actions to be taken in the following year.

4. Construction, Operation and Maintenance Specifications

a. This Order (Attachment D, Standard Provision I.D) requires that the Permittee at all times properly operate and maintain all facilities and systems of treatment and control (and related appurtenances) that are installed or used by the Permittee to achieve compliance with this Order. Proper operation and maintenance includes adequate laboratory quality control and appropriate quality assurance procedures.

b. The Permittee shall maintain an updated Operation and Maintenance (O&M) Manual for the operational components of the Facility. The Permittee shall update the O&M Manual, as necessary, to conform to changes in operation and maintenance of the Facility. The Permittee shall operate and maintain the Facility in accordance with the most recently updated O&M Manual. The O&M Manual shall be readily available to operating personnel onsite and for review by state or federal inspectors. The O&M Manual shall include the following.

i. Description of the Facility's organizational structure showing the number of employees, duties and qualifications and plant attendance schedules (daily, weekends and holidays, part-time, etc.). The description should include documentation that the personnel are knowledgeable and qualified to operate the Facility so as to achieve the required level of treatment at all times.

ii. Detailed description of safe and effective operation and maintenance of treatment processes, process control instrumentation and equipment.

iii. Description of laboratory and quality assurance procedures.

iv. Inspection and essential maintenance schedules for all processes and equipment.

v. Description of safeguards to assure that, should there be reduction, loss, or failure of electric power, the Permittee will be able to comply with requirements of this Order.

vi. Description of preventive (fail-safe) and contingency (response and cleanup) plans for controlling accidental discharges, and for minimizing the effect of such events. These plans shall identify the possible sources (such as loading and storage areas, power outage, waste treatment unit failure, process equipment failure, tank and piping failure) of accidental discharges, untreated or partially treated waste bypass, and polluted drainage.

DRAFT

c. Septage Handling Requirements

i. Septage Management Plan. Prior to accepting septage, the Permittee shall submit a Septage Management Plan for approval by the Regional Water Board Executive Officer. The Septage Management Plan shall include a description of the proposed septage receiving station and how septage would be handled, identify the necessary legal authorities to monitor and enforce septage handling requirements, specify standard operating procedures (SOPs) for accepting septage, and demonstrate that the Facility has the capability of handling the septage without violating any conditions of this Order.

ii. Septage Handling Specifications. The Permittee may accept septage upon written notification of approval of the Septage Management Plan by the Regional Water Board Executive Officer. The Permittee shall comply with the following specifications for accepting septage:

(a) The Permittee shall implement any necessary legal authorities to monitor and enforce septage handling requirements, including restriction of discharges of toxic materials to the collection system and wastewater treatment facility and inspection facilities connected to the system.

(b) The Permittee shall maintain a waste hauler manifest that identifies the name of the hauler, county identification number, the date and time the waste load was transferred, and the volume and source of the waste.

(c) The Permittee shall accept the discharge of septage only during business hours and when the Permittee's operations staff is on site.

(d) The Permittee shall accept septage only at an approved septage receiving station/location.

(e) The Permittee shall collect representative grab samples of septage loads in accordance with the MRP (Attachment E).

5. Special Provisions for Municipal Facilities (POTWs Only)

a. Wastewater Collection Systems

i. Statewide General WDRs for Sanitary Sewer Systems

The Permittee has coverage under, and is separately subject to, the requirements of State Water Board Order No. 2006-0003-DWQ, Statewide General WDRs for Sanitary Sewer Systems, as amended by Order No. WQ 2013-0058-EXEC. As such, the Permittee provides notification and reporting of SSOs in accordance with the requirements of Order Nos. 2006-0003-DWQ and WQ 2013-0058-EXEC and any revisions thereto for operation of its wastewater collection system.

b. Pretreatment of Industrial Waste

i. The Permittee shall be responsible for the performance of all pretreatment requirements contained in 40 C.F.R. part 403 and shall be subject to enforcement actions, penalties, fines, and other remedies by the U.S. EPA or other appropriate parties as provided in the CWA, as amended (33 USC 1351 et seq.). The Permittee shall implement and enforce its approved Facility Pretreatment Program. The Permittee's approved Facility Pretreatment Program is hereby made an enforceable condition of this Order. U.S. EPA may initiate enforcement action

DRAFT

against an industrial user for noncompliance with applicable standards and requirements as provided in the CWA.

ii. The Permittee shall enforce the requirements promulgated under Sections 307(b), 307(c), 307(d), and 402(d) of the CWA. The Permittee shall cause industrial users subject to Federal Categorical Standards to achieve compliance no later than the date specified in those requirements or, in the case of a new industrial user, upon commencement of the discharge.

iii. The Permittee shall perform the pretreatment functions as required in 40 C.F.R. part 403 including, but not limited to:

(a) Implement the necessary legal authorities as provided in 40 C.F.R. section 403.8(f)(1);

(b) Enforce the pretreatment requirements under 40 C.F.R. sections 403.5 and 403.6;

(c) Implement the programmatic functions as provided in 40 C.F.R. section 403.8(f)(2); and

(d) Provide the requisite funding and personnel to implement the pretreatment program as provided in 40 C.F.R. section 403.8(f)(3).

iv. The Permittee shall implement, as more completely set forth in 40 C.F.R. section 403.5, the necessary legal authorities, programs, and controls to ensure that the following incompatible wastes are not introduced to the treatment system:

(a) Wastes which create a fire or explosion hazard in the treatment works;

(b) Wastes which will cause corrosive structural damage to treatment works, but in no case wastes with a pH lower than 5.0, unless the works is specially designed to accommodate such wastes;

(c) Solid or viscous wastes in amounts which cause obstruction to flow in sewers, or which cause other interference with proper operation of treatment works;

(d) Any waste, including oxygen demanding pollutants (BOD_5, etc.), released in such volume or strength as to cause inhibition or disruption in the treatment works, and subsequent treatment process upset and loss of treatment efficiency;

(e) Heat in amounts that inhibit or disrupt biological activity in the treatment works, or that raise influent temperatures above 40°C (104°F);

(f) Petroleum oil, non-biodegradable cutting oil, or products of mineral oil origin in amounts that will cause interference or pass through;

(g) Pollutants which result in the presence of toxic gases, vapors, or fumes within the treatment works in a quantity that may cause acute worker health and safety problems; and

(h) Any trucked or hauled pollutants, except at points predesignated by the Permittee, and consisting of waste that can be adequately treated at the Facility.

v. The Permittee shall implement, as more completely set forth in 40 C.F.R. section 403.5, the legal authorities, programs, and controls necessary to ensure

DRAFT

that indirect discharges do not introduce pollutants into the sewerage system that, either alone or in conjunction with a discharge or discharges from other sources:

(a) Flow through the system to the receiving water in quantities or concentrations that cause a violation of this Order, or

(b) Inhibit or disrupt treatment processes, treatment system operations, or sludge processes, use, or disposal and either cause a violation of this Order or prevent sludge use or disposal in accordance with this Order.

c. Sludge Disposal and Handling Requirements

i. Sludge, as used in this Order, means the solid, semisolid, and liquid residues removed during primary, secondary, or advanced wastewater treatment processes. Solid waste refers to grit and screenings generated during preliminary treatment. Biosolids refers to sludge that has been treated, tested, and demonstrated to be capable of being beneficially and legally used pursuant to federal and state regulations as a soil amendment for agriculture, silviculture, horticulture, and land reclamation activities.

ii. All collected sludge and other solid waste removed from liquid wastes shall be removed from screens, sumps, ponds, and tanks as needed to ensure optimal plant operation and disposed of in accordance with applicable federal and state regulations.

iii. The use and disposal of biosolids shall comply with all of the land application and disposal requirements in 40 C.F.R. part 503, which are enforceable by the U.S. EPA, not the Regional Water Board. If during the life of this Order, the state accepts primacy for implementation of 40 C.F.R. part 503, the Regional Water Board may also initiate enforcement where appropriate.

iv. Sludge or biosolids that are disposed of in a municipal solid waste landfill or used as daily landfill cover shall meet the applicable requirements of 40 C.F.R. part 258. In the annual self-monitoring report, the Permittee shall report the amount of sludge placed in a landfill and the landfill(s) which received the sludge or biosolids.

v. The Permittee shall take all reasonable steps to prevent and minimize any sludge use or disposal in violation of this Order that may adversely affect human health or the environment.

vi. Solids and sludge treatment, storage, and disposal or reuse shall not create a nuisance, such as objectionable odors or flies, and shall not result in groundwater contamination.

vii. Solids and sludge treatment and storage sites shall have facilities adequate to divert surface water runoff from adjacent areas, to protect the boundaries of the site from erosion, and to prevent drainage from the treatment and storage site. Adequate protection is defined as protection from a design storm with a 100-year recurrence interval and 24-hour duration.

viii. The discharge of sewage sludge and solids shall not cause waste material to be in a position where it is, or can be, conveyed from the treatment and storage sites and deposited in the waters of the state.

DRAFT

ix. For the land application of biosolids as soil amendment, the Permittee shall submit a report of waste discharge or the Permittee may dispose of biosolids at another appropriately permitted facility.

x. New sludge treatment and storage facilities must comply with the requirements of the title 27 of the CCR for the protection of water quality.

d. Operator Certification

Supervisors and operators of municipal wastewater treatment facilities shall possess a certificate of appropriate grade in accordance with CCR title 23 of the CCR, section 3680. The State Water Board may accept experience in lieu of qualification training. In lieu of a properly certified wastewater treatment facility operator, the State Water Board may approve use of a water treatment facility operator of appropriate grade certified by DDW where water recycling is involved.

e. Adequate Capacity

If the Facility will reach capacity within 4 years, the Permittee shall notify the Regional Water Board. A copy of such notification shall be sent to appropriate local elected officials, local permitting agencies, and the press. Factors to be evaluated in assessing reserve capacity shall include, at a minimum, (1) comparison of the wet weather design flow with the highest daily flow, and (2) comparison of the average dry weather design flow with the lowest 30-day flow. The Permittee shall demonstrate that adequate steps are being taken to address the capacity problem. The Permittee shall submit a technical report to the Regional Water Board showing how flow volumes will be prevented from exceeding capacity, or how capacity will be increased, **within 120 days after providing notification to the Regional Water Board**, or within 120 days after receipt of Regional Water Board notification that the Facility will reach capacity within 4 years. The time for filing the required technical report may be extended by the Regional Water Board. An extension of 30 days may be granted by the Executive Officer, and longer extensions may be granted by the Regional Water Board itself. [CCR title 23, section 2232].

6. Other Special Provisions

a. Storm Water

For the control of storm water discharges from the Facility, if required, the Permittee shall seek separate authorization to discharge under the requirements of the State Water Board's Water Quality Order No. 2014-0057-DWQ, NPDES General Permit No. CAS000001, General Permit for Storm Water Discharges Associated with Industrial Activities (or subsequent renewed versions of the NPDES General Permit CAS000001), which is not incorporated by reference in this Order.

BMPs to control the run-on of storm water to the Facility site shall be maintained and upgraded as necessary. The Permittee shall describe the effectiveness of these storm water BMPs, as well as activities to maintain and upgrade these BMPs during the previous year, in its annual report to the Regional Water Board.

7. Compliance Schedules – Not Applicable

This Order does not establish interim effluent limitations or schedules of compliance for final numeric effluent limitations.

DRAFT

VII. COMPLIANCE DETERMINATION

Compliance with the effluent limitations contained in section IV of this Order will be determined as specified below.

A. Compliance with Effluent Limitations

1. **Single Constituent Effluent Limitations.** The Permittee is out of compliance with the effluent limitation if the concentration of the pollutant (see section VII.C) in the monitoring sample is greater than the effluent limitation and greater than or equal to the reported Minimum Level (ML).

2. **Effluent Limitations Expressed as a Sum of Several Constituents.** The Permittee is out of compliance with an effluent limitation which applies to the sum of a group of chemicals (e.g., PCBs) if the sum of the individual pollutant concentrations is greater than the effluent limitation. Individual pollutants of the group will be considered to have a concentration of zero if the constituent is reported as non-detect (ND) or detected but not quantified (DNQ).

B. Multiple Sample Data

When determining compliance with an AMEL for priority pollutants, and more than one sample result is available, the Permittee shall compute the arithmetic mean unless the data set contains one or more reported determinations of "Detected, but Not Quantified" (DNQ) or "Not Detected" (ND). In those cases, the Permittee shall compute the median in place of the arithmetic mean in accordance with the following procedure.

1. The data set shall be ranked from low to high, ranking the reported ND determinations lowest, DNQ determinations next, followed by quantified values (if any). The order of the individual ND or DNQ determinations is unimportant.

2. The median value of the data set shall be determined. If the data set has an odd number of data points, then the median is the middle value. If the data set has an even number of data points, then the median is the average of the two middle values unless one or both of the points are ND or DNQ, in which case the median value shall be the lower of the two data points where DNQ is lower than a value and ND is lower than DNQ and a value of zero shall be used for the ND or DNQ value in the median calculation for compliance purposes only. Using a value of zero for DNQ or ND samples does not apply when performing reasonable potential or antidegradation analyses.

C. Average Monthly Effluent Limitation (AMEL)

If the average (or when applicable, the median determined by subsection C above for multiple sample data) of daily discharges over a calendar month exceeds the AMEL for a given parameter, this will represent a single violation, though the Permittee will be considered out of compliance for each day of that month for that parameter (e.g., resulting in 31 days of non-compliance in a 31-day month). If only a single sample is taken during the calendar month and the analytical result for that sample exceeds the AMEL, the Permittee will be considered out of compliance for that calendar month. The Permittee will only be considered out of compliance for days when the discharge occurs. If there are ND or DNQ results for a specific constituent in a calendar month, the Permittee shall calculate the median of all sample results within that month for compliance determination with the AMEL as described in section X.B, above.

D. Average Weekly Effluent Limitation (AWEL)

If the average (or when applicable, the median determined by subsection C above for multiple sample data) of daily discharges over a calendar week (Sunday through Saturday) exceeds the AWEL for a given parameter, this will represent a single violation, though the Permittee will be

DRAFT

considered out of compliance for each day of that week for that parameter, resulting in 7 days of non-compliance. If only a single sample is taken during the calendar week and the analytical result for that sample exceeds the AWEL, the Permittee will be considered out of compliance for that calendar week. The Permittee will only be considered out of compliance for days when the discharge occurs. If there are ND or DNQ results for a specific constituent in a calendar week, the Permittee shall calculate the median of all sample results within that week for compliance determination with the AWEL as described in section X.B, above.

E. Maximum Daily Effluent Limitation (MDEL)

If a daily discharge (or when applicable, the median determined by subsection C, above, for multiple sample data of a daily discharge) exceeds the MDEL for a given parameter, the Permittee will be considered out of compliance for that parameter for that 1 day only within the reporting period.

F. Instantaneous Minimum Effluent Limitation

If the analytical result of a single grab sample is lower than the instantaneous minimum effluent limitation for a parameter, the Permittee will be considered out of compliance for that parameter for that single sample. Non-compliance for each sample will be considered separately (e.g., the results of two grab samples taken within a calendar day that both are lower than the instantaneous minimum effluent limitation would result in two instances of non-compliance with the instantaneous minimum effluent limitation).

If the Permittee monitors pH continuously, pursuant to 40 C.F.R. section 401.17, the Permittee shall be in compliance with the pH limitation specified herein provided that both of the following conditions are satisfied: (1) the total sum of time during which the pH values are outside the required range of pH values shall not exceed 7 hours and 26 minutes in any calendar month; and (2) no individual excursion from the range of pH values shall exceed 60 minutes.

G. Instantaneous Maximum Effluent Limitation

If the analytical result of a single grab sample is higher than the instantaneous maximum effluent limitation for a parameter, the Permittee will be considered out of compliance for that parameter for that single sample. Non-compliance for each sample will be considered separately (e.g., the results of two grab samples taken within a calendar day that both exceed the instantaneous maximum effluent limitation would result in two instances of non-compliance with the instantaneous maximum effluent limitation).

If the Permittee monitors pH continuously, pursuant to 40 C.F.R. section 401.17, the Permittee shall be in compliance with the pH limitation specified herein provided that both of the following conditions are satisfied: (1) the total sum of time during which the pH values are outside the required range of pH values shall not exceed 7 hours and 26 minutes in any calendar month; and (2) no individual excursion from the range of pH values shall exceed 60 minutes.

H. Bacteriological Limitations (Total Coliform)

Median. The median is the central tendency concentration of the pollutant. The data set shall be ranked from low to high, ranking the ND concentrations lowest, followed by quantified values. The median value is determined based on the number of data points in the set. If the data set has an odd number of data points, then the median is the middle value. If the data set has an even number of data points, the median is the average of the two middle values, unless one or both points are ND or DNQ, in which case the median value shall be the lower of the two middle data points. DNQ is lower than a detected value, and ND is lower than DNQ.

DRAFT

I. Chronic Toxicity

Compliance with the accelerated monitoring and TRE provisions shall constitute compliance with the chronic toxicity requirements, all specified in the MRP (Attachment E, sections V.A and V.B).

J. Average Dry Weather Flow

Compliance with the average dry weather flow prohibition in section III.H of this Order will be determined once each calendar year by evaluating all flow data collected in a calendar year. The flow through the facility, measured daily and averaged monthly, must be 1.86 mgd or less for the month with the lowest average monthly flow.

K. Peak Daily Wet Weather Flow

The peak daily wet weather flow is the maximum flow rate that occurs over a 24-hour period. Compliance with the peak daily wet weather flow prohibition in section III.H of this Order will be determined daily by measuring the daily average flow at Monitoring Location INF-001. If the measured daily average flow exceeds 6.12 mgd, the discharge is not in compliance with Prohibition III.H of this Order.

DRAFT

ATTACHMENT A – DEFINITIONS

Areas of Special Biological Significance (ASBS)
Those areas designated by the State Water Resources Control Board (State Water Board) as ocean areas requiring protection of species or biological communities to the extent that alteration of natural water quality is undesirable. All Areas of Special Biological Significance are also classified as a subset of STATE WATER QUALITY PROTECTION AREAS.

Arithmetic Mean (μ)
Also called the average is the sum of measured values divided by the number of samples. For ambient water concentrations, the arithmetic mean is calculated as follows:

Arithmetic mean = $\mu = \Sigma x / n$ where: Σx is the sum of the measured ambient water concentrations, and n is the number of samples.

Average Monthly Effluent Limitation (AMEL)
The highest allowable average of daily discharges over a calendar month, calculated as the sum of all daily discharges measured during a calendar month divided by the number of daily discharges measured during that month.

Average Weekly Effluent Limitation (AWEL)
The highest allowable average of daily discharges over a calendar week (Sunday through Saturday), calculated as the sum of all daily discharges measured during a calendar week divided by the number of daily discharges measured during that week.

Bioaccumulative Pollutants
Substances taken up by an organism from its surrounding medium through gill membranes, epithelial tissue, or from food and subsequently concentrated and retained in the body of the organism.

Chlordane
Shall mean the sum of chlordane-alpha, chlordane-gamma, chlordene-alpha, chlordene-gamma, nonachlor-alpha, nonachlor-gamma, and oxychlordane

Chronic Toxicity
Chronic toxicity measure the acceptability of waters for supporting a healthy marine biota until improved methods are developed to evaluate biological response. See also Test of Significant Toxicity.

Daily Discharge
Daily Discharge is defined as either: (1) the total mass of the constituent discharged over the calendar day (12:00 am through 11:59 pm) or any 24-hour period that reasonably represents a calendar day for purposes of sampling (as specified in the permit), for a constituent with limitations expressed in units of mass or; (2) the unweighted arithmetic mean measurement of the constituent over the day for a constituent with limitations expressed in other units of measurement (e.g., concentration).

The daily discharge may be determined by the analytical results of a composite sample taken over the course of one day (a calendar day or other 24-hour period defined as a day) or by the arithmetic mean of analytical results from one or more grab samples taken over the course of the day.

DRAFT

For composite sampling, if 1 day is defined as a 24-hour period other than a calendar day, the analytical result for the 24-hour period will be considered as the result for the calendar day in which the 24-hour period ends.

DDT
Shall mean the sum of 4,4'DDT, 2,4'DDT, 4,4'DDE, 2,4'DDE, 4,4'DDD, and 2,4'DDD.

Degrade
Degradation shall be determined by comparison of the waste field and reference site(s) for characteristic species diversity, population density, contamination, growth anomalies, debility, or supplanting of normal species by undesirable plant and animal species. Degradation occurs if there are significant differences in any of three major biotic groups, namely, demersal fish, benthic invertebrates, or attached algae. Other groups may be evaluated where benthic species are not affected, or are not the only ones affected.

Detected, but Not Quantified (DNQ)
Sample results that are less than the reported Minimum Level, but greater than or equal to the laboratory's MDL. Sample results reported as DNQ are estimated concentrations.

Dichlorobenzenes
Shall mean the sum of 1,2- and 1,3-dichlorobenzene.

Dilution Credit
The amount of dilution granted to a discharge in the calculation of a water quality-based effluent limitation, based on the allowance of a specified mixing zone. It is calculated from the dilution ratio or determined through conducting a mixing zone study or modeling of the discharge and receiving water.

Downstream Ocean Waters
Waters downstream with respect to ocean currents.

Dredged Material
Any material excavated or dredged from the navigable waters of the United States, including material otherwise referred to as "spoil."

Enclosed Bays
Indentations along the coast that enclose an area of oceanic water within distinct headlands or harbor works. Enclosed bays include all bays where the narrowest distance between headlands or outermost harbor works is less than 75 percent of the greatest dimension of the enclosed portion of the bay. This definition includes but is not limited to: Humboldt Bay, Bodega Harbor, Tomales Bay, Drakes Estero, San Francisco Bay, Morro Bay, Los Angeles Harbor, Upper and Lower Newport Bay, Mission Bay, and San Diego Bay.

Endosulfan
The sum of endosulfan-alpha and -beta and endosulfan sulfate.

Estimated Chemical Concentrations
The estimated chemical concentration that results from the confirmed detection of the substance by the analytical method below the ML value.

Halomethanes
The sum of bromoform, bromomethane (methyl bromide) and chloromethane (methyl chloride).

HCH

DRAFT

The sum of the alpha, beta, gamma (lindane) and delta isomers of hexachlorocyclohexane.

Initial Dilution
The process that results in the rapid and irreversible turbulent mixing of wastewater with ocean water around the point of discharge.

For a submerged buoyant discharge, characteristic of most municipal and industrial wastes that are released from the submarine outfalls, the momentum of the discharge and its initial buoyancy act together to produce turbulent mixing. Initial dilution in this case is completed when the diluting wastewater ceases to rise in the water column and first begins to spread horizontally.

For shallow water submerged discharges, surface discharges, and non-buoyant discharges, characteristic of cooling water wastes and some individual discharges, turbulent mixing results primarily from the momentum of discharge. Initial dilution, in these cases, is considered to be completed when the momentum induced velocity of the discharge ceases to produce significant mixing of the waste, or the diluting plume reaches a fixed distance from the discharge to be specified by the Regional Water Board, whichever results in the lower estimate for initial dilution.

Inland Surface Waters
All surface waters of the state that do not include the ocean, enclosed bays, or estuaries.

Instantaneous Maximum Effluent Limitation
The highest allowable value for any single grab sample or aliquot (i.e., each grab sample or aliquot is independently compared to the instantaneous maximum limitation).

Instantaneous Minimum Effluent Limitation
The lowest allowable value for any single grab sample or aliquot (i.e., each grab sample or aliquot is independently compared to the instantaneous minimum limitation).

Kelp Beds
For purposes of the bacteriological standards of the Ocean Plan, are significant aggregations of marine algae of the genera Macrocystis and Nereocystis. Kelp beds include the total foliage canopy of Macrocystis and Nereocystis plants throughout the water column.

Mariculture (Marine Community)
The culture of plants and animals in marine waters independent of any pollution source.

Material
(a) In common usage: (1) the substance or substances of which a thing is made or composed (2) substantial; (b) For purposes of the Ocean Plan relating to waste disposal, dredging and the disposal of dredged material and fill, MATERIAL means matter of any kind or description which is subject to regulation as waste, or any material dredged from the navigable waters of the United States. See also, DREDGED MATERIAL.

Maximum Daily Effluent Limitation (MDEL)
The highest allowable daily discharge of a pollutant, over a calendar day (or 24-hour period). For pollutants with limitations expressed in units of mass, the daily discharge is calculated as the total mass of the pollutant discharged over the day. For pollutants with limitations expressed in other units of measurement, the daily discharge is calculated as the arithmetic mean measurement of the pollutant over the day.

DRAFT

Median
The middle measurement in a set of data. The median of a set of data is found by first arranging the measurements in order of magnitude (either increasing or decreasing order). If the number of measurements (n) is odd, then the median = $X_{(n+1)/2}$. If n is even, then the median = $(X_{n/2} + X_{(n/2)+1})/2$ (i.e., the midpoint between the $n/2$ and $n/2+1$).

Method Detection Limit (MDL)
The minimum concentration of a substance that can be measured and reported with 99 percent confidence that the analyte concentration is greater than zero, as defined in 40 C.F.R. part 136, Attachment B, revised as of July 3, 1999.

Minimum Level (ML)
The concentration at which the entire analytical system must give a recognizable signal and acceptable calibration point. The ML is the concentration in a sample that is equivalent to the concentration of the lowest calibration standard analyzed by a specific analytical procedure, assuming that all the method specified sample weights, volumes, and processing steps have been followed.

Mixing Zone
A limited volume of receiving water that is allocated for mixing with a wastewater discharge where water quality criteria can be exceeded without causing adverse effects to the overall water body.

Natural Light
Reduction of natural light may be determined by the Regional Water Board by measurement of light transmissivity or total irradiance, or both, according to the monitoring needs of the Regional Water Board.

Not Detected (ND)
Those sample results less than the laboratory's MDL.

Ocean Waters
The territorial marine waters of the state as defined by California law to the extent these waters are outside of enclosed bays, estuaries, and coastal lagoons. If a discharge outside the territorial waters of the state could affect the quality of the waters of the state, the discharge may be regulated to assure no violation of the Ocean Plan will occur in ocean waters.

PAHs (polynuclear aromatic hydrocarbons)
The sum of acenaphthylene, anthracene, 1,2-benzanthracene, 3,4-benzofluoranthene, benzo[k]fluoranthene, 1,12-benzoperylene, benzo[a]pyrene, chrysene, dibenzo[ah]anthracene, fluorene, indeno[1,2,3-cd]pyrene, phenanthrene and pyrene.

PCBs (polychlorinated biphenyls)
The sum of chlorinated biphenyls whose analytical characteristics resemble those of Aroclor-1016, Aroclor-1221, Aroclor-1232, Aroclor-1242, Aroclor-1248, Aroclor-1254 and Aroclor-1260.

Persistent Pollutants
Substances for which degradation or decomposition in the environment is nonexistent or very slow.

Pollutant Minimization Program (PMP)
PMP means waste minimization and pollution prevention actions that include, but are not limited to, product substitution, waste stream recycling, alternative waste management methods, and education of the public and businesses. The goal of the PMP shall be to reduce all potential sources of Ocean Plan Table 1 pollutants through pollutant minimization (control) strategies, including pollution prevention measures as appropriate, to maintain the effluent concentration at or below the water quality-based effluent limitation.

DRAFT

Pollution prevention measures may be particularly appropriate for persistent bioaccumulative priority pollutants where there is evidence that beneficial uses are being impacted. The Regional Water Board may consider cost effectiveness when establishing the requirements of a PMP. The completion and implementation of a Pollution Prevention Plan, if required pursuant to Water Code section 13263.3(d), shall be considered to fulfill the PMP requirements.

Pollution Prevention
Any action that causes a net reduction in the use or generation of a hazardous substance or other pollutant that is discharged into water and includes, but is not limited to, input change, operational improvement, production process change, and product reformulation (as defined in Water Code section 13263.3). Pollution prevention does not include actions that merely shift a pollutant in wastewater from one environmental medium to another environmental medium, unless clear environmental benefits of such an approach are identified to the satisfaction of the State or Regional Water Board.

Publicly Owned Treatment Works (POTW)
A treatment works as defined in section 212 of the Clean Water Act (CWA), which is owned by a government agency as defined by section 502(4) of the CWA. [Section 502(4) of the CWA defines a municipality as a city, town, borough, county, parish, district, association, or other public body created by or pursuant to State law and having jurisdiction over disposal of sewage, industrial wastes, or other wastes). This definition includes any devices and systems used in the storage, treatment, recycling, and recycling of municipal sewage or industrial wastes of a liquid nature. It also includes sewers, pipes and other conveyances only if they convey wastewater to a POTW Treatment Plant. The term also means the municipality as defined in section 502(4) of the CWA, which has jurisdiction over the Indirect Discharges to and the discharges from such a treatment works.

Recycled Water
Water which, as a result of treatment of municipal wastewater, is suitable for a direct beneficial use or a controlled use that would not otherwise occur and is therefore considered a valuable resource (Water Code section 13050). The terms “recycled water” and “reclaimed water” have the same meaning (Water Code section 26).

Reported Minimum Level
The reported ML (also known as the Reporting Level or RL) is the ML (and its associated analytical method) chosen by the Permittee for reporting and compliance determination from the MLs included in this Order, including an additional factor if applicable as discussed herein. The MLs included in this Order correspond to approved analytical methods for reporting a sample result that are selected by the Regional Water Board either from Appendix II of the Ocean Plan in accordance with section III.C.5.a. of the Ocean Plan or established in accordance with section III.C.5.b. of the Ocean Plan. The ML is based on the proper application of method-based analytical procedures for sample preparation and the absence of any matrix interferences. Other factors may be applied to the ML depending on the specific sample preparation steps employed. For example, the treatment typically applied in cases where there are matrix-effects is to dilute the sample or sample aliquot by a factor of ten. In such cases, this additional factor must be applied to the ML in the computation of the RL.

Satellite Collection System
The portion, if any, of a sanitary sewer system owned or operated by a different public agency than the agency that owns and operates the wastewater treatment facility that a sanitary sewer system is tributary to.

DRAFT

Septage
Defined as the liquid or solid material removed from a septic tank, cesspool, portable toilet, type III marine sanitation device, recreational vehicle's sanitation tank, or similar storage or treatment works that receives domestic waste.

Shellfish
Organisms identified by the California Department of Health Services as shellfish for public health purposes (i.e., mussels, clams and oysters).

Significant Difference
Defined as a statistically significant difference in the means of two distributions of sampling results at the 95 percent confidence level.

Six-Month Median Effluent Limitation
The highest allowable moving median of all daily discharges for any 180-day period.

Standard Deviation (σ)
A measure of variability that is calculated as follows:

$$\sigma = (\sum[(x - \mu)^2]/(n - 1))^{0.5}$$

where:

x is the observed value;

μ is the arithmetic mean of the observed values; and

n is the number of samples.

State Water Quality Protection Areas (SWQPAs)
Non-terrestrial marine or estuarine areas designated to protect marine species or biological communities from an undesirable alteration in natural water quality. All AREAS OF SPECIAL BIOLOGICAL SIGNIFICANCE (ASBS) that were previously designated by the State Water Board in Resolution Nos. 74-28, 74-32, and 75-61 are now also classified as a subset of State Water Quality Protection Areas and require special protections afforded by the Ocean Plan.

TCDD Equivalents
The sum of the concentrations of chlorinated dibenzodioxins (2,3,7,8-CDDs) and chlorinated dibenzofurans (2,3,7,8-CDFs) multiplied by their respective toxicity factors, as shown in the table below.

Isomer Group	Toxicity Equivalence Factor
2,3,7,8-tetra CDD	1.0
2,3,7,8-penta CDD	0.5
2,3,7,8-hexa CDDs	0.1
2,3,7,8-hepta CDD	0.01
octa CDD	0.001
2,3,7,8 tetra CDF	0.1
1,2,3,7,8 penta CDF	0.05
2,3,4,7,8 penta CDF	0.5
2,3,7,8 hexa CDFs	0.1
2,3,7,8 hepta CDFs	0.01
octa CDF	0.001

DRAFT

Test of Significant Toxicity (TST)
The statistical approach described in National Pollutant Discharge Elimination System Test of Significant Toxicity Implementation Document (EPA 833-R10-003, 2010). TST was developed by the U.S. Environmental Protection Agency (EPA) for analyzing WET and ambient toxicity data. Using the TST approach, the sample is declared toxic if there is greater than or equal to a 25% effect in chronic tests, or if there is greater than or equal to a 20% effect in acute tests at the permitted instream waste concentration (IWC) (referred to as the toxic regulatory management decision (RMD)). The sample is declared non-toxic if there is less than or equal to a 10% effect at the IWC in acute or chronic tests (referred to as the non-toxic RMD).

Toxicity Reduction Evaluation (TRE)
A study conducted in a step-wise process designed to identify the causative agents of effluent or ambient toxicity, isolate the sources of toxicity, evaluate the effectiveness of toxicity control options, and then confirm the reduction in toxicity. The first steps of the TRE consist of the collection of data relevant to the toxicity, including additional toxicity testing, and an evaluation of facility operations and maintenance practices, and best management practices. A Toxicity Identification Evaluation (TIE) may be required as part of the TRE, if appropriate. (A TIE is a set of procedures to identify the specific chemical(s) responsible for toxicity. These procedures are performed in three phases (characterization, identification, and confirmation) using aquatic organism toxicity tests.)

Waste
As used in the Ocean Plan, waste includes a discharger's total discharge, of whatever origin, i.e., gross, not net, discharge.

Water Recycling
The treatment of wastewater to render it suitable for reuse, the transportation of treated wastewater to the place of use, and the actual use of treated wastewater for a direct beneficial use or controlled use that would not otherwise occur.

DRAFT

ATTACHMENT B – MAP

Crescent City Wastewater Treatment Facility

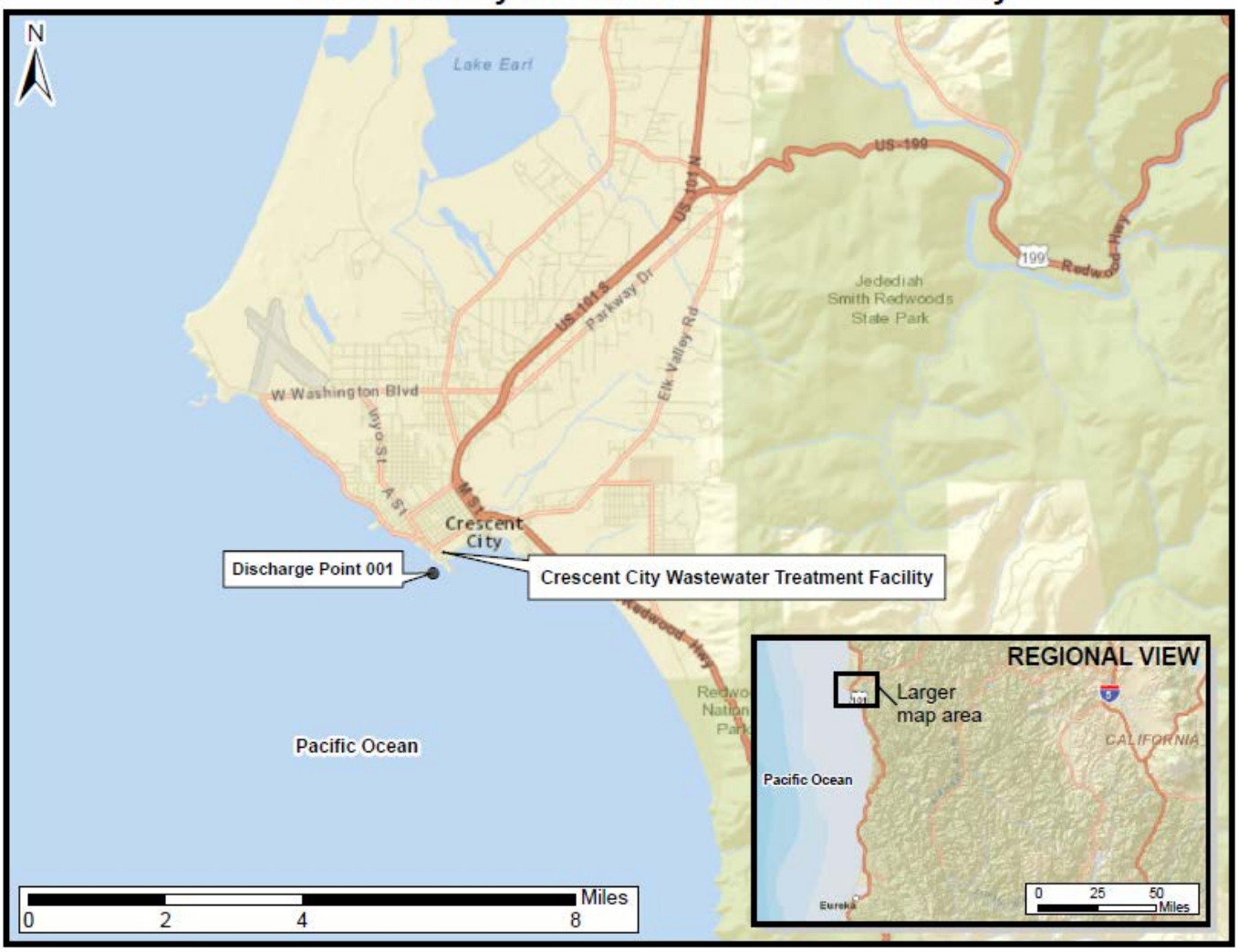

ATTACHMENT C – FLOW SCHEMATIC

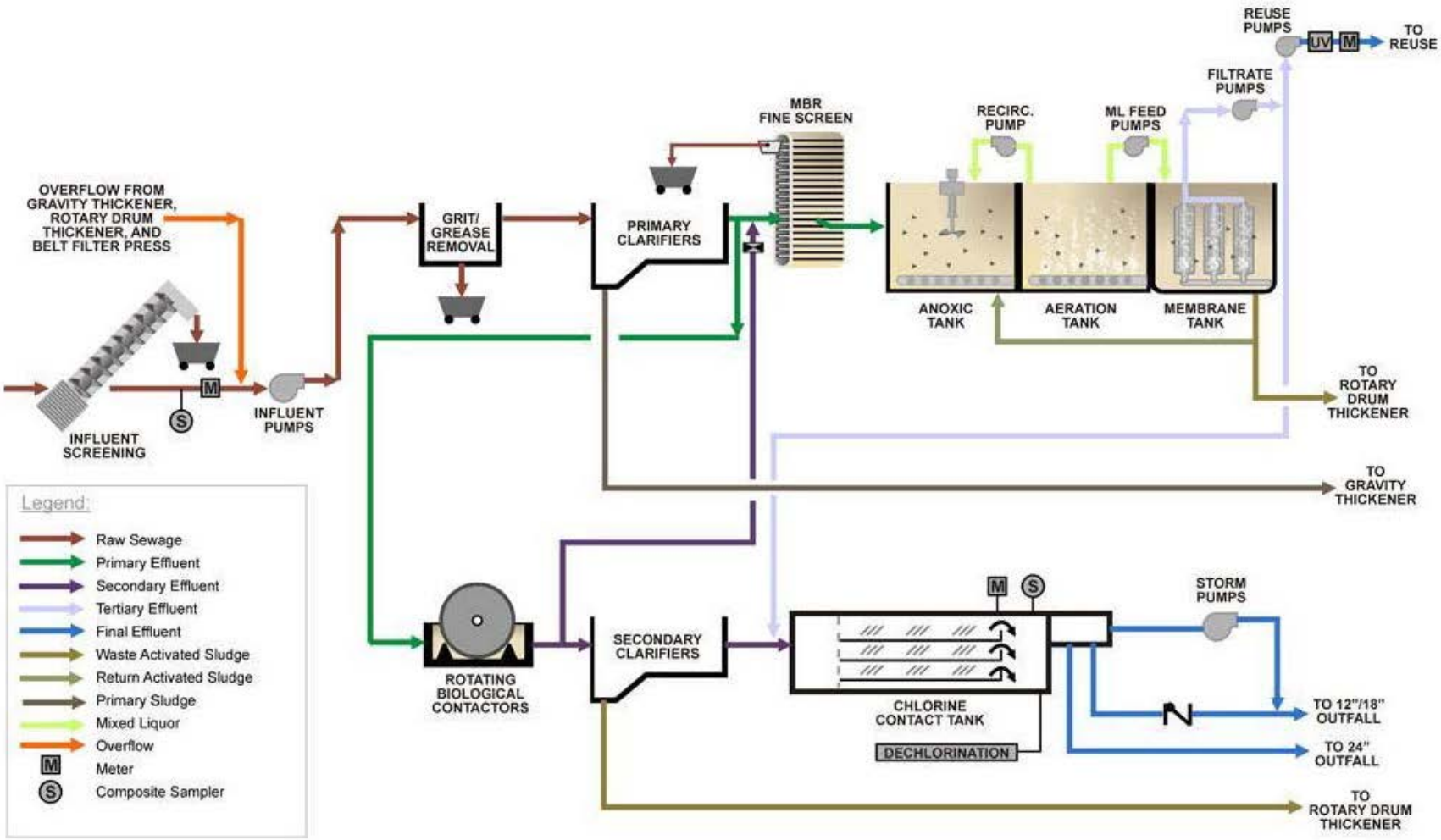

ATTACHMENT D – STANDARD PROVISIONS

I. STANDARD PROVISIONS – PERMIT COMPLIANCE

A. Duty to Comply

1. The Permittee must comply with all of the conditions of this Order. Any noncompliance constitutes a violation of the Clean Water Act (CWA) and the California Water Code and is grounds for enforcement action, for permit termination, revocation and reissuance, or modification; denial of a permit renewal application; or a combination thereof. (40 C.F.R. § 122.41(a); Wat. Code, §§ 13261, 13263, 13265, 13268, 13000, 13001, 13304, 13350, 13385.)

2. The Permittee shall comply with effluent standards or prohibitions established under Section 307(a) of the CWA for toxic pollutants and with standards for sewage sludge use or disposal established under Section 405(d) of the CWA within the time provided in the regulations that establish these standards or prohibitions, even if this Order has not yet been modified to incorporate the requirement. (40 C.F.R. § 122.41(a)(1).)

B. Need to Halt or Reduce Activity Not a Defense

It shall not be a defense for a Permittee in an enforcement action that it would have been necessary to halt or reduce the permitted activity in order to maintain compliance with the conditions of this Order. (40 C.F.R. § 122.41(c).)

C. Duty to Mitigate

The Permittee shall take all reasonable steps to minimize or prevent any discharge or sludge use or disposal in violation of this Order that has a reasonable likelihood of adversely affecting human health or the environment. (40 C.F.R. § 122.41(d).)

D. Proper Operation and Maintenance

The Permittee shall at all times properly operate and maintain all facilities and systems of treatment and control (and related appurtenances) which are installed or used by the Permittee to achieve compliance with the conditions of this Order. Proper operation and maintenance also includes adequate laboratory controls and appropriate quality assurance procedures. This provision requires the operation of backup or auxiliary facilities or similar systems that are installed by a Permittee only when necessary to achieve compliance with the conditions of this Order. (40 C.F.R. § 122.41(e).)

E. Property Rights

1. This Order does not convey any property rights of any sort or any exclusive privileges. (40 C.F.R. § 122.41(g).)

2. The issuance of this Order does not authorize any injury to persons or property or invasion of other private rights, or any infringement of state or local law or regulations. (40 C.F.R. § 122.5(c).)

DRAFT

F. Inspection and Entry

The Permittee shall allow the Regional Water Board, State Water Board, U.S. EPA, and/or their authorized representatives (including an authorized contractor acting as their representative), upon the presentation of credentials and other documents, as may be required by law, to (33 U.S.C. § 1318(a)(4)(b); 40 C.F.R. § 122.41(i); Wat. Code, §§ 13267, 13383):

1. Enter upon the Permittee's premises where a regulated facility or activity is located or conducted, or where records are kept under the conditions of this Order (33 U.S.C. § 1318(a)(4)(b)(i); 40 C.F.R. § 122.41(i)(1); Wat. Code, §§ 13267, 13383);

2. Have access to and copy, at reasonable times, any records that must be kept under the conditions of this Order (33 U.S.C. § 1318(a)(4)(b)(ii); 40 C.F.R. § 122.41(i)(2); Wat. Code, §§ 13267, 13383);

3. Inspect and photograph, at reasonable times, any facilities, equipment (including monitoring and control equipment), practices, or operations regulated or required under this Order (33 U.S.C. § 1318(a)(4)(b)(ii); 40 C.F.R. § 122.41(i)(3); Wat. Code, §§ 13267, 13383); and

4. Sample or monitor, at reasonable times, for the purposes of assuring Order compliance or as otherwise authorized by the CWA or the Water Code, any substances or parameters at any location. (33 U.S.C. § 1318(a)(4)(b); 40 C.F.R. § 122.41(i)(4); Wat. Code, §§ 13267, 13383.)

G. Bypass

1. Definitions

a. "Bypass" means the intentional diversion of waste streams from any portion of a treatment facility. (40 C.F.R. § 122.41(m)(1)(i).)

b. "Severe property damage" means substantial physical damage to property, damage to the treatment facilities, which causes them to become inoperable, or substantial and permanent loss of natural resources that can reasonably be expected to occur in the absence of a bypass. Severe property damage does not mean economic loss caused by delays in production. (40 C.F.R. § 122.41(m)(1)(ii).)

2. Bypass not exceeding limitations. The Permittee may allow any bypass to occur which does not cause exceedances of effluent limitations, but only if it is for essential maintenance to assure efficient operation. These bypasses are not subject to the provisions listed in Standard Provisions – Permit Compliance I.G.3, I.G.4, and I.G.5 below. (40 C.F.R. § 122.41(m)(2).)

3. Prohibition of bypass. Bypass is prohibited, and the Regional Water Board may take enforcement action against a Permittee for bypass, unless (40 C.F.R. § 122.41(m)(4)(i)):

a. Bypass was unavoidable to prevent loss of life, personal injury, or severe property damage (40 C.F.R. § 122.41(m)(4)(i)(A));

b. There were no feasible alternatives to the bypass, such as the use of auxiliary treatment facilities, retention of untreated wastes, or maintenance during normal periods of equipment downtime. This condition is not satisfied if adequate back-up equipment should have been installed in the exercise of reasonable engineering judgment to prevent a bypass that occurred during normal periods of equipment downtime or preventive maintenance (40 C.F.R. § 122.41(m)(4)(i)(B)); and

c. The Permittee submitted notice to the Regional Water Board as required under Standard Provisions – Permit Compliance I.G.5 below. (40 C.F.R. § 122.41(m)(4)(i)(C).)

DRAFT

4. **Burden of Proof.** In any enforcement proceeding, the Permittee seeking to establish the bypass defense has the burden of proof.

5. The Regional Water Board may approve an anticipated bypass, after considering its adverse effects, if the Regional Water Board determines that it will meet the three conditions listed in Standard Provisions – Permit Compliance I.G.3 above. (40 C.F.R. § 122.41(m)(4)(ii).)

6. **Notice**

   a. **Anticipated bypass.** If the Permittee knows in advance of the need for a bypass, it shall submit a prior notice, if possible at least 10 days before the date of the bypass. (40 C.F.R. § 122.41(m)(3)(i).)

   b. **Unanticipated bypass.** The Permittee shall submit notice of an unanticipated bypass as required in Standard Provisions - Reporting V.E below (24-hour notice). (40 C.F.R. § 122.41(m)(3)(ii).)

H. Upset

Upset means an exceptional incident in which there is unintentional and temporary noncompliance with technology based permit effluent limitations because of factors beyond the reasonable control of the Permittee. An upset does not include noncompliance to the extent caused by operational error, improperly designed treatment facilities, inadequate treatment facilities, lack of preventive maintenance, or careless or improper operation. (40 C.F.R. § 122.41(n)(1).)

1. Effect of an upset. An upset constitutes an affirmative defense to an action brought for noncompliance with such technology based permit effluent limitations if the requirements of Standard Provisions – Permit Compliance I.H.2 below are met. No determination made during administrative review of claims that noncompliance was caused by upset, and before an action for noncompliance, is final administrative action subject to judicial review. (40 C.F.R. § 122.41(n)(2).)

2. Conditions necessary for a demonstration of upset. A Permittee who wishes to establish the affirmative defense of upset shall demonstrate, through properly signed, contemporaneous operating logs or other relevant evidence that (40 C.F.R. § 122.41(n)(3)):

   a. An upset occurred and that the Permittee can identify the cause(s) of the upset (40 C.F.R. § 122.41(n)(3)(i));

   b. The permitted facility was, at the time, being properly operated (40 C.F.R. § 122.41(n)(3)(ii));

   c. The Permittee submitted notice of the upset as required in Standard Provisions – Reporting V.E.2.b below (24-hour notice) (40 C.F.R. § 122.41(n)(3)(iii)); and

   d. The Permittee complied with any remedial measures required under Standard Provisions – Permit Compliance I.C above. (40 C.F.R. § 122.41(n)(3)(iv).)

3. **Burden of proof.** In any enforcement proceeding, the Permittee seeking to establish the occurrence of an upset has the burden of proof. (40 C.F.R. § 122.41(n)(4).)

II. STANDARD PROVISIONS – PERMIT ACTION

A. General

This Order may be modified, revoked and reissued, or terminated for cause. The filing of a request by the Permittee for modification, revocation and reissuance, or termination, or a

DRAFT

notification of planned changes or anticipated noncompliance does not stay any Order condition. (40 C.F.R. § 122.41(f).)

B. Duty to Reapply

If the Permittee wishes to continue an activity regulated by this Order after the expiration date of this Order, the Permittee must apply for and obtain a new permit. (40 C.F.R. § 122.41(b).)

C. Transfers

This Order is not transferable to any person except after notice to the Regional Water Board. The Regional Water Board may require modification or revocation and reissuance of the Order to change the name of the Permittee and incorporate such other requirements as may be necessary under the CWA and the Water Code. (40 C.F.R. § 122.41(l)(3); § 122.61.)

III. STANDARD PROVISIONS – MONITORING

A. Samples and measurements taken for the purpose of monitoring shall be representative of the monitored activity. (40 C.F.R. § 122.41(j)(1).)

B. Monitoring must be conducted according to test procedures under 40 C.F.R. part 136 for the analyses of pollutants unless another method is required under 40 C.F.R., chapter 1, subchapters N or O. Monitoring must be conducted according to sufficiently sensitive test procedures (i.e., methods) approved under 40 C.F.R. part 136 for the analysis of pollutants or pollutant parameters or required under 40 C.F.R. chapter 1, subchapter N or O. For the purposes of this paragraph, a method is "sufficiently sensitive" when:

1. The method minimum level (ML) is at or below the level of the effluent limitation established in the permit for the measured pollutant or pollutant parameter, and, either the method ML is at or below the level of the applicable water quality criterion for the measured pollutant or pollutant parameter or the method ML is above the applicable water quality criterion, but the amount of the pollutant or pollutant parameter in a facility's discharge is high enough that the method detects and quantifies the level of the pollutant or pollutant parameter in the discharge; or

2. The method has the lowest ML of the analytical methods approved under 40 C.F.R. part 136 or required under 40 C.F.R. chapter 1, subchapter N or O for the measured pollutant or pollutant parameter.

In the case of pollutants for which there are no approved methods under 40 C.F.R. part 136 or otherwise required under 40 C.F.R. chapter 1, subchapters N or O, monitoring must be conducted according to a test procedure specified in this Order for such pollutants. (40 C.F.R. § 122.41(j)(4); § 122.44(i)(1)(iv).)

In the case of sludge use or disposal approved under 40 C.F.R. part 136, monitoring must be conducted according to test procedures in part 503 unless otherwise specified in 40 C.F.R. or other test procedures have been specified in this Order.

IV. STANDARD PROVISIONS – RECORDS

A. Except for records of monitoring information required by this Order related to the Permittee's sewage sludge use and disposal activities, which shall be retained for a period of at least five years (or longer as required by 40 C.F.R. part 503), the Permittee shall retain records of all monitoring information, including all calibration and maintenance records and all original strip chart recordings for continuous monitoring instrumentation, copies of all reports required by this Order, and records of all data used to complete the application for this Order, for a period of at least three (3) years from the date of the sample, measurement, report or application. This

DRAFT

period may be extended by request of the Regional Water Board Executive Officer at any time. (40 C.F.R. § 122.41(j)(2).)

B. Records of monitoring information shall include:

1. The date, exact place, and time of sampling or measurements (40 C.F.R. § 122.41(j)(3)(i));

2. The individual(s) who performed the sampling or measurements (40 C.F.R. § 122.41(j)(3)(ii));

3. The date(s) analyses were performed (40 C.F.R. § 122.41(j)(3)(iii));

4. The individual(s) who performed the analyses (40 C.F.R. § 122.41(j)(3)(iv));

5. The analytical techniques or methods used (40 C.F.R. § 122.41(j)(3)(v)); and

6. The results of such analyses. (40 C.F.R. § 122.41(j)(3)(vi).)

C. Claims of confidentiality for the following information will be denied (40 C.F.R. § 122.7(b)):

1. The name and address of any permit applicant or Permittee (40 C.F.R. § 122.7(b)(1)); and

2. Permit applications and attachments, permits and effluent data. (40 C.F.R. § 122.7(b)(2).)

V. STANDARD PROVISIONS – REPORTING

A. Duty to Provide Information

The Permittee shall furnish to the Regional Water Board, State Water Board, or U.S. EPA within a reasonable time, any information which the Regional Water Board, State Water Board, or U.S. EPA may request to determine whether cause exists for modifying, revoking and reissuing, or terminating this Order or to determine compliance with this Order. Upon request, the Permittee shall also furnish to the Regional Water Board, State Water Board, or U.S. EPA copies of records required to be kept by this Order. (40 C.F.R. § 122.41(h); Wat. Code, § 13267.)

B. Signatory and Certification Requirements

1. All applications, reports, or information submitted to the Regional Water Board, State Water Board, and/or U.S. EPA shall be signed and certified in accordance with Standard Provisions – Reporting V.B.2, V.B.3, V.B.4, and V.B.5 below. (40 C.F.R. § 122.41(k).)

2. All permit applications shall be signed by either a principal executive officer or ranking elected official. For purposes of this provision, a principal executive officer of a federal agency includes: (i) the chief executive officer of the agency, or (ii) a senior executive officer having responsibility for the overall operations of a principal geographic unit of the agency (e.g., Regional Administrators of U.S. EPA). (40 C.F.R. § 122.22(a)(3).).

3. All reports required by this Order and other information requested by the Regional Water Board, State Water Board, or U.S. EPA shall be signed by a person described in Standard Provisions – Reporting V.B.2 above, or by a duly authorized representative of that person. A person is a duly authorized representative only if:

a. The authorization is made in writing by a person described in Standard Provisions – Reporting V.B.2 above (40 C.F.R. § 122.22(b)(1));

b. The authorization specifies either an individual or a position having responsibility for the overall operation of the regulated facility or activity such as the position of plant manager, operator of a well or a well field, superintendent, position of equivalent responsibility, or an individual or position having overall responsibility for environmental matters for the company. (A duly authorized representative may thus

DRAFT

be either a named individual or any individual occupying a named position.) (40 C.F.R. § 122.22(b)(2)); and

c. The written authorization is submitted to the Regional Water Board and State Water Board. (40 C.F.R. § 122.22(b)(3).)

4. If an authorization under Standard Provisions – Reporting V.B.3 above is no longer accurate because a different individual or position has responsibility for the overall operation of the facility, a new authorization satisfying the requirements of Standard Provisions – Reporting V.B.3 above must be submitted to the Regional Water Board and State Water Board prior to or together with any reports, information, or applications, to be signed by an authorized representative. (40 C.F.R. § 122.22(c).)

5. Any person signing a document under Standard Provisions – Reporting V.B.2 or V.B.3 above shall make the following certification:

"I certify under penalty of law that this document and all attachments were prepared under my direction or supervision in accordance with a system designed to assure that qualified personnel properly gather and evaluate the information submitted. Based on my inquiry of the person or persons who manage the system or those persons directly responsible for gathering the information, the information submitted is, to the best of my knowledge and belief, true, accurate, and complete. I am aware that there are significant penalties for submitting false information, including the possibility of fine and imprisonment for knowing violations." (40 C.F.R. § 122.22(d).)

6. Any person providing the electronic signature for documents described in Standard Provisions – V.B.1, V.B.2, or V.B.3 that are submitted electronically shall meet all relevant requirements of Standard Provisions – Reporting V.B, and shall ensure that all relevant requirements of 40 C.F.R. part 3 (Cross-Media Electronic Reporting) and 40 C.F.R. part 127 (NPDES Electronic Reporting Requirements) are met for that submission. (40 C.F.R. § 122.22(e).)

C. Monitoring Reports

1. Monitoring results shall be reported at the intervals specified in the Monitoring and Reporting Program (Attachment E) in this Order. (40 C.F.R. § 122.41(l)(4).)

2. Monitoring results must be reported on a Discharge Monitoring Report (DMR) form or forms provided or specified by the Regional Water Board or State Water Board for reporting results of monitoring, sludge use, or disposal practices. As of December 21, 2016, all reports and forms must be submitted electronically to the initial recipient defined in Standard Provisions – Reporting V.J and comply with 40 C.F.R. part 3, 40 C.F.R. section 122.22, and 40 C.F.R. part 127. (40 C.F.R. § 122.41(l)(4)(i).)

3. If the Permittee monitors any pollutant more frequently than required by this Order using test procedures approved under 40 C.F.R. part 136, or another method required for an industry-specific waste stream under 40 C.F.R. chapter 1, subchapters N or O, the results of such monitoring shall be included in the calculation and reporting of the data submitted in the DMR or sludge reporting form specified by the Regional Water Board. (40 C.F.R. § 122.41(l)(4)(ii).)

4. Calculations for all limitations, which require averaging of measurements, shall utilize an arithmetic mean unless otherwise specified in this Order. (40 C.F.R. § 122.41(l)(4)(iii).)

D. Compliance Schedules

DRAFT

Reports of compliance or noncompliance with, or any progress reports on, interim and final requirements contained in any compliance schedule of this Order, shall be submitted no later than 14 days following each schedule date. (40 C.F.R. § 122.41(l)(5).)

E. Twenty-Four Hour Reporting

1. The Permittee shall report any noncompliance that may endanger health or the environment. Any information shall be provided orally within 24 hours from the time the Permittee becomes aware of the circumstances. A written submission shall also be provided within five (5) days of the time the Permittee becomes aware of the circumstances. The written submission shall contain a description of the noncompliance and its cause; the period of noncompliance, including exact dates and times, and if the noncompliance has not been corrected, the anticipated time it is expected to continue; and steps taken or planned to reduce, eliminate, and prevent reoccurrence of the noncompliance. (40 C.F.R. § 122.41(l)(6)(i).)

For noncompliance events related to combined sewer overflows, sanitary sewer overflows, or bypass events, these reports must include the data described above (with the exception of time of discovery) as well as the type of event (i.e., combined sewer overflow, sanitary sewer overflow, or bypass event), type of overflow structure (e.g., manhole, combined sewer overflow outfall), discharge volume untreated by the treatment works treating domestic sewage, types of human health and environmental impacts of the event, and whether the noncompliance was related to wet weather.

As of December 21, 2020, all reports related to combined sewer overflows, sanitary sewer overflows, or bypass events must be submitted to the Regional Water Board and must be submitted electronically to the initial recipient defined in Standard Provisions – Reporting V.J. The reports shall comply with 40 C.F.R. part 3, 40 C.F.R. section 122.22, and 40 C.F.R. part 127. The Regional Water Board may also require the Permittee to electronically submit reports not related to combined sewer overflows, sanitary sewer overflows, or bypass events under this section. (40 C.F.R. § 122.41(l)(6)(i).)

2. The following shall be included as information that must be reported within 24 hours under this paragraph (40 C.F.R. § 122.41(l)(6)(ii)):

a. Any unanticipated bypass that exceeds any effluent limitation in this Order. (40 C.F.R. § 122.41(l)(6)(ii)(A).)

b. Any upset that exceeds any effluent limitation in this Order. (40 C.F.R. § 122.41(l)(6)(ii)(B).)

3. The Regional Water Board may waive the above-required written report under this provision on a case-by-case basis if an oral report has been received within 24 hours. (40 C.F.R. § 122.41(l)(6)(iii).)

F. Planned Changes

The Permittee shall give notice to the Regional Water Board as soon as possible of any planned physical alterations or additions to the permitted facility. Notice is required under this provision only when (40 C.F.R. § 122.41(l)(1)):

1. The alteration or addition to a permitted facility may meet one of the criteria for determining whether a facility is a new source in section 122.29(b) (40 C.F.R. § 122.41(l)(1)(i)); or

DRAFT

2. The alteration or addition could significantly change the nature or increase the quantity of pollutants discharged. This notification applies to pollutants that are not subject to effluent limitations in this Order. (40 C.F.R. § 122.41(l)(1)(ii).)

3. The alteration or addition results in a significant change in the Permittee's sludge use or disposal practices, and such alteration, addition, or change may justify the application of permit conditions that are different from or absent in the existing permit, including notification of additional use or disposal sites not reported during the permit application process or not reported pursuant to an approved land application plan. (40 C.F.R. § 122.41(l)(1)(iii).)

G. Anticipated Noncompliance

The Permittee shall give advance notice to the Regional Water Board of any planned changes in the permitted facility or activity that may result in noncompliance with this Order's requirements. (40 C.F.R. § 122.41(l)(2).)

H. Other Noncompliance

The Permittee shall report all instances of noncompliance not reported under Standard Provisions – Reporting V.C, V.D, and V.E above at the time monitoring reports are submitted. The reports shall contain the information listed in Standard Provision – Reporting V.E above. For noncompliance events related to combined sewer overflows, sanitary sewer overflows, or bypass events, these reports shall contain the information described in Standard Provision – Reporting V.E and the applicable required data in appendix A to 40 C.F.R. part 127. The Regional Water Board may also require the Permittee to electronically submit reports not related to combined sewer overflows, sanitary sewer overflows, or bypass events under this section. (40 C.F.R. § 122.41(l)(7).)

I. Other Information

When the Permittee becomes aware that it failed to submit any relevant facts in a permit application, or submitted incorrect information in a permit application or in any report to the Regional Water Board, State Water Board, or U.S. EPA, the Permittee shall promptly submit such facts or information. (40 C.F.R. § 122.41(l)(8).)

J. Initial Recipient for Electronic Reporting Data

The owner, operator, or the duly authorized representative is required to electronically submit NPDES information specified in appendix A to 40 C.F.R. part 127 to the initial recipient defined in 40 C.F.R. section 127.2(b). U.S. EPA will identify and publish the list of initial recipients on its website and in the Federal Register, by state and by NPDES data group [see 40 C.F.R. section 127.2(c)]. U.S. EPA will update and maintain this listing. (40 C.F.R. § 122.41(l)(9).)

VI. STANDARD PROVISIONS – ENFORCEMENT

A. The Regional Water Board is authorized to enforce the terms of this permit under several provisions of the Water Code, including, but not limited to, sections 13385, 13386, and 13387.

VII. ADDITIONAL PROVISIONS – NOTIFICATION LEVELS

A. Publicly-Owned Treatment Works (POTWs)

All POTWs shall provide adequate notice to the Regional Water Board of the following (40 C.F.R. § 122.42(b)):

1. Any new introduction of pollutants into the POTW from an indirect discharger that would be subject to sections 301 or 306 of the CWA if it were directly discharging those pollutants (40 C.F.R. § 122.42(b)(1)); and

DRAFT

2. Any substantial change in the volume or character of pollutants being introduced into that POTW by a source introducing pollutants into the POTW at the time of adoption of this Order (40 C.F.R. § 122.42(b)(2)).

3. Adequate notice shall include information on the quality and quantity of effluent introduced into the POTW as well as any anticipated impact of the change on the quantity or quality of effluent to be discharged from the POTW. (40 C.F.R. § 122.42(b)(3)).

DRAFT

ATTACHMENT E – MONITORING AND REPORTING PROGRAM

Contents

I. General Monitoring Provisions E-2
II. Monitoring Locations E-3
III. Influent Monitoring Requirements E-4
  A. Monitoring Location INF-001 ..... E-4
IV. Effluent Monitoring Requirements E-5
  A. Monitoring Location EFF-001 ..... E-5
V. Whole Effluent Toxicity Testing Requirements E-6
  A. Chronic Toxicity Testing E-6
  B. Toxicity Reduction Evaluation (TRE) Process E-10
VI. Land Discharge Monitoring Requirements – Not Applicable E-11
VII. Recycling Monitoring Requirements E-11
  A. Monitoring Location REC-001 ..... E-11
VIII. Receiving Water Monitoring Requirements – Surface Water and Groundwater E-12
  A. Monitoring Location RSW-001 ..... E-12
  B. Groundwater Monitoring – Not Required E-13
IX. Other Monitoring Requirements E-13
  A. Outfall Inspection E-13
  B. Biological Survey E-13
  C. Filtration Process Monitoring (Monitoring Locations INT-001A and INT-001B) E-13
  D. Disinfection Process Monitoring (Monitoring Location INT-002) E-14
  E. Sludge Monitoring (Monitoring Location BIO-001) E-14
  F. Septage Station Monitoring (Monitoring Location SEP-001) E-15
X. Reporting Requirements E-16
  A. General Monitoring and Reporting Requirements E-16
  B. Self-Monitoring Reports (SMRs) E-16
  C. Discharge Monitoring Reports (DMRs) E-18
  D. Other Reports E-19
  E. Spill Notification E-23

Tables

Table E-1. Monitoring Station Locations E-3
Table E-2. Monitoring Station Locations E-4
Table E-3. Influent Monitoring E-4
Table E-4. Effluent Monitoring – Monitoring Location EFF-001 ..... E-5
Table E-5. Recycled Water Monitoring – Monitoring Location REC-001 ..... E-11
Table E-6. Receiving Water Monitoring – Monitoring Location RSW-001 ..... E-12
Table E-7. Septage Monitoring – Monitoring Location SEP-001 ..... E-15
Table E-8. Monitoring Periods and Reporting Schedule E-16
Table E-7. Reporting Requirements for Special Provisions Reports E-19

DRAFT

ATTACHMENT E – MONITORING AND REPORTING PROGRAM (MRP)

The Code of Federal Regulations (40 C.F.R. § 122.48) requires that all NPDES permits specify monitoring and reporting requirements. California Water Code section 13383 also authorizes the Regional Water Board to require technical and monitoring reports. This MRP establishes monitoring and reporting requirements that implement federal and California regulations.

I. GENERAL MONITORING PROVISIONS

A. Wastewater Monitoring Provision. Composite samples may be taken by a proportional sampling device approved by the Executive Officer or by grab samples composited in proportion to flow. In compositing grab samples, the sampling interval shall not exceed 1 hour.

B. Supplemental Monitoring Provision. If the Permittee monitors any pollutant more frequently than required by this Order, using test procedures approved by 40 C.F.R. part 136 or as specified in this Order, the results of such monitoring shall be included in the calculation and reporting of the data submitted in the monthly and annual discharge monitoring reports.

C. Laboratory Certification. Laboratories analyzing monitoring samples shall be certified by the State Water Resources Control Board (State Water Board) in accordance with the provisions of Water Code section 13176, and must include quality assurance/quality control data with their analytical reports.

D. Instrumentation and Calibration Provision. All monitoring instruments and devices used by the Permittee to fulfill the prescribed monitoring program shall be properly maintained and calibrated as necessary to ensure their continued accuracy. All flow measurement devices shall be calibrated no less than the manufacturer's recommended intervals or one year intervals, (whichever comes first) to ensure continued accuracy of the devices.

E. Minimum Levels (ML) and Reporting Levels (RL). Compliance and reasonable potential monitoring analyses shall be conducted using detection limits that are lower than the applicable effluent limitations and/or water quality objectives in Table 1 of the Ocean Plan. If no Minimum Level (ML) value is below these levels, the lowest ML shall be selected as the Reporting Level (RL). Table E-1 lists the test methods the Permittee may use for compliance and reasonable potential monitoring to analyze Ocean Plan Table 1 pollutants with effluent limitations or specific monitoring requirements. Appendix II of the Ocean Plan lists the test methods the Permittee may use for reasonable potential monitoring to analyze Ocean Plan Table 1 pollutants.

DRAFT

Table E-1. Monitoring Station Locations

Constituent	Types of Analytical Methods MLs (µg/L)						
	Flame Atomic Absorption	**Graphite Furnace Atomic Absorption**	**Inductively Coupled Plasma**	**Inductively Coupled Plasma / Mass Spectrometry**	**Stabilized Platform Graphite Furnace Atomic Absorption**	**Gas Chromatography**	**Gas Chromatography/ Mass Spectrometry**
Copper, Total Recoverable	20	5	10	0.5	2	--	--
Nickel, Total Recoverable	50	5	10	1	5	--	--
Bis(2-ethylhexyl) phthalate	--	--	--	--	--	10	5
Dieldrin	--	--	--	--	--	0.01	--
TCDD Equivalents[1]	--	--	--	--	--	--	--
Tetrachloroethylene	--	--	--	--	--	0.5	2

Table Notes:
1. The Permittee shall use U.S. EPA Method 1613.

F. Discharge Monitoring Report Quality Assurance (DMR-QA) Study. The Permittee shall ensure that the results of the DMR-QA Study or the most recent Water Pollution Performance Evaluation Study are submitted annually to the State Water Board at the following address:

State Water Resources Control Board
Quality Assurance Program Officer
Office of Information Management and Analysis
1001 I Street, Sacramento, CA 95814

II. MONITORING LOCATIONS

The Permittee shall establish the following monitoring locations to demonstrate compliance with the effluent limitations, discharge specifications, and other requirements in this Order:

DRAFT

Table E-2. Monitoring Station Locations

Discharge Point Name	Monitoring Location Name	Monitoring Location Description
--	INF-001	Influent wastewater prior to treatment and following all significant input of waste to the treatment system and consisting of wastewater from both the collection system and any future septage receiving station.
--	INT-001A	Location for monitoring the surface loading rate through the membrane bioreactor (MBR) system.
--	INT-001B	Treated effluent immediately following the MBR system for monitoring turbidity.
--	INT-002	Location for monitoring ultraviolet light (UV) radiation dose and UV transmittance of the UV disinfection system.
001	EFF-001	A location where representative samples of the treated wastewater to be discharged to the Pacific Ocean at Discharge Point 001 can be collected at a point after treatment, including chlorination/dechlorination, and before contact with the receiving water.
002	REC-001	Location where the flow rate of recycled water can be monitored and representative samples of treated wastewater to be distributed to the recycled water system can be collected.
--	RSW-001	Location in the receiving water in the vicinity of the outfall, within the waste field where initial dilution is completed.
--	SEP-001	Septage receiving station after complete mixing of septage wastes and prior to the headworks. This station may be estabilished upon receipt and Regional Water Board Executive Officer approval of a Septage Management Plan.
--	BIO-001	A representative sample of the sludge or biosolids generated when removed for disposal.

III. INFLUENT MONITORING REQUIREMENTS

A. Monitoring Location INF-001

1. The Permittee shall monitor influent to the Facility at Monitoring Location INF-001 at Discharge Point 001 as follows:

Table E-3. Influent Monitoring

Parameter	Units	Sample Type	Minimum Sampling Frequency	Required Analytical Test Method[1]
Influent Flow[2]	mgd	Meter	Continuous	--
Biochemical Oxygen Demand 5-day @ 20°C (BOD_5)	mg/L	24-hr Composite	Weekly	Standard Methods
Total Suspended Solids (TSS)	mg/L	24-hr Composite	Weekly	Standard Methods
Ocean Plan Table B[3]	µg/L	Grab/Composite[4]	Once per permit term[5]	Standard Methods

DRAFT

Parameter	Units	Sample Type	Minimum Sampling Frequency	Required Analytical Test Method[1]

Table Notes:
1. In accordance with the current edition of *Standard Methods for Examination of Water and Wastewater* (American Public Health Administration) or current test procedures specified in 40 C.F.R. part 136.
2. Each month, the Permittee shall report the average daily and average monthly flows.
3. Excluding acute and chronic toxicity and total chlorine residual.
4. Grab samples shall be used for volatile chemicals listed in Table II-1 of the Ocean Plan (2012). 24-hour composite samples shall be used for all other Ocean Plan Table 1 parameters.
5. Within the first year of the permit term.

IV. EFFLUENT MONITORING REQUIREMENTS

A. Monitoring Location EFF-001

1. The Permittee shall monitor treated effluent at Monitoring Location EFF-001 during periods of discharge to the Pacific Ocean at Discharge Point 001 as follows:

Table E-4. Effluent Monitoring – Monitoring Location EFF-001

Parameter	Units	Sample Type	Minimum Sampling Frequency	Required Analytical Test Method[1]
Effluent Flow[2]	mgd	Meter	Continuous	--
Biochemical Oxygen Demand 5-day @ 20°C (BOD_5)	mg/L	24-hr Composite	Weekly[3]	Standard Methods
	lbs/day	Calculate	Weekly[3]	--
	% Removal	Calculate	Monthly	--
Total Suspended Solids (TSS)	mg/L	24-hr Composite	Weekly[3]	Standard Methods
	lbs/day	Calculate	Weekly[3]	--
	% Removal	Calculate	Monthly	--
Settleable Solids	ml/L	Grab	Daily[4]	Standard Methods
Oil and Grease	mg/L	Grab	Monthly[5]	Standard Methods
Turbidity	NTU	Grab	Weekly[3]	Standard Methods
pH	s.u.	Grab	Daily[4]	Standard Methods
Fecal Coliform Bacteria	MPN/100 mL	Grab	Weekly[3]	Standard Methods
Ammonia Nitrogen, Total (as N)	mg/L	Grab	Weekly[3]	Standard Methods
Copper, Total Recoverable	µg/L	24-hr Composite	Monthly[5]	FAA (ML 20 µg/L), GFAA (ML 5 µg/L), ICP (ML 10 µg/L), ICPMS (ML 0.5 µg/L), SPGFAA (ML 2 µg/L)[6]
Nickel, Total Recoverable	µg/L	24-hr Composite	Monthly[5]	FAA (ML 50 µg/L), GFAA (ML 5 µg/L), ICP (ML 20 µg/L), ICPMS (ML 1 µg/L), SPGFAA (ML 5 µg/L)[6]
Total Residual Chlorine[7]	mg/L	Grab	Daily[4]	Standard Methods
Bis(2-ethylhexyl) phthalate	µg/L	Grab	Annually[5,8]	GC (ML 10 µg/L), GCMS (ML 5 µg/L)[6]
Dieldrin	µg/L	Grab	Annually[5]	GC (ML 0.01 µg/L)[6]

DRAFT

Parameter	Units	Sample Type	Minimum Sampling Frequency	Required Analytical Test Method[1]
TCDD Equivalents[9]	µg/L	24-hr Composite	Annually[5]	Standard Methods
Tetrachloroethylene	µg/L	24-hr Composite	Annually[5]	GC (ML 0.5 µg/L), GCMS (ML 2 µg/L)[6]
Ocean Plan Table 1 Pollutants[10]	µg/L	Grab/ Composite[11]	Annually[5]	Standard Methods
Chronic Toxicity[12]	Pass or Fail, % Effect	Grab	Semiannually	See Section V below

Table Notes:

1. In accordance with the current edition of *Standard Methods for Examination of Water and Wastewater* (American Public Health Administration) or current test procedures specified in 40 C.F.R. part 136.
2. Each month, the Permittee shall report the daily average and monthly average flows.
3. Accelerated Monitoring (weekly monitoring frequency). If two consecutive weekly test results exceed an effluent limitation, the Permittee shall take two samples each of the two weeks following receipt of the second sample result. During the intervening period, the Permittee shall take steps to identify the cause of the exceedance and take steps to return to compliance.
4. Accelerated Monitoring (daily monitoring frequency). If a test result exceeds an effluent limitation, the Permittee shall increase the monitoring frequency to a minimum of twice a day for a week to evaluate whether the exceedance is persisting. If two or more samples in a week exceed an effluent limitation, the Permittee shall take steps to identify the cause of the exceedance and take steps needed to return to compliance.
5. Accelerated Monitoring (monthly and annual monitoring frequency). If a test result exceeds an effluent limitation the Permittee shall take two more samples, one within 7 days and one within 14 days following receipt of the initial sample result. During the intervening period, the Permittee shall take steps to identify the cause of the exceedance and take steps needed to return to compliance.
6. FAA = Flame Atomic Absorption
   GFAA = Graphite Furnace Atomic Absorption
   ICP = Inductively Coupled Plasma
   ICPMS = Inductively Coupled Plasma / Mass Spectrometry
   SPGFAA = Stabilized Platform Graphite Furnace Atomic Absorption
   GC = Gas Chromatography
   GCMS = Gas Chromatography / Mass Spectrometry
7. For purposes of determining compliance, grab samples shall be taken at the end of the chlorine contact system.
8. In order to verify bis(2-ethylhexyl) phthalate is truly present in the effluent discharge, the Permittee shall take steps to assure that sample containers, sampling apparatus, and analytical equipment are not sources of the detected contaminant.
9. TCDD equivalents shall mean the sum of the concentrations of chlorinated dibenzodioxins (2,3,7,8-CDDs) and chlorinated dibenzofurans (2,3,7,8-CDFs) multiplied by their respective toxicity factors.
10. Excluding acute toxicity.
11. Grab samples shall be used for volatile chemicals listed in Table II-1 of the Ocean Plan (2012). 24-hour composite samples shall be used for all other Ocean Plan Table 1 parameters.
12. Whole effluent chronic toxicity shall be monitored in accordance with the requirements of section V of this Monitoring and Reporting Program.

V. WHOLE EFFLUENT TOXICITY TESTING REQUIREMENTS

A. Chronic Toxicity Testing

The Permittee shall conduct chronic toxicity testing in accordance with the following chronic toxicity testing requirements:

1. **Test Frequency.** The Permittee shall conduct chronic WET testing semiannually, once during the first quarter and once during the third quarter of each calendar year, while discharging at Discharge Point 001, as summarized in Table E-4, above.

2. **Discharge In-stream Waste Concentration (IWC) for Chronic Toxicity.** The chronic toxicity IWC for this discharge is 3.45 percent effluent.

DRAFT

3. **Sample Volume and Holding Time.** The total sample volume shall be determined by the specific toxicity test method used. Sufficient sample volume shall be collected to perform the required toxicity test. All toxicity tests shall be conducted as soon as possible following sample collection.

   For toxicity tests requiring renewals (*Atherinops affinis*), a minimum of three samples shall be collected. The lapsed time (holding time) from sample collection to first use of each sample must not exceed 36 hours.

4. **Chronic Marine Test Species and Test Methods.** If effluent samples are collected from outfalls discharging to receiving waters with salinity >1 ppt, the Permittee shall conduct the following chronic toxicity tests on effluent samples at the IWC for the discharge in accordance with species and test methods in *Short-term Methods for Estimating the Chronic Toxicity of Effluents and Receiving Waters to West Coast Marine and Estuarine Organisms* (EPA/600/R-95/136, 1995). Artificial sea salts shall be used to increase sample salinity. In no case shall these species be substituted with another test species unless written authorization from the Executive Officer is received.

   a. A static renewal toxicity test with the topsmelt, *Atherinops affinis* (Larval Survival and Growth Test Method 1006.0).

   b. A static non-renewal toxicity test with the purple sea urchin, *Strongylocentrotus purpuratus*, and the sand dollar, *Dendraster excentricus* (Fertilization Test Method 1008.0), or a static non-renewal toxicity test with the red abalone, *Haliotis rufescens* (Larval Shell Development Test Method).

   c. A static non-renewal toxicity test with the giant kelp, *Macrocystis pyrifera* (Germination and Growth Test Method 1009.0).

5. **Species Sensitivity Screening.** Species sensitivity screening shall be conducted during this permit's first required sample collection. The Permittee shall collect a single effluent sample and concurrently conduct three chronic toxicity tests using the fish, an invertebrate, and the alga species identified in section V.A.4, above. This sample shall also be analyzed for the parameters required for the discharge. The species that exhibits the highest "Percent (%) Effect" at the discharge IWC during species sensitivity screening shall be used for routine monitoring during the permit term.

6. **Quality Assurance and Additional Requirements.** Quality assurance measures, instructions, and other recommendations and requirements are found in the test methods manual previously referenced. Additional requirements are specified below.

   a. The discharge is subject to determination of "Pass" or "Fail" and "Percent (%) Effect" for chronic toxicity tests using the TST approach described in *National Pollutant Discharge Elimination System Test of Significant Toxicity Implementation Document* (EPA 833-R10-003, 2010), Appendix A, Figure A-1, and Table A-1. The null hypothesis (H_o) for the TST approach is: Mean discharge IWC response ≤ 0.75 × Mean control response. A test result that rejects this null hypothesis is reported as "Pass". A test result that does not reject this null hypothesis is reported as "Fail". The relative "Percent (%) Effect" at the discharge IWC is defined and reported as: ((Mean control response - Mean discharge IWC response) ÷ Mean control response)) × 100.

   b. If the effluent toxicity test does not meet the minimum effluent or reference toxicant test acceptability criteria (TAC) specified in the referenced test method, then the Permittee shall re-sample and re-test within 14 days.

DRAFT

c. Dilution water and control water, including brine controls, shall be laboratory water prepared and used as specified in the test methods manual. If dilution water and control water is different from test organism culture water, then a second control using culture water shall also be used.

d. Monthly reference toxicant testing is sufficient. All reference toxicant test results should be reviewed and reported.

e. The Permittee shall perform toxicity tests on final effluent samples. Chlorine and ammonia shall not be removed from the effluent sample prior to toxicity testing, unless explicitly authorized under this section of the MRP and the rationale is explained in the Fact Sheet (Attachment F).

f. **Ammonia Removal.** Except with prior approval from the Executive Officer of the Regional Water Board, ammonia shall not be removed from bioassay samples. The Permittee must demonstrate the effluent toxicity is caused by ammonia because of increasing test pH when conducting the toxicity test. It is important to distinguish the potential toxic effects of ammonia from other pH sensitive chemicals, such as certain heavy metals, sulfide, and cyanide. The following may be steps to demonstrate that the toxicity is caused by ammonia and not other toxicants before the Executive Officer would allow for control of pH in the test.

   i. There is consistent toxicity in the effluent and the maximum pH in the toxicity test is in the range to cause toxicity due to increased pH.

   ii. Chronic ammonia concentrations in the effluent are greater than 4 mg/L total ammonia.

   iii. Conduct graduated pH tests as specified in the toxicity identification evaluation methods. For example, mortality should be higher at pH 8 and lower at pH 6.

   iv. Treat the effluent with a zeolite column to remove ammonia. Mortality in the zeolite treated effluent should be lower than the non-zeolite treated effluent. Then add ammonia back to the zeolite-treated samples to confirm toxicity due to ammonia.

When it has been demonstrated that toxicity is due to ammonia because of increasing test pH, pH may be controlled using appropriate procedures which do not significantly alter the nature of the effluent.

7. **Notification.** The Permittee shall notify the Regional Water Board verbally within 72 hours and in writing within 14 days after the receipt of a result of "Fail" during routine or accelerated monitoring.

8. **Accelerated Monitoring Requirements.** The trigger for accelerated monitoring for chronic toxicity is exceeded when a chronic toxicity test, analyzed using the TST approach, results in "Fail" and the "Percent Effect" is ≥0.50. Within 24 hours of the time the Permittee becomes aware of a result of "Fail", the Permittee shall implement an accelerated monitoring schedule consisting of four toxicity tests—consisting of 5-effluent concentrations (including the discharge IWC) and a control—conducted at approximately 2 week intervals, over an 8 week period. If each of the accelerated toxicity tests results is "Pass," the Permittee shall return to routine monitoring for the next monitoring period. If one of the accelerated toxicity tests results is "Fail", the Permittee shall immediately implement the TRE Process conditions set forth in section V.B, below.

9. **Reporting**

DRAFT

a. **Routine Reporting.** The self-monitoring report (SMR) shall include a full laboratory report for the month that chronic toxicity monitoring was performed (WET report). Routine reporting shall include the following in order to demonstrate compliance with permit requirements:

i. WET reports shall include the contracting laboratory's complete report provided to the Permittee and shall be consistent with the appropriate "Report Preparation and Test Review" sections of the methods manual and this MRP. The WET test reports shall contain a narrative report that includes details about WET test procedures and results, including the following:

(a) Receipt and handling of the effluent sample that includes a tabular summary of initial water quality characteristics (e.g., pH, dissolved oxygen, temperature, conductivity, hardness, salinity, chlorine, ammonia);

(b) The source and make-up of the lab control/diluent water used for the test;

(c) Any manipulations done to lab control/diluent and effluent such as filtration, nutrient addition, etc.;

(d) Identification of any reference toxicant testing performed;

(e) Tabular summary of test results for control water and each effluent dilution and statistics summary to include calculation of the NOEC, TUc, and IC25;

(f) The toxicity test results for the TST approach, reported as "Pass" or "Fail" and "Percent (%) Effect" at the chronic toxicity IWC for the discharge;

(g) Identification of any anomalies or nuances in the test procedures or results;

(h) Summary and conclusions section.

(i) WET test results shall include, at a minimum, for each test:

(1) Sample date(s);

(2) Test initiation date;

(3) Test species;

(4) Determination of "Pass" or "Fail" and "Percent Effect" following the Test of Significant Toxicity hypothesis testing approach in *National Pollutant Discharge Elimination System Test of Significant Toxicity Implementation Document* (EPA 833-R-10-003, 2010). The "Percent Effect" shall be calculated as follows:

"Percent Effect" (or Effect, in %) = ((Control mean response – IWC mean response) ÷ Control mean response)) x 100

(5) End point values for each dilution (e.g., number of young, growth rate, percent survival);

(6) NOEC value(s) in percent effluent;

(7) IC15, IC25, IC40, and IC50 values (or EC15, EC25…etc.) in percent effluent;

(8) TUc values (100/NOEC);

(9) Mean percent mortality (±s.d.) after 96 hours in 100 percent effluent (if applicable);

DRAFT

(10) NOEC and LOEC values for reference toxicant test(s);

(11) IC50 or EC50 value(s) for reference toxicant test(s);

(12) Available water quality measurements for each test (e.g., pH, DO, temperature, conductivity, hardness, salinity, ammonia);

(13) Statistical methods used to calculate endpoints;

(14) The statistical program (e.g., TST calculator, CETIS, etc.) output results, which includes the calculation of percent minimum significant difference (PMSD); and

(15) Results of applicable reference toxicant data with the statistical output page identifying the species, NOEC, LOEC, type of toxicant, dilution water used, concentrations used, PMSD and dates tested; the reference toxicant control charts for each endpoint, to include summaries of reference toxicant tests performed by the contracting laboratory; and any information on deviations from standard test procedures or problems encountered in completing the test and how the problems were resolved.

b. **TRE/TIE Results.** The Executive Officer shall be notified no later than 30 days from completion of each aspect of TRE/TIE analyses. TRE/TIE results shall be submitted to the Regional Water Board within 60 days of completion.

B. Toxicity Reduction Evaluation (TRE) Process

1. **TRE Work Plan.** The Permittee submitted a revised TRE Work Plan to the Regional Water Board on October 1, 2014. The Permittee's TRE Work Plan shall be reviewed and updated as necessary in order to remain current and applicable to the discharge and discharge facilities.

The Permittee shall notify the Regional Water Board of this review and submit any revisions of the TRE Work Plan within 90 days of the notification, to be ready to respond to toxicity events. The TRE Work Plan shall describe the steps the Permittee intends to follow if toxicity is detected, and should include at least the following items:

a. A description of the investigation and evaluation techniques that would be used to identify potential causes and sources of toxicity, effluent variability, and treatment system efficiency.

b. A description of the facility's methods of maximizing in-house treatment efficiency, good housekeeping practices, and a list of all chemicals used in the operation of this Facility.

c. If a toxicity identification evaluation (TIE) is necessary, an indication of the person who would conduct the TIEs (i.e., an in-house expert or an outside contractor).

2. **Preparation and Implementation of a Detailed TRE Work Plan.** If one of the accelerated toxicity tests described in section V.A.8, above, results in "Fail", the Permittee shall immediately initiate a TRE using, according to type of treatment facility, EPA manual *Generalized Methodology for Conducting Industrial Toxicity Reduction Evaluations* (EPA/600/2-88/070, 1989) and within 30 days of receipt of the accelerated monitoring result submit to the Regional Water Board Executive Officer a Detailed TRE Work Plan, which shall follow the generic TRE Work Plan revised as appropriate for the toxicity event described in section V.A.8 of this MRP. The Detailed TRE Work Plan shall include the

DRAFT

following information, and comply with additional conditions set by the Regional Water Board Executive Officer:

a. Further actions by the Permittee to investigate, identify, and correct causes of toxicity.

b. Actions the Permittee will take to mitigate effects of the discharge and prevent the recurrence of toxicity.

c. A schedule for these actions, progress reports, and the final report.

3. **TIE Implementation.** The Permittee may initiate a TIE as part of a TRE to identify the causes of toxicity using the same species and test methods and, as guidance, EPA manuals: *Methods for Aquatic Toxicity Identification Evaluations: Phase I Toxicity Characterization Procedures* (EPA/600/6-91/003, 1991); *Methods for Aquatic Toxicity Identification Evaluations, Phase II Toxicity Identification Procedures for Samples Exhibiting Acute and Chronic Toxicity* (EPA/600/R-92/080, 1993); *Methods for Aquatic Toxicity Identification Evaluations, Phase III Toxicity Confirmation Procedures for Samples Exhibiting Acute and Chronic Toxicity* (EPA/600/R-92/081, 1993); and *Marine Toxicity Identification Evaluation (TIE): Phase I Guidance Document* (EPA/600/R-96- 054, 1996). The TIE should be conducted on the species demonstrating the most sensitive toxicity response.

4. Many recommended TRE elements parallel required or recommended efforts for source control, pollution prevention, and storm water control programs. TRE efforts should be coordinated with such efforts. As toxic substances are identified or characterized, the Permittee shall continue the TRE by determining the sources and evaluating alternative strategies for reducing or eliminating the substances from the discharge. All reasonable steps shall be taken to reduce toxicity to levels consistent with toxicity evaluation parameters.

5. The Permittee shall conduct routine effluent monitoring for the duration of the TRE process. Additional accelerated monitoring and TRE work plans are not required once a TRE has begun.

6. The Regional Water Board recognizes that toxicity may be episodic and identification of the causes and reduction of sources of toxicity may not be successful in all cases. The TRE may be ended at any stage if monitoring finds there is no longer toxicity.

VI. LAND DISCHARGE MONITORING REQUIREMENTS – NOT APPLICABLE

This Order does not authorize discharges to land.

VII. RECYCLING MONITORING REQUIREMENTS

The following requirements apply after the Permittee implements a recycled water system.

A. Monitoring Location REC-001

1. The Permittee shall monitor effluent to the recycled water system at Monitoring Location REC-001 as follows:

Table E-5. Recycled Water Monitoring – Monitoring Location REC-001

Parameter	Units	Sample Type	Minimum Sampling Frequency	Required Analytical Test Method[1]
Flow[2]	mgd	Meter	Continuous	--
Biochemical Oxygen Demand 5-day @ 20°C	mg/L	24-hr Composite	Weekly	Standard Methods
pH	s.u.	Grab	Weekly	Standard Methods

Parameter	Units	Sample Type	Minimum Sampling Frequency	Required Analytical Test Method[1]
Total Suspended Solids (TSS)	mg/L	24-hr Composite	Weekly	Standard Methods
Total Coliform Bacteria	MPN/100 mL	Grab	Daily	Standard Methods
Nitrate Nitrogen, Total (as N)[3]	mg/L	Grab	Monthly	Standard Methods
Nitrite Nitrogen (as N)[3]	mg/L	Grab	Monthly	Standard Methods
Ammonia Nitrogen (as N)[3]	mg/L	Grab	Monthly	Standard Methods
Organic Nitrogen (as N)[3]	mg/L	Grab	Monthly	Standard Methods
Total Dissolved Solids (TDS)	mg/L	Grab	Monthly[4]	Standard Methods

Table Notes:
1. In accordance with the current edition of *Standard Methods for Examination of Water and Wastewater* (American Public Health Administration) or current test procedures specified in 40 C.F.R. part 136.
2. Each month, the Permittee shall report the daily average and monthly average flows.
3. Monitoring for nitrate, nitrite, ammonia, and organic nitrogen is for the purpose of determining total nitrogen concentration for agronomic rate calculations.
4. The monitoring frequency for TDS may be reduced to annually if the first 12 months of monitoring data collected after the effective date of this Order demonstrate that concentrations of TDS are consistently lower than water quality objectives for protection of groundwater.

2. The Permittee shall comply with Water Recycling Specifications and Requirements contained in section IV.C of this Order.

VIII. RECEIVING WATER MONITORING REQUIREMENTS – SURFACE WATER AND GROUNDWATER

A. Monitoring Location RSW-001

1. The Permittee shall monitor the Pacific Ocean at Monitoring Location RSW-001 as follows:

Table E-6. Receiving Water Monitoring – Monitoring Location RSW-001

Parameter	Units	Sample Type	Minimum Sampling Frequency	Required Analytical Test Method[1]
Fecal Coliform Bacteria[2]	MPN/100 mL	Grab	Weekly	Standard Methods
Total Coliform Bacteria[2]	MPN/100 mL	Grab	Weekly	Standard Methods
Enterococcus Bacteria[3]	MPN/100 mL	Grab	Weekly	Standard Methods

Table Notes:
1. In accordance with the current edition of Standard Methods for Examination of Water and Wastewater (American Public Health Administration) or current test procedures specified in 40 C.F.R. part 136.
2. Detection methods used for coliforms (total and fecal) shall be those presented in Table 1A of 40 CFR Part 136, unless alternate methods have been approved in advance by U.S. EPA pursuant to 40 CFR Part 136.
3. Detection methods used for enterococcus shall be those presented in EPA publication EPA 600/4-85/076, *Test Methods for Escherichia coli and Enterococci in Water By Membrane Filter Procedure*, or any improved method determined by the Regional Water Board to be appropriate.

2. The geometric mean shall be calculated using the five most recent sample results for comparison with the 30-day geometric mean receiving water limitations in section V.A.1.i(a) of this Order.

DRAFT

3. If a single sample exceeds any of the single sample maximum receiving water limitations in section V.A.1.i(b) of this Order, the Permittee shall conduct repeat sampling at that location to determine the extent and persistence of the exceedance. Repeat sampling shall be conducted within 24 hours of receiving analytical results and continued every 24 hours until the sample result is less than the single sample maximum receiving water limitation or until a sanitary survey is conducted to determine the source of the high bacterial densities,

   When repeat sampling is required because of an exceedance of any one single sample density, values from all samples collected during that 30-day period will be used to calculate the geometric mean.

B. Groundwater Monitoring – Not Required

This Order does not require groundwater monitoring at this time.

IX. OTHER MONITORING REQUIREMENTS

A. Outfall Inspection

The Permittee shall visually inspect the outfall structure annually, by **November 1**, to verify the operational status of the outfall and document the inspection with photographs showing the condition of the outfall structure. A report documenting outfall condition and maintenance, including any observed cracks, breaks, malfunctions, and appropriate repairs, shall be submitted with the annual report due by **March 1** each year.

B. Biological Survey

The Permittee shall conduct a comparative evaluation of indigenous biota in the vicinity of the outfall and a reference station outside the influence of the discharge using a qualified aquatic biologist at least once every 5 years. The biologist shall prepare a report that includes a photographic survey of the intertidal flora and fauna and observations of objectionable aquatic growths, floating particulates or grease and oil, aesthetically undesirable discoloration of the ocean surface, color of fish or shellfish, and any evidence of degradation of indigenous biota attributable to the rate of deposition of inert solids, settleable material, nutrient materials, increased concentrations of organic materials, or increased concentrations of Ocean Plan Table 1 substances. The Permittee shall submit to the Regional Water Board Executive Officer for approval a Biological Survey Work Plan no later than **October 1, 2018,** in order to complete the survey and prepare a final report by the due date for receipt of an application for permit renewal. The final report shall be submitted no later than **April 1, 2021**.

C. Filtration Process Monitoring (Monitoring Locations INT-001A and INT-001B)

Filtration process monitoring shall demonstrate compliance with section IV.D.1 (Filtration Process Requirements) of the Order and applies to discharges to the recycled water system. The Permittee is required to implement the following filtration process monitoring:

1. Effluent Filter Monitoring (Monitoring Location INT-001A)

a. **Monitoring.** The Permittee shall calculate on a daily basis the surface loading rate in gallons per minute per square meter and report the maximum surface loading rate and any exceedances of the surface loading rate limitations specified in section IV.D.1.a of the Order. The rate of flow through the tertiary filters shall be measured at Monitoring Location INT-001A).

b. **Compliance.** Compliance with the maximum daily filter surface loading rate, as specified in section 60301.320 of the CCR Water Recycling Criteria (title 22), shall be calculated based on the flow rate through each filter unit.

DRAFT

c. **Reporting.** The maximum daily filter surface loading rate shall be reported on the monthly SMR.

2. **Effluent Filter Monitoring (Monitoring Location INT-001B)**

a. **Monitoring.** The turbidity of the filtered effluent shall be continuously measured and recorded at Monitoring Location INT-001B. Should the turbidity meter and recorder fail, grab sampling at a minimum frequency of 1.2 hours may be substituted for a period of up to 24 hours. The recorded data shall be maintained by the Permittee for at least 3 years. The daily maximum and 95th percentile turbidity results shall be reported on the monthly SMRs.

b. **Compliance.** Compliance with the effluent turbidity limitation specified in title 22, as referenced in section IV.D.1.b of the Order, shall be determined using the levels of recorded turbidity taken at intervals of no more than 1.2 hours over a 24-hour period.

c. **Reporting.** If the filtered effluent turbidity exceeds 0.2 NTU for more than 5 percent of the time in a 24-hour period or 0.5 NTU at any time, the incident shall be reported in the monthly SMR and to the Regional Water Board and DDW by telephone within 24 hours in accordance with Provision VI.A.2.b of the Order, only if the effluent was sent to the recycled water system. A written report describing the incident and the actions undertaken in response shall be included in the monthly SMR. Mitigation of the event shall consist of diverting all inadequately treated wastewater to temporary storage or an upstream process or automatically activated chemical addition to comply with title 22 requirements (sections 60304 and 60307).

D. Disinfection Process Monitoring (Monitoring Location INT-002)

Disinfection process monitoring shall demonstrate compliance with section IV.D.2 (Disinfection Process Requirements) of the Order and applies to discharges to the recycled water system. The Permittee is required to implement the following disinfection process monitoring:

1. **Monitoring Location INT-002**

a. **Monitoring.** The UV transmittance of the effluent from the UV disinfection system shall be monitored continuously and recorded at Monitoring Location INT-002. The operational UV dose shall be calculated from UV transmittance and flow.

b. **Compliance.** The UV transmittance shall not fall below 65 percent of maximum at any time, unless otherwise approved by DDW. The operational UV dose shall not fall below 80 millijoules per square centimeter (mJ/cm^2) at any time, unless otherwise approved by DDW. Flow through the UV disinfection system shall not exceed 0.6 mgd, unless otherwise approved by DDW.

c. **Reporting.** The Permittee shall report daily average and lowest daily transmittance and operational UV dose on its monthly SMRs. The Permittee shall report daily average and maximum flow through the UV disinfection system. If the UV transmittance falls below 65 percent or UV dose falls below 80 mJ/cm^2, the event shall be reported to the Regional Water Board by telephone within 24 hours. Any inadequately treated and disinfected wastewater shall be diverted to a storage basin or an upstream process for adequate treatment.

E. Sludge Monitoring (Monitoring Location BIO-001)

1. Sludge sampling shall be conducted according to the requirements specified by the location and type of disposal activities undertaken.

DRAFT

2. Sludge shall be sampled annually for those pollutants U.S. EPA has identified under section 307(a) of the CWA and referenced in section 401.15 of 40 C.F.R. Sludge shall be sampled during the same 24-hour period as influent and effluent sampling analysis and sampled for pollutants specified in CWA section 307(a)(1) and referenced in section 401.15 of 40 C.F.R.. The sludge analyzed shall be a composite sample of a minimum of 12 discrete samples taken at equal time intervals over the 24-hour period. Sampling and analysis shall be performed in accordance with the techniques prescribed in 40 C.F.R. part 136 and amendments thereto.

3. Sampling records shall be retained for a minimum of 5 years. A log shall be maintained for sludge quantities generated and of handling and disposal activities. The frequency of entries is discretionary, however, the log must be complete enough to serve as a basis for developing the Sludge Handling and Disposal report that is required as part of the Annual Report.

F. Septage Station Monitoring (Monitoring Location SEP-001)

1. Monitoring Location SEP-001

a. For each septage load delivered to the Facility, the Permittee shall require the hauler to collect and report a pH value representative of the load.

b. The Permittee shall estimate, prior to the beginning of a quarterly and semiannual monitoring period, the number of anticipated septage deliveries for the given monitoring frequency, and generate a random load number from this total. When the delivery corresponding to the pre-chosen random number is received, the Permittee will collect a representative septage sample and have the samples analyzed in accordance with Table E-8 and with standard sample collection and handling procedures. Each sample analyzed in accordance with the following table.

Table E-7. Septage Monitoring – Monitoring Location SEP-001

Parameter	Units	Sample Type	Minimum Sampling Frequency	Required Analytical Test Method[1]
pH	s.u.	Grab	Weekly	Standard Methods
Biochemical Oxygen Demand	mg/L	Grab	Quarterly	Standard Methods
Chemical Oxygen Demand	mg/L	Grab	Quarterly	Standard Methods
Oil and Grease	mg/L	Grab	Quarterly	Standard Methods
Metals and Trace Elements	µg/L	Grab	Quarterly	Standard Methods
Purgeable Organic Compounds[2]	µg/L	Grab	Semiannually	Standard Methods
Semivolatile Organic Compounds[3]	µg/L	Grab	Semiannually	Standard Methods

Table Notes:
1. In accordance with the current edition of *Standard Methods for Examination of Water and Wastewater* (American Public Health Administration) or current test procedures specified in 40 C.F.R. part 136.
2. Purgeable organic compounds shall include the parameters listed in U.S. EPA Method 624.
3. Semivolatile organic compounds shall include the parameters listed in U.S. EPA Method 625.

DRAFT

2. **Septage Hauler Tracking**

a. For any month when septage waste is received by the Facility, the source(s) of the waste shall be documented. A summary table of all septage discharged to the Facility shall be submitted with each quarterly SMR and shall include:

i. Date and time of discharge;

ii. Name, County identification number, and City identification number of the hauler;

iii. Volume discharged;

iv. Source(s) of the waste; and

v. pH of septage load.

X. REPORTING REQUIREMENTS

A. General Monitoring and Reporting Requirements

1. The Permittee shall comply with all Standard Provisions (Attachment D) related to monitoring, reporting, and recordkeeping.

B. Self-Monitoring Reports (SMRs)

1. The Permittee shall submit electronic Self-Monitoring Reports (eSMRs) using the State Water Board's California Integrated Water Quality System (CIWQS) Program Web site (http://www.waterboards.ca.gov/ciwqs/index.html). The CIWQS Web site will provide additional directions for SMR submittal in the event there will be service interruption for electronic submittal. The Permittee shall maintain sufficient staffing and resources to ensure it submits eSMRs that are complete and timely. This includes provision of training and supervision of individuals (e.g., Permittee personnel or consultant) on how to prepare and submit eSMRs.

2. The Permittee shall report in the SMR the results for all monitoring specified in this MRP under sections III through IX. The Permittee shall submit quarterly SMRs including the results of all required monitoring using U.S. EPA-approved test methods or other test methods specified in this Order. SMRs are to include all new monitoring results obtained since the last SMR was submitted. If the Permittee monitors any pollutant more frequently than required by this Order, the results of this monitoring shall be included in the calculations and reporting of the data submitted in the SMR.

3. All monitoring results reported shall be supported by the inclusion of the complete analytical report from the laboratory that conducted the analyses.

4. Monitoring periods and reporting for all required monitoring shall be completed according to the following schedule:

Table E-8. Monitoring Periods and Reporting Schedule

Sampling Frequency	Monitoring Period Begins On…	Monitoring Period	SMR Due Date
Continuous	Permit effective date	All	First day of second calendar month following the end of each quarter (February 1, May 1, August 1, November 1)

DRAFT

Sampling Frequency	Monitoring Period Begins On…	Monitoring Period	SMR Due Date
Daily	Permit effective date	(Midnight through 11:59 PM) or any 24-hour period that reasonably represents a calendar day for purposes of sampling	First day of second calendar month following the end of each quarter (February 1, May 1, August 1, November 1)
Weekly	Sunday following permit effective date or on permit effective date if on a Sunday	Sunday through Saturday	First day of second calendar month following the end of each quarter (February 1, May 1, August 1, November 1)
Monthly	First day of calendar month following permit effective date or on permit effective date if that date is first day of the month	First day of calendar month through last day of calendar month	First day of second calendar month following the end of each quarter (February 1, May 1, August 1, November 1)
Quarterly	First day of calendar quarter following permit effective date or on permit effective date if that date is first day of the month	January 1 through March 31 April 1 through June 30 July 1 through September 30 October 1 through December 31	First day of second calendar month following the end of each quarter (February 1, May 1, August 1, November 1)
Semiannually	Closest of January 1 or July 1 following (or on) permit effective date	January 1 through June 30 July 1 through December 31	September 1, each year March 1, each year
Annually	January 1 following (or on) permit effective date	January 1 through December 31	March 1, each year (with annual report)
Once per permit term	Permit effective date	All	March 1, 2018

Table Note:

1. Quarterly monitoring periods are as follows: January 1 through March 31; April 1 through June 30; July 1 through September 30; and October 1 through December 31.

5. **Reporting Protocols.** The Permittee shall report with each sample result the applicable ML, the RL, and the current Method Detection Limit (MDL), as determined by the procedure in 40 C.F.R. part 136.

   The Permittee shall report the results of analytical determinations for the presence of chemical constituents in a sample using the following reporting protocols:

   a. Sample results greater than or equal to the reported ML shall be reported as measured by the laboratory (i.e., the measured chemical concentration in the sample).

   b. Sample results less than the reported ML, but greater than or equal to the laboratory's MDL, shall be reported as "Detected, but Not Quantified," or DNQ. The estimated chemical concentration of the sample shall also be reported.

   For the purposes of data collection, the laboratory shall write the estimated chemical concentration next to DNQ as well as the words "Estimated Concentration" (may be shortened to "Est. Conc."). The laboratory may, if such information is available, include numerical estimates of the data quality for the reported result. Numerical estimates of data quality may be percent accuracy (± a percentage of the reported value), numerical ranges (low to high), or any other means considered appropriate by the laboratory.

DRAFT

c. Sample results less than the laboratory's MDL shall be reported as "Not Detected," or ND.

d. The Permittee is to instruct laboratories to establish calibration standards so that the ML value (or its equivalent if there is differential treatment of samples relative to calibration standards) is the lowest calibration standard. At no time is the Permittee to use analytical data derived from extrapolation beyond the lowest point of the calibration curve.

6. The Permittee shall submit SMRs in accordance with the following requirements:

a. The Permittee shall arrange all reported data in a tabular format. The data shall be summarized to clearly illustrate whether the facility is operating in compliance with interim and/or final effluent limitations. The reported data shall include calculation of all effluent limitations that require averaging, taking of a median, or other computation. The Permittee is not required to duplicate the submittal of data that is entered in a tabular format within CIWQS. When electronic submittal of data is required and CIWQS does not provide for entry into a tabular format within the system, the Permittee shall electronically submit the data in a tabular format as an attachment.

b. The Permittee shall attach a cover letter to the SMR. The information contained in the cover letter shall clearly identify:

i. Facility name and address;

ii. WDID number;

iii. Applicable period of monitoring and reporting;

iv. Violations of the waste discharge requirements (identified violations must include a description of the requirement that was violated and a description of the violation);

v. Corrective actions taken or planned; and

vi. The proposed time schedule for corrective actions.

c. SMRs must be submitted to the Regional Water Board, signed and certified as required by the Standard Provisions (Attachment D), to the CIWQS Program Web site (http://www.waterboards.ca.gov/ciwqs/index.html). In the event that that an alternate method for submittal of SMRs is required, the Permittee shall submit the SMR electronically via e-mail to NorthCoast@waterboards.ca.gov or on disk (CD or DVD) in Portable Document Format (PDF) file in lieu of paper-sourced documents. The guidelines for electronic submittal of documents can be found on the Regional Water Board website at http://www.waterboards.ca.gov/northcoast.

C. Discharge Monitoring Reports (DMRs)

1. DMRs are U.S. EPA reporting requirements. The Permittee shall electronically certify and submit DMRs together with SMRs using Electronic Self-Monitoring Reports module eSMR 2.5 or any upgraded version. DMRs shall be submitted quarterly on the first day of the second calendar month following the end of each quarter (February 1, May 1, August 1, November 1). Electronic DMR submittal shall be in addition to electronic SMR submittal. Information about electronic submittal of DMRs is available at the Discharge Monitoring Report web site at: http://www.waterboards.ca.gov/water_issues/programs/discharge_monitoring/.

DRAFT

D. Other Reports

1. **Special Study Reports and Progress Reports.** As specified in the Special Provisions contained in section VI of the Order and in the MRP, special study and progress reports shall be submitted in accordance with the following reporting requirements.

Table E-7. Reporting Requirements for Special Provisions Reports

Order Section	Special Provision Requirement	Reporting Requirements
Special Provision VI.C.2.a	Effluent Discharge Evaluation Work Plan	**October 1, 2017**
Special Provision VI.C.2.b.i	Source Control and Pretreatment Studies, Local Limits Evaluation	**August 1, 2017**
Special Provision VI.C.2.b.ii	Source Control and Pretreatment Studies, Updated Sewer Use Ordinance Report	**July 1, 2019**
Special Provision VI.C.2.b.ii	Source Control and Pretreatment Studies, Updated Sewer Use Ordinance	**July 1, 2021**
Special Provision VI.C.2.c	Climate Change Readiness Study Plan	**April 1, 2021**
Special Provision VI.C.3.a.i	Pollutant Minimization Program	If required by the Executive Officer
Special Provision VI.C.3.a.ii(e)	Pollutant Minimization Program, Annual Facility Report	**March 1**, annually, following development of Pollutant Minimization Program
Special Provision VI.C.4.c.i	Septage Management Plan	Prior to accepting septage
Special Provision VI.C.5.e	Adequate Capacity, Technical Report	**Within 120 days** of notification that the Facility will reach capacity within 4 years
MRP section V.B.1	TRE Work Plan Revisions	As necessary
MRP section V.B.2	Detailed TRE Work Plan	**Within 30 days** of an accelerated monitoring test that results in "Fail"
MRP section IX.A	Outfall Inspection Report	With Annual Report by **March 1** each year
MRP section IX.B	Biological Survey Work Plan	**October 1, 2018**
MRP section IX.B	Biological Survey Final Report	**April 1, 2021**
MRP section X.D.2	Annual Report	**March 1,** each year
MRP section X.D.3	Annual Pretreatment Report	**March 1,** each year
MRP section X.E	Spills and Unauthorized Discharge Reporting	**Within 24 hours,** verbal notification **Within 5 days,** written report

2. **Annual Report.** The Permittee shall submit an annual report to the Regional Water Board for each calendar year through the CIWQS Program Web site. In the event that a paper copy of the annual report is required, the Permittee shall submit the report to the email address in section X.B.6.c., above. The report shall be submitted by March 1 of the following year. The report shall, at a minimum, include the following:

   a. Where appropriate, tabular and/or graphical summaries of the monitoring data and disposal records from the previous year. If the Permittee monitors any pollutant more frequently than required by this Order, using test procedures approved under 40 C.F.R. part 136 or as specified in this Order, the results of this monitoring shall be included in the calculation and report of the data submitted SMR.

DRAFT

b. A comprehensive discussion of the Facility's compliance (or lack thereof) with all effluent limitations and other WDRs, and the corrective actions taken or planned, which may be needed to bring the discharge into full compliance with the Order.

c. The names and general responsibilities of all persons employed at the Facility;

d. The names and telephone numbers of persons to contact regarding the Facility for emergency and routine situations; and

e. A statement certifying when the flow meter(s) and other monitoring instruments and devices were last calibrated, including identification of who performed the calibration.

f. **Sludge Handling and Disposal Activity Reporting.** The Permittee shall submit, as part of its annual report to the Regional Water Board, a description of the Permittee's solids handling, disposal and reuse activities over the previous 12 months. At a minimum, the report shall contain:

i. Annual sludge production, in dry tons and percent solids;

ii. Sludge monitoring results;

iii. A schematic diagram showing sludge handling facilities (e.g., digesters, thickeners, drying beds, etc.), if any and a solids flow diagram;

iv. Methods of final disposal of sludge:

(a) For any portion of sludge discharged to a sanitary landfill, the Permittee shall provide the volume of sludge transported to the landfill, the names and locations of the facilities receiving sludge, the Regional Water Board's WDRs order number for the regulated landfill, and the landfill classification.

(b) For any portion of sludge discharged through land application, the Permittee shall provide the volume of biosolids applied, the date and locations where biosolids were applied, the Regional Water Board's WDRs order number for the regulated discharge, a demonstration that the discharge was conducted in compliance with applicable permits and regulations, and, if applicable, corrective actions taken or planned to bring the discharge into compliance with WDRs.

(c) For any portion of sludge further treated through composting, the Permittee shall provide a summary of the composting process, the volume of sludge composted, and a demonstration and signed certification statement that the composting process and final product met all requirements for Class A biosolids.

v. Results of internal or external third-party audits of the Biosolids Management System, including reported program deficiencies and recommendations, required corrective actions, and a schedule to complete corrective actions.

g. **Storm Water Reporting.** The Permittee shall submit, as part of its annual report to the Regional Water Board, an evaluation of the effectiveness of the Permittee's BMPs to control the run-on of storm water to the treatment facility site, as well as activities to maintain and upgrade these BMPs.

h. **Septage Monitoring and Reporting.** The results of septage monitoring shall be provided as follows:

i. A narrative description of all preparatory, monitoring, sampling, and analytical testing activities for the septage monitoring program. The narrative shall be

DRAFT

sufficiently detailed to verify compliance with waste discharge requirements and this MRP.

ii. A summary table of all discharges of septage to the Facility. At a minimum, the table shall include; the name, County identification number, and City identification number of each hauler discharging into the Facility over the past calendar year.

iii. A summary table of analytical results for all samples of septage collected in compliance with waste discharge requirements and this MRP. When directed by the Regional Water Board, the Permittee shall also append analytical reports, chains of custody, and other documentation necessary to confirm the validity of the monitoring samples.

i. **DMR-QA Study Report. .** The Permittee shall submit, as part of its annual report to the Regional Water Board, an electronic copy of the annual DMR-QA study report submitted to the State Water Board, Quality Assurance Program Officer pursuant to section I.F of this MRP.

3. **Annual Pretreatment Reporting Requirements.** The Permittee shall submit annually a report to the Regional Water Board, with copies to U.S. EPA Region 9 and the State Water Board, describing the Permittee's pretreatment activities over the previous calendar year. In the event that the Permittee is not in compliance with any conditions or requirements of this Order, including noncompliance with pretreatment audit/compliance inspection requirements, then the Permittee shall also include the reasons for noncompliance and state how and when the Permittee shall comply with such conditions and requirements.

An annual report shall be submitted by March 1st of the following year, and include at least the following items:

a. A summary of analytical results from all influent, effluent, and sludge sampling conducted during the reporting period, as specified in sections III.A.1 (Table E-3), IV.A.1 (Table E-4), and IX.E.2 of the MRP. The Permittee shall also report results of any influent, effluent, or sludge monitoring data for nonpriority pollutants which may be causing or contributing to interference, pass-through or adversely impacting sludge quality.

b. A discussion of Upset, Interference, or Pass-Through incidents, if any, at the treatment plant, which the Permittee knows or suspects were caused by industrial users of the POTW or receipt of septage or other incompatible wastes. The discussion shall include the reasons why the incidents occurred, the corrective actions taken and, if known, the name and address of, the industrial user(s) responsible. The discussion shall also include a review of the applicable pollutant limitations to determine whether any additional limitations, or changes to existing requirements, may be necessary to prevent Pass-Through, Interference, or noncompliance with sludge disposal requirements.

c. The cumulative number of industrial users that the Permittee has notified regarding Baseline Monitoring Reports and the cumulative number of industrial user responses.

d. An updated list of the Permittee's industrial users including their names and addresses, or a list of deletions and additions keyed to a previously submitted list. The Permittee shall provide a brief explanation for each deletion. The list shall identify the industrial users subject to federal categorical standards by specifying which set(s) of standards are applicable. The list shall indicate which categorical industries, or specific pollutants from each industry, are subject to local limitations that are more stringent than the

DRAFT

federal categorical standards. The Permittee shall also list the noncategorical industrial users that are subject only to local discharge limitations.

e. The Permittee shall characterize the compliance status through the year of record of each industrial user by employing the following descriptions:

i. complied with baseline monitoring report requirements (where applicable);

ii. consistently achieved compliance;

iii. inconsistently achieved compliance;

iv. significantly violated applicable pretreatment requirements as defined by 40 C.F.R. section 403.8(f)(2)(vii);

v. complied with schedule to achieve compliance (include the date final compliance is required);

vi. did not achieve compliance and not on a compliance schedule; and

vii. compliance status unknown.

f. A summary of the inspection and sampling activities conducted by the Permittee during the past year to gather information and data regarding the industrial users. The summary shall include:

i. The names and addresses of the industrial users subjected to surveillance and an explanation of whether they were inspected, sampled, or both and the frequency of these activities at each user; and

ii. The conclusions or results from the inspection or sampling of each industrial user.

g. A summary of the compliance and enforcement activities during the past year. The summary shall include the names and addresses of the industrial users affected by the following actions:

i. Warning letters or notices of violation regarding the industrial users' apparent noncompliance with federal categorical standards or local discharge limitations. For each industrial user, identify whether the apparent violation concerned the federal categorical standards or local discharge limitations.

ii. Administrative orders regarding the industrial users noncompliance with federal categorical standards or local discharge limitations. For each industrial user, identify whether the violation concerned the federal categorical standards or local discharge limitations.

iii. Civil actions regarding the industrial users' noncompliance with federal categorical standards or local discharge limitations. For each industrial user, identify whether the violation concerned the federal categorical standards or local discharge limitations.

iv. Criminal actions regarding the industrial users' noncompliance with federal categorical standards or local discharge limitations. For each industrial user, identify whether the violation concerned the federal categorical standards or local discharge limitations.

v. Assessment of monetary penalties. For each industrial user identify the amount of the penalties.

vi. Restriction of flow to the POTW.

DRAFT

vii. Disconnection from discharge to the POTW.

h. A description of any significant changes in operating the pretreatment program which differ from the information in the Permittee's approved Pretreatment Program including, but not limited to, changes concerning: the program's administrative structure, local industrial discharge limitations, monitoring program or monitoring frequencies, legal authority or enforcement policy, funding mechanisms, resource requirements, or staffing levels.

i. A summary of the annual pretreatment budget, including the cost of pretreatment program functions and equipment purchases.

j. A summary of public participation activities to involve and inform the public.

k. A brief description of any programs the POTW implements to reduce pollutants from nondomestic users that are not classified as SIUs; and

l. In the event that the Permittee is not in compliance with any conditions or requirements of this permit affected by the pretreatment program, including any noncompliance with pretreatment audit or compliance inspection requirements, then the Permittee shall also include the reasons for noncompliance and state how and when the Permittee will comply with such conditions and requirements.

Duplicate signed copies of these Pretreatment Program reports shall be submitted to the North Coast Regional Water Board at NorthCoast@waterboards.ca.gov, U.S. EPA Region 9 at R9Pretreatment@epa.gov, and the State Water Board at the appropriate address below:

STANDARD MAIL	FEDEX/UPS/OTHER PRIVATE CARRIERS
State Water Resources Control Board Division of Water Quality c/o Discharge Monitoring Report Processing Center Post Office Box 100 Sacramento, CA 95812-1000	State Water Resources Control Board Division of Water Quality c/o DMR Processing Center 1001 I Street, 15th Floor Sacramento, CA 95814

E. Spill Notification

1. Spills and Unauthorized Discharges. Information regarding all spills and unauthorized discharges (except SSOs and recycled water) that may endanger health or the environment shall be provided orally to the Regional Water Board[1] within 24 hours from the time the Permittee becomes aware of the circumstances and a written report shall also be provided within five (5) days of the time the Permittee becomes aware of the circumstances, in accordance with Section V.E of Attachment D.

Information to be provided verbally to the Regional Water Board includes:

a. Name and contact information of caller;

b. Date, time, and location of spill occurrence;

c. Estimates of spill volume, rate of flow, and spill duration, if available and reasonably accurate;

d. Surface water bodies impacted, if any;

e. Cause of spill, if known at the time of the notification;

[1] The contact number of the Regional Water Board during normal business hours is (707) 576-2220. After normal business hours, spill reporting to the California Governor's Office of Emergency Services Warning Center (CalOES) will satisfy the 24 hour spill reporting requirement for the Regional Water Board. The contact number for spill reporting for the CalOES is (800) 852-7550.

DRAFT

f. Cleanup actions taken or repairs made at the time of the notification; and

g. Responding agencies.

2. **Sanitary Sewer Overflows.** Notification and reporting of sanitary sewer overflows is conducted in accordance with the requirements of Order No. 2006-0003-DWQ (Statewide General WDRs for Sanitary Sewer Systems), which is not incorporated herein by reference, and any revisions thereto.

3. **Recycled Water Spills.** Notification and reporting of spills and unauthorized discharges of recycled water discharged in or on any waters of the state, as defined in Water Code section 13050, shall be conducted in accordance with the following:

   a. Tertiary Recycled Water[2]

   i. For unauthorized discharges of 50,000 gallons or more of tertiary recycled water, the Permittee shall immediately notify the Regional Water Board as soon as (a) the Permittee has knowledge of the discharge or probable discharge, (b) notification is possible, and (c) notification can be provided without substantially impeding cleanup or other emergency measures.

   ii. For unauthorized discharges of more than 1,000 gallons, but less than 50,000 gallons of tertiary recycled water, the Permittee shall notify the Regional Water Board as soon as possible, but no longer than 3 days after becoming aware of the discharge.

DRAFT

[2] Tertiary Recycled Water means "disinfected tertiary 2.2 recycled water" as defined by DDW or wastewater receiving advanced treatment beyond disinfected tertiary 2.2 recycled water.

ATTACHMENT F – FACT SHEET

Contents

I. Permit Information F-3
II. Facility Description F-4
  A. Description of Wastewater and Biosolids Treatment and Controls F-4
  B. Discharge Points and Receiving Waters F-5
  C. Summary of Existing Requirements and Self-Monitoring Report (SMR) Data F-5
  D. Compliance Summary F-6
  E. Planned Changes F-7
III. Applicable Plans, Policies, and Regulations F-7
  A. Legal Authorities F-7
  B. California Environmental Quality Act (CEQA) F-7
  C. State and Federal Laws, Regulations, Policies, and Plans F-7
  D. Impaired Water Bodies on the CWA section 303(d) List F-10
  E. Other Plans, Policies and Regulations F-10
IV. Rationale for Effluent Limitations and Discharge Specifications F-10
  A. Discharge Prohibitions F-11
  B. Technology-Based Effluent Limitations F-14
  C. Water Quality-Based Effluent Limitations (WQBELs) F-17
  D. Final Effluent Limitation Considerations F-30
  E. Interim Effluent Limitations – Not Applicable F-31
  F. Land Discharge Specifications and Requirements – Not Applicable F-31
  G. Recycling Specifications F-31
V. Rationale for Receiving Water Limitations F-35
  A. Surface Water F-35
  B. Groundwater F-35
VI. Rationale for Provisions F-35
  A. Standard Provisions F-35
  B. Special Provisions F-36
VII. Rationale for Monitoring and Reporting Requirements F-40
  A. Influent Monitoring F-40
  B. Effluent Monitoring F-41
  C. Whole Effluent Toxicity Testing Requirements F-42
  D. Recycling Monitoring Requirements F-42
  E. Receiving Water Monitoring F-42
  F. Groundwater Discharge Monitoring Requirements – Not Applicable F-42
  G. Other Monitoring Requirements F-43
  H. Reporting Requirements F-44
VIII. Public Participation F-44
  A. Notification of Interested Parties F-44
  B. Written Comments F-44
  C. Public Hearing F-44
  D. Waste Discharge Requirements Petitions F-45
  E. Information and Copying F-45
  F. Register of Interested Persons F-45
  G. Additional Information F-45

Tables

DRAFT

Table F-1. Facility Information F-3
Table F-2. Historic Effluent Limitations and Monitoring Data – Discharge Point 001 ..... F-5
Table F-3. Basin Plan Beneficial Uses F-8
Table F-4. Ocean Plan Beneficial Uses F-9
Table F-5. Summary of Reasonable Potential Analysis Results F-20
Table F-6. Background Seawater Concentrations – Ocean Plan F-25
Table F-7. Water Quality Objectives – Ocean Plan F-25
Table F-8. Summary of Chronic Toxicity Results (TUc) F-26
Table F-9. Summary of Chronic Toxicity Results (TST Approach) F-29
Attachment F-1 – City of Crescent City, Wastewater Treatment Facility RPA Summary F-1

DRAFT

ATTACHMENT F – FACT SHEET

As described in section I, the Regional Water Board incorporates this Fact Sheet as findings of the Regional Water Board supporting the issuance of this Order. This Fact Sheet includes the legal requirements and technical rationale that serve as the basis for the requirements of this Order.

This Order has been prepared under a standardized format to accommodate a broad range of discharge requirements for dischargers in California. Only those sections or subsections of this Order that are specifically identified as "not applicable" have been determined not to apply to this Permittee. Sections or subsections of this Order not specifically identified as "not applicable" are fully applicable to this Permittee.

I. PERMIT INFORMATION

The following table summarizes administrative information related to the facility.

Table F-1. Facility Information

WDID	1A84006ODN
Permittee	City of Crescent City
Name of Facility	Wastewater Treatment Facility
Facility Address	210 Battery Street Crescent City, CA 95531 Del Norte County
Facility Contact, Title and Phone	David Vandermark, City Manager, (707) 464-7483
Authorized Person to Sign and Submit Reports	David Vandermark, City Manager, (707) 464-7483
Mailing Address	377 J Street, Crescent City, CA 95531
Billing Address	Same as Mailing Address
Type of Facility	Publicly Owned Treatment Works (POTW)
Major or Minor Facility	Major
Threat to Water Quality	1
Complexity	A
Pretreatment Program	Yes
Recycling Requirements	Yes
Facility Permitted Flow	1.86 million gallons per day (mgd) (average dry weather flow) 6.12 mgd (peak wet weather flow)
Facility Design Flow	1.86 mgd (average dry weather treatment capacity) 6.12 mgd (average wet weather treatment capacity)
Watershed	Smith River Hydrologic Unit
Receiving Water	Pacific Ocean
Receiving Water Type	Ocean Waters

A. The City of Crescent City (hereinafter Permittee) is the owner and operator of the Crescent City Wastewater Treatment Facility (hereinafter Facility), a POTW.

For the purposes of this Order, references to the "discharger" or "permittee" in applicable federal and state laws, regulations, plans, or policy are held to be equivalent to references to the Permittee herein.

The Permittee is authorized to discharge subject to waste discharge requirements in this Order at the discharge locations described in Table 2 on the cover page of this Order. The Code of Federal Regulations at 40 C.F.R. section 122.46 limits the duration of National Pollutant Discharge Elimination System (NPDES) permits to be effective for a fixed term not to exceed five years. Accordingly, Table 3 of this Order limits the effective period for the discharge authorized by this Order. Pursuant to California Code of Regulations (CCR), title 23, section 2235.4, the terms and

conditions of an expired permit are automatically continued pending issuance of a new permit if all requirements of the federal NPDES regulations on continuation of expired permits are complied with.

B. The Facility discharges secondary treated wastewater to the Pacific Ocean, a water of the United States. The Permittee was previously regulated by Order No. R1-2011-0019 and NPDES Permit No. CA0022756 adopted on June 22, 2011, and expired on June 29, 2016. The terms and conditions of the current Order and MRP have been automatically continued and remain in effect until new Waste Discharge Requirements (WDRs) and NPDES permit are adopted pursuant to this Order. Attachment B provides a map of the area around the Facility. Attachment C provides a flow schematic of the Facility.

C. The Permittee filed a report of waste discharge (ROWD) and submitted an application for reissuance of its WDRs and NPDES permit on December 23, 2015. Supplemental information was submitted on January 29, 2016, and March 28, 2016. The application was deemed complete on March 28, 2016.

II. FACILITY DESCRIPTION

The Permittee owns and operates a municipal wastewater treatment facility (WWTF) and associated wastewater disposal facility that serve a population of approximately 17,620 within Crescent City and the surrounding County Service Area (CSA). The CSA has two sub-areas: the Northwest area to the north of the City and the Bertsch Ocean View area to the east of the City.

A. Description of Wastewater and Biosolids Treatment and Controls

The Facility treats domestic, commercial, and industrial wastewater and has an average dry weather design treatment capacity of 1.86 mgd and a peak wet weather flow capacity of 6.12 mgd. The Permittee has one significant industrial user (Rumiano Cheese Company) that is covered under a pretreatment permit to discharge to the Facility.

The Permittee and CSA each maintain a separate sanitary sewer collection system within the service area. Flows generated within the CSA are collected and conveyed in the CSA's satellite collection system to the limits of the Permittee's system. The Permittee's system then conveys combined City and County-generated flows to the Facility, which is owned and maintained by the Permittee.

The headworks includes a mechanically cleaned screen, a flow-measuring Parshall flume, and a wet well in which five pumps are available to lift the flow to the primary clarifiers. Primary treatment consists of two grit removal tanks followed by two rectangular primary clarifiers. Secondary treatment is provided by operating the rotating biological contactors (RBC) and membrane bioreactor (MBR) in parallel. The RBC system consists of three trains of four-stage, RBCs with a combined surface area of 1.2 million square feet. Flow from the RBCs reach three rectangular secondary clarifiers. Flows from the clarifiers and any flow from the MBR unit that is not used for recycled water use are commingled and disinfected using sodium hypochlorite and dechlorinated using sodium bisulfite prior to discharge to the Pacific Ocean at Discharge Point 001.

The Permittee has the capability of producing tertiary-2.2 recycled water utilizing flow from the MBR and an ultraviolet (UV) light disinfection system that was installed in 2010. The Permittee does not currently have any recycled water use sites, but may produce recycled water in the future if recycled water use sites are identified. The capacity of the recycled water system is 1.2 mgd; however, the MBR can treat up to 1.6 mgd.

Solids handling consists of gravity thickening primary sludge, rotary drum thickening of secondary sludge, and anaerobic digestion of thickened solids. Both digesters are heated and mixed. Digested solids are dewatered using a belt filter press and hauled to a landfill.

DRAFT

B. Discharge Points and Receiving Waters

Treated wastewater is discharged at Discharge Point 001 at 41° 44' 38" N latitude and 124° 12' 10" W longitude to the Pacific Ocean. The outfall consists of a 24-inch ductile iron pipe that has an effluent conveyance capacity of 11 mgd to 13 mgd, depending on tide conditions. The outfall structure is sloped downward and discharges into a rocky slot in the surf zone adjacent to Battery Point Lighthouse.

Treated wastewater may also be discharged to the recycled water system at Discharge Point 002.

C. Summary of Existing Requirements and Self-Monitoring Report (SMR) Data

Effluent limitations contained in Order No. R1-2011-0019 for discharges from Discharge Points 001 (Monitoring Location EFF-001) and representative monitoring data from the term of Order No. R1-2011-0019 are as follows:

Table F-2. Historic Effluent Limitations and Monitoring Data – Discharge Point 001

Parameter	Units	Effluent Limitation			Monitoring Data (July 2011 – November 2015)		
		Average Monthly	Average Weekly	Maximum Daily	Highest Average Monthly Discharge	Highest Average Weekly Discharge	Highest Daily Discharge
Biochemical Oxygen Demand 5-day @ 20°C (BOD_5)	mg/L	30	45	--	21.6	28.3	--
	lbs/day[1]	700	1,050	--	298	481	--
	% Removal	75	--	--	87[2]	--	--
Total Suspended Solids (TSS)	mg/L	30	45	--	12.6	28.2	--
	lbs/day[1]	465	700	--	157	401	--
	% Removal	85	--	--	93[2]	--	--
Settleable Solids	ml/L	0.1	--	0.2/3.0[3]	0.1	--	0.5
Oil and Grease	mg/L	25	40	75[3]	<2.5	<2.5	<2.5
	lbs/day[1]	390	620	1,200[3]	<83	<83	<83
Turbidity	NTU	75	100	225[3]	7.2	11.9	25
pH	s.u.	--	--	6.0 – 9.0	--	--	6.7 – 7.8
Ammonia Nitrogen, Total (as N)	mg/L	18[4]	--	72/180[3]	3.6[5]	--	25.5
	lbs/day[2]	280[4]	--	1,100/ 2,800[3]	54.7[5]	--	262.2
Copper Total Recoverable	mg/L	32[4]	--	300/840[3]	25[5]	--	45
	lbs/day[2]	0.50[4]	--	4.7/13[3]	0.36[5]	--	18
Zinc, Total Recoverable	µg/L	370[4]	--	2,200/ 5,800[3]	106[5]	--	203
	lbs/day[2]	5.7[4]	--	34/89[3]	1.3[5]	--	3.19
TCDD Equivalents	µg/L	1.2×10^{-7}	--	--	0.26×10^{-7}	--	--
	lbs/day[2]	1.8×10^{-9}	--	--	0.081×10^{-9}	--	--
Bis(2-ethylhexyl) phthalate	ug/L	110	--	--	17	--	--
	lbs/day[2]	1.6	--	--	0.19	--	--

DRAFT

Parameter	Units	Effluent Limitation			Monitoring Data (July 2011 – November 2015)		
		Average Monthly	Average Weekly	Maximum Daily	Highest Average Monthly Discharge	Highest Average Weekly Discharge	Highest Daily Discharge
Tetrachloro-ethylene	ug/L	60	--	--	<0.95	--	--
	lbs/day[2]	0.93	--	--	<0.0053	--	--
Total Residual Chlorine	mg/L	0.060[4]	--	0.24/1.8[3]	<0.05[5]	--	0.08
	lbs/day[2]	0.93[4]	--	3.7/28[3]	<0.72[5]	--	<5.23
Fecal Coliform Bacteria	MPN/ 100 mL	14[6]	--	43[7]	--	--	1,600

Table Notes:

1. Mass-based effluent limitations for BOD_5 are performance-based, as described in the Fact Sheet (Attachment F) of Order No. R1-2011-0019.
2. Represents the lowest observed percent removal.
3. Represents the instantaneous maximum effluent limitation.
4. Represents the 6-month median effluent limitation.
5. Represents the highest observed 6-month median.
6. The monthly median concentration shall not exceed 14 MPN/100 mL.
7. No more than 10 percent of samples shall exceed 43 MPN/100 mL.

D. Compliance Summary

1. On August 23, 2011, the Executive Officer issued Administrative Civil Liability (ACL) Complaint No. R1-2011-0093 for 62 violations of effluent limitations for 5-day biochemical oxygen demand (BOD_5), ammonia, copper, and fecal coliform organisms in Order No. R1-2006-0001. The ACL Complaint assessed a penalty of $186,000 for these violations. On January 19, 2012, the Executive Officer issued a Settlement Agreement and Stipulation for Entry of ACL Order No. R1-2012-0014 that suspended the ACL of $186,000 pending the completion of a Compliance Project. The Compliance Project consisted of installation of the MBR treatment system.

2. During the term of Order No. R1-2011-0019, the Permittee had 10 effluent limitation violations; 4 total chlorine residual, 3 settleable solids, and 3 fecal coliform violations.

The chlorine residual violations all occurred in September 2015, and the Permittee reported the cause of these violations as follows: "The Membrane Bioreactor (MBR) portion of the effluent produces a fully nitrified effluent and the Rotating Biological Contactor's (RBC's) effluent does not. The RBC effluent plays a critical role in our disinfection process as it contains some ammonium, which is required for the production of chloramines during disinfection. As a result of the recent drought, flows have been at historic lows to the plant resulting in periods during the night that insufficient flow is produced from the RBC's to produce chloramines. This challenge has resulted in the need to make numerous chlorine and bisulfite adjustments which has resulted in more equipment related issues, including air-locked pumps. These issues are the key contributors in the recent high chlorine residual events. We are evaluating long term solutions to address the disinfection challenge associated with periods when ammonia is not present in our effluent and chloramines are not being produced."

The Permittee has further stated that MBR system is capable of removing all settleable solids and that the settleable solids violations are likely due to poor sample collection technique. The Permittee has stated that fecal coliform violations have been addressed through improved operation of the chlorination system.

DRAFT

E. Planned Changes

The Permittee may commence discharges of recycled water if any recycled water use sites are identified during the term of this Order. The Permittee would be required to enroll under State Water Resources Control Board Order WQ 2016-0068-DDW or submit an application for modification of this NPDES permit to address the specific recycled water uses. In addition, the Permittee would need to complete testing of its UV disinfection system to demonstrate that it meets recycled water requirements in section 60301.230 of title 22 of the CCR.

The Permittee is contemplating whether to construct a septage receiving station at the Facility to satisfy the need for local septage disposal. As described in discussions with Regional Water Board staff, septage would be collected and monitored at a septage receiving facility and pumped to the anaerobic digesters for co-treatment with the plant solids or added to the digested solids prior to ultimate disposal at a permitted land disposal site. This Order allows the Permittee to accept septage contingent upon submission and Executive Officer approval of a Septage Management Plan.

No other modifications or operational changes that will cause a material change in the volume or quality of discharges from the Facility have been identified for the term of this Order.

III. APPLICABLE PLANS, POLICIES, AND REGULATIONS

The requirements contained in this Order are based on the requirements and authorities described in this section.

A. Legal Authorities

This Order is issued pursuant to section 402 of the federal Clean Water Act (CWA) and implementing regulations adopted by the U.S. Environmental Protection Agency (U.S. EPA) and chapter 5.5, division 7 of the California Water Code (commencing with section 13370). It shall serve as a NPDES permit authorizing the Permittee to discharge into waters of the U.S. at the discharge location described in Table 2 subject to the WDRs in this Order. This Order also serves as WDRs pursuant to article 4, chapter 4, division 7 of the Water Code (commencing with section 13260).

B. California Environmental Quality Act (CEQA)

Under Water Code section 13389, this action to adopt an NPDES permit is exempt from the provisions of Chapter 3 of CEQA, (commencing with section 21100) of Division 13 of the Public Resources Code.

C. State and Federal Laws, Regulations, Policies, and Plans

1. **Water Quality Control Plan.** The Regional Water Board adopted a *Water Quality Control Plan for the North Coast Region* (hereinafter Basin Plan) that designates beneficial uses, establishes water quality objectives, and contains implementation programs and policies to achieve those objectives for all waters addressed through the plan. In addition, the Basin Plan implements State Water Board Resolution No. 88-63, which establishes state policy that all waters, with certain exceptions, should be considered suitable or potentially suitable for municipal or domestic supply. With high concentrations of total dissolved solids, ocean waters meet an exception to State Water Board Resolution No. 88-63; and therefore, the MUN designation is not applicable to the ocean receiving water for this Permittee. Beneficial uses applicable to the Pacific Ocean are summarized in Table F-3, below:

DRAFT

Table F-3. Basin Plan Beneficial Uses

Discharge Point	Receiving Water Name	Beneficial Use(s)
001	Pacific Ocean	Existing: Navigation (NAV); Water contact recreation (REC-1); Non-contact water recreation (REC-2); Commercial and sport fishing (COMM); Wildlife habitat (WILD); Rare, threatened, or endangered species (RARE); Marine habitat (MAR); Migration of aquatic organisms (MIGR); Spawning, reproduction, and/or early development (SPAWN); Shellfish harvesting (SHELL); and Aquaculture (AQUA). Potential: Industrial water supply (IND); Industrial process supply (PRO); and Preservation of Areas of Special Biological Significance (ASBS).
002	Groundwater	Existing: Municipal and domestic supply (MUN); Agricultural supply (AGR); Industrial service supply (IND); and Native American Culture (CUL). Potential Industrial Process Supply (PRO); and Aquaculture (AQUA).

Requirements of this Order implement the Basin Plan.

2. **Thermal Plan.** The State Water Board adopted a *Water Quality Control Plan for Control of Temperature in the Coastal and Interstate Waters and Enclosed Bays and Estuaries of California* (Thermal Plan) on January 7, 1971, and amended this plan on September 18, 1975. This plan contains temperature objectives for coastal waters. The Permittee does not discharge thermal waste; therefore, the Order does not include effluent limitations for temperature in response to the requirements of the Thermal Plan.

3. **California Ocean Plan.** The State Water Board adopted the Water Quality Control Plan for Ocean Waters of California, California Ocean Plan (Ocean Plan) in 1972 and amended it in 1978, 1983, 1988, 1990, 1997, 2000, 2005, 2009, and 2012. The State Water Board adopted the latest amendment on October 16, 2012, and it became effective on August 19, 2013. The Ocean Plan is applicable, in its entirety, to point source discharges to the Pacific Ocean. In order to protect the beneficial uses, the Ocean Plan establishes water quality objectives and a program for implementation. The Ocean Plan identifies the beneficial uses of ocean waters of the state to be protected as summarized below:

DRAFT

Table F-4. Ocean Plan Beneficial Uses

Discharge Point	Receiving Water Name	Beneficial Use(s)
001	Pacific Ocean	Existing: Industrial water supply; Water contact and non-contact recreation, including aesthetic enjoyment; Navigation; Commercial and sport fishing; Mariculture; Preservation and enhancement of designated Areas of Special Biological Significance (ASBS); Rare and endangered species; Marine habitat; Fish migration; Fish spawning; and Shellfish harvesting.

Requirements of this Order implement the Ocean Plan.

4. **Compliance Schedules and Interim Requirements.** The State Water Board adopted Resolution No. 2008-0025 on April 15, 2008, titled *Policy for Compliance Schedules in National Pollutant Discharge Elimination System Permits*, which includes compliance schedule policies for pollutants that are not addressed by the *Policy for Implementation of Toxics Standards for Inland Surface Waters, Enclosed Bays, and Estuaries of California* (State Implementation Policy or SIP). This Policy became effective on August 27, 2008.

   This Order does not include any compliance schedules or interim effluent limitations.

5. **Antidegradation Policy.** 40 C.F.R. section 131.12 requires that the state water quality standards include an antidegradation policy consistent with the federal policy. The State Water Board established California's antidegradation policy in State Water Board Resolution No. 68-16. Resolution No. 68-16 incorporates the federal antidegradation policy where the federal policy applies under federal law. Resolution No. 68-16 requires that existing water quality be maintained unless degradation is justified based on specific findings. The Regional Water Board's Basin Plan implements, and incorporates by reference, both the state and federal antidegradation policies. The permitted discharge must be consistent with the antidegradation provision of 40 C.F.R. section 131.12 and State Water Board Resolution No. 68-16. As discussed in detail in section IV.D.2 of this Fact Sheet, the permitted discharge is consistent with the antidegradation provision of 40 C.F.R. section 131.12 and State Water Board Resolution No. 68-16.

6. **Anti-Backsliding Requirements.** Sections 402(o)(2) and 303(d)(4) of the CWA and federal regulations at 40 C.F.R. section 122.44(l) restrict backsliding in NPDES permits. These anti-backsliding provisions require that effluent limitations in a reissued permit must be as stringent as those in the previous permit, with some exceptions in which limitations may be relaxed.

7. **Endangered Species Act Requirements.** This Order does not authorize an act that results in the taking of a threatened or endangered species or any act that is now prohibited, or becomes prohibited in the future, under either the California Endangered Species Act (Fish and Game Code sections 2050 or 2097) or the Federal Endangered Species Act (16 U.S.C.A sections 1531 to 1544). This Order requires compliance with effluent limits, receiving water limits, and other requirements to protect the beneficial uses of waters of the state. The

DRAFT

Permittee is responsible for meeting all requirements of the applicable Endangered Species Act.

D. Impaired Water Bodies on the CWA section 303(d) List

Section 303(d) of the federal CWA requires states to identify waterbodies that do not meet water quality standards and are not supporting their beneficial uses after implementation of technology-based effluent limitations on point sources. Each state must submit an updated list, the 303(d) List of Impaired Waterbodies every two years. In addition to identifying the waterbodies that are not supporting beneficial uses, the 303(d) list also identifies the pollutant or stressor causing impairment and establishes a schedule for developing a control plan to address the impairment. The CWA requires development of a total maximum daily load (TMDL) or alternate program of implementation for each 303(d) listed pollutant and water body to remedy the impairment. TMDLs establish the maximum quantity of a given pollutant that can be added to a water body from all sources without exceeding the applicable water quality standard for that pollutant and determine wasteload allocations (the portion of a TMDL allocated to existing and future point sources) and load allocations (the portion of a TMDL attributed to existing and future nonpoint sources).

On June 26, 2015, the U.S. EPA provided final approval of the 2012 303(d) list of impaired water bodies prepared by the state. The Pacific Ocean, in the vicinity of the discharge, is not listed as an impaired waterbody on the 303(d) list.

E. Other Plans, Policies and Regulations

1. On May 2, 2006, the State Water Board adopted State Water Board Order No. 2006-0003-DWQ, *Statewide General WDRs for Sanitary Sewer Systems* and on August 6, 2013 adopted Order No. WQ 2013-0058-EXEC Amending Monitoring and Reporting Program for Statewide General Waste Discharge Requirements for Sanitary Sewer Systems. Order No. 2006-0003-DWQ requires that all public agencies that currently own or operate sanitary sewer systems apply for coverage under the General WDRs. The deadline for Permittees to apply for coverage was November 2, 2006. The Permittee applied for coverage and is subject to the requirements of Order Nos. 2006-0003-DWQ and WQ 2013-0058-EXEC and any future revisions thereto for operation of its wastewater collection system.

2. All areas within the Facility drain to the headworks. State Water Board Water Quality Order No. 2014-0057-DWQ, NPDES General Permit No. CAS000001, General Permit for Storm Water Discharges Associated with Industrial Activities (Industrial Storm Water General Permit) does not require facilities to obtain coverage if storm water is captured and treated and/or disposed of within the facility's NPDES permitted process wastewater or if storm water is disposed of evaporation ponds, percolation ponds, or combined sewer systems. Therefore, coverage under the Industrial Storm Water General Permit is not required for this Facility.

IV. RATIONALE FOR EFFLUENT LIMITATIONS AND DISCHARGE SPECIFICATIONS

The CWA requires point source dischargers to control the amount of conventional, non-conventional, and toxic pollutants that are discharged into the waters of the United States. The control of pollutants discharged is established through effluent limitations and other requirements in NPDES permits. There are two principal bases for effluent limitations in the Code of Federal Regulations: 40 C.F.R. section 122.44(a) requires that permits include applicable technology-based limitations and standards; and 40 C.F.R. section 122.44(d) requires that permits include water quality-based effluent limitations (WQBELs) to attain and maintain applicable numeric and narrative water quality criteria to protect the beneficial uses of the receiving water where a reasonable potential to exceed those criteria exist.

DRAFT

A. Discharge Prohibitions

1. **Discharge Prohibition III.A.** The discharge of any waste not disclosed by the Permittee or not within the reasonable contemplation of the Regional Water Board is prohibited.

   This prohibition has been retained from Order No. R1-2011-0019 and is based on the Basin Plan and State Water Board Order No. WQO 2002-0012 regarding the petition of WDRs Order No. 01-072 for the East Bay Municipal Utility District and Bay Area Clean Water Agencies. In State Water Board Order No. WQO 2002-0012, the State Water Board found that this prohibition is acceptable in orders, but should be interpreted to apply only to constituents that are either not disclosed by the Permittee, or are not reasonably anticipated to be present in the discharge but have not been disclosed by the Permittee. It specifically does not apply to constituents in the discharge that do not have "reasonable potential" to exceed water quality objectives.

   The State Water Board has stated that the only pollutants not covered by this prohibition are those which were "*disclosed to the permitting authority and…can be reasonably contemplated*." [In re the Petition of East Bay Municipal Utilities District et al., (State Water Board, 2002) Order No. WQO 2002-0012, p. 24]. In that Order, the State Water Board cited a case which held the Permittee is liable for the discharge of pollutants "*not within the reasonable contemplation of the permitting authority…<u>whether spills or otherwise</u>…*" [*Piney Run Preservation Assn. v. County Commissioners of Carroll County, Maryland* (4th Cir. 2001) 268 F. 3d 255, 268.] Thus the State Water Board authority provides that, to be permissible, the constituent discharged (1) must have been disclosed by the Permittee and (2) can be reasonably contemplated by the Regional Water Board.

2. **Discharge Prohibition III.B.** Creation of pollution, contamination, or nuisance, as defined by section 13050 of the Water Code is prohibited.

   This prohibition has been retained from Order No. R1-2011-0019 and is based on section 13050 of the Water Code and section 5411 of the California Health and Safety Code.

3. **Discharge Prohibition III.C.** The discharge of sludge or digester supernatant is prohibited, except as authorized under section VI.C.5.c of this Order (Sludge Disposal and Handling Requirements).

   This prohibition has been retained from Order No. R1-2011-0019 and is based on restrictions on the disposal of sewage sludge found in federal regulations [40 C.F.R. part 503 (Biosolids), Part 527, and Part 258] and title 27 of the CCR.

4. **Discharge Prohibition III.D.** The discharge or recycling use of untreated or partially treated waste (receiving a lower level of treatment than described in section II.A of the Fact Sheet) from anywhere within the collection, treatment, or disposal systems is prohibited, except as provided for in Attachment D, Standard Provisions G (Bypass) and H (Upset).

   This prohibition has been retained from Order No. R1-2011-0019 and is based on the Basin Plan to protect the beneficial uses of the receiving water from unpermitted discharges, and the intent of the Water Code sections 13260 through 13264 relating to the discharge of waste to waters of the state without filing for and being issued an Order. This prohibition applies to spills not related to sanitary sewer overflows (SSOs) and other unauthorized discharges of wastewater within the collection, treatment, and disposal facilities. The discharge of untreated or partially treated wastewater from the collection, treatment, or disposal facility represents an unauthorized bypass pursuant to 40 C.F.R. section 122.41(m) or an unauthorized discharge which poses a threat to human health and/or aquatic life, and therefore is explicitly prohibited by this Order.

DRAFT

5. **Discharge Prohibition III.E.** Any sanitary sewer overflow (SSO) that results in a discharge of untreated or partially treated wastewater to (a) waters of the state or (b) land that creates pollution, contamination, or nuisance, as defined in Water Code section 13050(m) is prohibited.

   This prohibition has been retained from Order No. R1-2011-0019 with a minor modification. A reference to groundwater has been removed because groundwater is captured in the broader term, "waters of the state". This prohibition applies to spills related to SSOs and is based on state standards, including section 13050 of the Water Code and the Basin Plan. This prohibition is consistent with the state's antidegradation policy as specified in State Water Board Resolution No. 68-16 (*Statement of Policy with Respect to Maintaining High Quality of Water in California*) in that the prohibition imposes conditions to prevent impacts to water quality, the degradation of water quality, negative effects on receiving water beneficial uses, and lessening of water quality beyond that prescribed in State Water Board or Regional Water Board plans and policies.

   This prohibition is stricter than the prohibitions stated in State Water Board Order 2006-0003-DWQ, Statewide General Waste Discharge Requirements for Sanitary Sewer Systems. Order No. 2006-0003-DWQ prohibits SSOs that result in the discharge of untreated or partially treated wastewater to waters of the United States and SSOs that cause a nuisance, compared to Prohibition III.E of this Order, which prohibits SSO discharges that create nuisance or pollution to waters of the state and land for a more complete protection of human health. The rationale for this prohibition is because of the prevalence of high groundwater in the North Coast Region and this Region's reliance on groundwater as a drinking water source.

6. **Discharge Prohibition III.F.** The discharge of waste to land that is not owned by the Permittee, governed by City ordinance, or under agreement to use by the Permittee, or for which the Permittee has explicitly permitted such use, is prohibited, except for use for non-structural fire suppression as provided in title 22, sections 60307(a) and 60307(b) of the CCR.

   This prohibition is retained from Order R1-2011-0019 with minor modifications. Land used for the application of wastewater must be owned by the Permittee or be under the control of the Permittee by contract so that the Permittee maintains a means for ultimate disposal of treated wastewater.

7. **Discharge Prohibition III.G.** The discharge of waste at any point not described in Finding II.B of the Fact Sheet or authorized by a permit issued by the State Water Board or another Regional Water Board is prohibited.

   This prohibition is newly established in this Order. This prohibition is a general prohibition that allows the Permittee to discharge waste only in accordance with WDRs. It is based on sections 301 and 402 of the federal CWA and section 13263 of the Water Code.

8. **Prohibition III.H**. The average dry weather flow of waste through the Facility shall not exceed 1.86 mgd, measured daily and averaged over a calendar month. The peak daily wet weather flow of waste through the Facility shall not exceed 6.12 mgd, measured daily. Compliance with this prohibition shall be determined as defined in sections VII.J and VII.K of this Order.

   The average dry weather flow prohibition is retained from Order No. R1-2011-0019 and the peak daily wet weather flow prohibition is newly established in this Order. These prohibitions are based on the average dry weather and peak wet weather discharge treatment capacity of the Facility. Exceedance of this capacity on a daily basis may result in

DRAFT

effluent violations and/or the need to by-pass untreated effluent blended with treated effluent, which is prohibited.

9. **Prohibition III.I.** The discharge of any radiological, chemical, or biological warfare agent or high-level radioactive waste into waters of the state is prohibited.

   This prohibition is retained from Order No. R1-2011-0019 and is based on the discharge prohibitions contained in section III.I of the Ocean Plan and section 13375 of the Water Code.

10. **Prohibition III.J.** The discharge of sludge directly into the ocean or into a waste stream that discharges to the ocean is prohibited.

    This prohibition is retained from Order No. R1-2011-0019 and is based on the Ocean Plan.

11. **Prohibition III.K.** The by-passing of untreated wastes containing concentrations of pollutants in excess of those of Ocean Plan Tables 1 2 (2012) is prohibited.

    This prohibition is newly established by this Order and is based on the discharge prohibitions contained in section III.I. of the Ocean Plan.

12. **Prohibition III.L.** The acceptance of septage to a location other than an approved septage receiving station is prohibited.

    This prohibition is newly established by this Order and is necessary to ensure that the Permittee is aware of all discharges of septage into the treatment system so that pollutants associated with domestic septage do not pass through or interfere with the operation or performance of the Facility.

DRAFT

B. Technology-Based Effluent Limitations

1. Scope and Authority

Section 301(b) of the CWA and implementing U.S. EPA permit regulations at 40 C.F.R. section 122.44 require that permits include conditions meeting applicable technology-based requirements at a minimum, and any more stringent effluent limitations necessary to meet applicable water quality standards. The discharge authorized by this Order must meet minimum federal technology-based requirements based on Secondary Treatment Standards at 40 C.F.R. part 133.

Regulations promulgated in 40 C.F.R. section 125.3(a)(1) require technology-based effluent limitations for municipal dischargers to be placed in NPDES permits based on Secondary Treatment Standards or Equivalent to Secondary Treatment Standards.

The Federal Water Pollution Control Act Amendments of 1972 (PL 92-500) established the minimum performance requirements for POTWs [defined in section 304(d)(1)]. Section 301(b)(1)(B) of that Act requires that such treatment works must, as a minimum, meet effluent limitations based on secondary treatment as defined by the U.S. EPA Administrator.

Based on this statutory requirement, U.S. EPA developed secondary treatment regulations, which are specified in 40 C.F.R. part 133. These technology-based regulations apply to all municipal wastewater treatment plants and identify the minimum level of effluent quality attainable by secondary treatment in terms of BOD_5, TSS, and pH, as follows:

a. BOD_5 and TSS

i. The 30-day average shall not exceed 30 mg/L.

ii. The 7-day average shall not exceed 45 mg/L.

iii. The 30-day average percent removal shall not be less than 85%.

b. pH

The pH shall be maintained within the limits of 6.0 to 9.0.

The effluent limitation for pH required to meet the water quality objective for hydrogen ion concentration (pH) is contained in the Basin Plan, Table 3-1.

In addition, 40 C.F.R. section 122.45(f) requires the establishment of mass-based effluent limitations for all pollutants limited in Orders, except for 1) pH, temperature, radiation, or other pollutants which cannot be appropriately expressed by mass, and 2) when applicable standards and limitations are expressed in terms of other units of measure.

2. Applicable Technology-Based Effluent Limitations

a. Secondary Treatment Standards (BOD_5, TSS, and pH). As described above, the secondary treatment standards at 40 C.F.R. part 133 establish the minimum level of effluent quality attainable by secondary treatment in terms of BOD_5, TSS, and pH. Numeric effluent limitations for BOD_5, TSS, and pH, including the percent removal requirement for TSS, are retained from Order No. R1-2011-0019 and reflect the secondary treatment standards at 40 C.F.R. part 133.

Order No. R1-2011-0019 included a lower percent removal requirement than required by the secondary treatment regulations for BOD_5 as allowed by 40 C.F.R. section 133.103(d) for less concentrated influent wastewater. The regulation states that a lower percent removal requirement may be substituted for the 85 percent removal

DRAFT

requirement set forth in 40 C.F.R. section 133.102(a)(3) if the following three conditions are met:

i. The treatment works is consistently meeting, or will consistently meet, its permit effluent concentration limits but, its percent removal requirements cannot be met due to less concentrated influent wastewater;

ii. To meet the percent removal requirements, the treatment works would have to achieve significantly more stringent limitations than would otherwise be required by the concentration-based standards; and

iii. The less concentrated influent wastewater is not the result of excessive infiltration and inflow (I/I). The determination of whether the less concentrated wastewater is the result of excessive I/I will use the definition of excessive I/I in 40 C.F.R. section 35.2005(b)(16) plus the additional criterion that inflow is nonexcessive if the total flow to the POTW (i.e., wastewater plus inflow plus infiltration) is less than 275 gallons per capita per day.

Based on monitoring data collected during the term of Order No. R1-2011-0019, the Facility does not meet the conditions at 40 C.F.R. section 103(d) for the allowance of a lower percent removal requirement. The minimum observed percent removal for BOD_5 was 86 percent based on monitoring data collected between July 2011 and May 2016. Thus, it appears that the treatment works is consistently meeting the percent removal requirement of 85 percent.

Additionally, the less concentrated influent wastewater appears to be the result of excessive I/I. Section 3.1 of the ROWD states, "*Typical of coastal cities in the region, Crescent City's coastal environment is prone to intense rainfall and extremely wet rainy seasons. Infiltration/inflow (I/I) can stress the collection system and has caused occasional failure in the past. The system is susceptible to I/I-induced flows due to poor pipe conditions, deteriorated laterals, and leaky manholes.*" Section 4.1 of the ROWD states, "*Although the MBR has been able to achieve higher removal rates, dilute influent flows area still observed during wet weather months…*" Using effluent flow data collected between July 2011 and May 2016 (influent flow data was not available) and a population of 17,620 as reported in the ROWD, the Regional Water Board conducted an analysis of per capita flows for comparison with the definitions of "excessive I/I" in 40 C.F.R. sections 35.2005(b)(28) and 133.103(d) (i.e., greater than 275 gallons per capita per day). Effluent flows exceeded 275 gpd per capita on five occasions in March/April 2012 and December 2015, which corresponded to significant wet weather events.

Because the Facility does not meet the conditions at 40 C.F.R. section 103(d) for the allowance of a lower percent removal requirement, this Order includes a more stringent percent removal effluent limitation of 85 percent based on the secondary treatment standards at 40 C.F.R. section 133.102(a)(3).

b. Ocean Plan Table 2 Effluent Limitations (Oil and Grease, TSS, Settleable Solids, Turbidity, and pH). The State Water Board, in Table 2 of the Ocean Plan, has established technology-based requirements for oil and grease, TSS, settleable solids, turbidity, and pH. Table 2 effluent limitations apply to POTWs, and also to industrial discharges for which Effluent Limitations Guidelines have not been established pursuant to Sections 301, 302, 304, or 306 of the federal CWA. Compliance with Table 2 effluent limitations shall be the minimum level of treatment acceptable under the Ocean Plan, and shall define reasonable treatment and waste control technology. The

DRAFT

Facility is a POTW; therefore, technology-based limitations contained in Table 2 of the Ocean Plan are applicable to the Permittee.

Consistent with Order No. R1-2011-0019, this Order includes effluent limitations for oil and grease, turbidity, and pH based on Table 2 of the Ocean Plan.

Order No. R1-2011-0019 included an instantaneous maximum effluent limitation of 3.0 ml/L for settleable solids based on Table 2 of the Ocean Plan, but included more stringent average monthly and maximum daily effluent limitations than required in Table 2 of the Ocean Plan. These effluent limitations were retained in from this previous Order No. R1-2006-0001 based on best professional judgement (BPJ). 40 C.F.R. section 125.3(a)(2) allows for establishment of technology-based effluent limitations based on BPJ for dischargers other than POTWs. For POTWs, 40 C.F.R. section 125.3(a)(1) and section 133 specify that technology-based effluent limitations must be based upon secondary treatment or equivalent to secondary treatment standards. Since the Facility is a POTW, the establishment of technology-based effluent limitations for settleable solids based on BPJ is not permissible under 40 C.F.R. section 125.3(a)(2). CWA Section 301(b) and 40 C.F.R. section 122.44(d) require that permits include limitations more stringent than applicable federal technology-based requirements where necessary to achieve applicable water quality standards. The Regional Water Board does not find that these limitations, which are more stringent than the applicable technology-based requirements in the Ocean Plan, are necessary to achieve applicable water quality standards. Therefore, this Order does not retain the more stringent average monthly and maximum daily effluent limitations from Order No. R1-2011-0019.

The percent removal requirements for TSS in the secondary treatment requirements (i.e., 85 percent) are more stringent than the percent removal requirements in Table 2 of the Ocean Plan (i.e., 75 percent); therefore, consistent with Order No. R1-2011-0019, this Order includes percent removal requirements for TSS based on the secondary treatment standards at 40 C.F.R. part 133.

c. **Mass-Based Effluent Limitations.** Federal regulations at 40 C.F.R. section 122.45(f) require that, except under certain conditions, all permit limits, standards, or prohibitions be expressed in terms of mass units. Among the conditions exempting the application of mass-based limitations is section 40 C.F.R. section 122.45(f)(1)(i), which states "*for pH, temperature, and radiation, or other pollutants which cannot appropriately be expressed by mass*" and 40 C.F.R. section 122.45(f)(1)(ii), which states "*when applicable standards and limitations are expressed in terms of other units of measure.*"

This Order does not include mass-based effluent limitations for the following pollutants pursuant to the exception in 40 C.F.R, section 122.45(f)(1)(i) and (ii):

i. Settleable solids, turbidity, and pH because these parameters cannot appropriately be expressed by mass; and

ii. Oil and grease, because the applicable standards for oil and grease in Table 2 of the Ocean Plan are expressed in terms of concentration.

Based on the I/I issues discussed in section IV.B.2.a above, this Order retains mass-based effluent limitations for BOD_5 and TSS to ensure that dilution is not used as a substitute for treatment. Order No. R1-2011-0019 calculated mass-based effluent limitations for TSS based on the permitted average dry weather flow of 1.86 mgd. For BOD_5, Order No. R1-2011-0019 included a performance-based mass limitation to

account for high wet weather influent flows and reflect the demonstrated treatment performance of the Facility from 2000 to 2005. The Permittee installed the MBR treatment system in 2010 and monitoring data collected between July 2011 and May 2016 indicates that the Permittee is able to consistently comply with mass-based effluent limitations based on the permitted average dry weather flow of 1.86 mgd. Therefore, this Order includes revised mass-based effluent limitations for BOD_5 based on the permitted average dry weather flow of 1.86 mgd.

C. Water Quality-Based Effluent Limitations (WQBELs)

1. Scope and Authority

CWA Section 301(b) and 40 C.F.R. section 122.44(d) require that permits include limitations more stringent than applicable federal technology-based requirements where necessary to achieve applicable water quality standards.

Section 122.44(d)(1)(i) of 40 C.F.R. requires that permits include effluent limitations for all pollutants that are or may be discharged at levels that have the reasonable potential to cause or contribute to an exceedance of a water quality standard, including numeric and narrative objectives within a standard. Where reasonable potential has been established for a pollutant, but there is no numeric criterion or objective for the pollutant, WQBELs must be established using: (1) U.S. EPA criteria guidance under CWA section 304(a), supplemented where necessary by other relevant information; (2) an indicator parameter for the pollutant of concern; or (3) a calculated numeric water quality criterion, such as a proposed state criterion or policy interpreting the state's narrative criterion, supplemented with other relevant information, as provided in section 122.44(d)(1)(vi).

The process for determining reasonable potential and calculating WQBELs when necessary is intended to protect the designated uses of the receiving water as specified in the Basin Plan and Ocean Plan, and achieve applicable water quality objectives and criteria that are contained in other state plans and policies, or any applicable water quality criteria contained in the Ocean Plan.

2. Applicable Beneficial Uses and Water Quality Criteria and Objectives

a. Beneficial Uses. Beneficial use designations for receiving waters for discharges from the Facility are presented in section III.C.1 and III.C.3 of this Fact Sheet.

b. Ocean Plan Water Quality Objectives. Water quality criteria applicable to ocean waters of the Region are established by the Ocean Plan, which includes general provisions and water quality objectives for bacterial characteristics, physical characteristics, chemical characteristics, biological characteristics, and radioactivity. These water quality objectives from the Ocean Plan are incorporated as receiving water limitations in section V.A of the Order. Table 1 of the Ocean Plan contains numeric water quality objectives for 83 toxic pollutants for the protection of marine aquatic life and human health. Pursuant to NPDES regulations at 40 C.F.R. section 122.44(d)(1), and in accordance with procedures established by the Ocean Plan, the Regional Water Board has performed an Ocean Plan reasonable potential analysis (RPA) to determine the need for effluent limitations for the Table 1 toxic pollutants.

3. Determining the Need for WQBELs

NPDES regulations at 40 C.F.R. section 122.44(d) require effluent limitations to control all pollutants which are or may be discharged at a level which will cause, have the reasonable potential to cause, or contribute to an excursion above any state water quality standard.

DRAFT

a. **Ocean Plan Reasonable Potential Analysis (RPA).** Procedures for performing an RPA for ocean dischargers are described in Section III.C. and Appendix VI of the Ocean Plan. In general, the procedure is a statistical method that projects an effluent data set while taking into account the averaging period of water quality objectives, the long term variability of pollutants in the effluent, limitations associated with sparse data sets, and uncertainty associated with censored data sets. The procedure assumes a lognormal distribution of the effluent data set, and compares the 95th percentile concentration at 95 percent confidence of each Table 1 pollutant, accounting for dilution, to the applicable water quality criterion. The RPA results in one of three following endpoints.

Endpoint 1 – There is "reasonable potential," and a WQBEL and monitoring are required.

Endpoint 2 – There is "no reasonable potential." WQBELs are not required, and monitoring is required at the discretion of the Regional Water Board.

Endpoint 3 – The Ocean Plan RPA is inconclusive. Existing WQBELs are retained, and monitoring is required.

The State Water Resources Control Board has developed a reasonable potential calculator, which is available at http://www.waterboards.ca.gov/plnspols/docs/oplans/rpcalc.zip. The calculator (RPcalc 2.2) was used in conducting the RPA and considers several pathways in the determination of reasonable potential.

i. First Path

If available information about the receiving water or the discharge supports a finding of reasonable potential without analysis of effluent data, the Regional Water Board may decide that WQBELs are necessary after a review of such information. Such information may include: the facility or discharge type, solids loading, lack of dilution, history of compliance problems, potential toxic effects, fish tissue data, 303(d) status of the receiving water, or the presence of threatened or endangered species or their critical habitat, or other information.

ii. Second Path

If any pollutant concentration, adjusted to account for dilution, is greater than the most stringent applicable water quality objective, there is reasonable potential for that pollutant.

iii. Third Path

If the effluent data contains three or more detected and quantified values (i.e., values that are at or above the ML), and all values in the data set are at or above the ML, a parametric RPA is conducted to project the range of possible effluent values. The 95th percentile concentration is determined at 95 percent confidence for each pollutant, and compared to the most stringent applicable water quality objective to determine reasonable potential. A parametric analysis assumes that the range of possible effluent values is distributed log normally. If the 95th percentile value is greater than the most stringent applicable water quality objective, there is reasonable potential for that pollutant.

DRAFT

iv. Fourth Path

If the effluent data contains three or more detected and quantified values (i.e., values that are at or above the ML), but at least one value in the data set is less than the ML, a parametric RPA is conducted according to the following steps.

(a) If the number of censored values (those expressed as a "less than" value) account for less than 80 percent of the total number of effluent values, calculate the ML (the mean of the natural log of transformed data) and SL (the standard deviation of the natural log of transformed data) and conduct a parametric RPA, as described above for the Third Path.

(b) If the number of censored values account for 80 percent or more of the total number of effluent values, conduct a non-parametric RPA, as described below for the Fifth Path. (A non-parametric analysis becomes necessary when the effluent data is limited, and no assumptions can be made regarding its possible distribution.)

v. Fifth Path

A non-parametric RPA is conducted when the effluent data set contains less than three detected and quantified values, or when the effluent data set contains three or more detected and quantified values but the number of censored values accounts for 80 percent or more of the total number of effluent values. A non-parametric analysis is conducted by ordering the data, comparing each result to the applicable water quality objective, and accounting for ties. The sample number is reduced by one for each tie, when the dilution adjusted method detection limit (MDL) is greater than the water quality objective. If the adjusted sample number, after accounting for ties, is greater than 15, the pollutant has no reasonable potential to exceed the water quality objective. If the sample number is 15 or less, the RPA is inconclusive, monitoring is required, and any existing effluent limitations in the expiring permit are retained.

b. Reasonable Potential Determination

The RPA for the effluent was conducted using effluent monitoring data generated from annual monitoring events for all Ocean Plan Table 1 parameters in May 2012, August 2013, September 2014, and October 2015 and from routine monitoring events conducted between July 2011 through October 2015 for ammonia, copper, zinc, TCDD equivalents, bis(2-ethylhexyl) phthalate, tetrachloroethylene, chlorine residual, and chronic toxicity as required by the Monitoring and Reporting Program for Order No. R1-2011-0019. Results from the RPA have been used to determine the need for effluent limitations for Table 1 parameters given in the Ocean Plan.

For the RPA conducted for this permit renewal, pollutant concentrations were adjusted to account for the calculated initial dilution of 29 parts seawater per part wastewater. The adjustment for dilution is consistent with previous orders for this Facility.

The table below identifies the RPA endpoint for each Table 1 parameter detected in the effluent and shows the analysis reached an Endpoint 3 for most of the parameters analyzed. An Endpoint 3 RPA is inconclusive and results when a majority of the effluent data is reported as ND (not detected). In these circumstances, the Regional Water Board views the "inconclusive" result as an indication of no concern for a particular pollutant; however, additional monitoring will be required for those parameters during the term of the permit.

DRAFT

The RPA conducted for the Facility demonstrated reasonable potential (Endpoint 1) for discharges from the Facility to cause or contribute to exceedances of applicable water quality criteria for copper, nickel, dieldrin, TCDD equivalents, and chronic toxicity.

Order No. R1-2011-0019 established effluent limitations for bis(2-ethylhexyl) phthalate and tetrachloroethylene based on the numeric water quality criteria from the Ocean Plan. As shown in the table below, the RPA conducted for the Facility was inconclusive (Endpoint 3) for bis (2-ethylhexyl) phthalate and tetrachloroethylene. For RPA results of Endpoint 3, the Ocean Plan specifies that existing effluent limitations for the pollutant shall remain in the permit. Therefore, this Order retains the effluent limitations for bis(2-ethylhexyl) phthalate and tetrachloroethylene from Order No. R1-2011-0019.

Order No. R1-2011-0019 established effluent limitations for chlorine residual. As shown in the table below, the RPA conducted for the Facility demonstrated no reasonable potential (Endpoint 2) for discharges to cause or contribute to exceedances of applicable water quality criteria for chlorine residual. However, as discussed further in section IV.C.3.c.i of this Fact Sheet, effluent limitations for chlorine residual are retained in this Order.

The following table summarizes the RPA for each priority pollutant that was reported in detectable concentrations in the effluent. The MECs, most stringent water quality objectives (WQO), and background concentrations (B) used in the RPA are presented, along with the RPA results for each toxic pollutant analyzed. No other pollutants with applicable numeric water quality criteria from the Ocean Plan were measured above detectable concentrations or analyzed for during the monitoring events conducted by the Permittee.

Attachment F-1 to this Order includes a summary of RPA results for all priority toxic pollutants with water quality criteria/objectives that are applicable to the Pacific Ocean.

Table F-5. Summary of Reasonable Potential Analysis Results

Table B Pollutant	Most Stringent WQO (µg/L)	No. of Samples	No. of Non-Detects	Back-ground Conc (µg/L) Cs[1]	Max Effluent Conc. (µg/L) Ce	Calculated Max Conc. (µg/L)[2] X-obs	RPA Results, Comment
Objectives for Protection of Marine Aquatic Life							
Ammonia	600	209	17	0	25.5	0.2575[3]	Endpoint 2 - An effluent limitation is not required for the pollutant. Monitoring may be required as appropriate.
Arsenic	8	4	3	3	1.08	2.936	Endpoint 3 - RPA is inconclusive. Less than 3 detects or greater than 80% ND.

DRAFT

Table B Pollutant	Most Stringent WQO (µg/L)	No. of Samples	No. of Non-Detects	Back-ground Conc (µg/L) Cs[1]	Max Effluent Conc. (µg/L) Ce	Calculated Max Conc. (µg/L)[2] X-obs	RPA Results, Comment
Cadmium	1	4	3	0	0.133	0.0044	Endpoint 3 - RPA is inconclusive. Less than 3 detects or greater than 80% ND.
Chromium (VI)	2	2	1	0	0.03	0.001	Endpoint 3 - RPA is inconclusive. Less than 3 detects or greater than 80% ND.
Copper	3	54	0	2	45	3.4333	Endpoint 1 – An effluent limitation must be developed for the pollutant. Monitoring is required.
Total Residual Chlorine	2	1,431	1,429	0	5.05	0.1683	Endpoint 1 - An effluent limitation must be developed for the pollutant. Monitoring is required.[4]
Lead	2	4	3	0	0.585	0.0195	Endpoint 3 - RPA is inconclusive. Less than 3 detects or greater than 80% ND.
Nickel	5	4	0	0	16	5.6633[3]	Endpoint 1 - An effluent limitation must be developed for the pollutant. Monitoring is required.
Selenium	15	4	3	0	0.406	0.0135	Endpoint 3 - RPA is inconclusive. Less than 3 detects or greater than 80% ND.
Silver	0.7	4	3	0.16	0.122	0.1587	Endpoint 3 - RPA is inconclusive. Less than 3 detects or greater than 80% ND.

DRAFT

Table B Pollutant	Most Stringent WQO (µg/L)	No. of Samples	No. of Non-Detects	Back-ground Conc (µg/L) Cs[1]	Max Effluent Conc. (µg/L) Ce	Calculated Max Conc. (µg/L)[2] X-obs	RPA Results, Comment
Zinc	20	56	0	8	203	11.8249[3]	Endpoint 2 - An effluent limitation is not required for the pollutant. Monitoring may be required as appropriate.
Objectives for Protection of Human Health – Noncarcinogens							
Antimony	1,200	4	3	0	0.337	0.0112	Endpoint 3 - RPA is inconclusive. Less than 3 detects or greater than 80% ND.
Chromium (III)	190,000	1	0	0	4	0.1333	Endpoint 3 - RPA is inconclusive. Less than 3 detects or greater than 80% ND.
Toluene	85,000	4	1	0	2.6	0.8618[3]	Endpoint 2 - An effluent limitation is not required for the pollutant. Monitoring may be required as appropriate.
Objectives for Protection of Human Health – Carcinogens							
Bis(2-Ethylhexyl) Phthalate	3.5	5	3	0	17	0.5667	Endpoint 3 - RPA is inconclusive. Less than 3 detects or greater than 80% ND.
Chloroform	130	4	0	0	4.2	2.1011[3]	Endpoint 2 - An effluent limitation is not required for the pollutant. Monitoring may be required as appropriate.
Dichloro-bromomethane	6.2	4	3	0	0.59	0.0197	Endpoint 3 - RPA is inconclusive. Less than 3 detects or greater than 80% ND.
Dieldrin	0.00004	4	3	0	0.1	0.0033	Endpoint 1 - An effluent limitation must be developed for the pollutant. Monitoring is required.

DRAFT

Table B Pollutant	Most Stringent WQO (µg/L)	No. of Samples	No. of Non-Detects	Back-ground Conc (µg/L) Cs[1]	Max Effluent Conc. (µg/L) Ce	Calculated Max Conc. (µg/L)[2] X-obs	RPA Results, Comment
TCDD Equivalents	3.9×10^{-9}	4	1	0	2.62×10^{-8}	4.90×10^{-9}	Endpoint 1 - An effluent limitation must be developed for the pollutant. Monitoring is required.
Tetrachloroethylene	2.0	5	5	0	<0.5	<0.0333	Endpoint 3 - RPA is inconclusive. Less than 3 detects or greater than 80% ND.
Chronic Toxicity	1 TUc	32	0	0	62.5 TUc	2.0833 TUc	Endpoint 1 - An effluent limitation must be developed for the pollutant. Monitoring is required.

Table Notes:

1. Background (Cs) is zero (0) for all pollutants except those with background concentrations specified in Table 3 of the Ocean Plan.
2. Represents the the maximum concentration after complete mixing, calculated according to Step 4 of Appendix VI of the Ocean Plan using the permitted dilution ratio (Dm) of 29 as follows: X-obs = (Ce + Dm * Cs)/ (Dm + 1), unless otherwise noted. The calculated maximum concentration is compared to the most stringent water quality objective to determine if effluent limitations are required. Effluent limitations are then calculated as described in Fact Sheet section IV.C.4, below.
3. Represents the one-sided, upper 95% confidence bound for the 95th percentile of the effluent distribution after complete mixing (i.e., the lognormal UCB) calculated per Step 9 of Appendix VI of the Ocean Plan. This was compared to the most stringent water quality objective in lieu of X-obs because 1) X-obs is less than the water quality objective (Step 5), 2) there are three or more detected observations (Step 6), and 3) the data consists entirely of detected values or the data is censored by 80% or less (Steps 7 and 8).
4. Effluent limitations for chlorine residual are necessary per Step 13 of Appendix VI of the Ocean Plan. See section IV.C.3.c.i below for further discussion of the RPA results for chlorine residual.

c. Non-Table 1 Water Quality Objectives

i. Total Residual Chlorine. Effluent limitations for total residual chlorine at Discharge Point 001 are retained from Order No. R1-2011-0019. The Ocean Plan includes total chlorine residual objectives for ocean waters for protection of marine aquatic life. Table 1 of the Ocean Plan includes 6-month median, daily maximum, and instantaneous maximum effluent limitations of 2 µg/L, 8 µg/L, and 60 µg/L, respectively, for total residual chlorine. Based on effluent monitoring data, the discharge does not exhibit reasonable potential to cause or contribute to an exceedance of the water quality objectives in the Ocean Plan. However, the Permittee uses chlorine to disinfect effluent, and as such, the Regional Water Board finds that effluent limitations for total residual chlorine are necessary based on best professional judgment (BPJ) in accordance with Step 13 of Appendix VI of the Ocean Plan.

ii. Fecal Coliform Bacteria. Effluent limitations for fecal coliform bacteria at Discharge Point 001 are retained from Order No. R1-2011-0019 and have been

DRAFT

modified to include the Ocean Plan single sample maximum of 400 MPN per 100 mL for water contact recreation protection.

The Ocean Plan includes bacterial objectives for ocean waters used for water contact recreation and shellfish harvesting. For total and fecal coliform bacteria and the enterococcus group of bacteria, water contact standards must be met within a zone bounded by the shoreline and a distance of 1,000 feet from the shoreline or the 30-foot depth contour, whichever is further from the shoreline. Shellfish harvesting standards for total coliform bacteria must be maintained throughout the water column.

Regional Water Board staff has determined that there is a reasonable potential that the discharge can cause or contribute to exceedances of bacterial water quality objectives for shellfish harvesting and water contact recreation. This determination is based on the following factors:

(a) The Ocean Plan specifies that shellfish and water contact standards shall be maintained throughout the water column (i.e., without dilution credit).

(b) Fecal coliform bacteria have been shown to be present in the discharge. For the period from July 2011 through October 2015, the maximum reported effluent concentration of fecal coliform bacteria was 1,600 MPN/100 mL at Monitoring Location EFF-001.

(c) The Permittee collects effluent grab samples weekly, presenting an incomplete representation of the daily effluent quality.

(d) Public access to offshore areas surrounding the Facility's outfall is open and unrestricted. Members of the public wishing to harvest shellfish in the area can approach by boat and collect shellfish in accordance with state regulations. In addition, water contact recreation also occurs in close proximity to the Facility's outfall.

This Order retains effluent limitations from Order No. R1-2011-0019 for fecal coliform bacteria for shellfish harvesting which were originally established based on U.S. EPA's National Recommended Criteria for shellfish harvesting waters and are included in the National Shellfish Sanitation Program's *Guide for the Control of Molluscan Shellfish,* 2015 Revision. (U. S. Department of Health and Human Services, Food and Drug Administration). The disinfected effluent discharged through Discharge Point 001 shall not contain concentrations of fecal coliform bacteria, as measured at Monitoring Location EFF-001, exceeding the following limitations:

(a) The median value of fecal coliform bacteria shall not exceed an MPN of 14 per 100 mL in a calendar month; and.

(b) No more than 10% of samples collected in a calendar month shall exceed an MPN of 43 per 100 mL.

These effluent limitations can reasonably be expected to be achieved with the Facility's existing facilities and will ensure that bacterial standards for both shellfish harvesting and water contact recreation are maintained throughout the water column.

4. WQBEL Calculations

Based on results of the RPA, performed in accordance with methods of the Ocean Plan for discharges to the Pacific Ocean, the Regional Water Board is establishing WQBELs for

DRAFT

copper, nickel, chlorine residual, bis(2-ethylhexyl) phthalate, dieldrin, TCDD equivalents, and tetrachloroethylene at Discharge Point No. 001.

As described by Section III.C of the Ocean Plan, effluent limits for Table 1 pollutants are calculated according to the following equation.

$$Ce = Co + Dm (Co - Cs)$$

Where …

Ce = the effluent limitation (µg/L)

Co = the concentration (the water quality objective) to be met at the completion of initial dilution (µg/L)

Cs = background seawater concentration (µg/L)

Dm = minimum probable initial dilution expressed as parts seawater per part wastewater (here, Dm = 29)

For the Facility, the Dm of 29 is retained from Order No. R1-2011-0019. Initial dilution is the process that results in the rapid and irreversible turbulent mixing of wastewater with ocean water around the point of discharge. In accordance with Table 1 implementing procedures, Cs equals zero for all parameters, except the following:

Table F-6. Background Seawater Concentrations – Ocean Plan

Pollutant	Background Seawater Concentration (µg/L)
Arsenic	3
Copper	2
Mercury	0.0005
Silver	0.16
Zinc	8

Applicable water quality objectives from Table 1 of the Ocean Plan are as follows.

Table F-7. Water Quality Objectives – Ocean Plan

Pollutant	Units	6-Month Median	Daily Maximum	Instantaneous Maximum	30-Day Average
Copper	µg/L	3	12	30	--
Nickel	µg/L	5	20	50	--
Total Residual Chlorine	µg/L	2	8	60	--
Bis (2-ethylhexyl) phthalate	µg/L	--	--	--	3.5
Dieldrin	µg/L	--	--	--	0.00004
TCDD Equivalents	µg/L	--	--	--	3.9×10^{-9}
Tetrachloroethylene	µg/L	--	--	--	2.0

Using the equation, Ce = Co + Dm (Co – Cs), effluent limitations are calculated as follows. Here, Dm is equal to 29 for each effluent limitation calculation. The effluent limitations established in this Order have been rounded to two significant figures.

<u>Copper</u>

Ce = 3 + 29 (3 – 2) = 32 µg/L (6-Month Median)

Ce = 12 + 29 (12 – 2) = 302 µg/L (Daily Maximum)

Ce = 30 + 29 (30 – 2) = 842 µg/L (Instantaneous Maximum)

Nickel

Ce = 5 + 29 (5 – 0) = 150 µg/L (6-Month Median)

Ce = 20 + 29 (20 – 0) = 600 µg/L (Daily Maximum)

Ce = 50 + 29 (50 – 0) = 1,500 µg/L (Instantaneous Maximum)

Total Residual Chlorine

Ce = 2 + 29 (2 – 0) = 60 µg/L (6-Month Median)

Ce = 8 + 29 (8 – 0) = 240 µg/L (Daily Maximum)

Ce = 60 + 29 (60 – 0) = 1,800 µg/L (Instantaneous Maximum)

Bis (2-ethylhexyl) phthalate

Ce = 3.5 + 29 (3.5 – 0) = 105 µg/L (30-day Average)

Dieldrin

Ce = 0.00004 + 29 (0.00004 – 0) = 0.0012 µg/L (30-day Average)

TCDD Equivalents

Ce = 3.9×10^{-9} + 29 (3.9×10^{-9} – 0) = 1.2×10^{-7} µg/L (30-day Average)

Tetrachloroethylene

Ce =2.0 + 29 (2.0 – 0) = 60 µg/L (30-day Average)

5. Whole Effluent Toxicity (WET)

Monitoring triggers for chronic toxicity protect the receiving water from the aggregate effect of a mixture of pollutants that may be present in effluent. There are two types of WET tests – acute and chronic. An acute toxicity test is conducted over a short time period and measures mortality. A chronic test is conducted over a longer period of time and may measure mortality, reproduction, and/or growth.

WET requirements are derived from the CWA and the Basin Plan. The Basin Plan establishes a narrative water quality objective for toxicity that states "*All waters shall be maintained free of toxic substances in concentrations that are toxic to, or that produce detrimental physiological responses in human, plant, or aquatic life*." Detrimental responses may include, but are not limited to, decreased growth rate, decreased reproductive success of resident or indicator species, and/or significant alterations in population, community ecology, or receiving water biota. For compliance with the Basin Plan's narrative toxicity objective, this Order requires the Permittee to conduct WET testing for chronic toxicity, as specified in the MRP (Attachment E, section V).

The Permittee conducted chronic toxicity testing using *Americamysis bahia, Menidia beryllina,* and *Macrocystis pyrifera*. The following table summarizes the chronic toxicity testing results collected between August 2011 and October 2015.

Table F-8. Summary of Chronic Toxicity Results (TUc)

Date	*Americamysis bahia*		*Menidia beryllina*		*Macrocystis pyrifera*	
	Survival (TUc)	Growth (TUc)	Survival (TUc)	Growth (TUc)	Germination (TUc)	Growth (TUc)
August 1, 2011	7.6	7.6	7.6	7.6	7.6	7.6
January 11, 2012	--	--	--	--	7.6	7.6
July 23, 2012	--	--	--	--	7.6	7.6

Date	*Americamysis bahia*		*Menidia beryllina*		*Macrocystis pyrifera*	
	Survival (TUc)	**Growth (TUc)**	**Survival (TUc)**	**Growth (TUc)**	**Germination (TUc)**	**Growth (TUc)**
January 29, 2013	--	--	--	--	7.6	7.6
August 6, 2013	--	--	--	--	7.6	62.5
February 4, 2014	--	--	--	--	7.6	30.3
February 19, 2014	--	--	--	--	7.6	15.2
February 27, 2014	--	--	--	--	15.2	7.6
March 12, 2014	--	--	--	--	7.6	15.2
March 25, 2014	--	--	--	--	15.2	30.3
September 8, 2014	--	--	--	--	7.6	30.3
September 25, 2014	--	--	--	--	15.2	62.5
April 20, 2015	--	--	--	--	15.2	15.2
October 13, 2015	--	--	--	--	15.2	15.2

The Ocean Plan contains toxicity testing requirements based on minimum initial dilution (Dm) factors in section III.C.4.c. Following the implementation procedures of the Ocean Plan, dischargers with Dm factors that fall below 100:1 are required to conduct chronic toxicity testing. This Order allows for a Dm of 29 for the chronic condition. As shown in Table F-5 of this Fact Sheet, the RPA conducted for the Facility demonstrated reasonable potential (Endpoint 1) for discharges from the Facility to cause or contribute to exceedances of applicable water quality criteria for chronic toxicity. However, the Ocean Plan, Appendix VI, states, "*The Regional Water Board may use an alternative approach for assessing reasonable potential such as an appropriate stochastic dilution model that incorporates both ambient and effluent variability. The permit fact sheet or statement of basis will document the justification or basis for the conclusions of the reasonable potential assessment*." As discussed further below, the discharge does not exhibit reasonable potential to cause or contribute to an exceedance of the water quality objective for chronic toxicity based on the Test of Significant Toxicity (TST) approach in *National Pollutant Discharge Elimination System Test of Significant Toxicity Implementation Document* (EPA 833-R-10-003, 2010). Therefore, this Order does not contain WET limitations. However, in accordance with the Ocean Plan (section III.C, Implementation Provisions for Table 1), this Order retains chronic toxicity monitoring requirements for the discharge at Discharge Point 001.

Test of Significant Toxicity

The Ocean Plan establishes a daily maximum chronic toxicity objective of 1.0 TUc = 100/NOEC, using a five-concentration hypothesis test, and a daily maximum acute toxicity objective of 0.3 TUa = 100/LC50, using a point estimate model. In 2010, U.S. EPA endorsed the peer-reviewed Test of Significant Toxicity (TST) two-concentration hypothesis testing approach in *National Pollutant Discharge Elimination System Test of Significant Toxicity Implementation Document* (EPA 833-R-10-003, 2010) as an improved hypothesis-testing tool to evaluate data from U.S. EPA's toxicity test methods. The TST hypothesis testing approach more reliably identifies toxicity—in relation to the chronic (0.25 or more) and acute (0.20 or more) mean responses of regulatory management concern—than the current NOEC hypothesis-testing approach used in the Ocean Plan.

This Order does not include effluent limitations for toxicity based on the TST approach. However, this Order does require the Permittee to monitor and report results in a manner that will allow the Regional Water Board to conduct an RPA in accordance with the TST approach at the time of the next permit renewal.

The State Water Board is developing a toxicity amendment to the Water Quality Control Plan for Enclosed Bays and Estuaries of California that will standardize the regulation of

DRAFT

aquatic toxicity for all non-oceanic surface waters. U.S. EPA's TST approach is an essential component of this draft toxicity amendment as it forms the basis for utilizing numeric water quality objectives and acts as the primary means of determining compliance with the proposed effluent limitations.

In a letter dated February 12, 2014, the State Water Board submitted an alternative test process (ATP) request to U.S. EPA Region 9 for the statewide use of a two-concentration toxicity test design when using the TST approach. This two-concentration test design is composed of a single effluent concentration and a control concentration. U.S. EPA approved the ATP request on March 17th, 2014. In June 2014, the approval was challenged in court on procedural grounds under the Administrative Procedures Act by the Southern California Alliance of Publicly Owned Treatment Works (SCAP) and the Central Valley Clean Water Association (CVCWA). The U.S. EPA withdrew the approval and notified State Water Board in a memo dated February 11, 2015.

It is important to note that U.S. EPA's rescission of its approval of the ATP is not based on the substantive TST statistical analysis or the scientific validity of a two-concentration test design. The withdrawal letter also states that currently there is a proposed rulemaking to change the language in the ATP regulations at 40 C.F.R. part 136.

The benefits of requiring the TST in new or amended permits include improving the statistical power of the toxicity test, and simplifying the analysis as compared to the traditional hypothesis statistical approaches or point estimates. The calculations are straightforward and provide a clear pass/fail result. With the withdrawal of the two-concentration test design approval, an NPDES permit can still require the TST for statistical analyses. If the two-concentration test design is approved at a future date, the MRP may be modified to remove the need for a five-concentration test. Toxicity tests shall be run using a multi-concentration test design in accordance with 40 C.F.R. section 136.3, and the TST shall be utilized with the biological responses from the permitted in-stream waste concentration (IWC) and the control (effluent concentration of zero). However, even with only two of the five concentration biological responses being used, cost savings in the form of time and effort are still realized for the statistical analysis and data interpretation carried out by the Permittee, lab, and permit manager. This Order requires application of the TST for statistical analysis of whole effluent toxicity data.

Test of Significant Toxicity Design

The TST's null hypothesis for chronic toxicity is:

H_0: Mean response (In-stream Waste Concentration (IWC) in % effluent) ≤ 0.75 mean response (control)

Results are analyzed using the TST approach and an acceptable level of chronic toxicity is demonstrated by rejecting the null hypothesis and reporting "Pass" or "P".

The chronic IWC (in % effluent) for Discharge Point 001 is 3.45%[1]. The chronic toxicity trigger for Discharge Point 001 is expressed as a null hypothesis (H_0) and regulatory management decision (b value) of 0.75 for the chronic toxicity methods in the MRP. The null hypothesis for this discharge is:

H_0: Mean response (3.45% effluent) ≤ 0.75 mean response (control)

The Permittee did not conduct chronic toxicity testing at the IWC of 3.45% during the term of Order No. R1-2011-0019, but did conduct testing at IWCs of 3.3% and 6.6%, which

[1] The IWC was calculated as follows, using the dilution of 29:
1/29 x 100 = 3.45%

bracket the IWC of 3.45%. As shown in the following table, all chronic toxicity tests collected between August 2011 and October 2015 resulted in "Pass" at both IWCs of 3.3% and 6.6%, indicating that the discharge does not exhibit reasonable potential to cause or contribute to an exceedance of water quality objectives for chronic toxicity using the TST approach. Thereore, this Order does not include an effluent limitation for chronic toxicity.

Table F-9. Summary of Chronic Toxicity Results (TST Approach)

Date	In-Stream Waste Concentration (% Effluent)	*Americamysis bahia*		*Menidia beryllina*		*Macrocystis pyrifera*	
		Survival	Growth	Survival	Growth	Germination	Growth
August 1, 2011	3.3	Pass	Pass	Pass	Pass	Pass	Pass
	6.6	Pass	Pass	Pass	Pass	Pass	Pass
January 11, 2012	3.3	--	--	--	--	Pass	Pass
	6.6	--	--	--	--	Pass	Pass
July 23, 2012	3.3	--	--	--	--	Pass	Pass
	6.6	--	--	--	--	Pass	Pass
January 29, 2013	3.3	--	--	--	--	Pass	Pass
	6.6	--	--	--	--	Pass	Pass
August 6, 2013	3.3	--	--	--	--	Pass	Pass
	6.6	--	--	--	--	Pass	Pass
February 4, 2014	3.3	--	--	--	--	Pass	Pass
	6.6	--	--	--	--	Pass	Pass
February 19, 2014	3.3	--	--	--	--	Pass	Pass
	6.6	--	--	--	--	Pass	Pass
February 27, 2014	3.3	--	--	--	--	Pass	Pass
	6.6	--	--	--	--	Pass	Pass
March 12, 2014	3.3	--	--	--	--	Pass	Pass
	6.6	--	--	--	--	Pass	Pass
March 25, 2014	3.3	--	--	--	--	Pass	Pass
	6.6	--	--	--	--	Pass	Pass
September 8, 2014	3.3	--	--	--	--	Pass	Pass
	6.6	--	--	--	--	Pass	Pass
September 25, 2014	3.3	--	--	--	--	Pass	Pass
	6.6	--	--	--	--	Pass	Pass
April 20, 2015	3.3	--	--	--	--	Pass	Pass
	6.6	--	--	--	--	Pass	Pass
October 13, 2015	3.3	--	--	--	--	Pass	Pass
	6.6	--	--	--	--	Pass	Pass

This Order requires semiannual monitoring for chronic toxicity. Results shall be analyzed using the TST hypothesis testing approach in section V.B.6.a of the MRP. Compliance with this chronic toxicity limitation is demonstrated by rejecting the null hypothesis and reporting "Pass" or "P".

When the chronic toxicity test results in a "Fail" or "F," the Permittee must initiate accelerated monitoring as specified in the MRP (Attachment E, section V). After accelerated monitoring, if conditions of chronic toxicity are found to persist, the Permittee will be required to conduct a TRE, as described by the MRP.

Notification requirements for chronic WET testing include a 72-hour verbal notification requirement and a 14 day written report requirement, if test results indicate toxicity. The 14 day written notification is established in the U.S. EPA WET Guidance documents cited in the MRP. The 72-hour verbal notification requirement is being added to provide the Regional Water Board with knowledge of the toxicity in advance of the written report. The 72-hour requirement is intended to give the Permittee sufficient time to make a telephone

DRAFT

call to Regional Water Board staff and accounts for non-working days (e.g., weekends). Verbal notification of WET test exceedances may be left by voice mail if the Regional Water Board staff person is not immediately available by telephone.

This Order retains the requirement for the Permittee to conduct a screening test using at least one vertebrate, invertebrate, and plant species. After the screening test is completed, monitoring can be reduced to the most sensitive species.

Chronic WET limitations will be established if future monitoring results demonstrate that discharges from the Facility are causing or contributing to chronic toxicity in the receiving water.

D. Final Effluent Limitation Considerations

1. Anti-Backsliding Requirements

Sections 402(o) and 303(d)(4) of the CWA and federal regulations at 40 C.F.R. section 122.44(l) prohibit backsliding in NPDES permits. These anti-backsliding provisions require effluent limitations in a reissued permit to be as stringent as those in the previous permit, with some exceptions where limitations may be relaxed. All effluent limitations in this Order are at least as stringent as the effluent limitations in Order No. R1-2011-0019, except for ammonia and zinc and mass-based effluent limitations for oil and grease, copper, TCDD equivalents, bis(2-ethylhexyl) phthalate, tetrachloroethylene, and chlorine residual.

Order No. R1-2011-0019 established final effluent limitations for ammonia and zinc. As shown in Table F-5 of this Fact Sheet, effluent data demonstrate that the discharge no longer demonstrates reasonable potential to cause or contribute to an exceedance of the water quality objectives. The updated effluent data for ammonia and zinc constitutes new information, which permits the removal of effluent limitations consistent with CWA section 402(o)(2)(B). Therefore, the Order does not retain the effluent limitations for ammonia and zinc.

Order No. R1-2011-0019 established final mass-based effluent limitations for oil and grease, copper, TCDD equivalents, bis(2-ethylhexyl) phthalate, tetrachloroethylene, and chlorine residual. 40 C.F.R. section 122.45(f)(1)(ii) states that mass limitations are not required when applicable standards and limitations are expressed in terms of other units of measurement. The numerical effluent limitations for these pollutants established in this Order are based on the effluent limitations required by Table 1 and Table 2 of the Ocean Plan, which are expressed in terms of concentration. Pursuant to 40 C.F.R. section 122.45(f)(1)(ii), expressing the effluent limitations in terms of concentration is in accordance with federal regulations. Furthermore, the Ocean Plan does not require mass-based effluent limitations for Table 1 and Table 2 constituents. Mass limitations for these constituents for discharges of treated wastewater have been removed because the Regional Water Board staff misinterpreted the exception of 40 C.F.R. section 122.45(f)(1)(ii), which states that mass limitations are not required "when applicable standards and limitations are expressed in terms of other units of measure." The relaxation of effluent limitations for these constituents is permissible under CWA section 402(o)(2)(B)(ii) because Regional Water Board staff has determined that mass-based limitations for these constituents were applied in the previous permit as a result of a mistaken interpretation of law when issuing the previous permit.

Order No. R1-2011-0019 included more stringent average monthly and maximum daily effluent limitations for settleable solids than required in Table 2 of the Ocean Plan. These effluent limitations were retained from previous Order No. R1-2006-0001 based on BPJ. 40 C.F.R. section 125.3(a)(2) allows for establishment of technology-based effluent limitations based on BPJ for dischargers other than POTWs. For POTWs, 40 C.F.R. section

DRAFT

125.3(a)(1) and section 133 specify that technology-based effluent limitations must be based upon secondary treatment or equivalent to secondary treatment standards. Since the Facility is a POTW, the establishment of technology-based effluent limitations for settleable solids based on BPJ is not permissible under 40 C.F.R. section 125.3(a)(2). CWA Section 301(b) and 40 C.F.R. section 122.44(d) require that permits include limitations more stringent than applicable federal technology-based requirements where necessary to achieve applicable water quality standards. The Regional Water Board does not find that these limitations, which are more stringent than the applicable technology-based requirements in the Ocean Plan, are necessary to achieve applicable water quality standards. Therefore, this Order does not retain the more stringent average monthly and maximum daily effluent limitations from Order No. R1-2011-0019. The relaxation of effluent limitations for settleable solids is permissible under CWA section 402(o)(2)(B)(ii) because Regional Water Board staff has determined that technology-based effluent limitations for settleable solids were applied in the previous permit as a result of a mistaken interpretation of law when issuing the previous permit.

2. Antidegradation Policies

This Order is consistent with applicable federal and state antidegradation policies, as it does not authorize the discharge of increased concentrations of pollutants or increased volumes of treated wastewater beyond that which was permitted to discharge in accordance with Order No. R1-2011-0019.

3. Stringency of Requirements for Individual Pollutants

This Order contains both technology-based effluent limitations and WQBELs for individual pollutants. The technology-based effluent limitations consist of restrictions on BOD_5, oil and grease, pH, settleable solids, TSS, and turbidity. Restrictions on these pollutants are discussed in section IV.B of this Fact Sheet. This Order's technology-based pollutant restrictions implement section III.B, Table 2, of the Ocean Plan and the minimum, applicable federal technology-based requirements.

WQBELs have been derived to implement water quality objectives that protect beneficial uses. Both the beneficial uses and the water quality objectives have been approved pursuant to federal law and are the applicable federal water quality standards. Most beneficial uses and water quality objectives contained in the Basin Plan were approved under state law and submitted to and approved by U.S. EPA prior to May 30, 2000. Any water quality objectives and beneficial uses submitted to U.S. EPA prior to May 30, 2000, but not approved by U.S. EPA before that date, are nonetheless "*applicable water quality standards for purposes of the CWA*" pursuant to 40 C.F.R. section 131.21(c)(1). Collectively, this Order's restrictions on individual pollutants are no more stringent than required to implement the requirements of the CWA.

The Regional Water Board has considered the factors in Water Code section 13263, including the provisions of Water Code section 13241, in establishing these requirements.

E. Interim Effluent Limitations – Not Applicable

This Order does not establish interim effluent limitations or schedules for compliance with final limitations.

F. Land Discharge Specifications and Requirements – Not Applicable

This Order does not authorize discharges of waste to land.

G. Recycling Specifications

This Order includes recycled water production requirements in section IV.C of the Order, Water Recycling Specifications and Requirements contained in section IV.C. of the Order. The Permittee currently has no recycled water use sites. Prior to initiating recycled water use at recycled water use sites identified in the future, the Permittee must obtain permitting, either through a modification of this Order or by enrolling under State Water Board Order DWQ 2016-0068-DDW (or any subsequent revision) and submit a title 22 Recycled Water Engineering Report that has been approved by DDW.

1. Scope and Authority

Section 13263 of the Water Code requires the Regional Water Board to prescribe requirements for proposed discharges, existing discharges, or material change in an existing discharge based upon the conditions of the disposal area or receiving waters upon or into which the discharge is made or proposed. The prescribed requirements shall implement any relevant water quality control plans that have been adopted, and shall take into consideration the beneficial uses to be protected, the water quality objectives reasonably required for that purpose, other waste discharges, the need to prevent nuisance, and the provisions of Water Code section 13241. In prescribing requirements, the Regional Water Board is not obligated to authorize the full waste assimilation capacities of the receiving water.

Water Code section 13241 requires the Regional Water Board to establish water quality objectives in water quality control plans as in its judgment will ensure the reasonable protection of beneficial uses and prevention of nuisance, recognizing that it may be possible for the quality of water to be changed to some degree without unreasonably affecting beneficial uses. The Basin Plan establishes water quality objectives specific to the North Coast Region for the protection of past, present, and probable future beneficial uses of water. Factors required for consideration during development of applicable water quality objectives, such as the characteristics of the hydrographic unit under consideration, economic considerations, and other factors required in accordance with section 13241 were considered during the Basin Planning and adoption process.

Here, the Regional Water Board considered all of these factors when developing waste discharge requirements for the recycled water discharge. Limitations for BOD_5, TSS, total coliform, and pH were derived based upon the treatment capability of the Facility in order to implement water quality objectives that protect the beneficial uses of both surface and groundwater. Both beneficial uses and the water quality objectives have been approved pursuant to state law, and then submitted to and approved by U.S. EPA. In addition, discharge prohibitions were included to prohibit the reclamation use of untreated or partially treated wastewater.

The Regional Water Board considered the factors set forth in Water Code section 13241, including the consideration of past, present, and probable future beneficial uses of the receiving water, which the Regional Water Board anticipates to be the same as set forth in the Basin Plan. The Regional Water Board considered the environmental characteristics, including water quality of the Smith River Hydrologic Unit, the coordinated control of all factors, which affect water quality in the area, and the need to develop and use recycled water, which this Order supports. The Permittee did not submit any evidence regarding whether the waste discharge requirements for recycled water discharges would interfere with the development of needed housing within the region or the costs of compliance, particularly anything to show that the costs of compliance with the Order would be unmanageable.

DRAFT

2. **Applicable Beneficial Uses and Water Quality Criteria and Objectives**

   a. **Beneficial Uses.** Beneficial use designations for groundwater established in the Basin Plan include MUN, AGR, IND, and PRO.

   b. **Basin Plan Water Quality Objectives.** The Basin Plan contains narrative objectives for tastes and odors, bacteria, radioactivity, and chemical constituents (including those chemicals that adversely affect agricultural water supply) that apply to groundwater.

3. **Determining the Need for Requirements for Water Recycling**

   Section IV.C. of this Order contains Water Recycling Specifications and Requirements to ensure that recycled water is used in a manner that is protective of groundwater and surface water quality. The Water Recycling Specifications and Requirements are established in this Order to conform to requirements contained in title 22, division 4, chapter 3 of the CCR for recycled water use of disinfected tertiary-2.2 recycled water. The Permittee is required to comply with applicable state and local requirements regarding the production and use of recycled wastewater, including requirements of Water Code sections 13500 – 13577 (Water Reclamation) and DDW regulations at title 22, sections 60301 – 60357 of the CCR (Water Recycling Criteria).

   The Water Recycling Specifications and Requirements are established in this Order to conform to requirements contained in title 22, division 4, chapter 3 of the CCR for the recycled water use of disinfected tertiary effluent. Specific water recycling requirements are enumerated in section IV.C of this Order. The requirement to comply with title 22 requirements is retained from Order No. R-2011-0019.

   a. **BOD_5 and TSS.** This Order establishes new discharge limitations for BOD_5 and TSS based on technology-based effluent limitations that consist of a monthly average of 10 mg/L and a weekly average of 15 mg/L. These levels are technically achievable based on the capability of the wastewater treatment system. These limits are included in the Order to ensure that discharges to the recycled water system receive proper treatment.

   b. **Coliform Bacteria.** Consistent with Order No. R1-2011-0019, this Order includes recycling specifications for coliform bacteria that reflect standards for tertiary treated recycled water adopted by the DDW in title 22 of the CCR and are included to ensure that recycled water quality is protective of human health. Recycled water from this Facility meets the highest title 22 treatment and disinfection standards and is suitable for the broad range of recycled water uses identified in title 22, including urban land uses.

   c. **pH.** This Order establishes new instantaneous minimum and maximum effluent limitations for pH of 6.0 and 9.0, respectively, based on the technology-based effluent limitations required by U.S. EPA pursuant to 40 C.F.R. part 133. These pH limitations are included in the Order to ensure that pH levels are appropriate for protection of groundwater when discharging to the recycled water system.

4. **Satisfaction of Antidegradation Policy**

   The permitted discharge is consistent with the antidegradation provisions of State Water Board Resolution No. 68-16. This Order does not provide for an increase in the volume and mass of pollutants discharged. The discharge will not have significant impacts on the beneficial uses of groundwater because the Order does not authorize the discharge of treated wastewater to groundwater.

G. Other Requirements

DRAFT

The Order contains additional specifications that apply to the Facility when discharging to the recycled water system, including:

1. **Filtration System Requirements.** The turbidity requirement in section IV.D.1.b of the Order are in accordance with the definition of filtered wastewater found in title 22 section 60301.320 of the CCR. The title 22 definition is used as a reasonable performance standard to ensure adequate removal of turbidity upstream of disinfection facilities. Properly designed and operated effluent filters will meet this standard. The point of compliance for the turbidity requirements is a point following filtration and before discharge to the UV disinfection system.

2. **Disinfection Process Requirements for the UV Disinfection System.** The Order contains monitoring requirements for the UV disinfection system in section IV.D.2. These requirements are needed to determine compliance with requirements for recycled wastewater systems, established at CCR title 22, division 4, chapter 3 and to ensure that the disinfection process achieves effective pathogen reduction. Prior to initiation of any water recycling, the Permittee must complete an evaluation of the UV disinfection system to demonstrate that it meets the requirement in title 22, section 60301.230(a)(2) that the disinfection process, when combined with the filtration process, inactivates and/or removes 99.999 percent of the plaque-forming units of F-specific bacteriophage MS2, or polio virus in the wastewater.

   UV system operation requirements are necessary to ensure that adequate UV dosage is applied to the wastewater to inactivate pathogens (e.g., viruses, bacteria) in the wastewater. UV dosage is dependent on several factors such as UV transmittance, UV power setting, and wastewater flow through the UV system. Minimum dosage requirements are based on recommendations by DDW and guidelines established by the National Water Research Institute (NWRI) and American Water Works Association Research (AWWARF) "Ultraviolet Disinfection Guidelines for Drinking Water and Water Reuse" first published in December 2000 revised as a Third Edition dated August 2012 (NWRI/AWWARF UV Disinfection Guidelines). Furthermore, a Memorandum dated November 1, 2004 issued by DDW to Regional Water Board Executive Officers recommended that provisions be included in permits for water recycling treatment plants employing UV disinfection requiring permittees to establish fixed cleaning frequency of quartz sleeves as well as include provisions that specify minimum delivered UV dose that must be maintained (as recommended by the NWRI/AWWARF UV Disinfection Guidelines). Minimum UV dosage requirements specified in section IV.D.2 of the Order ensures that adequate disinfection of wastewater will be achieved.

   Section IV.C.4.o of the Order restricts the flow of discharges to the recycled water system. Based upon the equations developed, at the highest flow of 830 gallons per minute (gpm), one reactor cannot provide the required UV dose if the UV transmittance (UVT) drops below 78 percent. A third UV reactor is needed to address all operational conditions, including any flow up to 830 gpm and any UVT down to 65%, while still providing adequate redundancy. The NWRI/AWWARF UV Disinfection Guidelines state, "*At a minimum, two reactors must be simultaneously operated in any on-line reactor train*." It continues by requiring a redundant reactor in a single treatment train, "*Standby UV equipment must be provided: A standby reactor per train.* [OR] *A standby reactor train.*" Further the NWRI/AWWARF UV Disinfection Guidelines state the system must be capable of applying the required dose "with any failed or out-of-service reactor." Examples include failure of the power supply, cleaning mechanism, cooling system, SCADA system, or a damaged UV intensity sensor. Until this reliability issue is sufficiently addressed, this Order restricts the flow to the recycled water system to 0.6 mgd, which is one-half of the design flow of the 1.2 mgd.

DRAFT

V. RATIONALE FOR RECEIVING WATER LIMITATIONS

A. Surface Water

CWA section 303(a-c) requires states to adopt water quality standards, including criteria where they are necessary to protect beneficial uses. The State Water Board adopted water quality criteria as water quality objectives in the Ocean Plan. Receiving water limitations within this Order reflect all applicable, general water quality objectives of the Ocean Plan.

The Ocean Plan includes numeric and narrative water quality objectives for various beneficial uses. This Order contains receiving water limitations for discharges to the Pacific Ocean based on the Ocean Plan numerical and narrative water quality objectives for bacteria, dissolved oxygen, floating particulates, oil and grease, pH, discoloration, natural lighting, deposition of solids, dissolved sulfides, organic materials in sediments, Table 1 parameters, nutrient materials, radioactive wastes, and biological characteristics.

B. Groundwater

1. The beneficial uses of the underlying groundwater are municipal and domestic supply, industrial service supply, industrial process supply, agricultural supply, and freshwater replenishment to surface waters.
2. Groundwater limitations are required to protect the beneficial uses of the underlying groundwater.
3. Discharges from the Facility shall not cause exceedance of applicable water quality objectives or create adverse impacts to beneficial uses of groundwater.
4. The Basin Plan requires that waters designated for use as MUN shall not contain concentrations of chemical constituents in excess of the limits specified in CCR, title 22, division 4, chapter 15, article 4.1, section 64435, and article 5.5, section 64444.

VI. RATIONALE FOR PROVISIONS

A. Standard Provisions

1. Federal Standard Provisions

Standard Provisions, which apply to all NPDES permits in accordance with 40 C.F.R. section 122.41, and additional conditions applicable to specified categories of permits in accordance with 40 C.F.R. section 122.42, are provided in Attachment D to the Order. The Permittee must comply with all standard provisions and with those additional conditions that are applicable under 40 C.F.R. section 122.42. The rationale for the special conditions contained in the Order is provided in section VI.B, below.

Sections 122.41(a)(1) and (b) through (n) of 40 C.F.R. establish conditions that apply to all state-issued NPDES permits. These conditions must be incorporated into the permits either expressly or by reference. If incorporated by reference, a specific citation to the regulations must be included in the Order. Section 123.25(a)(12) allows the state to omit or modify conditions to impose more stringent requirements. In accordance with 40 C.F.R. section 123.25, this Order omits federal conditions that address enforcement authority specified in 40 C.F.R. sections 122.41(j)(5) and (k)(2) because the enforcement authority under the Water Code is more stringent. In lieu of these conditions, this Order incorporates by reference Water Code section 13387(e).

2. Regional Water Board Standard Provisions

In addition to the Federal Standard Provisions (Attachment D), the Permittee shall comply with the Regional Water Board Standard Provisions provided in Standard Provisions VI.A.2 of the Order.

DRAFT

a. Order Provision VI.A.2.a identifies the state's enforcement authority under the Water Code, which is more stringent than the enforcement authority specified in the federal regulations (e.g., 40 C.F.R. sections 122.41(j)(5) and (k)(2)).

b. Order Provision VI.A.2.b requires the Permittee to notify Regional Water Board staff, orally and in writing, in the event that the Permittee does not comply or will be unable to comply with any Order requirement. This provision requires the Permittee to make direct contact with a Regional Water Board staff person.

B. Special Provisions

1. Reopener Provisions

a. Standard Revisions (Special Provision VI.C.1.a). Conditions that necessitate a major modification of a permit are described in 40 C.F.R. section 122.62, which include the following:

i. When standards or regulations on which the permit was based have been changed by promulgation of amended standards or regulations or by judicial decision. Therefore, if revisions of applicable water quality standards are promulgated or approved pursuant to Section 303 of the CWA or amendments thereto, the Regional Water Board will revise and modify this Order in accordance with such revised standards.

ii. When new information that was not available at the time of permit issuance would have justified different permit conditions at the time of issuance.

b. Reasonable Potential (Special Provision VI.C.1.b). This provision allows the Regional Water Board to modify, or revoke and reissue, this Order if present or future investigations demonstrate that the Permittee governed by this Permit is causing or contributing to excursions above any applicable priority pollutant criterion or objective, or adversely impacting water quality and/or the beneficial uses of receiving waters.

c. Whole Effluent Toxicity (Special Provision VI.C.1.c). This Order requires the Permittee to investigate the causes of, and identify corrective actions to reduce or eliminate effluent toxicity through a TRE. This Order may be reopened to include a numeric acute and/or chronic toxicity limitation, and/or a limitation for a specific toxicant identified in the TRE.

d. 303(d)-Listed (Special Provision VI.C.1.d). This provision allows the Regional Water Board to reopen this Order to modify existing effluent limitations or add effluent limitations for pollutants that are subject of any future TMDL action.

e. Zone of Initial Dilution/Mixing Zone. This provision allows the Regional Water Board to reopen this Order to modify effluent limitations based on a revised minimum initial dilution based on the results of an effluent discharge evaluation.

2. Special Studies and Additional Monitoring Requirements

a. Effluent Discharge Evaluation (Special Provision VI.C.2.a). In the preparation of this Order, Regional Water Board staff identified inconsistencies in the file and a lack of documentation regarding previous permit decisions regarding the dilution ratio that the Permittee's outfall achieves.

Prior to 2006, Orders for the Facility allowed for an initial dilution of 50:1 based on a 1982 dye study. In previous Order No. R1-2006-0001, the Regional Water Board described a re-evaluation of the mixing zone and initial dilution that included a modeling of mixing resulting from wave action within the rocky slot to which the

DRAFT

Facility discharges using median dominant wave period measured by the National Oceanic and Atmospheric Administration (NOAA). Based on the results of this modeling, Order Nos. R1-2006-0001 and R1-2011-0019 utilized a revised initial dilution of 29:1. The Regional Water Board file record does not include written documentation of this re-evaluation. In addition, the Ocean Plan does not allow for consideration of wave or wind action when considering mixing. Specifically, section III.C.4.d of the Ocean Plan states, "*For the purpose of this Plan, minimum initial* dilution is the lowest average initial* dilution within any single month of the year. Dilution estimates shall be based on observed waste flow characteristics, observed receiving water* density structure, <u>and the assumption that no currents, of sufficient strength to influence the initial* dilution process, flow across the discharge structure</u>*." The most recent modeling results, based on wave action, is not consistent with the requirements of the Ocean Plan.

The Crescent City Harbor District seafood processing plant formerly shared the outfall with the Facility, but disconnected from the outfall in 2011. The most recent modeling was based on an effluent flow of 6.92 mgd, which represented the sum of effluent flows from the seafood processing plant of 0.8 mgd and the peak wet weather flow capacity of the Facility of 6.12 mgd.

The most recent model was calibrated against observations during the 1982 dye study. The ROWD indicates that a second 24-inch diameter pipeline was constructed in 2005. It is unclear if this was considered in the model for the 2006 permit, or how this would affect the 1982 dye study results, which were used to calibrate the 2006 model.

Furthermore, the Regional Water Board file record includes an August, 1999 report titled *Mixing Zone Study Report for the Existing Municipal Discharge from Crescent City, California to the Pacific Ocean*. This 1999 study used a CORMIX model to predict the expected dilutions at the zone of initial dilution boundary under various effluent flow and tidal conditions and concluded that under average effluent flow conditions, dilutions of 3.8 to 6.7 are predicted at the ZID boundary, depending on tidal water depth. The file record does not include any documentation to indicate why the results of this study were not considered in the permits adopted in 2000, 2006, and 2011. The report included recommendations that additional receiving water data be collected to reduce model uncertainties and that outfall performance could be enhanced with an outfall extension to deeper water in order to provide a larger water column through which the plume could rise and create greater dilution.

Based on the issues identified above, this Order requires the Permittee to conduct an evaluation of its effluent discharge to determine the appropriate minimum initial dilution, identify whether any modifications to the outfall are necessary, and to evaluate whether other discharge options could be implemented as part of the Facility discharge plan to achieve full compliance with Ocean Plan requirements. In accordance with the Ocean Plan, the dilution estimates must be based on observed waste flow characteristics, observed receiving water density structure, and the assumption that no currents, of sufficient strength to influence the initial dilution process, flow across the discharge structure. If a new mixing zone study is conducted, the Permittee shall utilize an appropriate modeling application (e.g., Visual Plumes, CORMIX, etc.) to conduct the study.

b. Source Control and Pretreatment Studies (Special Provision VI.C.2.b)

i. Local Limits Evaluation (Special Provision VI.C.2.b.i). As discussed further in section VI.B.5.b of this Fact Sheet, this Order requires the Permittee to implement a pretreatment program that conforms to federal regulations. Thus, in order to

prevent interference with the POTW or pass through of pollutants to the receiving water, this Order requires the Permittee to conduct a local limits evaluation and review and update, if necessary, their sewer use ordinances. The Permittee conducted an evaluation during the term of the previous permit and developed a local limits development work plan, dated September 23, 2013. The Permittee did not implement the work plan because Regional Water Board staff did not provide comments or a letter of concurrence. The Permittee could update the September 23, 2013, work plan and use it to meet requirements under this Order.

ii. **Updated Sewer Use Ordinance (Special Provision VI.C.2.b.ii).** This Order requires the Permittee to evaluate the effectiveness of sewer use ordinances and update requirements as necessary to ensure the ordinances are applicable and enforceable thereby preventing interference with the POTW or pass through of pollutants to the receiving water.

c. **Climate Change Readiness Study Plan (Special Provision VI.C.2.c).** Extreme weather events, sea level rise, shifting precipitation patterns and temperature variability, all intensified by climate change, have significant implications for wastewater treatment and operations. In order to ensure that Facility operations are not disrupted, compliance with conditions of this Order are achieved, and receiving waters are not adversely impacted by permitted and unpermitted discharges, this Order requires the Permittee to submit a Climate Change Readiness Study Plan.

3. **Best Management Practices and Pollution Prevention**

a. **Pollutant Minimization Program (Special Provision VI.C.3.a).** This provision is included in this Order pursuant to section III.C.9 of the Ocean Plan. The Regional Water Board includes standard provisions in all NPDES permits requiring development of a Pollutant Minimization Program when there is evidence that a toxic pollutant is present in the effluent at a concentration greater than an applicable effluent limitation.

4. **Construction, Operation, and Maintenance Specifications**

a. **Operation and Maintenance (Special Provision VI.C.4.a and VI.C.4.b).** 40 C.F.R. section 122.41(e) requires proper operation and maintenance of permitted wastewater systems and related facilities to achieve compliance with permit conditions. An up-to-date operation and maintenance manual, as required by Provision VI.C.4.b of this Order, is an integral part of a well-operated and maintained facility.

b. **Septage Handling Requirements (Special Provision VI.C.4.c).** The Permittee was not permitted to accept or treat septage at the Facility in the previous permit, but is contemplating whether to develop a program for receiving septage into the Facility to satisfy the need for local septage disposal. Domestic septage is defined as the liquid or solid material removed from a septic tank, cesspool, portable toilet, type III marine sanitation device, recreational vehicle's sanitation tank, or similar storage or treatment works that receives only domestic septage. Septage is characterized by high organic strength, high solids content, high odor potential, high vector attraction potential, and high potential to pollute groundwater. Septage may be 6 to 80 times more concentrated than typical municipal wastewater and may also contain heavy metals and illicitly dumped hazardous materials. Septage has the potential to upset plant treatment operations or process performance or both if the plant is not designed to handle septage. Some of the impacts of septage addition to facilities include: potential toxic shock to biological processes; increased odor emissions; increased volume of grit, scum, screenings, and sludge; increased organic loading to biological processes; and increased housekeeping requirements. Prior to accepting septage, this Order requires

DRAFT

the Permittee to submit a Septage Management Plan for approval by the Regional Water Board Executive Officer. This Order also requires the Permittee to manage septage accepted at the Facility in a manner that ensures that pollutants associated with domestic septage do not pass through or interfere with the operation or performance of the Facility.

5. Special Provisions for Municipal Facilities (POTWs Only)

a. Wastewater Collection Systems (Special Provision VI.C.5.a)

i. Statewide General WDRs for Sanitary Sewer Systems. On May 2, 2006, the State Water Board adopted General Waste Discharge Requirements for Sanitary Sewer Systems, Water Quality Order No. 2006-0003-DWQ (General Order). The General Order requires public agencies that own or operate sanitary sewer systems with greater than 1 mile of pipes or sewer lines to enroll for coverage under the General Order. The General Order requires agencies to develop sanitary sewer management plans (SSMPs) and report all SSOs, among other requirements and prohibitions. The Permittee has enrolled under the General Order as required.

On February 20, 2008, the State Water Board adopted Order No. WQ 2008-0002-EXEC Adopting Amended Monitoring and Reporting Requirements for Statewide General Waste Discharge Requirements for Statewide General Waste Discharge Requirements for Sanitary Sewer Systems, to ensure adequate and timely notifications are made to the Regional Water Board and appropriate local, state, and federal authorities in case of sewage spills. On August 6, 2013, the State Water Board adopted Order No. WQ 2013-0058-EXEC Amending Monitoring and Reporting Program for Statewide General Waste Discharge Requirements for Sanitary Sewer Systems. Order No. WQ 2013-0058-EXEC addressing compliance and enforceability of the Monitoring and Reporting Program and superseding the amendments in Order No. WQ-2008-0002-EXEC. Notification and reporting of SSOs is conducted in accordance with the requirements of Order Nos. 2006-0003-DWQ and WQ 2013-0058-EXEC, and any revisions thereto for operation of its wastewater collection system.

b. Pretreatment of Industrial Waste (Special Provision VI.C.5.b). Section 402(b)(8) of the CWA requires that POTWs receiving pollutants from significant industrial sources subject to section 307(b) standards establish an industrial pretreatment program to ensure compliance with these standards. The implementing regulations at 403.8(a) state, "*any POTW (or combination of POTWs operated by the same authority) with a total design flow greater than 5 million gallons per day (mgd) and receiving from industrial users pollutants which pass through or interfere with the operation of the POTW or are otherwise subject to pretreatment standards will be required to establish a POTW pretreatment program unless the NPDES State exercises its option to assume local responsibilities as provided in 403.10(e).*" The Facility receives industrial wastewater from one non-categorical significant industrial user (Rumiano Cheese Company). Consistent with Order No. R1-2011-0019, this Order requires the Permittee to comply with pretreatment standards as described in section 307(b) of the CWA and section 403.8(a).

c. Sludge Disposal and Handling Requirements (Special Provision VI.C.5.c). The disposal or reuse of wastewater treatment screenings, sludges, or other solids removed from the liquid waste stream is regulated by 40 C.F.R. parts 257, 258, 501, and 503, and the State Water Board promulgated provisions of title 27 of the CCR. Sludge generated at the Facility is currently disposed of in a landfill.

DRAFT

This provision also requires the Permittee to comply with the state's regulations relating to the discharge of biosolids to the land. The discharge of biosolids through land application is not currently regulated under this Order. In the event that the Permittee wishes to discharge biosolids to land, the Permittee is required to either submit a report of waste discharge or dispose of biosolids at another permitted facility.

d. **Operator Certification (Special Provision VI.C.5.d).** This provision requires the Facility to be operated by supervisors and operators who are certified as required by title 23, section 3680 of the CCR.

e. **Adequate Capacity (Special Provision VI.C.5.e).** The goal of this provision is to ensure appropriate and timely planning by the Permittee to ensure adequate capacity for the protection of public health and water quality.

6. Other Special Provisions

a. **Storm Water (Special Provision VI.C.6.a).** This provision requires the Permittee, if applicable, to obtain coverage under the State Water Board's Water Quality Order No. 2014-0057-DWQ, NPDES General Permit No. CAS000001, General Permit for Storm Water Discharges Associated with Industrial Activities (or subsequent renewed versions of the NPDES General Permit CAS000001). Currently, the Facility is exempted from these requirements because all storm water is captured and treated and/or disposed of within the Facility's NPDES permitted process wastewater.

7. Compliance Schedules – Not Applicable

This Order does not establish interim effluent limitations or schedules of compliance for final numeric effluent limitations.

VII. RATIONALE FOR MONITORING AND REPORTING REQUIREMENTS

Section 122.48 of 40 C.F.R. requires that all NPDES permits specify requirements for recording and reporting monitoring results. Water Code section 13383 authorizes the Regional Water Board to require technical and monitoring reports. The MRP, Attachment E, establishes monitoring and reporting requirements that implement federal and state requirements. The following provides the rationale for the monitoring and reporting requirements contained in the MRP for this Facility.

A. Influent Monitoring

1. Monitoring requirements for BOD_5 and TSS are necessary to determine compliance with the Order's 85 percent removal requirement for these parameters. Order No. R1-2011-0019 required twice weekly influent monitoring for BOD_5 and TSS, but allowed for a reduction to weekly monitoring based on the results of the first 12 months of monitoring. A review of influent BOD_5 and TSS data collected between July 2011 and November 2015 shows that there is generally minimal variability over the course of a week. In addition, as shown in Table F-2 of this Fact Sheet, based on the results of twice weekly monitoring conducted between July 2011 and November 2015, the Facility was consistently in compliance with the applicable effluent limitations for BOD_5 and TSS. Therefore, this Order allows for a reduction of the influent monitoring frequency for BOD_5 and TSS to weekly.

2. This Order establishes an influent flow monitoring requirement to determine compliance with Prohibition III.H.

3. This Order establishes influent monitoring requirements for priority pollutants to satisfy U.S. EPA pretreatment requirements.

DRAFT

B. Effluent Monitoring

1. Effluent monitoring requirements are necessary to determine compliance with prohibitions and/or effluent limitations established by the Order. Monitoring at Monitoring Location EFF-001 is necessary to demonstrate compliance with effluent limitations and demonstrate whether or not the discharge poses reasonable potential for a pollutant to exceed any numeric or narrative water quality objectives for discharges to the Pacific Ocean.

a. Effluent monitoring requirements for flow, settleable solids, oil and grease, turbidity, pH, ammonia, copper, total chlorine residual, bis(2-ethylhexyl) phthalate, TCDD equivalents, and tetrachloroethylene have been retained from Order No. R1-2011-0019.

b. Monitoring requirements for BOD_5 and TSS are necessary to determine compliance with effluent limitations for these parameters. Order No. R1-2011-0019 required twice weekly effluent monitoring for BOD_5 and TSS, but allowed for a reduction to weekly monitoring based on the results of the first 12 months of monitoring. As shown in Table F-2 of this Fact Sheet, based on the results of twice weekly monitoring conducted between July 2011 and November 2015, the Facility was consistently in compliance with the applicable effluent limitations for BOD_5 and TSS. Therefore, this Order allows for a reduction of the effluent monitoring frequency for BOD_5 and TSS to weekly.

c. Monitoring requirements for fecal coliform are necessary to determine compliance with fecal coliform effluent limitations. Order No. R1-2011-0019 required twice weekly effluent monitoring for fecal coliform. As shown in Table F-2 of this Fact Sheet, based on the results of twice weekly monitoring conducted between July 2011 and November 2015, the Facility had three violations of the fecal coliform effluent limitation. This is a small number of violations over a 5 year term, therefore, the twice weekly monitoring frequency has been reduced to weekly with the additional requirement that if two consecutive weekly fecal coliform results exceeds the effluent limitation, accelerated monitoring must be implemented. The accelerated monitoring requirement for parameters required to be sampled weekly is defined in Footnote 3 of Table E-4 and consists of two samples per week for the 2 weeks following the second exceedance.

d. Monitoring data collected during the term of Order No. R1-2011-0019 indicates that the discharge does not exhibit reasonable potential to cause or contribute to an exceedance of the Ocean Plan water quality objectives for zinc. Therefore, this Order discontinues monthly effluent monitoring requirements for zinc from Order No. R1-2011-0019.

e. Monitoring data collected over the term of Order No. R1-2011-0019 demonstrated that the discharge exhibits reasonable potential to cause or contribute to an exceedance of water quality criteria for nickel and dieldrin. Therefore, this Order establishes new monitoring requirements for nickel and dieldrin to determine compliance with applicable effluent limitations.

f. Consistent with Order No. R1-2011-0019, effluent monitoring requirements for Ocean Plan Table 1 pollutants is required annually to generate adequate data to perform an RPA.

g. This Order establishes annual effluent monitoring requirements for priority pollutants to satisfy U.S. EPA pretreatment requirements. Since the U.S. EPA CWA section 307(a) list of pollutants has some of the same pollutants that are in Ocean Plan Table 1, this Order does not require duplicative monitoring.

DRAFT

C. Whole Effluent Toxicity Testing Requirements

Whole effluent toxicity (WET) monitoring requirements are established for discharges to the Pacific Ocean from Discharge Point 001 at Monitoring Location EFF-001 and are included in the Order to protect the receiving water quality from the aggregate effect of a mixture of pollutants in the effluent. Acute toxicity testing measures mortality in 100 percent effluent over a short test period and chronic toxicity testing is conducted over a longer time period and may measure mortality, reproduction, and/or growth. The Ocean Plan (section III.C.4.c.(4)) requires only chronic testing where the minimum initial dilution of the effluent is below 100:1. Because this Order allows for a Dm of 29 for the Facility, WET monitoring shall consist of chronic toxicity testing. This Order includes monitoring requirements for chronic toxicity to assess whether there is reasonable potential to exceed the Ocean Plan's narrative water quality objectives for toxicity. Consistent with Order No. R1-2011-0019, this Order requires semiannual chronic toxicity testing.

In addition to routine toxicity monitoring, this Order requires the Permittee to maintain and update their TRE Work Plan, in accordance with appropriate U.S. EPA guidance to ensure that the Permittee has a plan to immediately move forward with the initial tiers of a TRE in the event effluent toxicity is encountered in the future. The TRE is initiated by evidence of a pattern of toxicity demonstrated through the additional effluent monitoring provided as a result of an accelerated monitoring program.

D. Recycling Monitoring Requirements

This Order requires that the Permittee comply with applicable state and local requirements regarding the production of recycled wastewater. Recycled water monitoring requirements for flow, total coliform bacteria, and nitrate have been retained from Order No. R1-2011-0019.

Section 13523.1(b)(4) of the Water Code requires quarterly recycled water reporting.

The Order includes several new recycled water monitoring requirements including:

1. When discharging recycled water to the recycled water system, the Permittee must monitor its treated effluent for BOD_5, TSS, pH, and total coliform bacteria to demonstrate compliance with water recycling specifications in section IV.C.1 of the Order. If the Permittee is discharging concurrently to the ocean and to the recycled water system, the same sample may satisfy monitoring and reporting requirements for both discharge points.
2. Recycled water monitoring requirements for nitrite, ammonia and organic nitrogen have been added (and nitrate retained from previous permit) for the purpose of determining the total nitrogen concentration for the agronomic rate calculations that will be required for use of recycled water.

E. Receiving Water Monitoring

1. Surface Water

a. Receiving water monitoring is required to demonstrate compliance with the Receiving Water Limitations.

b. Consistent with Order No. R1-2011-0019, this Order requires weekly monitoring for fecal coliform bacteria, total coliform bacteria, and Enterococcus bacteria at Monitoring Location RSW-001. This Order establishes weekly monitoring for nitrate and monthly monitoring for total dissolved solids (TDS).

F. Groundwater Discharge Monitoring Requirements – Not Applicable

This Order does not require groundwater monitoring at this time.

DRAFT

G. Other Monitoring Requirements

1. Discharge Monitoring Report Quality Assurance (DMR-QA) Study Program

Under the authority of section 308 of the CWA (33 U.S.C. § 1318), U.S. EPA requires major permittees under the NPDES Program to participate in the annual DMR-QA Study Program. The DMR-QA Study evaluates the analytical ability of laboratories that routinely perform or support self-monitoring analyses required by NPDES permits. There are two options to satisfy the requirements of the DMR-QA Study Program: (1) The Discharger can obtain and analyze a DMR-QA sample as part of the DMR-QA Study; or (2) Per the waiver issued by U.S. EPA to the State Water Board, the Discharger can submit the results of the most recent Water Pollution Performance Evaluation Study from its own laboratories or its contract laboratories. A Water Pollution Performance Evaluation Study is similar to the DMR-QA Study. Thus, it also evaluates a laboratory's ability to analyze wastewater samples to produce quality data that ensure the integrity of the NPDES Program. The Discharger shall ensure that the results of the DMR-QA Study or the results of the most recent Water Pollution Performance Evaluation Study are submitted annually to the State Water Board. The State Water Board's Quality Assurance Program Officer will send the DMR-QA Study results or the results of the most recent Water Pollution Performance Evaluation Study to U.S. EPA's DMR-QA Coordinator and Quality Assurance Manager.

2. **Accelerated Monitoring Requirements.** Table E-4 includes accelerated monitoring requirements for parameters that are required to be monitored daily, weekly, monthly, and annually.

3. **Outfall Inspection.** Consistent with Order No. R1-2011-0019, this Order requires the Permittee to inspect the outfall location to determine the structural integrity and operational status of the outfall structure annually during the term of the permit. This requirement is necessary to demonstrate proper operation and maintenance of the POTW as required by 40 C.F.R. section 122.4, and to ensure that the calculated minimum probable initial dilution is not compromised as a result of unanticipated structural or operational changes in the outfall structure.

4. **Biological Survey.** Consistent with Order No. R1-2011-0019, this Order requires the Permittee to perform a biological survey of the outfall location once every 5 years.

5. **Filtration Process Requirements (Monitoring Locations INT-001A and INT-001B).** Monitoring of the surface loading rate at Monitoring Location INT-001A is necessary to demonstrate compliance with technology requirements set forth in DDW's Alternative Treatment Technology Report for Recycled Water (September 2014 or subsequent). Monitoring of effluent turbidity of the tertiary filters at Monitoring Location INT-001B is required to demonstrate compliance with section 60301.320 of title 22 CCR filtration requirements for disinfected tertiary recycled water.

6. **Disinfection Process Monitoring for UV Disinfection System (Monitoring Location INT-002).** UV disinfection system monitoring requirements at Monitoring Location INT-002 are included to assess compliance of the UV disinfection system with title 22 and the NWRI/AWWARF UV Disinfection Guidelines. These requirements apply if and when the Permittee establishes recycled water use site(s).

7. **Sludge Monitoring (Monitoring Location BIO-001).** New sludge monitoring requirements at Monitoring Location BIO-001 serve as a basis for the Permittee to develop the Sludge Handling and Disposal Activity Report that is required as part of the Annual Report pursuant to section X.D.2.f of the MRP. In addition, This Order establishes annual sludge monitoring requirements for priority pollutants to satisfy U.S. EPA pretreatment requirements.

DRAFT

8. **Septage Station Monitoring.** The Permittee does not currently accept or treat septage at the Facility, but is contemplating whether to develop a program for receiving septage at the Facility to satisfy the need for local septage disposal. This Order includes monitoring requirements to characterize discharges of septage into the treatment system and to ensure that pollutants associated with domestic septage do not pass through or interfere with the operation or performance of the Facility. These requirements apply if and when the Permittee establishes a septage receiving program.

9. **Notification and Reporting for Recycled Water Spills.** Section X.E of the MRP includes reporting requirements for spills of tertiary treated water in excess of 50,000 gallons. This requirement implements Water Code section 13529.2.

10. **Flow Monitoring.** Section I.D of the MRP requires proper installation, calibration, operation, and maintenance of flow metering devices.

H. Reporting Requirements

The reporting frequency has been changed from monthly to quarterly for routine influent, effluent, and recycled water monitoring. The Permittee is still required to perform monitoring at the frequencies specified in the MRP, but will submit reports quarterly. The reduced reporting frequency is intended to improve reporting efficiency. Although Regional Water Board staff will receive monitoring reports less frequently, the Order retains the requirement for the Permittee to notify Regional Water Board staff within 24-hours any non-compliance issues that may result in a significant threat to human health or the environment.

VIII. PUBLIC PARTICIPATION

The California Regional Water Quality Control Board, North Coast Region (Regional Water Board) has considered the issuance of waste discharge requirements (WDRs) that will serve as a National Pollutant Discharge Elimination System (NPDES) permit for the City of Crescent City, Wastewater Treatment Facility. As a step in the WDR adoption process, the Regional Water Board staff has developed tentative WDRs and has encouraged public participation in the WDR adoption process.

A. Notification of Interested Parties

The Regional Water Board notified the Permittee and interested agencies and persons of its intent to prescribe waste discharge requirements for the discharge and provided an opportunity to submit written comments and recommendations. Notification was provided through the following posting on the Regional Water Board's Internet site at: http://www.waterboards.ca.gov/northcoast/public_notices/public_hearings/npdes_permits_and_wdrs.shtml and through publication in the Press Democrat on September 28, 2016 and the Del Norte Triplicate on September 29, 2016**.**

B. Written Comments

Interested persons were invited to submit written comments concerning these tentative WDRs as provided through the notification process. Comments were due to the Regional Water Board Executive Office electronically via e-mail to NorthCoast@waterboards.ca.gov or on disk (CD or DVD) in Portable Document Format (PDF) file in lieu of paper-sourced documents. The guidelines for electronic submittal of documents can be found on the Regional Water Board website at http://www.waterboards.ca.gov/northcoast.

To be fully responded to by staff and considered by the Regional Water Board, the written comments were due at the Regional Water Board office by 5:00 p.m. on **October 28, 2016.**

C. Public Hearing

The Regional Water Board held a public hearing on the draft WDRs during its regular Board meeting on the following date and time and at the following location:

Date:	**January 26, 2017**
Time:	8:30 a.m. or as announced in the Regional Water Board's agenda
Location:	Regional Water Quality Control Board 5550 Skylane Blvd. Suite A Santa Rosa, California

Interested persons were invited to attend. At the public hearing, the Regional Water Board heard testimony pertinent to the discharge, WDRs, and permit. For accuracy of the record, important testimony was requested in writing.

Please be aware that dates and venues may change. Our Web address is http://www.waterboards.ca.gov/northcoast where you can access the current agenda for changes in dates and locations.

D. Waste Discharge Requirements Petitions

Any aggrieved person may petition the State Water Board to review the decision of the Regional Water Board regarding the final WDRs. The petition must be received by the State Water Board at the following address within 30 calendar days of the Regional Water Board's action:

State Water Resources Control Board
Office of Chief Counsel
P.O. Box 100, 1001 I Street
Sacramento, CA 95812-0100

For instruction on how to file a petition for review see http://www.waterboards.ca.gov/public_notices/petitions/water_quality/wqpetition_instr.shtml

E. Information and Copying

The Report of Waste Discharge (ROWD), related documents, tentative effluent limitations and special provisions, comments received, and other information are on file and may be inspected at the address identified in section VIII.C, above at any time between 8:30 a.m. and 4:45 p.m., Monday through Friday. Copying of documents may be arranged through the Regional Water Board by calling (707) 576-2220.

F. Register of Interested Persons

Any person interested in being placed on the mailing list for information regarding the WDRs and NPDES permit should contact the Regional Water Board, reference this Facility, and provide a name, address, and phone number.

G. Additional Information

Requests for additional information or questions regarding this order should be directed to Cathleen Goodwin at Cathleen.Goodwin@waterboards.ca.gov or (707) 576-2687.

DRAFT

Attachment F-1 – City of Crescent City, Wastewater Treatment Facility RPA Summary

Pollutant	Qualifier	Value	Unit	No. ND	MEC	Co	B	Endpoint
Arsenic	ND	2	µg/L	3	1.08	8	3	3
Arsenic	ND	8	µg/L					
Arsenic	ND	10	µg/L					
Arsenic		1.08	µg/L					
Cadmium	ND	0.25	µg/L	3	0.133	1	--	3
Cadmium	ND	5	µg/L					
Cadmium	ND	5	µg/L					
Cadmium		0.133	µg/L					
Chromium (III)		4	µg/L	0	4	190000	--	3
Chromium (VI)		0.03	µg/L	1	0.03	2	--	3
Chromium (VI)	ND	0.5	µg/L					
Copper[1]		45	µg/L	0	45	3	2	1
Lead	ND	0.5	µg/L	3	0.585	2	--	3
Lead	ND	5	µg/L					
Lead	ND	5	µg/L					
Lead		0.585	µg/L					
Mercury	ND	1	µg/L	4	<0.0321	0.04	0.0005	3
Mercury	ND	1	µg/L					
Mercury	ND	1	µg/L					
Mercury	ND	0.0321	µg/L					
Nickel		13	µg/L	--	16	5	--	1
Nickel		16	µg/L					
Nickel		5.2	µg/L					
Nickel		5.59	µg/L					

DRAFT

Pollutant	Qualifier	Value	Unit	No. ND	MEC	Co	B	Endpoint
Selenium	ND	2	µg/L	3	0.406	15	--	3
Selenium	ND	15	µg/L					
Selenium	ND	20	µg/L					
Selenium		0.406	µg/L					
Silver	ND	0.25	µg/L	3	0.122	0.7	0.16	3
Silver	ND	7	µg/L					
Silver	ND	10	µg/L					
Silver		0.122	µg/L					
Zinc[2]		203	µg/L	--	203	20	8	2
Cyanide	ND	3	µg/L	4	<1.2	1	--	3
Cyanide	ND	3	µg/L					
Cyanide	ND	3	µg/L					
Cyanide	ND	1.2	µg/L					
Total Chlorine Residual[3]		5.05	mg/L	1,429	5.05	2	0	2
Ammonia Nitrogen, Total (as N)[4]		25.5	mg/L	17	25.5	600	0	2
Chronic Toxicity[5]	--	62.5	TUc	0	62.5	1	0	1
Phenolic Compounds (non-chlorinated)	ND	0.1	µg/L	4	<0.1	30	0	3
Phenolic Compounds (non-chlorinated)	ND	1	µg/L					
Phenolic Compounds (non-chlorinated)	ND	1	µg/L					
Phenolic Compounds (non-chlorinated)	ND	0.5	µg/L					
Chlorinated phenolics	ND	1	µg/L	4	<1	1	0	3
Chlorinated phenolics	ND	1	µg/L					

DRAFT

Pollutant	Qualifier	Value	Unit	No. ND	MEC	Co	B	Endpoint
Chlorinated phenolics	ND	1	µg/L					
Chlorinated phenolics	ND	1	µg/L					
Endosulfan, Sum	ND	0.1	µg/L	4	<0.1	0.009	0	3
Endosulfan I	ND	0.1	µg/L					
Endosulfan I	ND	0.1	µg/L					
Endosulfan I	ND	0.1	µg/L					
Endosulfan I	ND	0.0017	µg/L					
Endosulfan II	ND	0.1	µg/L					
Endosulfan II	ND	0.1	µg/L					
Endosulfan II	ND	0.1	µg/L					
Endosulfan II	ND	0.00092	µg/L					
Endosulfan sulfate	ND	0.1	µg/L					
Endosulfan sulfate	ND	0.1	µg/L					
Endosulfan sulfate	ND	0.1	µg/L					
Endosulfan sulfate	ND	0.023	µg/L					
Endrin	ND	0.1	µg/L	5	<0.0019	0.002	0	3
Endrin	ND	1	µg/L					
Endrin	ND	0.1	µg/L					
Endrin	ND	0.1	µg/L					
Endrin	ND	0.0019	µg/L					
HCH, sum	ND	0.1	µg/L	4	<0.0014	0.004	0	3
alpha-BHC	ND	0.1	µg/L					
alpha-BHC	ND	0.1	µg/L					
alpha-BHC	ND	0.1	µg/L					
alpha-BHC	ND	0.0016	µg/L					
beta-BHC	ND	0.1	µg/L					
beta-BHC	ND	0.1	µg/L					
beta-BHC	ND	0.1	µg/L					
beta-BHC	ND	0.0018	µg/L					
delta-BHC	ND	0.1	µg/L					
delta-BHC	ND	0.1	µg/L					

DRAFT

Pollutant	Qualifier	Value	Unit	No. ND	MEC	Co	B	Endpoint
delta-BHC	ND	0.1	µg/L					
delta-BHC	ND	0.0014	µg/L					
gamma-BHC (Lindane)	ND	0.1	µg/L					
gamma-BHC (Lindane)	ND	0.1	µg/L					
gamma-BHC (Lindane)	ND	0.1	µg/L					
gamma-BHC (Lindane)	ND	0.0014	µg/L					
Acrolein	ND	2	µg/L	3	<2	220	0	3
Acrolein	ND	2	µg/L					
Acrolein	ND	2	µg/L					
Antimony	ND	0.5	µg/L	3	0.337	1,200	0	3
Antimony	ND	10	µg/L					
Antimony	ND	10	µg/L					
Antimony		0.337	µg/L					
Bis(2-chloroethoxy)methane	ND	5	µg/L	4	<0.55	4.4	0	3
Bis(2-chloroethoxy)methane	ND	5	µg/L					
Bis(2-chloroethoxy)methane	ND	5	µg/L					
Bis(2-chloroethoxy)methane	ND	0.55	µg/L					
Bis(2-chloroisopropyl)ether	ND	2	µg/L	3	<0.5	1,200	0	3
Bis(2-chloroisopropyl)ether	ND	2	µg/L					
Bis(2-chloroisopropyl)ether	ND	2	µg/L					
Bis(2-chloroisopropyl)ether	ND	0.5	µg/L					
Chlorobenzene	ND	0.5	µg/L	4	<0.5	570	0	3
Chlorobenzene	ND	1	µg/L					
Chlorobenzene	ND	0.5	µg/L					
Chlorobenzene	ND	0.5	µg/L					
Di-n-butyl phthalate	ND	5	µg/L	4	<0.73	3,500	0	3
Di-n-butyl phthalate	ND	5	µg/L					
Di-n-butyl phthalate	ND	5	µg/L					

DRAFT

Pollutant	Qualifier	Value	Unit	No. ND	MEC	Co	B	Endpoint
Di-n-butyl phthalate	ND	0.73	µg/L					
Dichlorobenzenes, sum	ND	0.5	µg/L	4	<0.5	5,100	0	3
1,2-Dichlorobenzene	ND	0.5	µg/L					
1,2-Dichlorobenzene	ND	1	µg/L					
1,2-Dichlorobenzene	ND	0.5	µg/L					
1,2-Dichlorobenzene	ND	0.5	µg/L					
1,3-Dichlorobenzene	ND	0.5	µg/L					
1,3-Dichlorobenzene	ND	1	µg/L					
1,3-Dichlorobenzene	ND	0.5	µg/L					
1,3-Dichlorobenzene	ND	0.5	µg/L					
Diethyl Phthalate	ND	2	µg/L	4	<0.54	33,000	0	3
Diethyl Phthalate	ND	2	µg/L					
Diethyl Phthalate	ND	2	µg/L					
Diethyl Phthalate	ND	0.54	µg/L					
Dimethyl Phthalate	ND	2	µg/L	3	<1.1	820,000	0	3
Dimethyl Phthalate	ND	2	µg/L					
Dimethyl Phthalate	ND	1.1						
4,6-Dinitro-2-methylphenol	ND	5	µg/L	3	<5	220	0	3
4,6-Dinitro-2-methylphenol	ND	5	µg/L					
4,6-Dinitro-2-methylphenol	ND	0.74	µg/L					
2,4-Dinitrophenol	ND	5	µg/L	4	<5	4	0	3
2,4-Dinitrophenol	ND	5	µg/L					
2,4-Dinitrophenol	ND	5	µg/L					
2,4-Dinitrophenol	ND	0.51	µg/L					
Ethylbenzene	ND	0.5	µg/L	4	<0.5	4,100	0	3
Ethylbenzene	ND	1	µg/L					
Ethylbenzene	ND	0.5	µg/L					
Ethylbenzene	ND	0.5	µg/L					

DRAFT

Pollutant	Qualifier	Value	Unit	No. ND	MEC	Co	B	Endpoint
Fluoranthene	ND	0.05	µg/L	3	<0.05	15	0	3
Fluoranthene	ND	0.05	µg/L					
Fluoranthene	ND	0.1	µg/L					
Hexachlorocyclopentadiene	ND	1	µg/L	4	<1	58	0	3
Hexachlorocyclopentadiene	ND	1	µg/L					
Hexachlorocyclopentadiene	ND	1	µg/L					
Hexachlorocyclopentadiene	ND	0.5	µg/L					
Nitrobenzene	ND	10	µg/L	5	<0.52	4.9	0	3
Nitrobenzene	ND	1	µg/L					
Nitrobenzene	ND	1	µg/L					
Nitrobenzene	ND	1	µg/L					
Nitrobenzene	ND	0.52	µg/L					
Thallium	ND	1	µg/L	4	<0.1	2	0	3
Thallium	ND	10	µg/L					
Thallium	ND	10	µg/L					
Thallium	ND	0.1	µg/L					
Toluene	ND	0.5	µg/L	1	2.6	85,000	0	2
Toluene		1.8	µg/L					
Toluene		1	µg/L					
Toluene		2.6	µg/L					
Tributyltin	ND	0.003	µg/L	4	<0.0013	0.0014	0	3
Tributyltin	ND	0.0029	µg/L					
Tributyltin	ND	0.0013	µg/L					
Tributyltin	ND	0.05	µg/L					
1,1,1-Trichloroethane	ND	0.5	µg/L	4	<0.5	540,000	0	3
1,1,1-Trichloroethane	ND	1	µg/L					
1,1,1-Trichloroethane	ND	0.5	µg/L					

DRAFT

Pollutant	Qualifier	Value	Unit	No. ND	MEC	Co	B	Endpoint
1,1,1-Trichloroethane	ND	0.5	µg/L					
Acrylonitrile	ND	5	µg/L	3	<2	0.1	0	3
Acrylonitrile	ND	2	µg/L					
Acrylonitrile	ND	2	µg/L					
Aldrin	ND	0.1	µg/L	4	<0.0016	0.000022	0	3
Aldrin	ND	0.1	µg/L					
Aldrin	ND	0.1	µg/L					
Aldrin	ND	0.0016	µg/L					
Benzene	ND	0.5	µg/L	4	<0.5	5.9	0	3
Benzene	ND	1	µg/L					
Benzene	ND	0.5	µg/L					
Benzene	ND	0.5	µg/L					
Benzidine	ND	5	µg/L	4	<0.5	0.000069	0	3
Benzidine	ND	5	µg/L					
Benzidine	ND	5	µg/L					
Benzidine	ND	0.5	µg/L					
Beryllium	ND	0.5	µg/L	4	<0.29	0.033	0	3
Beryllium	ND	1	µg/L					
Beryllium	ND	1	µg/L					
Beryllium	ND	0.29	µg/L					
Bis(2-chloroethyl)ether	ND	1	µg/L	4	<0.5	0.045	0	3
Bis(2-chloroethyl)ether	ND	1	µg/L					
Bis(2-chloroethyl)ether	ND	1	µg/L					
Bis(2-chloroethyl)ether	ND	0.5	µg/L					
Bis(2-ethylhexyl) phthalate		17	µg/L	3	17	3.5	0	3
Bis(2-ethylhexyl) phthalate	ND	3	µg/L					
Bis(2-ethylhexyl) phthalate	ND	3	µg/L					

DRAFT

Pollutant	Qualifier	Value	Unit	No. ND	MEC	Co	B	Endpoint
Bis(2-ethylhexyl) phthalate	ND	2	µg/L					
Bis(2-ethylhexyl) phthalate		1.4	µg/L					
Carbon Tetrachloride	ND	0.5	µg/L	4	<0.5	0.9	0	3
Carbon Tetrachloride	ND	1	µg/L					
Carbon Tetrachloride	ND	0.5	µg/L					
Carbon Tetrachloride	ND	0.5	µg/L					
Chlordane	ND	1	µg/L	4	<0.034	0.000023	0	3
Chlordane	ND	1	µg/L					
Chlordane	ND	1	µg/L					
Chlordane	ND	0.034	µg/L					
Chloroform		1.2	µg/L	0	4.2	130	0	3
Chloroform		4.1	µg/L					
Chloroform		3.5	µg/L					
Chloroform		4.2	µg/L					
DDT, Sum	ND	0.1	µg/L	4	<0.001	0.00017	0	3
p,p-DDD	ND	0.1	µg/L					
p,p-DDD	ND	0.1	µg/L					
p,p-DDD	ND	0.1	µg/L					
p,p-DDD	ND	0.0099	µg/L					
p,p-DDE	ND	0.1	µg/L					
p,p-DDE	ND	0.1	µg/L					
p,p-DDE	ND	0.1	µg/L					
p,p-DDE	ND	0.002	µg/L					
p,p-DDT	ND	0.1	µg/L					
p,p-DDT	ND	0.1	µg/L					
p,p-DDT	ND	0.1	µg/L					
p,p-DDT	ND	0.001	µg/L					
Dibromochloromethane	ND	0.5	µg/L	4	0.59	8.6		3
Dibromochloromethane	ND	1	µg/L					

DRAFT

Pollutant	Qualifier	Value	Unit	No. ND	MEC	Co	B	Endpoint
Dibromochloromethane		0.59	µg/L					
Dibromochloromethane	ND	0.5	µg/L					
Dibromochloromethane	ND	0.5	µg/L					
1,4-Dichlorobenzene	ND	0.5	µg/L	4	<0.5	18	0	3
1,4-Dichlorobenzene	ND	1	µg/L					
1,4-Dichlorobenzene	ND	0.5	µg/L					
1,4-Dichlorobenzene	ND	0.5	µg/L					
3,3'-Dichlorobenzidine	ND	5	µg/L	4	<0.5	0.0081	0	3
3,3'-Dichlorobenzidine	ND	5	µg/L					
3,3'-Dichlorobenzidine	ND	5	µg/L					
3,3'-Dichlorobenzidine	ND	0.5	µg/L					
1,2-Dichloroethane	ND	0.5	µg/L	4	<0.5	28	0	3
1,2-Dichloroethane	ND	1	µg/L					
1,2-Dichloroethane	ND	0.5	µg/L					
1,2-Dichloroethane	ND	0.5	µg/L					
1,1-Dichloroethylene	ND	0.5	µg/L	4	<0.5	0.9	0	3
1,1-Dichloroethylene	ND	1	µg/L					
1,1-Dichloroethylene	ND	0.5	µg/L					
1,1-Dichloroethylene	ND	0.5	µg/L					
Dichlorobromomethane	ND	1	µg/L	2	0.59	6.2	0	3
Dichlorobromomethane		0.59	µg/L					
Dichlorobromomethane	ND	0.5	µg/L					
Dichloromethane	ND	0.5	µg/L	5	<0.5	450	0	3
Dichloromethane	ND	1	µg/L					
Dichloromethane	ND	2	µg/L					
Dichloromethane	ND	0.5	µg/L					
Dichloromethane	ND	0.5	µg/L					

DRAFT

Pollutant	Qualifier	Value	Unit	No. ND	MEC	Co	B	Endpoint
Dieldrin	ND	0.1	µg/L	3	<0.1	0.00004	0	1
Dieldrin		0.1	µg/L					
Dieldrin	ND	0.1	µg/L					
Dieldrin	ND	0.0018	µg/L					
2,4-Dinitrotoluene	ND	5	µg/L	4	<0.59	2.6	0	3
2,4-Dinitrotoluene	ND	5	µg/L					
2,4-Dinitrotoluene	ND	5	µg/L					
2,4-Dinitrotoluene	ND	0.59	µg/L					
1,2-Diphenylhydrazine	ND	1	µg/L	4	<0.5	0.16	0	3
1,2-Diphenylhydrazine	ND	1	µg/L					
1,2-Diphenylhydrazine	ND	1						
1,2-Diphenylhydrazine	ND	0.5						
Halomethanes, sum	ND	0.5	µg/L	4	<0.5	130	0	3
Bromoform	ND	0.5	µg/L					
Bromoform	ND	1	µg/L					
Bromoform	ND	0.5	µg/L					
Bromoform	ND	0.5	µg/L					
Bromomethane	ND	0.5	µg/L					
Bromomethane	ND	1	µg/L					
Bromomethane	ND	0.5	µg/L					
Bromomethane	ND	0.5	µg/L					
Chloromethane	ND	0.5	µg/L					
Chloromethane	ND	1	µg/L					
Chloromethane	ND	0.5	µg/L					
Chloromethane	ND	0.5	µg/L					

DRAFT

Pollutant	Qualifier	Value	Unit	No. ND	MEC	Co	B	Endpoint
Heptachlor	ND	0.1	µg/L	5	<0.0018	0.00005	0	3
Heptachlor	ND	1	µg/L					
Heptachlor	ND	0.1	µg/L					
Heptachlor	ND	0.1	µg/L					
Heptachlor	ND	0.0018	µg/L					
Heptachlor epoxide	ND	0.1	µg/L	5	<0.0015	0.00002	0	3
Heptachlor epoxide	ND	1	µg/L					
Heptachlor epoxide	ND	0.1	µg/L					
Heptachlor epoxide	ND	0.1	µg/L					
Heptachlor epoxide	ND	0.0015	µg/L					
Hexachlorobenzene	ND	1	µg/L	4	<0.5	0.00021	0	3
Hexachlorobenzene	ND	1	µg/L					
Hexachlorobenzene	ND	1	µg/L					
Hexachlorobenzene	ND	0.5	µg/L					
Hexachlorobutadiene	ND	0.5	µg/L	4	<0.5	14	0	3
Hexachlorobutadiene	ND	1	µg/L					
Hexachlorobutadiene	ND	1	µg/L					
Hexachlorobutadiene	ND	1	µg/L					
Hexachloroethane	ND	2	µg/L	5	<0.5	2.5	0	3
Hexachloroethane	ND	1	µg/L					
Hexachloroethane	ND	1	µg/L					
Hexachloroethane	ND	1	µg/L					
Hexachloroethane	ND	0.5	µg/L					
Isophorone	ND	1	µg/L	4	<0.55	730	0	3
Isophorone	ND	1	µg/L					
Isophorone	ND	1	µg/L					
Isophorone	ND	0.55	µg/L					

DRAFT

Pollutant	Qualifier	Value	Unit	No. ND	MEC	Co	B	Endpoint
N-Nitrosodimethylamine	ND	5	µg/L	4	<0.5	7.3	0	3
N-Nitrosodimethylamine	ND	5	µg/L					
N-Nitrosodimethylamine	ND	5	µg/L					
N-Nitrosodimethylamine	ND	0.5	µg/L					
N-Nitrosodi-N-Propylamine	ND	5	µg/L	4	<0.5	0.38	0	3
N-Nitrosodi-N-Propylamine	ND	5	µg/L					
N-Nitrosodi-N-Propylamine	ND	5	µg/L					
N-Nitrosodi-N-Propylamine	ND	0.5	µg/L					
N-Nitrosodiphenylamine	ND	1	µg/L	4	<0.71	2.5	0	3
N-Nitrosodiphenylamine	ND	1	µg/L					
N-Nitrosodiphenylamine	ND	1	µg/L					
N-Nitrosodiphenylamine	ND	0.71	µg/L					
PAHs, sum	ND	0.05	µg/L	3	<0.01	0.0088	0	3
Acenaphthylene	ND	0.2	µg/L					
Acenaphthylene	ND	0.2	µg/L					
Acenaphthylene	ND	0.2	µg/L					
Anthracene	ND	0.3	µg/L					
Anthracene	ND	0.3	µg/L					
Anthracene	ND	0.3	µg/L					
Benzo(a)pyrene	ND	0.3	µg/L					
Benzo(a)pyrene	ND	0.3	µg/L					
Benzo(a)pyrene	ND	0.3	µg/L					
Benzo(k)fluoranthene	ND	0.3	µg/L					
Benzo(k)fluoranthene	ND	0.3	µg/L					
Benzo(k)fluoranthene	ND	0.3	µg/L					
Chrysene	ND	0.3	µg/L					
Chrysene	ND	0.3	µg/L					
Chrysene	ND	0.3	µg/L					
Dibenzo(a,h)anthracene	ND	0.1	µg/L					
Dibenzo(a,h)anthracene	ND	0.1	µg/L					

DRAFT

Pollutant	Qualifier	Value	Unit	No. ND	MEC	Co	B	Endpoint
Dibenzo(a,h)anthracene	ND	0.1	µg/L					
Fluorene	ND	0.1	µg/L					
Fluorene	ND	0.1	µg/L					
Fluorene	ND	0.1	µg/L					
Indeno(1,2,3-cd)pyrene	ND	0.05	µg/L					
Indeno(1,2,3-cd)pyrene	ND	0.1	µg/L					
Indeno(1,2,3-cd)pyrene	ND	0.1	µg/L					
Phenanthrene	ND	0.05	µg/L					
Phenanthrene	ND	0.1	µg/L					
Phenanthrene	ND	0.1	µg/L					
Pyrene	ND	0.05	µg/L					
Pyrene	ND	0.1	µg/L					
Pyrene	ND	0.1	µg/L					
PCBs, sum	ND	1	µg/L	4	<0.5	0.000019	0	3
PCB-1016	ND	1	µg/L					
PCB-1016	ND	1	µg/L					
PCB-1016	ND	0.5	µg/L					
PCB-1016	ND	0.5	µg/L					
PCB-1221	ND	1	µg/L					
PCB-1221	ND	1	µg/L					
PCB-1221	ND	0.5	µg/L					
PCB-1221	ND	0.5	µg/L					
PCB-1232	ND	1	µg/L					
PCB-1232	ND	1	µg/L					
PCB-1232	ND	0.5	µg/L					
PCB-1232	ND	0.5	µg/L					
PCB-1242	ND	1	µg/L					
PCB-1242	ND	1	µg/L					
PCB-1242	ND	0.5	µg/L					
PCB-1242	ND	0.5	µg/L					
PCB-1248	ND	1	µg/L					
PCB-1248	ND	1	µg/L					
PCB-1248	ND	0.5	µg/L					

DRAFT

Pollutant	Qualifier	Value	Unit	No. ND	MEC	Co	B	Endpoint
PCB-1248	ND	0.5	µg/L					
PCB-1254	ND	1	µg/L					
PCB-1254	ND	1	µg/L					
PCB-1254	ND	0.5	µg/L					
PCB-1254	ND	0.5	µg/L					
PCB-1260	ND	1	µg/L					
PCB-1260	ND	1	µg/L					
PCB-1260	ND	0.5	µg/L					
PCB-1260	ND	0.5	µg/L					
TCDD Equivalents	ND	1.90×10^{-6}	µg/L	1	2.62×10^{-8}	3.9×10^{-9}	0	1
TCDD Equivalents		2.62×10^{-8}	µg/L					
TCDD Equivalents		1.47×10^{-7}	µg/L					
TCDD Equivalents		2.35×10^{-8}	µg/L					
1,1,2,2-Tetrachloroethane	ND	0.5	µg/L	4	<0.5	2.3	0	3
1,1,2,2-Tetrachloroethane	ND	1	µg/L					
1,1,2,2-Tetrachloroethane	ND	0.5	µg/L					
1,1,2,2-Tetrachloroethane	ND	0.5	µg/L					
Tetrachloroethylene	ND	0.95	µg/L	5	<0.5	2.0	0	3
Tetrachloroethylene	ND	0.5	µg/L					
Tetrachloroethylene	ND	1	µg/L					
Tetrachloroethylene	ND	0.5	µg/L					
Tetrachloroethylene	ND	0.5	µg/L					
Toxaphene	ND	1	µg/L	4	<0.052	0.00021	0	3
Toxaphene	ND	1	µg/L					
Toxaphene	ND	1	µg/L					
Toxaphene	ND	0.052	µg/L					
Trichloroethylene			µg/L	2		27	0	3
Trichloroethylene			µg/L					

DRAFT

Pollutant	Qualifier	Value	Unit	No. ND	MEC	Co	B	Endpoint
1,1,2-Trichloroethane	ND	0.5	µg/L	4	<0.5	9.4	0	3
1,1,2-Trichloroethane	ND	1	µg/L					
1,1,2-Trichloroethane	ND	0.5	µg/L					
1,1,2-Trichloroethane	ND	0.5	µg/L					
2,4,6-Trichlorophenol	ND	5	µg/L	4	<0.71	0.29	0	3
2,4,6-Trichlorophenol	ND	5	µg/L					
2,4,6-Trichlorophenol	ND	5	µg/L					
2,4,6-Trichlorophenol	ND	0.71	µg/L					
Vinyl Chloride	ND	0.5	µg/L	4	<0.5	36	0	3
Vinyl Chloride	ND	1	µg/L					
Vinyl Chloride	ND	0.5	µg/L					
Vinyl Chloride	ND	0.5	µg/L					

1 Copper was detected in all 54 samples collected between July 2011 and October 2015, with results ranging from 6.5 µg/L to 45 µg/L.
2 Zinc was detected in all 56 samples collected between July 2011 and October 2015, with results ranging from 18 µg/L to 203 µg/L.
3 Total residual chlorine was detected in two out of 1,431 samples collected between July 2011 and October 2015, with results ranging from <0.05 µg/L to 5.05 µg/L.
4 Ammonia was detected in 192 out of 209 samples collected between July 2011 and October 2015, with results ranging from <0.03 mg/L to 25.5 mg/L.
5 Chronic toxicity ranged from 7.6 TUc to 62.5 TUc in 32 chronic toxicity tests conducted between July 2011 and October 2015. See section IV.C.5 of the Fact Sheet (Attachment F) for a full summary of the chronic toxicity testing results and a discussion of the reasonable potential determination.

DRAFT