ORDER No. R1-2015-0002
WDID No. 1A84002OSIS

WASTE DISCHARGE REQUIREMENTS FOR THE CITY OF TULELAKE WASTEWATER TREATMENT FACILITY

SISKIYOU COUNTY

The following Permittee is subject to waste discharge requirements as set forth in this Order:

Table 1. Permittee Information

Permittee	The City of Tulelake
Name of Facility	The City of Tulelake Wastewater Treatment Facility
Facility Address	1000 Dean Callas Way
	Tulelake, CA 96134

The discharge by the City of Tulelake from the discharge point identified below is subject to waste discharge requirements as set forth in this Order:

Table 2. Effluent Discharge Points

Effluent Discharge Point	Effluent Description	Effluent Discharge Point Latitude	Effluent Discharge Point Longitude	Receiving Water
001	Treated Municipal Wastewater – Recycled Water Storage Pond	N 41°56'45.98"	W 121°28'27.49"	Groundwater
002	Treated Municipal Wastewater – Crop Irrigation	N 41°56'45.98"	W 121°28'27.49"	Groundwater

IT IS HEREBY ORDERED that, in order to meet the provisions contained in division 7 of the Water Code (commencing with section 13000) and regulations adopted thereunder, the Permittee shall comply with the requirements in this Order.

I, Matthias St. John, Executive Officer, do hereby certify that this Order with all attachments is a full, true, and correct copy of an Order adopted by the California Regional Water Quality Control Board, North Coast Region, on March 7, 2015.

_____
Matthias St. John, Executive Officer

JOHN W. CORBETT, CHAIR | MATTHIAS ST. JOHN, EXECUTIVE OFFICER
5550 Skylane Blvd., Suite A, Santa Rosa, CA 95403 | www.waterboards.ca.gov/northcoast
RECYCLED PAPER

Table of Contents

I. Facility Information 3
II. Findings 3
III. Discharge Prohibitions 4
IV. Effluent Limitations 5
  A. Final Effluent Limitations – Discharge Point 001 5
  B. Interim Effluent Limitations – Discharge Point 001 6
V. Discharge Specifications 6
VI. Recycled Water Specifications 6
VII. Solids Discharge Specifications 6
  Sludge Storage, Disposal, and Handling Requirements 6
VIII. Receiving Water Limitations 7
  A. Groundwater Limitations 7
IX. General Provisions 8
X. Compliance Determination 12
  A. Average Daily Dry Weather Flow (ADWF) 12
  B. Average Monthly Effluent Limitation (AMEL) 12
  C. Average Annual Effluent Limitation (AAEL) 12
  D. Instantaneous Minimum Effluent Limitations 12
  E. Instantaneous Maximum Effluent Limitations 13
  F. Bacteriological Limitations 13

List of Tables

Table 1. Permittee Information 1
Table 2. Effluent Discharge Points 1
Table 3. Facility Information 3
Table 4. Secondary Treatment Final Effluent Limitations – Discharge Point 001 5
Table 5. Constituent Specific Final Effluent Limitations – Discharge Point 001 5
Table 6. Interim Effluent Limitations – Discharge Point 001 6

List of Attachments

Attachment A – Maps and Diagrams A-1
Attachment B – Monitoring and Reporting Program B-1
Attachment C – Fact Sheet C-1

DRAFT

I. FACILITY INFORMATION

The following Permittee is subject to waste discharge requirements as set forth in this Order:

Table 3. Facility Information

Permittee	The City of Tulelake
Name of Facility	The City of Tulelake Wastewater Treatment Facility
Facility Address	1000 Dean Callas Way
	Tulelake, CA 96134
	Siskiyou County
Facility Contact, Title, and Phone	Brett Nystrom, Director of Public Works, (530) 667-2685
Mailing Address	P.O. Box 847, Tulelake, CA 96134
Type of Facility	Publicly Owned Treatment Works (POTW)
Facility Design Flow	0.18 million gallons per day (mgd) Average Dry Weather Flow (ADWF)

II. FINDINGS

The California Regional Water Quality Control Board, North Coast Region (hereinafter Regional Water Board), finds:

A. Basis and Rationale for Requirements. The Regional Water Board developed the requirements in this Order based on information submitted as part of the Permittee's permit application and other available information. The Fact Sheet (Attachment C) contains facility information, legal authorities, and rationale for Order requirements. The Fact Sheet is hereby incorporated into this Order and constitutes part of the Findings for this Order. Attachments A and B are also incorporated into this Order.

B. Background and Facility Description. The City of Tulelake (hereinafter Permittee) is currently discharging pursuant to Waste Discharge Requirements Order No. R1-2013-0029. The Permittee submitted a Report of Waste Discharge (ROWD) on July 2, 2014, and applied for issuance of waste discharge requirements to recycle up to 0.18 mgd of treated wastewater via crop irrigation from the City of Tulelake Wastewater Treatment Facility (WWTF), hereinafter Facility.

The Permittee will need to rehabilitate its existing WWTF and construct a new recycled water storage and reuse system in order to meet the terms of this Order. In particular, the Permittee plans to dredge accumulated sludge from its two treatment lagoons and convert its existing sand filters into a combined third treatment lagoon. Additionally, the Permittee plans to construct two recycled water storage ponds and develop adjacent fields for crop irrigation.

Upon completion of wastewater treatment plant upgrades and the development and operation of a recycled water storage and reuse system, the Permittee plans to terminate its current surface water discharge and associated NPDES permit. This Order will control the treatment storage and reuse of the wastewater.

DRAFT

Discharges of waste that violate any narrative or numerical water quality objective are not authorized by this Order. Additional background information, including a description of the existing and proposed Facility, is included in the Fact Sheet.

C. California Environmental Quality Act (CEQA). On April 6, 2009, the Permittee adopted a mitigated negative declaration (SCH No. 2008102070) for the project in order to comply with CEQA. The Regional Water Board has reviewed and considered the environmental document and any proposed changes incorporated into the project or required as a condition of approval to avoid significant effects to the environment. This Order contains mitigation measures necessary to reduce or eliminate significant impacts on the environment (within Regional Water Board jurisdiction) as conditions of approval, including Discharge Prohibitions; Recycled water and Discharge Specifications; the development of a Recycled Water Operation and Maintenance/ Irrigation Management Plan; and regular groundwater monitoring and reporting requirements. The Regional Water Board will file a Notice of Determination within five days from the issuance of this Order.

D. Notification of Interested Parties. The Regional Water Board has notified the Permittee and interested agencies and persons of its intent to prescribe Waste Discharge Requirements for the discharge and has provided them with an opportunity to submit their written comments and recommendations.

E. Consideration of Public Comment. The Regional Water Board, in a public meeting, heard and considered all comments pertaining to the discharge.

III. DISCHARGE PROHIBITIONS

A. The average daily dry weather flow (ADWF) of waste through the treatment plant shall not exceed 0.18 mgd over three consecutive dry weather months each year. Compliance with this prohibition shall be measured at Monitoring Location INF-001 as described in the Monitoring and Reporting Program (MRP).

B. The discharge of wastewater from industrial facilities into the collection system or the WWTF is prohibited unless a notification meeting the requirements of Section VIII. GENERAL PROVISION F, has been submitted to and has concurrence from the Executive Officer.

C. Creation of pollution, contamination, or nuisance as defined by section 13050(m) of the Water Code is prohibited.

D. Any sanitary sewer overflow (SSO) that results in a discharge of untreated or partially treated wastewater to waters of the State or land that creates pollution, contamination, or nuisance as defined in Water Code section 13050 (m) is prohibited.

E. The discharge of untreated or partially treated waste (receiving a lower level of treatment than described in Attachment C, I.C. Planned Upgrades) from anywhere within the collection, treatment, or disposal system is prohibited.

DRAFT

F. The discharge of waste to land that is not owned by or under agreement to use by the Permittee is prohibited, except for use for fire suppression as provided in title 22, sections 60307 (a) and (b) of the California Code of Regulations.

G. The discharge of waste at any point not described in Table 2 or Finding II.B or authorized by a permit issued by the State Water Board or another Regional Water Board is prohibited.

H. The discharge of waste to the Lost River and its tributaries, including the Tulelake Irrigation District canals or drains is prohibited.

IV. EFFLUENT LIMITATIONS

A. Final Effluent Limitations – Discharge Point 001

The Permittee shall maintain compliance with the following effluent limitations at Discharge Point 001, with compliance measured at Monitoring Location EFF-001 as described in the MRP.

1. The instantaneous minimum and maximum pH effluent limitations are 7.0 and 8.5, respectively.

Table 4. Secondary Treatment Final Effluent Limitations – Discharge Point 001

Parameter	Units	Effluent Limitations	
		Average Monthly	Maximum Daily
Biochemical Oxygen Demand (5-day @ 20°C)	mg/L	50	80

Table 5. Constituent Specific Final Effluent Limitations – Discharge Point 001

Parameter	Units	Average Annual Effluent Limitation
Bis(2-Ethylhexyl)Phthalate	µg/L	4
Cyanide	µg/L	68.4
Bromodichloromethane	µg/L	26.4
Dibromochlormethane	µg/L	0.3
Chloroform	µg/L	39.1
Toluene	µg/L	54.4
Aluminum, dissolved	µg/L	200
Antimony, dissolved	µg/L	0.7
Arsenic, dissolved	µg/L	8.8
Cadmium	µg/L	1.7
Chromium VI, dissolved	µg/L	5.2
Copper, dissolved	µg/L	23.6
Lead, dissolved	µg/L	2.51
Nickel, dissolved	µg/L	32.6

DRAFT

2. The Permittee shall comply with any applicable Salt and Nutrient Management Plan that is adopted by the Regional Water Board.

B. Interim Effluent Limitations – Discharge Point 001

Beginnning on the effective date of this Order and ending no later than April 1, 2022, the Permittee shall comply with the following interim effluent limitations at Discharge Point 001 with compliance measured at Monitoring Location EFF-001 as described in the MRP. These interim effluent limitations shall apply in lieu of the corresponding final effluent limitation specified for the same parameter during the time period indicated in this Order.

Table 6. Interim Effluent Limitations – Discharge Point 001

Parameter	Units	Average Annual Effluent Limitation
Aluminum, dissolved	µg/L	466

V. DISCHARGE SPECIFICATIONS

A. Objectionable Odor. Objectionable odor originating at the Facility shall not be perceivable beyond the limits of the wastewater treatment, storage, and crop irrigation areas.

B. Public Contact. Public contact with wastewater shall be precluded or controlled through such means as fences and signs, or other acceptable alternatives.

C. Pond Freeboard. Pond freeboard in the wastewater treatment or storage ponds shall never be less than two feet as measured vertically from the water surface to the lowest point of overflow.

D. Vector Control. The Facility and crop irrigation areas shall be managed to prevent the breeding of mosquitoes.

VI. RECYCLED WATER SPECIFICATIONS

A. Lease Agreement. The Permittee shall be responsible to ensure that the lessee of the recycled water application area complies with the lease agreement required by section IX.Q.1 of this Order.

VII. SOLIDS DISCHARGE SPECIFICATIONS

Sludge Storage, Disposal, and Handling Requirements

1. Sludge means the solid, semisolid, and liquid residues removed during primary, secondary, or other wastewater treatment processes. Solid waste refers to grit and screenings generated during preliminary treatment. Residual sludge means sludge that will not be subject to further treatment at the wastewater system. Biosolids refers to sludge that has undergone sufficient treatment and testing to qualify for reuse pursuant to the U.S. EPA Part 503 Biosolids Rule. (40 C.F.R. § 503).

2. Sludge and solid waste shall be removed from screens, sumps, tanks, and ponds as needed to ensure optimal plant operation.

DRAFT

3. Treatment, storage, and reuse or disposal of sludge, solid waste, or biosolids shall be conducted in a manner that minimzes leachate formation and precludes infiltration of waste constituents into soil in a mass or at concentrations that will violate the groundwater limitations of this Order.

4. Residual sludge, and solid waste shall be disposed of in a manner approved by the appropriate Regional Water Board's Executive Officer and consistent with the Consolidated Requirements for Treatment, Storage, Processing, or Disposal of Solid Waste. (Cal. Code Regs., tit. 27 div. 2.) Offsite treatment, storage, reuse, or disposal shall be operated in accordance with valid WDRs issued by the State Water Board or Regional Water Board.

5. Reuse and disposal of biosolids shall comply with the U.S. EPA Part 503 Biosolids Rule. (40 C.F.R. § 503).

VIII. RECEIVING WATER LIMITATIONS

A. Groundwater Limitations

1. The collection, treatment, storage, reuse and disposal of wastewater shall not cause groundwaters to contain levels of chemical constituents in excess of limits specified in California Code of Regulations, title 22[1], and the Basin Plan.

2. The collection, treatment, storage, reuse and disposal of wastewater shall not cause groundwaters used for agricultural supply (AGR) to contain concentrations of chemical constituents in amounts that adversely affect such beneficial use.

3. The collection, treatment, storage, reuse and disposal of wastewater shall not cause groundwaters to contain levels of radionuclides in groundwater in excess of the limits specified in title 22, Division 4, Chapter 15, Article 5, section 64443 of the California Code of Regulations.

4. The collection, treatment, storage, reuse and disposal of wastewater shall not cause groundwaters to contain taste- or odor-producing substances in concentrations that cause nuisance or adversely affect beneficial uses.

5. The collection, treatment, storage, reuse and disposal of wastewater shall not cause groundwaters to contain a median concentration of coliform organisms over any 7-day period to exceed 1.1 Most Probable Number (MPN) per 100 milliliters or 1 colony per 100 milliliters.

[1] Currently, title 22 limits are contained in the following tables: Table 64431-A of section 64431 (Inorganic Chemicals), Table 64431-B of section 64431 (Fluoride), Table 64444-A of section 64444 (Organic Chemicals), Table 64449-A of section 64449 (Secondary Maximum Contaminant Levels – Consumer Acceptance Limits), and Table 64449-B of section 64449 (Secondary Maximum Contaminant Levels – Ranges)

DRAFT

IX. GENERAL PROVISIONS

The Permittee shall comply with the following provisions:

A. Availability. A copy of this Order and the associated Monitoring and Reporting Program shall be maintained at the Facility and be available at all times to operating personnel.

B. Enforcement. The Permittee shall implement the project as described in this Order. Violation of any requirements contained in this Order may subject the Permittee to enforcement action, including civil liability, under the Water Code.

C. Collection System. The Permittee has coverage under, and is separately subject to, the requirements of State Water Board Order No. 2006-003-DWQ, Statewide General WDRs for Sanitary Sewer Systems. As such, the Permittee provides notification and reporting of sanitary sewer overflows in accordance with the requirements of Order No. 2006-003-DWQ and WQ 2013-0058-EXEC and any revisions thereto for the operation of its wastewater collection system.

D. Operation and Maintenance. The Permittee shall at all times properly operate and maintain all facilities and systems of treatment and control (and related appurtenances) that are installed or used by the Permittee to achieve compliance with this Order. Proper operation and maintenance includes adequate laboratory control and appropriate quality assurance procedures. This provision requires the operation of backup or auxiliary facilities or similar systems that are installed by the Permittee only when necessary to achieve compliance with the conditions of this Order.

The Permittee shall maintain an updated Operation and Maintenance Manual (O&M Manual) for the Facility. The Permittee shall update the O&M Manual, as necessary, to conform to changes in operation and maintenance of the Facility. The O&M Manual shall be readily available to operating personnel on site. The O&M Manual shall include the following:

1. A Facility table of organization showing the number of employees, duties and qualifications, and plant attendance schedules (daily, weekends and holidays, part-time, etc.). The description should include documentation that the personnel are knowledgeable and qualified to operate the treatment facility so as to achieve the required level of treatment at all times.
2. A detailed description of safe and effective operation and maintenance of treatment processes, process control instrumentation, and equipment.
3. A description of laboratory and quality assurance procedures.
4. All process and equipment inspection and maintenance schedules.
5. Description of safeguards to assure that, should there be reduction, loss, or failure of electric power, the Permittee will be able to comply with requirements of this Order.
6. A description of preventive (fail-safe) and contingency (response and cleanup) plans for controlling accidental discharges, and for minimizing the effect of such events.

DRAFT

These plans shall identify the possible sources (such as loading and storage areas, power outage, waste treatment unit failure, process equipment failure, tank and piping failure) of accidental discharges, untreated or partially treated waste bypass, and polluted drainage.

E. Change in Discharge. The Permittee shall promptly report to the Regional Water Board any material change in the character, location, or volume of the discharge. New ponds associated with the treatment and or storage of wastewater or treated effluent shall be constructed in a manner that protects groundwater. The Permittee shall submit design proposals for new wastewater storage ponds to the Regional Water Board Executive Officer for review prior to construction and demonstrate that the pond complies with the Water Code and title 27 of the California Code of Regulations. Pond design and operation plan must include features and best management practices (BMPs) to protect groundwater and prevent exceedances of groundwater quality objectives.

F. Notification of New Categorical or Significant Industrial Users. Ninety days prior to connection and startup of any new Categorical Industrial User[2] (CIU) or Significant Industrial User[3] (SIU) generating non-domestic wastewater, the Permittee shall notify the Executive Officer in writing and provide an evaluation to determine if the WWTF may accept the waste stream. Upon concurrence by the Executive Officer, the WWTF may accept this waste stream provided approved pretreatment and monitoring are established.

G. Change in Ownership. In the event of any change in control or ownership of land or waste discharge facilities presently owned or controlled by the Permittee, the Permittee shall notify the succeeding owner or operator of existence of this Order, and the status of the Permittee's annual fee account. A copy of the notification shall be forwarded to the Regional Water Board.

H. Vested Rights. This Order does not convey any property rights of any sort or any exclusive privileges. The requirements prescribed herein do not authorize the commission of any act causing injury to persons or property, nor protect the Permittee from liability under federal, state, or local laws, nor create a vested right for the Permittee to continue the waste discharge.

I. Monitoring and Reporting. The Permittee shall comply with the Monitoring and Reporting Program and any modifications to these documents as specified by the Regional Water Board Executive Officer. Chemical, bacteriological, and bioassay analyses shall be

---

[2] A Categorical Industrial User is an industrial user subject to national categorical pretreatment standards.

[3] A Significant Industrial User *[40 CFR 403.3(v)]* includes "(1) All users subject to categorical pretreatment standards under 40 CFR 403.6 and 40 CFR chapter I, subchapter N, except those designates as [Nonsignificant Categorical Industrial Users]… ; and (2) any other industrial user that discharges an average of 25,000 gpd or more of process wastewater to the POTW (excluding sanitary, noncontact cooling, and boiler blowdown wastewater); contributes a process wastestream that makes up 5 percent or more of the average dry-weather hydraulic or organic capacity of the POTW treatment plant; or is designated as such by the POTW on the basis that the industrial user has a reasonable potential for adversely affecting the POTW's operation or for violating any pretreatment standard or requirement [in accordance with 40 CFR 403.8 (f)(6)]." (USEPA June 2011, Introduction to the National Pretreatment Program).

conducted at a laboratory certified for such analyses by the Divisin of Drinking Water Programs at the State Water Resources Control Board. The Permittee shall comply with the MRP in Attachment B of this Order and any future revisions thereto.

J. **Records Retention.** The Permittee shall maintain records of all monitoring information, including calibration and maintenance records and all strip chart recordings for continuous monitoring instrumentation, copies of all reports required by this Order, and records of all data used to complete the application for this Order, for a period of at least three (3) years from the date of the sample, measurement, report or application. This period may be extended by request of the Regional Water Board Executive Officer.

K. **Inspections.** The Permittee shall permit authorized staff of the Regional Water Board the following:

1. Entrance to the premises in which treatment, collection or management of waste occurs, where an effluent source is located or in which any records required by this Order are kept;

2. Access to inspect and copy any monitoring equipment or records required for compliance with terms and conditions of this Order; and

3. Access to sample any discharge or monitoring location associated with the Facility.

L. **Noncompliance**. In the event the Permittee is unable to comply with any of the conditions of this Order due to breakdown of waste treatment equipment, accidents caused by human error or negligence, or other causes such as acts of nature, the Permittee shall notify the Regional Water Board Executive Officer by telephone as soon as it or its agents have knowledge of the incident and confirm this notification in writing within five (5) business days of the telephone notification. The written notification shall include pertinent information explaining reasons for the noncompliance and shall indicate the steps taken to correct the problem and the dates thereof, and the steps being taken to prevent the problem from recurring.

M. **Revision of Requirements.** The Regional Water Board will review this Order periodically and may revise requirements when necessary.

N. **Operator Certification.** Supervisors and operators of wastewater treatment plants shall possess a certificate of appropriate grade in accordance with title 23, California Code of Regulations, section 3680. The State Water Board may accept experience in lieu of qualification training. In lieu of a properly certified wastewater treatment plant operator, the State Water Board may approve use of a water treatment plant operator of appropriate grade certified by the State Water Board where water recycling is involved.

O. **Adequate Capacity.** If the Permittee's wastewater treatment plant will reach capacity within 4 years, the Permittee shall notify the Regional Water Board. A copy of such notification shall be sent to appropriate local elected officials, local permitting agencies, and the press. Factors to be evaluated in assessing reserve capacity shall include, at a minimum, (1) comparison of the wet weather design flow with the highest daily flow, and (2) comparison of the average dry weather design flow with the lowest 30-day flow.

DRAFT

The Permittee shall demonstrate that adequate steps are being taken to address the capacity problem. The Permittee shall submit a technical report to the Regional Water Board showing how flow volumes will be prevented from exceeding capacity, or how capacity will be increased, within 120 days after providing notification to the Regional Water Board, or within 120 days after receipt of Regional Water Board notification, that the Facility will reach capacity within 4 years. The time for filing the required technical report may be extended by the Regional Water Board. An extension of 30 days may be granted by the Executive Officer, and longer extensions may be granted by the Regional Water Board itself (title 23, Cal. Code of Regs., section 2232).

P. Special Studies, Technical Reports, and Additional Monitoring Requirements.

1. **Recycled Water Operation and Maintenance/ Irrigation Lease Agreement.** Ninety days prior to operation of the irrigation system, the Permittee shall submit a copy of the executed lease agreement for the irrigation area that identifies BMPs and operational practices that will be implemented to achieve efficient irrigation at its recycled water use site to ensure that hydraulic and nutrient agronomic rates are not exceeded. The lease agreement shall address, at a minimum, the following BMPs:

   a. Correction of leaks (for example, from sprinkler heads) within 72 hours of learning of the leak, or prior to the release of 1,000 gallons, whichever comes first.
   b. Proper aim of sprinkler heads;
   c. Proper operation of the irrigation system;
   d. Refraining from application during precipitation events, on water-saturated or frozen ground;
   e. Application of recycled water at an agronomic rate that does not exceed the water or nutrient demand of the crop or vegetation being irrigated;
   f. Maintenance of recycled water infrastructure (pipelines, pumps, etc.) to prevent and minimize breakage and leaks; and
   g. Notification of the City within 12 hours if a spill or discharge to surface waters occurs.
   h. Implementation of the Permittee's Recycled Water Engineering Report.

2. **Salt Source Control and Infiltration Reduction Workplan –** During the term of this Order, the Permittee shall complete the following tasks, in compliance with the following time schedule:

   a. By **December 1, 2015**, submit for Regional Water Board staff's concurrence, a workplan for the reduction of salt effluent concentrations by setting a schedule to complete collection system repair and upgrade work to reduce groundwater infiltration.

3. **Wastewater Treatment Containment and Monitoring Plan** – By **January 1, 2016**, the Permittee shall do either of the following:

   a. Submit for Executive Officer concurrence, a groundwater monitoring plan to assess the impacts of discharges from the wastewater treatment facility; or

DRAFT

b. Submit a plan for Executive Officer concurrence to minimize discharges to groundwater from lagoon No. 2. Implementation of the plan shall occur as soon as possible, but no later than January 1, 2025. Such a plan shall include financial estimates of all work to be performed and assurances that the Permittee will reserve the funds for the designated purpose.

X. COMPLIANCE DETERMINATION

Compliance with the effluent limitations contained in section IV of this Order will be determined as specified below.

A. Average Daily Dry Weather Flow (ADWF)

The highest daily dry weather flow of waste through the treatment plant measured continuously and averaged over three consecutive dry weather months each year.

B. Average Monthly Effluent Limitation (AMEL)

The arithmetic mean of all samples collected in a calendar month, calculated as the sum of all samples in a calendar month divided by the number of samples. If only one sample is collected in a calendar month, that sample result will constitute the monthly average and daily maximum results for the purpose of determining compliance with effluent limitations.

If the average of daily discharges over a calendar month exceeds the AMEL for a given parameter, this will represent a single violation, though the Permittee will be considered out of compliance for each day of that month for that parameter (e.g., resulting in 31 days of non-compliance in a 31-day month). If only a single sample is taken during the calendar month and the analytical result for that sample exceeds the AMEL, the Permittee will be considered out of compliance for that calendar month.

C. Average Annual Effluent Limitation (AAEL)

The arithmetic mean of all samples collected in a calendar year, calculated as the sum of all samples in a calendar year divided by the number of samples. If only one sample is collected in a calendar year, that sample result will constitute the annual average result for the purpose of determining compliance with effluent limitations.

If the average discharges over a calendar year exceeds the AAEL for a given parameter, this will represent a single violation, though the Permittee will be considered out of compliance for each day of that year for that parameter (e.g., resulting in 365 days of non-compliance in a 365 day-year). If only a single sample is taken during the calendar year and the analytical result for that sample exceeds the AAEL, the Permittee will be considered out of compliance for that calendar year. .

D. Instantaneous Minimum Effluent Limitations

If the analytical result of a single grab sample is lower than the instantaneous minimum effluent limitation for a parameter, the Permittee will be considered out of compliance for that parameter for that single sample. Non-compliance for each sample will be considered separately (e.g., the results of two grab samples taken within a calendar day

DRAFT

that both are lower than the instantaneous minimum effluent limitation would result in two instances of non-compliance with the instantaneous minimum effluent limitation).

E. Instantaneous Maximum Effluent Limitations

If the analytical result of a single grab sample is higher than the instantaneous maximum effluent limitation for a parameter, the Permittee will be considered out of compliance for that parameter for that single sample. Non-compliance for each sample will be considered separately (e.g., the results of two grab samples taken within a calendar day that both exceed the instantaneous maximum effluent limitation would result in two instances of non-compliance with the instantaneous maximum effluent limitation).

F. Bacteriological Limitations

1. Median. The median is the central tendency concentration of the pollutant. The data set shall be ranked from low to high, ranking the ND concentrations lowest, DNQ determinations next, followed by quantified values. The order of the individual ND and DNQ determinations is not important. The median value is determined based on the number of data points in the data set. If the data set has an odd number of data points, then the median is the middle value. If the data set has an even number of data points, the median is the average of the two middle values, unless one or both points are ND or DNQ, in which case the median value shall be the lower of the two middle data points. DNQ is lower than a detected value, and ND is lower than DNQ.

2. Compliance with the 7-day median will be determined as a rolling median during periods when sampling occurs more frequently than weekly. During periods when sampling is weekly, this requirement shall apply to each weekly sample.

DRAFT

ATTACHMENT A – MAPS AND DIAGRAMS

Last Saved: 6/3/2014 4:57:10 PM chardy; W:\Clients\524 Adkins Consulting\06-12-04 Tulelake WWTP\GIS\Figures\RWD Fig 1-1 Tulelake WWTF Vicinity.mxd

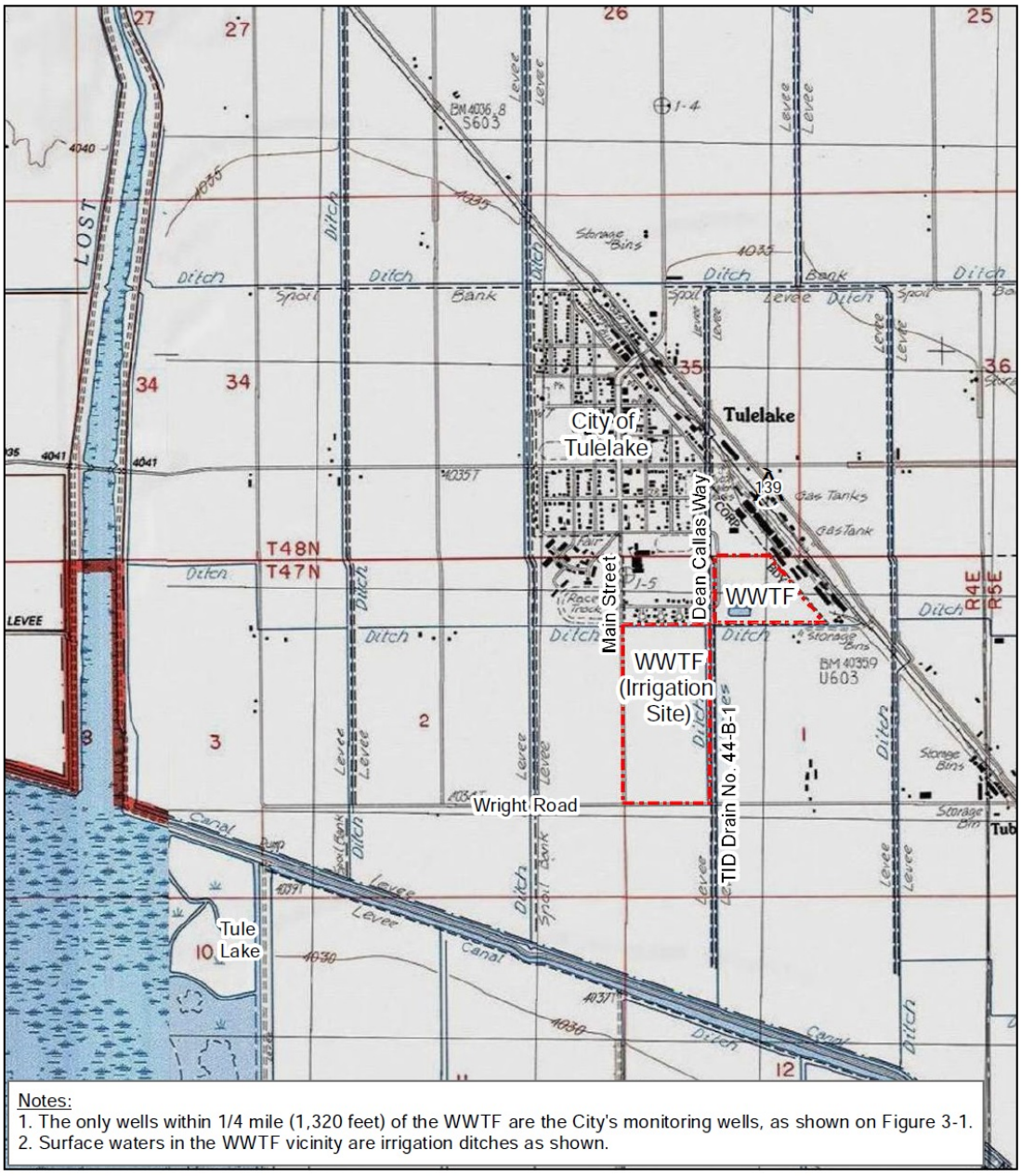

Notes:
1. The only wells within 1/4 mile (1,320 feet) of the WWTF are the City's monitoring wells, as shown on Figure 3-1.
2. Surface waters in the WWTF vicinity are irrigation ditches as shown.

N

0 1,000 2,000
Scale in Feet

FIGURE 1-1

City of Tulelake
Report of Waste Discharge
WASTEWATER TREATMENT FACILITY
VICINITY MAP

WEST YOST ASSOCIATES
Consulting Engineers

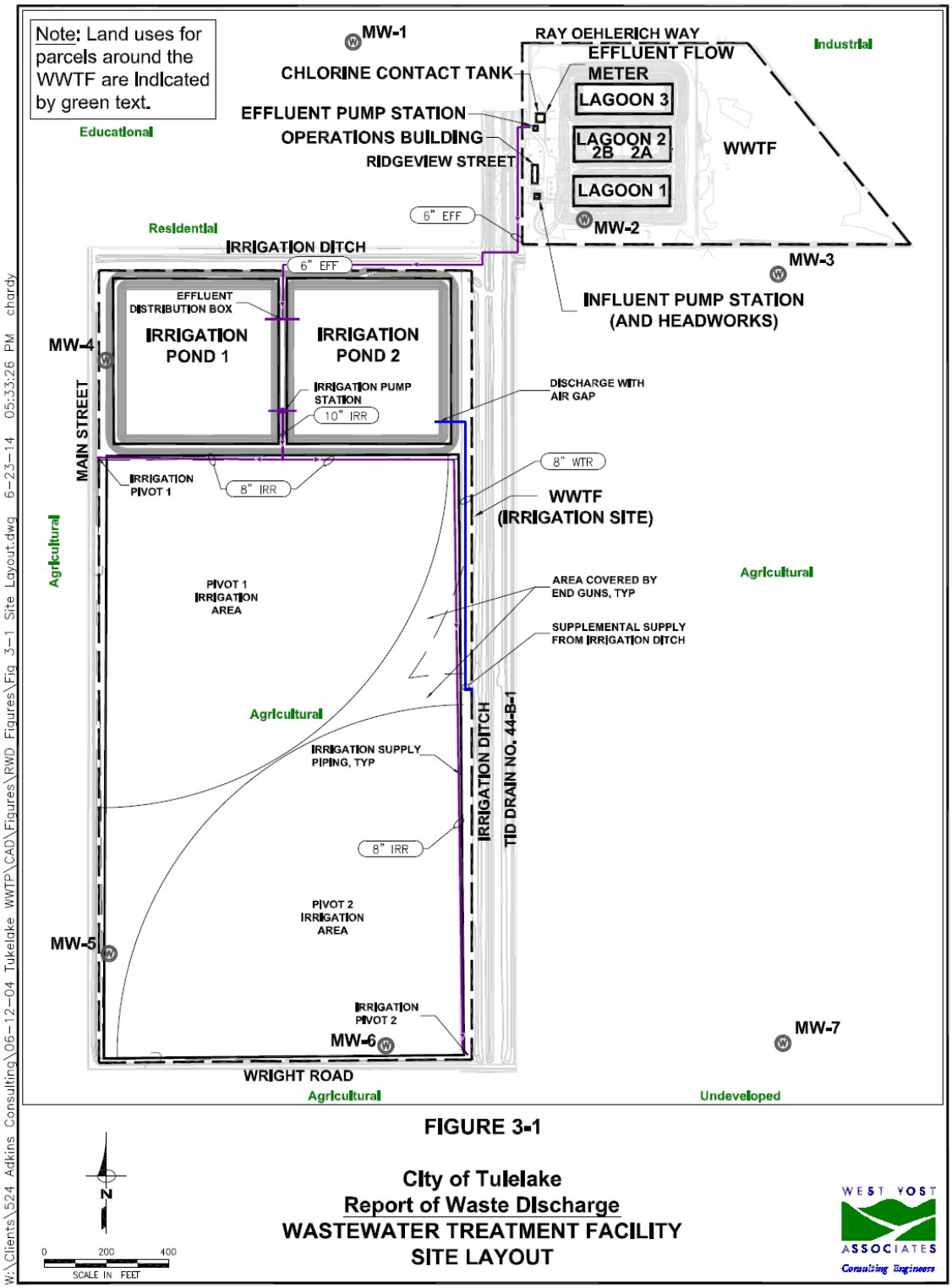

FIGURE 3-1

City of Tulelake
Report of Waste Discharge
WASTEWATER TREATMENT FACILITY
SITE LAYOUT

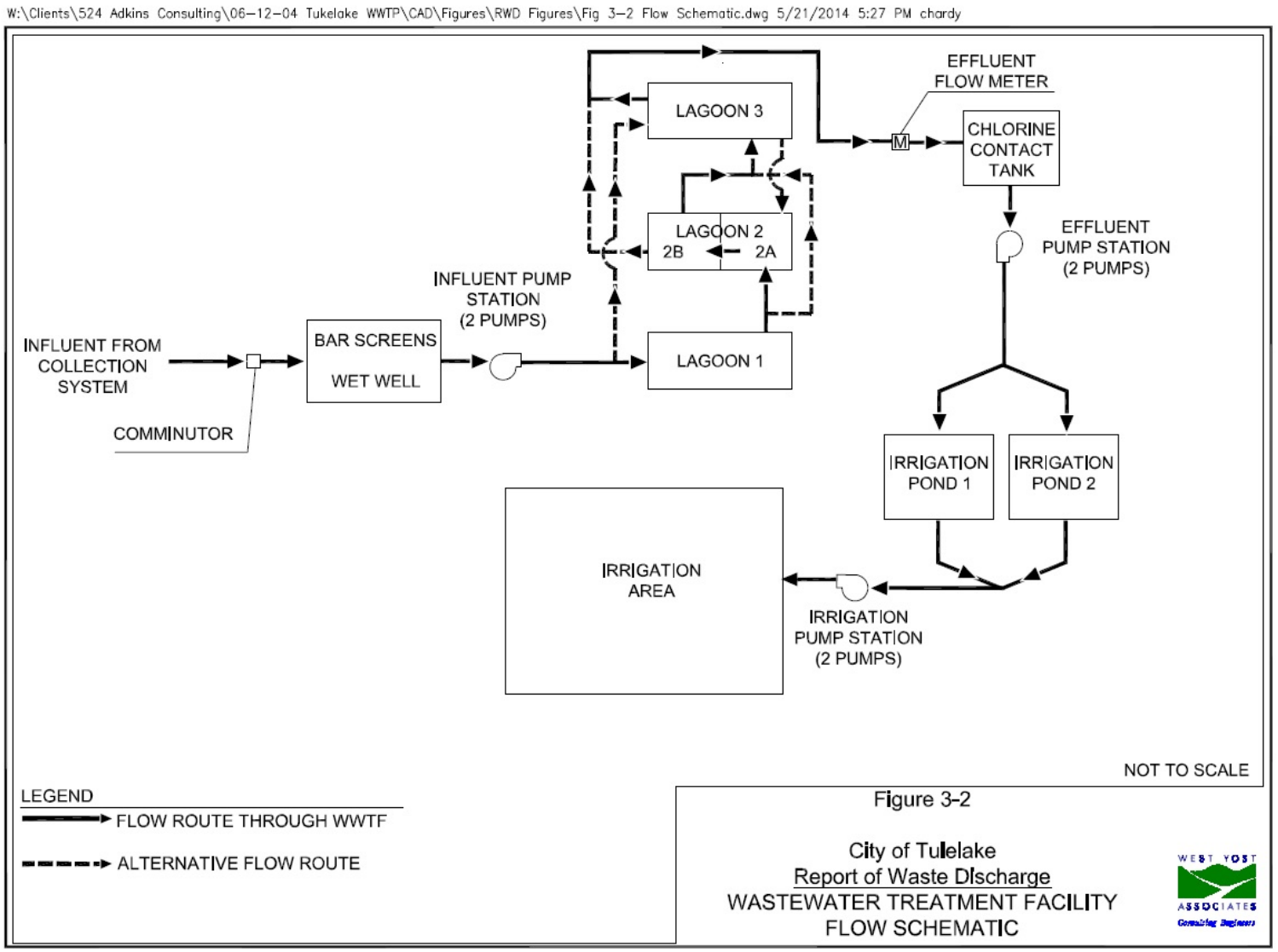
W:\Clients\524 Adkins Consulting\06-12-04 Tulelake WWTP\CAD\Figures\RWD Figures\Fig 3-2 Flow Schematic.dwg 5/21/2014 5:27 PM chardy
EFFLUENT FLOW METER
LAGOON 3
M
CHLORINE CONTACT TANK
LAGOON 2
2B
2A
EFFLUENT PUMP STATION (2 PUMPS)
INFLUENT PUMP STATION (2 PUMPS)
INFLUENT FROM COLLECTION SYSTEM
BAR SCREENS
WET WELL
LAGOON 1
COMMINUTOR
IRRIGATION POND 1
IRRIGATION POND 2
IRRIGATION AREA
IRRIGATION PUMP STATION (2 PUMPS)
NOT TO SCALE
LEGEND
FLOW ROUTE THROUGH WWTF
ALTERNATIVE FLOW ROUTE
Figure 3-2
City of Tulelake
Report of Waste Discharge
WASTEWATER TREATMENT FACILITY
FLOW SCHEMATIC
WEST YOST ASSOCIATES
Consulting Engineers

ATTACHMENT B – MONITORING AND REPORTING PROGRAM

Table of Contents

I. General Monitoring Provisions B-2
II. Monitoring Locations B-2
III. Influent Monitoring Requirements B-3
IV. Effluent Monitoring Requirements B-3
V. Receiving Water Monitoring Requirements B-4
VI. Reporting Requirements B-5

List of Tables

Table B-1. Monitoring Station Locations B-2
Table B-2. Influent Monitoring – Location INF-001 ..... B-3
Table B-3. Effluent Monitoring – Location EFF-001 ..... B-3
Table B-4. Groundwater Monitoring – Wells MWs-1,4,5,6,7 ..... B-4
Table B-5. Monitoring Periods and Reporting Schedule B-6
Table B-6. Reporting Requirement Summary Table B-9

DRAFT

ATTACHMENT B – MONITORING AND REPORTING PROGRAM (MRP)

California Water Code section 13267 authorizes the Regional Water Quality Control Board (Regional Water Board) to require technical and monitoring reports. This MRP establishes monitoring and reporting requirements, which implement California regulations.

I. GENERAL MONITORING PROVISIONS

A. Composite samples may be taken by a proportional sampling device approved by the Executive Officer or by grab samples composited in proportion to flow. In compositing grab samples, the sampling interval shall not exceed 1 hour.

B. If the Permittee monitors any pollutant more frequently than required by this Order, using test procedures as specified in this Order, the results of this monitoring shall be included in the calculation and reporting of the data submitted in the monthly and annual self-monitoring reports.

C. Laboratories analyzing monitoring samples shall be certified by the State Water Resources Control Board in accordance with the provision of Water Code section 13176, and must include quality assurance/quality control data with their reports.

D. Compliance and reasonable potential monitoring analyses shall be conducted using commercially available and reasonably achievable detection limits that are lower than the applicable effluent limitation. If no minimum level (ML) value is below the effluent limitation, the lowest ML shall be selected as the reporting level (RL).

II. MONITORING LOCATIONS

The Permittee shall establish the following monitoring locations to demonstrate compliance with the effluent limitations, discharge specifications, and other requirements in this Order:

Table B-1. Monitoring Station Locations

Distribution Point Name	Monitoring Location Name	Monitoring Location Description
--	INF-001	Monitoring location at the headworks prior to treatment.
001	EFF-001	Monitoring location prior to recycled water storage ponds.
--	MW-1	Monitoring well to be located upgradient of the WWTF and irrigation site.
--	MW-4	Monitoring well to be located at the western downgradient perimeter of the recycled water storage ponds.
--	MW-5	Monitoring well to be located at the southwestern downgradient perimeter of the recycled water irrigation site.
--	MW-6	Monitoring well to be located at the southeastern downgradient perimeter of the recycled water irrigation site (AKA Boyd South).
--	MW-7	Monitoring well to be located east and upgradient of MW-6 and the recycled water irrigation site. (AKA Dunlea South)

DRAFT

III. INFLUENT MONITORING REQUIREMENTS

A. Monitoring Location INF-001

1. The Permittee shall monitor treated effluent at Monitoring Location INF-001 as follows:

Table B-2. Influent Monitoring – Location INF-001

Parameter	Units	Sample Type	Minimum Sampling Frequency
Flow (Mean Daily)	mgd	Meter	Continuous

IV. EFFLUENT MONITORING REQUIREMENTS

A. Monitoring Location EFF-001

1. The Permittee shall monitor treated effluent at Monitoring Location EFF-001 as follows:

Table B-3. Effluent Monitoring – Location EFF-001

Parameter	Units	Sample Type	Minimum Sampling Frequency
Flow (Mean Daily)	mgd	Meter	Continuous
pH	std units	Field Grab	Quarterly
Biochemical Oxygen Demand (5-day @ 20°C)	mg/L	Grab	Quarterly
Total Dissolved Solids	mg/L	Grab	Quarterly
Conductivity	µS/cm	Grab	Quarterly
Chloride	mg/L	Grab	Quarterly
Sodium	mg/L	Grab	Quarterly
Nitrate, as N	mg/L	Grab	Quarterly
Nitrite, as N	mg/L	Grab	Quarterly
Total Kjeldahl Nitrogen	mg/L	Grab	Quarterly
Bis(2-Ethylhexyl)Phthalate	µg/L	Grab	Quarterly
Carbon Tetrachloride	µg/L	Grab	Quarterly
Cyanide	µg/L	Grab	Quarterly
Bromodichloromethane	µg/L	Grab	Quarterly
Chloroform	µg/L	Grab	Quarterly
Toluene	µg/L	Grab	Quarterly
Aluminum, dissolved	µg/L	Grab	Quarterly
Antimony, dissolved	µg/L	Grab	Quarterly

DRAFT

Table B-3. Effluent Monitoring – Location EFF-001

Parameter	Units	Sample Type	Minimum Sampling Frequency
Arsenic, dissolved	µg/L	Grab	Quarterly
Chromium VI, dissolved	µg/L	Grab	Quarterly
Copper, dissolved	µg/L	Grab	Quarterly
Lead, dissolved	µg/L	Grab	Quarterly
Molybdenum, dissolved	µg/L	Grab	Quarterly
Nickel, dissolved	µg/L	Grab	Quarterly
Vanadium, dissolved	µg/L	Grab	Quarterly
Title 22 Pollutants[1]	µg/L	Grab	once / 3 Years

1. Title 22 Pollutants refers to those constituents for which primary and secondary Maximum Contaminant Levels (MCLs) have been established in title 22, Division 4, Chapter 15, Articles 4 and 5.5 of the California Code of Regulations.

V. RECEIVING WATER MONITORING REQUIREMENTS

A. Groundwater Monitoring

1. The Permittee shall monitor groundwater in the groundwater monitoring wells as follows:

Table B-4. Groundwater Monitoring – Wells MWs-1,4,5,6,7

Parameter	Units	Sample Type	Minimum Sampling Frequency
Depth to Groundwater	0.01 feet	Grab	Quarterly
pH	std units	Field Grab	Quarterly
Biochemical Oxygen Demand (5-day @ 20°C)	mg/L	Grab	Quarterly
Total Coliform Organisms	MPN/100mL	Grab	Quarterly
Total Dissolved Solids	mg/L	Grab	Quarterly
Conductivity	µS/cm	Grab	Quarterly
Chloride	mg/L	Grab	Quarterly
Sodium	mg/L	Grab	Quarterly
Nitrate, as N	mg/L	Grab	Quarterly
Nitrite, as N	mg/L	Grab	Quarterly
Total Kjeldahl Nitrogen	mg/L	Grab	Quarterly
Bis(2-Ethylhexyl)Phthalate	µg/L	Grab	Quarterly
Carbon Tetrachloride	µg/L	Grab	Quarterly
Cyanide	µg/L	Grab	Quarterly
Bromodichloromethane	µg/L	Grab	Quarterly
Chloroform	µg/L	Grab	Quarterly

DRAFT

Table B-4. Groundwater Monitoring – Wells MWs-1,4,5,6,7

Parameter	Units	Sample Type	Minimum Sampling Frequency
Toluene	µg/L	Grab	Quarterly
Aluminum, dissolved	µg/L	Grab	Quarterly
Antimony, dissolved	µg/L	Grab	Quarterly
Arsenic, dissolved	µg/L	Grab	Quarterly
Chromium VI, dissolved	µg/L	Grab	Quarterly
Copper, dissolved	µg/L	Grab	Quarterly
Lead, dissolved	µg/L	Grab	Quarterly
Molybdenum, dissolved	µg/L	Grab	Quarterly
Nickel, dissolved	µg/L	Grab	Quarterly
Vanadium, dissolved	µg/L	Grab	Quarterly
Title 22 Pollutants[1]	µg/L	Grab	once / 3 Years

1. Title 22 Pollutants refers to those constituents for which primary and secondary Maximum Contaminant Levels (MCLs) have been established in title 22, Division 4, Chapter 15, Articles 4 and 5.5 of the California Code of Regulations.

VI. REPORTING REQUIREMENTS

A. Self-Monitoring Reports (SMRs)

1. Effective June 2, 2014, all regulatory documents, data, correspondence, or other materials should be submitted to the Regional Water Board via e-mail to NorthCoast@waterboards.ca.gov or on disk (CD or DVD) in a Portable Document Format (PDF) file in lieu of paper-sourced documents. The guidelines for electronic submittal of documents can be found on the Regional Water Board website at http://www.waterboards.ca.gov/northcoast.

2. The Permittee shall submit quarterly SMRs including the results for all monitoring specified in this MRP. If the Permittee monitors any pollutant more frequently than required by this Order, the results of this monitoring shall be included in the calculations and reporting of the data submitted in the SMR.

3. All monitoring results shall include complete laboratory data sheets for each analysis and be submitted in conjunction with the quarterly SMR on the first day of the second month following the quarter. Annual summary reports shall be submitted by March 1 of each year.

4. Monitoring periods for all required monitoring shall be completed according to the following schedule:

DRAFT

Table B-5. Monitoring Periods and Reporting Schedule

Sampling Frequency	Monitoring Period Begins On	Monitoring Period
Continuous	January 1, 2015	All
Daily	January 1, 2015	(Midnight through 11:59 PM) or any 24-hour period that reasonably represents a calendar day for purposes of sampling.
Monthly	January 1, 2015	1st day of calendar month through last day of calendar month
Quarterly	January 1, 2015	January through March April through June July through September October through December
Twice / Year	January 1, 2015	June and December
Annually	January 1, 2015	January 1 through December 31
Once / 3 Years	January 1, 2015	January 1, 2015 through December 31, 2017 and so forth

5. The Permittee shall report with each sample result the applicable ML, the RL and the current MDL, as determined by the procedure in Standard Methods.

The Permittee shall report the results of analytical determinations for the presence of chemical constituents in a sample using the following reporting protocols:

a. Sample results greater than or equal to the reported ML shall be reported as measured by the laboratory (i.e., the measured chemical concentration in the sample).

b. Sample results less than the RL, but greater than or equal to the laboratory's MDL, shall be reported as "Detected, but Not Quantified," or DNQ. The estimated chemical concentration of the sample shall also be reported.

For the purposes of data collection, the laboratory shall write the estimated chemical concentration next to DNQ as well as the words "Estimated Concentration" (may be shortened to "Est. Conc."). The laboratory may, if such information is available, include numerical estimates of the data quality for the reported result. Numerical estimates of data quality may be percent accuracy (+ a percentage of the reported value), numerical ranges (low to high), or any other means considered appropriate by the laboratory.

c. Sample results less than the laboratory's MDL shall be reported as "Not Detected," or ND.

d. Permittees are to instruct laboratories to establish calibration standards so that the ML value (or its equivalent if there is differential treatment of samples relative to calibration standards) is the lowest calibration standard. At no time is the Permittee to use analytical data derived from extrapolation beyond the lowest point of the calibration curve.

DRAFT

6. The Permittee shall arrange all reported data in a tabular format. The data shall be summarized to clearly illustrate whether the facility is operating in compliance with interim and/or final effluent limitations. The Permittee is not required to duplicate the submittal of data that is entered in a tabular format within CIWQS. When electronic submittal of data is required and CIWQS does not provide for entry into a tabular format within the system, the Permittee shall electronically submit the data in a tabular format as an attachment.

7. The Permittee shall attach a cover letter to the SMR. The information contained in the cover letter shall clearly identify:

   a. Facility name and address;
   b. WDID number;
   c. Applicable period of monitoring and reporting;
   d. Violations of the WDRs (identified violations must include a description of the requirement that was violated and a description of the violation);
   e. Corrective actions taken or planned; and
   f. The proposed time schedule for corrective actions.
   g. SMRs must be submitted to the Regional Water Board, signed and certified as required by the General Provisions, to the email address: Northcoast@waterboards.ca.gov.

B. Other Reports

1. Spill Notification

a. Spills and Unauthorized Discharges. Information regarding all spills and unauthorized discharges (except SSOs and recycled water) that may endanger health or the environment shall be provided orally to the Regional Water Board[1] within 24 hours from the time the Permittee becomes aware of the circumstances and a written report shall also be provided within five (5) days of the time the Permittee becomes aware of the circumstances, in accordance with Section V.E of Attachment D.

Information to be provided verbally to the Regional Water Board includes:

i. Name and contact information of caller;

ii. Date, time and location of spill occurrence;

iii. Estimates of spill volume, rate of flow, and spill duration, if available and reasonably accurate;

[1] The contact number of the Regional Water Board during normal business hours is (707) 576-2220. After normal business hours, spill reporting to CalEMA will satisfy the 24 hour spill reporting requirement for the Regional Water Board. The contact number for spill reporting for the CalEMA is (800) 852-7550.

DRAFT

iv. Surface water bodies impacted, if any;

v. Cause of spill, if known at the time of the notification;

vi. Cleanup actions taken or repairs made at the time of the notification; and

vii. Responding agencies.

b. **Sanitary Sewer Overflows.** Notification and reporting of sanitary sewer overflows is conducted in accordance with the requirements of Order No. 2006-0003-DWQ (Statewide General WDRs for Sanitary Sewer Systems) and WQ 2013-0058-EXEC.

2. **Annual Report.** The Permittee shall submit an annual report to the Regional Water Board for each calendar year. The report shall be submitted by March 1of the following year. The report shall, at a minimum, include the following:

a. **Monitoring Data Summaries.** Both tabular and, where appropriate, graphical summaries of the monitoring data and disposal records from the previous year. If the Permittee monitors any pollutant more frequently than required by this Order, using test procedures approved under section Part 136 or as specified in this Order, the results of this monitoring shall be included in the calculation and report of the data submitted in the SMR.

b. **Compliance Reporting.** A comprehensive discussion of the Facility's compliance (or lack thereof) with all effluent limitations and other WDRs, and the corrective actions taken or planned, which may be needed to bring the discharge into full compliance with the Order.

c. **Sludge and Biosolids.** The Permittee shall report the amount of sludge or biosolids placed in a landfill and the landfill(s) which received the sludge or biosolids.

3. **Signatory Requirements.** All Report of Waste Discharge applications submitted to the Regional Water Board shall be signed by a principal Executive Officer, ranking elected official.

a. Reports required by this Order and other information requested by the Regional Water Board may be signed by a duly authorized representative provided:

i. The authorization is made in writing by a person described in paragraph (a) of this provision;

ii. The authorization specifies either an individual or a position having responsibility for the overall operation of the regulated facility or activity such as the position of plant manager, operator of a well or a well field, superintendent, position of equivalent responsibility, or an individual or position having overall responsibility for environmental matters for the entity; and

DRAFT

iii. The written authorization is submitted to the Regional Water Board prior to or together with any reports, information, or applications signed by the authorized representative.

b. Any person signing a document under paragraph (a) or (b) of this provision shall make the following certification:

"I certify under penalty of law that this document and all attachments were prepared under my direction or supervision in accordance with a system designed to assure that qualified personnel properly gather and evaluate the information submitted. Based on my inquiry of the person or persons who manage the system, or those persons directly responsible for gathering the information, the information submitted, is, to the best of my knowledge and belief, true, accurate, and complete. I am aware that there are significant penalties for submitting false information, including the possibility of fine and imprisonment for knowing violations."

C. Reporting Requirement Summary Table

1. The following table summarizes all reporting requirements in this Order:

Table B-6. Reporting Requirement Summary Table

Report	Due Date(s)	Section of this Order with Requirements
Monthly SMR	1st day of the second month after the respective reporting period (i.e. the January SMR is due March 1)	N/A
Quarterly SMR	1st day of the second month after the respective reporting period (i.e. the first quarter SMR is due May 1)	MRP sections IV and V, VI.A
Annual SMR	By March 1 each year	MRP sections VI.A and VI.b.2
Title 22 Report	Every three years after this Order becomes effective (i.e. April 1, 2018, 2021, 2024, etc.)	MRP sections IV and V, VI.A
Facility containment plan status updates	Every three years after this Order becomes effective (i.e. April 1, 2018, 2021, 2024, etc.)	WDRs section IX.P.3.b
Spill Reports	Within 5 days of becoming aware of the spill.	MRP sections VI.A and VI.B.1
Change in Discharge Report	Promptly	WDRs section E
Notification of New Categorical or Significant Industrial Users	90 days prior to connection or discharge into the collection system.	WDRs section VIII.F
Noncompliance Telephone Notification	Immediately	WDRs section VIII.L
Noncompliance Written Notification	Within 5 days of becoming aware of the noncompliance	WDRs section VIII.L
Adequate Capacity Notification	Within 4 years of reaching capacity	WDRs section VIII.O

DRAFT

Table B-6. Reporting Requirement Summary Table

Report	Due Date(s)	Section of this Order with Requirements
Recycled Water Operation and Maintenance/ Irrigation Lease Agreement	90 days prior to operation of the recycled water irrigation system	WDRs section VIII.P.1
Salt Source Control and Infiltration Reduction Workplan	December 1, 2015	WDRs section VIII.P.2
Wastewater Treatment Containment and Monitoring Plan	January 1, 2016	WDRs section VIII.P.3

DRAFT

ATTACHMENT C – FACT SHEET

I. FACILITY INFORMATION

A. Background

The City of Tulelake (hereinafter Permittee) is currently discharging to surface waters pursuant to Waste Discharge Requirements Order No. R1-2013-0029. On July 2, 2014, the Permittee submitted a Report of Waste Discharge (ROWD) applying for waste discharge requirements to recycle up to 0.18 mgd of treated wastewater from The City of Tulelake Wastewater Treatment Facility (hereinafter Facility) to irrigate crops on land owned by the Permittee.

B. General Facility Information

The Permittee owns and operates a wastewater collection, treatment, and recycling facility that provides sewerage service to the City. The wastewater system serves a population of approximately 1,010 and has 439 connections, of which 46 are commercial connections including a supermarket and agricultural potato storage facilities. There are no industrial users. The Permittee has historically accepted septage from commercial haulers, but the receiving facility was closed by March 4, 2013, to enhance compliance with effluent limits. This Order prohibits the Permittee from accepting septage to be discharged into the wastewater treatment facility.

Currently, the wastewater treatment and disposal facility is comprised of a gravity collection system, headworks, two aerated wastewater stabilization lagoons, two sand filters, chlorine contact chamber and a surface water discharge pipeline. The collection system consists of a conventional gravity collection system constructed around 1947 of vitrified clay pipes and brick manholes. Around 1976, two lift stations were constructed and, since then, approximately five percent of the collection system piping has been replaced with polyvinyl chloride (PVC) pipe. In 2002 the Permittee inspected a portion of the collection system with cameras and identified several problems with the pipe, installation, and inflow and infiltration. According to the ROWD, the 2013 per capita flow is 149 gallons per capita per day (gal/capita-day), which is significantly higher than typical urban residential flow rates of 48-103 gal/capita-day.

This Order authorizes the discharge of municipal wastewater, including domestic and commercial users. To assess the potential for impacts to groundwaters, the Permittee sampled the effluent and groundwaters for all constituents with associated title 22 MCLs and water quality objectives in the Basin Plan.

C. Planned Upgrades

The Permittee owns and operates a wastewater treatment and disposal facility and is in the design phases of developing a new recycled water storage and irrigation system. This Order is established in support of a treatment plant upgrade to rehabilitate the headworks with a new comminutor, bar screens, and influent pumps; convert the sand filter into a treatment lagoon (No. 3); dredge lagoon No. 1 and line lagoons 1 and 3 with synthetic liners; construct two irrigation storage ponds with an irrigation pump station; and develop a recycled water irrigation field. Upon

DRAFT

completion of the recycled water storage and reuse system, the Permittee intends to terminate its surface water discharge and associated NPDES permit, at which point this Order will control the treatment, storage, and reuse of the wastewater.

Attachment A provides a map of the area around the Facility, a site layout and schematic of the proposed upgrades.

D. Existing Effluent and Groundwater Quality

It is anticipated that the planned upgrades to the wastewater treatment facility will result in water quality better than represented by historic data. Still, as an oxidized wastewater system that treats to secondary standards, there are no design standards for many of the constituents of concern. As a result, a comparison of the existing wastewater quality to ambient background concentrations in groundwater is warranted.

The Permittee obtains its municipal water supply from deep groundwater aquifers approximately 2,600 feet below ground surface (bgs). There are various agricultural supply wells throughout the Tulelake sub basin, which are used to augment surface water supplies, but there is no evidence in the record of wells currently being used for domestic or municipal purposes in the vicinity of the proposed recycled water storage and irrigation areas.

According to the Department of Water Resources (DWR) Bulletin 118 and the referenced USGS geologic and hydrologic survey, water quality shifts toward higher concentrations of TDS "in proportion to the thickness or proximity of the lake deposits."[1] The recycled water storage and disposal site is centrally located within historic lake deposits and some degree of naturally elevated salts is expected in groundwater.

The elevated ambient background concentrations in groundwater for iron and manganese, above the respective MCLs, are also likely a function of the local hydrogeology. USGS Groundwater-Quality Data Series Report 688[2] indicates that nearby GAMA well ID CAMP-LU-02 with a well depth of 2,664 feet has elevated levels of iron above the secondary MCL and levels of manganese at approximately half of the secondary MCL. The ambient background concentrations in local shallow groundwaters within lake deposits for salts, iron and manganese are consistently higher than deeper aquifers, which is consistent with the findings of DWR and USGS.

E. Constituents of Concern

Ambient background TDS, conductivity, iron, and manganese concentrations in local groundwater already exceed the respective MCLs. As described above in section I.D, the elevated concentrations of TDS, iron, and manganese in shallow groundwaters are considered elevated due to natural conditions. Still, ongoing agricultural activity in the area since the development of the Klamath

---

[1] http://www.water.ca.gov/pubs/groundwater/bulletin_118/basindescriptions/1-2.01.pdf

[2] Groundwater-Quality Data in the Cascade Range and Modoc Plateau Study Unit, 2010: Results from the California Gama Program, Data Series 688, USDOI-USGS

DRAFT

Project by the Bureau of Reclamation around 1905 has had the potential to increase nitrogen concentrations and further increase salt concentrations in groundwater. Nitrogen and salt constituents including ammonia, nitrate, nitrite, TDS, conductivity, sodium and chloride are, therefore, also considered elevated in groundwater due to agricultural activities.

Ambient background groundwater concentrations for the following constituents are less than the respective MCLs and average effluent concentrations: nitrate, nitrite, bis (2-ethylhexyl)phthalate, carbon tetrachloride, cyanide, bromodichloromethane, chloroform, toluene, aluminum, antimony, arsenic, cadmium, hexavalent chromium, copper, lead and nickel. Discharges of these constituents have the potential to cause small increases in the groundwater concentrations above background, but, in all cases, below the respective MCL. As a result, this Order includes an antidegradation analysis for these constituents in the findings below.

F. Compliance with Groundwater Quality Objectives

State Water Resources Control Board Resolution No. 88-63 (the Sources of Drinking Water Policy) finds that all groundwaters of the State are suitable or potentially suitable for municipal or domestic water supply with certain exceptions that do not apply to the Site. Consistent with the Sources of Drinking Water Policy, the Basin Plan designates all groundwaters as having the potential beneficial use of municipal and domestic supply (MUN), however, the Chemical Constituents Water Quality Objective for Groundwaters in the Basin Plan applies to groundwaters used for MUN. The requirement of groundwater use for application of the chemical constituent groundwater quality objective is distinct from the same objective for surface waters, which more broadly specifies that the objective applies to all waters designated for use as MUN.[3] The relatively unique combination, within the North Coast Region, of existing deep aquifer municipal water supply within a region dominated by agricultural land use, the lack of MUN use of shallow groundwater, and elevated amient background concentrations for COCs from both natural and agricultural causes in shallow groundwater, make the near-term anticipated use of shallow groundwater in the vicinity of the recycled water storage and irrigation areas for MUN unlikely.

Since the discharges from the proposed recycled water system will be at a new location and will have the potential to degrade groundwaters for certain constituents, this Order requires treatment and containment to levels consistent with plant performance and at levels protective of MUN, except for COCs that already exceed the MCLs in groundwater due to natural and agricultural causes.

For elevated COCs in groundwater above MCLs due to natural and agricultural causes, this Order allows for discharges in excess of the respective MCLs based on the context-specific lack of use and unlikeliness of use of the local shallow groundwater for MUN. Accordingly, for these COCs, this Order requires the attainment of existing effluent quality or background quality of groundwater, whichever is of better quality. Currently, the existing effluent quality is better than background for these COCs. However, the Regional Water Board is currently developing waste discharge

[3] It may be appropriate to apply the chemical constituents water quality objective for groundwaters in other instances where groundwaters are not currently being used for MUN due to the Potential MUN designation, based on site-specific factors.

requirements for agricultural discharges of waste and, as a result, anticipates groundwater quality to improve over time for elevated COCs due to agricultural causes. The Permittee's recycled wastewater volume is very minor relative to the surrounding agricultural water use and it is, therefore, appropriate to regulate the Permittee's recycled wastewater effluent within the greater agricultural context. The State Policy for Water Quality Control for Recycled Water (Recycled Water Policy) finds that the best way to address salt impacts is through the development of regional or subregional SNMPs rather than through imposing requirements solely on individual recycled water projects. Until a subregional SNMP is developed, this Order requires the Permittee to develop and implement a Salt Source Control and Infiltration Reduction Workplan to ensure compliance with the MUN and AGR water quality objectives.

The Agricultural Supply (AGR) Water Quality Objective for Groundwaters in the Basin Plan requires that groundwaters used for AGR shall not contain concentrations of chemical constituents that adversely affect such beneficial uses. A common source of thresholds used to determine adverse effects to sensitive crops is the *Water Quality for Agriculture, GAO Irrigation and Drainage Paper 29 Rev 1*. The Permittee does not plan on using groundwaters for AGR and does not intend to grow salt sensitive crops. Still, nearby farmers may use groundwaters for AGR, but when local groundwaters are used for AGR, they are used to augment surface water supplies for agriculture, which have much lower concentrations of salts. Recycled water discharges of TDS and conductivity are much less than background concentrations and will likely improve groundwater quality for these constituents. Furthermore, this Order requires the Permittee to develop and implement a Salt Source Control and Infiltration Reduction Workplan to ensure compliance with the MUN and AGR water quality objectives. Discharges of recycled wastewater are, therefore, expected to comply with the groundwater quality objective for AGR.

According to the Report of Waste Discharge and available data, the ambient background concentrations in groundwater for iron and manganese are much greater than both the respective Maximum Contaminant Levels (MCLs) and effluent concentrations. Wastewater discharges, therefore, do not have the potential to degrade groundwater quality for these constituents.

G. Basis for Effluent Limitations

In establishing effluent limitations for COCs at a level that is the most protective of water quality, but also reflective of the best practicable treatment and control of the discharge, best professional judgement (BPJ) was used. Biochemical oxygen demand (BOD) is limited to the levels identified in the ROWD as achievable by the upgraded wastewater treatment facility based on existing available data. Other chemical specific effluent limitations were established at a level achievable by the Permittee using the general statistical data analysis functions of RPcalc (version 2.2) on available data. RPcalc calculates an upper confidence bound (UCB) "using the USEPA (1991) Technical Support Document for Water Quality-based Toxics Control method (TSD-LogNorm), which multiplies the sample maximum by a reasonable potential coefficient of variation multiplying factor under a lognormal distributional assumption. The TSD-LogNorm UCB can be characterized as a semi-parametric procedure." (Saiz, S. (2013, February 8) RPcalc User's Guide (version 2.2)). A coefficient of variation representing a 95th percent upper confidence bound on the 95th percentile of the lognormally transformed data was used to develop effluent limitations. This produces effluent limits that will be easily achievable by the Permittee on an average basis. The TSD-LogNorm UCB for bis (2-ethylhexyl) phthalate and dissolved aluminum are greater than the MCL. Since there has

been no demonstration of additional soil treatment and attenuative capacity, the effluent limits for these constituents were set equal to the respective MCLs. For dissolved aluminum, an effluent limitation set at the MCL coincides with a coefficient of variation consistent with the 55th percentile of the available data with a 95 percent confidence level. As a result, an interim limitation for aluminum is necessary to assure that compliance can be consistently achieved. The planned treatment upgrades will result in higher quality effluent that will likely comply with the final effluent limitation. If this is not the case, the Permittee will have time to develop a plan to reduce aluminum concentrations in the effluent. Moreover, additional data collected as required by the permit may be used to reevaluate effluent limitations and permit requirements in the future.

II. FINDINGS

A. Legal Authorities. This Order serves as Waste Discharge Requirements (WDRs) for discharges to land issued pursuant to section 13263 of the California Water Code (Water Code).

B. Basin Plan. As required by Water Code section 13263(a), these WDRs are crafted to implement the Water Quality Control Plan for the North Coast Region (Basin Plan), and in so doing, the Regional Water Board has taken into consideration the beneficial uses to be protected, the water quality objectives (both numeric and narrative) reasonably required for that purpose, other (including previous) waste discharges, the need to prevent nuisance, and the provisions of Water Code section 13241. The Basin Plan contains implementation plans and policies for protecting waters of the basin. The Basin Plan implements State Water Resources Control Board (State Water Board) Resolution No. 88-63, which established state policy that all waters, with certain exceptions, should be considered suitable or potentially suitable for municipal or domestic supply.

Thus, beneficial uses applicable to area groundwater within the Lost River Hydrologic Area to be protected are as follows:

1. Municipal and Domestic Supply (MUN)
2. Agricultural Water Supply (AGR)
3. Industrial Service Supply (IND)
4. Industrial Process Supply (PRO)
5. Groundwater Recharge (GWR)
6. Freshwater Replenishment (FRSH)

C. California Water Code. The California Water Code (Water Code) establishes the authority for the Regional Water Board to establish water quality objectives, impose discharge prohibitions, and prescribe waste discharge and water recycling requirements. Water Code section 13241 requires each regional board to "establish such water quality objectives in water quality control plans as in its judgment will ensure the reasonable protection of beneficial uses and the prevention of nuisance […]." The control of pollutants discharged is established through effluent limitations and other requirements in Waste Discharge Requirement permits. Water Code section 13243 provides that "A regional board, in a water quality control plan or in waste discharge requirements, may specify certain conditions or areas where the discharge of waste, or certain types of waste, will not be permitted. Water Code section 13260 et seq establishes regulations associated with the prescription of waste discharge requirements and Water Code Chapter 7 (section 13500 et seq) establishes regulations associated with the prescription of reclamation requirements.

DRAFT

It is the Regional Water Board's intent that this Order shall ensure attainment of water quality standards, applicable water quality objectives, and protection of beneficial uses of receiving waters. This Order therefore requires the Permittee to comply with all prohibitions, effluent limitations, discharge specifications, receiving water limitations, standard provisions, and monitoring and reporting requirements. The Order further prohibits discharges from causing violations of water quality objectives or causing conditions to occur that create a condition of nuisance or water quality impairment in receiving waters as a result of the discharge.

D. California Code of Regulations (CCR). The discharge authorized herein and the treatment and storage facilities associated with the discharge are exempt from the requirements of title 27, CCR, section 20005 et seq. The exemption, pursuant to section 20090(b) of title 27, allows for the exemption of discharges of wastewater if;

1. The applicable Regional Board has issued WDRs;
2. The discharge is in compliance with the applicable water quality control plan (Basin Plan); and
3. The wastewater does not need to be managed as a hazardous waste.

E. Recycled Water Policy. On February 3, 2009, the State Water Board adopted the Recycled Water Policy (State Water Board Resolution No. 2009-0011 as amended by Resolution No. 2013-0003) for the purpose of increasing the use of recycled water from municipal wastewater sources in a manner that implements state and federal water quality laws. The Recycled Water Policy became effective on May 14, 2009. The Recycled Water Policy provides direction to the regional water boards regarding the appropriate criteria to be used in issuing permits for recycled water projects and describes permitting criteria intended to streamline, and provide consistency for, the permitting of the vast majority of recycled water projects. Pertinent provisions and requirements of the policy have been incorporated into this Order to address conditions specific to the Discharger's plan to implement water recycling.

The Recycled Water Policy recognizes that some groundwater basins in the state contain salts and nutrients that exceed or threaten to exceed water quality objectives in the applicable Basin Plans, and that not all Basin Plans include adequate implementation procedures for achieving or ensuring compliance with the water quality objectives for salt or nutrients. The Recycled Water Policy further recognizes that these conditions can be caused by natural soils/conditions, discharges of waste, irrigation using surface water, groundwater or recycled water, and water supply augmentation using surface or recycled water, and that regulation of recycled water alone will not address these conditions. It is the intent of the Recycled Water Policy that salts and nutrients from all sources be managed on a basin-wide or watershed-wide basis in a manner that ensures attainment of water quality objectives and protection of beneficial uses. The Recycled Water Policy finds that the appropriate way to address salt and nutrient issues is through the development of regional or subregional salt and nutrient management plans (SNMPs) rather than through imposing requirements solely on individual recycled water projects.

This Order is consistent with the requirements of the Recycled Water Policy. Specifically, Water Recycling Specification IV.A.2 requires the Discharger to comply with any SNMPs that is developed in the future, consistent with Paragraphs 6 and 7(a), respectively, of the Recycled Water Policy.

DRAFT

This Order allows for increased use of recycled water consistent with the mandate established in the Recycled Water Policy to increase the use of recycled water in California.

F. Antidegradation Policy. The State Water Board adopted Resolution No. 68-16 (the Antidegradation Policy), which requires that existing quality of waters be maintained until it has been demonstrated to the State that any change will be consistent with maximum benefit to the people of the State, will not unreasonably affect beneficial uses and will not result in water quality less than that prescribed in the policies. The Regional Water Board's Basin Plan implements, and incorporates by reference, the State Antidegradation Policy.

In compliance with the Antidegradation Policy, this Order allows for the discharge of increased volumes of wastewater pollutants through an upgraded treatment facility at an existing location; from the storage of treated wastewater within two new recycled wastewater storage ponds; and through the irrigation reuse at a new discharge location, . In particular, compliance with this Order will result in the best practicable treatment or control of the discharge necessary to assure that a pollution or nuisance will not occur and the highest water quality consistent with the maximum benefit to the people of the State will be maintained. This conclusion is based on the following analysis:

1. The Permittee has been identified as a Small Economically Disadvantaged Community by the State Department of Financial Assistance and currently does not have the financial resources to include additional water quality protections beyond those required in this Order. The Permittee has received a total of $560,000 from the Community Development Block Grant to purchase land, and $6,000,000 to upgrade the wastewater treatment facility, and develop a recycled water storage and irrigation system. This project will have an overall improvement to water quality and benefit to the people of the State.

2. The design-quality of secondary-treated wastewater effluent will be of higher quality than historic effluent due to wastewater treatment plant rehabilitation and upgrades associated with the development of the recycled water irrigation system. In particular, dredging of the treatment lagoons will remove a likely source of accumulated pollutants; construction of a third lagoon will increase retention time and treatment effectiveness.

3. Construction of the recycled water irrigation system and compliance with this Order will satisfy the final task (Task No. 11) of Cease and Desist Order No. R1-2013-0030. This would complete an outstanding enforcement process that began on October 6, 2004, to bring the Facility into compliance with the Clean Water Act, the Water Code, and the Lost River TMDL.

4. The development of the recycled water irrigation system will enable the Permittee to terminate its noncompliant surface water discharge, which has been a source of aquatic toxicity and nutrients to a nutrient impaired waterbody for many years.

5. The Permittee must identify and require implementation of BMPs to prevent and minimize the potential for surface runoff of irrigation water. Additionally, irrigation at hydraulic agronomic rates will prevent or minimize the potential for irrigation runoff; discharges to surface waters are prohibited.

DRAFT

6. The use of recycled water provides a sustainable and drought-resistant source of irrigation water for agricultural uses and conserves surface water.

7. Although the nitrate concentrations in the existing discharge have been, on average, less than the primary MCL of 10 mg/L, the spray application of recycled wastewater and soil microbial activity will likely facilitate nitrification. Since the total nitrogen concentration in the existing wastewater effluent is, on average, approximately 21 mg/L, post-treatment nitrification has the potential to exceed the primary MCL for nitrate. This Order requires the Permittee to execute an Operation and Maintenance/Irrigation Lease Agreement that ensures irrigation of recycled water at agronomic rates reflecting the hydraulic and nutrient requirements of the use area and crop grown. Application at agronomic rates will mitigate any potential for groundwater degradation from the irrigation of recycled water. This Order also requires effluent and groundwater monitoring of nitrate and total nitrogen to ensure that degradation does not occur.

8. It is the intent of the Recycled Water Policy that salts and nutrients from all sources be managed on a basin-wide or watershed-wide basis, however, there is currently no basin or watershed-wide salt and nutrient management planning effort under way.

9. The Ambient background concentrations in groundwater are less than the respective MCLs and average effluent concentrations for the following constituents: nitrate, nitrite, bis (2-ethylhexyl)phthalate, carbon tetrachloride, cyanide, bromodichloromethane, chloroform, toluene, aluminum, antimony, arsenic, cadmium, hexavalent chromium, copper, lead and nickel. Discharges of these constituents have the potential to cause small increases in the groundwater concentrations above background, but, in all cases, below the respective MCLs. Such increases in groundwater concentrations, as a result of compliance with the requirements of this Order (including effluent limitations), will comply with the Antidegradation Policy. It is anticipated that the upgraded wastewater treatment facility will produce effluent at a quality higher than historical averages, but no design standards have been established for the treatment of each of these constituents. Effluent limitations for these constituents have been established, based on best professional judgement (BPJ) of historic plant performance using the TSD-Lognorm method on available data. This process complies with the Antidegradation Policy because it maintains the highest water quality consistent with maximum benefit to the people of the State by limiting the amount of groundwater degradation to that achievable by the Permittee without allowing discharges up to the full assimilative capacity in groundwater for each constituent.

10. There is no evidence in the record of drinking water or agricultural supply wells in the immediate vicinity of the treatment, storage, or reuse sites.

11. Attachment B of this Order requires ongoing effluent and groundwater monitoring for all potential constituents of concern to ensure that concentrations of pollutants will not adversely impact beneficial uses.

DRAFT

The preceding analysis demonstrates that there is sufficient reason to allow for the reuse and discharge of increased volume and concentration of wastewater, provided the terms of the Basin Plan, the Recycled Water Policy, and this Order are met.

This Order is consistent with the maximum benefit to people of the State because it: (i) allows continued operation of an existing wastewater treatment system; and (ii) eliminates a noncompliant surface water discharge; (iii) satisfies the requirements of a water quality enforcement order; (iv) allows for the beneficial reuse of wastewater; and (v) contains prohibitions and restrictions on the irrigation practice and (vi) requires monitoring of groundwater impacts or potential impacts from storage and reuse of treated wastewater.

G. Endangered Species Act. This Order does not authorize any act that results in the taking of a threatened or endangered species or any act that is now prohibited, or becomes prohibited in the future, under either the California Endangered Species Act (Fish and Game Code sections 2050 to 2097). The Permittee is responsible for meeting all requirements of the applicable Endangered Species Act.

H. Monitoring and Reporting. Water Code sections 13267 and 13383 authorize the Regional Water Board to require technical and monitoring reports. The Monitoring and Reporting Program establishes monitoring and reporting requirements to implement federal and State requirements. This Monitoring and Reporting Program is provided in Attachment B. The Executive Officer of the Regional Water Board is delegated the authority to modify the Monitoring and Reporting Program, as determined appropriate to protect water quality.

DRAFT