ORDER NO. R1-2015-0039
NPDES NO. CA0022870
WDID NO. 1B83129OMEN

WASTE DISCHARGE REQUIREMENTS AND WATER RECYCLING REQUIREMENTS

FOR THE

MENDOCINO CITY COMMUNITY SERVICES DISTRICT
WASTEWATER TREATMENT PLANT
MENDOCINO COUNTY

The following Permittee is subject to waste discharge requirements (WDRs) and water recycling requirements set forth in this Order:

Table 1. Permittee Information

Permittee	Mendocino City Community Services District (CSD)
Name of Facility	Mendocino City CSD Wastewater Treatment Plant
Facility Address	10500 Kelly Street
	Mendocino, CA 95460
	Mendocino County
Type of Facility	Publicly Owned Treatment Works (POTW)
Facility Design Flow	0.3 million gallons per day (mgd) (average dry weather treatment capacity) 1.0 mgd (peak daily wet weather treatment capacity)

Table 2. Discharge Location

Discharge Point	Effluent Description	Discharge Point Latitude (North)	Discharge Point Longitude (West)	Receiving Water
001	Tertiary treated wastewater	39° 18’ 21”	123° 48’ 30”	Pacific Ocean
002	Tertiary treated wastewater	--	--	Recycled Water System

Table 3. Administrative Information

This Order was adopted on:	**August 13, 2015**
This Order shall become effective on:	**October 1, 2015**
This Order shall expire on:	**September 30, 2020**
The Permittee shall file a Report of Waste Discharge as an application for reissuance of WDRs in accordance with title 23, California Code of Regulations, and an application for reissuance of a National Pollutant Discharge Elimination System (NPDES) permit no later than:	**April 3, 2020**
The U.S. Environmental Protection Agency (U.S. EPA) and the California Regional Water Quality Control Board, North Coast Region have classified this discharge as follows:	**Minor**

IT IS HEREBY ORDERED, that Waste Discharge Requirements (WDR) Order No. R1-2010-0020, Monitoring and Reporting Program (MRP) No. R1-2010-0020, and Water Reclamation Requirements Order No. 97-66, are rescinded upon the effective date of this Order except for enforcement purposes, and in order to meet the provisions contained in division 7 of the California Water Code (Water Code) (commencing with section 13000) and regulations and guidelines adopted thereunder, and the provisions of the federal Clean Water Act (CWA) and regulations and guidelines adopted thereunder, the Permittee shall comply with the requirements of this Order. This action in no way prevents the North Coast Regional Water Quality Control Board (Regional Water Board) from taking enforcement action for past violations of the previous permit.

I, Matthias St. John, Executive Officer, do hereby certify that this Order with all attachments is a full, true, and correct copy of the Order adopted by the California Regional Water Quality Control Board, North Coast Region, on **August 13, 2015.**

_____
Matthias St. John, Executive Officer

15_0039_MendocinoCityCSD_WWTP_NPDES

Contents

I. Facility Information 4
II. Findings 4
III. Discharge Prohibitions 4
IV. Effluent Limitations and Discharge Specifications 5
A. Effluent Limitations – Discharge Point 001 5
1. Final Effluent Limitations – Discharge Point 001 5
2. Interim Effluent Limitations – Not Applicable 6
B. Land Discharge Specifications – Not Applicable 6
C. Water Recycling Specifications and Requirements– Discharge Point 002 6
1. Water Recycling Specifications 6
2. Water Recycling Requirements 7
3. Other Requirements 11
V. Receiving Water Limitations 12
A. Surface Water Limitation 12
B. Groundwater Limitations 15
VI. Provisions 15
A. Standard Provisions 15
B. Monitoring and Reporting Program (MRP) Requirements 16
C. Special Provisions 16
1. Reopener Provisions 16
2. Special Studies, Technical Reports and Additional Monitoring Requirements 17
3. Best Management Practices and Pollution Prevention 18
4. Construction, Operation and Maintenance Specifications 19
5. Special Provisions for Municipal Facilities (POTWs Only) 20
6. Other Special Provisions 22
7. Compliance Schedules – Not Applicable 23
VII. Compliance Determination 23

Tables

Table 1. Permittee Information 1
Table 2. Discharge Location 1
Table 3. Administrative Information 2
Table 4. Effluent Limitations 5
Table 5. Recycling Discharge Specifications 7

Attachments

Attachment A – Definitions A-1
Attachment B – Map B-1
Attachment C – Flow Schematic C-1
Attachment D – Standard Provisions D-1
Attachment E – Monitoring and Reporting Program E-1
Attachment F – Fact Sheet F-1

I. FACILITY INFORMATION

Information describing the Mendocino City Community Services District (CSD) (Permittee), Mendocino City CSD Wastewater Treatment Plant (Facility) is summarized in Table 1 and in sections I and II of the Fact Sheet (Attachment F). Section I of the Fact Sheet also includes information regarding the Facility's permit application.

II. FINDINGS

The California Regional Water Quality Control Board, North Coast Region (Regional Water Board), finds:

A. Legal Authorities. This Order is issued pursuant to section 402 of the federal Clean Water Act (CWA) and implementing regulations adopted by the U.S. Environmental Protection Agency (U.S. EPA) and chapter 5.5, division 7 of the California Water Code (commencing with section 13370). It shall serve as a NPDES permit for point source discharges from this Facility to surface waters. This Order also serves as Waste Discharge Requirements (WDRs) pursuant to article 4, chapter 4, division 7 of the Water Code (commencing with section 13260).

B. Basis and Rationale for Requirements. The Regional Water Board developed the requirements in this Order based on information submitted as part of the Permittee's application, monitoring and reporting programs, and other available information. The Fact Sheet (Attachment F) contains background information and rationale for the requirements in this Order, and is hereby incorporated into this Order and constitutes Findings for this Order. Attachments A through E are also incorporated into this Order.

C. Provisions and Requirements Implementing State Law. The provisions/requirements in subsections III.E, III.F, III.H, IV.B, IV.C, V.B, VI.C.2.c, and VI.C.5 of this Order and sections VI, VII, IX.A, X.D.3, and X.E of the Monitoring and Reporting Program are included to implement state law only. These provisions/requirements are not required or authorized under the federal CWA; consequently, violations of these provisions/requirements are not subject to the enforcement remedies that are available for NPDES violations.

D. Notification of Interested Parties. The Regional Water Board has notified the Permittee and interested agencies and persons of its intent to prescribe WDRs for the discharge and has provided them with an opportunity to submit their written comments and recommendations. Details of the notification are provided in the Fact Sheet.

E. Consideration of Public Comment. The Regional Water Board, in a public meeting, heard and considered all comments pertaining to the discharge. Details of the Public Hearing are provided in the Fact Sheet.

III. DISCHARGE PROHIBITIONS

A. The discharge of any waste not disclosed by the Permittee or not within the reasonable contemplation of the Regional Water Board is prohibited.

B. Creation of pollution, contamination, or nuisance, as defined by section 13050 of the Water Code is prohibited.

C. The discharge of sludge or digester supernatant is prohibited, except as authorized under section VI.C.5.c of this Order (Sludge Disposal and Handling Requirements).

D. The discharge or recycling use of untreated or partially treated waste (receiving a lower level of treatment than described in section II.A of the Fact Sheet) from anywhere within the collection, treatment, or disposal systems is prohibited, except as provided for in section IV.C.2 (Recycling Specifications) and in Attachment D, Standard Provisions G (Bypass) and H (Upset).

E. Any sanitary sewer overflow (SSO) that results in a discharge of untreated or partially treated wastewater to (a) waters of the state or (b) land that creates pollution, contamination, or nuisance, as defined in Water Code section 13050 is prohibited.

F. The discharge of waste to land that is not owned by the Permittee, governed by District ordinance, or under agreement to use by the Permittee, or for which the Permittee has explicitly permitted such use, is prohibited, except for use for fire suppression as provided in title 22, sections 60307(a) and 60307(b) of the CCR.

G. The discharge of waste at any point not described in Finding II.B of the Fact Sheet or authorized by a permit issued by the State Water Board or another Regional Water Board is prohibited.

H. The discharge of recycled, filtered wastewater to a use area other than those designated for that purpose is prohibited.

I. The average dry weather flow through the Facility shall not exceed 0.3 mgd. Peak daily wet weather flows through the Facility shall not exceed 1.0 mgd. Compliance with this prohibition shall be determined as defined in sections VII.J and VII.K of this Order.

J. The discharge of any radiological, chemical, or biological warfare agent or high-level radioactive waste into waters of the state is prohibited.

K. The discharge of sludge directly into the ocean or into a waste stream that discharges to the ocean is prohibited.

L. The by-passing of untreated wastes containing concentrations of pollutants in excess of those of Ocean Plan Tables 1 or 2 (2012) is prohibited.

IV. EFFLUENT LIMITATIONS AND DISCHARGE SPECIFICATIONS

A. Effluent Limitations – Discharge Point 001

1. Final Effluent Limitations – Discharge Point 001

a. The discharge of treated wastewater shall maintain compliance with the following effluent limitations at Discharge Point 001, with compliance measured at Monitoring Locations EFF-001, EFF-002, and EFF-003 as described in the Monitoring and Reporting Program (MRP) (Attachment E).

Table 4. Effluent Limitations

Parameter	Units	Effluent Limitations[1]					
		Average Monthly	Average Weekly	Maximum Daily	Instantaneous Minimum	Instantaneous Maximum	6-Month Median
Biochemical Oxygen Demand 5-day @ 20°C (BOD_5)	mg/L	30	45	--	--	--	--
Oil and Grease	mg/L	25	40	--	--	75	--

Parameter	Units	Effluent Limitations[1]					
		Average Monthly	Average Weekly	Maximum Daily	Instantaneous Minimum	Instantaneous Maximum	6-Month Median
Total Suspended Solids (TSS)	mg/L	30	45	--	--	--	--
Settleable Solids	mL/L	1.0	1.5	--	--	3.0	--
Turbidity	NTU	75	100	--	--	225	--
pH	s.u.	--	--	--	6.0	9.0	--
Total Residual Chlorine	mg/L	--	--	0.81	--	6.06	0.20
TCDD Equivalents	µg/L	3.94×10^{-7}	--	--	--	--	--

Table Notes:
1. See Definitions in Attachment A and Compliance Determination discussion in section VII of this Order.

b. **Percent Removal**. The average monthly percent removal of BOD_5 and TSS shall not be less than 85 percent. Percent removal shall be determined from the monthly average value of influent wastewater concentration in comparison to the monthly average value of effluent concentration for the same constituent over the same time period as measured at Monitoring Locations INF-001 and EFF-001, respectively.

c. **Disinfection**. Disinfected effluent discharged from the wastewater treatment plant through Discharge Point 001 to the Pacific Ocean shall not contain total coliform bacteria exceeding the following concentrations, as measured at Monitoring Location EFF-002:

i. The median value of total coliform bacteria shall not exceed a Most Probable Number (MPN) of 70 per 100 milliliters (mL), in a calendar month; and

ii. No samples shall exceed an MPN of 230 per 100 mL.

2. Interim Effluent Limitations – Not Applicable

B. Land Discharge Specifications – Not Applicable

C. Water Recycling Specifications and Requirements– Discharge Point 002

1. Water Recycling Specifications

a. The Permittee shall maintain compliance with the following specifications at Discharge Point 002, with compliance measured at Monitoring Location REC-001 as described in the attached MRP.

Table 5. Recycling Discharge Specifications

Parameter	Units	Discharge Specifications[1]				
		Average Monthly	Average Weekly	Maximum Daily	Instantaneous Minimum	Instantaneous Maximum
Biochemical Oxygen Demand 5-day @ 20°C (BOD_5)	mg/L	10	15	20	--	--
Total Suspended Solids (TSS)	mg/L	10	15	20	--	--
pH	s.u.	--	--	--	6.0	9.0
Nitrate, Total (as N)	mg/L	10	--	--	--	--

Table Notes:
1. See Definitions in Attachment A and Compliance Determination discussion in section VII of this Order.

b. **Disinfection**. Disinfected tertiary treated domestic wastewater discharged at Discharge Point 002 to the water recycling system shall not contain total coliform bacteria exceeding the following concentrations, as measured at Monitoring Location REC-001:

i. The median value of total coliform bacteria measured in the disinfected effluent does not exceed an MPN of 2.2 per 100 mL utilizing the bacteriological results of the last 7 days for which analyses have been completed[1];

ii. The number of total coliform bacteria shall not exceed an MPN of 23 per 100 mL in more than one sample in any 30-day period; and

iii. No single sample shall exceed an MPN of 240 total coliform bacteria per 100 mL.

2. Water Recycling Requirements

a. The Permittee shall comply with applicable state and local requirements regarding the production and use of recycled wastewater, including requirements of Water Code sections 13500 – 13577 (Water Recycling) and State Water Resources Control Board (State Water Board), Division of Drinking Water (DDW) regulations at title 22, sections 60301 – 60357 of the CCR (Water Recycling Criteria).

b. The Permittee shall maintain an up-to-date Division of Drinking Water (DDW) approved title 22 Recycled Water Engineering Report. The Permittee shall submit to DDW and the Regional Water Board a Recycled Water Engineering Report prepared in accordance with title 22 requirements within 6 months of the permit effective date. The Permittee shall receive approval of its title 22 Engineering Report from DDW prior to adding any new recycled water user(s).

c. The Permittee shall be responsible for ensuring that recycled water meets the quality standards of this Order and for the operation and maintenance of transport facilities and associated appurtenances. The Permittee shall hold the recycled water users

[1] See section VII.I of this Order regarding compliance with the 7-day median coliform requirement.

responsible for the application and use of recycled water on their designated areas and associated operations and maintenance in accordance with all applicable title 22 requirements.

d. The Permittee shall be responsible for the operation and maintenance of transport facilities and associated appurtenances necessary to convey and distribute the recycled water from the point of production to the point of use.

e. The Permittee shall notify the Regional Water Board Executive Officer in anticipation of recycling water at a new location prior to commencement of water recycling activities at the new location. The notice shall include the following: site location, acreage involved, County Assessor Parcel number(s), name of property owner, name of use site supervisor, estimation of the anticipated volume of recycled water to be used, demonstration that recycled water will be applied at agronomic rates, a description of recycled water management facilities and BMPs that will be used to ensure compliance with the requirements of this Order, and demonstration of CEQA compliance.

f. The Permittee shall designate a Recycled Water Use Supervisor to operate and maintain the recycled water use areas. The Recycled Water Use Supervisor shall be responsible for the recycled water system. Specific responsibilities of the Recycled Water Use Supervisor, at a minimum, shall include the following:

i. Proper installation, operation, and maintenance of the irrigation system;

ii. Control of onsite piping to prevent any cross-connections with potable water supplies;

iii. Development and implementation of a set of procedures to verify on an ongoing basis that cross-connections have not occurred between potable water supplies and recycled water supplies;

iv. Routine inspection and maintenance of backflow prevention devices installed to protect potable water supplies, consistent with section 7605 of title 17 of the CCR; and

v. General responsibilities to ensure compliance with this Order and continuous implementation of any BMPs identified as necessary to prevent potential hazards to public health and to protect the environment. The Permittee shall ensure that each recycled water user properly installs, operates, and maintains the irrigation system to ensure compliance with all requirements of this Order.

g. The Permittee shall conduct periodic inspections of the irrigation system, facilities, and operations to monitor and ensure compliance with the conditions of this Order.

h. The Permittee shall report all violations of this Order in the Permittee's recycled water/irrigation monitoring reports, including incidental runoff events that the Permittee is aware of.

i. The Permittee shall ensure that each recycled water user prevents surface runoff of recycled water. The Regional Water Board recognizes that even with diligent implementation of best management practices (BMPs), incidental runoff events may occur on occasion. Incidental runoff is defined as unintended small amounts of runoff

from recycled water use areas where agronomic rates and appropriate BMPs are being implemented. Examples of incidental runoff include unintended, minimal over-spray from sprinklers that escapes the recycled water use area or accidental breakage of a sprinkler head on a properly maintained irrigation system. Water leaving an irrigation/recycled water use area is not considered incidental if it is part of the facility design, if it is due to excessive application, if it is due to intentional overflow or application, or if it is due to negligence. Incidental runoff events are typically infrequent, low volume, accidental, not due to a pattern of neglect or lack of oversight, and are promptly addressed.

All runoff incidents, including incidental runoff shall be summarized in the Permittee's recycled water monitoring reports. Enforcement action shall be considered for runoff that is not incidental but inadequate oversight or response by the Permittee, repeated runoff incidents that were within the Permittee's control, where incidental runoff causes violations of water quality objectives, incidents that create a condition of pollution or nuisance, or discharges that reach surface waters in violation of Discharge Prohibitions in section III of this Order and/or Water Recycling Requirements specified in section IV.C.4 of this Order.

j. The use of treated effluent for irrigation shall not result in unreasonable waste of water.

k. All use of treated effluent for irrigation provided pursuant to this Order shall be treated and managed in conformance with all applicable provisions of the Recycled Water Policy.

l. The discharge or use of treated effluent for irrigation shall not cause or contribute to an exceedance of any applicable water quality standard. The Permittee shall be responsible for ensuring that all recycled water meets all terms and conditions of this Order, including the quality standards in sections IV and VI of this Order.

m. The Permittee shall discontinue all delivery of treated effluent for irrigation during any period that there is reason to believe that the requirements for use as specified in this Order or the requirements of DDW or USEPA are not being met. The delivery of treated effluent for irrigation shall not resume until all conditions have been corrected.

n. Disinfected tertiary recycled water shall not be irrigated within 50 feet of any domestic water supply well or domestic water supply surface intake, unless the technical requirements specified in CCR title 22, section 60310(a) have been met and approved by DDW.

o. The use of treated effluent for irrigation shall not cause degradation of any water supply.

p. Areas irrigated with treated effluent shall be managed to prevent ponding and conditions conducive to the proliferation of mosquitoes and other disease vectors, and to avoid creation of a public nuisance or health hazard. The following practices shall be implemented, at a minimum:

i. Irrigation water shall infiltrate completely within a 48-hour period; and

ii. Low-pressure and unpressurized pipelines and ditches that may be accessible to mosquitoes shall not be used to store recycled water.

q. All areas where treated effluent is used for irrigation that are accessible to the public shall be posted with signs that are visible to the public, in a size no less than 4 inches high by 8 inches wide that include the following wording: 'RECYCLED WATER – DO NOT DRINK'. [CCR title 22, section 60310(g)] Each sign shall display an international symbol similar to that shown in CCR title 22, Figure 60310-A. These warning signs shall be posted at least every 500 feet with a minimum of a sign at each corner and access road. DDW may accept alternative signage or wording, or an educational program, provided that the Permittee demonstrates to DDW that the alternative approach will assure an equivalent degree of public notification.

r. The seasonal nutritive loading of the treated effluent used for irrigation, including the nutritive value of organic and chemical fertilizers and of the treated effluent, shall not exceed the nutritive demand of the landscape.

s. Treated effluent used for irrigation shall not be allowed to escape from the distribution system and at the recycled water use areas in the form of surface runoff. [CCR title 22, section 60310(e)] However, incidental runoff of recycled water, as defined in section IV.A.4.d, above, is not a violation of this Order. Where appropriate, practices and strategies to prevent the occurrence of runoff shall include, but not be limited to:

i. A minimum 50-foot setback to all surface waters or provide written documentation of appropriate BMPs that will be implemented to prevent or minimize the potential for runoff discharging to surface water;

ii. Implementation of an Operations and Maintenance Plan that provides for detection of leaks (for example from sprinkler heads), and correction within 72 hours of learning that runoff, or prior to release of 1,000 gallons, whichever comes first;

iii. Proper design and aim of sprinkler heads;

iv. Proper design and operation of the irrigation system;

v. Refraining from application during precipitation events;

vi. Application at an agronomic rate that does not exceed the water or nutrient demand of the crop or vegetation being irrigated;

vii. Use of repeat start times and/or multiple water days with short run times to increase irrigation efficiency and reduce runoff potential. The goal of this BMP is to apply the volume of water needed to meet the needs of the crop or vegetation being irrigated by breaking the volume up into smaller volumes. For example, apply one hour of irrigation in four 15-minute applications, separated by an hour each. This will allow more water to soak into the ground and reduce runoff;

viii. Maintenance of irrigation infrastructure (pipelines, pumps, etc.) to prevent and minimize breakage and leaks; and

ix. Adequate protection of all effluent storage reservoirs and ponds against overflow, structural damage, or a reduction in efficiency resulting from a 25-year, 24-hour

storm or flood event or greater, and notification of the Regional Water Board Executive Officer, if a discharge occurs. Use areas that are spray irrigated and allow public access shall be irrigated during periods of minimal use. Consideration shall be given to allow maximum drying time prior to subsequent public use.

t. Direct or windblown spray, mist, or runoff from irrigation areas shall not enter dwellings, designated outdoor eating areas, or food handling facilities, roadways, or any other area where the public would accidentally be exposed to recycled water. [CCR title 22, section 60310(e)(3)]

u. All irrigation equipment, pumps, piping, valves, quick couplers and outlets shall be a type or secured in a manner that only permits operation by authorized personnel and shall be appropriately marked to differentiate them from potable facilities.

v. The main shutoff valve of the irrigation system meter shall be tagged with a recycled water warning sign. The valve shall be equipped with an appropriate locking device to prevent unauthorized operation of the valve.

w. The Permittee shall implement the requirements of the California Health and Safety Code (CHSC), section 116815 regarding the installation of purple pipe. CHSC section 116815 requires that "all pipes installed above or below the ground, on or after June 1, 1993, that are designed to carry recycled water, shall be colored purple or distinctively wrapped with purple tape." Section 116815 also contains exemptions that apply to municipal facilities that have established a labeling or marking system for recycled water used on their premises and for water delivered for agricultural use. The Permittee shall document compliance with this requirement on an annual basis in its annual monitoring report. The Permittee shall continue to implement the requirements of CHSC section 116815 during the term of this Order.

x. The use of recycled water for dust suppression shall only occur during periods of dry weather, shall be limited to periods of short duration, and shall be limited to areas under the control of the Permittee.

3. Other Requirements

a. Filtration Process Requirements

i. Filtration Rate. When discharging to the recycled water system, the rate of filtration through the tertiary filters, as measured at Monitoring Location INT-001, shall not exceed five (5) gallons per minute per square foot of surface area or other filtration rates authorized in writing by the Regional Water Board Executive Officer and under conditions recommended by DDW.

ii. Turbidity. The effluent from the filtration system shall at all times be filtered such that the filtered effluent does not exceed any of the following specifications at Monitoring Location INT-002, as described in the attached MRP (Attachment E):

(a) An average of 2 Nephelometric Turbidity Units (NTU) during any 24-hour period;

(b) 5 NTU more than 5 percent of the time during any 24-hour period; and

(c) 10 NTU at any time.

b. Disinfection Process Requirements. Treated effluent shall be disinfected in a manner that ensures effective pathogen reduction as described in the following specifications, with compliance measured at Monitoring Location REC-001:

i. Before recycled water is used to irrigate the athletic fields, a CT value[2] of not less than 450 milligram-minutes per liter shall be achieved by maintaining a chlorine residual in the recycled water storage tank for a predetermined contact time. The minimum allowable contact time, between the time pumping from the Facility is stopped and the time irrigation begins, is 90 minutes.

ii. Recycled water not meeting the CT criteria shall not be discharged for irrigation at the athletic fields.

c. Storage Ponds. Ponds used for the storage of recycled water shall be constructed in a manner that protects groundwater.

V. RECEIVING WATER LIMITATIONS

A. Surface Water Limitation

Receiving water limitations are based on water quality objectives contained in the Ocean Plan, and are a required part of this Order. Receiving water conditions not in conformance with the limitation are not necessarily a violation of this Order. The Regional Water Board may require an investigation to determine cause and culpability prior to asserting that a violation has occurred.

Discharges from the Facility shall not cause the following in the receiving water upon completion of initial dilution:

1. Ocean Plan

a. Bacterial Characteristics

i. Water-Contact Standards. Within a zone bounded by the shoreline and a distance of 1,000 feet from the shoreline or the 30-foot depth contour, whichever is further from the shoreline, and in areas outside this zone designated for water contact recreation use by the Regional Water Board, but including all kelp beds, the following bacteriological objectives shall be maintained throughout the water column:

(a) 30-Day Geometric Mean – The following standards are based on the geometric mean of the five most recent samples from each receiving water monitoring location.

(1) Total coliform density shall not exceed 1,000 per 100 mL;

(2) Fecal coliform density shall not exceed 200 per 100 mL; and

(3) Enterococcus density shall not exceed 35 per 100 mL.

(b) Single Sample Maximum:

[2] The CT value is the product of total chlorine residual and modal contact time measured at the same period. The modal contact time is the amount of time that elapsed between the time that a tracer, such as salt or dye, is injected into the influent at the entrance of the chlorination chamber and the time that the highest concentration of the tracer is observed in the effluent form the chamber.

(1) Total coliform density shall not exceed 10,000 per 100 mL;

(2) Fecal coliform density shall not exceed 400 per 100 mL;

(3) Enterococcus density shall not exceed 104 per 100 mL; and

(4) Total coliform density shall not exceed 1,000 per 100 mL when the fecal coliform to total coliform ratio exceeds 0.1.

ii. Shellfish Harvesting Standards. At all areas where shellfish may be harvested for human consumption, as determined by the Regional Water Board, the following bacterial objectives shall be maintained throughout the water column:

(a) The median total coliform density shall not exceed 70 per 100 mL, and not more than 10 percent of the samples shall exceed 230 per 100 mL.

iii. Physical Characteristics

(a) Floating particulates and oil and grease shall not be visible.

(b) The discharge of waste shall not cause aesthetically undesirable discoloration of the ocean surface.

(c) Natural light shall not be significantly reduced at any point outside the initial dilution zone as the result of the discharge of waste.

(d) The rate of deposition of inert solids and the characteristics of inert solids in ocean sediments shall not be changed such that benthic communities are degraded.

iv. Chemical Characteristics

(a) The dissolved oxygen concentration shall not at any time be depressed more than 10 percent from that which occurs naturally, as the result of the discharge of oxygen demanding waste materials.

(b) The pH shall not be changed at any time more than 0.2 units from that which occurs naturally.

(c) The dissolved sulfide concentration of waters in and near sediments shall not be significantly increased above that present under natural conditions.

(d) The concentration of substances set forth in Chapter II, Table 1 of the Ocean Plan shall not be increased in marine sediments to levels which would degrade indigenous biota.

(e) The concentration of organic materials in marine sediments shall not be increased to levels that would degrade marine life.

(f) Nutrient materials shall not cause objectionable aquatic growths or degrade indigenous biota.

(g) Discharges shall not cause exceedances of water quality objectives for ocean waters of the state established in Chapter II, Table 1 of the Ocean Plan.

(h) Discharge of radioactive waste shall not degrade marine life.

v. Biological Characteristics

(a) Marine communities, including vertebrate, invertebrate and plant species, shall not be degraded.

(b) The natural taste, odor, and color of fish, shellfish, or other marine resources used for human consumption shall not be altered.

(c) The concentration of organic materials in fish, shellfish, or other marine resources used for human consumption shall not bioaccumulate to levels that are harmful to human health.

vi. General Standards

(a) The discharge shall not cause a violation of any applicable water quality standard for the receiving waters adopted by the Regional Water Board or the State Water Board as required by the CWA and regulations adopted thereunder.

(b) Waste management systems that discharge to the ocean must be designed and operated in a manner that will maintain the indigenous marine life and a healthy and diverse marine community.

(c) Waste discharged to the ocean must be essentially free of:

(1) Material that is floatable or will become floatable upon discharge.

(2) Settleable material or substances that may form sediments which will degrade benthic communities or other aquatic life.

(3) Substances which will accumulate to toxic levels in marine waters, sediments or biota.

(4) Substances that significantly decrease the natural light to benthic communities and other marine life.

(5) Materials that result in aesthetically undesirable discoloration of the ocean surface.

(d) Waste effluents shall be discharged in a manner which provides sufficient initial dilution to minimize the concentrations of substances not removed in the treatment.

(e) Location of waste discharges must be determined after a detailed assessment of the oceanographic characteristics and current patterns to assure that:

(1) Pathogenic organisms and viruses are not present in areas where shellfish are harvested for human consumption or in areas used for swimming or other body-contact sports.

(2) Natural water quality conditions are not altered in areas designated as being of special biological significance or areas that existing marine laboratories use as a source of seawater.

(3) Maximum protection is provided to the marine environment.

(4) The discharge does not adversely affect recreational beneficial uses such as surfing and beach walking.

B. Groundwater Limitations

1. The collection, treatment, storage, and use of wastewater or recycled water shall not cause a statistically significant degradation of groundwater quality unless a technical evaluation is performed that demonstrates that any degradation that could reasonably be expected to occur, after implementation of all regulatory requirements (e.g., Title 27) and reasonable best management practices, will not violate groundwater quality objectives or cause impacts to beneficial uses of groundwater.

2. The collection, treatment, storage, and use of wastewater or recycled water shall not cause alterations of groundwater that result in chemical concentrations in excess of limits specified in title 22, sections 64431 (Tables 2 and 3) and 64444, and the Basin Plan.

3. The collection, treatment, storage, and use of wastewater or recycled water shall not cause levels of radionuclides in groundwater in excess of the limits specified in title 22, division 4, chapter 15, article 5, section 64443 of the CCR.

4. The collection, treatment, storage, and use of wastewater or recycled water shall not cause groundwater to contain taste- or odor-producing substances in concentrations that cause nuisance or adversely affect beneficial uses.

5. In groundwaters used for domestic or municipal supply (MUN), the collection, treatment, storage, and disposal of treated wastewater or use of recycled water shall not cause the median of the most probable number of coliform organisms over any 7-day period to exceed 1.1 MPN/100 mL or 1 colony/100 mL.

VI. PROVISIONS

A. Standard Provisions

1. Federal Standard Provisions. The Permittee shall comply with all Standard Provisions included in Attachment D of this Order.

2. Regional Water Board Standard Provisions. The Permittee shall comply with the following Regional Water Board standard provisions. In the event that there is any conflict, duplication, or overlap between provisions specified by this Order, the more stringent provision shall apply:

a. Failure to comply with provisions or requirements of this Order, or violation of other applicable laws or regulations governing discharges from this facility, may subject the Permittee to administrative or civil liabilities, criminal penalties, and/or other enforcement remedies to ensure compliance. Additionally, certain violations may subject the Permittee to civil or criminal enforcement from appropriate local, state, or federal law enforcement entities.

b. In the event the Permittee does not comply or will be unable to comply for any reason, with any prohibition, final effluent limitation, recycling specification, other specification, receiving water limitation, or provision of this Order that may result in a significant threat to human health or the environment, such as inundation of treatment components, breach of pond containment, recycled water main break or equivalent

release, irrigation runoff, etc., that results in a discharge to a drainage channel or a surface water, the Permittee shall notify Regional Water Board staff within 24 hours of having knowledge of such non-compliance. Spill notification and reporting shall be conducted in accordance with Section V.E of Attachment D and X.E of the Monitoring and Reporting Program.

B. Monitoring and Reporting Program (MRP) Requirements

The Permittee shall comply with the MRP, included as Attachment E of this Order, and future revisions thereto.

C. Special Provisions

1. Reopener Provisions

a. Standard Revisions. If applicable water quality standards are promulgated or approved pursuant to Section 303 of the CWA, or amendments thereto, the Regional Water Board may reopen this Order and make modifications in accordance with such revised standards.

b. Reasonable Potential. This Order may be reopened for modification to include an effluent limitation, if monitoring establishes that the discharge causes, or has the reasonable potential to cause or contribute to, an excursion above a water quality criterion or objective applicable to the receiving water.

c. Whole Effluent Toxicity. As a result of a Toxicity Reduction Evaluation (TRE), this Order may be reopened to include a new chronic toxicity limitation, acute toxicity limitation and/or a limitation for a specific toxicant identified in the TRE.

d. 303(d)-Listed Pollutants. If an applicable total maximum daily load (TMDL) (see Fact Sheet, section III.D) program is adopted, this Order may be reopened and effluent limitations for the pollutant(s) that are the subject of the TMDL modified or imposed to conform this Order to the TMDL requirements.

e. Salt and Nutrient Management Plans (SNMPs). The Recycled Water Policy adopted by the State Water Board on February 3, 2009, and effective May 14, 2009, recognizes the fact that some groundwater basins in the state contain salts and nutrients that exceed or threaten to exceed water quality objectives in the applicable Basin Plans, and that not all Basin Plans include adequate implementation procedures for achieving or ensuring compliance with the water quality objectives for salt or nutrients. The Recycled Water Policy finds that the appropriate way to address salt and nutrient issues is through the development of regional or subregional SNMPs rather than through imposing requirements solely on individual recycled water projects. This Order may be reopened to incorporate provisions consistent with any SNMP(s) adopted by the Regional Water Board.

f. Title 22 Engineering Report. This Order implements title 22 requirements to protect public health. If future revisions to the Permittee's title 22 engineering report require modifications to this Order to adequately implement title 22, this Order may be reopened and modified as necessary.

2. Special Studies, Technical Reports and Additional Monitoring Requirements

a. Toxicity Reduction Requirements

i. Whole Effluent Toxicity. The MRP of this Order requires routine monitoring for whole effluent toxicity of Discharge Point 001 at Monitoring Location EFF-003 as described in section V of the MRP. As established by the MRP, if a reported median monthly summary result for chronic toxicity is exceeded, the Permittee shall conduct accelerated monitoring as specified in section V of the MRP.

Chronic toxicity is expressed as a null hypothesis (H_0) and regulatory management decision (*b* value) of 0.75 for the chronic toxicity methods in the MRP. The null hypothesis for this discharge is:

H_0: Mean response (1% effluent) ≤ 0.75 mean response (control)

Results obtained from a single-concentration chronic toxicity test shall be analyzed and reported using the Test of Significant Toxicity hypothesis testing approach (EPA 833-R-10-003, 2010) in the MRP.

Results of accelerated toxicity monitoring will indicate a need to conduct a toxicity reduction evaluation (TRE) if toxicity persists; or it will indicate that a return to routine toxicity monitoring is justified because toxicity has not been identified by accelerated monitoring. TREs shall be conducted in accordance with the TRE Work Plan prepared by the Permittee pursuant to section VI.C.2.a.ii. of this Order and section V.A.9 of the MRP.

ii. Preparation of Initial Investigative TRE Work Plan. The Permittee's TRE Work Plan shall be reviewed and updated as necessary in order to remain current and applicable to the discharge and discharge facilities.

The Permittee shall notify the Regional Water Board of this review and submit any revisions of the TRE Work Plan within 90 days of the notification, to be ready to respond to toxicity events. The TRE Work Plan shall describe the steps the Permittee intends to follow if toxicity is detected, and should include at least the following items:

(a) A description of the investigation and evaluation techniques that would be used to identify potential causes and sources of toxicity, effluent variability, and treatment system efficiency.

(b) A description of the Facility's methods of maximizing in-house treatment efficiency, good housekeeping practices, and a list of all chemicals used in the operation of this Facility.

(c) If a toxicity identification evaluation (TIE) is necessary, an indication of the person who would conduct the TIEs (i.e., an in-house expert or an outside contractor).

b. Recycled Water Irrigation Operations and Management Plan. Within 180 days of the adoption date of this Order, the Permittee shall submit a Recycled Water Irrigation Operations and Management Plan to the Regional Water Board. The Plan shall include the following elements:

i. Information and calculations to demonstrate that recycled water irrigation does not exceed the hydraulic and nutrient agronomic needs of the vegetation being irrigated. The assessment of agronomic rates shall account for the following:

(a) Soil characteristics;

(b) Recycled water characteristics (nutrients, including nitrogen and phosphorus content; specific ion toxicity, including chloride, boron, sodium, bicarbonate, and other parameters);

(c) General requirements of the major plant species being irrigated (e.g., seasonal demand, climate, nutrient requirements);

(d) Climatic conditions (e.g., precipitation, evapotranspiration rate, wind); and

(e) Other supplemental nutrient additions (e.g., chemical fertilizers) generally used within the use area.

ii. Describe best management practices (BMPs) that are implemented at the recycled water use site to prevent runoff, ensure application at agronomic rates, and to address erosion control and dechlorination in the event of a break or leak in the recycled water distribution system.

iii. A copy of the Permittee's established rules and/or regulations governing the use of recycled water in accordance with the criteria established in title 22 and this Order.

3. Best Management Practices and Pollution Prevention

a. Pollutant Minimization Program (PMP)

i. The Permittee shall, as required by the Executive Officer, develop and conduct a PMP as further described below when there is evidence (e.g., sample results reported as detected, but not quantified (DNQ) when the effluent limitation is less than the method detection limit (MDL), sample results from analytical methods more sensitive than those methods required by this Order, presence of whole effluent toxicity, health advisories for fish consumption, results of benthic or aquatic organism tissue sampling) that a priority pollutant is present in the effluent above an effluent limitation and either:

(a) The concentration of the pollutant is reported as DNQ and the effluent limitation is less than the reporting level (RL); and

(b) A sample result is reported as non-detect (ND) and the effluent limitation is less than the MDL, using definitions described in Attachment A and reporting protocols described in MRP section X.B.4.

ii. The PMP shall include, but not be limited to, the following actions and submittals acceptable to the Regional Water Board:

(a) An annual review and semi-annual monitoring of potential sources of the reportable priority pollutant(s), which may include fish tissue monitoring and other bio-uptake sampling;

(b) Quarterly monitoring for the reportable priority pollutant(s) in the influent to the wastewater treatment system;

(c) Submittal of a control strategy designed to proceed toward the goal of maintaining concentrations of the reportable priority pollutant(s) in the effluent at or below the effluent limitation;

(d) Implementation of appropriate cost-effective control measures for the reportable priority pollutant(s), consistent with the control strategy; and

(e) An annual status report that shall be submitted as part of the Annual Facility Report due **March 1** to the Regional Water Board and shall include:

(1) All PMP monitoring results for the previous year;

(2) A list of potential sources of the reportable pollutant(s);

(3) A summary of all actions undertaken pursuant to the control strategy; and

(4) A description of actions to be taken in the following year.

4. Construction, Operation and Maintenance Specifications

a. This Order (Attachment D, Standard Provision I.D) requires that the Permittee at all times properly operate and maintain all facilities and systems of treatment and control (and related appurtenances) that are installed or used by the Permittee to achieve compliance with this Order. Proper operation and maintenance includes adequate laboratory quality control and appropriate quality assurance procedures.

b. The Permittee shall maintain an updated Operation and Maintenance (O&M) Manual for the operational components of the Facility. The Permittee shall update the O&M Manual, as necessary, to conform to changes in operation and maintenance of the Facility. The O&M Manual shall be readily available to operating personnel onsite and for review by state or federal inspectors. The O&M Manual shall include the following.

i. Description of the Facility's organizational structure showing the number of employees, duties and qualifications and plant attendance schedules (daily, weekends and holidays, part-time, etc.). The description should include documentation that the personnel are knowledgeable and qualified to operate the Facility so as to achieve the required level of treatment at all times.

ii. Detailed description of safe and effective operation and maintenance of treatment processes, process control instrumentation and equipment.

iii. Description of laboratory and quality assurance procedures.

iv. Process and equipment inspection and maintenance schedules.

v. Description of safeguards to assure that, should there be reduction, loss, or failure of electric power, the Permittee will be able to comply with requirements of this Order.

vi. Description of preventive (fail-safe) and contingency (response and cleanup) plans for controlling accidental discharges, and for minimizing the effect of such

events. These plans shall identify the possible sources (such as loading and storage areas, power outage, waste treatment unit failure, process equipment failure, tank and piping failure) of accidental discharges, untreated or partially treated waste bypass, and polluted drainage.

5. Special Provisions for Municipal Facilities (POTWs Only)

a. Wastewater Collection Systems

i. Statewide General WDRs for Sanitary Sewer Systems

The Permittee has coverage under, and is separately subject to, the requirements of State Water Board Order No. 2006-0003-DWQ, Statewide General WDRs for Sanitary Sewer Systems, as amended by Order No. WQ 2013-0058-EXEC. As such, the Permittee provides notification and reporting of SSOs in accordance with the requirements of Order Nos. 2006-0003-DWQ and WQ 2013-0058-EXEC and any revisions thereto for operation of its wastewater collection system.

b. Source Control and Pretreatment Provisions

i. The Permittee shall perform source control functions and provide a summary of source control activities conducted in the annual report (due March 1 to the Regional Water Board). Source control functions and requirements shall include the following:

(a) Implement the necessary legal authorities to monitor and enforce source control standards, restrict discharges of toxic materials to the collection system and inspect facilities connected to the system.

(b) If waste haulers are allowed to discharge to the Facility, establish a waste hauler permit system, to be reviewed by the Executive Officer, to regulate waste haulers discharging to the collection system or Facility.

(c) Perform public outreach to educate industrial, commercial, and residential users about the importance of preventing discharges of industrial and toxic wastes to the wastewater treatment plant, at least once per year.

(d) Perform on-going inspections and monitoring, as necessary, to ensure adequate source control.

ii. In the event that the Permittee identifies industrial wastes subject to regulation under the NPDES Pretreatment Program being discharged to the wastewater treatment plant or the Regional Water Board or its Executive Officer determines that circumstances warrant pretreatment requirements in order to prevent interference [40 C.F.R. §403.3(j)] with the wastewater treatment Facility or Pass Through [40 C.F.R. §403.3(n)], then:

(a) The Permittee shall notify the Regional Water Board within 30 days after there are discharges that trigger the pretreatment requirements;

(b) The Permittee shall submit a revised ROWD and the pretreatment program for the Regional Water Board's review and approval as soon as possible, but

not more than one year after the Permittee's notification to the Regional Water Board of the need for pretreatment requirements being triggered;

(c) The Permittee shall enforce the federal categorical pretreatment standards on all categorical industrial users (CIUs);

(d) The Permittee shall notify each CIU of its discharge effluent limits. The limits must be as stringent as the pretreatment standards contained in the applicable federal category (40 C.F.R. Part 400-699). The Permittee may develop more stringent, technology-based local limits if it can show cause; and

(e) The Permittee shall notify the Regional Water Board if any CIU violates its discharge effluent limits.

iii. The Regional Water Board retains the right to take legal action against an industrial user and/or the Permittee where a user fails to meet the approved applicable federal, state, or local pretreatment standards.

iv. The Regional Water Board may amend this Order, at any time, to require the Permittee to develop and implement an industrial pretreatment program pursuant to the requirements of 40 C.F.R. Part 403 if the Regional Water Board finds that the Facility receives pollutants from an IU that is subject to pretreatment standards, or if other circumstances so warrant.

c. Sludge Disposal and Handling Requirements

i. All collected sludges and other solid waste removed from liquid wastes shall be removed from screens, sumps, ponds, and tanks as needed to ensure optimal plant operation and disposed of in accordance with applicable federal and state regulations.

ii. The use and disposal of biosolids shall comply with all of the land application and disposal requirements in 40 C.F.R. Part 503, which are enforceable by the U.S. EPA, not the Regional Water Board. If during the life of this Order, the state accepts primacy for implementation of 40 C.F.R. Part 503, the Regional Water Board may also initiate enforcement where appropriate.

iii. Sludge or biosolids that are disposed of in a municipal solid waste landfill or used as daily landfill cover shall meet the applicable requirements of 40 C.F.R. Part 258. In the annual self-monitoring report, the Permittee shall report the amount of sludge placed in a landfill and the landfill(s) which received the sludge or biosolids.

iv. The Permittee shall take all reasonable steps to prevent and minimize any sludge use or disposal in violation of this Order that may adversely affect human health or the environment.

v. Solids and sludge treatment, storage, and disposal or reuse shall not create a nuisance, such as objectionable odors or flies, and shall not result in groundwater contamination.

vi. Solids and sludge treatment and storage sites shall have facilities adequate to divert surface water runoff from adjacent areas, to protect the boundaries of the site from erosion, and to prevent drainage from the treatment and storage site. Adequate protection is defined as protection from a design storm with a 100-year recurrence interval and 24-hour duration.

vii. The discharge of sewage sludge and solids shall not cause waste material to be in a position where it is, or can be, conveyed from the treatment and storage sites and deposited in the waters of the state.

viii. For the land application of biosolids as soil amendment, the Permittee shall submit a report of waste discharge or the Permittee may dispose of biosolids at another appropriately permitted facility.

ix. New sludge treatment and storage facilities must comply with the requirements of the CCR title 27 for the protection of water quality.

d. Operator Certification

Supervisors and operators of municipal wastewater treatment facilities shall possess a certificate of appropriate grade in accordance with CCR title 23, section 3680. The State Water Board may accept experience in lieu of qualification training. In lieu of a properly certified wastewater treatment facility operator, the State Water Board may approve use of a water treatment facility operator of appropriate grade certified by the DDW where water recycling is involved.

e. Adequate Capacity

If the Facility will reach capacity within 4 years, the Permittee shall notify the Regional Water Board. A copy of such notification shall be sent to appropriate local elected officials, local permitting agencies, and the press. Factors to be evaluated in assessing reserve capacity shall include, at a minimum, (1) comparison of the wet weather design flow with the highest daily flow, and (2) comparison of the average dry weather design flow with the lowest 30-day flow. The Permittee shall demonstrate that adequate steps are being taken to address the capacity problem. The Permittee shall submit a technical report to the Regional Water Board showing how flow volumes will be prevented from exceeding capacity, or how capacity will be increased, within 120 days after providing notification to the Regional Water Board, or within 120 days after receipt of Regional Water Board notification that the Facility will reach capacity within 4 years. The time for filing the required technical report may be extended by the Regional Water Board. An extension of 30 days may be granted by the Executive Officer, and longer extensions may be granted by the Regional Water Board itself. [CCR title 23, section 2232].

6. Other Special Provisions

a. Storm Water

For the control of storm water discharges from the Facility, if required, the Permittee shall seek separate authorization to discharge under the requirements of the State Water Board's Water Quality Order No. 2014-0057-DWQ, NPDES General Permit No. CAS000001, General Permit for Storm Water Discharges Associated with Industrial Activities, which is not incorporated by reference in this Order.

BMPs to control the run-on of storm water to the Facility site shall be maintained and upgraded as necessary. The Permittee shall describe the effectiveness of these storm water BMPs, as well as activities to maintain and upgrade these BMPs during the previous year, in its annual report to the Regional Water Board.

7. Compliance Schedules – Not Applicable

VII. COMPLIANCE DETERMINATION

Compliance with the effluent limitations contained in section IV of this Order will be determined as specified below.

A. Compliance with Single-Constituent Effluent Limitations

The Permittee is out of compliance with the effluent limitation if the concentration of the pollutant (see section VII.C) in the monitoring sample is greater than the effluent limitation and greater than or equal to the reported Minimum Level (ML).

B. Compliance with Effluent Limitations Expressed as a Sum of Several Constituents

The Permittee is out of compliance with an effluent limitation which applies to the sum of a group of chemicals (e.g., PCB's) if the sum of the individual pollutant concentrations is greater than the effluent limitation. Individual pollutants of the group will be considered to have a concentration of zero if the constituent is reported as non-detect (ND) or detected but not quantified (DNQ).

C. Multiple Sample Data Reduction

The concentration of the pollutant in the effluent may be estimated from the result of a single sample analysis or by a measure of central tendency (arithmetic mean, geometric mean, median, etc.) of multiple sample analyses when all sample results are quantifiable (i.e., greater than or equal to the reported ML). When one or more sample results are reported as ND or DNQ, the central tendency concentration of the pollutant shall be the median (middle) value of the multiple samples. If, in an even number of samples, one or both of the middle values is ND or DNQ, the median will be the lower of the two middle values.

D. Average Monthly Effluent Limitation (AMEL)

If the average (or when applicable, the median determined by subsection C above for multiple sample data) of daily discharges over a calendar month exceeds the AMEL for a given parameter, this will represent a single violation, though the Permittee will be considered out of compliance for each day of that month for that parameter (e.g., resulting in 31 days of non-compliance in a 31-day month). If only a single sample is taken during the calendar month and the analytical result for that sample exceeds the AMEL, the Permittee will be considered out of compliance for that calendar month. The Permittee will only be considered out of compliance for days when the discharge occurs.

E. Average Weekly Effluent Limitation (AWEL)

If the average (or when applicable, the median determined by subsection C above for multiple sample data) of daily discharges over a calendar week exceeds the AWEL for a given parameter, this will represent a single violation, though the Permittee will be considered out of compliance for each day of that week for that parameter, resulting in 7 days of non-compliance. If only a single sample is taken during the calendar week and the analytical result for that sample exceeds

the AWEL, the Permittee will be considered out of compliance for that calendar week. The Permittee will only be considered out of compliance for days when the discharge occurs.

F. Maximum Daily Effluent Limitation (MDEL)

If a daily discharge (or when applicable, the median determined by subsection C, above, for multiple sample data of a daily discharge) exceeds the MDEL for a given parameter, the Permittee will be considered out of compliance for that parameter for that 1 day only within the reporting period.

G. Instantaneous Minimum Effluent Limitation

If the analytical result of a single grab sample is lower than the instantaneous minimum effluent limitation for a parameter, the Permittee will be considered out of compliance for that parameter for that single sample. Non-compliance for each sample will be considered separately (e.g., the results of two grab samples taken within a calendar day that both are lower than the instantaneous minimum effluent limitation would result in two instances of non-compliance with the instantaneous minimum effluent limitation).

If the Permittee monitors pH continuously, pursuant to 40 C.F.R. section 401.17, the Permittee shall be in compliance with the pH limitation specified herein provided that both of the following conditions are satisfied: (1) the total time during which the pH values are outside the required range of pH values shall not exceed 7 hours and 26 minutes in any calendar month; and (2) no individual excursion from the range of pH values shall exceed 60 minutes.

H. Instantaneous Maximum Effluent Limitation

If the analytical result of a single grab sample is higher than the instantaneous maximum effluent limitation for a parameter, the Permittee will be considered out of compliance for that parameter for that single sample. Non-compliance for each sample will be considered separately (e.g., the results of two grab samples taken within a calendar day that both exceed the instantaneous maximum effluent limitation would result in two instances of non-compliance with the instantaneous maximum effluent limitation).

If the Permittee monitors pH continuously, pursuant to 40 C.F.R. section 401.17, the Permittee shall be in compliance with the pH limitation specified herein provided that both of the following conditions are satisfied: (1) the total time during which the pH values are outside the required range of pH values shall not exceed 7 hours and 26 minutes in any calendar month; and (2) no individual excursion from the range of pH values shall exceed 60 minutes.

I. Bacteriological Limitations (Total Coliform)

1. **Median.** The median is the central tendency concentration of the pollutant. The data set shall be ranked from low to high, ranking the ND concentrations lowest, followed by quantified values. The median value is determined based on the number of data points in the set. If the data set has an odd number of data points, then the median is the middle value. If the data set has an even number of data points, the median is the average of the two middle values, unless one or both points are ND or DNQ, in which case the median value shall be the lower of the two middle data points. DNQ is lower than a detected value, and ND is lower than DNQ.

2. Due to the batch nature of the recycled water use, compliance with the 7-day median will be based on the last seven times recycled water was pumped to the recycled water irrigation tank and determined as a rolling median of the most recent seven samples. If the water pumped from the treatment plant does not meet this standard, it cannot be used for irrigation of the athletic fields. The Permittee's standard operating procedure when the coliform standard is not met is to dose the recycled water storage tank with chlorine, allow it to sit overnight, and to sample for compliance the next day.

J. Average Dry Weather Flow

Compliance with the average dry weather flow prohibition in section III.I of this Order will be determined once each calendar year by evaluating all flow data collected in a calendar year. The flow through the Facility, measured daily and averaged monthly, must be 0.3 mgd or less for the month with the lowest average monthly flow.

K. Peak Daily Wet Weather Flow

The peak daily wet weather flow is the maximum flow rate that occurs over a 24-hour period. Compliance with the peak daily wet weather flow prohibition in section III.I of this Order will be determined daily by measuring the daily average flow at Monitoring Point INF-001. If the measured daily average flow exceeds 1.0 mgd, the discharge is not in compliance with Prohibition III.I of this Order.

L. Chronic Toxicity

The discharge is subject to determination of "Pass" or "Fail" and "Percent Effect" from a single-effluent concentration chronic toxicity test at the discharge Instream Waste Concentration (IWC) using the Test of Significant Toxicity (TST) approach described in National Pollutant Discharge Elimination System Test of Significant Toxicity Implementation Document (EPA 833-R-10-003, 2010), Appendix A, Figure A-1, and Table A-1. The null hypothesis (Ho) for the TST approach is: Mean discharge IWC response ≤0.75 × Mean control response. A test result that rejects this null hypothesis is reported as "Pass". A test result that does not reject this null hypothesis is reported as "Fail". The relative "Percent Effect" at the discharge IWC is defined and reported as ((Mean control response - Mean discharge IWC response) ÷ Mean control response)) × 100.

The Maximum Daily Effluent Limitation (MDEL) for chronic toxicity is exceeded and a violation will be flagged when a chronic toxicity test, analyzed using the TST approach, results in "Fail" and the "Percent Effect" is ≥0.50.

The Median Monthly Effluent Limitation (MMEL) for chronic toxicity is exceeded and a violation will be flagged when the median of no more than three independent chronic toxicity tests, conducted within the same calendar month and analyzed using the TST approach, results in "Fail".

ATTACHMENT A – DEFINITIONS

Areas of Special Biological Significance (ASBS)
Those areas designated by the State Water Resources Control Board (State Water Board) as ocean areas requiring protection of species or biological communities to the extent that alteration of natural water quality is undesirable. All Areas of Special Biological Significance are also classified as a subset of STATE WATER QUALITY PROTECTION AREAS.

Arithmetic Mean (μ)
Also called the average is the sum of measured values divided by the number of samples. For ambient water concentrations, the arithmetic mean is calculated as follows:

Arithmetic mean = $\mu = \Sigma x / n$ where: Σx is the sum of the measured ambient water concentrations, and n is the number of samples.

Average Monthly Effluent Limitation (AMEL)
The highest allowable average of daily discharges over a calendar month, calculated as the sum of all daily discharges measured during a calendar month divided by the number of daily discharges measured during that month.

Average Weekly Effluent Limitation (AWEL)
The highest allowable average of daily discharges over a calendar week (Sunday through Saturday), calculated as the sum of all daily discharges measured during a calendar week divided by the number of daily discharges measured during that week.

Bioaccumulative Pollutants
Substances taken up by an organism from its surrounding medium through gill membranes, epithelial tissue, or from food and subsequently concentrated and retained in the body of the organism.

Carcinogenic Pollutants
Substances that are known to cause cancer in living organisms.

Chlordane
Shall mean the sum of chlordane-alpha, chlordane-gamma, chlordene-alpha, chlordene-gamma, nonachlor-alpha, nonachlor-gamma, and oxychlordane.

Coefficient of Variation (CV)
A measure of the data variability and is calculated as the estimated standard deviation divided by the arithmetic mean of the observed values.

Daily Discharge
Daily Discharge is defined as either: (1) the total mass of the constituent discharged over the calendar day (12:00 am through 11:59 pm) or any 24-hour period that reasonably represents a calendar day for purposes of sampling (as specified in the permit), for a constituent with limitations expressed in units of

mass or; (2) the unweighted arithmetic mean measurement of the constituent over the day for a constituent with limitations expressed in other units of measurement (e.g., concentration).

The daily discharge may be determined by the analytical results of a composite sample taken over the course of one day (a calendar day or other 24-hour period defined as a day) or by the arithmetic mean of analytical results from one or more grab samples taken over the course of the day.

For composite sampling, if 1 day is defined as a 24-hour period other than a calendar day, the analytical result for the 24-hour period will be considered as the result for the calendar day in which the 24-hour period ends.

DDT
Shall mean the sum of 4,4'DDT, 2,4'DDT, 4,4'DDE, 2,4'DDE, 4,4'DDD, and 2,4'DDD.

Degrade
Degradation shall be determined by comparison of the waste field and reference site(s) for characteristic species diversity, population density, contamination, growth anomalies, debility, or supplanting of normal species by undesirable plant and animal species. Degradation occurs if there are significant differences in any of three major biotic groups, namely, demersal fish, benthic invertebrates, or attached algae. Other groups may be evaluated where benthic species are not affected, or are not the only ones affected.

Detected, but Not Quantified (DNQ)
Sample results that are less than the reported Minimum Level, but greater than or equal to the laboratory's MDL. Sample results reported as DNQ are estimated concentrations.

Dichlorobenzenes
Shall mean the sum of 1,2- and 1,3-dichlorobenzene.

Dilution Credit
The amount of dilution granted to a discharge in the calculation of a water quality-based effluent limitation, based on the allowance of a specified mixing zone. It is calculated from the dilution ratio or determined through conducting a mixing zone study or modeling of the discharge and receiving water.

Downstream Ocean Waters
Waters downstream with respect to ocean currents.

Dredged Material
Any material excavated or dredged from the navigable waters of the United States, including material otherwise referred to as "spoil."

Effective Concentration (EC)
A point estimate of the toxicant concentration that would cause an adverse effect on a quantal, "all or nothing," response (such as death, immobilization, or serious incapacitation) in a given percent of the test organisms. If the effect is death or immobility, the term lethal concentration (LC) may be used. EC values may be calculated using point estimation techniques such as probit, logit, and Spearman-Karber. EC25 is the concentration of toxicant (in percent effluent) that causes a response in 25 percent of the test organisms.

Effluent Concentration Allowance (ECA)
a value derived from the water quality criterion/objective, dilution credit, and ambient background concentration that is used, in conjunction with the coefficient of variation for the effluent monitoring data, to calculate a long-term average (LTA) discharge concentration. The ECA has the same meaning as waste load allocation (WLA) as used in U.S. EPA guidance (Technical Support Document For Water Quality-based Toxics Control, March 1991, second printing, EPA/505/2-90-001).

Enclosed Bays
Indentations along the coast that enclose an area of oceanic water within distinct headlands or harbor works. Enclosed bays include all bays where the narrowest distance between headlands or outermost harbor works is less than 75 percent of the greatest dimension of the enclosed portion of the bay. This definition includes but is not limited to: Humboldt Bay, Bodega Harbor, Tomales Bay, Drakes Estero, San Francisco Bay, Morro Bay, Los Angeles Harbor, Upper and Lower Newport Bay, Mission Bay, and San Diego Bay.

Endosulfan
The sum of endosulfan-alpha and -beta and endosulfan sulfate.

Estimated Chemical Concentrations
The estimated chemical concentration that results from the confirmed detection of the substance by the analytical method below the ML value.

Estuaries and Coastal Lagoons are waters at the mouths of streams that serve as mixing zones for fresh and ocean waters during a major portion of the year. Mouths of streams that are temporarily separated from the ocean by sandbars shall be considered as estuaries. Estuarine waters will generally be considered to extend from a bay or the open ocean to the upstream limit of tidal action but may be considered to extend seaward if significant mixing of fresh and salt water occurs in the open coastal waters. The waters described by this definition include but are not limited to the Sacramento-San Joaquin Delta as defined by Section 12220 of the California Water Code, Suisun Bay, Carquinez Strait downstream to Carquinez Bridge, and appropriate areas of the Smith, Klamath, Mad, Eel, Noyo, Russian, San Diego, and Otay Rivers. Estuaries do not include inland surface waters or ocean waters.

Halomethanes shall mean the sum of bromoform, bromomethane (methyl bromide) and chloromethane (methyl chloride).

HCH shall mean the sum of the alpha, beta, gamma (lindane) and delta isomers of hexachlorocyclohexane.

Inhibition Concentration
The IC25 is typically calculated as a percentage of effluent. It is the level at which the organisms exhibit 25 percent reduction in biological measurement such as reproduction or growth. It is calculated statistically and used in chronic toxicity testing.

Initial Dilution
The process that results in the rapid and irreversible turbulent mixing of wastewater with ocean water around the point of discharge.

For a submerged buoyant discharge, characteristic of most municipal and industrial wastes that are released from the submarine outfalls, the momentum of the discharge and its initial buoyancy act together to produce turbulent mixing. Initial dilution in this case is completed when the diluting wastewater ceases to rise in the water column and first begins to spread horizontally.

For shallow water submerged discharges, surface discharges, and non-buoyant discharges, characteristic of cooling water wastes and some individual discharges, turbulent mixing results primarily from the momentum of discharge. Initial dilution, in these cases, is considered to be completed when the momentum induced velocity of the discharge ceases to produce significant mixing of the waste, or the diluting plume reaches a fixed distance from the discharge to be specified by the Regional Water Board, whichever results in the lower estimate for initial dilution.

Inland Surface Waters
All surface waters of the state that do not include the ocean, enclosed bays, or estuaries.

Instantaneous Maximum Effluent Limitation
The highest allowable value for any single grab sample or aliquot (i.e., each grab sample or aliquot is independently compared to the instantaneous maximum limitation).

Instantaneous Minimum Effluent Limitation
The lowest allowable value for any single grab sample or aliquot (i.e., each grab sample or aliquot is independently compared to the instantaneous minimum limitation).

Kelp Beds
For purposes of the bacteriological standards of the Ocean Plan, are significant aggregations of marine algae of the genera Macrocystis and Nereocystis. Kelp beds include the total foliage canopy of Macrocystis and Nereocystis plants throughout the water column.

Lowest Observed Effect Concentration (LOEC)
The lowest concentration of an effluent or toxicant that results in adverse effects on the test organism (i.e., where the values for the observed endpoints are statistically different from the control).

Mariculture
The culture of plants and animals in marine waters independent of any pollution source.

Material
(a) In common usage: (1) the substance or substances of which a thing is made or composed (2) substantial; (b) For purposes of the Ocean Plan relating to waste disposal, dredging and the disposal of dredged material and fill, MATERIAL means matter of any kind or description which is subject to regulation as waste, or any material dredged from the navigable waters of the United States. See also, DREDGED MATERIAL.

Maximum Daily Effluent Limitation (MDEL)
The highest allowable daily discharge of a pollutant, over a calendar day (or 24-hour period). For pollutants with limitations expressed in units of mass, the daily discharge is calculated as the total mass of the pollutant discharged over the day. For pollutants with limitations expressed in other units of measurement, the daily discharge is calculated as the arithmetic mean measurement of the pollutant over the day.

Median
The middle measurement in a set of data. The median of a set of data is found by first arranging the measurements in order of magnitude (either increasing or decreasing order). If the number of measurements (n) is odd, then the median = $X_{(n+1)/2}$. If n is even, then the median = $(X_{n/2} + X_{(n/2)+1})/2$ (i.e., the midpoint between the $n/2$ and $n/2+1$).

Method Detection Limit (MDL)
The minimum concentration of a substance that can be measured and reported with 99 percent confidence that the analyte concentration is greater than zero, as defined in 40 C.F.R. part 136, Attachment B, revised as of July 3, 1999.

Minimum Level (ML)
The concentration at which the entire analytical system must give a recognizable signal and acceptable calibration point. The ML is the concentration in a sample that is equivalent to the concentration of the lowest calibration standard analyzed by a specific analytical procedure, assuming that all the method specified sample weights, volumes, and processing steps have been followed.

Mixing Zone
A limited volume of receiving water that is allocated for mixing with a wastewater discharge where water quality criteria can be exceeded without causing adverse effects to the overall water body.

Natural Light
Reduction of natural light may be determined by the Regional Water Board by measurement of light transmissivity or total irradiance, or both, according to the monitoring needs of the Regional Water Board.

No Observed Effect Concentration (NOEC)
The highest tested concentration of an effluent or a test sample at which the effect is no different from the control effect, according to the statistical test used (see LOEC). The NOEC is usually the highest tested concentration of an effluent or toxicant that causes no observable effects on the aquatic test organisms (i.e., the highest concentration of toxicity at which the values for the observed responses do not statistically differ from the controls). It is determined using hypothesis testing.

Not Detected (ND)
Those sample results less than the laboratory's MDL.

Ocean Waters
The territorial marine waters of the state as defined by California law to the extent these waters are outside of enclosed bays, estuaries, and coastal lagoons. If a discharge outside the territorial waters of the state could affect the quality of the waters of the state, the discharge may be regulated to assure no violation of the Ocean Plan will occur in ocean waters.

PAHs (polynuclear aromatic hydrocarbons)
The sum of acenaphthylene, anthracene, 1,2-benzanthracene, 3,4-benzofluoranthene, benzo[k]fluoranthene, 1,12-benzoperylene, benzo[a]pyrene, chrysene, dibenzo[ah]anthracene, fluorene, indeno[1,2,3-cd]pyrene, phenanthrene and pyrene.

PCBs (polychlorinated biphenyls)
The sum of chlorinated biphenyls whose analytical characteristics resemble those of Aroclor-1016, Aroclor-1221, Aroclor-1232, Aroclor-1242, Aroclor-1248, Aroclor-1254 and Aroclor-1260.

Persistent Pollutants
Substances for which degradation or decomposition in the environment is nonexistent or very slow.

Pollutant Minimization Program (PMP)
PMP means waste minimization and pollution prevention actions that include, but are not limited to, product substitution, waste stream recycling, alternative waste management methods, and education of the public and businesses. The goal of the PMP shall be to reduce all potential sources of Ocean Plan Table 1 pollutants through pollutant minimization (control) strategies, including pollution prevention measures as appropriate, to maintain the effluent concentration at or below the water quality-based effluent limitation. Pollution prevention measures may be particularly appropriate for persistent bioaccumulative priority pollutants where there is evidence that beneficial uses are being impacted. The Regional Water Board may consider cost effectiveness when establishing the requirements of a PMP. The completion and implementation of a Pollution Prevention Plan, if required pursuant to Water Code section 13263.3(d), shall be considered to fulfill the PMP requirements.

Pollution Prevention
Any action that causes a net reduction in the use or generation of a hazardous substance or other pollutant that is discharged into water and includes, but is not limited to, input change, operational improvement, production process change, and product reformulation (as defined in Water Code section 13263.3). Pollution prevention does not include actions that merely shift a pollutant in wastewater from one environmental medium to another environmental medium, unless clear environmental benefits of such an approach are identified to the satisfaction of the State or Regional Water Board.

Publicly Owned Treatment Works (POTW)
A treatment works as defined in section 212 of the Clean Water Act (CWA), which is owned by a government agency as defined by section 502(4) of the CWA. [Section 502(4) of the CWA defines a municipality as a city, town, borough, county, parish, district, association, or other public body created by or pursuant to State law and having jurisdiction over disposal of sewage, industrial wastes, or other wastes). This definition includes any devices and systems used in the storage, treatment, recycling, and recycling of municipal sewage or industrial wastes of a liquid nature. It also includes sewers, pipes and other conveyances only if they convey wastewater to a POTW Treatment Plant. The term also means the municipality as defined in section 502(4) of the CWA, which has jurisdiction over the Indirect Discharges to and the discharges from such a treatment works.

Recycled Water
Water which, as a result of treatment of municipal wastewater, is suitable for a direct beneficial use or a controlled use that would not otherwise occur and is therefore considered a valuable resource (Water Code section 13050). The terms “recycled water” and “reclaimed water” have the same meaning (Water Code section 26).

Reporting Level (RL)
The ML (and its associated analytical method) used for reporting and compliance determination. The MLs included in this Order correspond to approved analytical methods for reporting a sample result that are

selected by the Regional Water Board either from Appendix II of the Ocean Plan in accordance with section III.C.5.a. of the Ocean Plan or established in accordance with section III.C.5.b. of the Ocean Plan. The ML is based on the proper application of method-based analytical procedures for sample preparation and the absence of any matrix interferences. Other factors may be applied to the ML depending on the specific sample preparation steps employed. For example, the treatment typically applied in cases where there are matrix-effects is to dilute the sample or sample aliquot by a factor of ten. In such cases, this additional factor must be applied to the ML in the computation of the RL.

Satellite Collection System
The portion, if any, of a sanitary sewer system owned or operated by a different public agency than the agency that owns and operates the wastewater treatment facility that a sanitary sewer system is tributary to.

Shellfish
Organisms identified by the California Department of Health Services as shellfish for public health purposes (i.e., mussels, clams and oysters).

Significant Difference
Defined as a statistically significant difference in the means of two distributions of sampling results at the 95 percent confidence level.

Six-Month Median Effluent Limitation
The highest allowable moving median of all daily discharges for any 180-day period.

Sludge and Biosolids
Sludge, as used in this Order, means the solid, semisolid, and liquid residues removed during primary, secondary, or advanced wastewater treatment processes. Solid waste refers to grit and screenings generated during preliminary treatment. Biosolids refers to sludge that has been treated, tested, and demonstrated to be capable of being beneficially and legally used pursuant to federal and state regulations as a soil amendment for agriculture, silviculture, horticulture, and land reclamation activities.

Source of Drinking Water
Any water designated as municipal or domestic supply (MUN) in a Regional Water Board Basin Plan.

Standard Deviation (σ)
A measure of variability that is calculated as follows:

$$\sigma = (\sum[(x - \mu)^2]/(n - 1))^{0.5}$$

where:

x is the observed value;

μ is the arithmetic mean of the observed values; and

n is the number of samples.

State Water Quality Protection Areas (SWQPAs)
Non-terrestrial marine or estuarine areas designated to protect marine species or biological communities from an undesirable alteration in natural water quality. All AREAS OF SPECIAL BIOLOGICAL SIGNIFICANCE (ASBS) that were previously designated by the State Water Board in Resolution Nos. 74-28, 74-32, and 75-61 are now also classified as a subset of State Water Quality Protection Areas and require special protections afforded by the Ocean Plan.

TCDD Equivalents
The sum of the concentrations of chlorinated dibenzodioxins (2,3,7,8-CDDs) and chlorinated dibenzofurans (2,3,7,8-CDFs) multiplied by their respective toxicity factors, as shown in the table below.

Isomer Group	Toxicity Equivalence Factor
2,3,7,8-tetra CDD	1.0
2,3,7,8-penta CDD	0.5
2,3,7,8-hexa CDDs	0.1
2,3,7,8-hepta CDD	0.01
octa CDD	0.001
2,3,7,8 tetra CDF	0.1
1,2,3,7,8 penta CDF	0.05
2,3,4,7,8 penta CDF	0.5
2,3,7,8 hexa CDFs	0.1
2,3,7,8 hepta CDFs	0.01
octa CDF	0.001

Test of Significant Toxicity (TST)
The statistical approach described in National Pollutant Discharge Elimination System Test of Significant Toxicity Implementation Document (EPA 833-R10-003, 2010). TST was developed by the U.S. Environmental Protection Agency (EPA) for analyzing WET and ambient toxicity data. Using the TST approach, the sample is declared toxic if there is greater than or equal to a 25% effect in chronic tests, or if there is greater than or equal to a 20% effect in acute tests at the permitted instream waste concentration (IWC) (referred to as the toxic regulatory management decision (RMD)). The sample is declared non-toxic if there is less than or equal to a 10% effect at the IWC in acute or chronic tests (referred to as the non-toxic RMD).

Toxicity Reduction Evaluation (TRE)
A study conducted in a step-wise process designed to identify the causative agents of effluent or ambient toxicity, isolate the sources of toxicity, evaluate the effectiveness of toxicity control options, and then confirm the reduction in toxicity. The first steps of the TRE consist of the collection of data relevant to the toxicity, including additional toxicity testing, and an evaluation of facility operations and maintenance practices, and best management practices. A Toxicity Identification Evaluation (TIE) may be required as part of the TRE, if appropriate. (A TIE is a set of procedures to identify the specific chemical(s) responsible for toxicity. These procedures are performed in three phases (characterization, identification, and confirmation) using aquatic organism toxicity tests.)

Waste
As used in the Ocean Plan, waste includes a discharger's total discharge, of whatever origin, i.e., gross, not net, discharge.

Water Recycling
The treatment of wastewater to render it suitable for reuse, the transportation of treated wastewater to the place of use, and the actual use of treated wastewater for a direct beneficial use or controlled use that would not otherwise occur.

ATTACHMENT B – MAP

ATTACHMENT C – FLOW SCHEMATIC

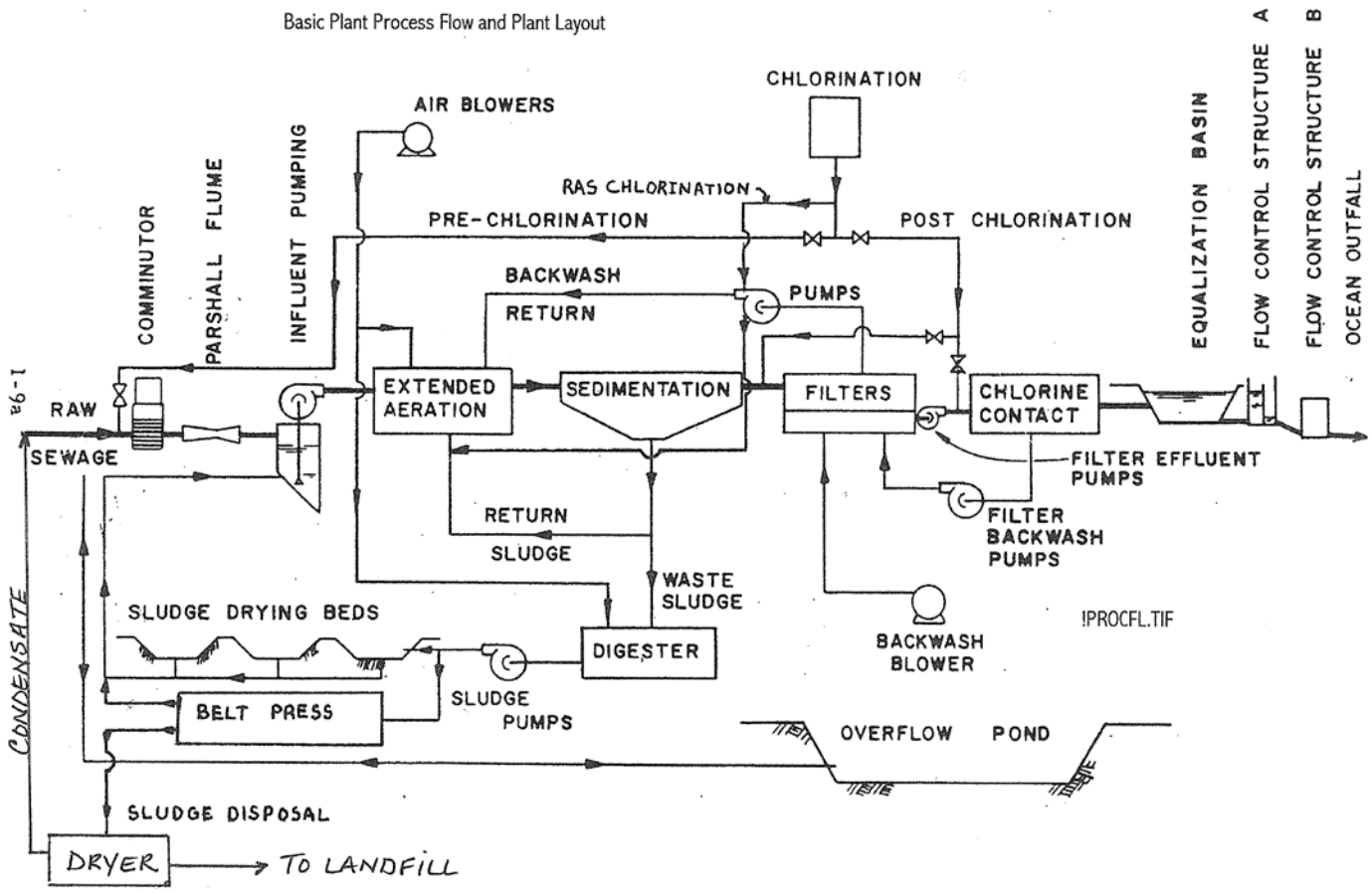

ATTACHMENT D – STANDARD PROVISIONS

I. STANDARD PROVISIONS – PERMIT COMPLIANCE

A. Duty to Comply

1. The Permittee must comply with all of the conditions of this Order. Any noncompliance constitutes a violation of the Clean Water Act (CWA) and the California Water Code and is grounds for enforcement action, for permit termination, revocation and reissuance, or modification; or denial of a permit renewal application. (40 C.F.R. § 122.41(a).)

2. The Permittee shall comply with effluent standards or prohibitions established under Section 307(a) of the CWA for toxic pollutants and with standards for sewage sludge use or disposal established under Section 405(d) of the CWA within the time provided in the regulations that establish these standards or prohibitions, even if this Order has not yet been modified to incorporate the requirement. (40 C.F.R. § 122.41(a)(1).)

B. Need to Halt or Reduce Activity Not a Defense

It shall not be a defense for a Permittee in an enforcement action that it would have been necessary to halt or reduce the permitted activity in order to maintain compliance with the conditions of this Order. (40 C.F.R. § 122.41(c).)

C. Duty to Mitigate

The Permittee shall take all reasonable steps to minimize or prevent any discharge or sludge use or disposal in violation of this Order that has a reasonable likelihood of adversely affecting human health or the environment. (40 C.F.R. § 122.41(d).)

D. Proper Operation and Maintenance

The Permittee shall at all times properly operate and maintain all facilities and systems of treatment and control (and related appurtenances) which are installed or used by the Permittee to achieve compliance with the conditions of this Order. Proper operation and maintenance also includes adequate laboratory controls and appropriate quality assurance procedures. This provision requires the operation of backup or auxiliary facilities or similar systems that are installed by a Permittee only when necessary to achieve compliance with the conditions of this Order. (40 C.F.R. § 122.41(e).)

E. Property Rights

1. This Order does not convey any property rights of any sort or any exclusive privileges. (40 C.F.R. § 122.41(g).)

2. The issuance of this Order does not authorize any injury to persons or property or invasion of other private rights, or any infringement of state or local law or regulations. (40 C.F.R. § 122.5(c).)

F. Inspection and Entry

The Permittee shall allow the Regional Water Board, State Water Board, U.S. EPA, and/or their authorized representatives (including an authorized contractor acting as their representative),

upon the presentation of credentials and other documents, as may be required by law, to (40 C.F.R. § 122.41(i); Wat. Code, § 13383):

1. Enter upon the Permittee's premises where a regulated facility or activity is located or conducted, or where records are kept under the conditions of this Order (40 C.F.R. § 122.41(i)(1));

2. Have access to and copy, at reasonable times, any records that must be kept under the conditions of this Order (40 C.F.R. § 122.41(i)(2));

3. Inspect and photograph, at reasonable times, any facilities, equipment (including monitoring and control equipment), practices, or operations regulated or required under this Order (40 C.F.R. § 122.41(i)(3)); and

4. Sample or monitor, at reasonable times, for the purposes of assuring Order compliance or as otherwise authorized by the CWA or the Water Code, any substances or parameters at any location. (40 C.F.R. § 122.41(i)(4).)

G. Bypass

1. Definitions

a. "Bypass" means the intentional diversion of waste streams from any portion of a treatment facility. (40 C.F.R. § 122.41(m)(1)(i).)

b. "Severe property damage" means substantial physical damage to property, damage to the treatment facilities, which causes them to become inoperable, or substantial and permanent loss of natural resources that can reasonably be expected to occur in the absence of a bypass. Severe property damage does not mean economic loss caused by delays in production. (40 C.F.R. § 122.41(m)(1)(ii).)

2. Bypass not exceeding limitations. The Permittee may allow any bypass to occur which does not cause exceedances of effluent limitations, but only if it is for essential maintenance to assure efficient operation. These bypasses are not subject to the provisions listed in Standard Provisions – Permit Compliance I.G.3, I.G.4, and I.G.5 below. (40 C.F.R. § 122.41(m)(2).)

3. Prohibition of bypass. Bypass is prohibited, and the Regional Water Board may take enforcement action against a Permittee for bypass, unless (40 C.F.R. § 122.41(m)(4)(i)):

a. Bypass was unavoidable to prevent loss of life, personal injury, or severe property damage (40 C.F.R. § 122.41(m)(4)(i)(A));

b. There were no feasible alternatives to the bypass, such as the use of auxiliary treatment facilities, retention of untreated wastes, or maintenance during normal periods of equipment downtime. This condition is not satisfied if adequate back-up equipment should have been installed in the exercise of reasonable engineering judgment to prevent a bypass that occurred during normal periods of equipment downtime or preventive maintenance (40 C.F.R. § 122.41(m)(4)(i)(B)); and

c. The Permittee submitted notice to the Regional Water Board as required under Standard Provisions – Permit Compliance I.G.5 below. (40 C.F.R. § 122.41(m)(4)(i)(C).)

4. The Regional Water Board may approve an anticipated bypass, after considering its adverse effects, if the Regional Water Board determines that it will meet the three conditions listed in Standard Provisions – Permit Compliance I.G.3 above. (40 C.F.R. § 122.41(m)(4)(ii).)

5. Notice

a. Anticipated bypass. If the Permittee knows in advance of the need for a bypass, it shall submit a notice, if possible at least 10 days before the date of the bypass. (40 C.F.R. § 122.41(m)(3)(i).)

b. Unanticipated bypass. The Permittee shall submit notice of an unanticipated bypass as required in Standard Provisions - Reporting V.E below (24-hour notice). (40 C.F.R. § 122.41(m)(3)(ii).)

H. Upset

Upset means an exceptional incident in which there is unintentional and temporary noncompliance with technology based permit effluent limitations because of factors beyond the reasonable control of the Permittee. An upset does not include noncompliance to the extent caused by operational error, improperly designed treatment facilities, inadequate treatment facilities, lack of preventive maintenance, or careless or improper operation. (40 C.F.R. § 122.41(n)(1).)

1. Effect of an upset. An upset constitutes an affirmative defense to an action brought for noncompliance with such technology based permit effluent limitations if the requirements of Standard Provisions – Permit Compliance I.H.2 below are met. No determination made during administrative review of claims that noncompliance was caused by upset, and before an action for noncompliance, is final administrative action subject to judicial review. (40 C.F.R. § 122.41(n)(2).)

2. Conditions necessary for a demonstration of upset. A Permittee who wishes to establish the affirmative defense of upset shall demonstrate, through properly signed, contemporaneous operating logs or other relevant evidence that (40 C.F.R. § 122.41(n)(3)):

a. An upset occurred and that the Permittee can identify the cause(s) of the upset (40 C.F.R. § 122.41(n)(3)(i));

b. The permitted facility was, at the time, being properly operated (40 C.F.R. § 122.41(n)(3)(ii));

c. The Permittee submitted notice of the upset as required in Standard Provisions – Reporting V.E.2.b below (24-hour notice) (40 C.F.R. § 122.41(n)(3)(iii)); and

d. The Permittee complied with any remedial measures required under Standard Provisions – Permit Compliance I.C above. (40 C.F.R. § 122.41(n)(3)(iv).)

3. Burden of proof. In any enforcement proceeding, the Permittee seeking to establish the occurrence of an upset has the burden of proof. (40 C.F.R. § 122.41(n)(4).)

II. STANDARD PROVISIONS – PERMIT ACTION

A. General

This Order may be modified, revoked and reissued, or terminated for cause. The filing of a request by the Permittee for modification, revocation and reissuance, or termination, or a notification of planned changes or anticipated noncompliance does not stay any Order condition. (40 C.F.R. § 122.41(f).)

B. Duty to Reapply

If the Permittee wishes to continue an activity regulated by this Order after the expiration date of this Order, the Permittee must apply for and obtain a new permit. (40 C.F.R. § 122.41(b).)

C. Transfers

This Order is not transferable to any person except after notice to the Regional Water Board. The Regional Water Board may require modification or revocation and reissuance of the Order to change the name of the Permittee and incorporate such other requirements as may be necessary under the CWA and the Water Code. (40 C.F.R. § 122.41(l)(3); § 122.61.)

III. STANDARD PROVISIONS – MONITORING

A. Samples and measurements taken for the purpose of monitoring shall be representative of the monitored activity. (40 C.F.R. § 122.41(j)(1).)

B. Monitoring results must be conducted according to test procedures under 40 C.F.R. part 136 or, in the case of sludge use or disposal, approved under 40 C.F.R. part 136 unless otherwise specified in 40 C.F.R. part 503 unless other test procedures have been specified in this Order. (40 C.F.R. § 122.41(j)(4); § 122.44(i)(1)(iv).)

IV. STANDARD PROVISIONS – RECORDS

A. Except for records of monitoring information required by this Order related to the Permittee's sewage sludge use and disposal activities, which shall be retained for a period of at least five years (or longer as required by 40 C.F.R. part 503), the Permittee shall retain records of all monitoring information, including all calibration and maintenance records and all original strip chart recordings for continuous monitoring instrumentation, copies of all reports required by this Order, and records of all data used to complete the application for this Order, for a period of at least three (3) years from the date of the sample, measurement, report or application. This period may be extended by request of the Regional Water Board Executive Officer at any time. (40 C.F.R. § 122.41(j)(2).)

B. Records of monitoring information shall include:

1. The date, exact place, and time of sampling or measurements (40 C.F.R. § 122.41(j)(3)(i));

2. The individual(s) who performed the sampling or measurements (40 C.F.R. § 122.41(j)(3)(ii));

3. The date(s) analyses were performed (40 C.F.R. § 122.41(j)(3)(iii));

4. The individual(s) who performed the analyses (40 C.F.R. § 122.41(j)(3)(iv));

5. The analytical techniques or methods used (40 C.F.R. § 122.41(j)(3)(v)); and

6. The results of such analyses. (40 C.F.R. § 122.41(j)(3)(vi).)

C. Claims of confidentiality for the following information will be denied (40 C.F.R. § 122.7(b)):

1. The name and address of any permit applicant or Permittee (40 C.F.R. § 122.7(b)(1)); and

2. Permit applications and attachments, permits and effluent data. (40 C.F.R. § 122.7(b)(2).)

V. STANDARD PROVISIONS – REPORTING

A. Duty to Provide Information

The Permittee shall furnish to the Regional Water Board, State Water Board, or U.S. EPA within a reasonable time, any information which the Regional Water Board, State Water Board, or U.S. EPA may request to determine whether cause exists for modifying, revoking and reissuing, or terminating this Order or to determine compliance with this Order. Upon request, the Permittee shall also furnish to the Regional Water Board, State Water Board, or U.S. EPA copies of records required to be kept by this Order. (40 C.F.R. § 122.41(h); Wat. Code, § 13267.)

B. Signatory and Certification Requirements

1. All applications, reports, or information submitted to the Regional Water Board, State Water Board, and/or U.S. EPA shall be signed and certified in accordance with Standard Provisions – Reporting V.B.2, V.B.3, V.B.4, and V.B.5 below. (40 C.F.R. § 122.41(k).)

2. All permit applications shall be signed by either a principal executive officer or ranking elected official. For purposes of this provision, a principal executive officer of a federal agency includes: (i) the chief executive officer of the agency, or (ii) a senior executive officer having responsibility for the overall operations of a principal geographic unit of the agency (e.g., Regional Administrators of U.S. EPA). (40 C.F.R. § 122.22(a)(3).).

3. All reports required by this Order and other information requested by the Regional Water Board, State Water Board, or U.S. EPA shall be signed by a person described in Standard Provisions – Reporting V.B.2 above, or by a duly authorized representative of that person. A person is a duly authorized representative only if:

a. The authorization is made in writing by a person described in Standard Provisions – Reporting V.B.2 above (40 C.F.R. § 122.22(b)(1));

b. The authorization specifies either an individual or a position having responsibility for the overall operation of the regulated facility or activity such as the position of plant manager, operator of a well or a well field, superintendent, position of equivalent responsibility, or an individual or position having overall responsibility for environmental matters for the company. (A duly authorized representative may thus be either a named individual or any individual occupying a named position.) (40 C.F.R. § 122.22(b)(2)); and

c. The written authorization is submitted to the Regional Water Board and State Water Board. (40 C.F.R. § 122.22(b)(3).)

4. If an authorization under Standard Provisions – Reporting V.B.3 above is no longer accurate because a different individual or position has responsibility for the overall operation of the facility, a new authorization satisfying the requirements of Standard Provisions – Reporting

V.B.3 above must be submitted to the Regional Water Board and State Water Board prior to or together with any reports, information, or applications, to be signed by an authorized representative. (40 C.F.R. § 122.22(c).)

5. Any person signing a document under Standard Provisions – Reporting V.B.2 or V.B.3 above shall make the following certification:

"I certify under penalty of law that this document and all attachments were prepared under my direction or supervision in accordance with a system designed to assure that qualified personnel properly gather and evaluate the information submitted. Based on my inquiry of the person or persons who manage the system or those persons directly responsible for gathering the information, the information submitted is, to the best of my knowledge and belief, true, accurate, and complete. I am aware that there are significant penalties for submitting false information, including the possibility of fine and imprisonment for knowing violations." (40 C.F.R. § 122.22(d).)

C. Monitoring Reports

1. Monitoring results shall be reported at the intervals specified in the Monitoring and Reporting Program (Attachment E) in this Order. (40 C.F.R. § 122.41(l)(4).)

2. Monitoring results must be reported on a Discharge Monitoring Report (DMR) form or forms provided or specified by the Regional Water Board or State Water Board for reporting results of monitoring of sludge use or disposal practices. (40 C.F.R. § 122.41(l)(4)(i).)

3. If the Permittee monitors any pollutant more frequently than required by this Order using test procedures approved under 40 C.F.R. part 136, or another method required for an industry-specific waste stream under 40 C.F.R. subchapters N or O, the results of such monitoring shall be included in the calculation and reporting of the data submitted in the DMR or sludge reporting form specified by the Regional Water Board. (40 C.F.R. § 122.41(l)(4)(ii).)

4. Calculations for all limitations, which require averaging of measurements, shall utilize an arithmetic mean unless otherwise specified in this Order. (40 C.F.R. § 122.41(l)(4)(iii).)

D. Compliance Schedules

Reports of compliance or noncompliance with, or any progress reports on, interim and final requirements contained in any compliance schedule of this Order, shall be submitted no later than 14 days following each schedule date. (40 C.F.R. § 122.41(l)(5).)

E. Twenty-Four Hour Reporting

1. The Permittee shall report any noncompliance that may endanger health or the environment. Any information shall be provided orally within 24 hours from the time the Permittee becomes aware of the circumstances. A written submission shall also be provided within five (5) days of the time the Permittee becomes aware of the circumstances. The written submission shall contain a description of the noncompliance and its cause; the period of noncompliance, including exact dates and times, and if the noncompliance has not been corrected, the anticipated time it is expected to continue; and steps taken or planned to reduce, eliminate, and prevent reoccurrence of the noncompliance. (40 C.F.R. § 122.41(l)(6)(i).)

2. The following shall be included as information that must be reported within 24 hours under this paragraph (40 C.F.R. § 122.41(l)(6)(ii)):

a. Any unanticipated bypass that exceeds any effluent limitation in this Order. (40 C.F.R. § 122.41(l)(6)(ii)(A).)

b. Any upset that exceeds any effluent limitation in this Order. (40 C.F.R. § 122.41(l)(6)(ii)(B).)

3. The Regional Water Board may waive the above-required written report under this provision on a case-by-case basis if an oral report has been received within 24 hours. (40 C.F.R. § 122.41(l)(6)(iii).)

F. Planned Changes

The Permittee shall give notice to the Regional Water Board as soon as possible of any planned physical alterations or additions to the permitted facility. Notice is required under this provision only when (40 C.F.R. § 122.41(l)(1)):

1. The alteration or addition to a permitted facility may meet one of the criteria for determining whether a facility is a new source in section 122.29(b) (40 C.F.R. § 122.41(l)(1)(i)); or

2. The alteration or addition could significantly change the nature or increase the quantity of pollutants discharged. This notification applies to pollutants that are not subject to effluent limitations in this Order. (40 C.F.R. § 122.41(l)(1)(ii).)

3. The alteration or addition results in a significant change in the Permittee's sludge use or disposal practices, and such alteration, addition, or change may justify the application of permit conditions that are different from or absent in the existing permit, including notification of additional use or disposal sites not reported during the permit application process or not reported pursuant to an approved land application plan. (40 C.F.R.§ 122.41(l)(1)(iii).)

G. Anticipated Noncompliance

The Permittee shall give advance notice to the Regional Water Board or State Water Board of any planned changes in the permitted facility or activity that may result in noncompliance with this Order's requirements. (40 C.F.R. § 122.41(l)(2).)

H. Other Noncompliance

The Permittee shall report all instances of noncompliance not reported under Standard Provisions – Reporting V.C, V.D, and V.E above at the time monitoring reports are submitted. The reports shall contain the information listed in Standard Provision – Reporting V.E above. (40 C.F.R. § 122.41(l)(7).)

I. Other Information

When the Permittee becomes aware that it failed to submit any relevant facts in a permit application, or submitted incorrect information in a permit application or in any report to the Regional Water Board, State Water Board, or U.S. EPA, the Permittee shall promptly submit such facts or information. (40 C.F.R. § 122.41(l)(8).)

VI. STANDARD PROVISIONS – ENFORCEMENT

The Regional Water Board is authorized to enforce the terms of this permit under several provisions of the Water Code, including, but not limited to, sections 13385, 13386, and 13387.

VII. ADDITIONAL PROVISIONS – NOTIFICATION LEVELS

A. Publicly-Owned Treatment Works (POTWs)

All POTWs shall provide adequate notice to the Regional Water Board of the following (40 C.F.R. § 122.42(b)):

1. Any new introduction of pollutants into the POTW from an indirect discharger that would be subject to sections 301 or 306 of the CWA if it were directly discharging those pollutants (40 C.F.R. § 122.42(b)(1)); and

2. Any substantial change in the volume or character of pollutants being introduced into that POTW by a source introducing pollutants into the POTW at the time of adoption of this Order (40 C.F.R. § 122.42(b)(2)).

3. Adequate notice shall include information on the quality and quantity of effluent introduced into the POTW as well as any anticipated impact of the change on the quantity or quality of effluent to be discharged from the POTW. (40 C.F.R. § 122.42(b)(3))

ATTACHMENT E – MONITORING AND REPORTING PROGRAM

Contents

I. General Monitoring Provisions E-2
II. Monitoring Locations E-2
III. Influent Monitoring Requirements E-3
  A. Monitoring Location INF-001 ..... E-3
IV. Effluent Monitoring Requirements E-3
  A. Monitoring Location EFF-001 ..... E-3
  B. Monitoring Location EFF-002 ..... E-4
  C. Monitoring Location EFF-003 ..... E-4
V. Whole Effluent Toxicity Testing Requirements E-5
  A. Chronic Toxicity Testing E-5
VI. Land Discharge Monitoring Requirements – Not Applicable E-9
VII. Recycling Monitoring Requirements E-9
  A. Monitoring Location REC-001 ..... E-9
  B. Recycled Water Production and Use E-10
VIII. Receiving Water Monitoring Requirements – Surface Water and Groundwater E-11
  A. Surface Water – Not Required E-11
  B. Groundwater Monitoring – Not Required E-11
IX. Other Monitoring Requirements E-11
  A. Filtration Process Monitoring E-11
  B. Outfall Inspection E-12
  C. Biological Survey E-12
X. Reporting Requirements E-13
  A. General Monitoring and Reporting Requirements E-13
  B. Self-Monitoring Reports (SMRs) E-13
  C. Discharge Monitoring Reports (DMRs) E-15
  D. Other Reports E-16
  E. Spill Notification E-19

Tables

Table E-1. Monitoring Station Locations E-2
Table E-2. Influent Monitoring E-3
Table E-3. Effluent Monitoring – Monitoring Location EFF-001 ..... E-3
Table E-4. Effluent Monitoring – Monitoring Location EFF-002 ..... E-4
Table E-5. Effluent Monitoring – Monitoring Location EFF-003 ..... E-4
Table E-6. Summary of WET Testing Requirements E-5
Table E-7. Recycled Water Monitoring – Monitoring Location REC-001 ..... E-9
Table E-8. Recycled Water Production and Use E-10
Table E-9. Monitoring Periods and Reporting Schedule E-13

ATTACHMENT E – MONITORING AND REPORTING PROGRAM (MRP)

The Code of Federal Regulations (40 C.F.R. § 122.48) requires that all NPDES permits specify monitoring and reporting requirements. California Water Code section 13383 also authorizes the Regional Water Board to require technical and monitoring reports. This MRP establishes monitoring and reporting requirements that implement federal and California regulations.

I. GENERAL MONITORING PROVISIONS

A. Wastewater Monitoring Provision. Composite samples may be taken by a proportional sampling device approved by the Executive Officer or by grab samples composited in proportion to flow. In compositing grab samples, the sampling interval shall not exceed 1 hour.

B. Supplemental Monitoring Provision. If the Permittee monitors any pollutant more frequently than required by this Order, using test procedures approved by 40 C.F.R. part 136 or as specified in this Order, the results of such monitoring shall be included in the calculation and reporting of the data submitted in the monthly and annual discharge monitoring reports.

C. Data Quality Assurance Provision. Laboratories analyzing monitoring samples shall be certified by the State Water Resources Control Board (State Water Board), Division of Drinking Water (DDW) in accordance with the provisions of Water Code section 13176, and must include quality assurance / quality control data with their analytical reports.

D. Instrumentation and Calibration Provision. All monitoring instruments and devices used by the Permittee to fulfill the prescribed monitoring program shall be properly maintained and calibrated as necessary to ensure their continued accuracy. All flow measurement devices shall be calibrated no less than the manufacturer's recommended intervals or one year intervals, (whichever comes first) to ensure continued accuracy of the devices.

E. Minimum Levels (ML) and Reporting Levels (RL). Compliance and reasonable potential monitoring analyses shall be conducted using commercially available and reasonably achievable detection limits that are lower than the applicable effluent limitations and/or water quality objectives in Table 1 of the Ocean Plan. If no Minimum Level (ML) value is below these levels, the lowest ML shall be selected as the Reporting Level (RL). Appendix II of the Ocean Plan lists the test methods the Permittee may use for reasonable potential monitoring to analyze priority pollutants.

II. MONITORING LOCATIONS

The Permittee shall establish the following monitoring locations to demonstrate compliance with the effluent limitations, discharge specifications, and other requirements in this Order:

Table E-1. Monitoring Station Locations

Discharge Point Name	Monitoring Location Name	Monitoring Location Description
--	INF-001	Influent wastewater prior to treatment and following all significant input of wastewater to the treatment system.
--	INT-001	Location for monitoring the surface loading rate through filters.

Discharge Point Name	Monitoring Location Name	Monitoring Location Description
001	EFF-001	A location where representative samples of the treated wastewater can be collected from the effluent wet well, immediately following the tertiary filters.
001	EFF-002	A location where representative samples of the treated wastewater can be collected from the chlorine contact chamber prior to discharge to the flow equalization pond.
001	EFF-003	A location where representative samples of the treated wastewater overflow from the flow equalization pond at Structure A can be collected prior to contact with the receiving water.
002	REC-001[1]	A location where representative samples of treated wastewater to be recycled can be collected.

Table Notes:
1. For ocean discharges, the Permittee monitors BOD_5 and TSS at the effluent wet well following the tertiary filters and total coliform bacteria and pH from the chlorine contact chamber. During periods of discharge to the recycled water system, monitoring at these locations shall be reported at Monitoring Location REC-001.

III. INFLUENT MONITORING REQUIREMENTS

A. Monitoring Location INF-001

1. The Permittee shall monitor influent to the Facility at Monitoring Location INF-001 as follows:

Table E-2. Influent Monitoring

Parameter	Units	Sample Type	Minimum Sampling Frequency	Required Analytical Test Method
Influent Flow[1]	mgd	Meter	Continuous	--
Biochemical Oxygen Demand 5-day @ 20°C (BOD_5)	mg/L	24-hr Composite	Monthly	Standard Methods[2]
Total Suspended Solids (TSS)	mg/L	24-hr Composite	Monthly	Standard Methods

Table Notes:
1. Each month, the Permittee shall report the maximum daily and mean daily influent flow rates.
2. In accordance with the current edition of *Standard Methods for Examination of Water and Wastewater* (American Public Health Administration) or current test procedures specified in 40 C.F.R. part 136.

IV. EFFLUENT MONITORING REQUIREMENTS

A. Monitoring Location EFF-001

1. The Permittee shall monitor treated effluent at Monitoring Location EFF-001 during periods of discharge as follows:

Table E-3. Effluent Monitoring – Monitoring Location EFF-001

Parameter	Units	Sample Type	Minimum Sampling Frequency	Required Analytical Test Method
Biochemical Oxygen Demand 5-day @ 20°C (BOD_5)[1]	mg/L	24-hr Composite	Weekly	Standard Methods[3]

Parameter	Units	Sample Type	Minimum Sampling Frequency	Required Analytical Test Method
Total Suspended Solids (TSS)[1]	mg/L	24-hr Composite	Weekly	Standard Methods
Settleable Solids[1]	mL/L	24-hr Composite	Weekly	Standard Methods
Turbidity	NTU	Meter	Continuous	Standard Methods
Oil and Grease[2]	mg/L	Grab	Quarterly	Standard Methods

Table Notes:
1. Accelerated Monitoring. If two consecutive weekly test results exceed an effluent limitation, the Permittee shall take two samples each of the two weeks following receipt of the second sample result. During the intervening period, the Permittee shall take steps to identify the cause of the exceedance and take steps to return to compliance.
2. Accelerated Monitoring. If a test result exceeds an effluent limitation the Permittee shall take two more samples, one within 14 days and one within 21 days following receipt of the initial sample result. During the intervening period, the Permittee shall take steps to identify the cause of the exceedance and take steps needed to return to compliance.
3. In accordance with the current edition of *Standard Methods for Examination of Water and Wastewater* (American Public Health Administration) or current test procedures specified in 40 C.F.R. part 136.

B. Monitoring Location EFF-002

1. The Permittee shall monitor treated effluent at Monitoring Location EFF-002 during periods of discharge as follows:

Table E-4. Effluent Monitoring – Monitoring Location EFF-002

Parameter	Units	Sample Type	Minimum Sampling Frequency	Required Analytical Test Method
pH[1]	s.u.	Grab	Weekly	Standard Methods[2]
Total Coliform Bacteria[1]	MPN/100 mL	Grab	Weekly	Standard Methods

Table Notes:
1. Accelerated Monitoring. If two consecutive weekly test results exceed an effluent limitation, the Permittee shall take two samples each of the two weeks following receipt of the second sample result. During the intervening period, the Permittee shall take steps to identify the cause of the exceedance and take steps needed to return to compliance.
2. In accordance with the current edition of *Standard Methods for Examination of Water and Wastewater* (American Public Health Administration) or current test procedures specified in 40 C.F.R. part 136.

C. Monitoring Location EFF-003

1. The Permittee shall monitor treated effluent prior to contact with the receiving water at Monitoring Location EFF-003 during periods of discharge as follows:

Table E-5. Effluent Monitoring – Monitoring Location EFF-003

Parameter	Units	Sample Type	Minimum Sampling Frequency	Required Analytical Test Method
Effluent Flow[1]	mgd	Meter	Continuous	--
Total Residual Chlorine[2]	mg/L	Grab	Weekly	Standard Methods[3]
TCDD Equivalents[4]	µg/L	24-hr Composite	Once per permit term	Standard Methods
Ammonia Nitrogen, Total (as N)	mg/L	Grab	Monthly	Standard Method

Parameter	Units	Sample Type	Minimum Sampling Frequency	Required Analytical Test Method
Ocean Plan Table 1 Pollutants[5]	µg/L	Composite[6]	Once per permit term	Standard Methods
Chronic Toxicity[7]	Pass or Fail, % Effect	Grab	Annually	See Section V below

Table Notes:
1. Each month, the Permittee shall report the maximum daily and mean daily flows.
2. Accelerated Monitoring. If two consecutive weekly test results exceed an effluent limitation, the Permittee shall take two samples each of the two weeks following receipt of the second sample result. During the intervening period, the Permittee shall take steps to identify the cause of the exceedance and take steps needed to return to compliance.
3. In accordance with the current edition of *Standard Methods for Examination of Water and Wastewater* (American Public Health Administration) or current test procedures specified in 40 C.F.R. part 136.
4. TCDD-equivalents shall mean the sum of the concentrations of chlorinated dibenzodioxins (2,3,7,8-CDDs) and chlorinated dibenzofurans (2,3,7,8-CDFs) multiplied by their respective toxicity factors.
5. Excluding Table 1 pollutants with specific monitoring requirements established by Tables E-4, E-5, and E-6 and acute toxicity.
6. Grab samples shall be used for volatile chemicals listed in Table II-1 of the Ocean Plan (2012). Composite samples shall be used for all other Ocean Plan Table 1 parameters.
7. The median monthly summary result shall be reported as "Pass" or "Fail". The maximum daily single result shall be reported as "Pass" or "Fail" with a "% Effect". Exactly three independent toxicity results are required when one toxicity test results in "Fail". Refer to section V.A.8 for accelerated monitoring.

V. WHOLE EFFLUENT TOXICITY TESTING REQUIREMENTS

Although effluent limitations for whole effluent toxicity (WET) are not established by this Order, WET testing of the discharge is required by this MRP to assess whether there is reasonable potential to exceed water quality objectives established by the Ocean Plan for chronic WET. In certain circumstances, accelerated WET testing and/or a Toxicity Reduction Evaluation (TRE) are required by the MRP. Table E-6, below, summarizes the WET testing requirements of the MRP.

Table E-6. Summary of WET Testing Requirements

Monitoring Location	WET Testing Requirement
EFF-003	Chronic WET shall be tested once per year for discharges of tertiary treated wastewater during a month not previously sampled during the permit term.

A. Chronic Toxicity Testing

The Permittee shall conduct chronic toxicity testing in accordance with the following chronic toxicity testing requirements:

1. **Test Frequency.** The Permittee shall conduct chronic WET testing in accordance with the schedule established by this MRP while discharging at Discharge Point 001, as summarized in MRP section IV.C and Table E-6, above.

2. **Discharge In-stream Waste Concentration (IWC) for Chronic Toxicity.** The chronic toxicity IWC for this discharge is 1 percent effluent.

3. **Sample Volume and Holding Time.** The total sample volume shall be determined by the specific toxicity test method used. Sufficient sample volume shall be collected to perform the

required toxicity test. All toxicity tests shall be conducted as soon as possible following sample collection. No more than 36 hours shall elapse before the conclusion of sample collection and test initiation.

4. **Chronic Marine Test Species and Test Methods.** If effluent samples are collected from outfalls discharging to receiving waters with salinity >1 ppt, the Permittee shall conduct the following chronic toxicity tests on effluent samples at the IWC for the discharge in accordance with species and test methods in *Short-term Methods for Estimating the Chronic Toxicity of Effluents and Receiving Waters to West Coast Marine and Estuarine Organisms* (EPA/600/R-95/136, 1995). Artificial sea salts shall be used to increase sample salinity. In no case shall these species be substituted with another test species unless written authorization from the Executive Officer is received.

   a. A static renewal toxicity test with the topsmelt, *Atherinops affinis* (Larval Survival and Growth Test Method 1006.011).

   b. A static non-renewal toxicity test with the purple sea urchin, *Strongylocentrotus purpuratus*, and the sand dollar, *Dendraster excentricus* (Fertilization Test Method 1008.0), or a static non-renewal toxicity test with the red abalone, *Haliotis rufescens* (Larval Shell Development Test Method).

   c. A static non-renewal toxicity test with the giant kelp, *Macrocystis pyrifera* (Germination and Growth Test Method 1009.0).

5. **Species Sensitivity Screening.** Species sensitivity screening shall be conducted during this permit's first required sample collection. The Permittee shall collect a single effluent sample and concurrently conduct three toxicity tests using the fish, an invertebrate, and the alga species identified in section V.A.4, above. This sample shall also be analyzed for the parameters required for the discharge. The species that exhibits the highest "Percent (%) Effect" at the discharge IWC during species sensitivity screening shall be used for routine monitoring during the permit term.

6. **Quality Assurance and Additional Requirements.** Quality assurance measures, instructions, and other recommendations and requirements are found in the test methods manual previously referenced. Additional requirements are specified below.

   a. The discharge is subject to determination of "Pass" or "Fail" and "Percent (%) Effect" from a single-effluent concentration chronic toxicity test at the discharge IWC using the Test of Significant Toxicity (TST) approach described in *National Pollutant Discharge Elimination System Test of Significant Toxicity Implementation Document* (EPA 833-R10-003, 2010), Appendix A, Figure A-1, and Table A-1. The null hypothesis (H_o) for the TST approach is: Mean discharge IWC response 0.75 × Mean control response. A test result that rejects this null hypothesis is reported as "Pass". A test result that does not reject this null hypothesis is reported as "Fail". The relative "Percent (%) Effect" at the discharge IWC is defined and reported as: ((Mean control response Mean discharge IWC response) ÷ Mean control response)) × 100.

   b. If the effluent toxicity test does not meet all test acceptability criteria (TAC) specified in the referenced test method, then the Permittee must re-sample and re-test within 14 days.

c. Dilution water and control water, including brine controls, shall be laboratory water prepared and used as specified in the test methods manual. If dilution water and control water is different from test organism culture water, then a second control using culture water shall also be used.

d. Monthly reference toxicant testing shall be performed. All reference toxicant test results should be reviewed and reported.

e. The Permittee shall perform toxicity tests on final effluent samples. Chlorine and ammonia shall not be removed from the effluent sample prior to toxicity testing, unless explicitly authorized under this section of the MRP and the rationale is explained in the Fact Sheet (Attachment F).

f. **Ammonia Removal.** Except with prior approval from the Executive Officer of the Regional Water Board, ammonia shall not be removed from bioassay samples. The Permittee must demonstrate the effluent toxicity is caused by ammonia because of increasing test pH when conducting the toxicity test. It is important to distinguish the potential toxic effects of ammonia from other pH sensitive chemicals, such as certain heavy metals, sulfide, and cyanide. The following conditions and steps may be used to demonstrate that the toxicity is caused by ammonia and not other toxicants before the Executive Officer would allow for control of pH in the test.

i. There is consistent toxicity in the effluent and the maximum pH in the toxicity test is in the range to cause toxicity due to increased pH.

ii. Chronic ammonia concentrations in the effluent are greater than 4 mg/L total ammonia.

iii. Conduct graduated pH tests as specified in the toxicity identification evaluation (TIE) methods. For example, mortality should be higher at pH 8 and lower at pH 6.

iv. Treat the effluent with a zeolite column to remove ammonia. Mortality in the zeolite treated effluent should be lower than the non-zeolite treated effluent. Then add ammonia back to the zeolite-treated samples to confirm toxicity due to ammonia.

When it has been demonstrated that toxicity is due to ammonia because of increasing test pH, pH may be controlled using appropriate procedures which do not significantly alter the nature of the effluent.

7. **Notification.** The Permittee shall notify the Regional Water Board verbally within 72 hours and in writing within 14 days after the receipt of test results exceeding a median monthly summary result of "Fail" during routine monitoring or a single test result of "Fail" during accelerated monitoring.

8. **Accelerated Monitoring Requirements.** Within 24 hours of the time the Permittee becomes aware of a median monthly summary result "Fail", the Permittee shall implement an accelerated monitoring schedule consisting of four toxicity tests—consisting of 5-effluent concentrations (including the discharge IWC) and a control—conducted at approximately 2 week intervals, over an 8 week period. If each of the accelerated toxicity tests results is "Pass," the Permittee shall return to routine monitoring for the next monitoring period. If

one of the accelerated toxicity tests results in "Fail", the Permittee shall immediately implement the Toxicity Reduction Evaluation (TRE) Process conditions set forth below.

9. Toxicity Reduction Evaluation (TRE) Process

a. Preparation and Implementation of a Detailed TRE Work Plan. The Permittee shall immediately initiate a TRE using, according to type of treatment facility, EPA manual *Generalized Methodology for Conducting Industrial Toxicity Reduction Evaluations* (EPA/600/2-88/070, 1989) and within 30 days submit to the Regional Water Board Executive Officer a detailed TRE Work Plan, which shall follow the generic initial investigation TRE Work Plan revised as appropriate for this toxicity event. It shall include the following information, and comply with additional conditions set by the Regional Water Board Executive Officer:

i. Further actions by the Permittee to investigate, identify, and correct causes of toxicity.

ii. Actions the Permittee will take to mitigate effects of the discharge and prevent the recurrence of toxicity.

iii. A schedule for these actions, progress reports, and the final report.

b. TIE Implementation. The Permittee may initiate a TIE as part of a TRE to identify the causes of toxicity using the same species and test methods and, as guidance, EPA manuals: *Methods for Aquatic Toxicity Identification Evaluations: Phase I Toxicity Characterization Procedures* (EPA/600/6-91/003, 1991); *Methods for Aquatic Toxicity Identification Evaluations, Phase II Toxicity Identification Procedures for Samples Exhibiting Acute and Chronic Toxicity* (EPA/600/R-92/080, 1993); *Methods for Aquatic Toxicity Identification Evaluations, Phase III Toxicity Confirmation Procedures for Samples Exhibiting Acute and Chronic Toxicity* (EPA/600/R-92/081, 1993); and *Marine Toxicity Identification Evaluation (TIE): Phase I Guidance Document* (EPA/600/R-96-054, 1996). The TIE should be conducted on the species demonstrating the most sensitive toxicity response.

c. Many recommended TRE elements parallel required or recommended efforts for source control, pollution prevention, and storm water control programs. TRE efforts should be coordinated with such efforts. As toxic substances are identified or characterized, the Permittee shall continue the TRE by determining the sources and evaluating alternative strategies for reducing or eliminating the substances from the discharge. All reasonable steps shall be taken to reduce toxicity to levels consistent with toxicity evaluation parameters.

d. The Permittee shall conduct routine effluent monitoring for the duration of the TRE process. Additional accelerated monitoring and TRE work plans are not required once a TRE has begun.

e. The Regional Water Board recognizes that toxicity may be episodic and identification of the causes and reduction of sources of toxicity may not be successful in all cases. The TRE may be ended at any stage if monitoring finds there is no longer toxicity.

10. **Reporting.** The Self-Monitoring Report (SMR) shall include a full laboratory report for each toxicity test. This report shall be prepared using the format and content of the test methods manual chapter called Report Preparation, including:

    a. The toxicity test results for the TST approach, reported as "Pass" or "Fail" and "Percent (%) Effect" at the chronic toxicity IWC for the discharge.

    b. Water quality measurements for each toxicity test (e.g., pH, dissolved oxygen, temperature, conductivity, hardness, salinity, chlorine, ammonia).

    c. TRE/TIE results. The Executive Officer shall be notified no later than 30 days from completion of each aspect of TRE/TIE analyses.

    d. Statistical program (e.g., TST calculator, CETIS, etc.) output results for each toxicity test.

VI. LAND DISCHARGE MONITORING REQUIREMENTS – NOT APPLICABLE

VII. RECYCLING MONITORING REQUIREMENTS

A. Monitoring Location REC-001

1. During the periods of water recycling, the following monitoring shall be conducted at Monitoring Location REC-001:

Table E-7. Recycled Water Monitoring – Monitoring Location REC-001

Parameter	Units	Sample Type	Minimum Sampling Frequency	Required Analytical Test Method
Flow[1]	mgd	Meter	Continuous	--
Biochemical Oxygen Demand 5-day @ 20°C	mg/L	24-hr Composite	Weekly	Standard Methods[2]
pH	s.u.	Grab	Weekly	Standard Methods
Total Suspended Solids (TSS)	mg/L	24-hr Composite	Weekly	Standard Methods
Total Coliform Bacteria	MPN/100 mL	Grab	Daily[3]	Standard Methods
Total Residual Chlorine	mg/L	Meter	Continuous	Standard Methods
Disinfection Contact Time	minutes	Measurement	Daily	--
Disinfection CT Value	mg-min/L	Calculation	Daily	--
Nitrate Nitrogen, Total (as N)[4]	mg/L	Grab	[5]	Standard Methods
Nitrite Nitrogen, Total (as N)[4]	mg/L	Grab	[5]	Standard Methods
Ammonia Nitrogen, Total (as N)[4]	mg/L	Grab	[5]	Standard Methods
Organic Nitrogen, Total (as N)[4]	mg/L	Grab	[5]	Standard Methods
Total Dissolved Solids (TDS)	mg/L	Grab	[5]	Standard Methods
Chloride	mg/L	Grab	[5]	Standard Methods
Boron	mg/L	Grab	[5]	Standard Methods

Parameter	Units	Sample Type	Minimum Sampling Frequency	Required Analytical Test Method
Sodium	mg/L	Grab	[5]	Standard Methods
Visual Observations[6]	--	--	--	--

Table Notes:

1. For each month, the Permittee shall record the number of days that treated wastewater was used for recycled water irritation at the Mendocino High School athletic fields or other approved recycled water use sites, as well as the average and maximum daily flow rate.
2. In accordance with the current edition of *Standard Methods for Examination of Water and Wastewater* (American Public Health Administration) or current test procedures specified in 40 C.F.R. part 136.
3. Total coliform monitoring shall occur each day that recycled water is transferred from the wastewater treatment plant to the recycled water system. All total coliform samples shall be analyzed by the Permittee utilizing analytical equipment in the Permittee's laboratory. Once a week, two coliform samples shall be collected at the same time, with one sample to be submitted to a certified laboratory for analysis and the other sample to be analyzed in the Permittee's laboratory.
4. Monitoring for nitrate, nitrite, ammonia, and organic nitrogen is for the purpose of determining total nitrogen concentration for agronomic rate calculations.
5. Nutrients (nitrate, nitrite, ammonia, total organic nitrogen) and salts (TDS, chloride, boron, and sodium) shall be monitored two times during the 2016 recycled water delivery season.
6. During periods of discharge to the irrigation system, visual observations shall be conducted at least monthly for agronomic applications to verify compliance with recycled water requirements in Order section IV.C, Recycling Specifications and Requirements. The inspection frequency shall be increased for use sites with a history of non-compliance with water recycling requirements established in this Order. Visual monitoring shall confirm proper operations of the recycled water system and associated BMPs. The Permittee shall include a record of any malfunctions or findings of improper operations, including, but not limited to odors, evidence of surface runoff, or ponding that exceeds 24 hours. Visual observations may be performed by the irrigation users in accordance with the Permittee's user agreements. The quarterly recycled water report shall include the daily volume of treated wastewater discharged to the irrigation system and any observations indicating non-compliance with the provisions of the recycling requirements.

2. The Permittee shall comply with Water Recycling Specifications and Requirements contained in section IV.C of this Order.

B. Recycled Water Production and Use

1. Recycled water quality characteristics and precipitation data shall be used to ascertain nitrogen loading rates at each recycled water use site. The following information shall be reported for each use site or use site type.

2. Reporting of the required monitoring shall be provided annually in the Annual Recycled Water Report to the Regional Water Board, and annually to recycled water users.

Table E-8. Recycled Water Production and Use

Parameter	Units	Sample Type	Frequency	
			Sampling	Reporting
Volume of Recycled Water[1,2]	acre-feet	Meter	Monthly[3]	Annually
Total Area of Application	acres	Observation	Monthly	Annually
Total Nitrogen Application Rate[4,5]	lbs/acre-month	Calculation	Monthly	Annually

Parameter	Units	Sample Type	Frequency	
			Sampling	Reporting

Table Notes:
1. Estimation of the volume of the recycled water shall not include other potable or non-potable "make-up" water used in conjunction with recycled water.
2. May be estimated based on daily percentage of recycled water supplied via a non-potable water supply system.
3. May be based on available data (e.g., meters read every other month or quarterly).
4. Nitrogen application rate shall consider nutrients contained in the recycled water, based on analytical data obtained by the Permittee.
5. Nitrogen concentrations shall be calculated and reported "as N". For example, nitrate-nitrogen = 27 mg/L as NO_3 shall be converted and reported as nitrate-nitrogen = 6 mg/L as N.

VIII. RECEIVING WATER MONITORING REQUIREMENTS – SURFACE WATER AND GROUNDWATER

A. Surface Water – Not Required

B. Groundwater Monitoring – Not Required

IX. OTHER MONITORING REQUIREMENTS

A. Filtration Process Monitoring

Filtration process monitoring shall demonstrate compliance with section IV.C.3.a (Filtration Process Requirements) of the Order and applies when discharging to the recycled water system. The Permittee is required to implement the following filtration process monitoring:

1. Filter Monitoring (Monitoring Location INT-001)

a. **Monitoring.** The Permittee shall calculate on a daily basis the surface loading rate in gallons per minute per square feet and report the maximum surface loading rate and any exceedances of the surface loading rate limitations specified in section IV.C.3.a.i of the Order. The rate of flow through the tertiary filters shall be measured at Monitoring Location INT-001.

b. **Compliance.** Compliance with the maximum daily filter surface loading rate as specified in section 60301.320 of title 22 shall be calculated based on the flow rate through each filter unit.

c. **Reporting.** The maximum daily filter surface loading rate shall be reported on the quarterly self-monitoring report.

2. Filter Monitoring (Monitoring Location EFF-002)

a. **Monitoring.** The turbidity of the filter effluent shall be continuously measured and recorded at Monitoring Location EFF-002 during periods of water recycling. Should the turbidity meter and recorder fail, grab sampling at a minimum frequency of 1.2 hours may be substituted for a period of up to 24 hours. The recorded data shall be maintained by the Permittee for at least 3 years. The daily average, daily maximum and 95th percentile turbidity results shall be reported on the quarterly monitoring reports.

b. **Compliance.** Compliance with the turbidity specification specified in section IV.C.3.a.ii (Filtration Process Requirements) of this Order shall be determined using the levels of recorded turbidity taken at intervals of no more than 1.2 hours over a 24-hour period.

c. **Reporting.** If the filter effluent turbidity exceeds an average of 2 NTU during a 24-hour period, 5 NTU more than 5 percent of the time during a 24-hour period, or 10 NTU at any time, the incident shall be reported in the quarterly self-monitoring report and the incident shall be reported to the Regional Water Board by telephone within 24 hours in accordance with Provision VI.A.2.b of the Order only if the non-compliant effluent was sent to the recycled water distribution system. A written report describing the incident and the actions undertaken in response shall be included in the quarterly self-monitoring report. Mitigation of the event shall consist of ceasing the discharge to the recycled water storage tank, diverting the non-compliant effluent, or automatically activated chemical addition to comply with title 22 requirements (sections 60304 and 60307).

3. Disinfection Process Monitoring (Monitoring Location REC-001)

a. **Monitoring.** The chlorine residual of the effluent shall be monitored continuously at the end of the chlorine contact chamber and recorded, and the modal contact time shall be determined at the same point.

b. **Compliance.** The chlorine disinfection CT (the product of total chlorine residual and modal contact time) shall not fall below 450 mg-min/L, with modal contact time of at least 90 minutes, as required by section IV.C.3.b of this Order.

c. **Reporting**. If the chlorination equipment fails or the chlorine disinfection CT is less than 450 mg-min/L, the event shall be reported in the quarterly self-monitoring report and the incident shall be reported to the Regional Water Board by telephone within 24 hours in accordance with Provision VI.A.2.b of the Order only if the non-compliant effluent was sent to the recycled water distribution system. A written report describing the incident and the actions undertaken in response shall be included in the quarterly self-monitoring report. Upon discovery of any equipment failure or failure to achieve 450 mg-min/L after disinfection, inadequately treated and disinfected wastewater shall be diverted to a storage basin or an upstream process for adequate treatment.

B. Outfall Inspection

Divers shall visually inspect the outfall structure, including the diffuser ports, at least once during the life of this permit to verify operational status of the outfall. A report documenting outfall condition and maintenance, including any observed cracks, breaks, malfunctions, and appropriate repairs, shall be submitted within 90 days of completing the inspection and no later than **April 3, 2020**. The Permittee shall submit to the Regional Water Board Executive Officer for approval an Outfall Inspection Work Plan no later than **December 1, 2017**.

C. Biological Survey

The Permittee shall conduct a comparative evaluation of indigenous biota in the vicinity of the outfall using a qualified aquatic biologist, at least once every 5 years. The biologist shall prepare a report of observations, including objectionable aquatic growths, floating particulates or grease and oil, aesthetically undesirable discoloration of the ocean surface, color of fish or shellfish, and any evidence of degradation of indigenous biota attributable to the rate of deposition of inert solids, settleable material, nutrient materials, increased concentrations of organic materials, or increased concentrations of Ocean Plan Table 1 substances. The Permittee shall submit to the Regional Water Board Executive Officer for approval a Biological Survey work plan no later than

November 1, 2017, in order to complete the survey and prepare a final report by the due date for receipt of an application for permit renewal. The final report shall be submitted no later than **April 3, 2020**.

X. REPORTING REQUIREMENTS

A. General Monitoring and Reporting Requirements

1. The Permittee shall comply with all Standard Provisions (Attachment D) related to monitoring, reporting, and recordkeeping.

B. Self-Monitoring Reports (SMRs)

1. The Permittee shall submit electronic Self-Monitoring Reports (eSMRs) using the State Water Board's California Integrated Water Quality System (CIWQS) Program Web site (http://www.waterboards.ca.gov/ciwqs/index.html). The CIWQS Web site will provide additional directions for SMR submittal in the event there will be service interruption for electronic submittal. The Permittee shall maintain sufficient staffing and resources to ensure it submits eSMRs that are complete and timely. This includes provision of training and supervision of individuals (e.g., Permittee personnel or consultant) on how to prepare and submit eSMRs.
2. The Permittee shall report in the SMR the results for all monitoring specified in this MRP under sections III through IX. The Permittee shall submit monthly SMRs including the results of all required monitoring using U.S. EPA-approved test methods or other test methods specified in this Order. SMRs are to include all new monitoring results obtained since the last SMR was submitted. If the Permittee monitors any pollutant more frequently than required by this Order, the results of this monitoring shall be included in the calculations and reporting of the data submitted in the SMR.
3. All monitoring results reported shall be supported by the inclusion of the complete analytical report from the laboratory that conducted the analyses.
4. Monitoring periods and reporting for all required monitoring shall be completed according to the following schedule:

Table E-9. Monitoring Periods and Reporting Schedule

Sampling Frequency	Monitoring Period Begins On…	Monitoring Period	SMR Due Date
Continuous	Permit effective date	All	First day of second calendar month following the end of each quarter
Daily	Permit effective date	(Midnight through 11:59 PM) or any 24-hour period that reasonably represents a calendar day for purposes of sampling.	First day of second calendar month following the end of each quarter
Weekly	Sunday following permit effective date or on permit effective date if on a Sunday	Sunday through Saturday	First day of second calendar month following the end of each quarter

Sampling Frequency	Monitoring Period Begins On…	Monitoring Period	SMR Due Date
Monthly	First day of calendar month following permit effective date or on permit effective date if that date is first day of the month	First day of calendar month through last day of calendar month	First day of second calendar month following the end of each quarter
Quarterly	First day of calendar quarter following permit effective date or on permit effective date if that date is first day of the month	January 1 through March 31 April 1 through June 30 July 1 through September 30 October 1 through December 31	First day of second calendar month following the end of each quarter
Annually	January 1 following (or on) permit effective date	January 1 through December 31	March 1 (of the following year)
Once per permit term	Permit effective date	All	180 days prior to permit expiration

Table Note:
1. Quarterly monitoring periods are as follows: January 1 through March 31; April 1 through June 30; July 1 through September 30; and October 1 through December 31.

5. **Reporting Protocols.** The Permittee shall report with each sample result the applicable ML, the RL, and the current Method Detection Limit (MDL), as determined by the procedure in 40 C.F.R. § 136.

   The Permittee shall report the results of analytical determinations for the presence of chemical constituents in a sample using the following reporting protocols:

   a. Sample results greater than or equal to the reported ML shall be reported as measured by the laboratory (i.e., the measured chemical concentration in the sample).

   b. Sample results less than the reported ML, but greater than or equal to the laboratory's MDL, shall be reported as "Detected, but Not Quantified," or DNQ. The estimated chemical concentration of the sample shall also be reported.

   For the purposes of data collection, the laboratory shall write the estimated chemical concentration next to DNQ as well as the words "Estimated Concentration" (may be shortened to "Est. Conc."). The laboratory may, if such information is available, include numerical estimates of the data quality for the reported result. Numerical estimates of data quality may be percent accuracy (± a percentage of the reported value), numerical ranges (low to high), or any other means considered appropriate by the laboratory.

   c. Sample results less than the laboratory's MDL shall be reported as "Not Detected," or ND.

   d. The Permittee is to instruct laboratories to establish calibration standards so that the ML value (or its equivalent if there is differential treatment of samples relative to calibration standards) is the lowest calibration standard. At no time is the Permittee to use analytical data derived from extrapolation beyond the lowest point of the calibration curve.

6. The Permittee shall submit SMRs in accordance with the following requirements:

a. The Permittee shall arrange all reported data in a tabular format. The data shall be summarized to clearly illustrate whether the facility is operating in compliance with interim and/or final effluent limitations. The reported data shall include calculation of all effluent limitations that require averaging, taking of a median, or other computation. The Permittee is not required to duplicate the submittal of data that is entered in a tabular format within CIWQS. When electronic submittal of data is required and CIWQS does not provide for entry into a tabular format within the system, the Permittee shall electronically submit the data in a tabular format as an attachment.

b. The Permittee shall attach a cover letter to the SMR. The information contained in the cover letter shall clearly identify:

i. Facility name and address;

ii. WDID number;

iii. Applicable period of monitoring and reporting;

iv. Violations of the WDRs (identified violations must include a description of the requirement that was violated and a description of the violation);

v. Corrective actions taken or planned; and

vi. The proposed time schedule for corrective actions.

c. SMRs must be submitted to the Regional Water Board, signed and certified as required by the Standard Provisions (Attachment D), to the CIWQS Program Web site (http://www.waterboards.ca.gov/ciwqs/index.html). In the event that that an alternate method for submittal of SMRs is required, the Permittee shall submit the SMR electronically via e-mail to NorthCoast@waterboards.ca.gov or on disk (CD or DVD) in Portable Document Format (PDF) file in lieu of paper-sourced documents. The guidelines for electronic submittal of documents can be found on the Regional Water Board website at http://www.waterboards.ca.gov/northcoast.

C. Discharge Monitoring Reports (DMRs)

1. DMRs are U.S. EPA reporting requirements. Dischargers operating a "minor" facility, if so designated in the Fact Sheet, are excepted from submitting DMRs under these requirements. However, at any time during the term of this permit, the State Water Board or Regional Water Board may notify such a discharger to electronically submit DMRs, at which time this exception will no longer apply.

2. In the event that the Permittee is notified of the need to submit DMRs, the Permittee shall electronically certify and submit DMRs together with SMRs using Electronic Self-Reporting module eSMR 2.5 or any upgraded version. Electronic submittal of DMRs will be in addition to electronic submittal of SMRs. Information about electronic submittal of DMRs is provided by the Discharge Monitoring Report web site as follows: (http://www.waterboards.ca.gov/water_issues/programs/discharge_monitoring/).

D. Other Reports

1. The Permittee shall report the results of any special studies, acute and chronic toxicity testing, TRE/TIE, PMP, and Pollution Prevention Plan required by Special Provisions – VI.C.2 and VI.C.3 of this Order.

2. **Annual Report.** The Permittee shall submit an annual report to the Regional Water Board for each calendar year through the CIWQS Program Web site. In the event that an alternate method of submitting the annual report is required, the Permittee shall submit the report to the e-mail address in section X.B.6.g., above. The report shall be submitted by March 1 of the following year. The report shall, at a minimum, include the following:

a. Both tabular and, where appropriate, graphical summaries of the monitoring data and disposal records from the previous year. If the Permittee monitors any pollutant more frequently than required by this Order, using test procedures approved under 40 C.F.R. part 136 or as specified in this Order, the results of this monitoring shall be included in the calculation and report of the data submitted SMR.

b. A comprehensive discussion of the Facility's compliance (or lack thereof) with all effluent limitations and other WDRs, and the corrective actions taken or planned, which may be needed to bring the discharge into full compliance with the Order.

c. The names and general responsibilities of all persons employed at the Facility;

d. The names and telephone numbers of persons to contact regarding the Facility for emergency and routine situations; and

e. A statement certifying when the flow meter(s) and other monitoring instruments and devices were last calibrated, including identification of who performed the calibration.

f. **Source Control Activity Reporting.** The Permittee shall submit, as part of its annual report to the Regional Water Board, a description of the Permittee's source control activities, as required by Special Provision VI.C.5.b., over the previous 12 months. This annual report is due on March 1 of each year, beginning on March 1, 2016, and shall contain:

i. A copy of the source control standards, including a table presenting local limits.

ii. A description of the waste hauler permit system; if applicable.

iii. A summary of the compliance and enforcement activities taken by the Permittee during the past year, which ensures industrial user compliance. The summary shall include the names and addresses of any industrial or commercial users under surveillance by the Permittee, an explanation of whether they were inspected, sampled, or both, the frequency of these activities at each user, and the conclusions or results from the inspection or sampling of each user.

iv. A summary of public outreach activities to educate and inform the public about the importance of preventing discharges of inappropriate wastes (e.g., fats, oils, and grease, pharmaceuticals, pesticides and other toxic materials) to the Facility.

g. **Sludge Handling and Disposal Activity Reporting.** The Permittee shall submit, as part of its annual report to the Regional Water Board, a description of the Permittee's

solids handling, disposal and reuse activities, as required by Special Provision VI.C.5.c of this Order, over the previous 12 months. At a minimum, the report shall contain:

i. Annual sludge production, in dry tons and percent solids;

ii. Sludge monitoring results;

iii. A schematic diagram showing sludge handling facilities (e.g., digesters, thickeners, drying beds, etc.), if any and a solids flow diagram;

iv. Methods of final disposal of sludge:

(a) For any portion of sludge discharged to a sanitary landfill, the Permittee shall provide the volume of sludge transported to the landfill, the names and locations of the facilities receiving sludge, the Regional Water Board's WDRs order number for the regulated landfill, and the landfill classification.

(b) For any portion of sludge discharged through land application, the Permittee shall provide the volume of biosolids applied, the date and locations where biosolids were applied, the Regional Water Board's WDRs order number for the regulated discharge, a demonstration that the discharge was conducted in compliance with applicable permits and regulations, and, if applicable, corrective actions taken or planned to bring the discharge into compliance with WDRs.

(c) For any portion of sludge further treated through composting, the Permittee shall provide a summary of the composting process, the volume of sludge composted, and a demonstration and signed certification statement that the composting process and final product met all requirements for Class A biosolids.

v. Results of internal or external third-party audits of the Biosolids Management System, including reported program deficiencies and recommendations, required corrective actions, and a schedule to complete corrective actions.

h. **Storm Water Reporting.** The Permittee shall submit, as part of its annual report to the Regional Water Board, an evaluation of the effectiveness of the Permittee's BMPs to control the run on of storm water to the treatment facility site, as well as activities to maintain and upgrade these BMPs, over the previous 12 months, as required by Special Provision VI.C.6 of this Order.

3. Water Recycling System

a. **Water Recycling Operations Reporting.** The Permittee shall submit reports pertaining to the operation, performance, monitoring, and other activities related to water recycling as follows:

i. **Quarterly Recycled Water Report.** The Permittee shall submit a quarterly recycled water report, as required by section 13523.1(b)(4) of the Water Code and other requirements of this Order, containing the following information:

(a) Total volume of recycled water supplied to each recycled water user and the amount of acreage irrigated for each month of the reporting period;

(b) A summary of recycled water use site inspections conducted by the Permittee or recycled water users. The Permittee shall report:

(1) Inspection dates;

(2) All observations of recycled water over-application, such as ponding and irrigation runoff, including the length of time that such conditions existed, and measures taken to correct the cause of over-application;

(3) A summary of operational problems, irrigation equipment malfunctions and any diversion of recycled water which does not meet the requirements specified in the Order;

(4) All equipment or process failures initiating an alarm, as well as any corrective and preventative actions taken; and

(5) Documentation of notifications to users if any recycled water was delivered that did not meet the requirements specified in the Order.

ii. Annual Recycled Water Report. The annual report shall include but not be limited to the following:

(a) A compliance summary and discussion of the compliance record for the prior calendar year, including:

(1) In the event of noncompliance, the report shall also discuss the corrective actions taken and planned to bring the recycled water program into full compliance with this Order;

(2) Certification that all reasonable BMPs and management practices were implemented to ensure efficient and compliant operation of the recycled water system; and

(3) Identification of any other problems that occurred in the recycled water system during the prior year, including repeated occurrences of incidental runoff of which the Permittee is aware, and plans to rectify those problems in the coming year.

(b) A summary of major repairs scheduled or completed that affected the recycled water system appurtenances and irrigation areas;

(c) Enforcement and monitoring activities that occurred during the previous year, and identification of any problems and how the problems were addressed;

(d) If applicable, a summary of all cross-connection testing and back-flow prevention activities (inspections, maintenance) and a summary of any problems identified, or certification that no problems occurred; and

(e) A description of agronomic rate compliance, pursuant to section VII.B of the MRP.

E. Spill Notification

1. **Spills and Unauthorized Discharges.** Information regarding all spills and unauthorized discharges (except SSOs and recycled water) that may endanger health or the environment shall be provided orally to the Regional Water Board[1] within 24 hours from the time the Permittee becomes aware of the circumstances and a written report shall also be provided within five (5) days of the time the Permittee becomes aware of the circumstances, in accordance with Section V.E of Attachment D.

   Information to be provided verbally to the Regional Water Board includes:

   a. Name and contact information of caller;

   b. Date, time, and location of spill occurrence;

   c. Estimates of spill volume, rate of flow, and spill duration, if available and reasonably accurate;

   d. Surface water bodies impacted, if any;

   e. Cause of spill, if known at the time of the notification;

   f. Cleanup actions taken or repairs made at the time of the notification; and

   g. Responding agencies.

2. **Sanitary Sewer Overflows.** Notification and reporting of sanitary sewer overflows is conducted in accordance with the requirements of Order No. 2006-0003-DWQ (Statewide General WDRs for Sanitary Sewer Systems), which is not incorporated herein by reference, and any revisions thereto.

3. **Recycled Water Spills.** Notification and Reporting of spills and unauthorized discharges of recycled water discharged in or on any waters of the state, as defined in Water Code section 13050, shall be conducted in accordance with the following:

   a. Tertiary Recycled Water[2]

   i. For unauthorized discharges of 50,000 gallons or more of tertiary recycled water, the Permittee shall immediately notify the Regional Water Board as soon as (a) the Permittee has knowledge of the discharge or probable discharge, (b) notification is possible, and (c) notification can be provided without substantially impeding cleanup or other emergency measures.

   ii. For unauthorized discharges of more than 1,000 gallons, but less than 50,000 gallons of tertiary recycled water, the Permittee shall notify the Regional Water Board as soon as possible, but no longer than three days after becoming aware of the discharge.

---

[1] The contact number of the Regional Water Board during normal business hours is (707) 576-2220. After normal business hours, spill reporting to the California Governor's Office of Emergency Services Warning Center (CalOES) will satisfy the 24 hour spill reporting requirement for the Regional Water Board. The contact number for spill reporting for the CalOES is (800) 852-7550.

[2] Tertiary Recycled Water means "disinfected tertiary 2.2 recycled water" as defined by DDW or wastewater receiving advanced treatment beyond disinfected tertiary 2.2 recycled water.

ATTACHMENT F – FACT SHEET

Contents

I. Permit Information F-3
II. Facility Description F-4
A. Description of Wastewater and Biosolids Treatment and Controls F-4
B. Discharge Points and Receiving Waters F-5
C. Summary of Existing Requirements and Self-Monitoring Report (SMR) Data F-5
D. Compliance Summary F-6
E. Planned Changes F-6
III. Applicable Plans, Policies, and Regulations F-6
A. Legal Authorities F-6
B. California Environmental Quality Act (CEQA) F-7
C. State and Federal Laws, Regulations, Policies, and Plans F-7
D. Impaired Water Bodies on CWA 303(d) List F-10
E. Other Plans, Policies and Regulations F-10
IV. Rationale for Effluent Limitations and Discharge Specifications F-11
A. Discharge Prohibitions F-11
B. Technology-Based Effluent Limitations F-14
1. Scope and Authority F-14
2. Applicable Technology-Based Effluent Limitations F-15
C. Water Quality-Based Effluent Limitations (WQBELs) F-17
1. Scope and Authority F-17
2. Applicable Beneficial Uses and Water Quality Criteria and Objectives F-17
3. Determining the Need for WQBELs F-18
4. WQBEL Calculations F-23
5. Whole Effluent Toxicity (WET) F-24
D. Final Effluent Limitation Considerations F-27
1. Anti-Backsliding Requirements F-27
2. Antidegradation Policies F-28
3. Stringency of Requirements for Individual Pollutants F-28
E. Interim Effluent Limitations – Not Applicable F-29
F. Land Discharge Specifications – Not Applicable F-29
G. Recycling Specifications F-29
V. Rationale for Receiving Water Limitations F-33
A. Surface Water F-33
B. Groundwater F-33
VI. Rationale for Provisions F-33
A. Standard Provisions F-33
B. Special Provisions F-34
1. Reopener Provisions F-34
2. Special Studies and Additional Monitoring Requirements F-35
3. Best Management Practices and Pollution Prevention F-35
4. Construction, Operation, and Maintenance Specifications F-35

5. Special Provisions for Municipal Facilities (POTWs Only) F-35
6. Other Special Provisions F-38
7. Compliance Schedules – Not Applicable F-38
VII. Rationale for Monitoring and Reporting Requirements F-38
A. Influent Monitoring F-38
B. Effluent Monitoring F-38
C. Whole Effluent Toxicity Testing Requirements F-39
D. Recycling Monitoring Requirements F-39
E. Receiving Water Monitoring – Not Applicable F-40
F. Other Monitoring Requirements F-40
G. Reporting Requirements F-40
VIII. Public Participation F-40
A. Notification of Interested Parties F-41
B. Written Comments F-41
C. Public Hearing F-41
D. Waste Discharge Requirements Petitions F-41
E. Information and Copying F-42
F. Register of Interested Persons F-42
G. Additional Information F-42

Tables

Table F-1. Facility Information F-3
Table F-2. Historic Effluent Limitations and Monitoring Data F-5
Table F-3. Basin Plan Beneficial Uses F-8
Table F-4. Ocean Plan Beneficial Uses F-9
Table F-5. Summary of Technology-Based Effluent Limitations F-16
Table F-6. Summary of Reasonable Potential Analysis Results F-20
Table F-7. Background Seawater Concentrations – Ocean Plan F-24
Table F-8. Water Quality Objectives – Ocean Plan F-24
Table F-9. Summary of Chronic Toxicity Results F-25
Table F-10. Summary of Final Effluent Limitations F-29
Table F-11. Summary of Recycling Discharge Specifications F-32
Attachment F-1 – Mendocino City CSD Wastewater Treatment Plant RPA Summary F-1

ATTACHMENT F – FACT SHEET

As described in section I, the Regional Water Board incorporates this Fact Sheet as findings of the Regional Water Board supporting the issuance of this Order. This Fact Sheet includes the legal requirements and technical rationale that serve as the basis for the requirements of this Order.

This Order has been prepared under a standardized format to accommodate a broad range of discharge requirements for dischargers in California. Only those sections or subsections of this Order that are specifically identified as "not applicable" have been determined not to apply to this Permittee. Sections or subsections of this Order not specifically identified as "not applicable" are fully applicable to this Permittee.

I. PERMIT INFORMATION

The following table summarizes administrative information related to the facility.

Table F-1. Facility Information

WDID	1B83129OMEN
Permittee	Mendocino City Community Services District (CSD)
Name of Facility	Mendocino CSD Wastewater Treatment Plant
Facility Address	10500 Kelly Street Mendocino, CA 95460 Mendocino County
Facility Contact, Title and Phone	Michael Kelley, District Superintendent, (707) 937-5790
Authorized Person to Sign and Submit Reports	Michael Kelley, District Superintendent, (707) 937-5790
Mailing Address	P.O. Box 1029, Mendocino, CA 95460
Billing Address	Same as Mailing Address
Type of Facility	Publicly Owned Treatment Works (POTW)
Major or Minor Facility	Minor
Threat to Water Quality	2
Complexity	B
Pretreatment Program	Not Applicable
Recycling Requirements	Producer
Facility Permitted Flow	0.3 million gallons per day (mgd) (average dry weather treatment capacity) 1.0 mgd (peak daily wet weather treatment capacity)
Facility Design Flow	0.3 mgd (average dry weather treatment capacity) 1.0 mgd (peak daily wet weather treatment capacity)
Watershed	Mendocino Coast Hydrologic Unit
Receiving Water	Pacific Ocean
Receiving Water Type	Ocean Waters

A. Mendocino City Community Services District (CSD) (hereinafter Permittee) is the owner and operator of the Mendocino City CSD Wastewater Treatment Plant (hereinafter Facility), a POTW.

For the purposes of this Order, references to the "discharger" or "permittee" in applicable federal and state laws, regulations, plans, or policy are held to be equivalent to references to the Permittee herein.

B. The Facility discharges tertiary treated wastewater to the Pacific Ocean, a water of the United States. The Permittee was previously regulated by Order No. R1-2010-0020 and National Pollutant Discharge Elimination System (NPDES) Permit No. CA0022870 adopted on April 29, 2010 and expired on July 1, 2015. The terms and conditions of the current Order and MRP have been automatically continued and remain in effect until new Waste Discharge Requirements (WDRs) and NPDES permit are adopted pursuant to this Order. Attachment B provides a map of the area around the Facility. Attachment C provides a flow schematic of the Facility.

C. The Permittee filed a report of waste discharge (ROWD) and submitted an application for reissuance of its WDRs and NPDES permit on December 13, 2014. The application was deemed complete on February 2, 2015.

II. FACILITY DESCRIPTION

The Permittee owns and operates the Facility, a wastewater collection, treatment, and disposal facility that serves a population of approximately 4,000, including 1,000 full-time residents and many visitors and tourists to Mendocino City, Russian Gulch State Park, and Headlands State Park. The Facility is located on 10500 Kelly Street in Mendocino, Mendocino County, California.

A. Description of Wastewater and Biosolids Treatment and Controls

The Facility treats domestic and commercial wastewater and has an average dry weather design treatment capacity of 0.3 mgd and a peak daily wet weather treatment capacity of 1.0 mgd. The Facility consists of comminution, extended aeration activated sludge, secondary clarification, and tertiary filtration. Effluent is chlorinated, dechlorinated, and flows by gravity to a flow equalization pond. Influent flows in excess of the design flow can be routed to a 300,000 gallon overflow pond for storage until flows diminish, when the excess flow is routed back to the headworks for treatment. Effluent from the equalization pond is controlled at flow control structure A by sliding stop gates, from which flow continues to flow to control structure B, which has two pressure control valves to prevent backflow conditions in the outfall. From flow control structure B, effluent is discharged through a diffuser at Discharge Point 001 to the Pacific Ocean. The outfall structure is an 8-inch diameter pipe, 996 feet in length, which provides a minimum initial dilution of 100:1. Onsite storm water runoff is diverted to the plant headworks for treatment.

Solids are aerobically digested and dewatered to approximately 12 percent solids by a belt filter press, then dehydrated to approximately 90 percent solids using a sludge dryer. Condensate from the dryer is returned to the headworks for treatment. Biosolids are transported to a landfill for final disposal.

During the dry weather season (generally May through October) and other periods, as needed, tertiary treated effluent is distributed to a water recycling system at Discharge Point 002, which consists of a 55,000 gallon storage tank, accompanying appurtenances, and a pop-up sprinkler system located on the Mendocino High School athletic fields. Disinfected tertiary recycled water is pumped to the high school storage tank in a "batch" fashion, and each tank of recycled water transferred to the storage tank must be used for field irrigation before the tank is refilled from

the treatment plant. The Permittee may expand recycled water use to other uses allowed by title 22, including landscape irrigation uses and toilet flushing at public facilities in the future.

The recycled water system was previously regulated under Regional Water Board Order No. 97-66. All recycled water and use area requirements have been incorporated in this Order, Order No. R1-2015-0039, and Order No. 97-66 is rescinded by this Order.

B. Discharge Points and Receiving Waters

Treated wastewater is discharged west of the Facility at Discharge Point 001 at 39° 18' 21" N latitude and 123° 48' 30" W longitude to the Pacific Ocean via a 996 foot outfall.

During dry weather periods, disinfected tertiary effluent is transferred to the 55,000 gallon storage tank at Mendocino High School for recycled water use on the school's athletic fields. The Permittee may expand the recycled water use system in the future.

C. Summary of Existing Requirements and Self-Monitoring Report (SMR) Data

Effluent limitations contained in Order No. R1-2010-0020 for discharges from Discharge Point 001 (Monitoring Locations EFF-001, EFF-002, and EFF-003) and representative monitoring data from the term of Order No. R1-2010-0020 are as follows:

Table F-2. Historic Effluent Limitations and Monitoring Data

Parameter	Units	Effluent Limitation			Monitoring Data (July 2010 – December 2014)		
		Average Monthly	Average Weekly	Maximum Daily	Highest Average Monthly Discharge	Highest Average Weekly Discharge	Highest Daily Discharge
Biochemical Oxygen Demand 5-day @ 20°C (BOD_5)	mg/L	30	45	--	2.06	3.2	--
	lbs/day[1]	75	113	--	1.78	8.2	--
	% Removal	85	--	--	99.4[2]	--	--
Total Suspended Solids (TSS)	mg/L	30	45	--	5.5	7.1	--
	lbs/day[1]	75	113	--	4.13	5.88	--
	% Removal	85	--	--	98.5[2]	--	--
Chloroform	µg/L	13,130	--	--	59.15	--	--
	lbs/day[1]	32.9	--	--	0.03	--	--
Dichlorobromo-methane	µg/L	626	--	--	24.87	--	--
	lbs/day[1]	1.57	--	--	0.01	--	--
Oil and Grease	mg/L	25	40	75	2.2	2.2	2.2
Settleable Solids	ml/L	1.0	1.5	3.0	<0.1	<0.1	<0.1
pH	s.u.	--	--	6.0 – 9.0	--	--	6.4 – 7.5
Total Residual Chlorine	mg/L	0.20[3]	--	0.81/6.06[4]	0.5[5]	0.39[6]	--
	lbs/day[1]	0.50[3]	--	2.02/15.2[4]	0.39[5]	0.13[6]	--
Turbidity	NTU	75	100	225	1.28	3.2	1.2

Parameter	Units	Effluent Limitation			Monitoring Data (July 2010 – December 2014)		
		Average Monthly	Average Weekly	Maximum Daily	Highest Average Monthly Discharge	Highest Average Weekly Discharge	Highest Daily Discharge
Total Coliform Bacteria	MPN/ 100 mL	70[7]	--	230[8]	--	<1.8[9]	1,600
TCDD Equivalents	µg/L	3.94×10^{-7}	--	--	$<1.6 \times 10^{-7}$	--	--
	lbs/day[1]	9.86×10^{-10}	--	--	$<4 \times 10^{-11}$	--	--

Table Notes:
1. Based on average dry weather design flow of 0.3 mgd.
2. Represents the minimum observed percent removal.
3. Represents the 6 month median effluent limitation.
4. Represents the instantaneous maximum effluent limitation.
5. Represents the maximum observed instantaneous concentration.
6. Represents the maximum observed 6-month median concentration.
7. The monthly median concentration shall not exceed 70 MPN/100 mL.
8. No more than 10 percent of samples shall exceed 230 MPN/100 mL.
9. Represents the highest monthly median reported.

D. Compliance Summary

During the term of Order No. R1-2010-0020, the Permittee operated the Facility in compliance with all effluent limitations and other requirements. The Permittee experienced two sanitary sewer overflows to land in January 2015. The Permittee responded to both spills quickly and appropriately, thereby preventing discharges to surface waters.

E. Planned Changes

The Permittee has notified the Regional Water Board of plans to rebuild the sludge drying beds, and to install a new blower for the activated sludge basins and an emergency generator. The Permittee may expand the recycled water system to include other irrigation uses and possible toilet flushing at Headlands State Park. No other modifications or operational changes that will cause a material change in the volume or quality of discharges from the Facility have been identified for the term of this Order.

III. APPLICABLE PLANS, POLICIES, AND REGULATIONS

The requirements contained in this Order are based on the requirements and authorities described in this section.

A. Legal Authorities

This Order is issued pursuant to section 402 of the federal Clean Water Act (CWA) and implementing regulations adopted by the U.S. Environmental Protection Agency (U.S. EPA) and chapter 5.5, division 7 of the California Water Code (commencing with section 13370). It shall serve as a NPDES permit for point source discharges from this Facility to surface waters. This Order also serves as Waste Discharge Requirements (WDRs) pursuant to article 4, chapter 4, division 7 of the Water Code (commencing with section 13260).

B. California Environmental Quality Act (CEQA)

Under Water Code section 13389, this action to adopt an NPDES permit is exempt from the provisions of Chapter 3 of CEQA, (commencing with section 21100) of Division 13 of the Public Resources Code.

This action also involves the adoption of a water recycling requirements, which is subject to CEQA. For the portion of the permit that addresses WDRs for discharges to land, the Regional Water Board has prepared a notice of exemption that the project is categorically exempt from CEQA pursuant to section 15301 of title 14 of the CCR. Because the Regional Water Board is issuing the WDRs for discharges from an existing facility for which no expansion of design flow is being permitted, this project meets the requirements of the categorical exemption, including the requirements set forth in section 15300.2 that the project not have any significant effects or result in cumulative impacts. The existing recycled water use at Mendocino High School has been utilized by the Permittee since 1977.

If at any time the Permittee proposes to expand its recycled water system to include other use sites, the Permittee will be the lead agency under CEQA.

C. State and Federal Laws, Regulations, Policies, and Plans

1. **Water Quality Control Plan.** The Regional Water Board adopted a *Water Quality Control Plan for the North Coast Region* (hereinafter Basin Plan) that designates beneficial uses, establishes water quality objectives, and contains implementation programs and policies to achieve those objectives for all waters addressed through the plan. In addition, the Basin Plan implements State Water Board Resolution No. 88-63, which establishes state policy that all waters, with certain exceptions, should be considered suitable or potentially suitable for municipal or domestic supply. With high concentrations of total dissolved solids, ocean waters meet an exception to State Water Board Resolution No. 88-63; and therefore, the MUN designation is not applicable to the ocean receiving water for this Permittee. Beneficial uses applicable to the Pacific Ocean are summarized in Table F-3, below:

Table F-3. Basin Plan Beneficial Uses

Discharge Point	Receiving Water Name	Beneficial Use(s)
001	Pacific Ocean	Existing: Navigation (NAV); Water contact recreation (REC-1); Non-contact water recreation (REC-2); Commercial and sport fishing (COMM); Wildlife habitat (WILD); Rare, threatened, or endangered species (RARE); Marine habitat (MAR); Migration of aquatic organisms (MIGR); Spawning, reproduction, and/or early development (SPAWN); Shellfish harvesting (SHELL); and Aquaculture (AQUA). Potential: Industrial water supply (IND); Industrial process supply (PRO); and Preservation of Areas of Special Biological Significance (ASBS).

Requirements of this Order implement the Basin Plan.

2. **Thermal Plan.** The State Water Board adopted a *Water Quality Control Plan for Control of Temperature in the Coastal and Interstate Waters and Enclosed Bays and Estuaries of California* (Thermal Plan) on January 7, 1971, and amended this plan on September 18, 1975. This plan contains temperature objectives for coastal waters. The Permittee does not discharge thermal waste; therefore, the Order does not include effluent limitations for temperature in response to the requirements of the Thermal Plan.

3. **California Ocean Plan.** The State Water Board adopted the Water Quality Control Plan for Ocean Waters of California, California Ocean Plan (Ocean Plan) in 1972 and amended it in 1978, 1983, 1988, 1990, 1997, 2000, 2005, 2009, and 2012. The State Water Board adopted the latest amendment on October 16, 2012, and it became effective on August 19, 2013. The Ocean Plan is applicable, in its entirety, to point source discharges to the Pacific Ocean. In order to protect the beneficial uses, the Ocean Plan establishes water quality objectives and a program for implementation. The Ocean Plan identifies the beneficial uses of ocean waters of the state to be protected as summarized below:

Table F-4. Ocean Plan Beneficial Uses

Discharge Point	Receiving Water Name	Beneficial Use(s)
001	Pacific Ocean	Existing: Industrial water supply; Water contact and non-contact recreation, including aesthetic enjoyment; Navigation; Commercial and sport fishing; Mariculture; Preservation and enhancement of designated Areas of Special Biological Significance (ASBS); Rare and endangered species; Marine habitat; Fish migration; Fish spawning; and Shellfish harvesting.

Requirements of this Order implement the Ocean Plan.

4. **Compliance Schedules and Interim Requirements.** The State Water Board adopted Resolution No. 2008-0025 on April 15, 2008, titled *Policy for Compliance Schedules in National Pollutant Discharge Elimination System Permits*, which includes compliance schedule policies for pollutants that are not addressed by the *Policy for Implementation of Toxics Standards for Inland Surface Waters, Enclosed Bays, and Estuaries of California* (State Implementation Policy or SIP). This Policy became effective on August 27, 2008.

   This Order does not include any compliance schedules or interim effluent limitations.

5. **Antidegradation Policy.** 40 C.F.R. section 131.12 requires that the state water quality standards include an antidegradation policy consistent with the federal policy. The State Water Board established California's antidegradation policy in State Water Board Resolution No. 68-16. Resolution No. 68-16 incorporates the federal antidegradation policy where the federal policy applies under federal law. Resolution No. 68-16 requires that existing water quality be maintained unless degradation is justified based on specific findings. The Regional Water Board's Basin Plan implements, and incorporates by reference, both the state and federal antidegradation policies. The permitted discharge must be consistent with the antidegradation provision of 40 C.F.R. section 131.12 and State Water Board Resolution No. 68-16. As discussed in detail in section IV.D.2 of this Fact Sheet, the permitted discharge is consistent with the antidegradation provision of 40 C.F.R. section 131.12 and State Water Board Resolution No. 68-16.

6. **Anti-Backsliding Requirements.** Sections 402(o)(2) and 303(d)(4) of the CWA and federal regulations at 40 C.F.R. section 122.44(l) restrict backsliding in NPDES permits. These anti-backsliding provisions require that effluent limitations in a reissued permit must be as stringent as those in the previous permit, with some exceptions in which limitations may be relaxed.

7. **Endangered Species Act Requirements.** This Order does not authorize an act that results in the taking of a threatened or endangered species or any act that is now prohibited, or becomes prohibited in the future, under either the California Endangered Species Act (Fish and Game Code sections 2050 to 2097) or the Federal Endangered Species Act (16 U.S.C.A sections 1531 to 1544). This Order requires compliance with effluent limits, receiving water limits, and other requirements to protect the beneficial uses of waters of the state. The Permittee is responsible for meeting all requirements of the applicable Endangered Species Act.

D. Impaired Water Bodies on CWA 303(d) List

Section 303(d) of the federal CWA requires states to identify waterbodies that do not meet water quality standards and are not supporting their beneficial uses after implementation of technology-based effluent limitations on point sources. Each state must submit an updated list, the 303(d) List of Impaired Waterbodies, to U.S. EPA by April of each even numbered year. In addition to identifying the waterbodies that are not supporting beneficial uses, the 303(d) list also identifies the pollutant or stressor causing impairment and establishes a schedule for developing a control plan to address the impairment. The CWA requires development of a total maximum daily load (TMDL) for each 303(d) listed pollutant and water body contaminant. TMDLs establish the maximum quantity of a given pollutant that can be added to a water body from all sources without exceeding the applicable water quality standard for that pollutant and determine wasteload allocations (the portion of a TMDL allocated to existing and future point sources) and load allocations (the portion of a TMDL attributed to existing and future nonpoint sources).

On October 11, 2011, the U.S. EPA provided final approval of the 2008-2010 303(d) list of impaired water bodies prepared by the state. The Pacific Ocean, in the vicinity of the discharge, is not listed as an impaired waterbody on the 303(d) list.

E. Other Plans, Policies and Regulations

1. On May 2, 2006, the State Water Board adopted State Water Board Order No. 2006-0003-DWQ, Statewide General WDRs for Sanitary Sewer Systems and on August 6, 2013 adopted Order No. WQ 2013-0058-EXEC Amending Monitoring and Reporting Program for Statewide General Waste Discharge Requirements for Sanitary Sewer Systems. Order No. 2006-0003-DWQ requires that all public agencies that currently own or operate sanitary sewer systems apply for coverage under the General WDRs. The deadline for dischargers to apply for coverage was November 2, 2006. The Permittee applied for coverage and is subject to the requirements of Order Nos. 2006-0003-DWQ and WQ 2013-0058-EXEC and any future revisions thereto for operation of its wastewater collection system.

2. Coverage under the State Water Board Water Quality Order No. 2014-0057-DWQ, NPDES General Permit No. CAS000001, General Permit for Storm Water Discharges Associated with Industrial Activities (Industrial Storm Water General Permit) is not required based on the size of the Facility (less than 1 mgd).

3. In 1996, the State Water Board and the California Department of Health Services (now State Water Board Division of Drinking Water) set forth principles, procedures, and agreements to which the agencies committed themselves relative to the use of recycled water in California, in a document titled Memorandum of Agreement between the Department of

Health Services and the State Water Resources Control Board on the Use of Reclaimed Water (MOA). This Order is consistent with the MOA.

4. On February 3, 2009, the State Water Board adopted the Recycled Water Policy (State Water Board Resolution No. 2009-0011) for the purpose of increasing the use of recycled water from municipal wastewater sources in a manner that implements state and federal water quality laws. The Recycled Water Policy became effective on May 14, 2009. The Recycled Water Policy provides direction to the regional water boards regarding the appropriate criteria to be used in issuing permits for recycled water projects and describes permitting criteria intended to streamline and provide consistency for the permitting of the vast majority of recycled water projects. Pertinent provisions and requirements of the Policy have been incorporated into this Order to address conditions specific to the Permittee's plan to implement water recycling.

The Recycled Water Policy recognizes the fact that some groundwater basins in the state contain salts and nutrients that exceed or threaten to exceed water quality objectives in the applicable Basin Plans, and that not all Basin Plans include adequate implementation procedures for achieving or ensuring compliance with the water quality objectives for salt or nutrients. The Recycled Water Policy further recognizes that these conditions can be caused by natural soils/conditions, discharges of waste, irrigation using surface water, groundwater or recycled water, and water supply augmentation using surface or recycled water, and that regulation of recycled water alone will not address these conditions. It is the intent of the Recycled Water Policy that salts and nutrients from all sources be managed on a basin-wide or watershed-wide basis in a manner that ensures attainment of water quality objectives and protection of beneficial uses. The Recycled Water Policy finds that the appropriate way to address salt and nutrient issues is through the development of regional or subregional Salt and Nutrient Management Plans (SNMPs) rather than through imposing requirements solely on individual recycled water projects.

This Order is consistent with the requirements of the Recycled Water Policy to implement an SNMP. The Recycled Water Policy currently requires monitoring for priority pollutants annually. This Order implements this requirement through the Ocean Plan Table 1 monitoring requirement in the MRP that is required of the Permittee pursuant to the Ocean Plan.

IV. RATIONALE FOR EFFLUENT LIMITATIONS AND DISCHARGE SPECIFICATIONS

The CWA requires point source dischargers to control the amount of conventional, non-conventional, and toxic pollutants that are discharged into the waters of the United States. The control of pollutants discharged is established through effluent limitations and other requirements in NPDES permits. There are two principal bases for effluent limitations in the Code of Federal Regulations: 40 C.F.R. section 122.44(a) requires that permits include applicable technology-based limitations and standards; and 40 C.F.R. section 122.44(d) requires that permits include WQBELs to attain and maintain applicable numeric and narrative water quality criteria to protect the beneficial uses of the receiving water where a reasonable potential to exceed those criteria exist.

A. Discharge Prohibitions

1. Discharge Prohibition III.A. The discharge of any waste not disclosed by the Permittee or not within the reasonable contemplation of the Regional Water Board is prohibited.

This prohibition has been retained from Order No. R1-2010-0020 and is based on the Basin Plan and State Water Board Order No. WQO 2002-0012 regarding the petition of WDRs Order No. 01-072 for the East Bay Municipal Utility District and Bay Area Clean Water Agencies. In State Water Board Order No. WQO 2002-0012, the State Water Board found that this prohibition is acceptable in orders, but should be interpreted to apply only to constituents that are either not disclosed by the Permittee, or are not reasonably anticipated to be present in the discharge but have not been disclosed by the Permittee. It specifically does not apply to constituents in the discharge that do not have "reasonable potential" to exceed water quality objectives.

The State Water Board has stated that the only pollutants not covered by this prohibition are those which were "*disclosed to the permitting authority and…can be reasonably contemplated*." [In re the Petition of East Bay Municipal Utilities District et al., (State Water Board, 2002) Order No. WQO 2002-0012, p. 24]. In that Order, the State Water Board cited a case which held the Permittee is liable for the discharge of pollutants "*not within the reasonable contemplation of the permitting authority…<u>whether spills or otherwise</u>…*" [*Piney Run Preservation Assn. v. County Commissioners of Carroll County, Maryland* (4th Cir. 2001) 268 F. 3d 255, 268.] Thus the State Water Board authority provides that, to be permissible, the constituent discharged (1) must have been disclosed by the Permittee and (2) can be reasonably contemplated by the Regional Water Board.

Whether or not the Permittee reasonably contemplates the discharge of a constituent is not relevant. What matters is whether the Permittee disclosed the constituent to the Regional Water Board or whether the presence of the pollutant in the discharge can otherwise be reasonably contemplated by the Regional Water Board at the time of Order adoption.

2. **Discharge Prohibition III.B.** Creation of pollution, contamination, or nuisance, as defined by section 13050 of the Water Code is prohibited.

   This prohibition has been retained from Order No. R1-2010-0020 and is based on section 13050 of the Water Code and section 5411 of the California Health and Safety Code. It is a standard condition/prohibition included in NPDES permits and waste discharge requirements adopted by the Regional Water Board.

3. **Discharge Prohibition III.C.** The discharge of sludge or digester supernatant is prohibited, except as authorized under section VI.C.5.c of this Order (Sludge Disposal and Handling Requirements).

   This prohibition has been retained from Order No. R1-2010-0020 and is based on restrictions on the disposal of sewage sludge found in federal regulations [40 C.F.R. Part 503 (Biosolids), Part 527, and Part 258] and title 27 of the California Code of Regulations (CCR).

4. **Discharge Prohibition III.D.** The discharge or recycling use of untreated or partially treated waste (receiving a lower level of treatment than described in section II.A of the Fact Sheet) from anywhere within the collection, treatment, or disposal systems is prohibited, except as provided for in section IV.C. (Recycling Specifications and Requirements) and in Attachment D, Standard Provisions G (Bypass) and H (Upset).

   This prohibition has been retained from Order No. R1-2010-0020 and is based on the Basin Plan to protect the beneficial uses of the receiving water from unpermitted discharges, and the intent of the Water Code sections 13260 through 13264 relating to the discharge of

waste to waters of the state without filing for and being issued an Order. This prohibition applies to spills not related to sanitary sewer overflows (SSOs) and other unauthorized discharges of wastewater within the collection, treatment, and disposal facilities. The discharge of untreated or partially treated wastewater from the collection, treatment, or disposal facility represents an unauthorized bypass pursuant to 40 C.F.R. section 122.41(m) or an unauthorized discharge which poses a threat to human health and/or aquatic life, and therefore is explicitly prohibited by this Order.

5. **Discharge Prohibition III.E.** Any sanitary sewer overflow (SSO) that results in a discharge of untreated or partially treated wastewater to (a) waters of the state or (b) land that creates pollution, contamination, or nuisance, as defined in Water Code section 13050(m) is prohibited.

   This prohibition has been retained from Order No. R1-2010-0020 and applies to spills related to SSOs and is based on state standards, including section 13050 of the Water Code and the Basin Plan. This prohibition is consistent with the state's antidegradation policy as specified in State Water Board Resolution No. 68-16 (*Statement of Policy with Respect to Maintaining High Quality of Water in California*) in that the prohibition imposes conditions to prevent impacts to water quality, the degradation of water quality, negative effects on receiving water beneficial uses, and lessening of water quality beyond that prescribed in State Water Board or Regional Water Board plans and policies.

   This prohibition is stricter than the prohibitions stated in State Water Board Order 2006-0003-DWQ, Statewide General Waste Discharge Requirements for Sanitary Sewer Systems. Order No. 2006-0003-DWQ prohibits SSOs that result in the discharge of untreated or partially treated wastewater to waters of the United States and SSOs that cause a nuisance, compared to Prohibition III.E of this Order, which prohibits SSO discharges that create nuisance or pollution to waters of the state and land for a more complete protection of human health. This prohibition is necessary because of the prevalence of high groundwater in the North Coast Region and this Region's reliance on groundwater as a drinking water source.

6. **Discharge Prohibition III.F.** The discharge of waste to land that is not owned by the Permittee, governed by District ordinance, or under agreement to use by the Permittee, or for which the Permittee has explicitly permitted such use, is prohibited, except for use for fire suppression as provided in title 22, sections 60307(a) and 60307(b) of the CCR.

   This prohibition is newly established by this Order and is a standard Regional Water Board prohibition that is included in WDRs when there are discharges to land. Land used for the application of wastewater must be owned by the Permittee or be under the control of the Permittee by contract so that the Permittee maintains a means for ultimate disposal of treated wastewater.

7. **Discharge Prohibition III.G.** The discharge of waste at any point not described in Finding II.B of the Fact Sheet or authorized by a permit issued by the State Water Board or another Regional Water Board is prohibited.

   This prohibition is newly established in this Order and is a standard Regional Water Board prohibition that allows the Permittee to discharge waste only in accordance with WDRs. It is based on sections 301 and 402 of the federal CWA and section 13263 of the Water Code.

8. **Prohibition III.H**. The discharge of recycled, filtered wastewater to a use area other than those designated for that purpose is prohibited.

   This prohibition is retained from Order No. R1-2010-0020. A discharge of recycled wastewater other than that described in the Order as Discharge Point 002 is an unauthorized discharge and is therefore prohibited.

9. **Prohibition III.I.** The average dry weather flow through the Facility shall not exceed 0.3 mgd. Peak daily wet weather flows through the Facility shall not exceed 1.0 mgd. Compliance with this prohibition shall be determined as defined in sections VII.J and VII.K of this Order.

   The average dry weather flow prohibition is retained from Order No. R1-2010-0020 and is based on the engineering design and historic reliable treatment capacity of the Facility. The peak daily wet weather flow prohibition is newly established in this Order and is based on the engineering design treatment capacity of the Facility. Flows exceeding the design dry- and wet-weather design capacities may result in a lower achievement of compliance with water quality objectives established in the Order.

10. **Prohibition III.J.** The discharge of any radiological, chemical, or biological warfare agent or high-level radioactive waste into waters of the state is prohibited.

    This prohibition is retained from Order No. R1-2010-0020 and is based on the discharge prohibitions contained in section III.I of the Ocean Plan and section 13375 of the Water Code.

11. **Prohibition III.K.** The discharge of sludge directly into the ocean or into a waste stream that discharges to the ocean is prohibited.

    This prohibition is retained from Order No. R1-2010-0020 and is based on the Ocean Plan.

12. **Prohibition III.L.** The by-passing of untreated wastes containing concentrations of pollutants in excess of those of Ocean Plan Tables 1 2 (2012) is prohibited.

    This prohibition is newly established by this Order and is based on the discharge prohibitions contained in section III.I. of the Ocean Plan.

B. Technology-Based Effluent Limitations

1. Scope and Authority

Section 301(b) of the CWA and implementing U.S. EPA permit regulations at 40 C.F.R. section 122.44 require that permits include conditions meeting applicable technology-based requirements at a minimum, and any more stringent effluent limitations necessary to meet applicable water quality standards. The discharge authorized by this Order must meet minimum federal technology-based requirements based on Secondary Treatment Standards at 40 C.F.R. part 133 and Best Professional Judgment (BPJ) in accordance with 40 C.F.R. section 125.3.

Regulations promulgated in 40 C.F.R. section 125.3(a)(1) require technology-based effluent limitations for municipal dischargers to be placed in NPDES permits based on Secondary Treatment Standards or Equivalent to Secondary Treatment Standards.

The Federal Water Pollution Control Act Amendments of 1972 (PL 92-500) established the minimum performance requirements for POTWs [defined in section 304(d)(1)]. Section 301(b)(1)(B) of that Act requires that such treatment works must, as a minimum, meet effluent limitations based on secondary treatment as defined by the U.S. EPA Administrator.

Based on this statutory requirement, U.S. EPA developed secondary treatment regulations, which are specified in 40 C.F.R. part 133. These technology-based regulations apply to all municipal wastewater treatment plants and identify the minimum level of effluent quality attainable by secondary treatment in terms of BOD_5, TSS, and pH, as follows:

a. BOD_5 and TSS

i. The 30-day average shall not exceed 30 mg/L.

ii. The 7-day average shall not exceed 45 mg/L.

iii. The 30-day average percent removal shall not be less than 85%.

b. pH

The pH shall be maintained within the limits of 6.0 to 9.0.

The effluent limitation for pH required to meet the water quality objective for hydrogen ion concentration (pH) is contained in the Basin Plan, Table 3-1.

In addition, 40 C.F.R. section 122.45(f) requires the establishment of mass-based effluent limitations for all pollutants limited in Orders, except for 1) pH, temperature, radiation, or other pollutants which cannot be appropriately expressed by mass, and 2) when applicable standards and limitations are expressed in terms of other units of measure.

2. Applicable Technology-Based Effluent Limitations

a. Secondary Treatment Standards (BOD_5, TSS, and pH). As described above, the secondary treatment standards at 40 C.F.R. part 133 establish the minimum level of effluent quality attainable by secondary treatment in terms of BOD_5, TSS, and pH. Numeric effluent limitations for BOD_5, TSS, and pH, including the percent removal requirements for BOD_5 and TSS, are retained from Order No. R1-2010-0020 and reflect the secondary treatment standards at 40 C.F.R. part 133.

b. Ocean Plan Table 2 Effluent Limitations (Oil and Grease, TSS, Settleable Solids, Turbidity, and pH). The State Water Board, in Table 2 of the Ocean Plan, has established technology-based requirements for oil and grease, TSS, settleable solids, turbidity, and pH. Table 2 effluent limitations apply to POTWs, and also to industrial discharges for which Effluent Limitations Guidelines have not been established pursuant to Sections 301, 302, 304, or 306 of the federal CWA. Compliance with Table 2 effluent limitations shall be the minimum level of treatment acceptable under the Ocean Plan, and shall define reasonable treatment and waste control technology. The Facility is a POTW, therefore, technology-based limitations contained in Table 2 of the Ocean Plan are applicable to the Permittee.

Consistent with Order No. R1-2010-0020, this Order includes effluent limitations for oil and grease, settleable solids, turbidity, and pH based on Table 2 of the Ocean Plan. Table 2 of the Ocean Plan includes effluent limitations for oil and grease, settleable

solids, and turbidity of 75 mg/L, 3.0 ml/L, and 225 NTU, respectively, not to be exceeded at any time. Order No. R1-2010-0020 included maximum daily effluent limitations (MDELs) based on these requirements. To be consistent with the averaging period specified in Table 2 of the Ocean Plan, this Order revises these effluent limitations to instantaneous maximum effluent limitations. The percent removal requirements for TSS in the secondary treatment requirements (i.e., 85 percent) are more stringent than the percent removal requirements in Table 2 of the Ocean Plan (i.e., 75 percent); therefore, consistent with Order No. R1-2010-0020, this Order includes percent removal requirements for TSS based on the secondary treatment standards at 40 C.F.R. part 133.

c. Mass-Based Effluent Limitations. Federal regulations at 40 C.F.R. section 122.45(f) require that, except under certain conditions, all permit limits, standards, or prohibitions be expressed in terms of mass units. Among the conditions exempting the application of mass-based limitations is section 40 C.F.R. section 122.45(f)(1)(i), which states "*for pH, temperature, and radiation, or other pollutants which cannot appropriately be expressed by mass*" and 40 C.F.R. section 122.45(f)(1)(ii), which states "*when applicable standards and limitations are expressed in terms of other units of measure.*"

This Order does not include mass-based effluent for the following pollutants pursuant to the exception in 40 C.F.R, section 122.45(f)(1)(i):

i. BOD_5 and TSS, because these two parameters are expressed in terms of concentration and percent removal;

ii. Settleable solids, turbidity, and pH because these parameters cannot appropriately be expressed by mass; and

iii. Oil and grease, because the applicable standards for oil and grease in Table 2 of the Ocean Plan are expressed in terms of concentration.

Table F-5. Summary of Technology-Based Effluent Limitations

Parameter	Units	Effluent Limitations				
		Average Monthly	Average Weekly	Maximum Daily	Instantaneous Minimum	Instantaneous Maximum
Biochemical Oxygen Demand 5-day @ 20°C (BOD_5)	mg/L	30	45	--	--	--
	% Removal	85	--	--	--	--
Oil and Grease	mg/L	25	40	--	--	75
Total Suspended Solids (TSS)	mg/L	30	45	--	--	--
	% Removal	85	--	--	--	--
Settleable Solids	mL/L	1.0	1.5	--	--	3.0
Turbidity	NTU	75	100	--	--	225

Parameter	Units	Effluent Limitations				
		Average Monthly	Average Weekly	Maximum Daily	Instantaneous Minimum	Instantaneous Maximum
pH	standard units	--	--	--	6.0	9.0

C. Water Quality-Based Effluent Limitations (WQBELs)

1. Scope and Authority

CWA Section 301(b) and 40 C.F.R. section 122.44(d) require that permits include limitations more stringent than applicable federal technology-based requirements where necessary to achieve applicable water quality standards.

Section 122.44(d)(1)(i) of 40 C.F.R. requires that permits include effluent limitations for all pollutants that are or may be discharged at levels that have the reasonable potential to cause or contribute to an exceedance of a water quality standard, including numeric and narrative objectives within a standard. Where reasonable potential has been established for a pollutant, but there is no numeric criterion or objective for the pollutant, WQBELs must be established using: (1) U.S. EPA criteria guidance under CWA section 304(a), supplemented where necessary by other relevant information; (2) an indicator parameter for the pollutant of concern; or (3) a calculated numeric water quality criterion, such as a proposed state criterion or policy interpreting the state's narrative criterion, supplemented with other relevant information, as provided in section 122.44(d)(1)(vi).

The process for determining reasonable potential and calculating WQBELs when necessary is intended to protect the designated uses of the receiving water as specified in the Basin Plan and Ocean Plan, and achieve applicable water quality objectives and criteria that are contained in other state plans and policies, or any applicable water quality criteria contained in the Ocean Plan.

2. Applicable Beneficial Uses and Water Quality Criteria and Objectives

a. Beneficial Uses. Beneficial use designations for receiving waters for discharges from the Facility are presented in section III.C.1 of this Fact Sheet.

b. Ocean Plan Water Quality Objectives. Water quality criteria applicable to ocean waters of the Region are established by the Ocean Plan, which includes general provisions and water quality objectives for bacterial characteristics, physical characteristics, chemical characteristics, biological characteristics, and radioactivity. These water quality objectives from the Ocean Plan are incorporated as receiving water limitations into the Order. Table 1 of the Ocean Plan contains numeric water quality objectives for 83 toxic pollutants for the protection of marine aquatic life and human health. Pursuant to NPDES regulations at 40 C.F.R. section 122.44(d)(1), and in accordance with procedures established by the Ocean Plan, the Regional Water Board has performed an Ocean Plan reasonable potential analysis (RPA) to determine the need for effluent limitations for the Table 1 toxic pollutants.

Attachment F-1 includes a summary of RPA results for all priority toxic pollutants with water quality criteria/objectives that are applicable to the Pacific Ocean.

3. Determining the Need for WQBELs

NPDES regulations at 40 C.F.R. section 122.44 (d) require effluent limitations to control all pollutants which are or may be discharged at a level which will cause, have the reasonable potential to cause, or contribute to an excursion above any state water quality standard.

a. Ocean Plan Reasonable Potential Analysis (RPA). Procedures for performing an RPA for ocean dischargers are described in Section III.C. and Appendix VI of the Ocean Plan. In general, the procedure is a statistical method that projects an effluent data set while taking into account the averaging period of water quality objectives, the long term variability of pollutants in the effluent, limitations associated with sparse data sets, and uncertainty associated with censored data sets. The procedure assumes a lognormal distribution of the effluent data set, and compares the 95th percentile concentration at 95 percent confidence of each Table 1 pollutant, accounting for dilution, to the applicable water quality criterion. The RPA results in one of three following endpoints.

Endpoint 1 – There is "reasonable potential," and a WQBEL and monitoring are required.

Endpoint 2 – There is "no reasonable potential." WQBELs are not required, and monitoring is required at the discretion of the Regional Water Board.

Endpoint 3 – The Ocean Plan RPA is inconclusive. Existing WQBELs are retained, and monitoring is required.

The State Water Resources Control Board has developed a reasonable potential calculator, which is available at http://www.waterboards.ca.gov/plnspols/docs/oplans/rpcalc.zip. The calculator (RPcalc 2.2) was used in conducting the RPA and considers several pathways in the determination of reasonable potential.

i. First Path

If available information about the receiving water or the discharge supports a finding of reasonable potential without analysis of effluent data, the Regional Water Board may decide that WQBELs are necessary after a review of such information. Such information may include: the facility or discharge type, solids loading, lack of dilution, history of compliance problems, potential toxic effects, fish tissue data, 303(d) status of the receiving water, or the presence of threatened or endangered species or their critical habitat, or other information.

ii. Second Path

If any pollutant concentration, adjusted to account for dilution, is greater than the most stringent applicable water quality objective, there is reasonable potential for that pollutant.

iii. Third Path

If the effluent data contains three or more detected and quantified values (i.e., values that are at or above the ML), and all values in the data set are at or above the ML, a parametric RPA is conducted to project the range of possible

effluent values. The 95th percentile concentration is determined at 95 percent confidence for each pollutant, and compared to the most stringent applicable water quality objective to determine reasonable potential. A parametric analysis assumes that the range of possible effluent values is distributed log normally. If the 95th percentile value is greater than the most stringent applicable water quality objective, there is reasonable potential for that pollutant.

iv. Fourth Path

If the effluent data contains three or more detected and quantified values (i.e., values that are at or above the ML), but at least one value in the data set is less than the ML, a parametric RPA is conducted according to the following steps.

(a) If the number of censored values (those expressed as a "less than" value) account for less than 80 percent of the total number of effluent values, calculate the ML (the mean of the natural log of transformed data) and SL (the standard deviation of the natural log of transformed data) and conduct a parametric RPA, as described above for the Third Path.

(b) If the number of censored values account for 80 percent or more of the total number of effluent values, conduct a non-parametric RPA, as described below for the Fifth Path. (A non-parametric analysis becomes necessary when the effluent data is limited, and no assumptions can be made regarding its possible distribution.)

v. Fifth Path

A non-parametric RPA is conducted when the effluent data set contains less than three detected and quantified values, or when the effluent data set contains three or more detected and quantified values but the number of censored values accounts for 80 percent or more of the total number of effluent values. A non-parametric analysis is conducted by ordering the data, comparing each result to the applicable water quality objective, and accounting for ties. The sample number is reduced by one for each tie, when the dilution adjusted method detection limit (MDL) is greater than the water quality objective. If the adjusted sample number, after accounting for ties, is greater than 15, the pollutant has no reasonable potential to exceed the water quality objective. If the sample number is 15 or less, the RPA is inconclusive, monitoring is required, and any existing effluent limitations in the expiring permit are retained.

b. Reasonable Potential Determination

The RPA for the effluent was conducted using effluent monitoring data generated from one monitoring event in October 2014 for all Ocean Plan Table 1 parameters and from routine monitoring events conducted between July 2010 through December 2014 for chlorine residual, TCDD equivalents, chloroform, dichlorobromomethane, ammonia, and chronic toxicity as required by the Monitoring and Reporting Program for Order No. R1-2010-0020. Results from the RPA have been used to determine the need for effluent limitations for Table 1 parameters given in the Ocean Plan.

For the RPA conducted for this permit renewal, pollutant concentrations were adjusted to account for the calculated initial dilution of 100 parts seawater per part wastewater. The adjustment for dilution is consistent with previous orders for this Facility.

The table below identifies the RPA endpoint for each Table 1 parameter detected in the effluent and shows the analysis reached an Endpoint 3 for most of the parameters analyzed. An Endpoint 3 RPA is inconclusive and results when a majority of the effluent data is reported as ND (not detected). In these circumstances, the Regional Water Board views the "inconclusive" result as an indication of no concern for a particular pollutant; however, additional monitoring will be required for those parameters during the term of the permit.

The RPA conducted for the Facility demonstrated reasonable potential (Endpoint 1) for discharges from the Facility to cause or contribute to exceedances of applicable water quality criteria for total chlorine residual.

Order No. R1-2010-0020 established effluent limitations for TCDD-equivalents based on the numeric water quality criteria from the Ocean Plan. As shown in the table below, the RPA conducted for the Facility was inconclusive (Endpoint 3) for TCDD-equivalents. For RPA results of Endpoint 3, the Ocean Plan specifies that existing effluent limitations for the pollutant shall remain in the permit. Therefore, this Order retains the effluent limitations for TCDD-equivalents from Order No. R1-2010-0020.

The following table summarizes the RPA for each priority pollutant that was reported in detectable concentrations in the effluent. The MECs, most stringent water quality objectives (WQO), and background concentrations (B) used in the RPA are presented, along with the RPA results for each toxic pollutant analyzed. No other pollutants with applicable numeric water quality criteria from the Ocean Plan were measured above detectable concentrations or analyzed for during the monitoring events conducted by the Permittee.

The results of the RPA indicate reasonable potential for total residual chlorine for the effluent discharged through Discharge Point 001. Attachment F-1 to this Order summarizes the RPA for all constituents.

Table F-6. Summary of Reasonable Potential Analysis Results

Table B Pollutant	Most Stringent WQO (µg/L)	No. of Samples	No. of Non-Detects	Max Effluent Conc. (µg/L)[1]	RPA Results, Comment
Objectives for Protection of Marine Aquatic Life					
Arsenic	8	1	0	0.8	Endpoint 3 - RPA is inconclusive. Less than 3 detects or greater than 80% ND.
Chromium (III)	190,000	1	0	0.65	Endpoint 3 - RPA is inconclusive. Less than 3 detects or greater than 80% ND.
Copper	3.0	1	0	17	Endpoint 3 - RPA is inconclusive. Less than 3 detects or greater than 80% ND.

Table B Pollutant	Most Stringent WQO (µg/L)	No. of Samples	No. of Non-Detects	Max Effluent Conc. (µg/L)[1]	RPA Results, Comment
Lead	2	1	0	0.37	Endpoint 3 - RPA is inconclusive. Less than 3 detects or greater than 80% ND.
Mercury	0.04	1	0	0.00138	Endpoint 3 - RPA is inconclusive. Less than 3 detects or greater than 80% ND.
Nickel	5	1	0	1.1	Endpoint 3 - RPA is inconclusive. Less than 3 detects or greater than 80% ND.
Selenium	15	1	0	0.56	Endpoint 3 - RPA is inconclusive. Less than 3 detects or greater than 80% ND.
Zinc	20	1	0	63	Endpoint 3 - RPA is inconclusive. Less than 3 detects or greater than 80% ND.
Cyanide	1	1	0	4	Endpoint 3 - RPA is inconclusive. Less than 3 detects or greater than 80% ND.
Total Residual Chlorine	2	215	81	5.94	Endpoint 1 – An effluent limitation must be developed for this pollutant. Monitoring is required.
Objectives for Protection of Human Health – Noncarcinogens					
Antimony	1,200	1	0	0.24	Endpoint 3 - RPA is inconclusive. Less than 3 detects or greater than 80% ND.
Objectives for Protection of Human Health – Carcinogens					
Ammonia	600	42	8	7.86	Endpoint 2- An effluent limitation is not required for this pollutant. Monitoring may be required as appropriate.
Chloroform	130	19	0	0.99	Endpoint 2- An effluent limitation is not required for this pollutant. Monitoring may be required as appropriate.
Dibromochloro-methane	8.6	3	0	0.84	Endpoint 2- An effluent limitation is not required for this pollutant. Monitoring may be required as appropriate.
Dichlorobromo-methane	6.2	19	0	0.47	Endpoint 2- An effluent limitation is not required for this pollutant. Monitoring may be required as appropriate.

Table B Pollutant	Most Stringent WQO (µg/L)	No. of Samples	No. of Non-Detects	Max Effluent Conc. (µg/L)[1]	RPA Results, Comment
TCDD Equivalents	3.9×10^{-9}	5	5	$<9.85 \times 10^{-8}$	Endpoint 3 - RPA is inconclusive. Less than 3 detects or greater than 80% ND.
Chronic Toxicity	1 TUc	13	0	80 TUc	Endpoint 3 - RPA is inconclusive. Greater than 15 results needed to confidently conclude no reasonable potential. Monitoring required.

Table Notes:
1. Represents the expected concentration after complete mixing in accordance with the reasonable potential procedure in Appendix VI of the Ocean Plan.

c. Non-Table 1 Water Quality Objectives

i. Total Residual Chlorine. Table 1 of the Ocean Plan includes 6-month median, daily maximum, and instantaneous maximum effluent limitations of 2 µg/L, 8 µg/L, and 60 µg/L, respectively, for total residual chlorine. Based on effluent monitoring data, the discharge exhibits reasonable potential to cause or contribute to an exceedance of the water quality objectives in the Ocean Plan. Additionally, the Permittee uses chlorine to disinfect effluent, and as such effluent limitations for total residual chlorine are necessary. Consistent with Order No. R1-2010-0020, this Order includes effluent limitations for total residual chlorine in effluent discharged to the Pacific Ocean through Discharge Point 001 based on the Ocean Plan objectives.

ii. Total Coliform Bacteria. Effluent limitations for total coliform bacteria at Discharge Point 001, described below, are retained from Order No. R1-2010-0020. The Ocean Plan includes bacterial objectives for ocean waters used for water contact recreation and shellfish harvesting. For total and fecal coliform bacteria and the enterococcus group of bacteria, water contact standards must be met within a zone bounded by the shoreline and a distance of 1,000 feet from the shoreline or the 30-foot depth contour, whichever is further from the shoreline. Shellfish harvesting standards for total coliform bacteria must be maintained throughout the water column. In lieu of receiving water bacterial monitoring, the Permittee has been required to meet the most stringent water quality standards, shellfish harvesting standards, at end-of-pipe.

Regional Water Board staff has determined that there is a reasonable potential that the discharge can cause or contribute to exceedances of bacterial water quality objectives for shellfish harvesting. This determination is based on the following factors:

(a) The Ocean Plan specifies that shellfish standards shall be maintained through the water column (i.e., without dilution credit).

(b) Total coliform bacteria have been shown to be present in the discharge. For the period from July 2010 through December 2014, the maximum reported

effluent concentration of total coliform was 1,600 MPN/100 mL at Monitoring Location EFF-002.

(c) The Permittee collects effluent grab samples once per week, presenting an incomplete representation of the daily effluent quality.

(d) Receiving water monitoring data are not available for the area in the vicinity of the discharge, and

(e) Public access to offshore areas surrounding the Facility's outfall is open and unrestricted. Members of the public wishing to harvest shellfish in the area can approach by boat and collect shellfish in accordance with state regulations.

In accordance with the Ocean Plan, the disinfected effluent discharged through Discharge Point 001 shall not contain concentrations of total coliform bacteria, as measured at Monitoring Location EFF-002, exceeding the following limitations:

(a) The median concentration shall not exceed an MPN of 70 organisms per 100 mL in a calendar month.

(b) No samples shall exceed an MPN of 230/100 mL. Although the Ocean Plan specifies compliance with this objective using the results of 10 consecutive samples, this Order applies the limitation as a single sample limitation for ease of determining compliance with the limitation.

These effluent limitations can reasonably be expected to be achieved with the Facility's existing facilities and will ensure that bacterial standards for both shellfish harvesting and water contact recreation are maintained throughout the water column.

4. WQBEL Calculations

Based on results of the RPA, performed in accordance with methods of the Ocean Plan for discharges to the Pacific Ocean, the Regional Water Board is establishing WQBELs for chlorine residual and TCDD-equivalents at Discharge Point No. 001.

As described by Section III.C of the Ocean Plan, effluent limits for Table 1 pollutants are calculated according to the following equation.

$$Ce = Co + Dm\ (Co - Cs)$$

Where …

Ce = the effluent limitation (µg/L)

Co = the concentration (the water quality objective) to be met at the completion of initial dilution (µg/L)

Cs = background seawater concentration (µg/L)

Dm = minimum probable initial dilution expressed as parts seawater per part wastewater (here, Dm = 100)

For the Facility, the Dm of 100 is retained from Order No. R1-2010-0020. Initial dilution is the process that results in the rapid and irreversible turbulent mixing of wastewater with ocean water around the point of discharge. In accordance with Table 1 implementing procedures, Cs equals zero for all parameters, except the following:

Table F-7. Background Seawater Concentrations – Ocean Plan

Pollutant	Background Seawater Concentration (µg/L)
Arsenic	3
Copper	2
Mercury	0.0005
Silver	0.16
Zinc	8

Applicable water quality objectives from Table 1 of the Ocean Plan are as follows.

Table F-8. Water Quality Objectives – Ocean Plan

Pollutant	Units	6-Month Median	Daily Maximum	Instantaneous Maximum	30-Day Average
Total Residual Chlorine	µg/L	2	8	60	--
TCDD Equivalents	µg/L	--	--	--	3.9×10^{-9}

Using the equation, Ce = Co + Dm (Co – Cs), effluent limitations are calculated as follows. Here, Dm is equal to 100 for each effluent limitation calculation.

Total Residual Chlorine

Ce = 2 + 100 (2 – 0) = 202 µg/L (6-Month Median)

Ce = 8 + 100 (8 – 0) = 808 µg/L (Daily Maximum)

Ce = 60 + 100 (60 – 0) = 6,060 µg/L (Instantaneous Maximum)

TCDD Equivalents

Ce = 3.9E-09 + 100 (3.9E-09 – 0) = 3.94×10^{-7} µg/L (30-Day Average)

5. Whole Effluent Toxicity (WET)

Monitoring triggers for chronic toxicity protect the receiving water from the aggregate effect of a mixture of pollutants that may be present in effluent. There are two types of WET tests – acute and chronic. An acute toxicity test is conducted over a short time period and measures mortality. A chronic test is conducted over a longer period of time and may measure mortality, reproduction, and/or growth. The Permittee conducted annual chronic toxicity testing using *Macrocystis pyrifera, Strongylocentrotus pupuratus,* and *Atherinops affinis*. The following table summarizes the chronic toxicity testing results for 2010 through 2014.

Table F-9. Summary of Chronic Toxicity Results

Date	*Macrocystis pyrifera*		*Strongylocentrotus purpuratus*	*Atherinops affinis*	
	Germination (TUc)	Tube Length (TUc)	Reproduction (TUc)	Survival (TUc)	Growth (TUc)
October 17, 2010	80	80	80	80	80
September 20, 2011	80	80	80	80	80
September 18, 2012	--	--	80	--	--
September 24, 2013	--	--	80	--	--
September 29, 2014	--	--	80	--	--

The Ocean Plan contains toxicity testing requirements based on minimum initial dilution (Dm) factors in section III.C.4.c. Following the implementation procedures of the Ocean Plan, dischargers with Dm factors ranging from 100:1 to 350:1 are required to conduct chronic toxicity testing, and may be required to conduct acute toxicity testing. This Order allows for a Dm of 100 for the chronic condition. As shown in Table F-6 of this Fact Sheet, the analysis to determine if the discharge has reasonable potential to cause or contribute to an exceedance of the Ocean Plan objective for chronic toxicity was inconclusive due to the fact that the sample set was too small to draw a solid conclusion regarding reasonable potential. This Order does not contain WET limitations; however, in accordance with the Ocean Plan (section III.C, Implementation Provisions for Table 1), this Order establishes annual chronic toxicity monitoring requirements for the discharge at Discharge Point 001.

The Ocean Plan establishes a daily maximum chronic toxicity objective of 1.0 TUc = 100/NOEC, using a five-concentration hypothesis test, and a daily maximum acute toxicity objective of 0.3 TUa = 100/LC50, using a point estimate model. In 2010, U.S. EPA endorsed the peer-reviewed Test of Significant Toxicity (TST) two-concentration hypothesis testing approach in *National Pollutant Discharge Elimination System Test of Significant Toxicity Implementation Document* (EPA 833-R-10-003, 2010) as an improved hypothesis-testing tool to evaluate data from U.S. EPA's toxicity test methods. The TST hypothesis testing approach more reliably identifies toxicity—in relation to the chronic (0.25 or more) and acute (0.20 or more) mean responses of regulatory management concern—than the current NOEC hypothesis-testing approach used in the Ocean Plan. TST results are also more transparent than the point estimate model approach used for acute toxicity in the Ocean Plan that is not designed to address the question of statistical uncertainty around the modeled toxicity test result in relation to the effect level of concern. The TST is the superior approach for addressing statistical uncertainty when used in combination with U.S. EPA's toxicity test methods and is implemented in federal permits issued by U.S. EPA Region 9. Use of the TST approach to establish the numeric monitoring trigger is expected to be protective of the Ocean Plan's numeric toxicity objective.

In 2011, to demonstrate the advantages of the TST approach, the State Water Board conducted a "test drive" comparing results obtained using TST with results obtained using the NOEC statistical approach currently being used in California's WET program[1]. Using data from a number of sources, the analysis identified the number of tests passing or failing,

[1] State Water Resources Control Board. 2011. Whole Effluent Toxicity Test Drive Analysis of the Test of Significant Toxicity (TST). http://www.waterboards.ca.gov/water_issues/programs/state_implementation_policy/docs/tst_test_drive.pdf

the range of effects associated with passing or failing, and the within-test variability associated with these tests using the TST and the NOEC approach. A sample was declared toxic if there is greater than or equal to a 25 percent effect in a chronic test at the permitted IWC. The sample is declared non-toxic if there is less than or equal to 10percent effect at the IWC.

The results of the test drive indicate that, overall, use of the TST approach declared 2.9 percent of all tests as toxic at the IWC less than 25 percent (i.e., not truly toxic), while the NOEC analysis declared a greater number of those tests toxic, 5.3 percent. The TST analysis also declared 0.1 percent of all tests as toxic with an effect less than or equal to 10 percent (i.e., truly non-toxic) compared to 2.6 percent declared toxic by the NOEC analysis. For chronic toxicity tests using marine species, the ability for the TST approach to more consistently identify truly toxic samples as toxic and truly non-toxic samples as non-toxic is even more pronounced.

Test of Significant Toxicity Design

The TST's null hypothesis for chronic toxicity is:

H_0: Mean response (In-stream Waste Concentration (IWC) in % effluent) ≤ 0.75 mean response (control)

Results obtained from a single-concentration chronic toxicity test are analyzed using the TST approach and an acceptable level of chronic toxicity is demonstrated by rejecting the null hypothesis and reporting "Pass" or "P".

The chronic IWC (in % effluent) for Discharge Point 001 is 1%. The chronic WET trigger for Discharge Point 001 is expressed as a null hypothesis (H_0) and regulatory management decision (b value) of 0.75 for the chronic toxicity methods in the MRP. The null hypothesis for this discharge is:

H_0: Mean response (1% effluent) ≤ 0.75 mean response (control)

Results obtained from a single-concentration chronic toxicity test shall be analyzed using the TST hypothesis testing approach in the MRP. Compliance with this chronic toxicity limitation is demonstrated by rejecting the null hypothesis and reporting "Pass" or "P".

If chronic toxicity results for effluent samples exceed the trigger, the Permittee must initiate accelerated monitoring as specified in the MRP (Attachment E, section V). After accelerated monitoring, if conditions of chronic toxicity are found to persist, the Permittee will be required to conduct a Toxicity Reduction Evaluation, as described by the MRP.

Notification requirements for chronic WET testing include a 72-hour verbal notification requirement and a 14 day written report requirement, if test results indicate toxicity. The 14 day written notification is established in the U.S. EPA WET Guidance documents cited in the MRP. The 72-hour verbal notification requirement is being added to provide the Regional Water Board with knowledge of the toxicity in advance of the written report. The 72-hour requirement is intended to give the Permittee sufficient time to make a telephone call to Regional Water Board staff and accounts for non-working days (e.g., weekends). Verbal notification of WET test exceedances may be left by voice mail if the Regional Water Board staff person is not immediately available by telephone.

This Order retains the requirement for the Permittee to conduct a screening test using at least one vertebrate, invertebrate, and plant species. After the screening test is completed, monitoring can be reduced to the most sensitive species.

D. Final Effluent Limitation Considerations

1. Anti-Backsliding Requirements

Sections 402(o) and 303(d)(4) of the CWA and federal regulations at 40 C.F.R. section 122.44(l) prohibit backsliding in NPDES permits. These anti-backsliding provisions require effluent limitations in a reissued permit to be as stringent as those in the previous permit, with some exceptions where limitations may be relaxed. All effluent limitations in this Order are at least as stringent as the effluent limitations in Order No. R1-2010-0020, except for effluent limitations for chloroform and dichlorobromomethane and mass-based effluent limitations for BOD_5, TSS, chlorine residual and TCDD-equivalents.

Order No. R1-2010-0020 included effluent limitations for chloroform and dichlorobromomethane based on the Ocean Plan objectives. As shown in Table F-6 of this Fact Sheet, effluent data demonstrate that the discharge no longer demonstrates reasonable potential to cause or contribute to an exceedance of the water quality objectives. The updated effluent data for chloroform and dichlorobromomethane constitutes new information, which permits the removal of effluent limitations consistent with CWA section 402(o)(2)(B). Therefore, the Order does not retain the effluent limitations for chloroform and dichlorobromomethane.

Order No. R1-2010-0020 established final mass-based effluent limitations for chlorine residual and TCDD-equivalents. 40 C.F.R. section 122.45(f)(1)(ii) states that mass limitations are not required when applicable standards and limitations are expressed in terms of other units of measurement. The numerical effluent limitations for these pollutants established in this Order are based on the effluent limitations required by Table 1 of the Ocean Plan, which are expressed in terms of concentration. Pursuant to 40 C.F.R. section 122.45(f)(1)(ii), expressing the effluent limitations in terms of concentration is in accordance with federal regulations. Furthermore, the Ocean Plan does not require mass-based effluent limitations for Table 1 constituents.

Order No. R1-2010-0020 also established mass-based effluent limitations for BOD_5 and TSS. Historically, the Regional Water Board routinely incorporated mass-based limits (in addition to concentration-based limits) for BOD_5 and TSS in NPDES permits to encourage correction of infiltration and inflow (I&I). Applied in this way, mass-based limitations effectively restrict a POTW's wet-weather influent flows to less than or equal to the treatment facility's design capacity in situations where POTWs experience excessive I&I as a result of climate conditions and/or aging infrastructure. The application of mass-based effluent limitations for BOD_5 and TSS is not necessary to limit wet-weather inflow into the Permittee's Facility because I&I is not a significant problem and the Permittee is not in danger of exceeding treatment capacity for reasonably anticipated flows.

Mass limitations for BOD_5 and TSS for discharges of treated wastewater have been removed because Regional Water Board staff misinterpreted the exception of 40 CFR 122.45(f)(2), which states that mass limitations are not required "when applicable standards and limitations are expressed in terms of other units of measure." Since secondary treatment

standards for BOD_5 and TSS in 40 C.F.R. 133.102, on which the effluent limitations in previous permits were based, are expressed in concentration and percent removal (i.e., other units of measure). The relaxation of effluent limitations for BOD_5 and TSS in this Order is permissible under CWA section 402(o)(2)(B), because Regional Water Board staff has determined that mass-based limitations for BOD_5 and TSS were applied in the previous permits as a result of a mistaken interpretation of law when issuing those previous permits.

In addition, Regional Water Board staff previously held that anit-backsliding regulations prevented the removal of mass-based limitations for BOD_5 and TSS because they were appropriate and necessary to protect water quality and prevent water quality degradation in receiving waters. While it is conceivable that the absence of mass-based limitations for these pollutants may result in an increased pollutant loading to surface waters, recent self-monitoring reports indicate that compliance with concentration-based effluent limitations for BOD_5 and TSS effectively maintain the Permittee's mass emission rates for BOD_5 and TSS well below permitted mass-based limitations. In addition, even if there is resulting increase in pollutant loading, there is no evidence that the increase will result in degradation of water quality. Therefore, relaxation of effluent limitations for BOD_5 and TSS in this Order is also permissible under CWA section 402(o)(2)(B), based on new information available to the Regional Water Board.

2. Antidegradation Policies

This Order is consistent with applicable federal and state antidegradation policies, as it does not authorize the discharge of increased concentrations of pollutants or increased volumes of treated wastewater beyond that which was permitted to discharge in accordance with Order No. R1-2010-0020.

3. Stringency of Requirements for Individual Pollutants

This Order contains both technology-based effluent limitations and WQBELs for individual pollutants. The technology-based effluent limitations consist of restrictions on BOD_5, oil and grease, pH, settleable solids, TSS, and turbidity. Restrictions on these pollutants are discussed in section IV.B of this Fact Sheet. This Order's technology-based pollutant restrictions implement section III.B, Table 2, of the Ocean Plan and the minimum, applicable federal technology-based requirements.

WQBELs have been derived to implement water quality objectives that protect beneficial uses. Both the beneficial uses and the water quality objectives have been approved pursuant to federal law and are the applicable federal water quality standards. Most beneficial uses and water quality objectives contained in the Basin Plan were approved under state law and submitted to and approved by U.S. EPA prior to May 30, 2000. Any water quality objectives and beneficial uses submitted to U.S. EPA prior to May 30, 2000, but not approved by U.S. EPA before that date, are nonetheless "*applicable water quality standards for purposes of the CWA*" pursuant to 40 C.F.R. section 131.21(c)(1). Collectively, this Order's restrictions on individual pollutants are no more stringent than required to implement the requirements of the CWA.

The Regional Water Board has considered the factors in Water Code section 13263, including the provisions of Water Code section 13241, in establishing these requirements.

Table F-10 summarizes all final effluent limitations included in the Order and the basis for their inclusion.

Table F-10. Summary of Final Effluent Limitations

Parameter	Units	Effluent Limitations for Ocean Discharge						Basis[1]
		Average Monthly	Average Weekly	Maximum Daily	Instantaneous Minimum	Instantaneous Maximum	6-Month Median	
Biochemical Oxygen Demand 5-day @ 20°C (BOD_5)	mg/L	30	45	--	--	--	--	CFR
	% Removal	85	--	--	--	--	--	
Oil and Grease	mg/L	25	40	--	--	75	--	OP
Total Suspended Solids (TSS)	mg/L	30	45	--	--	--	--	CFR
	% Removal	85	--	--	--	--	--	
Settleable Solids	mL/L	1.0	1.5	--	--	3.0	--	OP
Turbidity	NTU	75	100	--	--	225	--	OP
pH	s.u.	--	--	--	6.0	9.0	--	CFR, OP
TCDD Equivalents	µg/L	3.94×10^{-7}	--	--	--	--	--	OP
Total Coliform Bacteria	MPN/ 100 mL	70[2]	--	--	--	230[3]	--	OP
Total Residual Chlorine	mg/L	--	--	0.81	--	6.06	0.20	OP

Table Notes:
1. Definitions of acronyms in Table F-10:
   CFR 40 C.F.R. part 133
   OP Ocean Plan
2. The median value of total coliform bacteria shall not exceed a Most Probable Number (MPN) of 70 per 100 milliliters (mL), in a calendar month.
3. No samples shall exceed 230/100 mL.

E. Interim Effluent Limitations – Not Applicable

F. Land Discharge Specifications – Not Applicable

G. Recycling Specifications

This Order authorizes the Permittee to reuse treated municipal wastewater that complies with Water Recycling Specifications and Requirements contained in section IV.C of the Order for uses that have been addressed in an approved title 22 Engineering Report.

Water recycling at the Mendocino High School athletic fields began in 1977 and was previously regulated under Water Reclamation Requirements Order Nos. 77-100 and 97-66, issued jointly to the Permittee and the Mendocino Unified School District on August 27, 1997. In consultation with

the California Department of Health Services (now State Water Board, Division of Drinking Water (DDW)), the Regional Water Board established in WRR Order No. 97-66 prohibitions, limitations, and requirements to comply with regulations for water recycling contained in title 22, division 4, chapter 3 of the CCR. Those limitations and requirements were updated and included in the previous WDR, Order No. R1-2010-0020, while use area requirements were contained in Order No. 97-66. Compliance with effluent limitations in WDR Order No. R1-2010-0020 for BOD_5, TSS, total coliform organisms, nitrate, pH, and turbidity has been achieved through analyses of representative samples of effluent produced by the Facility for use as recycled water. The effluent limitation requiring a minimum CT[2] value has been met by calculation, using the product of chlorine residual and the minimum contact time within the storage tank, prior to irrigating the athletic fields at the Mendocino High School.

This Order retains effluent limitations for water recycling from Order No. R1-2010-0020 and includes expanded use area requirements for water recycling as required by title 22, article 4, section 60310.

1. Scope and Authority

Section 13263 of the Water Code requires the Regional Water Board to prescribe requirements for proposed discharges, existing discharges, or material change in an existing discharge based upon the conditions of the disposal area or receiving waters upon or into which the discharge is made or proposed. The prescribed requirements shall implement any relevant water quality control plans that have been adopted, and shall take into consideration the beneficial uses to be protected, the water quality objectives reasonably required for that purpose, other waste discharges, the need to prevent nuisance, and the provisions of Water Code section 13241. In prescribing requirements, the Regional Water Board is not obligated to authorize the full waste assimilation capacities of the receiving water.

Here, the Regional Water Board considered all of these factors when developing the waste discharge requirements for the recycled water discharge. Limitations for BOD_5, TSS, and pH were scientifically derived to implement water quality objectives that protect beneficial uses. Both beneficial uses and the water quality objectives have been approved pursuant to state law. In addition, discharge prohibitions were included to prohibit the recycled water use of untreated or partially treated waste, in order to protect public health and prevent nuisance. In addition, the Regional Water Board considered the factors set forth in Water Code section 13241, including the consideration of past, present, and probable future beneficial uses of the receiving water, which the Regional Water Board anticipates to be the same as set forth in the Basin Plan. The Regional Water Board considered the environmental characteristics, including water quality of the Pacific Ocean, the coordinated control of all factors which affect water quality in the area, and the need to develop and use recycled water, which this Order supports.

Effluent monitoring requirements were retained for nitrate and added for ammonia, nitrite, total organic nitrogen, and salts due to the need to assess nitrogen and salt application rates

[2] The CT value is the product of total chlorine residual and modal contact time measured at the same period. The modal contact time is the amount of time that elapsed between that time that a tracer, such as salt or dye, is injected into the influent at the entrance of the chlorination chamber and the time that the highest concentration of the tracer is observed in the effluent from the chamber.

for recycled water. The monitoring and reporting program allows for a potential reduction of these monitoring requirements if monitoring demonstrates no reasonable potential.

2. Applicable Beneficial Uses and Water Quality Criteria and Objectives

a. Beneficial Uses. Beneficial use designations for groundwater established in the Basin Plan include MUN, AGR, IND, and PRO.

b. Basin Plan Water Quality Objectives. The Basin Plan contains narrative objectives for taste and odor, bacteria, radioactivity, and chemical constituents (including those chemicals that adversely affect agricultural water supply) that apply to groundwater.

3. Determining the Need for Requirements for Water Recycling

Section IV.C of this Order contains Water Recycling Specifications and Requirements to ensure that recycled water is used in a manner that is protective of groundwater and surface water quality. These specifications and requirements are established to conform to requirements contained in title 22, division 4, chapter 3 of the CCR for recycled water use of disinfected tertiary recycled water. The Permittee is required to comply with applicable state and local requirements regarding the production and use of recycled wastewater, including requirements of Water Code sections 13500 – 13577 (Water Recycling) and DDW regulations at title 22, sections 60301 – 60357 of the CCR (Water Recycling Criteria).

A key to reducing the potential for spills is for the Permittee to establish and implement appropriate BMPs to protect against the possibility of recycled water spills. Section VI.C.2.e of the Order requires the Permittee to develop BMPs for the management of the recycled water system in order to reduce the potential for recycled water spills and runoff when implemented properly.

The Recycling Specifications and Requirements are established in this Order to conform to requirements contained in the CCR, title 22, division 4, chapter 3 for the recycled water use of disinfected tertiary effluent. Specific water recycling requirements are enumerated in Order section IV.C, Recycling Specifications and Requirements to this Order. The requirement to comply with title 22 requirements is retained from Order No. R1-2010-0020.

a. BOD_5, pH, TSS, and Nitrate. Effluent limitations for BOD_5 and TSS included in this Order are consistent with tertiary standards for oxidized and filtered wastewater and are necessary to meet standards for disinfected tertiary recycled water as defined at , title 22, section 60301.230 of the CCR for the use of recycled water used as irrigation water on parks and playgrounds and schoolyards. Effluent limitations for pH included in this Order are retained from Order R1-2010-0020 and reflect the effluent quality attainable by the Facility. The effluent limitation for nitrate is retained in this Order based on the title 22 primary MCL and is necessary to ensure protection of groundwater.

Table F-11. Summary of Recycling Discharge Specifications

Parameter	Units	Discharge Specifications			Basis[1]
		Average Monthly	Average Weekly	Maximum Daily	
Biochemical Oxygen Demand 5-day @ 20°C (BOD_5)	mg/L	10	15	20	PO and BPJ
Total Suspended Solids (TSS)	mg/L	10	15	20	PO and BPJ
Nitrate, Total (as N)	mg/L	10	--	--	MCL
pH	s.u.	6.0 – 9.0			PO and BPJ

Table Notes:
1. Definitions of acronyms in Table F-11:
   PO Previous Order
   BPJ Best Professional Judgment
   MCL Title 22 Maximum Contaminant Level

b. Disinfection and Filtration Specifications. Title 22, section 60304 of the CCR also requires that recycled water used as irrigation water on parks and playgrounds and schoolyards meet disinfection and filtration effluent limitations associated with the disinfected tertiary recycled water standard. The title 22 median concentration effluent limitation for total coliform bacteria is a rolling 7-day median. The water recycling criteria for disinfection and filtration contained, respectively, in section 60301.230 and section 60301.320 are:

i. Disinfected tertiary recycled water shall be filtered and subsequently disinfected wastewater that has been disinfected by a chlorine disinfection process following filtration that provides a CT (the product of total chlorine residual and modal contact time measure at the same point) value of not less than 450 mg-minutes per liter at all times with a modal contact time of at least 90 minutes, based on peak dry weather design flow; and

The median concentration of total coliform bacteria measured in the disinfected effluent shall not exceed an MPN of 2.2 per 100 mL utilizing the bacteriological results of the last 7 days for which analyses have been completed and the number of total coliform bacteria does not exceed an MPN of 23 per 100 mL in more than one sample in any 30 day period. No sample shall exceed an MPN of 240 total coliform bacteria per 100 mL.

ii. Filtered wastewater shall be oxidized wastewater that has been coagulated and passed through filter media at a rate that does not exceed 5 gallons per minute per square foot of surface area in mono, dual, or mixed medial gravity, upflow, or pressure filtration systems; and the turbidity shall not exceed an average of 2 NTU within a 24-hour period; 5 NTU more than 5 percent of the time within a 24-hour period; and 10 NTU at any time.

V. RATIONALE FOR RECEIVING WATER LIMITATIONS

A. Surface Water

CWA section 303(a-c) requires states to adopt water quality standards, including criteria where they are necessary to protect beneficial uses. The State Water Board adopted water quality criteria as water quality objectives in the Ocean Plan. Receiving water limitations within this Order reflect all applicable, general water quality objectives of the Ocean Plan.

The Ocean Plan includes numeric and narrative water quality objectives for various beneficial uses. This Order contains receiving water limitations for discharges to the Pacific Ocean based on the Ocean Plan numerical and narrative water quality objectives for bacteria, dissolved oxygen, floating particulates, oil and grease, pH, discoloration, natural lighting, deposition of solids, dissolved sulfides, organic materials in sediments, Table 1 parameters, nutrient materials, radioactive wastes, and biological characteristics.

B. Groundwater

1. The beneficial uses of the underlying ground water are municipal and domestic supply, industrial service supply, industrial process supply, agricultural supply, and freshwater replenishment to surface waters.

2. Groundwater limitations are required to protect the beneficial uses of the underlying groundwater.

3. Discharges from the Facility shall not cause exceedance of applicable water quality objectives or create adverse impacts to beneficial uses of groundwater.

4. The Basin Plan requires that waters designated for use as MUN shall not contain concentrations of chemical constituents in excess of the limits specified in CCR, title 22, division 4, chapter 15, article 4.1, section 64435, and article 5.5, section 64444, and listed in Table 3-2 of the Basin Plan.

VI. RATIONALE FOR PROVISIONS

A. Standard Provisions

1. Federal Standard Provisions

Standard Provisions, which apply to all NPDES permits in accordance with 40 C.F.R. section 122.41, and additional conditions applicable to specified categories of permits in accordance with 40 C.F.R. section 122.42, are provided in Attachment D to the Order. The Permittee must comply with all standard provisions and with those additional conditions that are applicable under 40 C.F.R. section 122.42. The rationale for the special conditions contained in the Order is provided in section VI.B, below.

Sections 122.41(a)(1) and (b) through (n) of 40 C.F.R. establish conditions that apply to all state-issued NPDES permits. These conditions must be incorporated into the permits either expressly or by reference. If incorporated by reference, a specific citation to the regulations must be included in the Order. Section 123.25(a)(12) allows the state to omit or modify conditions to impose more stringent requirements. In accordance with 40 C.F.R. section 123.25, this Order omits federal conditions that address enforcement authority specified in 40 C.F.R. sections 122.41(j)(5) and (k)(2) because the enforcement authority under the

Water Code is more stringent. In lieu of these conditions, this Order incorporates by reference Water Code section 13387(e).

2. Regional Water Board Standard Provisions

In addition to the Federal Standard Provisions (Attachment D), the Permittee shall comply with the Regional Water Board Standard Provisions provided in Standard Provisions VI.A.2 of the Order.

a. Order Provision VI.A.2.a identifies the state's enforcement authority under the Water Code, which is more stringent than the enforcement authority specified in the federal regulations (e.g., 40 C.F.R. sections 122.41(j)(5) and (k)(2)).

b. Order Provision VI.A.2.b requires the Permittee to notify Regional Water Board staff, orally and in writing, in the event that the Permittee does not comply or will be unable to comply with any Order requirement. This provision requires the Permittee to make direct contact with a Regional Water Board staff person.

B. Special Provisions

1. Reopener Provisions

a. Standard Revisions (Special Provision VI.C.1.a). Conditions that necessitate a major modification of a permit are described in 40 C.F.R. section 122.62, which include the following:

i. When standards or regulations on which the permit was based have been changed by promulgation of amended standards or regulations or by judicial decision. Therefore, if revisions of applicable water quality standards are promulgated or approved pursuant to Section 303 of the CWA or amendments thereto, the Regional Water Board will revise and modify this Order in accordance with such revised standards.

ii. When new information that was not available at the time of permit issuance would have justified different permit conditions at the time of issuance.

b. Reasonable Potential (Special Provision VI.C.1.b). This provision allows the Regional Water Board to modify, or revoke and reissue, this Order if present or future investigations demonstrate that the Permittee governed by this Permit is causing or contributing to excursions above any applicable priority pollutant criterion or objective, or adversely impacting water quality and/or the beneficial uses of receiving waters.

c. Whole Effluent Toxicity (Special Provision VI.C.1.c). This Order requires the Permittee to investigate the causes of, and identify corrective actions to reduce or eliminate effluent toxicity through a TRE. This Order may be reopened to include a numeric acute and/or chronic toxicity limitation, and/or a limitation for a specific toxicant identified in the TRE.

d. 303(d)-Listed Pollutants (Special Provision VI.C.1.d). This provision allows the Regional Water Board to reopen this Order to modify existing effluent limitations or add effluent limitations for pollutants that are the subject of any future TMDL action.

e. **Salt and Nutrient Management Plans (SNMPs) (Special Provision VI.C.1.e).** This provision allows the Regional Water Board to reopen this Order if it adopts a regional or subregional SNMP that is applicable to the Permittee.

f. **Title 22 Engineering Report (Special Provision VI.C.1.f).** This provision allows the Regional Water Board to reopen this Order to adequately implement title 22, if future modifications to the Permittee's title 22 engineering report occur.

2. **Special Studies and Additional Monitoring Requirements**

a. **Toxicity Reduction Requirements (Special Provision VI.C.2.a).** In addition to routine chronic toxicity monitoring, this Order requires the Permittee to maintain and update, when necessary, a TRE Work Plan, in accordance with appropriate U.S. EPA guidance, to ensure that the Permittee has a plan to immediately move forward with the initial tiers of a TRE in the event effluent toxicity is encountered in the future. The TRE is initiated by evidence of a pattern of toxicity demonstrated through the additional effluent monitoring provided as a result of an accelerated monitoring program.

b. **Recycled Water Irrigation Operation and Management Plan (Special Provision VI.C.2.b).** This plan is necessary to ensure that the recycled water irrigation system is operated at appropriate hydraulic and nutrient agronomic rates, utilizing BMPs and operations practices that are appropriate.

3. **Best Management Practices and Pollution Prevention**

a. **Pollutant Minimization Program (Special Provision VI.C.3.a).** This provision is included in this Order pursuant to section III.C.9 of the Ocean Plan. The Regional Water Board includes standard provisions in all NPDES permits requiring development of a Pollutant Minimization Program when there is evidence that a toxic pollutant is present in the effluent at a concentration greater than an applicable effluent limitation.

4. **Construction, Operation, and Maintenance Specifications**

a. **Operation and Maintenance (Special Provisions VI.C.4).** 40 C.F.R. section 122.41(e) requires proper operation and maintenance of permitted wastewater systems and related facilities to achieve compliance with permit conditions. An up-to-date operation and maintenance manual, as required by Provision VI.C.4.b of this Order, is an integral part of a well-operated and maintained facility.

5. **Special Provisions for Municipal Facilities (POTWs Only)**

a. **Wastewater Collection Systems (Special Provision VI.C.5.a)**

i. **Statewide General WDRs for Sanitary Sewer Systems.** On May 2, 2006, the State Water Board adopted General Waste Discharge Requirements for Sanitary Sewer Systems, Water Quality Order No. 2006-0003-DWQ (General Order). The General Order requires public agencies that own or operate sanitary sewer systems with greater than 1 mile of pipes or sewer lines to enroll for coverage under the General Order. The General Order requires agencies to develop sanitary sewer management plans (SSMPs) and report all SSOs, among other requirements and prohibitions. The Permittee has enrolled under the General Order as required.

On February 20, 2008, the State Water Board adopted Order No. WQ 2008-0002-EXEC Adopting Amended Monitoring and Reporting Requirements for Statewide General Waste Discharge Requirements for Statewide General Waste Discharge Requirements for Sanitary Sewer Systems, to ensure adequate and timely notifications are made to the Regional Water Board and appropriate local, state, and federal authorities in case of sewage spills. On August 6, 2013, the State Water Board adopted Order No. WQ 2013-0058-EXEC Amending Monitoring and Reporting Program for Statewide General Waste Discharge Requirements for Sanitary Sewer Systems. Order No. WQ 2013-0058-EXEC addressing compliance and enforceability of the Monitoring and Reporting Program and superseding the amendments in Order No. WQ-2008-0002-EXEC. Notification and reporting of SSOs is conducted in accordance with the requirements of Order Nos. 2006-0003-DWQ and WQ 2013-0058-EXEC, and any revisions thereto for operation of its wastewater collection system.

b. Source Control and Pretreatment Provisions (Special Provision VI.C.5.b). Pursuant to Special Provision VI.C.5.b.i, the Permittee shall implement the necessary legal authorities to monitor and enforce source control standards, restrict discharges of toxic materials to the collection system, and inspect facilities connected to the system.

40 C.F.R. section 403.8(a) requires POTWs with a total design flow greater than 5 mgd and receiving pollutants which pass through or interfere with the operation of the POTW to establish a POTW Pretreatment Program. The Regional Water Board may also require that a POTW with a design flow of 5 mgd or less develop a POTW Pretreatment Program if the nature or volume of the industrial influent, treatment process upsets, violations of POTW effluent limitations, contamination of municipal sludge, or other circumstances warrant in order to prevent interference or pass through. The Permittee reports that there are no known industrial wastes subject to regulation under the NPDES Pretreatment Program being discharged to the Facility and the average dry weather design flow of the Facility is less than 5 mgd; therefore, the Order does not require the Permittee to develop a pretreatment program that conforms to federal regulations. However, in order to prevent interference with the POTW or pass through of pollutants to the receiving water, the Order requires the Permittee to implement a source control program. If at any time, an industrial waste survey or monitoring data indicate that a pretreatment program is necessary, pursuant to 40 C.F.R. section 403.8(3), the Regional Water Board may reopen this permit to require the Permittee to develop a pretreatment program.

Water Code section 13263.3(d)(1) allows the Regional Water Board to require a discharger to complete and implement a pollution prevention plan if pollution prevention is necessary to achieve a water quality objective, to include, pursuant to Water Code section 13263.3(d)(3), an analysis of the methods that could be used to prevent the discharge of the pollutants into the POTW. These methods can include application of local limits to industrial or commercial dischargers, pollution prevention techniques, public education and outreach, or other innovative and alternative approaches to reduce discharges of pollutants to the POTW. The analysis also shall identify sources, or potential sources, not within the ability or authority of the POTW to control, such as pollutants in the potable water supply, airborne pollutants,

pharmaceuticals, or pesticides, and estimate the magnitude of those sources, to the extent feasible. This Order includes requirements for the Permittee to implement a source identification and reduction program.

A key component of an effective source control program is the identification and location of possible industrial users within the POTW's wastewater collection system. This information is typically obtained by the POTW through industrial waste surveys. The following types of resources can be consulted in compiling a master list of industrial users:

i. Water and sewer billing records

ii. Applications for sewer service

iii. Local telephone directories

iv. Chamber of Commerce and local business directories

v. Business license records

vi. POTW and wastewater collection personnel and field observations

vii. Business associations

viii. The internet

ix. Industrial and non-residential sewer use permit records

In addition, the Regional Water Board recognizes that some form of source control is prudent to ensure the efficient operation of the Facility, the safety of Facility staff, and to ensure that pollutants do not pass through the treatment Facility to impair the beneficial uses of the receiving water. The proposed Order includes prohibitions for the discharge of pollutants that may interfere, pass through, or be incompatible with treatment operations, interfere with the use of disposal of sludge, or pose a health hazard to personnel.

c. **Sludge Disposal and Handling Requirements (Special Provision VI.C.5.c).** The disposal or reuse of wastewater treatment screenings, sludges, or other solids removed from the liquid waste stream is regulated by 40 C.F.R. parts 257, 258, 501, and 503, and the State Water Board promulgated provisions of title 27 of the CCR. dried sludge generated at the Facility is currently hauled off-site to the Redwood Landfill in Novato.

This provision also requires the Permittee to comply with the state's regulations relating to the discharge of biosolids to the land. The discharge of biosolids through land application is not currently regulated under this Order. The Permittee is required to either submit a report of waste discharge or dispose of biosolids at another permitted facility.

d. **Operator Certification (Special Provision VI.C.5.d).** This provision requires the Facility to be operated by supervisors and operators who are certified as required by title 23, section 3680 of the CCR.

e. **Adequate Capacity (Special Provision VI.C.5.e).** The goal of this provision is to ensure appropriate and timely planning by the Permittee to ensure adequate capacity for the protection of public health and water quality.

6. Other Special Provisions

a. **Storm Water (Special Provision VI.C.6.a).** This provision requires the Permittee, if applicable, to obtain coverage under the State Water Board's Water Quality Order No. 2014-0057-DWQ, NPDES General Permit No. CAS000001, General Permit for Storm Water Discharges Associated with Industrial Activities (or subsequent renewed versions of the NPDES General Permit CAS000001). Currently, the Facility is exempted from these requirements based on a design flow of less than 1.0 mgd.

7. Compliance Schedules – Not Applicable

VII. RATIONALE FOR MONITORING AND REPORTING REQUIREMENTS

Section 122.48 of 40 C.F.R. requires that all NPDES permits specify requirements for recording and reporting monitoring results. Water Code section 13383 authorizes the Regional Water Board to require technical and monitoring reports. The MRP, Attachment E, establishes monitoring and reporting requirements that implement federal and state requirements. The following provides the rationale for the monitoring and reporting requirements contained in the MRP for this Facility.

A. Influent Monitoring

1. Influent monitoring requirements for flow, BOD_5 and TSS are retained from Order No. R1-2010-0020 and are necessary to determine compliance with the Order's 85 percent removal requirement for these parameters. The monitoring frequency has been reduced from weekly to monthly due to the fact that influent concentrations are relatively constant within any given month. The requirement to measure and report daily average flow and monthly average flow is necessary to determine compliance with Prohibition III.I.

B. Effluent Monitoring

1. Effluent monitoring requirements are necessary to determine compliance with prohibitions and/or effluent limitations established by the Order. Monitoring at Monitoring Locations EFF-001, EFF-002, and EFF-003 is necessary to demonstrate compliance with effluent limitations and demonstrate whether or not the discharge poses reasonable potential for a pollutant to exceed any numeric or narrative water quality objectives.

a. **Monitoring Location EFF-001.** Effluent monitoring frequencies and sample types for BOD_5, TSS, oil and grease, settleable solids, and turbidity have been retained from Order No. R1-2010-0020.

b. **Monitoring Location EFF-002.** Effluent monitoring frequencies for total coliform bacteria and pH have been retained from Order No. R1-2010-0020.

c. **Monitoring Location EFF-003.** Effluent monitoring frequencies for chlorine residual, and ammonia have been retained from Order No. R1-2010-0020.

i. Effluent monitoring data indicates that the discharge does not exhibit reasonable potential to cause or contribute to an exceedance of the Ocean Plan water quality objectives for chloroform and dichlorobromomethane . Therefore, this Order

discontinues effluent monitoring requirements for chloroform and dichlorobromomethane from Order No. R1-2010-0020.

ii. Effluent monitoring requirements for flow have been established in order to characterize the effluent.

iii. Consistent with Order No. R1-2010-0020, effluent monitoring requirements for the Ocean Plan Table 1 pollutants is required once per permit term to generate adequate data to perform an RPA.

C. Whole Effluent Toxicity Testing Requirements

Whole effluent toxicity (WET) monitoring requirements are established for discharges to the Pacific Ocean from Discharge Point 001 at Monitoring Location EFF-003 and are included in the Order to protect the receiving water quality from the aggregate effect of a mixture of pollutants in the effluent. Acute toxicity testing measures mortality in 100 percent effluent over a short test period and chronic toxicity testing is conducted over a longer time period and may measure mortality, reproduction, and/or growth. The Ocean Plan (section III.C.4.c.(3)) requires chronic testing where the minimum initial dilution of the effluent ranges from 100:1 to 350:1. Because this Order allows for a Dm of 100 for the Facility, WET monitoring shall consist of chronic toxicity testing. This Order includes monitoring requirements for chronic toxicity to assess whether there is reasonable potential to exceed the Ocean Plan's narrative water quality objectives for toxicity.

D. Recycling Monitoring Requirements

This Order requires that the Permittee comply with applicable state and local requirements regarding the production and use of recycled wastewater. Recycled water monitoring requirements for total chlorine residual, contact time, CT value, and nitrate have been retained from Order No. R1-2010-0020.

Section 13523.1(b)(4) of the Water Code requires quarterly recycled water reporting. Section X.D.3.a.i of the MRP requires quarterly recycled water reporting.

The Order includes several new recycled water monitoring requirements including:

1. When discharging recycled water to the recycled water system, the Permittee must monitor its treated effluent for BOD_5, TSS, total coliform organisms, pH, and total residual chlorine to demonstrate compliance with water recycling specifications in section IV.C.1 of the Order. Order No. R1-2010-0020, monitoring for BOD_5 and TSS was specified at Monitoring Location EFF-001 located at the effluent wet well and monitoring for total coliform organisms and pH was specified at Monitoring Location EFF-002 located at the chlorine contact chamber. In order to discern the effluent quality of discharges to the recycled water system, this Order specifies monitoring for these parameters to be reported at Monitoring Location REC-001; however, the Permittee may continue to sample for these parameters at the current locations in the effluent wet well and chlorine contact chamber, as appropriate.

2. Monitoring requirements have been added for nitrite, ammonia, and organic nitrogen because it is necessary to determine the total nitrogen concentration of the effluent in order to ensure application of recycled water at nutrient agronomic rates. Monitoring is required two times during the 2016 recycled water irrigation season.

3. Monitoring requirements for total dissolved solids, chloride, boron, and sodium have been added to determine whether any of these constituents are present in the effluent at concentrations that may exceed water quality objectives for these constituents to address concerns of the statewide Recycled Water Policy. TDS is a direct measure of salinity, which can affect underlying groundwater quality as it relates to drinking water and agricultural supply beneficial uses. Secondary MCLs for taste and odor in drinking water have been established by DDW for TDS (500 mg/L), chloride (250 mg/L) and sodium (60 mg/L). Agricultural water quality thresholds for TDS (450 mg/L) and boron (0.7 mg/L) have been established by the Food and Agriculture Organization of the United Nations. Monitoring is required two times during the 2016 recycled water irrigation season.

4. Visual monitoring of recycled water use sites. The purpose of visual monitoring is to identify any indicators, such as surface runoff, ponding, broken sprinkler heads, or sprinklers operating when the ground is saturated, that could result in a violation of permit conditions and to implement any needed corrective measures.

E. Receiving Water Monitoring – Not Applicable

F. Other Monitoring Requirements

1. **Monitoring Locations INT-001 and EFF-002.** Monitoring of the surface loading rate and effluent turbidity of the tertiary filters is required to demonstrate compliance with sections 60301.230 and 60301.320 of title 22 CCR requirements for filtered and disinfected tertiary recycled water.

2. **Outfall Inspection.** Consistent with Order No. R1-2010-0020, this Order requires the Permittee to inspect the outfall location to determine the structural integrity and operational status of the outfall structure at least once during the term of the permit. This requirement is required to demonstrate proper operation and maintenance of the POTW as required by 40 C.F.R. section 122.4, and to ensure that the calculated minimum probable initial dilution is not compromised as a result of unanticipated structural or operational changes in the outfall structure.

3. **Biological Survey.** Consistent with Order No. R1-2010-0020, this Order requires the Permittee to perform a biological survey of the outfall location once every 5 years.

G. Reporting Requirements.

The reporting frequency has been changed from monthly to quarterly for routine influent, effluent, and recycled water monitoring. The Permittee is still required to perform monitoring each month, but will submit reports quarterly. The reduced reporting frequency is intended to improve reporting efficiency. Although Regional Water Board staff will receive monitoring reports less frequently, the Order retains the requirement for the Permittee to notify Regional Water Board staff within 24-hours any non-compliance issues that may result in a significant threat to human health or the environment.

VIII. PUBLIC PARTICIPATION

The California Regional Water Quality Control Board, North Coast Region (Regional Water Board) has considered the issuance of waste discharge requirements (WDRs) that will serve as a National Pollutant Discharge Elimination System (NPDES) permit for the Mendocino City Community Services District Wastewater Treatment Facility. As a step in the WDR adoption process, the Regional Water

Board staff has developed tentative WDRs and has encouraged public participation in the WDR adoption process.

A. Notification of Interested Parties

The Regional Water Board notified the Permittee and interested agencies and persons of its intent to prescribe waste discharge requirements for the discharge and provided an opportunity to submit written comments and recommendations. Notification was provided through the following posting on the Regional Water Board's Internet site at: http://www.waterboards.ca.gov/northcoast/public_notices/public_hearings/npdes_permits_and_wdrs.shtml and through publication in the Press Democrat on May 29, 2015.

B. Written Comments

Interested persons were invited to submit written comments concerning these tentative WDRs as provided through the notification process. Comments were due to the Regional Water Board Executive Office electronically via e-mail to NorthCoast@waterboards.ca.gov or on disk (CD or DVD) in Portable Document Format (PDF) file in lieu of paper-sourced documents. The guidelines for electronic submittal of documents can be found on the Regional Water Board website at http://www.waterboards.ca.gov/northcoast .

To be fully responded to by staff and considered by the Regional Water Board, the written comments were due at the Regional Water Board office by 5:00 p.m. on **June 29, 2015**.

C. Public Hearing

The Regional Water Board held a public hearing on the draft WDRs during its regular Board meeting on the following date and time and at the following location:

Date:	August 13, 2015
Time:	8:30 a.m. or as announced in the Regional Water Board's agenda
Location:	Regional Water Board Hearing Room 5550 Skylane Boulevard, Suite A Santa Rosa, CA 95403

Interested persons were invited to attend. At the public hearing, the Regional Water Board heard testimony pertinent to the discharge, WDRs, and permit. For accuracy of the record, important testimony was requested in writing.

Please be aware that dates and venues may change. Our Web address is http://www.waterboards.ca.gov/northcoast where you can access the current agenda for changes in dates and locations.

D. Waste Discharge Requirements Petitions

Any aggrieved person may petition the State Water Board to review the decision of the Regional Water Board regarding the final WDRs. The petition must be received by the State Water Board at the following address within 30 calendar days of the Regional Water Board's action:

State Water Resources Control Board
Office of Chief Counsel
P.O. Box 100, 1001 I Street
Sacramento, CA 95812-0100

For instruction on how to file a petition for review see http://www.waterboards.ca.gov/public_notices/petitions/water_quality/wqpetition_instr.shtml

E. Information and Copying

The Report of Waste Discharge (ROWD), related documents, tentative effluent limitations and special provisions, comments received, and other information are on file and may be inspected at the address identified in section VIII.C, above at any time between 8:30 a.m. and 4:45 p.m., Monday through Friday. Copying of documents may be arranged through the Regional Water Board by calling (707) 576-2220.

F. Register of Interested Persons

Any person interested in being placed on the mailing list for information regarding the WDRs and NPDES permit should contact the Regional Water Board, reference this Facility, and provide a name, address, and phone number.

G. Additional Information

Requests for additional information or questions regarding this order should be directed to Cathleen Goodwin at Cathleen.Goodwin@waterboards.ca.gov or (707) 576-2687.

Attachment F-1 – Mendocino City CSD Wastewater Treatment Plant RPA Summary

Pollutant	Qualifier	Value	Unit	No. ND	MEC	Co	B	Endpoint
Arsenic		0.8	µg/L	0	0.8	8	3	3
Cadmium	ND	0.02	µg/L	1	<0.02	1	0	3
Chromium (Total)		0.65	µg/L	0	0.65	190,000	0	3
Copper		17	µg/L	0	17	3	2	3
Lead		0.37	µg/L	0	0.37	2	0	3
Mercury		0.00138	µg/L	0	0.00138	0.04	0.0005	3
Nickel		1.1	µg/L	0	1.1	5	0	3
Selenium	DNQ	0.56	µg/L	0	0.56	15	0	3
Silver	ND	0.02	µg/L	1	<0.02	0.7	0.16	3
Zinc		63	µg/L	0	63	20	8	3
Cyanide		4	µg/L	0	4	1	0	3
Total Chlorine Residual[1]		600	µg/L	81	600	2	0	1
Ammonia (expressed as Nitrogen)		1,300	µg/L	8	1,300	600	0	2
Ammonia (expressed as Nitrogen)		280	µg/L					

Pollutant	Qualifier	Value	Unit	No. ND	MEC	Co	B	Endpoint
Ammonia (expressed as Nitrogen)		250	µg/L					
Ammonia (expressed as Nitrogen)		100	µg/L					
Ammonia (expressed as Nitrogen)		180	µg/L					
Ammonia (expressed as Nitrogen)		100	µg/L					
Ammonia (expressed as Nitrogen)		210	µg/L					
Ammonia (expressed as Nitrogen)		200	µg/L					
Ammonia (expressed as Nitrogen)		140	µg/L					
Ammonia (expressed as Nitrogen)		210	µg/L					
Ammonia (expressed as Nitrogen)		140	µg/L					
Ammonia (expressed as Nitrogen)		100	µg/L					
Ammonia (expressed as Nitrogen)		100	µg/L					
Ammonia (expressed as Nitrogen)		280	µg/L					
Ammonia (expressed as Nitrogen)		180	µg/L					
Ammonia (expressed as Nitrogen)		320	µg/L					
Ammonia (expressed as Nitrogen)		210	µg/L					
Ammonia (expressed as Nitrogen)		100	µg/L					

Pollutant	Qualifier	Value	Unit	No. ND	MEC	Co	B	Endpoint
Ammonia (expressed as Nitrogen)		180	µg/L					
Ammonia (expressed as Nitrogen)		280	µg/L					
Ammonia (expressed as Nitrogen)		140	µg/L					
Ammonia (expressed as Nitrogen)		180	µg/L					
Ammonia (expressed as Nitrogen)		250	µg/L					
Ammonia (expressed as Nitrogen)		210	µg/L					
Ammonia (expressed as Nitrogen)		390	µg/L					
Ammonia (expressed as Nitrogen)		100	µg/L					
Ammonia (expressed as Nitrogen)		320	µg/L					
Ammonia (expressed as Nitrogen)		240	µg/L					
Ammonia (expressed as Nitrogen)		280	µg/L					
Ammonia (expressed as Nitrogen)		280	µg/L					
Ammonia (expressed as Nitrogen)		1300	µg/L					
Ammonia (expressed as Nitrogen)		140	µg/L					
Ammonia (expressed as Nitrogen)		280	µg/L					
Ammonia (expressed as Nitrogen)		100	µg/L					

Pollutant	Qualifier	Value	Unit	No. ND	MEC	Co	B	Endpoint
Ammonia (expressed as Nitrogen)		210	µg/L					
Ammonia (expressed as Nitrogen)		180	µg/L					
Ammonia (expressed as Nitrogen)	<	60	µg/L					
Ammonia (expressed as Nitrogen)	<	100	µg/L					
Ammonia (expressed as Nitrogen)	<	100	µg/L					
Ammonia (expressed as Nitrogen)	<	100	µg/L					
Ammonia (expressed as Nitrogen)	<	100	µg/L					
Ammonia (expressed as Nitrogen)	<	100	µg/L					
Ammonia (expressed as Nitrogen)	<	100	µg/L					
Ammonia (expressed as Nitrogen)	<	100	µg/L					
Acute Toxicity		--	TUa	0	--	0.3	0	--
Chronic Toxicity	--	--	TUc	0	80	1	0	2
Chronic Toxicity, *Atherinops affinis* Survival		80	TUc					
Chronic Toxicity, *Atherinops affinis* Growth		80	TUc					
Chronic Toxicity, *Atherinops affinis* Survival		80	TUc					
Chronic Toxicity, *Atherinops affinis* Growth		80	TUc					

Pollutant	Qualifier	Value	Unit	No. ND	MEC	Co	B	Endpoint
Chronic Toxicity, *Strongylocentrotus purpuratus* Reproduction		80	TUc					
Chronic Toxicity, *Strongylocentrotus purpuratus* Reproduction		80	TUc					
Chronic Toxicity, *Strongylocentrotus purpuratus* Reproduction		80	TUc					
Chronic Toxicity, *Strongylocentrotus purpuratus* Reproduction		80	TUc					
Chronic Toxicity, *Strongylocentrotus purpuratus* Reproduction		80	TUc					
Chronic Toxicity, *Macrocystis pyrifera* Germination		80	TUc					
Chronic Toxicity, *Macrocystis pyrifera* Tube Length		80	TUc					
Chronic Toxicity, *Macrocystis pyrifera* Germination		80	TUc					
Chronic Toxicity, *Macrocystis pyrifera* Tube Length		80	TUc					
Phenolic Compounds (non-chlorinated)	ND	66	µg/L	1	<66	30	0	3
Chlorinated phenolics	ND	28	µg/L	1	<28	1	0	3
Endosulfan, Sum	ND	0.09	µg/L	1	<0.09	0.009	0	3
Endosulfan I	ND	0.09	µg/L					
Endosulfan II	ND	0.09	µg/L					

Pollutant	Qualifier	Value	Unit	No. ND	MEC	Co	B	Endpoint
Endrin	ND	0.09	µg/L	1	<0.09	0.002	0	3
HCH, sum	ND	0.08	µg/L	1	<0.08	0.004	0	3
alpha-BHC	ND	0.08	µg/L					
beta-BHC	ND	0.2	µg/L					
delta-BHC	ND	0.2	µg/L					
gamma-BHC (Lindane)	ND	0.08	µg/L					
Acrolein	ND	2	µg/L	1	<2	220	0	3
Antimony	DNQ	0.24	µg/L	0	DNQ 0.24	1,200	0	3
Bis(2-chloroethoxy)methane	ND	0.81	µg/L	1	<0.81	4.4	0	3
Bis(2-chloroisopropyl)ether	ND	0.41	µg/L	1	<0.41	1,200	0	3
Chlorobenzene	ND	0.3	µg/L	1	<0.3	570	0	3
Chromium (III)		See Total Chromium	µg/L	--	--	190,000	0	--
Di-n-butyl phthalate	ND	0.91	µg/L	1	<0.91	3,500	0	3
Dichlorobenzenes, sum	ND	0.4	µg/L	1	<0.4	5,100	0	3
1,2-Dichlorobenzene	ND	0.4	µg/L					
1,3-Dichlorobenzene	ND	0.4	µg/L					
Diethyl Phthalate	ND	0.86	µg/L	1	<0.86	33,000	0	3

Pollutant	Qualifier	Value	Unit	No. ND	MEC	Co	B	Endpoint
Dimethyl Phthalate	ND	0.68	µg/L	1	<0.68	820,000	0	3
4,6-Dinitro-2-methylphenol	ND	0.1	µg/L	2	<0.1	220	0	3
4,6-Dinitro-2-methylphenol	ND	0.75	µg/L					
2,4-Dinitrophenol	ND	0.3	µg/L	2	<0.3	4	0	3
2,4-Dinitrophenol	ND	1.3	µg/L					
Ethylbenzene	ND	0.4	µg/L	1	<0.4	4,100	0	3
Fluoranthene	ND	0.76	µg/L	1	<0.76	15	0	3
Hexachlorocyclopentadiene	ND	0.9	µg/L	2	<0.45	58	0	3
Hexachlorocyclopentadiene	ND	0.45	µg/L					
Nitrobenzene	ND	0.74	µg/L	1	<0.74	4.9	0	3
Thallium	ND	0.02	µg/L	1	<0.02	2	0	3
Toluene	ND	0.3	µg/L	1	<0.3	85,000	0	3
Tributyltin	ND	0.004	µg/L	1	<0.004	0.0014	0	3
1,1,1-Trichloroethane	ND	0.4	µg/L	1	<0.4	540,000	0	3
Acrylonitrile	ND	0.4	µg/L	1	<0.4	0.1	0	3
Aldrin	ND	0.09	µg/L	1	<0.09	0.000022	0	3

Pollutant	Qualifier	Value	Unit	No. ND	MEC	Co	B	Endpoint
Benzene	ND	0.3	µg/L	1	<0.3	5.9	0	3
Benzidine	ND	3.4	µg/L	1	<3.4	0.000069	0	3
Beryllium	ND	0.02	µg/L	1	<0.02	0.033	0	3
Bis(2-chloroethyl)ether	ND	0.14	µg/L	1	<0.14	0.045	0	3
Bis(2-ethylhexyl)Phthalate	ND	0.83	µg/L	1	<0.83	3.5	0	3
Carbon Tetrachloride	ND	0.4	µg/L	1	<0.4	0.9	0	3
Chlordane	ND	0.9	µg/L	2	<0.3	0.000023	0	3
Chlordane (tech)	ND	0.3	µg/L					
Oxychlordane	ND	0.2	µg/L					
Chlorodibromomethane		1.6	µg/L	0	4	8.6	0	2
Chlorodibromomethane		2.58	µg/L					
Chlorodibromomethane		4	µg/L					

Pollutant	Qualifier	Value	Unit	No. ND	MEC	Co	B	Endpoint
Chloroform		4.89	µg/L	0	59.15	130	0	2
Chloroform		4.07	µg/L					
Chloroform		15.67	µg/L					
Chloroform		13.52	µg/L					
Chloroform		18.89	µg/L					
Chloroform		15.55	µg/L					
Chloroform		15.77	µg/L					
Chloroform		17.42	µg/L					
Chloroform		16.37	µg/L					
Chloroform		19.09	µg/L					
Chloroform		23.92	µg/L					
Chloroform		12.91	µg/L					
Chloroform		32.01	µg/L					
Chloroform		26.49	µg/L					
Chloroform		24.3	µg/L					
Chloroform		16.01	µg/L					
Chloroform		56.43	µg/L					
Chloroform		48	µg/L					
Chloroform		59.15	µg/L					
DDT, Sum	ND	0.04	µg/L	1	<0.04	0.00017	0	3
2,4-DDD	ND	0.04	µg/L					
2,4-DDE	ND	0.05	µg/L					
2,4-DDT	ND	0.05	µg/L					
4,4-DDD	ND	0.2	µg/L					
4,4-DDE	ND	0.2	µg/L					
4,4-DDT	ND	0.2	µg/L					
1,4-Dichlorobenzene	ND	0.3	µg/L	1	<0.3	18	0	3

Pollutant	Qualifier	Value	Unit	No. ND	MEC	Co	B	Endpoint
3,3'-Dichlorobenzidine	ND	2	µg/L	1	<2	0.0081	0	3
1,2-Dichloroethane	ND	0.4	µg/L	1	<0.4	28	0	3
1,1-Dichloroethylene	ND	0.3	µg/L	1	<0.3	0.9	0	3
Dichlorobromomethane		2.73	µg/L	0	24.87	6.2	0	2
Dichlorobromomethane		3.41	µg/L					
Dichlorobromomethane		3.6	µg/L					
Dichlorobromomethane		3.03	µg/L					
Dichlorobromomethane		2.87	µg/L					
Dichlorobromomethane		9.74	µg/L					
Dichlorobromomethane		8.56	µg/L					
Dichlorobromomethane		9.39	µg/L					
Dichlorobromomethane		12.9	µg/L					
Dichlorobromomethane		13.9	µg/L					
Dichlorobromomethane		11.01	µg/L					
Dichlorobromomethane		8.28	µg/L					
Dichlorobromomethane		6.57	µg/L					
Dichlorobromomethane		18.1	µg/L					
Dichlorobromomethane		10.87	µg/L					
Dichlorobromomethane		12.81	µg/L					
Dichlorobromomethane		24.87	µg/L					
Dichlorobromomethane		18	µg/L					
Dichlorobromomethane		20.09	µg/L					
Dichloromethane	ND	0.5	µg/L	1	<0.5	450	0	3

Pollutant	Qualifier	Value	Unit	No. ND	MEC	Co	B	Endpoint
1,3-Dichloropropene	ND	0.4	µg/L	1	<0.4	8.9	0	3
Dieldrin	ND	0.07	µg/L	1	<0.07	0.00004	0	3
2,4-Dinitrotoluene	ND	0.68	µg/L	1	<0.68	2.6	0	3
1,2-Diphenylhydrazine	ND	0.33	µg/L	1	<0.33	0.16	0	3
Halomethanes	ND	0.39	µg/L	3	<0.39	130	0	3
Halomethanes	ND	0.39	µg/L					
Halomethanes	ND	1.2	µg/L					
Bromoform	ND	0.39	µg/L					
Bromoform	ND	0.39	µg/L					
Bromoform	ND	0.3	µg/L					
Bromomethane	ND	0.4	µg/L					
Chloromethane	ND	0.4	µg/L					
Heptachlor	ND	0.07	µg/L	1	<0.07	0.00005	0	3
Heptachlor epoxide	ND	0.2	µg/L	1	<0.2	0.00002	0	3
Hexachlorobenzene	ND	0.89	µg/L	1	<0.89	0.00021	0	3
Hexachlorobutadiene	ND	0.84	µg/L	1	<0.84	14	0	3
Hexachloroethane	ND	0.58	µg/L	1	<0.58	2.5	0	3
Isophorone	ND	0.81	µg/L	1	<0.81	730	0	3

Pollutant	Qualifier	Value	Unit	No. ND	MEC	Co	B	Endpoint
N-Nitrosodimethylamine	ND	1.1	µg/L	1	<1.1	7.3	0	3
N-Nitrosodi-N-Propylamine	ND	0.85	µg/L	1	<0.85	0.38	0	3
N-Nitrosodiphenylamine	ND	0.9	µg/L	1	<0.9	2.5	0	3
PAHs	ND	120	µg/L	2	<2.47	0.0088	0	3
PAHs	ND	2.47	µg/L					
PCBs	ND	0.4	µg/L	1	<0.4	0.000019	0	3
PCB-1016	ND	0.8	µg/L					
PCB-1221	ND	2	µg/L					
PCB-1232	ND	1	µg/L					
PCB-1242	ND	0.4	µg/L					
PCB-1248	ND	0.6	µg/L					
PCB-1254	ND	0.4	µg/L					
PCB-1260	ND	0.4	µg/L					
TCDD Equivalents	ND	1.12×10^{-7}	µg/L	1	9.85×10^{-8}	0.0000000039	0	3
TCDD Equivalents	ND	2.09×10^{-7}	µg/L					
TCDD Equivalents	ND	2.57×10^{-7}	µg/L					
TCDD Equivalents	ND	1.55×10^{-7}	µg/L					
TCDD Equivalents	ND	9.85×10^{-8}	µg/L					
1,1,2,2-Tetrachloroethane	ND	0.3	µg/L	1	<0.3	2.3	0	3
Tetrachloroethylene	ND	0.4	µg/L	1	<0.4	2.0	0	3
Toxaphene	ND	3	µg/L	1	<3	0.00021	0	3

Pollutant	Qualifier	Value	Unit	No. ND	MEC	Co	B	Endpoint
Trichloroethylene	ND	0.4	µg/L	1	<0.4	27	0	3
1,1,2-Trichloroethane	ND	0.4	µg/L	1	<0.4	9.4	0	3
2,4,6-Trichlorophenol	ND	0.4	µg/L	2	<0.4	0.29	0	3
2,4,6-Trichlorophenol	ND	0.74	µg/L					
Vinyl Chloride	ND	0.4	µg/L	1	<0.4	36	0	3

[1] Total residual chlorine was detected in 134 out of 215 samples with results ranging between ND to 600 µg/L based. Samples were collected between July 1, 2010 and December 31, 2014.