ORDER NO. R1-2015-0029
NPDES NO. CA0023060
WDID NO. 1B80078OMEN

WASTE DISCHARGE REQUIREMENTS AND MASTER RECLAMATION PERMIT

FOR THE

CITY OF WILLITS
WASTEWATER TREATMENT FACILITY
MENDOCINO COUNTY

The following Permittee is subject to waste discharge requirements (WDRs) set forth in this Order:

Table 1. Permittee Information

Permittee	City of Willits
Name of Facility	Wastewater Treatment Facility
Facility Address	300 N. Lenore Street
	Willits, CA 95490
	Mendocino County
Type of Facility	Publicly Owned Treatment Works (POTW)
Facility Design Flow	7.0 million gallons per day (mgd) (average monthly flow (AMW))
Facility Permitted Flow	4.0 mgd as AMW

Table 2. Discharge Location

Discharge Point	Effluent Description	Discharge Point Latitude (North)	Discharge Point Longitude (West)	Receiving Water
002	Secondary treated wastewater	39° 25’ 10”	123° 20’ 32”	Groundwater
003	Enhanced secondary treated wastewater	39° 25’ 38”	123° 20’ 37”	Outlet Creek
004	Enhanced secondary treated wastewater	39° 25’ 38”	123° 20’ 35”	Groundwater

DRAFT

Table 3. Administrative Information

This Order was adopted on:	**October 8, 2015**
This Order shall become effective on:	**December 1, 2015**
This Order shall expire on:	**November 30, 2020**
The Permittee shall file a Report of Waste Discharge as an application for reissuance of WDRs in accordance with title 23, Cal. Code of Regs, and an application for reissuance of a National Pollutant Discharge Elimination System (NPDES) permit no later than:	**June 3, 2020**
The U.S. Environmental Protection Agency (U.S. EPA) and the California Regional Water Quality Control Board, North Coast Region have classified this discharge as follows:	Major

IT IS HEREBY ORDERED, that Waste Discharge Requirements (WDR) Order No. R1-2010-0017 and Monitoring and Reporting Program (MRP) No. R1-2010-0017, are rescinded upon the effective date of this Order except for enforcement purposes, and in order to meet the provisions contained in division 7 of the California Water Code (Water Code) (commencing with section 13000) and regulations and guidelines adopted thereunder, and the provisions of the federal Clean Water Act (CWA) and regulations and guidelines adopted thereunder, the Permittee shall comply with the requirements of this Order. This action in no way prevents the North Coast Regional Water Quality Control Board (Regional Water Board) from taking enforcement action for past violations of the previous permit.

I, Matthias St. John, Executive Officer, do hereby certify that this Order with all attachments is a full, true, and correct copy of the Order adopted by the California Regional Water Quality Control Board, North Coast Region, on **October 8, 2015.**

_____
Matthias St. John, Executive Officer

15_0029_CityOfWillits_WWTF_NPDES

DRAFT

Contents

I. Facility Information 4
II. Findings 4
III. Discharge Prohibitions 5
IV. Effluent Limitations and Discharge Specifications 5
A. Effluent Limitations – Discharge Points 002 and 003 5
1. Final Effluent Limitations – Discharge Point 002 5
2. Final Effluent Limitations – Discharge Point 003 6
3. Interim Effluent Limitations – Not Applicable 7
B. Land Discharge Specifications – Not Applicable 7
C. Recycling Specifications and Requirements – Discharge Point 004 8
D. Other Requirements 12
V. Receiving Water Limitations 13
A. Surface Water Limitation 13
B. Groundwater Limitations 15
VI. Provisions 16
A. Standard Provisions 16
B. Monitoring and Reporting Program (MRP) Requirements 16
C. Special Provisions 16
1. Reopener Provisions 16
2. Special Studies, Technical Reports and Additional Monitoring Requirements 17
3. Best Management Practices and Pollution Prevention 19
4. Construction, Operation and Maintenance Specifications 20
5. Special Provisions for Municipal Facilities (POTWs Only) 21
6. Other Special Provisions 24
7. Compliance Schedules – Not Applicable 25
VII. Compliance Determination 25

Tables

Table 1. Permittee Information 1
Table 2. Discharge Location 1
Table 3. Administrative Information 2
Table 4. Effluent Limitations – Discharge Point 002 6
Table 5. Effluent Limitations – Discharge Point 003 7

Attachments

Attachment A – Definitions A-1
Attachment B – Map B-1
Attachment C – Facility Schematics C-1
Attachment D – Standard Provisions D-1
Attachment E – Monitoring and Reporting Program E-1
Attachment F – Fact Sheet F-1
Attachment G 1 – Final Ammonia Average Monthly Effluent Limitations G-1
Attachment G-2 – Final Ammonia Maximum Daily Effluent Limitations G-1

DRAFT

I. FACILITY INFORMATION

Information describing the City of Willits (Permittee), Wastewater Treatment Facility (Facility) is summarized in Table 1 and in sections I and II of the Fact Sheet (Attachment F). Section I of the Fact Sheet also includes information regarding the Facility's permit application.

II. FINDINGS

The California Regional Water Quality Control Board, North Coast Region (Regional Water Board), finds:

A. Legal Authorities. This Order is issued pursuant to section 402 of the federal Clean Water Act (CWA) and implementing regulations adopted by the U.S. Environmental Protection Agency (U.S. EPA) and chapter 5.5, division 7 of the California Water Code (commencing with section 13370). It shall serve as a NPDES permit for point source discharges from this Facility to surface waters. This Order also serves as Waste Discharge Requirements (WDRs) pursuant to article 4, chapter 4, division 7 of the Water Code (commencing with section 13260) and a Master Recycling Permit pursuant to article 4, Chapter 7, division 7 of the Water Code (commencing with section 13500).

B. Basis and Rationale for Requirements. The Regional Water Board developed the requirements in this Order based on information submitted as part of the Permittee's application, monitoring and reporting programs, and other available information. The Fact Sheet (Attachment F) contains background information and rationale for the requirements in this Order, and is hereby incorporated into this Order and constitutes Findings for this Order. Attachments A through E are also incorporated into this Order.

C. Provisions and Requirements Implementing State Law. The provisions/requirements in subsections III.E, III.F, IV.B, IV.C, V.B, and VI.C.5 of this Order and sections VI, VII, IX.A, X.D.4, and X.E of the Monitoring and Reporting Program are included to implement state law only. These provisions/requirements are not required or authorized under the federal CWA; consequently, violations of these provisions/requirements are not subject to the enforcement remedies that are available for NPDES violations.

D. Notification of Interested Parties. The Regional Water Board has notified the Permittee and interested agencies and persons of its intent to prescribe WDRs for the discharge and has provided them with an opportunity to submit their written comments and recommendations. Details of the notification are provided in the Fact Sheet.

E. Consideration of Public Comment. The Regional Water Board, in a public meeting, heard and considered all comments pertaining to the discharge. Details of the Public Hearing are provided in the Fact Sheet.

DRAFT

III. DISCHARGE PROHIBITIONS

A. The discharge of any waste not disclosed by the Permittee or not within the reasonable contemplation of the Regional Water Board is prohibited.

B. Creation of pollution, contamination, or nuisance, as defined by section 13050 of the Water Code is prohibited.

C. The discharge of sludge or digester supernatant is prohibited, except as authorized under section VI.C.5.c of this Order (Sludge Disposal and Handling Requirements).

D. The discharge or reclamation use of untreated or partially treated waste (receiving a lower level of treatment than described in section II.A of the Fact Sheet) from anywhere within the collection, treatment, or disposal systems is prohibited, except as provided for in section IV.C (Recycling Specifications and Requirements) and in Attachment D, Standard Provisions G (Bypass) and H (Upset).

E. Any sanitary sewer overflow (SSO) that results in a discharge of untreated or partially treated wastewater to (a) waters of the state or (b) land, and creates pollution, contamination, or nuisance, as defined in Water Code section 13050 is prohibited.

F. The discharge of waste for which the Permittee has not explicitly been permitted is prohibited, except for use for fire suppression as provided in Cal. Code of Regs title 22, sections 60307(a) and 60307(b).

G. The discharge of waste at any point not described in Finding II.B of the Fact Sheet or authorized by a permit issued by the State Water Board or another Regional Water Board is prohibited.

H. The discharge of waste to the Eel River and its tributaries is prohibited during the period from May 15 through September 30 of each year.

I. The discharge of septage to a location other than an approved septage receiving station is prohibited.

J. The mean daily flow of waste through the Facility shall not exceed 4.0 mgd, measured continuously at Monitoring Location EFF-002, calculated daily and averaged over a calendar month.

IV. EFFLUENT LIMITATIONS AND DISCHARGE SPECIFICATIONS

A. Effluent Limitations – Discharge Points 002 and 003

1. Final Effluent Limitations – Discharge Point 002

a. The Permittee shall maintain compliance with the following effluent limitations at Discharge Point 002, with compliance measured at Monitoring Location EFF-002 as described in the Monitoring and Reporting Program (MRP) (Attachment E).

DRAFT

Table 4. Effluent Limitations – Discharge Point 002

Parameter	Units	Effluent Limitations[1, 2]				
		Average Monthly	Average Weekly	Maximum Daily	Instantaneous Minimum	Instantaneous Maximum
Biochemical Oxygen Demand 5-day @ 20°C (BOD_5)	mg/L	10	15	--	--	--
	lbs/day[3]	334	500	--	--	--
Total Suspended Solids (TSS)	mg/L	10	15	--	--	--
	lbs/day[3]	334	500	--	--	--
pH	s.u.	--	--	--	6.5	8.5
Nitrogen, Total (as N)	mg/L	10	--	--	--	--

Table Notes:
1. See Definitions in Attachment A and Compliance Determination discussion in section VII of this Order.
2. Effluent limitations for this parameter shall apply at all times. During periods of discharge at Discharge Point 003, enforcement for these parameters shall be applied in accordance with Water Code section 13385. At all other times, including during periods of discharge at Discharge Point 004, compliance shall be evaluated in light of the Basin Plan and title 22 requirements.
3. Mass-based effluent limitations are based on the permitted average monthly flow of 4.0 mgd.

b. **Percent Removal**. The average monthly percent removal of BOD_5 and TSS shall not be less than 85 percent. Percent removal shall be determined from the monthly average value of influent wastewater concentration in comparison to the monthly average value of effluent concentration for the same constituent over the same time period as measured at Monitoring Locations INF-001 and EFF-002, respectively.

c. **Disinfection**[1]. Disinfected effluent discharged from the wastewater treatment plant through Discharge Point 002 to the enhancement wetland shall not contain total coliform bacteria exceeding the following concentrations, as measured at Monitoring Location EFF-002:

i. The median value of total coliform bacteria shall not exceed a Most Probable Number (MPN) of 23 per 100 milliliters (mL), in a calendar month; and

ii. The maximum daily value of total coliform bacteria shall not exceed an MPN of 240 per 100 mL.

2. Final Effluent Limitations – Discharge Point 003

a. The Permittee shall maintain compliance with the following effluent limitations at Discharge Point 003, with compliance measured at Monitoring Location EFF-003 as described in the Monitoring and Reporting Program (MRP) (Attachment E).

[1] Effluent limitations for this parameter shall apply at all times. During periods of discharge to surface water at Discharge Point 003, mandatory penalties for this parameter shall be applied in accordance with Water Code section 13385. At all other times, including during periods of recycled water discharge at Discharge Point 004, compliance shall be evaluated in light of the Basin Plan and title 22 requirements.

DRAFT

Table 5. Effluent Limitations – Discharge Point 003

Parameter	Units	Effluent Limitations[1]				
		Average Monthly	Average Weekly	Maximum Daily	Instantaneous Minimum	Instantaneous Maximum
pH	s.u.	--	--	--	6.5	8.5
Bis (2-Ethylhexyl) Phthalate	µg/L	1.8	--	3.6	--	--
Copper, Total Recoverable	µg/L	3.3	--	6.6	--	--
Ammonia Nitrogen, Total (as N)	mg/L	1.9	--	4.9	--	--
Nitrogen, Total (as N)	mg/L	1.6/6.0[2]	--	--	--	--
Settleable Solids	ml/L	0.1	--	0.2	--	--

Table Notes:
1. See Definitions in Attachment A and Compliance Determination discussion in section VII of this Order.
2. The effluent limitation of 1.6 mg/L applies only under critical conditions which occur when receiving water in Outlet Creek is either greater than 15°C or flowing at less than 2.4 cubic feet per second (cfs). At all other times, the total nitrogen effluent limitation for Discharge Point 003 shall be 6.0 mg/L.

b. Discharge Rate. During the period from October 1 through May 14, discharges of treated wastewater shall not exceed 10 percent (1:10) of the upstream receiving water flow. For purposes of this Order, the flow in Outlet Creek shall be measured at the concrete flow-control structure in the creek below the confluence of Bechtel and Broaddus Creeks.

c. Acute Toxicity. There shall be no acute toxicity in treated wastewater discharged to the Eel River and its tributaries. The Permittee will be considered in compliance with this limitation when the survival of aquatic organisms in a 96-hour bioassay of undiluted effluent complies with the following:

i. Minimum for any one bioassay: 70 percent survival; and

ii. Median for any three or more consecutive bioassays: at least 90 percent survival.

Compliance with these effluent limitations shall be determined in accordance with section VII of this Order and section V.A of the MRP (Attachment E).

3. Interim Effluent Limitations – Not Applicable

This Order does not establish interim effluent limitations or schedules for compliance with final limitations.

B. Land Discharge Specifications – Not Applicable

This Order does not authorize discharges of waste to land except for use for fire suppression as provided in Cal. Code of Regs title 22, sections 60307(a) and 60307(b). Discharges of waste to land related to recycled water are found in section IV.C.

DRAFT

C. Recycling Specifications and Requirements – Discharge Point 004

1. Recycling Specifications

a. Effluent Limitations. The Permittee shall maintain compliance with the limitations in section IV.A.1 of this Order during the period from May 15 through September 30 and all other times seasonally appropriate for discharges of recycled water via Discharge Point 004 to pasture areas identified in Attachment C-4.

b. Discharge Rate. Discharges of recycled water via Discharge Point 004 to pasture areas identified in Attachment C-4, shall not exceed the agronomic requirements[2] of the crops being irrigated.

2. Recycling Requirements

a. The Permittee shall comply with applicable state and local requirements regarding the production and use of recycled wastewater, including requirements of Water Code sections 13500 – 13577 (Water Reclamation) and State Water Board, Division of Drinking Water (DDW) regulations at title 22, sections 60301 – 60357 of the CCR (Water Recycling Criteria).

b. The Permittee shall maintain an up-to-date DDW approved Recycled Water Engineering Report. The Permittee shall submit to DDW and the Regional Water Board a Recycled Water Engineering Report prepared in accordance with title 22 requirements **within 1 year of the permit effective date**. The Permittee shall receive approval of its title 22 Engineering Report from DDW prior to adding any new recycled water user(s).

c. The Permittee shall be responsible for ensuring that recycled water meets the quality standards of this Order and for the operation and maintenance of transport facilities and associated appurtenances. The Permittee shall hold the recycled water users responsible for the application and use of recycled water on their designated areas and associated operations and maintenance in accordance with all applicable title 22 requirements.

d. The Permittee shall be responsible for the operation and maintenance of transport facilities and associated appurtenances necessary to convey and distribute the recycled water from the point of production to the point of use.

e. The Permittee shall notify the Regional Water Board Executive Officer in anticipation of reclaiming water at a new location prior to commencement of reclamation activities at the new location. The notice shall include the following: site location, acreage involved, County Assessor Parcel number(s), name of property owner, name of use site supervisor, estimation of the anticipated volume of recycled water to be used, demonstration that recycled water will be applied at agronomic rates, a description of recycled water management facilities and best management practices (BMPs) that will be used to ensure compliance with the requirements of this Order, and demonstration of California Environmental Quality Act (CEQA) compliance.

---

[2] Agronomic requirements refers to a specific rate of recycled water application that provides optimum amount of water, nutrients, and salts, which selected crops require or tolerate without having any excessive nutrient or salt percolate beyond the root zone.

DRAFT

f. The Permittee shall designate a Recycled Water Use Supervisor to operate and maintain the recycled water use areas. The Recycled Water Use Supervisor shall be responsible for the recycled water system. Specific responsibilities of the Recycled Water Use Supervisor, at a minimum, shall include the following:

i. Ensuring proper installation, operation, and maintenance of the irrigation system;

ii. Control of on-site piping to prevent any cross-connections with potable water supplies;

iii. Development and implementation of a set of procedures to verify on an ongoing basis that cross-connections have not occurred between potable water supplies and recycled water supplies;

iv. Routine inspection and maintenance of backflow prevention devices installed to protect potable water supplies, consistent with Cal. Code of Regs, title 17, section 7605; and

v. General responsibilities to ensure compliance with this Order and continuous implementation of any BMPs identified as necessary to prevent potential hazards to public health and to protect the environment.

g. The Permittee shall conduct periodic inspections of the irrigation system, facilities, and operations to monitor and ensure compliance with the conditions of this Order.

h. The Permittee shall report all violations of this Order in the Permittee's recycled water/irrigation monitoring reports, including incidental runoff events.

The Permittee shall ensure that each recycled water user minimizes the potential for surface runoff of recycled water. The Regional Water Board recognizes that even with diligent implementation of BMPs, incidental runoff events may occur on occasion. Incidental runoff is defined as unintended small amounts of runoff from recycled water use areas where agronomic rates and appropriate BMPs are being implemented. Examples of incidental runoff include unintended, minimal over-spray from sprinklers that escapes the recycled water use area or accidental breakage of a sprinkler head on a properly maintained irrigation system. Water leaving the irrigation/recycled water use area is not considered incidental if it is part of the facility design, if it is due to excessive application, if it is due to intentional overflow or application, or if it is due to negligence. Incidental runoff events are typically infrequent, low volume, accidental, not due to a pattern of neglect or lack of oversight, and are promptly addressed. The Regional Water Board recognizes that such minor violations are unavoidable and present a low risk to water quality. All runoff incidents, including incidental runoff shall be summarized in the Permittee's recycled water monitoring reports. Enforcement action shall be considered for runoff that is not incidental, inadequate response by the Permittee, repeated runoff incidents that were within the Permittee's control, where incidental runoff causes violations of water quality objectives, incidents that create a condition of pollution or nuisance, and discharges that reach surface waters in violation of Discharge Prohibitions in section III of this Order and/or Recycling Requirements specified in section IV.C.2 of this Order.

i. The use of treated effluent for irrigation shall not result in unreasonable waste of water.

DRAFT

j. All use of treated effluent for irrigation provided pursuant to this Order shall be treated and managed in conformance with all applicable provisions of the Recycled Water Policy.

k. The discharge or use of treated effluent for irrigation shall not cause or contribute to an exceedance of any applicable water quality standard. The Permittee shall be responsible for ensuring that all recycled water meets all terms and conditions of this Order, including the quality standards in sections IV and VI of this Order.

l. The Permittee shall discontinue all delivery of treated effluent for irrigation during any period that there is reason to believe that the requirements for use as specified in this Order or the requirements of DDW or U.S. EPA are not being met. The delivery of treated effluent for irrigation shall not resume until all conditions have been corrected.

m. Disinfected tertiary recycled water shall not be irrigated within 50 feet of any domestic water supply well or domestic water supply surface intake, unless the technical requirements specified in CCR title 22, section 60310(a) have been met and approved by DDW.

n. The use of treated effluent for irrigation shall not cause degradation of any water supply.

o. Areas irrigated with treated effluent shall be managed to prevent ponding and conditions conducive to the proliferation of mosquitoes and other disease vectors, and to avoid creation of a public nuisance or health hazard. The following practices shall be implemented, at a minimum:

i. Irrigation water shall infiltrate completely within a 48-hour period; and

ii. Low-pressure and unpressurized pipelines and ditches that may be accessible to mosquitoes shall not be used to store recycled water.

p. All areas where treated effluent is used for irrigation that are accessible to the public shall be posted with signs that are visible to the public, in a size no less than 4 inches high by 8 inches wide that include the following wording: 'RECYCLED WATER – DO NOT DRINK'. [CCR title 22, section 60310(g)] Each sign shall display an international symbol similar to that shown in CCR title 22, Figure 60310-A. These warning signs shall be posted at least every 500 feet with a minimum of a sign at each corner and access road. DDW may accept alternative signage or wording, or an educational program, provided that the applicant demonstrates to DDW that the alternative approach will assure an equivalent degree of public notification.

q. The seasonal nutritive loading of the treated effluent used for irrigation, including the nutritive value of organic and chemical fertilizers and of the treated effluent, shall not exceed the nutritive demand of the landscape.

r. Treated effluent used for irrigation shall not be allowed to escape the recycled water use areas in the form of surface runoff. [CCR title 22, section 60310(e)] However, incidental runoff of recycled water, as described in section IV.C.2.i, above, is not a violation of this Order. Where appropriate, practices and strategies to prevent the occurrence of runoff shall include, but not be limited to:

DRAFT

i. A minimum 50-foot setback to all surface waters or provide written documentation of appropriate BMPs that will be implemented to prevent or minimize the potential for runoff discharging to surface water;

ii. Implementation of an Operations and Maintenance Plan that provides for detection of leaks (for example from sprinkler heads), and correction within 72 hours of learning that runoff, or prior to release of 1,000 gallons, whichever comes first;

iii. Proper design and aim of sprinkler heads;

iv. Proper design and operation of the irrigation system;

v. Refraining from application during precipitation events;

vi. Application at an agronomic rate that does not exceed the water or nutrient demand of the crop or vegetation being irrigated;

vii. Use of repeat start times and multiple water days to increase irrigation efficiency and reduce runoff potential. The goal of this BMP is to apply the volume of water needed to meet the needs of the crop or vegetation being irrigated by breaking the volume up into smaller volumes. For example, apply one hour of irrigation in four 15-minute applications, separated by an hour each. This will allow more water to soak into the ground and reduce runoff;

viii. Maintenance of irrigation infrastructure (pipelines, pumps, etc.) to prevent and minimize breakage and leaks; and

ix. Adequate protection of all effluent storage reservoirs and ponds against overflow, structural damage, or a reduction in efficiency resulting from a 25-year, 24-hour storm or flood event or greater, and notification of the Regional Water Board Executive Officer, if a discharge occurs. Use areas that are spray irrigated and allow public access shall be irrigated during periods of minimal use. Consideration shall be given to allow maximum drying time prior to subsequent public use.

s. Direct or windblown spray, mist, or runoff from irrigation areas shall not enter dwellings, designated outdoor eating areas, or food handling facilities, roadways, or any other area where the public would accidentally be exposed to recycled water. (Cal. Code Regs., tit. 22, § 60310(e)(3).)

t. All irrigation equipment, pumps, piping, valves, quick couplers and outlets shall be a type or secured in a manner that only permits operation by authorized personnel and shall be appropriately marked to differentiate them from potable facilities.

u. The main shutoff valve of the irrigation system meter shall be tagged with a recycled water warning sign. The valve shall be equipped with an appropriate locking device to prevent unauthorized operation of the valve.

v. The Permittee shall implement the requirements of the California Health and Safety Code (CHSC), section 116815 regarding the installation of purple pipe. CHSC section 116815 requires that "*all pipes installed above or below the ground, on or after June 1, 1993, that are designed to carry recycled water, shall be colored purple or distinctively wrapped with purple tape*." Section 116815 also contains exemptions that apply to municipal facilities that have established a labeling or marking system for

DRAFT

recycled water used on their premises and for water delivered for agricultural use. The Permittee shall document compliance with this requirement on an annual basis in its annual monitoring report. The Permittee shall continue to implement the requirements of CHSC section 116815 during the term of this Order.

w. The use of recycled water for dust suppression shall only occur during periods of dry weather, shall be limited to periods of short duration, and shall be limited to areas under the control of the Permittee.

D. Other Requirements

1. Disinfection Process Requirements for the UV Disinfection System

The Permittee shall operate the UV disinfection system in accordance with the following operating protocol and technical and administrative requirements in order to demonstrate compliance with the effluent limitations at Discharge Point 002 specified in section IV.A.1.c of this Order:

a. The Permittee shall provide continuous, reliable monitoring of flow, UV transmittance, UV intensity, UV dose, UV power, and turbidity. The Permittee must demonstrate compliance with the UV dose requirement.

b. The Permittee shall operate the UV disinfection system to provide a minimum UV dose of 50 millijoules per square centimeter (mJ/cm^2) at all times at Monitoring Location INT-001, unless otherwise approved by DDW.

c. The UV transmittance (at least 254 nanometers) in the wastewater shall not fall below 65 percent of maximum at any time, unless otherwise approved by DDW.

d. The quartz sleeves and cleaning system components shall be visually inspected per the manufacturer's operation manual for physical wear (scoring, solarization, seal leaks, etc.) and to check the efficacy of the cleaning system.

e. The quartz sleeves shall be cleaned at fixed intervals to ensure the minimum required UV dose delivery is consistently achieved. Cleaning intervals shall be increased as necessary to ensure compliance with permit requirements such as UV dose and total coliform organism requirements.

f. Lamps shall be replaced per the manufacturer's recommendation, or sooner, if there are indications the lamps are failing to provide adequate disinfection. Lamp age and lamp replacement records must be maintained for a time period consistent with the record retention requirements in the Standard Provisions (Attachment D, section IV).

g. The UV disinfection system shall be operated in accordance with an approved Operations and Maintenance Plan, which specifies clearly the operational limits and responses required for critical alarms. A copy of the approved operations plan should be maintained at the Facility and be readily available to operations personnel and regulatory agencies. A quick reference plant operations data sheet should be posted at the Facility and include the following information:

i. The alarm set points for turbidity, high and low flow, UV dose and transmittance, UV lamp operations hours, and power.

DRAFT

ii. The values of turbidity, high and low flow, UV dose and transmittance, UV lamp operation hours, and power when flow must be diverted to waste.

iii. The values of high daily and weekly median total coliform when an operational response must be taken.

iv. The required frequency of calibration for all meters measuring turbidity, flow, UV transmittance, and power.

v. The required frequency of mechanical cleaning/wiping and equipment inspection.

vi. The UV lamp age tracking procedures and replacement intervals.

h. Flow meters and UV transmittance monitors must be properly calibrated to ensure proper disinfection.

i. The UV transmittance meter must be inspected and checked against a reference bench-top unit weekly to document accuracy.

j. If the on-line analyzer UV transmittance reading varies from the bench-top spectrophotometer UV transmittance reading by 2 percent or more, the on-line UV transmittance analyzer must be recalibrated by a procedure recommended by the manufacturer.

k. The UV disinfection system must be operated with a built-in automatic reliability feature that must be triggered when the system is below the target UV dose. If the measured UV dose goes below the minimum UV dose, the UV reactor in question must alarm and startup the next available row of UV lamps or UV lamp bank.

l. Equivalent or substitutions of equipment shall not occur without an adequate demonstration of equivalent disinfection performance to the satisfaction and approval of DDW.

m. Flow through the UV disinfection system shall not exceed 7.0 mgd, unless otherwise approved by DDW.

V. RECEIVING WATER LIMITATIONS

A. Surface Water Limitation

Receiving water limitations are based on water quality objectives contained in the Basin Plan, and are a required part of this Order. Receiving water conditions not in conformance with the limitation are not necessarily a violation of this Order. Compliance with receiving water limitations shall be measured at monitoring locations described in the MRP (Attachment E). The Regional Water Board may require an investigation to determine cause and culpability prior to asserting that a violation has occurred.

Discharges from the Facility shall not cause the following in the receiving water:

1. The discharge shall not cause the dissolved oxygen concentration of the receiving water to be depressed below 7.0 mg/L. Additionally, the discharge shall not cause the dissolved oxygen content of the receiving water to fall below 10.0 mg/L more than 50 percent of the time, or below 7.5 mg/L more than 10 percent of the time in a calendar year. In the event that the receiving waters are determined to have a dissolved oxygen concentration of less

DRAFT

than 7.0 mg/L, the discharge shall not depress the dissolved oxygen concentration below the existing level.

2. The discharge shall not cause the specific conductance (micromhos[3]) concentration of the receiving waters to increase above 200 micromhos more than 50 percent of the time, or above 400 micromhos more than 10 percent of the time.

3. The discharge shall not cause the total dissolved solids concentration of the receiving waters to increase above 125 mg/L more than 50 percent of the time, or above 230 mg/L more than 10 percent of the time.

4. The discharge shall not cause the pH of receiving waters to be depressed below 6.5 nor raised above 8.5. Within this range, the discharge shall not cause the pH of the receiving waters to be changed at any time more than 0.5 units from that which occurs naturally.

5. The discharge shall not cause the turbidity of receiving waters to be increased more than 20 percent above naturally occurring background levels.

6. The discharge shall not cause receiving waters to contain suspended material in concentrations that cause nuisance or adversely affect beneficial uses.

7. The discharge shall not cause receiving waters to contain floating materials, including solids, liquids, foams, and scum, in concentrations that cause nuisance or adversely affect beneficial uses.

8. The discharge shall not cause receiving waters to contain taste- or odor-producing substances in concentrations that impart undesirable tastes or odors to fish flesh or other edible products of aquatic origin, that cause nuisance, or that adversely affect beneficial uses.

9. The discharge shall not cause coloration of receiving waters that causes nuisance or adversely affects beneficial uses.

10. The discharge shall not cause receiving waters to contain substances in concentrations that result in deposition of material that causes nuisance or adversely affect beneficial uses.

11. The discharge shall not cause receiving waters to contain biostimulatory substances in concentrations that promote objectionable aquatic growth to the extent that such growth causes nuisance or adversely affects beneficial uses.

12. The discharge shall not cause receiving waters to contain toxic substances in concentrations that are toxic to, or that produce detrimental physiological responses in humans, plants, animals, or aquatic life. Compliance with this objective will be determined by use of indicator organisms, analyses of species diversity, population density, growth anomalies, bioassays of appropriate duration, or other appropriate methods, as specified by the Regional Water Board.

13. The discharge shall not cause a measurable temperature change in the receiving water at any time.

[3] Measured at 77°F.

DRAFT

14. The discharge shall not cause an individual pesticide or combination of pesticides to be present in concentrations that adversely affect beneficial uses. The discharge shall not cause bioaccumulation of pesticide concentrations in bottom sediments or aquatic life.

15. The discharge shall not cause receiving waters to contain concentrations of pesticides in excess of the limiting concentrations set forth in Table 3-2 of the Basin Plan or in excess of more stringent Maximum Contaminant Levels (MCLs) established for these pollutants in Cal. Code Regs., tit. 22, division 4, chapter 15, articles 4 and 5.5.

16. The discharge shall not cause receiving waters to contain oils, greases, waxes, or other materials in concentrations that result in a visible film or coating on the surface of the water or on objects in the water, that cause nuisance, or that otherwise affect beneficial uses.

17. The discharge shall not cause a violation of any applicable water quality standard for receiving waters adopted by the Regional Water Board or the State Water Board, as required by the federal Clean Water Act and regulations adopted thereunder. If more stringent applicable water quality standards are promulgated or approved pursuant to section 303 of the Clean Water Act, or amendments thereto, the Regional Water Board will revise and modify this Order in accordance with such more stringent standards.

18. The discharge shall not cause concentrations of chemical constituents to occur in excess of limits specified in Table 3-2 of the Basin Plan or in excess of more stringent MCLs established for these pollutants in Cal. Code Regs., tit. 22, division 4, chapter 15, articles 4 and 5.5 or in concentrations that adversely affect the agricultural supply beneficial use.

19. The discharge shall not cause receiving waters to contain radionuclides in concentrations which are deleterious to human, plant, animal or aquatic life, nor which result in the accumulation of radionuclides in the food web to an extent which presents a hazard to human, plant, animal or indigenous aquatic life.

B. Groundwater Limitations

1. The collection, treatment, storage, and disposal of wastewater or use of recycled water shall not cause a statistically significant degradation of groundwater quality unless a technical evaluation is performed that demonstrates that any degradation that could reasonably be expected to occur, after implementation of all regulatory requirements (e.g., title 27) and reasonable best management practices, will not violate groundwater quality objectives or cause impacts to beneficial uses of groundwater.

2. The collection, treatment, storage, and disposal of wastewater or use of recycled water shall not cause alterations of groundwater that result in chemical concentrations in excess of limits specified in title 22, sections 64431 (Tables 2 and 3) and 64444, and the Basin Plan.

3. The collection, treatment, storage, and disposal of wastewater or use of recycled water shall not cause levels of radionuclides in groundwater in excess of the limits specified in title 22, division 4, chapter 15, article 5, section 64443 of the CCR.

4. The collection, treatment, storage, and disposal of wastewater or use of recycled water shall not cause groundwater to contain taste- or odor-producing substances in concentrations that cause nuisance or adversely affect beneficial uses.

5. In groundwaters used for domestic or municipal supply (MUN), the collection, treatment, storage, and disposal of treated wastewater or use of recycled water shall not cause the

DRAFT

median of the most probable number of coliform organisms over any 7-day period to exceed 1.1 MPN/100 mL, 1 colony/100 mL.

VI. PROVISIONS

A. Standard Provisions

1. **Federal Standard Provisions.** The Permittee shall comply with all Standard Provisions included in Attachment D of this Order.

2. **Regional Water Board Standard Provisions.** The Permittee shall comply with the following Regional Water Board standard provisions. In the event that there is any conflict, duplication, or overlap between provisions specified by this Order, the more stringent provision shall apply:

   a. Failure to comply with provisions or requirements of this Order, or violation of other applicable laws or regulations governing discharges from this facility, may subject the Permittee to administrative or civil liabilities, criminal penalties, and/or other enforcement remedies to ensure compliance. Additionally, certain violations may subject the Permittee to civil or criminal enforcement from appropriate local, state, or federal law enforcement entities.

   b. In the event the Permittee does not comply or will be unable to comply for any reason, with any prohibition, interim or final effluent limitation, land discharge specification, reclamation specification, other specification, receiving water limitation, or provision of this Order that may result in a significant threat to human health or the environment, such as inundation of treatment components, breach of pond containment, recycled water main break or equivalent release, irrigation runoff, etc., that results in a discharge to a drainage channel or a surface water, the Permittee shall Regional Water Board staff within 24 hours of having knowledge of such non-compliance. Spill notification and reporting shall be conducted in accordance with Section V.E of Attachment D and X.E of the Monitoring and Reporting Program.

B. Monitoring and Reporting Program (MRP) Requirements

The Permittee shall comply with the MRP, included as Attachment E of this Order, and future revisions thereto.

C. Special Provisions

1. **Reopener Provisions**

   a. **Standard Revisions.** If applicable water quality standards are promulgated or approved pursuant to Section 303 of the CWA, or amendments thereto, the Regional Water Board may reopen this Order and make modifications in accordance with such revised standards.

   b. **Reasonable Potential.** This Order may be reopened for modification to include an effluent limitation, if monitoring establishes that the discharge causes, or has the reasonable potential to cause or contribute to, an excursion above a water quality criterion or objective applicable to the receiving water.

   c. **Whole Effluent Toxicity.** As a result of a Toxicity Reduction Evaluation (TRE), this Order may be reopened to include a numeric chronic toxicity limitation, a new acute

DRAFT

toxicity limitation, and/or a limitation for a specific toxicant identified in the TRE. Additionally, if a numeric chronic toxicity water quality objective is adopted by the State Water Board, this Order may be reopened to include a numeric chronic toxicity effluent limitation based on that objective.

d. **303(d)-Listed Pollutants.** If an applicable total maximum daily load (TMDL) (see Fact Sheet, section III.D) program is adopted, this Order may be reopened and effluent limitations for the pollutant(s) that are the subject of the TMDL modified or imposed to conform this Order to the TMDL requirements.

e. **Water Effects Ratios (WERs) and Metal Translators.** A default WER of 1.0 has been used in this Order for calculating CTR criteria for applicable priority pollutant inorganic constituents. If the Permittee performs studies to determine site-specific WERs and/or site-specific dissolved-to-total metal translators and submits a report that demonstrates that WER or translator studies were performed in accordance with U.S. EPA or other approved guidance, this Order may be reopened to modify the effluent limitations for the applicable constituents.

f. **Nutrients.** This Order contains effluent limitations for ammonia and total nitrogen and effluent and receiving water monitoring for nutrients (ammonia, nitrate, nitrite, organic nitrogen, total nitrogen, and phosphorus). If new water quality objectives for nutrients are established, if monitoring data indicate the need for new or revised effluent limitations for any of these parameters, or if new or revised methods for compliance with effluent limitations for any of these parameters are developed, this Order may be reopened and modified to include new or modified effluent limitations or other requirements, as necessary.

g. **Salt and Nutrient Management Plans (SNMPs).** The Recycled Water Policy adopted by the State Water Board on February 3, 2009, and effective May 14, 2009, recognizes the fact that some groundwater basins in the state contain salts and nutrients that exceed or threaten to exceed water quality objectives in the applicable Basin Plans, and that not all Basin Plans include adequate implementation procedures for achieving or ensuring compliance with the water quality objectives for salt or nutrients. The Recycled Water Policy finds that the appropriate way to address salt and nutrient issues is through the development of regional or subregional SNMPs rather than through imposing requirements solely on individual recycled water projects. This Order may be reopened to incorporate provisions consistent with any SNMP(s) adopted by the Regional Water Board.

h. **Title 22 Engineering Report.** This Order implements title 22 requirements to protect public health. If future revisions to the Permittee's title 22 engineering report require modifications to this Order to adequately implement title 22, this Order may be reopened and modified as necessary.

2. Special Studies, Technical Reports and Additional Monitoring Requirements

a. Toxicity Reduction Requirements (TRE)

i. **Whole Effluent Toxicity.** The MRP of this Order requires routine monitoring for whole effluent toxicity of the discharge at Monitoring Location EFF-003 as described in section V of the MRP. As established by the MRP, if either of the effluent limitations for acute toxicity is exceeded (a single sample with less than

70% survival or a three sample median of less than 90% survival) or if a reported median monthly summary result for chronic toxicity is exceeded, the Permittee shall conduct accelerated monitoring as specified in section V of the MRP.

Chronic toxicity is expressed as a null hypothesis (H_0) and regulatory management decision (*b* value) of 0.75 for the chronic toxicity methods in the MRP. The null hypothesis for this discharge is:

H_0: Mean response (100% effluent) ≤ 0.75 mean response (control)

Results shall be analyzed and reported using the Test of Significant Toxicity hypothesis testing approach (EPA 833-R-10-003, 2010) in the MRP.

Results of accelerated toxicity monitoring will indicate a need to conduct a TRE if toxicity persists; or it will indicate that a return to routine toxicity monitoring is justified because toxicity has not been identified by accelerated monitoring. TREs shall be conducted in accordance with the TRE Work Plan prepared by the Permittee pursuant to section VI.C.2.a.ii. of this Order and section V.B.9 of the MRP.

ii. TRE Work Plan. An updated TRE workplan shall be submitted **by March 1, 2016**. The Permittee's TRE Work Plan shall be reviewed and updated as necessary in order to remain current and applicable to the discharge and discharge facilities.

The Permittee shall notify the Regional Water Board of this review and submit any revisions of the TRE Work Plan within 90 days of the notification, to be ready to respond to toxicity events. The TRE Work Plan shall describe the steps the Permittee intends to follow if toxicity is detected, and should include at least the following items:

(a) A description of the investigation and evaluation techniques that would be used to identify potential causes and sources of toxicity, effluent variability, and treatment system efficiency.

(b) A description of the Facility's methods of maximizing in-house treatment efficiency, good housekeeping practices, and a list of all chemicals used in the operation of this Facility.

(c) If a toxicity identification evaluation (TIE) is necessary, an indication of the person who would conduct the TIEs (i.e., an in-house expert or an outside contractor).

b. Source Control and Pretreatment Studies

i. Local Limits Study. The Permittee shall conduct a Local Limits Study to determine pollutants of concern, collect and analyze data, calculate maximum allowable headworks loadings (MAHLs) for each pollutant of concern, and designate and implement technically-based local limits, where necessary, for industrial users discharging to the Permittee's collection system. The Local Limits Study shall be conducted in accordance with U.S. EPA's July 2004 *Local Limits Development Guidance* (EPA 833-R-04-002A) and shall be submitted to the Regional Water Board by **March 1, 2018**.

DRAFT

ii. Updated Sewer Use Ordinance. The Permittee shall perform a review of the existing sewer use ordinance to ensure the Permittee has the necessary legal authorities to monitor and enforce source control standards, restrict discharges of toxic materials to the collection system and inspect facilities connected to the system. In conducting the review, the Permittee may consult the January 2007 *EPA Model Pretreatment Ordinance* (EPA 833-B-06-002). The Permittee shall submit a report documenting the results of the review and recommended revisions to the sewer use ordinance, if applicable, to the Regional Water Board by **March 1, 2017**. If the report recommends revisions to the sewer use ordinance, the Permittee shall update the sewer use ordinance accordingly by **March 1, 2018**.

3. Best Management Practices and Pollution Prevention

a. Pollutant Minimization Program (PMP)

i. The Permittee shall, as required by the Executive Officer, develop and conduct a PMP as further described below when there is evidence (e.g sample results from analytical methods more sensitive than those methods required by this Order, presence of whole effluent toxicity, health advisories for fish consumption, results of benthic or aquatic organism tissue sampling) that a priority pollutant is present in the effluent above an effluent limitation and either:

(a) The concentration of the pollutant is reported as Detected, but Not Quantified (DNQ) and the effluent limitation is less than the reporting level (RL);

(b) A sample result is reported as non-detect (ND) and the effluent limitation is less than the MDL, using definitions described in Attachment A and reporting protocols described in MRP section X.B.4.

ii. The PMP shall include, but not be limited to, the following actions and submittals acceptable to the Regional Water Board:

(a) An annual review and semi-annual monitoring of potential sources of the reportable priority pollutant(s), which may include fish tissue monitoring and other bio-uptake sampling;

(b) Quarterly monitoring for the reportable priority pollutant(s) in the influent to the wastewater treatment system;

(c) Submittal of a control strategy designed to proceed toward the goal of reducing concentrations of the reportable priority pollutant(s) in the effluent below the effluent limitation;

(d) Implementation of appropriate cost-effective control measures for the reportable priority pollutant(s), consistent with the control strategy; and

(e) An annual status report that shall be submitted as part of the Annual Facility Report due **March 1st** to the Regional Water Board and shall include:

(1) All PMP monitoring results for the previous year;

(2) A list of potential sources of the reportable pollutant(s);

DRAFT

(3) A summary of all actions undertaken pursuant to the control strategy; and

(4) A description of actions to be taken in the following year.

4. Construction, Operation and Maintenance Specifications

a. This Order (Attachment D, Standard Provision I.D) requires that the Permittee at all times properly operate and maintain all facilities and systems of treatment and control (and related appurtenances) that are installed or used by the Permittee to achieve compliance with this Order. Proper operation and maintenance includes adequate laboratory quality control and appropriate quality assurance procedures.

b. The Permittee shall submit an updated Operation and Maintenance (O&M) Manual for the operational components of the Facility by **October 1, 2016**. The Permittee shall update the O&M Manual, as necessary, to conform to changes in operation and maintenance of the Facility. The O&M Manual shall be readily available to operating personnel onsite and for review by state or federal inspectors. The O&M Manual shall include the following.

i. Description of the Facility's organizational structure showing the number of employees, duties and qualifications and plant attendance schedules (daily, weekends and holidays, part-time, etc.). The description should include documentation that the personnel are knowledgeable and qualified to operate the Facility so as to achieve the required level of treatment at all times.

ii. Detailed description of safe and effective operation and maintenance of treatment processes, process control instrumentation and equipment.

iii. Description of laboratory and quality assurance procedures.

iv. Process and equipment inspection and maintenance schedules.

v. Description of safeguards to assure that, should there be reduction, loss, or failure of electric power, the Permittee will be able to comply with requirements of this Order.

vi. Description of preventive (fail-safe) and contingency (response and cleanup) plans for controlling accidental discharges, and for minimizing the effect of such events. These plans shall identify the possible sources (such as loading and storage areas, power outage, waste treatment unit failure, process equipment failure, tank and piping failure) of accidental discharges, untreated or partially treated waste bypass, and polluted drainage.

c. Septage Handling Requirements

i. The Permittee shall implement any necessary legal authorities to monitor and enforce septage handling requirements, including restriction of discharges of toxic materials to the collection system and wastewater treatment facility and inspection facilities connected to the system.

ii. The Permittee shall maintain a waste hauler manifest that identifies the names of the hauler, county identification number, the date and time the waste load was transferred, and the volume and source of the waste.

DRAFT

iii. The Permittee shall accept the discharge of septage only during business hours and when the Permittee's operations staff is on site.

iv. The Permittee shall accept septage only at an approved septage receiving station/location.

v. The Permittee shall collect representative grab samples of septage loads in accordance with the MRP (Attachment E).

5. Special Provisions for Municipal Facilities (POTWs Only)

a. Wastewater Collection Systems

i. Statewide General WDRs for Sanitary Sewer Systems

The Permittee has coverage under, and is separately subject to, the requirements of State Water Board Order No. 2006-003-DWQ, Statewide General WDRs for Sanitary Sewer Systems, as amended by Order No. WQ 2013-0058-EXEC. As such, the Permittee provides notification and reporting of SSOs in accordance with the requirements of Order Nos. 2006-0003-DWQ and WQ 2013-0058-EXEC and any revisions thereto for operation of its wastewater collection system.

b. Source Control and Pretreatment Provisions

i. The Permittee shall perform source control functions and provide a summary of source control activities conducted in the Annual Report (due **March 1st** to the Regional Water Board). Source control functions and requirements shall include the following:

(a) Implement the necessary legal authorities to monitor and enforce source control standards, restrict discharges of toxic materials to the collection system and inspect facilities connected to the system.

(b) If waste haulers are allowed to discharge to the Facility, establish a waste hauler permit system, to be reviewed by the Executive Officer, to regulate waste haulers discharging to the collection system or Facility.

(c) Industrial Waste Survey (IWS)

(1) The Permittee shall conduct an IWS of all the industrial users (IUs) in the service area of the Facility to determine whether any IUs are subject to pretreatment standards specified in 40 C.F.R. part 403. The Permittee shall also perform a priority pollutant scan[4] of the influent to the Facility. At a minimum, the IWS must identify the following for each industrial user and zero-discharging categorical industrial user: whether it qualifies as a significant user; the average and peak flow rates; the SIC code; any pretreatment being implemented by each

[4] The priority pollutant scan shall include California Toxics Rule (CTR) and title 22 pollutants. CTR pollutants are those pollutants identified in the California Toxics Rule at 40 C.F.R. section 131.38, and title 22 pollutants are those pollutants for which the State Water Resources Control Board (State Water Board), Division of Drinking Water (DDW) has established Maximum Contaminant Levels (MCLs) Cal. Code of Regs at title 22, division 4, chapter 15, sections 64431 (Inorganic Chemicals) and 64444 (Organic Chemicals). Duplicate analyses are not required for pollutants that are identified as CTR and title 22 pollutants.

DRAFT

industrial user; and whether or not the Permittee has issued a permit to any of the identified industrial users. The IWS and priority pollutant monitoring is required during the 12-month period that begins on **January 1, 2016**.

(2) The results of the IWS and priority pollutant monitoring shall be submitted to the Regional Water Board in a written report no later than **March 1, 2017**. The written report shall include a certification report indicating whether the Facility receives pollutants from any IU that would require the Permittee to establish a pretreatment program in accordance with 40 C.F.R. part 403.

(d) Perform public outreach to educate industrial, commercial, and residential users about the importance of preventing discharges of industrial and toxic wastes to the wastewater treatment plant, at least once per year.

(e) Perform on-going inspections and monitoring, as necessary, to ensure adequate source control.

ii. In the event that the Permittee identifies industrial wastes subject to regulation under the NPDES Pretreatment Program being discharged to the wastewater treatment plant, or the Regional Water Board or its Executive Officer determines that circumstances warrant pretreatment requirements in order to prevent interference [40 C.F.R. §403.3(j)] with the wastewater treatment Facility or Pass Through [40 C.F.R. §403.3(n)], then:

(a) The Permittee shall notify the Regional Water Board **within 30 days** after there are discharges that trigger the pretreatment requirements;

(b) The Permittee shall submit a revised ROWD and the pretreatment program for the Regional Water Board's review and approval as soon as possible, but **not more than one year after the Permittee's notification** to the Regional Water Board of the need for pretreatment requirements being triggered;

(c) The Permittee shall enforce the federal categorical pretreatment standards on all categorical industrial users (CIUs);

(d) The Permittee shall notify each CIU of its discharge effluent limits. The limits must be as stringent as the pretreatment standards contained in the applicable federal category (40 C.F.R. Part 400-699). The Permittee may develop more stringent, technology-based local limits if it can show cause; and

(e) The Permittee shall notify the Regional Water Board if any CIU violates its discharge effluent limits.

iii. The Regional Water Board retains the right to take legal action against an industrial user and/or the Permittee where a user fails to meet the approved applicable federal, state, or local pretreatment standards.

iv. The Regional Water Board may amend this Order, at any time, to require the Permittee to develop and implement an industrial pretreatment program pursuant to the requirements of 40 C.F.R. Part 403 if the Regional Water Board

DRAFT

finds that the Facility receives pollutants from an IU that is subject to pretreatment standards, or if other circumstances so warrant.

c. Sludge Disposal and Handling Requirements

i. Sludge, as used in this Order, means the solid, semisolid, and liquid residues removed during primary, secondary, or advanced wastewater treatment processes. Solid waste refers to grit and screenings generated during preliminary treatment. Biosolids refers to sludge that has been treated, tested, and demonstrated to be capable of being beneficially and legally used pursuant to federal and state regulations as a soil amendment for agriculture, silviculture, horticulture, and land reclamation activities.

ii. All collected sludges and other solid waste removed from liquid wastes shall be removed from screens, sumps, ponds, and tanks as needed to ensure optimal plant operation and disposed of in accordance with applicable federal and state regulations.

iii. The use and disposal of biosolids shall comply with all of the land application and disposal requirements in 40 C.F.R. Part 503, which are enforceable by the U.S. EPA. If during the life of this Order, the state accepts primacy for implementation of 40 C.F.R. Part 503, the Regional Water Board may also initiate enforcement where appropriate.

iv. Sludge or biosolids that are disposed of in a municipal solid waste landfill or used as daily landfill cover shall meet the applicable requirements of 40 C.F.R. Part 258. In the annual self-monitoring report, the Permittee shall report the amount of sludge placed in a landfill and the landfill(s) which received the sludge or biosolids.

v. The Permittee shall take all reasonable steps to prevent sludge use or disposal in violation of this Order that may adversely affect human health or the environment.

vi. Solids and sludge treatment, storage, and disposal or reuse shall not create a nuisance, such as objectionable odors or flies, and shall not result in groundwater contamination.

vii. Solids and sludge treatment and storage sites shall have facilities adequate to divert surface water runoff from adjacent areas, to protect the boundaries of the site from erosion, and to prevent drainage from the treatment and storage site. Adequate protection is defined as protection from a design storm with a 100-year recurrence interval and 24-hour duration.

viii. The discharge of sewage sludge and solids shall not cause waste material to be in a position where it is, or can be, conveyed from the treatment and storage sites and deposited in the waters of the state.

d. Biosolids Management

For any discharge of biosolids from the Facility, the Permittee shall comply with the following requirements:

i. For the land application of biosolids as soil amendment within the North Coast region, **by June 15, 2016,** the Permittee shall obtain or maintain coverage under

DRAFT

the State Water Board Water Quality Order No. 2004-0012-DWQ General Waste Discharge Requirements for the Discharge of Biosolids to Land or Use as a Soil Amendment in Agricultural, Silvicultural, Horticultural, and Land Reclamation Activities, or

ii. Alternatively, the Permittee may dispose of biosolids at another appropriately permitted facility.

iii. New sludge treatment and storage facilities must comply with the requirements of the CCR title 27 for the protection of water quality.

e. Operator Certification

Supervisors and operators of municipal wastewater treatment facilities shall possess a certificate of appropriate grade in accordance with CCR title 23, section 3680. The State Water Board may accept experience in lieu of qualification training. In lieu of a properly certified wastewater treatment facility operator, the State Water Board may approve use of a water treatment facility operator of appropriate grade certified by DDW where water recycling is involved.

f. Adequate Capacity

If the Facility will reach capacity within 4 years, the Permittee shall notify the Regional Water Board. A copy of such notification shall be sent to appropriate local elected officials, local permitting agencies, and the press. Factors to be evaluated in assessing reserve capacity shall include, at a minimum, (1) comparison of the wet weather design flow with the highest daily flow, and (2) comparison of the average dry weather design flow with the lowest 30-day flow. The Permittee shall demonstrate that adequate steps are being taken to address the capacity problem. The Permittee shall submit a technical report to the Regional Water Board showing how flow volumes will be prevented from exceeding capacity, or how capacity will be increased, **within 120 days after providing notification to the Regional Water Board**, or within 120 days after receipt of Regional Water Board notification that the Facility will reach capacity within 4 years. The time for filing the required technical report may be extended by the Regional Water Board. An extension of 30 days may be granted by the Executive Officer, and longer extensions may be granted by the Regional Water Board itself. [CCR title 23, section 2232].

6. Other Special Provisions

a. Storm Water

For the control of storm water discharge from the Facility, if required, the Permittee shall seek separate authorization to discharge under the requirements of the State Water Board's Water Quality Order No. 2014-0057-DWQ, NPDES General Permit No. CAS000001, General Permit for Storm Water Discharges Associated with Industrial, which is not incorporated by reference in this Order.

BMPs to control the run-on of storm water to the Facility site shall be maintained and upgraded as necessary. The Permittee shall describe the effectiveness of these storm water BMPs, as well as activities to maintain and upgrade these BMPs during the previous year, in its annual report to the Regional Water Board.

DRAFT

7. Compliance Schedules – Not Applicable

This Order does not establish interim effluent limitations or schedules of compliance for final numeric effluent limitations.

VII. COMPLIANCE DETERMINATION

Compliance with the effluent limitations contained in section IV of this Order will be determined as specified below.

A. General

Compliance with effluent limitations for priority pollutants, when effluent limitations have been established, shall be determined using sample reporting protocols defined in the MRP and Attachment A of this Order. For purposes of reporting and administrative enforcement by the Regional and State Water Boards, the Permittee shall be deemed out of compliance with effluent limitations if the concentration of pollutant in the monitoring sample is greater than the effluent limitation and greater than or equal to the reported minimum level (ML).

B. Multiple Sample Data

When determining compliance with an AMEL for priority pollutants, and more than one sample result is available, the Permittee shall compute the arithmetic mean unless the data set contains one or more reported determinations of "Detected, but Not Quantified" (DNQ) or "Not Detected" (ND). In those cases, the Permittee shall compute the median in place of the arithmetic mean in accordance with the following procedure.

1. The data set shall be ranked from low to high, ranking the reported ND determinations lowest, DNQ determinations next, followed by quantified values (if any). The order of the individual ND or DNQ determinations is unimportant.
2. The median value of the data set shall be determined. If the data set has an odd number of data points, then the median is the middle value. If the data set has an even number of data points, then the median is the average of the two values around the middle unless one or both of the points are ND or DNQ, in which case the median value shall be the lower of the two data points where DNQ is lower than a value and ND is lower than DNQ.

C. Average Monthly Effluent Limitation (AMEL)

If the average (or when applicable, the median determined by subsection B above for multiple sample data) of daily discharges over a calendar month exceeds the AMEL for a given parameter, this will represent a single violation, though the Permittee will be considered out of compliance for each day of that month for that parameter (e.g., resulting in 31 days of non-compliance in a 31-day month). If only a single sample is taken during the calendar month and the analytical result for that sample exceeds the AMEL, the Permittee will be considered out of compliance for that calendar month. The Permittee will only be considered out of compliance for days when the discharge occurs.

D. Average Weekly Effluent Limitation (AWEL)

If the average (or when applicable, the median determined by subsection B above for multiple sample data) of daily discharges over a calendar week exceeds the AWEL for a given parameter, this will represent a single violation, though the Permittee will be considered out of compliance for each day of that week for that parameter, resulting in 7 days of non-compliance. If only a

DRAFT

single sample is taken during the calendar week and the analytical result for that sample exceeds the AWEL, the Permittee will be considered out of compliance for that calendar week. The Permittee will only be considered out of compliance for days when the discharge occurs.

E. Maximum Daily Effluent Limitation (MDEL)

If a daily discharge (or when applicable, the median determined by subsection B, above, for multiple sample data of a daily discharge) exceeds the MDEL for a given parameter, the Permittee will be considered out of compliance for that parameter for that 1 day only within the reporting period.

F. Instantaneous Minimum Effluent Limitation

If the analytical result of a single grab sample is lower than the instantaneous minimum effluent limitation for a parameter, the Permittee will be considered out of compliance for that parameter for that single sample. Non-compliance for each sample will be considered separately (e.g., the results of two grab samples taken within a calendar day that both are lower than the instantaneous minimum effluent limitation would result in two instances of non-compliance with the instantaneous minimum effluent limitation).

If the Permittee monitors pH continuously, pursuant to 40 C.F.R. section 401.17, the Permittee shall be in compliance with the pH limitation specified herein provided that both of the following conditions are satisfied: (1) the total time during which the pH values are outside the required range of pH values shall not exceed 7 hours and 26 minutes in any calendar month; and (2) no individual excursion from the range of pH values shall exceed 60 minutes.

G. Instantaneous Maximum Effluent Limitation

If the analytical result of a single grab sample is higher than the instantaneous maximum effluent limitation for a parameter, the Permittee will be considered out of compliance for that parameter for that single sample. Non-compliance for each sample will be considered separately (e.g., the results of two grab samples taken within a calendar day that both exceed the instantaneous maximum effluent limitation would result in two instances of non-compliance with the instantaneous maximum effluent limitation).

If the Permittee monitors pH continuously, pursuant to 40 C.F.R. section 401.17, the Permittee shall be in compliance with the pH limitation specified herein provided that both of the following conditions are satisfied: (1) the total time during which the pH values are outside the required range of pH values shall not exceed 7 hours and 26 minutes in any calendar month; and (2) no individual excursion from the range of pH values shall exceed 60 minutes.

H. Bacteriological Limitations (Total Coliform)

Median. The median is the central tendency concentration of the pollutant. The data set shall be ranked from low to high, ranking the ND concentrations lowest, followed by DNQ and quantified values. The median value is determined based on the number of data points in the set. If the data set has an odd number of data points, then the median is the middle value. If the data set has an even number of data points, the median is the average of the two middle values, unless one or both points are ND or DNQ, in which case the median value shall be the lower of the two middle data points. DNQ is lower than a detected value, and ND is lower than DNQ.

DRAFT

I. Acute Toxicity Limitations

Compliance with the three-sample median acute toxicity effluent limitation shall be determined when there is a discharge, by calculating the median percent survival of the three most recent consecutive samples meeting all test acceptability criteria collected from Monitoring Location EFF-003.

J. Chronic Toxicity

The discharge is subject to determination of "Pass" or "Fail" and "Percent Effect" from a chronic toxicity test using the Test of Significant Toxicity (TST) approach described in National Pollutant Discharge Elimination System Test of Significant Toxicity Implementation Document (EPA 833-R-10-003, 2010), Appendix A, Figure A-1, Table A-1, and Appendix B, Table B-1. The null hypothesis (Ho) for the TST statistical approach is: Mean discharge in stream waste concentration (IWC) response ≤0.75 × Mean control response. A test result that rejects this null hypothesis is reported as "Pass." A test result that does not reject this null hypothesis is reported as "Fail". The relative "Percent Effect" at the discharge IWC is defined and reported as ((Mean control response - Mean discharge IWC response) ÷ Mean control response)) × 100.

The trigger for accelerated monitoring for chronic toxicity is exceeded when a chronic toxicity test, analyzed using the TST approach, results in "Fail" and the "Percent Effect" is ≥0.50.

DRAFT

ATTACHMENT A – DEFINITIONS

Arithmetic Mean (μ)
Also called the average is the sum of measured values divided by the number of samples. For ambient water concentrations, the arithmetic mean is calculated as follows:

Arithmetic mean = $\mu = \Sigma x / n$ where: Σx is the sum of the measured ambient water concentrations, and n is the number of samples.

Average Monthly Effluent Limitation (AMEL)
The highest allowable average of daily discharges over a calendar month, calculated as the sum of all daily discharges measured during a calendar month divided by the number of daily discharges measured during that month.

Average Weekly Effluent Limitation (AWEL)
The highest allowable average of daily discharges over a calendar week (Sunday through Saturday), calculated as the sum of all daily discharges measured during a calendar week divided by the number of daily discharges measured during that week.

Bioaccumulative Pollutants
Substances taken up by an organism from its surrounding medium through gill membranes, epithelial tissue, or from food and subsequently concentrated and retained in the body of the organism.

Carcinogenic Pollutants
Substances that are known to cause cancer in living organisms.

Coefficient of Variation (CV)
A measure of the data variability and is calculated as the estimated standard deviation divided by the arithmetic mean of the observed values.

Daily Discharge
Daily Discharge is defined as either: (1) the total mass of the constituent discharged over the calendar day (12:00 am through 11:59 pm) or any 24-hour period that reasonably represents a calendar day for purposes of sampling (as specified in the permit), for a constituent with limitations expressed in units of mass or; (2) the unweighted arithmetic mean measurement of the constituent over the day for a constituent with limitations expressed in other units of measurement (e.g., concentration).

The daily discharge may be determined by the analytical results of a composite sample taken over the course of one day (a calendar day or other 24-hour period defined as a day) or by the arithmetic mean of analytical results from one or more grab samples taken over the course of the day.

For composite sampling, if 1 day is defined as a 24-hour period other than a calendar day, the analytical result for the 24-hour period will be considered as the result for the calendar day in which the 24-hour period ends.

Detected, but Not Quantified (DNQ)
Sample results that are less than the reported Minimum Level, but greater than or equal to the laboratory's MDL. Sample results reported as DNQ are estimated concentrations.

DRAFT

Dilution Credit
The amount of dilution granted to a discharge in the calculation of a water quality-based effluent limitation, based on the allowance of a specified mixing zone. It is calculated from the dilution ratio or determined through conducting a mixing zone study or modeling of the discharge and receiving water.

Effective Concentration (EC)
A point estimate of the toxicant concentration that would cause an adverse effect on a quantal, "all or nothing," response (such as death, immobilization, or serious incapacitation) in a given percent of the test organisms. If the effect is death or immobility, the term lethal concentration (LC) may be used. EC values may be calculated using point estimation techniques such as probit, logit, and Spearman-Karber. EC25 is the concentration of toxicant (in percent effluent) that causes a response in 25 percent of the test organisms.

Effluent Concentration Allowance (ECA)
A value derived from the water quality criterion/objective, dilution credit, and ambient background concentration that is used, in conjunction with the coefficient of variation for the effluent monitoring data, to calculate a long-term average (LTA) discharge concentration. The ECA has the same meaning as waste load allocation (WLA) as used in U.S. EPA guidance (Technical Support Document For Water Quality-based Toxics Control, March 1991, second printing, EPA/505/2-90-001).

Enclosed Bays
Indentations along the coast that enclose an area of oceanic water within distinct headlands or harbor works. Enclosed bays include all bays where the narrowest distance between headlands or outermost harbor works is less than 75 percent of the greatest dimension of the enclosed portion of the bay. This definition includes but is not limited to: Humboldt Bay, Bodega Harbor, Tomales Bay, Drakes Estero, San Francisco Bay, Morro Bay, Los Angeles Harbor, Upper and Lower Newport Bay, Mission Bay, and San Diego Bay.

Estimated Chemical Concentrations
The estimated chemical concentration that results from the confirmed detection of the substance by the analytical method below the ML value.

Estuaries and Coastal Lagoons are waters at the mouths of streams that serve as mixing zones for fresh and ocean waters during a major portion of the year. Mouths of streams that are temporarily separated from the ocean by sandbars shall be considered as estuaries. Estuarine waters will generally be considered to extend from a bay or the open ocean to the upstream limit of tidal action but may be considered to extend seaward if significant mixing of fresh and salt water occurs in the open coastal waters. The waters described by this definition include but are not limited to the Sacramento-San Joaquin Delta as defined by Section 12220 of the California Water Code, Suisun Bay, Carquinez Strait downstream to Carquinez Bridge, and appropriate areas of the Smith, Klamath, Mad, Eel, Noyo, Russian, San Diego, and Otay Rivers. Estuaries do not include inland surface waters or ocean waters.

Inhibition Concentration
The IC25 is typically calculated as a percentage of effluent. It is the level at which the organisms exhibit 25 percent reduction in biological measurement such as reproduction or growth. It is calculated statistically and used in chronic toxicity testing.

Inland Surface Waters
All surface waters of the state that do not include the ocean, enclosed bays, or estuaries.

DRAFT

Instantaneous Maximum Effluent Limitation
The highest allowable value for any single grab sample or aliquot (i.e., each grab sample or aliquot is independently compared to the instantaneous maximum limitation).

Instantaneous Minimum Effluent Limitation
The lowest allowable value for any single grab sample or aliquot (i.e., each grab sample or aliquot is independently compared to the instantaneous minimum limitation).

Lowest Observed Effect Concentration (LOEC)
The lowest concentration of an effluent or toxicant that results in adverse effects on the test organism (i.e., where the values for the observed endpoints are statistically different from the control).

Maximum Daily Effluent Limitation (MDEL)
The highest allowable daily discharge of a pollutant, over a calendar day (or 24-hour period). For pollutants with limitations expressed in units of mass, the daily discharge is calculated as the total mass of the pollutant discharged over the day. For pollutants with limitations expressed in other units of measurement, the daily discharge is calculated as the arithmetic mean measurement of the pollutant over the day.

Median
The middle measurement in a set of data. The median of a set of data is found by first arranging the measurements in order of magnitude (either increasing or decreasing order). If the number of measurements (n) is odd, then the median = $X_{(n+1)/2}$. If n is even, then the median = $(X_{n/2} + X_{(n/2)+1})/2$ (i.e., the midpoint between the $n/2$ and $n/2+1$).

Method Detection Limit (MDL)
The minimum concentration of a substance that can be measured and reported with 99 percent confidence that the analyte concentration is greater than zero, as defined in 40 C.F.R. part 136, Attachment B, revised as of July 3, 1999.

Minimum Level (ML)
The concentration at which the entire analytical system must give a recognizable signal and acceptable calibration point. The ML is the concentration in a sample that is equivalent to the concentration of the lowest calibration standard analyzed by a specific analytical procedure, assuming that all the method specified sample weights, volumes, and processing steps have been followed.

Mixing Zone
A limited volume of receiving water that is allocated for mixing with a wastewater discharge where water quality criteria can be exceeded without causing adverse effects to the overall water body.

No Observed Effect Concentration (NOEC)
The highest tested concentration of an effluent or a test sample at which the effect is no different from the control effect, according to the statistical test used (see LOEC). The NOEC is usually the highest tested concentration of an effluent or toxicant that causes no observable effects on the aquatic test organisms (i.e., the highest concentration of toxicity at which the values for the observed responses do not statistically differ from the controls). It is determined using hypothesis testing.

Not Detected (ND)
Those sample results less than the laboratory's MDL.

Persistent Pollutants
Substances for which degradation or decomposition in the environment is nonexistent or very slow.

DRAFT

Pollutant Minimization Program (PMP)
PMP means waste minimization and pollution prevention actions that include, but are not limited to, product substitution, waste stream recycling, alternative waste management methods, and education of the public and businesses. The goal of the PMP shall be to reduce all potential sources of a priority pollutant(s) through pollutant minimization (control) strategies, including pollution prevention measures as appropriate, to maintain the effluent concentration at or below the water quality-based effluent limitation. Pollution prevention measures may be particularly appropriate for persistent bioaccumulative priority pollutants where there is evidence that beneficial uses are being impacted. The Regional Water Board may consider cost effectiveness when establishing the requirements of a PMP. The completion and implementation of a Pollution Prevention Plan, if required pursuant to Water Code section 13263.3(d), shall be considered to fulfill the PMP requirements.

Pollution Prevention
Any action that causes a net reduction in the use or generation of a hazardous substance or other pollutant that is discharged into water and includes, but is not limited to, input change, operational improvement, production process change, and product reformulation (as defined in Water Code section 13263.3). Pollution prevention does not include actions that merely shift a pollutant in wastewater from one environmental medium to another environmental medium, unless clear environmental benefits of such an approach are identified to the satisfaction of the State or Regional Water Board.

Publicly Owned Treatment Works (POTW)
A treatment works as defined in section 212 of the Clean Water Act (CWA), which is owned by a government agency as defined by section 502(4) of the CWA. [Section 502(4) of the CWA defines a municipality as a city, town, borough, county, parish, district, association, or other public body created by or pursuant to state law and having jurisdiction over disposal of sewage, industrial wastes, or other wastes). This definition includes any devices and systems used in the storage, treatment, recycling, and reclamation of municipal sewage or industrial wastes of a liquid nature. It also includes sewers, pipes and other conveyances only if they convey wastewater to a POTW Treatment Plant. The term also means the municipality as defined in section 502(4) of the CWA, which has jurisdiction over the Indirect Discharges to and the discharges from such a treatment works.

Reporting Level (RL)
The ML (and its associated analytical method) used for reporting and compliance determination. The MLs included in this Order correspond to approved analytical methods for reporting a sample result that are selected by the Regional Water Board either from Appendix 4 of the SIP in accordance with section 2.4.2 of the SIP or established in accordance with section 2.4.3 of the SIP. The ML is based on the proper application of method-based analytical procedures for sample preparation and the absence of any matrix interferences. Other factors may be applied to the ML depending on the specific sample preparation steps employed. For example, the treatment typically applied in cases where there are matrix-effects is to dilute the sample or sample aliquot by a factor of ten. In such cases, this additional factor must be applied to the ML in the computation of the RL.

Satellite Collection System
The portion, if any, of a sanitary sewer system owned or operated by a different public agency than the agency that owns and operates the wastewater treatment facility that a sanitary sewer system is tributary to.

Source of Drinking Water
Any water designated as municipal or domestic supply (MUN) in a Regional Water Board Basin Plan.

DRAFT

Standard Deviation (σ)
A measure of variability that is calculated as follows:

$$\sigma = (\sum[(x - \mu)^2]/(n - 1))^{0.5}$$

where:

x is the observed value;

μ is the arithmetic mean of the observed values; and

n is the number of samples.

Toxicity Reduction Evaluation (TRE)
A study conducted in a step-wise process designed to identify the causative agents of effluent or ambient toxicity, isolate the sources of toxicity, evaluate the effectiveness of toxicity control options, and then confirm the reduction in toxicity. The first steps of the TRE consist of the collection of data relevant to the toxicity, including additional toxicity testing, and an evaluation of facility operations and maintenance practices, and best management practices. A Toxicity Identification Evaluation (TIE) may be required as part of the TRE, if appropriate. (A TIE is a set of procedures to identify the specific chemical(s) responsible for toxicity. These procedures are performed in three phases (characterization, identification, and confirmation) using aquatic organism toxicity tests.))

Test of Significant Toxicity (TST)
The statistical approach described in National Pollutant Discharge Elimination System Test of Significant Toxicity Implementation Document (EPA 833-R10-003, 2010). TST was developed by the U.S. Environmental Protection Agency (EPA) for analyzing WET and ambient toxicity data. Using the TST approach, the sample is declared toxic if there is greater than or equal to a 25% effect in chronic tests, or if there is greater than or equal to a 20% effect in acute tests at the permitted instream waste concentration (IWC) (referred to as the toxic regulatory management decision (RMD)). The sample is declared non-toxic if there is less than or equal to a 10% effect at the IWC in acute or chronic tests (referred to as the non-toxic RMD).

DRAFT

Water Recycling
The treatment of wastewater to render it suitable for reuse, the transportation of treated wastewater to the place of use, and the actual use of treated wastewater for a direct beneficial use or controlled use that would not otherwise occur.

DRAFT

ATTACHMENT B – MAP

City of Willits
Wastewater Treatment Facility

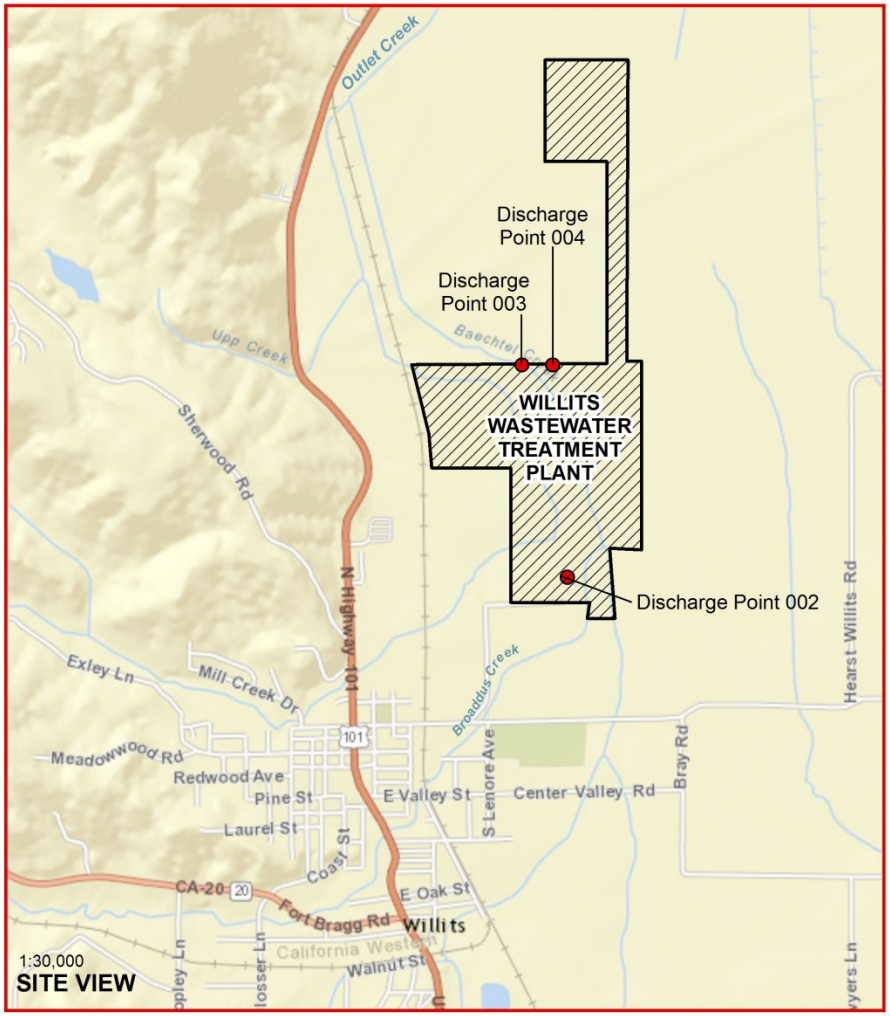

ATTACHMENT C – FACILITY SCHEMATICS

Figure C-1. Flow Schematic

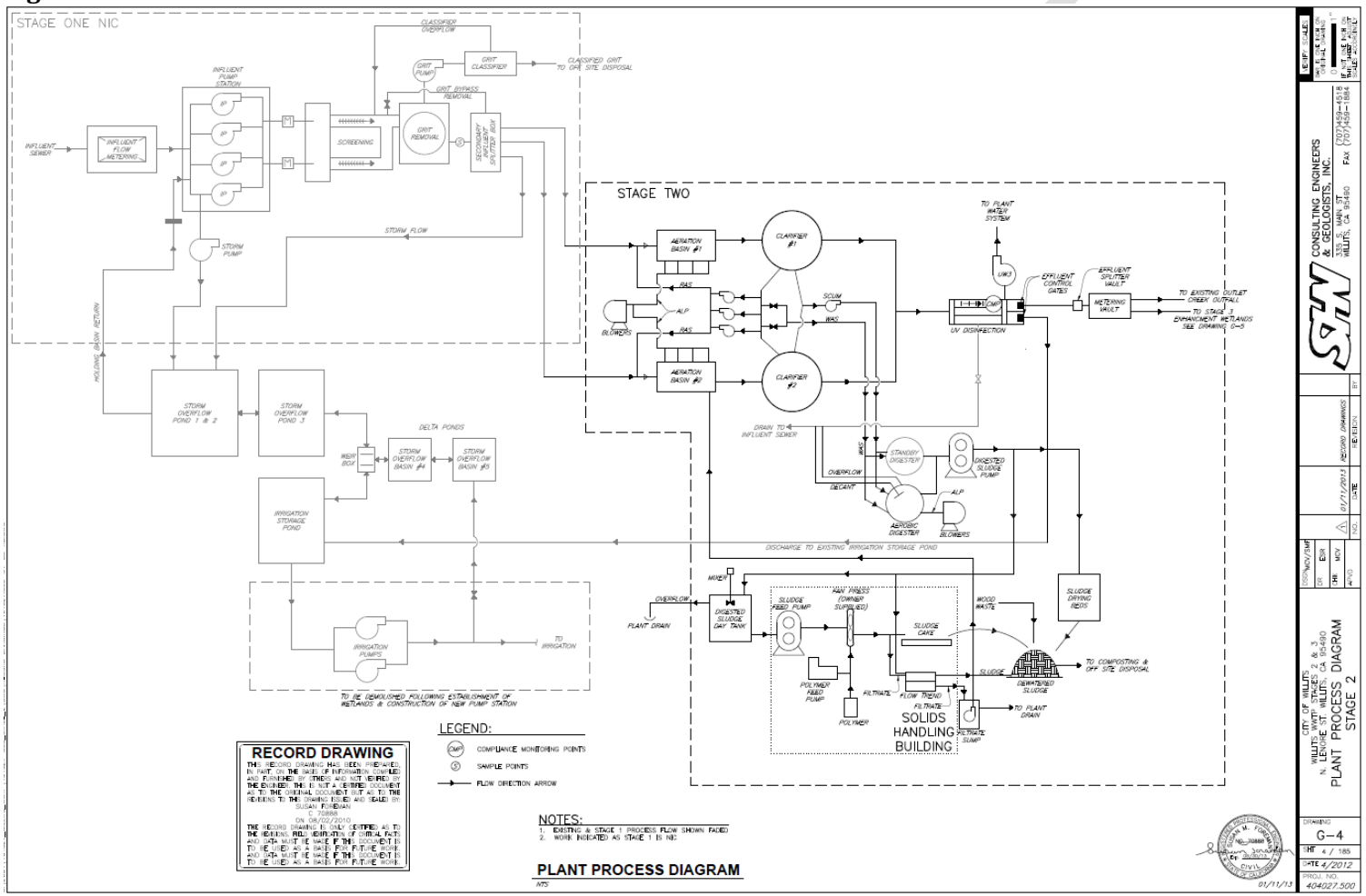

Figure C-2. Enhancement Wetland Schematic

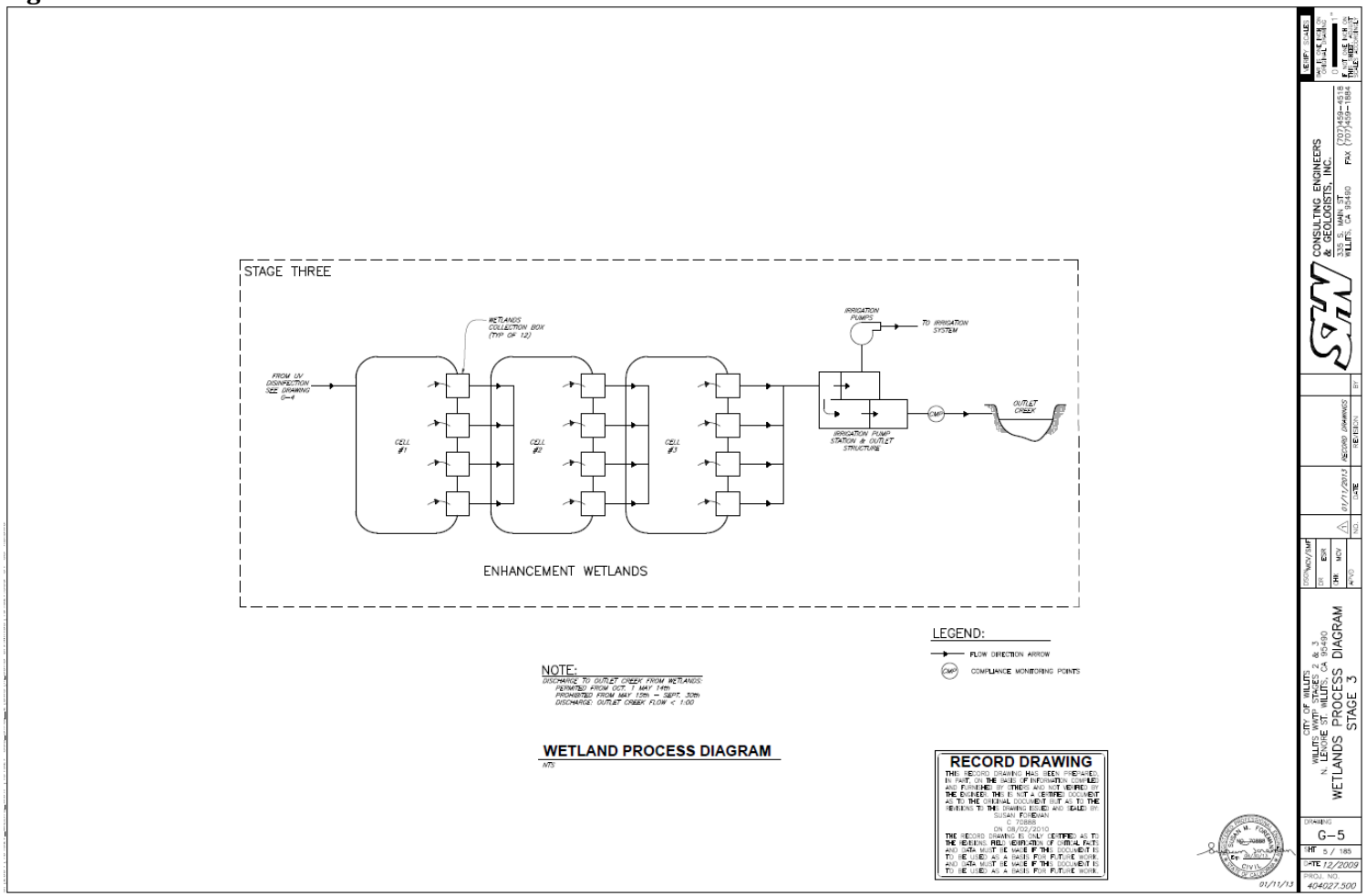

Figure C-3. Influent Monitoring Locations

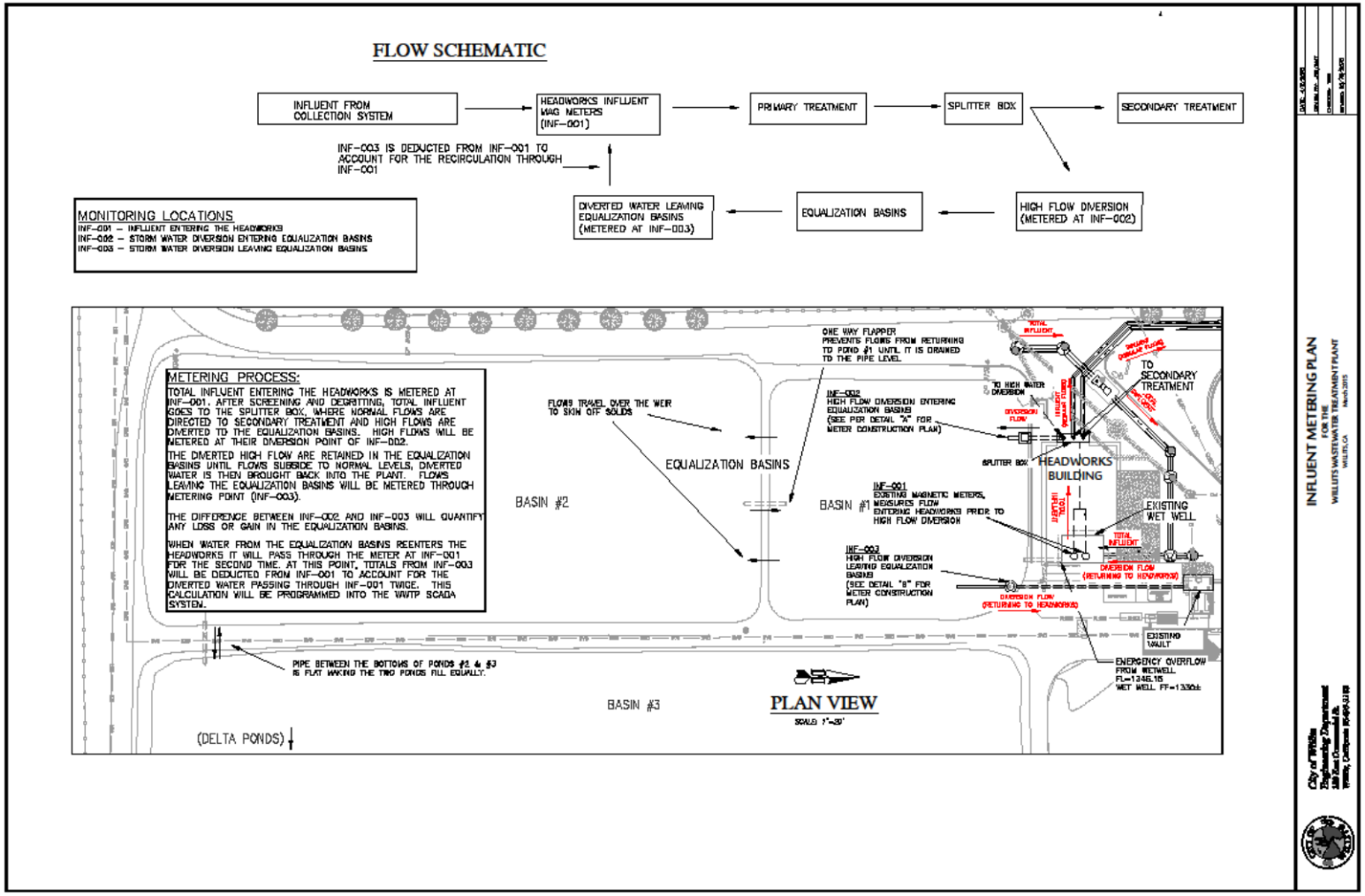

Figure C-4. Recycled Water Irrigation Locations

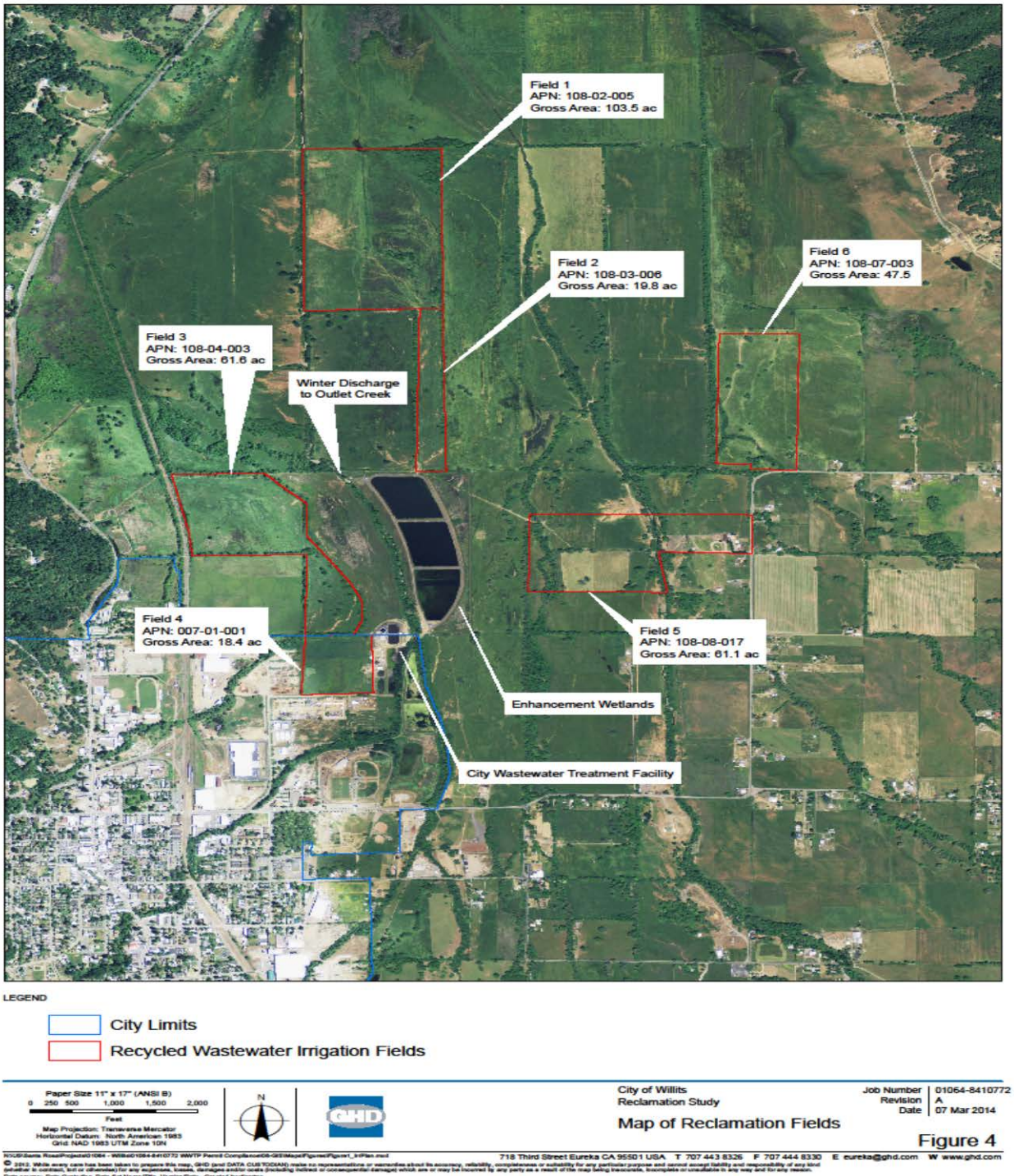

ATTACHMENT D – STANDARD PROVISIONS

I. STANDARD PROVISIONS – PERMIT COMPLIANCE

A. Duty to Comply

1. The Permittee must comply with all of the conditions of this Order. Any noncompliance constitutes a violation of the Clean Water Act (CWA) and the California Water Code and is grounds for enforcement action, for permit termination, revocation and reissuance, or modification; or denial of a permit renewal application. (40 C.F.R. § 122.41(a).)

2. The Permittee shall comply with effluent standards or prohibitions established under Section 307(a) of the CWA for toxic pollutants and with standards for sewage sludge use or disposal established under Section 405(d) of the CWA within the time provided in the regulations that establish these standards or prohibitions, even if this Order has not yet been modified to incorporate the requirement. (40 C.F.R. § 122.41(a)(1).)

B. Need to Halt or Reduce Activity Not a Defense

It shall not be a defense for a Permittee in an enforcement action that it would have been necessary to halt or reduce the permitted activity in order to maintain compliance with the conditions of this Order. (40 C.F.R. § 122.41(c).)

C. Duty to Mitigate

The Permittee shall take all reasonable steps to minimize or prevent any discharge or sludge use or disposal in violation of this Order that has a reasonable likelihood of adversely affecting human health or the environment. (40 C.F.R. § 122.41(d).)

D. Proper Operation and Maintenance

The Permittee shall at all times properly operate and maintain all facilities and systems of treatment and control (and related appurtenances) which are installed or used by the Permittee to achieve compliance with the conditions of this Order. Proper operation and maintenance also includes adequate laboratory controls and appropriate quality assurance procedures. This provision requires the operation of backup or auxiliary facilities or similar systems that are installed by a Permittee only when necessary to achieve compliance with the conditions of this Order. (40 C.F.R. § 122.41(e).)

E. Property Rights

1. This Order does not convey any property rights of any sort or any exclusive privileges. (40 C.F.R. § 122.41(g).)

2. The issuance of this Order does not authorize any injury to persons or property or invasion of other private rights, or any infringement of state or local law or regulations. (40 C.F.R. § 122.5(c).)

F. Inspection and Entry

The Permittee shall allow the Regional Water Board, State Water Board, U.S. EPA, and/or their authorized representatives (including an authorized contractor acting as their representative), upon the presentation of credentials and other documents, as may be required by law, to (40 C.F.R. § 122.41(i); Wat. Code, § 13383):

1. Enter upon the Permittee's premises where a regulated facility or activity is located or conducted, or where records are kept under the conditions of this Order (40 C.F.R. § 122.41(i)(1));

DRAFT

2. Have access to and copy, at reasonable times, any records that must be kept under the conditions of this Order (40 C.F.R. § 122.41(i)(2));

3. Inspect and photograph, at reasonable times, any facilities, equipment (including monitoring and control equipment), practices, or operations regulated or required under this Order (40 C.F.R. § 122.41(i)(3)); and

4. Sample or monitor, at reasonable times, for the purposes of assuring Order compliance or as otherwise authorized by the CWA or the Water Code, any substances or parameters at any location. (40 C.F.R. § 122.41(i)(4).)

G. Bypass

1. Definitions

   a. "Bypass" means the intentional diversion of waste streams from any portion of a treatment facility. (40 C.F.R. § 122.41(m)(1)(i).)

   b. "Severe property damage" means substantial physical damage to property, damage to the treatment facilities, which causes them to become inoperable, or substantial and permanent loss of natural resources that can reasonably be expected to occur in the absence of a bypass. Severe property damage does not mean economic loss caused by delays in production. (40 C.F.R. § 122.41(m)(1)(ii).)

2. Bypass not exceeding limitations. The Permittee may allow any bypass to occur which does not cause exceedances of effluent limitations, but only if it is for essential maintenance to assure efficient operation. These bypasses are not subject to the provisions listed in Standard Provisions – Permit Compliance I.G.3, I.G.4, and I.G.5 below. (40 C.F.R. § 122.41(m)(2).)

3. Prohibition of bypass. Bypass is prohibited, and the Regional Water Board may take enforcement action against a Permittee for bypass, unless (40 C.F.R. § 122.41(m)(4)(i)):

   a. Bypass was unavoidable to prevent loss of life, personal injury, or severe property damage (40 C.F.R. § 122.41(m)(4)(i)(A));

   b. There were no feasible alternatives to the bypass, such as the use of auxiliary treatment facilities, retention of untreated wastes, or maintenance during normal periods of equipment downtime. This condition is not satisfied if adequate back-up equipment should have been installed in the exercise of reasonable engineering judgment to prevent a bypass that occurred during normal periods of equipment downtime or preventive maintenance (40 C.F.R. § 122.41(m)(4)(i)(B)); and

   c. The Permittee submitted notice to the Regional Water Board as required under Standard Provisions – Permit Compliance I.G.5 below. (40 C.F.R. § 122.41(m)(4)(i)(C).)

4. The Regional Water Board may approve an anticipated bypass, after considering its adverse effects, if the Regional Water Board determines that it will meet the three conditions listed in Standard Provisions – Permit Compliance I.G.3 above. (40 C.F.R. § 122.41(m)(4)(ii).)

DRAFT

5. Notice

a. Anticipated bypass. If the Permittee knows in advance of the need for a bypass, it shall submit a notice, if possible at least 10 days before the date of the bypass. (40 C.F.R. § 122.41(m)(3)(i).)

b. Unanticipated bypass. The Permittee shall submit notice of an unanticipated bypass as required in Standard Provisions - Reporting V.E below (24-hour notice). (40 C.F.R. § 122.41(m)(3)(ii).)

H. Upset

Upset means an exceptional incident in which there is unintentional and temporary noncompliance with technology based permit effluent limitations because of factors beyond the reasonable control of the Permittee. An upset does not include noncompliance to the extent caused by operational error, improperly designed treatment facilities, inadequate treatment facilities, lack of preventive maintenance, or careless or improper operation. (40 C.F.R. § 122.41(n)(1).)

1. Effect of an upset. An upset constitutes an affirmative defense to an action brought for noncompliance with such technology based permit effluent limitations if the requirements of Standard Provisions – Permit Compliance I.H.2 below are met. No determination made during administrative review of claims that noncompliance was caused by upset, and before an action for noncompliance, is final administrative action subject to judicial review. (40 C.F.R. § 122.41(n)(2).)

2. Conditions necessary for a demonstration of upset. A Permittee who wishes to establish the affirmative defense of upset shall demonstrate, through properly signed, contemporaneous operating logs or other relevant evidence that (40 C.F.R. § 122.41(n)(3)):

a. An upset occurred and that the Permittee can identify the cause(s) of the upset (40 C.F.R. § 122.41(n)(3)(i));

b. The permitted facility was, at the time, being properly operated (40 C.F.R. § 122.41(n)(3)(ii));

c. The Permittee submitted notice of the upset as required in Standard Provisions – Reporting V.E.2.b below (24-hour notice) (40 C.F.R. § 122.41(n)(3)(iii)); and

d. The Permittee complied with any remedial measures required under Standard Provisions – Permit Compliance I.C above. (40 C.F.R. § 122.41(n)(3)(iv).)

3. Burden of proof. In any enforcement proceeding, the Permittee seeking to establish the occurrence of an upset has the burden of proof. (40 C.F.R. § 122.41(n)(4).)

DRAFT

II. STANDARD PROVISIONS – PERMIT ACTION

A. General

This Order may be modified, revoked and reissued, or terminated for cause. The filing of a request by the Permittee for modification, revocation and reissuance, or termination, or a notification of planned changes or anticipated noncompliance does not stay any Order condition. (40 C.F.R. § 122.41(f).)

B. Duty to Reapply

If the Permittee wishes to continue an activity regulated by this Order after the expiration date of this Order, the Permittee must apply for and obtain a new permit. (40 C.F.R. § 122.41(b).)

C. Transfers

This Order is not transferable to any person except after notice to the Regional Water Board. The Regional Water Board may require modification or revocation and reissuance of the Order to change the name of the Permittee and incorporate such other requirements as may be necessary under the CWA and the Water Code. (40 C.F.R. § 122.41(l)(3); § 122.61.)

III. STANDARD PROVISIONS – MONITORING

A. Samples and measurements taken for the purpose of monitoring shall be representative of the monitored activity. (40 C.F.R. § 122.41(j)(1).)

B. Monitoring results must be conducted according to test procedures under 40 C.F.R. part 136 or, in the case of sludge use or disposal, approved under 40 C.F.R. part 136 unless otherwise specified in 40 C.F.R. part 503 unless other test procedures have been specified in this Order. (40 C.F.R. § 122.41(j)(4); § 122.44(i)(1)(iv).)

IV. STANDARD PROVISIONS – RECORDS

A. Except for records of monitoring information required by this Order related to the Permittee's sewage sludge use and disposal activities, which shall be retained for a period of at least five years (or longer as required by 40 C.F.R. part 503), the Permittee shall retain records of all monitoring information, including all calibration and maintenance records and all original strip chart recordings for continuous monitoring instrumentation, copies of all reports required by this Order, and records of all data used to complete the application for this Order, for a period of at least three (3) years from the date of the sample, measurement, report or application. This period may be extended by request of the Regional Water Board Executive Officer at any time. (40 C.F.R. § 122.41(j)(2).)

B. Records of monitoring information shall include:

1. The date, exact place, and time of sampling or measurements (40 C.F.R. § 122.41(j)(3)(i));
2. The individual(s) who performed the sampling or measurements (40 C.F.R. § 122.41(j)(3)(ii));
3. The date(s) analyses were performed (40 C.F.R. § 122.41(j)(3)(iii));
4. The individual(s) who performed the analyses (40 C.F.R. § 122.41(j)(3)(iv));
5. The analytical techniques or methods used (40 C.F.R. § 122.41(j)(3)(v)); and
6. The results of such analyses. (40 C.F.R. § 122.41(j)(3)(vi).)

C. Claims of confidentiality for the following information will be denied (40 C.F.R. § 122.7(b)):

1. The name and address of any permit applicant or Permittee (40 C.F.R. § 122.7(b)(1)); and

DRAFT

2. Permit applications and attachments, permits and effluent data. (40 C.F.R. § 122.7(b)(2).)

V. STANDARD PROVISIONS – REPORTING

A. Duty to Provide Information

The Permittee shall furnish to the Regional Water Board, State Water Board, or U.S. EPA within a reasonable time, any information which the Regional Water Board, State Water Board, or U.S. EPA may request to determine whether cause exists for modifying, revoking and reissuing, or terminating this Order or to determine compliance with this Order. Upon request, the Permittee shall also furnish to the Regional Water Board, State Water Board, or U.S. EPA copies of records required to be kept by this Order. (40 C.F.R. § 122.41(h); Wat. Code, § 13267.)

B. Signatory and Certification Requirements

1. All applications, reports, or information submitted to the Regional Water Board, State Water Board, and/or U.S. EPA shall be signed and certified in accordance with Standard Provisions – Reporting V.B.2, V.B.3, V.B.4, and V.B.5 below. (40 C.F.R. § 122.41(k).)

2. All permit applications shall be signed by either a principal executive officer or ranking elected official. For purposes of this provision, a principal executive officer of a federal agency includes: (i) the chief executive officer of the agency, or (ii) a senior executive officer having responsibility for the overall operations of a principal geographic unit of the agency (e.g., Regional Administrators of U.S. EPA). (40 C.F.R. § 122.22(a)(3).).

3. All reports required by this Order and other information requested by the Regional Water Board, State Water Board, or U.S. EPA shall be signed by a person described in Standard Provisions – Reporting V.B.2 above, or by a duly authorized representative of that person. A person is a duly authorized representative only if:

   a. The authorization is made in writing by a person described in Standard Provisions – Reporting V.B.2 above (40 C.F.R. § 122.22(b)(1));

   b. The authorization specifies either an individual or a position having responsibility for the overall operation of the regulated facility or activity such as the position of plant manager, operator of a well or a well field, superintendent, position of equivalent responsibility, or an individual or position having overall responsibility for environmental matters for the company. (A duly authorized representative may thus be either a named individual or any individual occupying a named position.) (40 C.F.R. § 122.22(b)(2)); and

   c. The written authorization is submitted to the Regional Water Board and State Water Board. (40 C.F.R. § 122.22(b)(3).)

4. If an authorization under Standard Provisions – Reporting V.B.3 above is no longer accurate because a different individual or position has responsibility for the overall operation of the facility, a new authorization satisfying the requirements of Standard Provisions – Reporting V.B.3 above must be submitted to the Regional Water Board and State Water Board prior to or together with any reports, information, or applications, to be signed by an authorized representative. (40 C.F.R. § 122.22(c).)

5. Any person signing a document under Standard Provisions – Reporting V.B.2 or V.B.3 above shall make the following certification:

   "I certify under penalty of law that this document and all attachments were prepared under my direction or supervision in accordance with a system designed to assure that qualified personnel properly gather and evaluate the information submitted. Based on my inquiry of

DRAFT

the person or persons who manage the system or those persons directly responsible for gathering the information, the information submitted is, to the best of my knowledge and belief, true, accurate, and complete. I am aware that there are significant penalties for submitting false information, including the possibility of fine and imprisonment for knowing violations." (40 C.F.R. § 122.22(d).)

C. Monitoring Reports

1. Monitoring results shall be reported at the intervals specified in the Monitoring and Reporting Program (Attachment E) in this Order. (40 C.F.R. § 122.41(l)(4).)

2. Monitoring results must be reported on a Discharge Monitoring Report (DMR) form or forms provided or specified by the Regional Water Board or State Water Board for reporting results of monitoring of sludge use or disposal practices. (40 C.F.R. § 122.41(l)(4)(i).)

3. If the Permittee monitors any pollutant more frequently than required by this Order using test procedures approved under 40 C.F.R. part 136, or another method required for an industry-specific waste stream under 40 C.F.R. subchapters N or O, the results of such monitoring shall be included in the calculation and reporting of the data submitted in the DMR or sludge reporting form specified by the Regional Water Board. (40 C.F.R. § 122.41(l)(4)(ii).)

4. Calculations for all limitations, which require averaging of measurements, shall utilize an arithmetic mean unless otherwise specified in this Order. (40 C.F.R. § 122.41(l)(4)(iii).)

D. Compliance Schedules

Reports of compliance or noncompliance with, or any progress reports on, interim and final requirements contained in any compliance schedule of this Order, shall be submitted no later than 14 days following each schedule date. (40 C.F.R. § 122.41(l)(5).)

E. Twenty-Four Hour Reporting

1. The Permittee shall report any noncompliance that may endanger health or the environment. Any information shall be provided orally within 24 hours from the time the Permittee becomes aware of the circumstances. A written submission shall also be provided within five (5) days of the time the Permittee becomes aware of the circumstances. The written submission shall contain a description of the noncompliance and its cause; the period of noncompliance, including exact dates and times, and if the noncompliance has not been corrected, the anticipated time it is expected to continue; and steps taken or planned to reduce, eliminate, and prevent reoccurrence of the noncompliance. (40 C.F.R. § 122.41(l)(6)(i).)

2. The following shall be included as information that must be reported within 24 hours under this paragraph (40 C.F.R. § 122.41(l)(6)(ii)):

a. Any unanticipated bypass that exceeds any effluent limitation in this Order. (40 C.F.R. § 122.41(l)(6)(ii)(A).)

b. Any upset that exceeds any effluent limitation in this Order. (40 C.F.R. § 122.41(l)(6)(ii)(B).)

3. The Regional Water Board may waive the above-required written report under this provision on a case-by-case basis if an oral report has been received within 24 hours. (40 C.F.R. § 122.41(l)(6)(iii).)

F. Planned Changes

DRAFT

The Permittee shall give notice to the Regional Water Board as soon as possible of any planned physical alterations or additions to the permitted facility. Notice is required under this provision only when (40 C.F.R. § 122.41(l)(1)):

1. The alteration or addition to a permitted facility may meet one of the criteria for determining whether a facility is a new source in section 122.29(b) (40 C.F.R. § 122.41(l)(1)(i)); or
2. The alteration or addition could significantly change the nature or increase the quantity of pollutants discharged. This notification applies to pollutants that are not subject to effluent limitations in this Order. (40 C.F.R. § 122.41(l)(1)(ii).)
3. The alteration or addition results in a significant change in the Permittee's sludge use or disposal practices, and such alteration, addition, or change may justify the application of permit conditions that are different from or absent in the existing permit, including notification of additional use or disposal sites not reported during the permit application process or not reported pursuant to an approved land application plan. (40 C.F.R.§ 122.41(l)(1)(iii).)

G. Anticipated Noncompliance

The Permittee shall give advance notice to the Regional Water Board or State Water Board of any planned changes in the permitted facility or activity that may result in noncompliance with this Order's requirements. (40 C.F.R. § 122.41(l)(2).)

H. Other Noncompliance

The Permittee shall report all instances of noncompliance not reported under Standard Provisions – Reporting V.C, V.D, and V.E above at the time monitoring reports are submitted. The reports shall contain the information listed in Standard Provision – Reporting V.E above. (40 C.F.R. § 122.41(l)(7).)

I. Other Information

When the Permittee becomes aware that it failed to submit any relevant facts in a permit application, or submitted incorrect information in a permit application or in any report to the Regional Water Board, State Water Board, or U.S. EPA, the Permittee shall promptly submit such facts or information. (40 C.F.R. § 122.41(l)(8).)

DRAFT

VI. STANDARD PROVISIONS – ENFORCEMENT

The Regional Water Board is authorized to enforce the terms of this permit under several provisions of the Water Code, including, but not limited to, sections 13385, 13386, and 13387.

VII. ADDITIONAL PROVISIONS – NOTIFICATION LEVELS

A. Publicly-Owned Treatment Works (POTWs)

All POTWs shall provide adequate notice to the Regional Water Board of the following (40 C.F.R. § 122.42(b)):

1. Any new introduction of pollutants into the POTW from an indirect discharger that would be subject to sections 301 or 306 of the CWA if it were directly discharging those pollutants (40 C.F.R. § 122.42(b)(1)); and

2. Any substantial change in the volume or character of pollutants being introduced into that POTW by a source introducing pollutants into the POTW at the time of adoption of this Order (40 C.F.R. § 122.42(b)(2)).

3. Adequate notice shall include information on the quality and quantity of effluent introduced into the POTW as well as any anticipated impact of the change on the quantity or quality of effluent to be discharged from the POTW. (40 C.F.R. § 122.42(b)(3)):

DRAFT

ATTACHMENT E – MONITORING AND REPORTING PROGRAM

Contents

I. General Monitoring Provisions E-2
II. Monitoring Locations E-3
III. Influent Monitoring Requirements E-3
  A. Monitoring Location INF-001 ..... E-4
  B. Monitoring Location INF-002 ..... E-4
  C. Monitoring Location INF-003 ..... E-4
IV. Effluent Monitoring Requirements E-4
  A. Monitoring Location EFF-002 ..... E-4
  B. Monitoring Location EFF-003 ..... E-5
V. Whole Effluent Toxicity Testing Requirements E-6
  A. Acute Toxicity Testing E-6
  B. Chronic Toxicity Testing E-8
VI. Land Discharge Monitoring Requirements – Not Applicable E-12
VII. Recycling Monitoring Requirements E-12
  A. Monitoring Location EFF-004 ..... E-12
  B. Recycled Water Production and Use E-13
VIII. Receiving Water Monitoring Requirements – Surface Water and Groundwater E-13
  A. Monitoring Location RSW-001 ..... E-13
  B. Monitoring Locations RSW-003 and RSW-004 ..... E-14
  C. Groundwater Monitoring – Not Required E-14
IX. Other Monitoring Requirements E-15
  A. Disinfection Process Monitoring for UV Disinfection System E-15
  B. Septage Station Monitoring E-15
X. Reporting Requirements E-16
  A. General Monitoring and Reporting Requirements E-16
  B. Self-Monitoring Reports (SMRs) E-16
  C. Discharge Monitoring Reports (DMRs) E-18
  D. Other Reports E-18
  E. Spill Notification E-23

Tables

Table E-1. Test Methods and Minimum Levels for Priority Pollutants E-2
Table E-2. Monitoring Station Locations E-3
Table E-3. Influent Monitoring – Monitoring Location INF-001 ..... E-4
Table E-4. Influent Monitoring – Monitoring Location INF-002 ..... E-4
Table E-5. Influent Monitoring – Monitoring Location INF-003 ..... E-4
Table E-6. Effluent Monitoring – Monitoring Location EFF-002 ..... E-4
Table E-7. Effluent Monitoring – Monitoring Location EFF-003 ..... E-5
Table E-8. Recycled Water Monitoring – Monitoring Location EFF-004 ..... E-12
Table E-9. Recycled Water Production and Use E-13
Table E-10. Receiving Water Monitoring – Monitoring Location RSW-001 ..... E-13
Table E-11. Receiving Water Monitoring – Monitoring Locations RSW-003 and RSW-004 ..... E-14
Table E-12. Septage Monitoring – Monitoring Location SEP-001 ..... E-15
Table E-13. Monitoring Periods and Reporting Schedule E-16
Table E-14. Reporting Requirements for Special Provisions Reports E-19

DRAFT

ATTACHMENT E – MONITORING AND REPORTING PROGRAM (MRP)

The Code of Federal Regulations (40 C.F.R. § 122.48) requires that all NPDES permits specify monitoring and reporting requirements. California Water Code section 13383 also authorizes the Regional Water Board to require technical and monitoring reports. This MRP establishes monitoring and reporting requirements that implement federal and California regulations.

I. GENERAL MONITORING PROVISIONS

A. Wastewater Monitoring Provision. Composite samples may be taken by a proportional sampling device approved by the Executive Officer or by grab samples composited in proportion to flow. In compositing grab samples, the sampling interval shall not exceed 1 hour.

B. Supplemental Monitoring Provision. If the Permittee monitors any pollutant more frequently than required by this Order, using test procedures approved by 40 C.F.R. part 136 or as specified in this Order, the results of such monitoring shall be included in the calculation and reporting of the data submitted in the monthly and annual discharge monitoring reports.

C. Data Quality Assurance Provision. Laboratories analyzing monitoring samples shall be certified by the State Water Resources Control Board (State Water Board), Division of Drinking Water (DDW) in accordance with the provisions of Water Code section 13176, and must include quality assurance / quality control data with their analytical reports.

D. Instrumentation and Calibration Provision. All monitoring instruments and devices used by the Permittee to fulfill the prescribed monitoring program shall be properly maintained and calibrated as necessary to ensure their continued accuracy. All flow measurement devices shall be calibrated no less than the manufacturer's recommended intervals or one year intervals, (whichever comes first) to ensure continued accuracy of the devices.

E. Minimum Levels (ML) and Reporting Levels (RL). Compliance and reasonable potential monitoring analyses shall be conducted using commercially available and reasonably achievable detection limits that are lower than the applicable effluent limitations and/or water quality criteria. If no Minimum Level (ML) value is below these levels, the lowest ML shall be selected as the Reporting Level (RL). Table E-1 lists the test methods the Permittee may use for compliance and reasonable potential monitoring to analyze priority pollutants with effluent limitations or specific monitoring requirements. Appendix 4 of the *Policy for Implementation of Toxics Standards for Inland Surface Waters, Enclosed Bays, and Estuaries of California* (State Implementation Policy or SIP) lists the test methods the Permittee may use for reasonable potential monitoring to analyze priority pollutants.

Table E-1. Test Methods and Minimum Levels for Priority Pollutants

CTR #	Constituent	Types of Analytical Methods MLs (µg/L)		
		Inductively Coupled Plasma/Mass Spectrometry	Stabilized Platform Graphite Furnace Atomic Absorption	Gas Chromatography/Mass Spectrometry
6	Copper, Total Recoverable	0.5	2	--
68	Bis (2-Ethylhexyl) Phthalate	--	--	5

DRAFT

II. MONITORING LOCATIONS

The Permittee shall establish the following monitoring locations to demonstrate compliance with the effluent limitations, discharge specifications, and other requirements in this Order:

Table E-2. Monitoring Station Locations

Discharge Point Name	Monitoring Location Name	Monitoring Location Description
--	INF-001[1]	Influent at the headworks of the wastewater treatment facility (WWTF) prior to treatment and consisting of wastewater from both the collection system and septage receiving station (see Attachment C, Figure C-3).
--	INF-002	Influent diverted from the secondary influent splitter box to the equalization basins (see Attachment C, Figure C-3).
--	INF-003	Influent returned from the equalization basins to the headworks (see Attachment C, Figure C-3).
002	EFF-002	Treated effluent from the mechanical portion of the WWTF downstream of the disinfection processes.
003	EFF-003	Treated effluent from the WWTF downstream of the enhancement wetland and prior to contact with the receiving water.
004	EFF-004	Treated effluent from the WWTF downstream of the enhancement wetland and prior to effluent application to reclamation use area(s).
--	RSW-001	Outlet Creek surface water at the confluence of Baechtel and Broaddus Creeks upstream of and beyond the influence of the discharge.
--	RSW-003	Outlet Creek surface water at the point of discharge of Discharge Point 003.
--	RSW-004[2]	Outlet Creek surface water approximately 500 feet downstream of Discharge Point 003.
--	INT-001	Location for calculating ultraviolet (UV) radiation dose and UV transmittance of the UV disinfection system.
--	SEP-001	Septage receiving station after complete mixing of septage wastes and prior to the WWTF headworks.

Table Notes:

1. The Permittee monitors the influent for flow prior to the influent pump station wet well chamber and for all other constituents from the aerated grit chamber. For the purposes of this Order, monitoring at these locations shall be reported at Monitoring Location INF-001.
2. Upon written request from the Permittee and subsequent approval from the Executive Officer, the exact location of Monitoring Location RSW-004 may be changed to best reflect site-specific needs and/or conditions.

III. INFLUENT MONITORING REQUIREMENTS

Total influent shall be metered at INF-001. During periods when high influent flows are diverted to the equalization basins, diverted flow shall be measured at INF-002. Flows returning from the equalization basins shall be measured at INF-003 then measured for a second time at INF-001. In order to account for flows passing through INF-001 twice, the flows passing through INF-003 shall be automatically subtracted from the measured value at INF-001.

DRAFT

A. Monitoring Location INF-001

1. The Permittee shall monitor influent to the Facility at Monitoring Location INF-001 as follows:

Table E-3. Influent Monitoring – Monitoring Location INF-001

Parameter	Units	Sample Type	Minimum Sampling Frequency	Required Analytical Test Method
Influent Flow[1]	mgd	Meter	Continuous	--
Biochemical Oxygen Demand 5-day @ 20°C (BOD_5)	mg/L	24-hr Composite	Weekly[2]	Standard Methods[3]
Total Suspended Solids (TSS)	mg/L	24-hr Composite	Weekly[2]	Standard Methods

Table Notes:
1. Each month, the Permittee shall report average daily and average monthly flows
2. Monitoring of BOD_5 and TSS in the influent shall occur near simultaneously with effluent monitoring for the same parameters.
3. In accordance with the current edition of *Standard Methods for Examination of Water and Wastewater* (American Public Health Administration) or current test procedures specified in 40 C.F.R. part 136.

B. Monitoring Location INF-002

1. The Permittee shall monitor influent diverted from the secondary influent splitter box to the equalization basins at Monitoring Location INF-002 as follows:

Table E-4. Influent Monitoring – Monitoring Location INF-002

Parameter	Units	Sample Type	Minimum Sampling Frequency	Required Analytical Test Method
Flow[1]	mgd	Meter	Continuous	--

Table Notes:
1. Each month, the Permittee shall report average daily and average monthly flows.

C. Monitoring Location INF-003

1. The Permittee shall monitor influent diverted from the equalization basins to the headworks at Monitoring Location INF-003 as follows:

Table E-5. Influent Monitoring – Monitoring Location INF-003

Parameter	Units	Sample Type	Minimum Sampling Frequency	Required Analytical Test Method
Flow[1]	mgd	Meter	Continuous	--

Table Notes:
1. Each month, the Permittee shall report average daily and average monthly flows.

IV. EFFLUENT MONITORING REQUIREMENTS

A. Monitoring Location EFF-002

1. The Permittee shall monitor effluent from the mechanical treatment system at Monitoring Location EFF-002 as follows:

Table E-6. Effluent Monitoring – Monitoring Location EFF-002

Parameter	Units	Sample Type	Minimum Sampling Frequency	Required Analytical Test Method
Effluent Flow[1]	mgd	Meter	Continuous	--

DRAFT

Parameter	Units	Sample Type	Minimum Sampling Frequency	Required Analytical Test Method
Biochemical Oxygen Demand 5-day @ 20°C (BOD_5)	mg/L	24-hr Composite	Weekly[2]	Standard Methods[3]
Total Suspended Solids (TSS)	mg/L	24-hr Composite	Weekly[2]	Standard Methods
pH	s.u.	Grab	Weekly[2,4]	Standard Methods
Temperature	°C	Grab	Monthly[4]	Standard Methods
Total Coliform Bacteria	MPN/100 mL	Grab	Weekly[2]	Standard Methods
Ammonia Nitrogen, Total (as N)	mg/L	Grab	Monthly	Standard Methods
Nitrate Nitrogen, Total (as N)	mg/L	Grab	Monthly	Standard Methods
Nitrite Nitrogen, Total (as N)	mg/L	Grab	Monthly	Standard Methods
Organic Nitrogen	mg/L	Grab	Monthly	Standard Methods
Nitrogen, Total (as N)	mg/L	Calculate	Monthly[5]	Standard Methods
Total Dissolved Solids	mg/L	Grab	Monthly	Standard Methods

Table Notes:

1. Each month, the Permittee shall report the daily average and monthly average flows.
2. Accelerated Monitoring Weekly Samples. If two consecutive weekly test results exceed an effluent limitation, the Permittee shall take two samples each of the two weeks following receipt of the second sample result. During the intervening period, the Permittee shall take steps to identify the cause of the exceedance and take steps to return to compliance.
3. In accordance with the current edition of *Standard Methods for Examination of Water and Wastewater* (American Public Health Administration) or current test procedures specified in 40 C.F.R. part 136.
4. pH and temperature monitoring must coincide with monthly monitoring for ammonia.
5. Accelerated Monitoring. If the test result exceeds an effluent limitation the Permittee shall take two more samples, one within 14 days and one within 21 days following receipt of the initial sample result. During the intervening period, the Permittee shall take steps to identify the pollutant source and take steps needed to return to compliance.

B. Monitoring Location EFF-003

1. The Permittee shall monitor effluent from the enhancement wetland at Monitoring Location EFF-003 during periods of discharge as follows:

Table E-7. Effluent Monitoring – Monitoring Location EFF-003

Parameter	Units	Sample Type	Minimum Sampling Frequency	Required Analytical Test Method
Effluent Flow[1]	mgd	Meter	Continuous	--
Discharge Rate	%	Calculate[2]	1/Day	--
Settleable Solids	mL/L	24-hr Composite	Weekly[3]	Standard Methods[4]
pH	s.u.	Grab	Weekly[3,5]	Standard Methods
Temperature	°C	Grab	Monthly[5]	Standard Methods
Bis (2-Ethylhexyl) Phthalate	µg/L	Grab	Monthly[6]	GCMS (ML 5 µg/L)[7]
Copper, Total Recoverable	µg/L	Grab	Monthly[6]	ICPMS (ML 0.5 µg/L), SPGFAA (2 µg/L)[7]
Ammonia Nitrogen, Total (as N)	mg/L	Grab	Monthly[6]	Standard Methods
Nitrate Nitrogen, Total (as N)	mg/L	Grab	Monthly	Standard Methods

DRAFT

Parameter	Units	Sample Type	Minimum Sampling Frequency	Required Analytical Test Method
Nitrite Nitrogen, Total (as N)	mg/L	Grab	Monthly	Standard Methods
Organic Nitrogen	mg/L	Grab	Monthly	Standard Methods
Nitrogen, Total (as N)	mg/L	Calculate	Monthly[6]	Standard Methods
Hardness, Total (as $CaCO_3$)	mg/L	Grab	Monthly	Standard Methods
Phosphorus, Total (as P)	mg/L	Grab	Monthly	Standard Methods
Acute Toxicity	% Survival, Pass or Fail, and % Effect	24-hr Composite	2X/Year[8]	See Section V below
Chronic Toxicity[9]	Pass or Fail and % Effect	24-hr Composite	2X/Year[8]	See Section V below
CTR Priority Pollutants[10]	µg/L	Grab	Annually	Standard Methods[11]

Table Notes:

1. Each month, the Permittee shall report the daily average and monthly average flows.
2. The Permittee shall calculate and report the discharge rate as a percent of the upstream receiving water flow, as measured at Monitoring Location RSW-001.
3. Accelerated Monitoring Weekly Samples. If two consecutive weekly test results exceed an effluent limitation, the Permittee shall take two samples each of the two weeks following receipt of the second sample result. During the intervening period, the Permittee shall take steps to identify the cause of the exceedance and take steps to return to compliance.
4. In accordance with the current edition of Standard Methods for Examination of Water and Wastewater (American Public Health Administration) or current test procedures specified in 40 C.F.R. part 136.
5. pH and temperature monitoring must coincide with monthly monitoring for ammonia.
6. Accelerated Monitoring. If the test result exceeds an effluent limitation the Permittee shall take two more samples, one within 14 days and one within 21 days following receipt of the initial sample result. During the intervening period, the Permittee shall take steps to identify the pollutant source and take steps needed to return to compliance.
7. GSMS = Gas Chromatography / Mass Spectrometry
   ICPMS = Inductively Coupled Plasma / Mass Spectrometry
   SPGFAA = Stabilized Platform Graphite Furnace Atomic Absorption
8. Monitoring shall occur during the first month of surface water discharge and during the second consecutive month thereafter (i.e., if monitoring occurs in November, consecutive monitoring shall be performed in January).
9. The median monthly summary result shall be reported as "Pass" or "Fail". The maximum daily single result shall be reported as "Pass" or "Fail" with a "% Effect". Exactly three independent toxicity results are required when one toxicity test results in "Fail". Refer to section V.B.8 for accelerated monitoring.
10. Those pollutants identified by the California Toxics Rule at 40 C.F.R. section 131.38. The Permittee is not required to sample and analyze for asbestos. Hardness shall be monitored concurrently with the annual priority pollutant sample.
11. Analytical methods must achieve the lowest minimum level (ML) specified in Appendix 4 of the SIP and, in accordance with section 2.4 of the SIP, the Permittee shall report the ML and MDL for each sample result.

V. WHOLE EFFLUENT TOXICITY TESTING REQUIREMENTS

A. Acute Toxicity Testing

The Permittee shall conduct acute whole effluent toxicity testing (WET) in accordance with the following acute toxicity testing requirements.

1. **Test Frequency.** The Permittee shall conduct acute WET testing in accordance with the schedule established by this MRP while discharging at Discharge Point 003, as summarized in Table E-7, above.

2. **Discharge In-stream Waste Concentration (IWC) for Acute Toxicity.** The IWC for this discharge is 100 percent effluent.

DRAFT

3. **Sample Volume and Holding Time.** The total sample volume shall be determined by the specific toxicity test method used. Sufficient sample volume shall be collected to perform the required toxicity test. All toxicity tests shall be conducted as soon as possible following sample collection. No more than 36 hours shall elapse before the conclusion of sample collection and test initiation.

4. **Freshwater Test Species and Test Methods.** The Permittee shall conduct the following acute toxicity tests in accordance with species and test methods in *Methods for Measuring the Acute Toxicity of Effluents and Receiving Waters to Freshwater and Marine Organisms* (U.S. EPA Report No. EPA-821-R-02-012, 5th edition or subsequent editions). In no case shall these species be substituted with another test species unless written authorization from the Executive Officer is received.

   a. A 96-hour static renewal or 96-hour static non-renewal toxicity test with an invertebrate, the water flea, *Ceriodaphnia dubia* (Survival Test Method 2002.0).

   b. A 96-hour static renewal or 96-hour static non-renewal toxicity test with a vertebrate, the rainbow trout, *Oncorhynchus mykiss* (Survival Test Method 2019.0).

5. **Species Sensitivity Screening.** Species sensitivity screening shall be conducted during this permit's first required sample collection. The Permittee shall collect a single effluent sample and concurrently conduct two toxicity tests using the invertebrate and fish species identified in section V.A.4, above. This sample shall also be analyzed for the parameters required for the discharge. The species that exhibits the highest "Percent (%) Effect" at the discharge IWC during species sensitivity screening shall be used for routine monitoring during the permit term.

6. **Quality Assurance and Additional Requirements.** Quality assurance measures, instructions, and other recommendations and requirements are found in the test methods manual previously referenced. Additional requirements are specified below.

   a. The discharge is subject to determination of "Pass" or "Fail" and "Percent (%) Effect" from an acute toxicity test using the Test of Significant Toxicity (TST) approach described in *National Pollutant Discharge Elimination System Test of Significant Toxicity Implementation Document* (EPA 833-R10-003, 2010), Appendix A, Figure A-1, and Table A-1. The null hypothesis (Ho) for the TST approach is: Mean discharge IWC response 0.80 × Mean control response. A test result that rejects this null hypothesis is reported as "Pass". A test result that does not reject this null hypothesis is reported as "Fail". The relative "Percent (%) Effect" at the discharge IWC is defined and reported as: ((Mean control response Mean discharge IWC response) ÷ Mean control response)) × 100.

   b. If the effluent toxicity test does not meet all test acceptability criteria (TAC) specified in the referenced test method, then the Permittee must re-sample and re-test within 7 days.

   c. Dilution water and control water shall be laboratory water prepared and used as specified in the test methods manual. If dilution water and control water is different from test organism culture water, then a second control using culture water shall also be used.

   d. Test procedures related to pH control, sample filtration, aeration, temperature control and sample dechlorination shall be performed in accordance with the U.S. EPA method and fully explained and justified in each acute toxicity report submitted to the Regional Water Board. The control of pH in acute toxicity tests is allowed, provided the test pH is maintained at the effluent pH measured at the time of sample collection, and the

DRAFT

control of pH is done in a manner that has the least influence on the test water chemistry and on the toxicity of other pH sensitive materials such as some heavy metals, sulfide and cyanide.

e. **Ammonia Toxicity.** The acute toxicity test shall be conducted without modifications to eliminate ammonia toxicity.

7. **Notification.** The Permittee shall notify the Regional Water Board verbally within 72 hours and in writing 14 days after receipt of test results exceeding the acute toxicity effluent limitation during regular or accelerated monitoring. The notification shall describe actions the Permittee has taken or will take to investigate and correct the cause(s) of toxicity. It may also include a status report on any actions required by this Order, with a schedule for actions not yet completed. If no actions have been taken, the reasons shall be given.

8. **Accelerated Monitoring Requirements.** If the result of any acute toxicity test fails to meet the single test minimum limitation (70 percent survival), and the testing meets all test acceptability criteria, the Permittee shall take two more samples, one within 14 days and one within 21 days following receipt of the initial sample result. If any one of the additional samples do not comply with the three sample median minimum limitation (90 percent survival), the Permittee shall initiate a Toxicity Reduction Evaluation (TRE) in accordance with section V.B.9 of the MRP. If the two additional samples are in compliance with the acute toxicity requirement and testing meets all test acceptability criteria, then a TRE will not be required. If the discharge stops before additional samples can be collected, the Permittee shall contact the Executive Officer within 21 days with a plan to demonstrate compliance with the effluent limitation.

9. **Reporting.** The Self-Monitoring Report (SMR) shall include a full laboratory report for each toxicity test. This report shall be prepared using the format and content of section 12 (Report Preparation) of *Methods for Measuring the Acute Toxicity of Effluents and Receiving Waters to Freshwater and Marine Organisms* (U.S. EPA Report No. EPA-821-R-02-012, 5th edition or subsequent editions), including:

   a. The toxicity test results in percent (%) survival for the 100 percent effluent sample.

   b. The toxicity test results for the TST approach, reported as "Pass" or "Fail" and "Percent (%) Effect" at the acute toxicity IWC for the discharge.

   c. Water quality measurements for each toxicity test (e.g., pH, dissolved oxygen, temperature, conductivity, hardness, salinity, chlorine, ammonia).

   d. TRE/TIE results. The Executive Officer shall be notified no later than 30 days from completion of each aspect of TRE/TIE analyses.

   e. Statistical program (e.g., TST calculator, CETIS, etc.) output results for each toxicity test.

B. Chronic Toxicity Testing

The Permittee shall conduct chronic toxicity testing in accordance with the following chronic toxicity testing requirements:

1. **Test Frequency.** The Permittee shall conduct chronic toxicity testing in accordance with the schedule established by this MRP while discharging at Discharge Point 003, as summarized in Table E-7, above.

2. **Discharge In-stream Waste Concentration (IWC) for Chronic Toxicity.** The chronic toxicity IWC for this discharge is 100 percent effluent.

DRAFT

3. **Sample Volume and Holding Time.** The total sample volume shall be determined by the specific toxicity test method used. Sufficient sample volume shall be collected to perform the required toxicity test. All toxicity tests shall be conducted as soon as possible following sample collection. No more than 36 hours shall elapse before the conclusion of sample collection and test initiation.

4. **Freshwater Test Species and Test Methods.** The Permittee shall conduct the following chronic toxicity tests in accordance with species and test methods in *Short-Term Methods for Estimating the Chronic Toxicity of Effluents and Receiving Water to Freshwater Organisms* (U.S. EPA Report No. EPA-821-R-02-013, or subsequent editions). In no case shall these species be substituted with another test species unless written authorization from the Executive Officer is received.

   a. A 96-hour static renewal or static non-renewal toxicity test with a vertebrate, the fathead minnow, *Pimephales promelas* (Larval Survival and Growth Test Method 1000.0).

   b. A 96-hour static renewal or static non-renewal toxicity test with an invertebrate, the water flea, *Ceriodaphnia dubia* (Survival and Reproduction Test Method 1002.01).

   c. A 96-hour static renewal or static non-renewal toxicity test with a plant, the green algae, *Selenastrum capricornutum* (also named *Raphidocelis subcapitata)* (Growth Test Method 1003.0).

5. **Species Sensitivity Screening.** Species sensitivity screening shall be conducted during this permit's first required sample collection. The Permittee shall collect a single effluent sample and concurrently conduct three toxicity tests using the fish, the invertebrate, and the alga species identified in section V.B.4, above. This sample shall also be analyzed for the parameters required for the discharge. The species that exhibits the highest "Percent (%) Effect" at the discharge IWC during species sensitivity screening shall be used for routine monitoring during the permit term.

6. **Quality Assurance and Additional Requirements.** Quality assurance measures, instructions, and other recommendations and requirements are found in the test methods manual previously referenced. Additional requirements are specified below.

   a. The discharge is subject to determination of "Pass" or "Fail" and "Percent (%) Effect" from a chronic toxicity test using the TST approach described in *National Pollutant Discharge Elimination System Test of Significant Toxicity Implementation Document* (EPA 833-R10-003, 2010), Appendix A, Figure A-1, and Table A-1. The null hypothesis (H_o) for the TST approach is: Mean discharge IWC response 0.75 × Mean control response. A test result that rejects this null hypothesis is reported as "Pass". A test result that does not reject this null hypothesis is reported as "Fail". The relative "Percent (%) Effect" at the discharge IWC is defined and reported as: ((Mean control response Mean discharge IWC response) ÷ Mean control response)) × 100.

   b. If the effluent toxicity test does not meet all TAC specified in the referenced test method, then the Permittee must re-sample and re-test within 14 days.

   c. Dilution water and control water shall be laboratory water prepared and used as specified in the test methods manual. For the *Selenastrum capricornutum* test, synthetic laboratory water with a hardness similar to the receiving water shall be used as the control and dilution water. If dilution water and control water is different from test organism culture water, then a second control using culture water shall also be used.

DRAFT

d. Monthly reference toxicant testing shall be performed. All reference toxicant test results should be reviewed and reported.

e. The Permittee shall perform toxicity tests on final effluent samples. Chlorine and ammonia shall not be removed from the effluent sample prior to toxicity testing, unless explicitly authorized under this section of the MRP and the rationale is explained in the Fact Sheet (Attachment F).

f. **Ammonia Removal.** Except with prior approval from the Executive Officer of the Regional Water Board, ammonia shall not be removed from bioassay samples. The Permittee must demonstrate the effluent toxicity is caused by ammonia because of increasing test pH when conducting the toxicity test. It is important to distinguish the potential toxic effects of ammonia from other pH sensitive chemicals, such as certain heavy metals, sulfide, and cyanide. The following conditions and steps may be used to demonstrate that the toxicity is caused by ammonia and not other toxicants before the Executive Officer would allow for control of pH in the test.

i. There is consistent toxicity in the effluent and the maximum pH in the toxicity test is in the range to cause toxicity due to increased pH.

ii. Chronic ammonia concentrations in the effluent are greater than 4 mg/L total ammonia.

iii. Conduct graduated pH tests as specified in the toxicity identification evaluation (TIE) methods. For example, mortality should be higher at pH 8 and lower at pH 6.

iv. Treat the effluent with a zeolite column to remove ammonia. Mortality in the zeolite treated effluent should be lower than the non-zeolite treated effluent. Then add ammonia back to the zeolite-treated samples to confirm toxicity due to ammonia.

When it has been demonstrated that toxicity is due to ammonia because of increasing test pH, pH may be controlled using appropriate procedures which do not significantly alter the nature of the effluent.

7. **Notification.** The Permittee shall notify the Regional Water Board verbally within 72 hours and in writing within 14 days after the receipt of test results exceeding a median monthly summary result of "Fail" during routine monitoring or a single test result of "Fail" during accelerated monitoring.

8. **Accelerated Monitoring Requirements.** Within 24 hours of the time the Permittee becomes aware of a summary result "Fail", the Permittee shall implement an accelerated monitoring schedule consisting of four toxicity tests—consisting of 5-effluent concentrations (including the discharge IWC) and a control—conducted at approximately 2 week intervals, over an 8 week period. If each of the accelerated toxicity tests results is "Pass," the Permittee shall return to routine monitoring for the next monitoring period. If one of the accelerated toxicity tests results in "Fail", the Permittee shall immediately implement the Toxicity Reduction Evaluation (TRE) Process conditions set forth below.

9. **Toxicity Reduction Evaluation (TRE) Process**

a. **Preparation and Implementation of a Detailed TRE Work Plan.** The Permittee shall immediately initiate a TRE using, according to type of treatment facility, EPA manual *Generalized Methodology for Conducting Industrial Toxicity Reduction Evaluations* (EPA/600/2-88/070, 1989) and within 30 days submit to the Regional Water Board Executive Officer a detailed TRE Work Plan, which shall follow the generic initial investigation TRE Work Plan revised as appropriate for the toxicity

DRAFT

event described in section V.B.8 of Attachment E of this order. It shall include the following information, and comply with additional conditions set by the Regional Water Board Executive Officer:

i. Further actions by the Permittee to investigate, identify, and correct causes of toxicity.

ii. Actions the Permittee will take to mitigate effects of the discharge and prevent the recurrence of toxicity.

iii. A schedule for these actions, progress reports, and the final report.

b. **TIE Implementation.** The Permittee may initiate a TIE as part of a TRE to identify the causes of toxicity using the same species and test methods and, as guidance, EPA manuals: *Methods for Aquatic Toxicity Identification Evaluations: Phase I Toxicity Characterization Procedures* (EPA/600/6-91/003, 1991); *Methods for Aquatic Toxicity Identification Evaluations, Phase II Toxicity Identification Procedures for Samples Exhibiting Acute and Chronic Toxicity* (EPA/600/R-92/080, 1993); *Methods for Aquatic Toxicity Identification Evaluations, Phase III Toxicity Confirmation Procedures for Samples Exhibiting Acute and Chronic Toxicity* (EPA/600/R-92/081, 1993); and *Marine Toxicity Identification Evaluation (TIE): Phase I Guidance Document* (EPA/600/R-96-054, 1996). The TIE should be conducted on the species demonstrating the most sensitive toxicity response.

c. Many recommended TRE elements parallel required or recommended efforts for source control, pollution prevention, and storm water control programs. TRE efforts should be coordinated with such efforts. As toxic substances are identified or characterized, the Permittee shall continue the TRE by determining the sources and evaluating alternative strategies for reducing or eliminating the substances from the discharge. All reasonable steps shall be taken to reduce toxicity to levels consistent with toxicity evaluation parameters.

d. The Permittee shall conduct routine effluent monitoring for the duration of the TRE process. Additional accelerated monitoring and TRE work plans are not required once a TRE has begun.

e. The Regional Water Board recognizes that toxicity may be episodic and identification of the causes and reduction of sources of toxicity may not be successful in all cases. The TRE may be ended at any stage if monitoring finds there is no longer toxicity.

10. **Reporting.** The SMR shall include a full laboratory report for each toxicity test. This report shall be prepared using the format and content of the test methods manual chapter called Report Preparation, including:

a. The toxicity test results for the TST approach, reported as "Pass" or "Fail" and "Percent (%) Effect" at the chronic toxicity IWC for the discharge.

b. Water quality measurements for each toxicity test (e.g., pH, dissolved oxygen, temperature, conductivity, hardness, salinity, chlorine, ammonia).

c. TRE/TIE results. The Executive Officer shall be notified no later than 30 days from completion of each aspect of TRE/TIE analyses.

d. Statistical program (e.g., TST calculator, CETIS, etc.) output results for each toxicity test.

DRAFT

VI. LAND DISCHARGE MONITORING REQUIREMENTS – NOT APPLICABLE

This Order does not authorize discharges of waste to land.

VII. RECYCLING MONITORING REQUIREMENTS

A. Monitoring Location EFF-004

1. The Permittee shall monitor effluent from the enhancement wetland at Monitoring Location EFF-004 during periods of application to reclamation use area(s) as follows:

Table E-8. Recycled Water Monitoring – Monitoring Location EFF-004

Parameter	Units	Sample Type	Minimum Sampling Frequency	Required Analytical Test Method
Effluent Flow[1]	mgd	Meter	Continuous	--
pH	s.u.	Grab	Weekly	Standard Methods[2]
Ammonia Nitrogen, Total (as N)[3]	mg/L	Grab	Monthly	Standard Methods
Nitrate Nitrogen, Total (as N)[3]	mg/L	Grab	Monthly	Standard Methods
Nitrite Nitrogen, Total (as N)[3]	mg/L	Grab	Monthly	Standard Methods
Organic Nitrogen[3]	mg/L	Grab	Monthly	Standard Methods
Nitrogen, Total (as N)	mg/L	Calculate	Monthly	Standard Methods
Total Dissolved Solids (TDS)	mg/L	Grab	Monthly[4]	Standard Methods
Chloride	mg/L	Grab	Monthly[4]	Standard Methods
Boron	mg/L	Grab	Monthly[4]	Standard Methods
Sodium	mg/L	Grab	Monthly[4]	Standard Methods
Visual Observations[5]	--	--	--	Visual

Table Notes:

1. Each month, the Permittee shall report the daily average and monthly average flows.
2. In accordance with the current edition of *Standard Methods for Examination of Water and Wastewater* (American Public Health Administration) or current test procedures specified in 40 C.F.R. part 136.
3. Monitoring for nitrate, nitrite, ammonia, and organic nitrogen is for the purpose of determining total nitrogen concentration for agronomic rate calculations.
4. The monitoring frequency for total dissolved solids, chloride, boron, and sodium may be reduced to annually if the first 12 months of monitoring data collected after the effective date of this Order demonstrate that concentrations of these constituents are consistently lower than water quality objectives for protection of groundwater.
5. During periods of discharge to the irrigation system, visual observations shall be conducted at least monthly for agronomic applications to verify compliance with recycled water requirements in Order section IV.C, Recycling Specifications and Requirements. The inspection frequency shall be increased for uses sites with a history of non-compliance with water recycling requirements established in this Order. Visual monitoring shall confirm proper operations of the recycled water system and associated BMPs. The Permittee shall include a record of any malfunctions or findings of improper operations, including, but not limited to odors, evidence of surface run-off, or ponding that exceeds 24 hours. Visual observations may be performed by the irrigation users in accordance with the Permittee's user agreements. The quarterly recycled water report shall include the daily volume of treated wastewater discharged to the irrigation system and any observations indicating non-compliance with the provisions of the waste discharge requirements.

2. The Permittee shall comply with Water Recycling Specifications and Requirements contained in section IV.C of this Order.

DRAFT

B. Recycled Water Production and Use

1. Recycled water quality characteristics and precipitation data shall be used to ascertain nitrogen loading rates at each recycled water use site. The following information shall be reported for each use site type.

2. Reporting of the required monitoring shall be provided annually in the Annual Recycled Water Report to the Regional Water Board, and annually to the recycled water users.

Table E-9. Recycled Water Production and Use

Parameter	Units	Sample Type	Frequency	
			Sampling	Reporting
Volume of Recycled Water[1,2]	acre-feet	Meter	Monthly[3]	Annually
Total Area of Application	acres	Observation	Monthly	Annually
Total Nitrogen Application Rate[4,5]	lbs/acre-month	Calculation	Monthly	Annually
Rainfall	inches	Gage	Daily	Annually

Table Notes:
1. Estimation of the volume of the recycled water shall not include other potable or non-potable "make-up" water used in conjunction with recycled water.
2. May be estimated based on daily percentage of recycled water supplied via a non-potable water supply system.
3. May be based on available data (e.g., meters read every other month or quarterly).
4. Nitrogen application rate shall consider nutrients contained in the recycled water, based on analytical data obtained by the Permittee.
5. Nitrogen concentrations shall be calculated and reported "as N". For example, nitrate-nitrogen = 27 mg/L as NO_3 shall be converted and reported as nitrate-nitrogen = 6 mg/L as N.

VIII. RECEIVING WATER MONITORING REQUIREMENTS – SURFACE WATER AND GROUNDWATER

A. Monitoring Location RSW-001

1. The Permittee shall monitor Outlet Creek at Monitoring Location RSW-001 when discharging to surface water as follows:

Table E-10. Receiving Water Monitoring – Monitoring Location RSW-001

Parameter	Units	Sample Type	Minimum Sampling Frequency	Required Analytical Test Method
Flow	mgd	Gauge or Meter[1]	Daily	--
Visual Observations	--	Visual[2]	Weekly	--
pH	s.u.	Grab	Weekly[3]	Standard Methods[4]
Dissolved Oxygen	mg/L	Grab	Monthly	Standard Methods
Electrical Conductivity @ 25°C	µmhos/cm	Grab	Monthly	Standard Methods
Hardness, Total (as $CaCO_3$)	mg/L	Grab	Monthly	Standard Methods
Temperature	°C	Grab	Weekly[3]	Standard Methods
Turbidity	NTU	Grab	Monthly	Standard Methods
Ammonia Nitrogen, Total (as N)	mg/L	Grab	Monthly	Standard Methods
Nitrate Nitrogen, Total (as N)	mg/L	Grab	Monthly	Standard Methods
Nitrite Nitrogen, Total (as N)	mg/L	Grab	Monthly	Standard Methods

DRAFT

Parameter	Units	Sample Type	Minimum Sampling Frequency	Required Analytical Test Method
Organic Nitrogen	mg/L	Grab	Monthly	Standard Methods
Nitrogen, Total (as N)	mg/L	Calculate	Monthly	Standard Methods
Phosphorus, Total (as P)	mg/L	Grab	Monthly	Standard Methods
CTR Priority Pollutants[5]	µg/L	Grab	Annually	Standard Methods[6]

Table Notes:

1. By the effective date of this Order (**December 1, 2015), t**he Permittee shall propose a method of measurement for the receiving water flow for approval by the Executive Officer.
2. Visual observations shall be made for evidence of floatables (i.e., solids, liquids, foam, and scum), visible films (i.e., oils, greases, and waxes), aquatic growths, and discoloration. Observations shall be recorded and included in the monthly self-monitoring reports.
3. pH and temperature monitoring must coincide with monthly monitoring for ammonia.
4. In accordance with the current edition of *Standard Methods for Examination of Water and Wastewater* (American Public Health Administration) or current test procedures specified in 40 C.F.R. part 136.
5. Those pollutants identified by the California Toxics Rule at 40 C.F.R. section 131.38. The Permittee is not required to sample and analyze for asbestos. Hardness shall be monitored concurrently with the annual priority pollutant sample. Monitoring shall occur simultaneously with effluent monitoring for CTR priority pollutants required by section IV.B of this MRP.
6. Analytical methods must achieve the lowest minimum level (ML) specified in Appendix 4 of the SIP and, in accordance with section 2.4 of the SIP, the Permittee shall report the ML and MDL for each sample result.

B. Monitoring Locations RSW-003 and RSW-004

1. The Permittee shall monitor Outlet Creek at Monitoring Locations RSW-003 and RSW-004 when discharging to surface water as follows:

Table E-11. Receiving Water Monitoring – Monitoring Locations RSW-003 and RSW-004

Parameter	Units	Sample Type	Minimum Sampling Frequency	Required Analytical Test Method
Visual Observations	--	Visual[1]	Weekly	--
pH	s.u.	Grab	Weekly[2]	Standard Methods[3]
Dissolved Oxygen	mg/L	Grab	Monthly	Standard Methods
Electrical Conductivity @ 25°C	µmhos/cm	Grab	Monthly	Standard Methods
Temperature	°C	Grab	Weekly[2]	Standard Methods
Turbidity	NTU	Grab	Monthly	Standard Methods

Table Notes:

1. Visual observations shall be made for evidence of floatables (i.e., solids, liquids, foam, and scum), visible films (i.e., oils, greases, and waxes), aquatic growths, and discoloration. Observations shall be recorded and included in the monthly self-monitoring reports.
2. pH and temperature monitoring must coincide with monthly monitoring for ammonia.
3. In accordance with the current edition of *Standard Methods for Examination of Water and Wastewater* (American Public Health Administration) or current test procedures specified in 40 C.F.R. part 136.

C. Groundwater Monitoring – Not Required

This Order does not require groundwater monitoring at this time.

DRAFT

IX. OTHER MONITORING REQUIREMENTS

A. Disinfection Process Monitoring for UV Disinfection System

1. Monitoring Location INT-001

a. Monitoring. The UV transmittance of the effluent from the UV disinfection system shall be monitored continuously and recorded at Monitoring Location INT-001. The operational UV dose shall be calculated from UV transmittance and flow.

b. Compliance. The UV transmittance shall not fall below 65 percent of maximum at any time, unless otherwise approved by DDW. The operational UV dose shall not fall below 50 millijoules per square centimeter (mJ/cm^2) at any time, unless otherwise approved by DDW. Flow through the UV disinfection system shall not exceed 7.0 mgd, unless otherwise approved by DDW.

c. Reporting. The Permittee shall report daily average and lowest daily transmittance and operational UV dose on its monthly monitoring reports. The Permittee shall report daily average and minimum flow through the UV disinfection system. If the UV transmittance falls below 65 percent or UV dose falls below 50 mJ/cm^2, the event shall be reported to the Regional Water Board and DDW by telephone within 24 hours. Any inadequately treated and disinfected wastewater shall be diverted to a storage basin or an upstream process for adequate treatment.

B. Septage Station Monitoring

1. Monitoring Location SEP-001

a. For each septage load delivered to the Facility, the Permittee shall require the hauler to collect and report a pH value representative of the load.

b. The Permittee shall estimate, prior to the beginning of a quarterly and semiannual monitoring period, the number of anticipated septage deliveries for the given monitoring frequency, and generate a random load number from this total. When the delivery corresponding to the pre-chosen random number is received, the Permittee will collect a representative septage sample and have the samples analyzed in accordance with Table E-12 and with standard sample collection and handling procedures. Each sample shall be analyzed in accordance with the following table.

Table E-12. Septage Monitoring – Monitoring Location SEP-001

Parameter	Units	Sample Type	Minimum Sampling Frequency	Required Analytical Test Method
pH	s.u.	Grab	Weekly	Standard Methods[1]
Chemical Oxygen Demand	mg/L	Grab	Quarterly	Standard Methods
Oil and Grease	mg/L	Grab	Quarterly	Standard Methods
Metals and Trace Elements	µg/L	Grab	Quarterly	Standard Methods
Purgeable Organic Compounds[2]	µg/L	Grab	Semiannually	Standard Methods
Semivolatile Organic Compounds	µg/L	Grab	Semiannually	Standard Methods

Table Notes:
1. In accordance with the current edition of *Standard Methods for Examination of Water and Wastewater* (American Public Health Administration) or current test procedures specified in 40 C.F.R. part 136.
2. Purgeable organic compounds shall include the parameters listed in U.S. EPA Method 624.
3. Semivolatile organic compounds shall include the parameters listed in U.S. EPA Method 625.

DRAFT

2. **Septage Hauler Tracking**

For any month when septage waste is received by the Facility, the source(s) of the waste shall be documented. A summary table of all septage discharged to the Facility shall be submitted quarterly and shall include:

a. Date and time of discharge;

b. Name, County identification number, and District identification number of the hauler;

c. Volume discharged;

d. Source(s) of the waste; and

e. pH of the septage load.

X. REPORTING REQUIREMENTS

A. General Monitoring and Reporting Requirements

1. The Permittee shall comply with all Standard Provisions (Attachment D) related to monitoring, reporting, and recordkeeping.

B. Self-Monitoring Reports (SMRs)

1. The Permittee shall submit electronic Self-Monitoring Reports (eSMRs) using the State Water Board's California Integrated Water Quality System (CIWQS) Program Web site (http://www.waterboards.ca.gov/ciwqs/index.html). The CIWQS Web site will provide additional directions for SMR submittal in the event there will be service interruption for electronic submittal. The Permittee shall maintain sufficient staffing and resources to ensure it submits eSMRs that are complete and timely. This includes provision of training and supervision of individuals (e.g., Permittee personnel or consultant) on how to prepare and submit eSMRs.

2. The Permittee shall report in the SMR the results for all monitoring specified in this MRP under sections III through IX. The Permittee shall submit monthly SMRs including the results of all required monitoring using U.S. EPA -approved test methods or other test methods specified in this Order. SMRs are to include all new monitoring results obtained since the last SMR was submitted. If the Permittee monitors any pollutant more frequently than required by this Order, the results of this monitoring shall be included in the calculations and reporting of the data submitted in the SMR.

3. All monitoring results reported shall be supported by the inclusion of the complete analytical report from the laboratory that conducted the analyses.

4. Monitoring periods and reporting for all required monitoring shall be completed according to the following schedule:

Table E-13. Monitoring Periods and Reporting Schedule

Sampling Frequency	Monitoring Period Begins On…	Monitoring Period	SMR Due Date
Continuous	Permit effective date	All	First day of second calendar month following end of quarter (February 1, May 1, August 1, November 1)

DRAFT

Sampling Frequency	Monitoring Period Begins On…	Monitoring Period	SMR Due Date
Daily	Permit effective date	(Midnight through 11:59 PM) or any 24-hour period that reasonably represents a calendar day for purposes of sampling.	First day of second calendar month following end of quarter(February 1, May 1, August 1, November 1)
Weekly	Sunday following permit effective date or on permit effective date if on a Sunday	Sunday through Saturday	First day of second calendar month following end of quarter(February 1, May 1, August 1, November 1)
Monthly	First day of calendar month following permit effective date or on permit effective date if that date is first day of the month	First day of calendar month through last day of calendar month	First day of second calendar month following end of quarter(February 1, May 1, August 1, November 1)
Quarterly	Closest of January 1, April 1, July 1, or October 1 following (or on) permit effective date	January through March April through June July through September October through December	First day of second calendar month following end of quarter(February 1, May 1, August 1, November 1)
Semiannually	Closest of January 1 or July 1 following (or on) permit effective date	January through June July through December	September 1, each year March 1, each year
2X/Year	October 1 following (or on) permit effective date	October through May 14	August 1, each year
Annually	January 1 following (or on) permit effective date	January 1 through December 31	March 1, each year

5. **Reporting Protocols.** The Permittee shall report with each sample result the applicable ML, the RL, and the current Method Detection Limit (MDL), as determined by the procedure in 40 C.F.R. part 136.

   The Permittee shall report the results of analytical determinations for the presence of chemical constituents in a sample using the following reporting protocols:

   a. Sample results greater than or equal to the reported ML shall be reported as measured by the laboratory (i.e., the measured chemical concentration in the sample).

   b. Sample results less than the reported ML, but greater than or equal to the laboratory's MDL, shall be reported as "Detected, but Not Quantified," or DNQ. The estimated chemical concentration of the sample shall also be reported.

   For the purposes of data collection, the laboratory shall write the estimated chemical concentration next to DNQ as well as the words "Estimated Concentration" (may be shortened to "Est. Conc."). The laboratory may, if such information is available, include numerical estimates of the data quality for the reported result. Numerical estimates of data quality may be percent accuracy (± a percentage of the reported value), numerical ranges (low to high), or any other means considered appropriate by the laboratory.

   c. Sample results less than the laboratory's MDL shall be reported as "Not Detected," or ND.

   d. The Permittee is to instruct laboratories to establish calibration standards so that the ML value (or its equivalent if there is differential treatment of samples relative to calibration standards) is the lowest calibration standard. At no time is the Permittee to

DRAFT

use analytical data derived from extrapolation beyond the lowest point of the calibration curve.

6. The Permittee shall submit SMRs in accordance with the following requirements:

   a. The Permittee shall arrange all reported data in a tabular format. The data shall be summarized to clearly illustrate whether the facility is operating in compliance with interim and/or final effluent limitations. The reported data shall include calculation of all effluent limitations that require averaging, taking of a median, or other computation. The Permittee is not required to duplicate the submittal of data that is entered in a tabular format within CIWQS. When electronic submittal of data is required and CIWQS does not provide for entry into a tabular format within the system, the Permittee shall electronically submit the data in a tabular format as an attachment.

   b. The Permittee shall attach a cover letter to the SMR. The information contained in the cover letter shall clearly identify:

      i. Facility name and address;

      ii. WDID number;

      iii. Applicable period of monitoring and reporting;

      iv. Violations of the WDRs (identified violations must include a description of the requirement that was violated and a description of the violation);

      v. Corrective actions taken or planned; and

      vi. The proposed time schedule for corrective actions.

   c. SMRs must be submitted to the Regional Water Board, signed and certified as required by the Standard Provisions (Attachment D), to the CIWQS Program Web site (http://www.waterboards.ca.gov/ciwqs/index.html). In the event that an alternate method for submittal of SMRs is required, the Permittee shall submit the SMR electronically via e-mail to NorthCoast@waterboards.ca.gov or on disk (CD or DVD) in Portable Document Format (PDF) file in lieu of paper-sourced documents. The guidelines for electronic submittal of documents can be found on the Regional Water Board website at http://www.waterboards.ca.gov/northcoast.

C. Discharge Monitoring Reports (DMRs)

1. The Permittee shall electronically certify and submit Discharge Monitoring Reports (DMRs) together with SMRs using Electronic Self-Monitoring Reports module eSMR 2.5 or any upgraded version. Electronic submittal of DMRs will be in addition to electronic submittal of SMRs. Information about electronic submittal of DMRs is provided by the Discharge Monitoring Report web site as follows: (http://www.waterboards.ca.gov/water_issues/programs/discharge_monitoring/).

D. Other Reports

1. **Special Study Reports and Progress Reports.** As specified in the Special Provisions contained in section VI of the Order, special study and progress reports shall be submitted in accordance with the following reporting requirements.

DRAFT

Table E-14. Reporting Requirements for Special Provisions Reports

Order Section	Special Provision Requirement	Due Date
Recycling Specifications and Requirements IV.C.2.b.	Recycled Water Engineering Report	**November 1, 2016**
Special Provision VI.C.2.a.ii	TRE Work Plan Revisions	**March 1, 2016**
Special Provision VI.C.2.b.i	Source Control and Pretreatment Studies, Local Limits Study	**March 1, 2018**
Special Provision VI.C.2.b.ii	Source Control and Pretreatment Studies, Updated Sewer Use Ordinance Report	**March 1, 2017**
Special Provision VI.C.2.b.ii	Source Control and Pretreatment Studies, Updated Sewer Use Ordinance	**March 1, 2018** (if necessary)
Special Provision VI.C.3.a.i	Pollutant Minimization Program	As required by the Executive Officer
Special Provision VI.C.3.a.ii(e)	Pollutant Minimization Program, Annual Facility Report	**March 1**, annually, following development of Pollutant Minimization Program
Special Provision VI.C.4.b	Updated Operation and Maintenance (O&M) Manual	**October 1, 2015**
Special Provision VI.C.5.b.i	Source Control and Pretreatment Provisions, Annual Report	**March 1,** annually
Special Provision VI.C.5.b.i.(c)(2)	Source Control and Pretreatment Provisions, Industrial Waste Survey and Priority Pollutant Monitoring Results	**March 1, 2017**
Special Provision VI.C.5.b.ii(a)	Source Control and Pretreatment Provisions, Notification of Discharges that Trigger Pretreatment Requirements	**Within 30 days** of discharges that trigger pretreatment requirements
Special Provision VI.C.5.b.ii(b)	Source Control and Pretreatment Provisions, Revised Report of Waste Discharge and Pretreatment Program	**Within 1 year** of discharges that trigger pretreatment requirements
Special Provision VI.C.5.f	Adequate Capacity, Technical Report	**Within 120 days** of notification that the Facility will reach capacity within 4 years
Special Provision VI.C.5.d.i.	Coverage under the State Water Board Water Quality Order No. 2004-0012-DWQ General Waste Discharge Requirements for the Discharge of Biosolids to Land or Use as a Soil Amendment in Agricultural, Silvicultural, Horticultural, and Land Reclamation Activities or alternative	**June 15, 2016**

DRAFT

2. The Permittee shall report the results of any special studies, acute and chronic toxicity testing, TRE/TIE, PMP, and Pollution Prevention Plan required by Special Provisions – VI.C.2 and VI.C.3 of this Order.

3. **Annual Report.** The Permittee shall submit an annual report to the Regional Water Board for each calendar year through the CIWQS Program Web site. In the event that an alternate method of submitting the annual report is required, the Permittee shall submit the report to the e-mail address in section X.B.6.c., above. The report shall be submitted by March 1st of the following year. The report shall, at a minimum, include the following:

   a. Both tabular and, where appropriate, graphical summaries of the monitoring data and disposal records from the previous year. If the Permittee monitors any pollutant more frequently than required by this Order, using test procedures approved under 40 C.F.R. part 136 or as specified in this Order, the results of this monitoring shall be included in the calculation and report of the data submitted SMR.

   b. A comprehensive discussion of the Facility's compliance (or lack thereof) with all effluent limitations and other WDRs, and the corrective actions taken or planned, which may be needed to bring the discharge into full compliance with the Order.

   c. The names and general responsibilities of all persons employed at the Facility;

   d. The names and telephone numbers of persons to contact regarding the Facility for emergency and routine situations; and

   e. A statement certifying when the flow meter(s) and other monitoring instruments and devices were last calibrated, including identification of who performed the calibration.

   f. **Sanitary Sewer System Reporting.** The Permittee shall submit, as part of its annual report to the Regional Water Board, a description of the Permittee's activities within the sanitary sewer system over the previous 12 months. The report shall contain:

      i. A description of any change in the local legal authorities enacted to implement the Sewer System Management Plan (SSMP);

      ii. A summary of the sanitary sewer overflows (SSOs) that occurred in the past year. The summary shall include the date, location of overflow point, affected receiving water (if any), estimated volume, and cause of the SSO, and the names and addresses of the responsible parties as well as the names and addresses of the property owner(s) affected by the sanitary sewer overflow;

      iii. A summary of compliance and enforcement activities during the past year. The summary shall include fines, other penalties, or corrective actions taken as a result of the SSO. The summary shall also include a description of public participation activities to involve and inform the public;

      iv. Documentation that all feasible steps to stop and mitigate impacts of sanitary sewer overflows have been taken; and

      v. Documentation that the annual report has been made available to the public.

   g. **Source Control Activity Reporting.** The Permittee shall submit, as part of its Annual Report to the Regional Water Board, a description of the Permittee's source control activities, as required by Special Provision VI.C.5.b, during the past year. This annual report is due on March 1st of each year and shall contain:

      i. A copy of the source control standards, including a table presenting local limits.

      ii. A description of the waste hauler permit system; if applicable.

DRAFT

iii. A summary of the compliance and enforcement activities taken by the Permittee during the past year, which ensures industrial user compliance. The summary shall include the names and addresses of any industrial or commercial users under surveillance by the Permittee, an explanation of whether they were inspected, sampled, or both, the frequency of these activities at each user, and the conclusions or results from the inspection or sampling of each user.

iv. An updated list of industrial users (by North American Industrial Classification/Standard Industrial Classification categories) which were issued permits and/or enforcement orders, and a status of compliance for each user.

v. The name and address of each user that received a discharge limit.

vi. A summary of any industrial waste survey results.

vii. A summary of public outreach activities to educate industrial, commercial, and residential users about the importance of preventing discharges of industrial and toxic wastes to the Facility.

h. Sludge Handling and Disposal Activity Reporting. The Permittee shall submit, as part of its annual report to the Regional Water Board, a description of the Permittee's solids handling, disposal and reuse activities over the previous 12 months. At a minimum, the report shall contain:

i. Annual sludge production, in dry tons and percent solids;

ii. Sludge monitoring results;

iii. A schematic diagram showing sludge handling facilities (e.g., digesters, thickeners, drying beds, etc.), if any and a solids flow diagram;

iv. Methods of final disposal of sludge:

(a) For any portion of sludge discharged to a sanitary landfill, the Permittee shall provide the volume of sludge transported to the land fill, the names and locations of the facilities receiving sludge, the Regional Water Board's WDRs order number for the regulated landfill, and the landfill classification.

(b) For any portion of sludge discharged through land application, the Permittee shall provide the volume of biosolids applied, the date and locations where biosolids were applied, the Regional Water Board's WDRs order number for the regulated discharge, a demonstration that the discharge was conducted in compliance with applicable permits and regulations, and, if applicable, corrective actions taken or planned to bring the discharge into compliance with WDRs.

(c) For any portion of sludge further treated through composting, the Permittee shall provide a summary of the composting process, the volume of sludge composted, and a demonstration and signed certification statement that the composting process and final product met all requirements for Class A biosolids.

v. Results of internal or external third-party audits of the Biosolids Management System, including reported program deficiencies and recommendations, required corrective actions, and a schedule to complete corrective actions.

i. Storm Water Reporting. The Permittee shall submit, as part of its annual report to the Regional Water Board, an evaluation of the effectiveness of the Permittee's BMPs to

DRAFT

control the run-on of storm water to the treatment facility site, as well as activities to maintain and upgrade these BMPs.

j. Septage Monitoring and Reporting. The results of septage monitoring shall be provided as follows:

i. A narrative description of all preparatory, monitoring, sampling, and analytical testing activities for the septage monitoring program. The narrative shall be sufficiently detailed to verify compliance with waste discharge requirements and this MRP.

ii. A summary table of all discharges of septage to the Facility. At a minimum, the table shall include: the name, County identification number, and District identification number of each hauler discharging to the Facility over the past calendar year.

iii. A summary table of analytical results for all samples of septage collected in compliance with waste discharge requirements and this MRP. When directed by the Regional Water Board, the Permittee shall also append analytical reports, chains of custody, and other documentation necessary to confirm the validity of the monitoring samples.

4. Water Recycling System

a. Water Recycling Operations Reporting. The Permittee shall submit reports pertaining to the operation, performance, monitoring, and other activities related to water recycling as follows:

i. Quarterly Recycled Water Report. The Permittee shall submit a quarterly recycled water report, as required by section 13523.1(b)(4) of the Water Code and other requirements of this Order, containing the following information:

(a) Name, location, and acreage of each recycled water use site;

(b) Total volume of recycled water supplied to each recycled water user for each month of the reporting period;

(c) A summary of recycled water use site inspections conducted by the Permittee or recycled water users. The Permittee shall report:

(1) Inspection dates;

(2) All observations of recycled water over-application, such as ponding and irrigation runoff, including the length of time that such conditions existed, and measures taken to correct the cause of over-application;

(3) A summary of operational problems, irrigation equipment malfunctions, and any diversion of recycled water which does not meet the requirements specified in this Order.

(4) All equipment or process failures initiating an alarm, as well as any corrective and preventative actions taken; and

(5) Documentation of notifications to users if any recycled water was delivered that did not meet the requirements specified in this Order.

ii. Annual Recycled Water Report. The annual report shall include but not be limited to the following:

DRAFT

(a) A compliance summary and discussion of the compliance record for the prior calendar year, including:

(1) In the event of noncompliance, the report shall also discuss the corrective actions taken and planned to bring the recycled water program into full compliance with this Order;

(2) Certification that all reasonable BMPs and management practices were implemented to ensure efficient and compliant operation of the recycled water system; and

(3) Identification of any other problems that occurred in the recycled water system during the prior year, including repeated occurrences of incidental runoff of which the Permittee is aware, and plans to rectify those problems in the coming year.

(b) A summary of major repairs scheduled or completed that affected the recycled water system appurtenances and irrigation areas;

(c) Enforcement and monitoring activities that occurred during the previous year, and identification of any problems and how the problems were addressed;

(d) If applicable, a summary of all cross-connection testing and back-flow prevention activities (inspections, maintenance) and a summary of any problems identified, or certification that no problems occurred; and

(e) A description of agronomic rate compliance, pursuant to section VII.B of the MRP.

E. Spill Notification

1. Spills and Unauthorized Discharges. Information regarding all spills and unauthorized discharges (except SSOs) that may endanger health or the environment shall be provided orally to the Regional Water Board[1] within 24 hours from the time the Permittee becomes aware of the circumstances and a written report shall also be provided within five (5) days of the time the Permittee becomes aware of the circumstances, in accordance with Section V.E of Attachment D.

Information to be provided verbally to the Regional Water Board includes:

a. Name and contact information of caller;

b. Date, time, and location of spill occurrence;

c. Estimates of spill volume, rate of flow, and spill duration, if available and reasonably accurate;

d. Surface water bodies impacted, if any;

e. Cause of spill, if known at the time of the notification;

f. Cleanup actions taken or repairs made at the time of the notification; and

g. Responding agencies.

[1] The contact number of the Regional Water Board during normal business hours is (707) 576-2220. After normal business hours, spill reporting to CalEMA will satisfy the 24 hour spill reporting requirement for the Regional Water Board. The contact number for spill reporting for the CalEMA is (800) 852-7550.

DRAFT

2. **Sanitary Sewer Overflows.** Notification and reporting of sanitary sewer overflows is conducted in accordance with the requirements of Order No. 2006-0003-DWQ (Statewide General WDRs for Sanitary Sewer Systems), which is not incorporated herein by reference, and any revisions thereto.

3. **Recycled Water Spills.** Notification and reporting of spills and unauthorized discharges of recycled water discharged in or on any waters of the state, as defined in Water Code section 13050, shall be conducted in accordance with the following:

   a. **Secondary Recycled Water**[2]

      i. For unauthorized discharges of 50,000 gallons or more of secondary recycled water, the Permittee shall immediately notify the Regional Water Board as soon as (a) the Permittee has knowledge of the discharge or probable discharge, (b) notification is possible, and (c) notification can be provided without substantially impeding cleanup or other emergency measures.

      ii. For unauthorized discharges of more than 1,000 gallons, but less than 50,000 gallons of secondary recycled water, the Permittee shall notify the Regional Water Board as soon as possible, but no longer than 3 days after becoming aware of the discharge.

DRAFT

[2] Secondary Recycled Water means "disinfected secondary 23 recycled water" as defined by DDW or wastewater receiving advanced treatment beyond disinfected secondary 23 recycled water.

ATTACHMENT F – FACT SHEET

Contents

I. Permit Information F-3
II. Facility Description F-4
  A. Description of Wastewater and Biosolids Treatment and Controls F-4
  B. Discharge Points and Receiving Waters F-6
  C. Summary of Existing Requirements and Self-Monitoring Report (SMR) Data F-7
  D. Compliance Summary F-8
  E. Planned Changes F-8
III. Applicable Plans, Policies, and Regulations F-9
  A. Legal Authorities F-9
  B. California Environmental Quality Act (CEQA) F-9
  C. State and Federal Laws, Regulations, Policies, and Plans F-9
  D. Impaired Water Bodies on CWA 303(d) List F-11
  E. Other Plans, Policies and Regulations F-12
IV. Rationale for Effluent Limitations and Discharge Specifications F-14
  A. Discharge Prohibitions F-14
  B. Technology-Based Effluent Limitations F-16
    1. Scope and Authority F-16
    2. Applicable Technology-Based Effluent Limitations F-17
  C. Water Quality-Based Effluent Limitations (WQBELs) F-19
    1. Scope and Authority F-19
    2. Applicable Beneficial Uses and Water Quality Criteria and Objectives F-21
    3. Determining the Need for WQBELs F-22
    4. WQBEL Calculations F-27
    5. Whole Effluent Toxicity (WET) F-30
  D. Final Effluent Limitation Considerations F-34
    1. Anti-Backsliding Requirements F-34
    2. Antidegradation Policies F-34
    3. Stringency of Requirements for Individual Pollutants F-34
  E. Interim Effluent Limitations – Not Applicable F-36
  F. Land Discharge Specifications – Not Applicable F-36
  G. Recycling Specifications and Requirements F-36
  H. Other Requirements F-39
V. Rationale for Receiving Water Limitations F-40
  A. Surface Water F-40
  B. Groundwater F-40
VI. Rationale for Provisions F-41
  A. Standard Provisions F-41
  B. Special Provisions F-41
    1. Reopener Provisions F-41
    2. Special Studies and Additional Monitoring Requirements F-42
    3. Best Management Practices and Pollution Prevention F-43
    4. Construction, Operation, and Maintenance Specifications F-43
    5. Special Provisions for Municipal Facilities (POTWs Only) F-43
    6. Other Special Provisions F-45
    7. Compliance Schedules – Not Applicable F-46
VII. Rationale for Monitoring and Reporting Requirements F-46
  A. Influent Monitoring F-46

DRAFT

B. Effluent Monitoring F-46
C. Whole Effluent Toxicity Testing Requirements F-47
D. Recycling Monitoring Requirements F-47
E. Receiving Water Monitoring F-48
F. Other Monitoring Requirements F-48
G. Reporting Requirements F-48
VIII. Public Participation F-48
A. Notification of Interested Parties F-49
B. Written Comments F-49
C. Public Hearing F-49
D. Waste Discharge Requirements Petitions F-49
E. Information and Copying F-49
F. Register of Interested Persons F-50
G. Additional Information F-50

Tables

Table F-1. Facility Information F-3
Table F-2. Historic Effluent Limitations and Monitoring Data – Discharge Point 002 ..... F-7
Table F-3. Historic Effluent Limitations and Monitoring Data – Discharge Point 003 ..... F-8
Table F-4. Basin Plan Beneficial Uses F-10
Table F-5. Summary of Technology-Based Effluent Limitations – Discharge Point 002 ..... F-18
Table F-6. Summary of Reasonable Potential Analysis Results F-27
Table F-7. Determination of Long Term Averages F-28
Table F-8. Determination of Final WQBELs Based on Aquatic Life Criteria F-29
Table F-9. Determination of Final WQBELs Based on Human Health Criteria F-29
Table F-10. Summary of Water Quality-Based Effluent Limitations – Discharge Point 002 ..... F-29
Table F-11. Summary of Water Quality-Based Effluent Limitations – Discharge Point 003 ..... F-29
Table F-12. Summary of Chronic Toxicity Results F-31
Table F-13. Summary of Final Effluent Limitations – Discharge Point 002 ..... F-35
Table F-14. Summary of Final Effluent Limitations – Discharge Point 003 ..... F-36
Table F-15. Summary of Recycling Discharge Specifications – Discharge Point 002 ..... F-39
Attachment F-1 – City of Willits Wastewater Treatment Facility RPA Summary F-1

DRAFT

ATTACHMENT F – FACT SHEET

As described in section I, the Regional Water Board incorporates this Fact Sheet as findings of the Regional Water Board supporting the issuance of this Order. This Fact Sheet includes the legal requirements and technical rationale that serve as the basis for the requirements of this Order.

This Order has been prepared under a standardized format to accommodate a broad range of discharge requirements for dischargers in California. Only those sections or subsections of this Order that are specifically identified as "not applicable" have been determined not to apply to this Permittee. Sections or subsections of this Order not specifically identified as "not applicable" are fully applicable to this Permittee.

I. PERMIT INFORMATION

The following table summarizes administrative information related to the facility.

Table F-1. Facility Information

WDID	1B80078OMEN
Permittee	City of Willits
Name of Facility	Wastewater Treatment Facility
Facility Address	300 N. Lenore Street
	Willits, CA 95490
	Mendocino County
Facility Contact, Title and Phone	J.C. England, Sewer Plant Supervisor, (707) 459-5028
Authorized Person to Sign and Submit Reports	Rod Wilburn, Public Works Director, (707) 459-7143
Mailing Address	111 E. Commercial Street, Willits, CA 95490
Billing Address	Same as Mailing Address
Type of Facility	Publicly Owned Treatment Works (POTW)
Major or Minor Facility	Major
Threat to Water Quality	1
Complexity	A
Pretreatment Program	NA
Recycling Requirements	Producer
Facility Permitted Flow	4.0 million gallons per day (mgd) (monthly average flow)
Facility Design Flow	7.0 mgd (monthly average flow)
Watershed	Upper Eel River
Receiving Water	Outlet Creek
Receiving Water Type	Inland surface water

A. The City of Willits (hereinafter Permittee) is the owner and operator of the City of Willits Wastewater Treatment Facility (hereinafter Facility), a POTW.

For the purposes of this Order, references to the "discharger" or "permittee" in applicable federal and state laws, regulations, plans, or policy are held to be equivalent to references to the Permittee herein.

B. The Facility discharges enhanced secondary treated wastewater to Outlet Creek, a water of the United States. The Permittee was previously regulated by Order No. R1-2010-0017 and National Pollutant Discharge Elimination System (NPDES) Permit No. CA0023060 adopted on July 15, 2010 and expired on August 30, 2015. The terms and conditions of the current Order and

DRAFT

MRP have been automatically continued and remain in effect until new Waste Discharge Requirements (WDRs) and NPDES permit are adopted pursuant to this Order. Attachment B provides a map of the area around the Facility. Attachment C provides a flow schematic of the Facility.

C. The Permittee filed a report of waste discharge (ROWD) and submitted an application for reissuance of its WDRs and NPDES permit on March 2, 2015.

II. FACILITY DESCRIPTION

The Permittee owns and operates a municipal wastewater treatment facility (WWTF or Facility) and associated wastewater collection, reclamation, and disposal facilities that serve a population of 9,000 residential and commercial users. The Facility receives septage from local area haulers. Septage is handled directly through the solids handling portion of the WWTF, with separated liquids then diverted to the headworks.

A. Description of Wastewater and Biosolids Treatment and Controls

The Facility is located northeast of Willits, California adjacent to Broaddus Creek and Baechtel Creek and serves the City of Willits, the Brooktrails Community Services District and the Meadowbrook Manor Sanitation District. From October 1 through May 14, treated wastewater is discharged from Discharge Point 003 to Outlet Creek, downstream of the confluence of Broaddus Creek and Baechtel Creek. From May 15 through September 30 and all other times seasonally appropriate, treated wastewater is recycled via irrigation on adjacent pasture lands. Outlet Creek is tributary to the Eel River within the Outlet Creek Hydrologic Subarea of the Upper Main Eel River Hydrologic Area.

Order No. R1-2010-0017 included effluent limitations and monitoring requirements for discharges from the former WWTF at Discharge Point 001 (Monitoring Location EFF-001) and the upgraded WWTF at Discharge Points 002, 003, and 004 (Monitoring Locations EFF-002, EFF-003, and EFF-004, respectively). The Permittee completed upgrades to the Facility and began discharging from the new WWTF in February 2013. As part of that upgrade, Discharge Point 001 was eliminated. Therefore, the effluent limitations for Discharge Point 001 and associated monitoring requirements at Monitoring Location EFF-001 have not been retained in this Order.

The Facility includes primary treatment at the headworks building, an enhanced extended aeration activated sludge mechanical secondary treatment process with nutrient removal, ultraviolet light (UV) disinfection, followed by enhanced effluent treatment and storage within the enhancement wetlands. The Facility is sized and constructed to provide the current required treatment capacity and accommodate anticipated growth through 2025. Although treatment components of the Facility have been designed to accommodate higher flows, the Permittee has only requested a permitted discharge of an average monthly flow up to 4.0 mgd.

Primary treatment is provided in a two-story headworks building and influent pump station. Influent to the Facility is directed to the influent pump station wet well chamber below the first level of the headworks building. Influent from the wet well chamber is measured by magnetic meters at INF-001. The wet well chamber has four pumps and removes floatables with a pre-rotation process. The two larger pumps (38.9 horsepower (HP) each) can pump up to 2,430 gallons per minute (gpm). The two smaller pumps (25.4 HP each) can pump up to 1,215 gpm. Wastewater in the wet well is pumped through two screw conveyed inclined screens to the second-story. Solids removed by the inclined screens are conveyed by chutes and bagged for disposal by Solids Waste Services. Wastewater from the inclined screens is directed to a grit removal and classification chamber. The grit classifier is supplied by two alternating 15 HP pumps rated at 300 gpm. Solids from the grit removal process are collected in a bin on the first level. The headworks treatment processes are sized to handle a future peak influent flow capacity of 10 mgd.

DRAFT

Primary treated wastewater exceeding the secondary treatment capacity is diverted by a secondary influent splitter box to the first of five storm equalization ponds located on the south end of the Facility property. Flow entering the equalization basins is measured at INF-002. The equalization ponds have a combined total capacity of approximately 16 million gallons. Pond No. 1 is lined with concrete, while the remaining ponds are lined with impermeable clay liners.

During periods of wet weather, influent flows that exceed the capacity of the Facility are directed into Pond No. 1. When Pond No. 1 has reached capacity, excess wastewater flows over a weir into Pond No. 2, leaving behind any settleable solids as it skims the wastewater off the top. When Pond No. 2 reaches capacity, wastewater flows into Pond No. 3 via a pipe set at the bottom of the pond, which removes floatables as they remain at the top. Wastewater is piped from Pond No. 3 to Pond Nos. 4 and 5 as required by wet weather flows. Flow between each of the ponds is controlled by gravity. When influent flows to the Facility drop below the treatment capacity, wastewater from Pond No. 1 can be directed back to the headworks through a pipe in the northeast corner of the pond. Flows re-entering the headworks are measured at INF-003. A one-way flow restrictor between Pond Nos. 1 and 2 opens as the flow reverses and allows water from the ponds to be redirected from the ponds to the headworks.

Septage is received at the Facility from septage haulers who discharge into a solids separator and diverted directly into the solids handing portion of the WWTF. Liquids separated from the processing of solids are held in the aerobic digester then return for treatment to the headworks.

The extended aeration system provides efficient biochemical oxygen demand (BOD) and nutrient removal. A long solids retention time in the extended aeration system provides process stability and, due to the large quantity of biological solids present, wide swings in organic and hydraulic loads can be handled without adjustments to the process or equipment. The extended aeration system produces well digested and stabilized biomass. The extended aeration system is designed for a peak hydraulic capacity of 7.0 mgd.

Each of the two aeration basins contains eight diffuser chains. The air to each diffuser chain is individually controlled by a motorized valve which operates on a timed cycle during denitrification mode. When diffuser chains are turned off, anoxic zones are created to promote denitrification. Of the eight diffuser chains in each basin, six operate as part of the timed cycle with three chains on and three off.

The two basins are 134 feet wide at grade and 150 feet in length, measured at the top of the berm, providing a combined volume of 2.437 million gallons. The basins are lined with a polypropylene reinforced geomembrane with a minimum thickness of 60 millimeters (mm).

The two circular clarifiers are 70 feet diameter by 14 feet deep tanks constructed of concrete. The combined capacity of the two clarifiers is 7.0 mgd. At a peak flow of 7.0 mgd, the overflow rate of the clarifiers is 1,099 gpd/SF. The three screw centrifugal return activated sludge (RAS) pumps have a capacity of 1,250 gpm each, with a maximum return rate of 3.6 mgd. Two pumps are operated at all times while one is reserved for backup. The RAS pumps are located adjacent to the clarifiers. A 4" pump conveys waste activated sludge (WAS) to the aerobic digester.

The UV disinfection system is designed to achieve a median total coliform organism concentration of less than 23 most probable number per 100 milliliters (MPN/100 mL) and a daily maximum concentration of 230 MPN/100 mL. The delivered dose is a function of the clarity of the water or the UV transmissivity (UVT). The design of the system conservatively assumes transmissivity of 55 percent. The UV disinfection system is sized to handle capacities as low as 0.35 mgd and as great as 7.0 mgd.

Following disinfection, effluent is discharged into an enhancement wetland for further treatment. The enhancement wetland is located on a 40-acre parcel owned by the Permittee located immediately east of the Facility on the east side of Outlet Creek. The enhancement wetland

DRAFT

consists of approximately 30 acres of free water surface, with the remaining acreage set aside for potential wetland and floodplain mitigation and an Outlet Creek setback zone. The wetland consists of three cells; each planted with a variety of wetland species and operated at a normal operating depth of 1 to 2 feet. The wetland is lined with clay soils. The exterior berms surrounding the cells are approximately 8 to 10 feet tall and the interior berms are 6 feet tall. The Permittee provides for approximately 3 feet of active storage above the normal operating depth providing approximately 90 acre-feet (ac-ft) of active storage and buffering prior to discharge to Outlet Creek. An additional 90 ac-ft of storage (3 foot depth) above the active storage volume is available for use during critical discharge periods to help reduce potential discharge violations, provide capacity for future growth, and provide another layer of redundancy and reliability. Each cell in the enhancement wetland is stepped down approximately 2 feet from south to north. Flow between the cells is controlled by a series of weir structures.

From October 1 through May 14 each year, treated wastewater from the enhancement wetland may be discharged to Outlet Creek at Discharge Point 003, which is located at the north end of the wetland. The discharge from the wetland passes through a slide gate with a motor actuated operator to a 30-inch outfall pipe. The outfall pipe incorporates flow metering to provide control of the outfall discharge proportional to the measured flow in Outlet Creek. The outfall pipe consists of approximately 600 feet of 30-inch pipe, a metering vault, and a concrete outfall structure located at the creek. Utilizing the full capacity of the enhancement wetland, the Facility is able to maintain the 10 percent discharge rate 99.5 percent of the time at an average monthly design capacity of 10.0 mgd.

From May 15 through September 30 and any other time seasonally appropriate, treated wastewater is recycled for spray irrigation of near-by and adjacent pastureland at Discharge Point 004. The irrigation pump station includes vertical turbine pumps located in a rectangular reinforced concrete wet well. The wet well is connected to the last cell of the enhancement wetland though a weir designed to maintain a minimum depth of 1.5 feet in the wetland to ensure optimum aquatic plant survival conditions. The pumps can be operated manually and automatically.

A 36-inch rotary fan press is used for the dewatering and drying process and mechanically separates liquids and solids, producing dewatered biosolids at 15 to 18 percent. The rotary fan press is capable of dewatering at a maximum rate of 40 gpm. The effluent from the rotary fan press is pumped into a 30 cubic yard dump box. Solids from the dump box dump into a containment area and are then transferred to the composting area. Supernate from the dump box is piped to the headworks.

Composting is achieved through a three-step process including mixing, composting and curing, and storage. Dewatered biosolids are mixed with wood chips or sawdust at a 1:1 ratio by a front-end loader on a paved area east of and adjacent to the northernmost equalization basin. After approximately 1 month of residence time, the mixture is moved to a compost pile where it continues to dry and composting begins. The compost pile is turned each month and is allowed to compost for 6 to 12 months. The compost mixture is then moved to a storage pile and allowed to cure for at least a year. The finished compost is then land applied on an 18-acre agricultural parcel owned by the Permittee and located immediately west of the Facility. Compost is applied to approximately one-third of the parcel (6 acres) each year. The section receiving compost is fenced to prohibit access by grazing livestock during the early portion of the growing season.

B. Discharge Points and Receiving Waters

During the discharge season (October 1 through May 14), wastewater may be discharged to Outlet Creek at Discharge Point 003 (39° 25’ 38” N latitude and 123° 20’ 37” W longitude), downstream of the confluence of Baechtel Creek and Broaddus Creek, within the Outlet Creek Hydrologic Subarea of the Upper Main Eel River Hydrologic Area.

DRAFT

From May 15 through September 30 and any other time seasonally appropriate, treated wastewater is recycled for spray irrigation of adjacent pastureland at Discharge Point 004.

The *Water Quality Control Plan for the North Coast Region* (hereinafter Basin Plan) limits discharges to the Eel River and its tributaries to 1 percent of the receiving water flow (1:100) unless an exception to the requirement is granted by the Regional Water Quality Control Board (Regional Water Board). (See section IV.C.1 of this Fact Sheet.) Exceptions are given for cause on a case-by-case basis, taking into consideration:

1. The reliability of the WWTF;
2. Whether the discharge of waste is limited to rates and constituent levels that protect the beneficial uses of the receiving waters;
3. Whether reasonable alternatives for reclamation have been addressed to limit the amount of the wastewater to be discharged;
4. Whether the exception complies with state and federal antidegradation policies; and
5. Whether there is any discharge of waste to surface waters during the period of May 15 through September 30.

In order to consistently achieve effluent of sufficient quality to protect beneficial uses and become eligible for an exception to the Basin Plan discharge rate requirements, the Permittee completed upgrades to the Facility in February 2013. As discussed in detail in section IV.C.1 of this Fact Sheet, improved treatment capabilities for conventional and biostimulatory pollutants from the upgraded Facility meet water quality criteria for the protection of surface water beneficial uses at a discharge rate up to 1:10 (10% of receiving water flow).

C. Summary of Existing Requirements and Self-Monitoring Report (SMR) Data

Effluent limitations contained in Order No. R1-2010-0017 for discharges from Discharge Points 002 and 003 (Monitoring Locations EFF-002 and EFF-003, respectively) and representative monitoring data from the term of Order No. R1-2010-0017 are as follows:

Table F-2. Historic Effluent Limitations and Monitoring Data – Discharge Point 002

Parameter	Units	Effluent Limitation			Monitoring Data (February 2013 – November 2014)		
		Average Monthly	Average Weekly	Maximum Daily	Highest Average Monthly Discharge	Highest Average Weekly Discharge	Highest Daily Discharge
Biochemical Oxygen Demand 5-day @ 20°C (BOD_5)	mg/L	10	15	--	5.8	10	--
	lbs/day[1]	334	500	--	32	55	--
	% Removal	85	--	--	NR[2]	--	--
Total Suspended Solids (TSS)	mg/L	10	15	--	5.5	18	--
	lbs/day[1]	334	500	--	27	74	--
	% Removal	85	--	--	NR[2]	--	--
pH	s.u.	--	--	6.5 – 8.5	--	--	6.5 – 7.5
Nitrogen, Total (as N)	mg/L	10.0	--	--	32	--	--
Total Coliform Organisms	MPN/100 mL	23[3]	230	--	23[4]	70	--

DRAFT

Parameter	Units	Effluent Limitation			Monitoring Data (February 2013 – November 2014)		
		Average Monthly	Average Weekly	Maximum Daily	Highest Average Monthly Discharge	Highest Average Weekly Discharge	Highest Daily Discharge

Table Notes:
1. Based on permitted average monthly flow of 4.0 mgd.
2. Not reported.
3. The median of all samples collected in a 30-day period.
4. Represents the maximum reported 30-day median.

Table F-3. Historic Effluent Limitations and Monitoring Data – Discharge Point 003

Parameter	Units	Effluent Limitation			Monitoring Data (February 2013 – November 2014)		
		Average Monthly	Average Weekly	Maximum Daily	Highest Average Monthly Discharge	Highest Average Weekly Discharge	Highest Daily Discharge
pH	s.u.	--	--	6.5 – 8.5	--	--	6.62 – 8.44
Cyanide, Total (as CN)	µg/L	4.3	--	8.5	2.1	--	2.1
Ammonia Nitrogen, Total (as N)	mg/L	[1]	--	[1]	0.52	--	0.52
Nitrogen, Total (as N)	mg/L	1.6/6.0[2]	--	--	5.1	--	--
Settleable Solids	ml/L	0.1	--	0.2	3	--	5
Discharge Rate	%	--	--	10[3]	NR[4]	--	--
Acute Toxicity	% Survival	--	--	70[5]/90[6]	NR[4]	--	--

Table Notes:
1. The average monthly effluent limitation for ammonia is determined based on the pH and temperature of the receiving water at the time the discharge is sampled. The maximum daily effluent limitation for ammonia is based on the pH of the receiving water at the time the discharge is sampled. See Attachments G-1 and G-2 of this Order.
2. The effluent limitation of 1.6 mg/L applies only under critical conditions which occur when receiving water in Outlet Creek is either greater than 15°C or flowing at less than 2.4 cubic feet per second (cfs). At all other times, the total nitrogen effluent limitation for Discharge Point 003 shall be 6.0 mg/L.
3. During the period from October 1 through May 14, discharges of treated wastewater shall not exceed 10 percent (1:10) of the upstream receiving water flow.
4. Not reported.
5. Minimum for any one bioassay: 70 percent survival.
6. Median for any three or more consecutive bioassays: at least 90 percent survival.

D. Compliance Summary

The Permittee was not assessed any administrative civil liability during the term of Order No. R1-2010-0017.

E. Planned Changes

The Permittee plans to install a more formal septic hauling station to alleviate processing demands on the treatment process. The septage station would include an alternate headworks

DRAFT

which would be accessed by haulers through a card key system. The septage would filter through the screening and grit removal process and go to a batch tank where random or targeted samples could be taken. The septage would then be treated in a polymer injection station, dewatered, and incorporated into the general composting area. Water extracted from the septage would be directed into the headworks for treatment.

The Permittee is also assessing the feasibility of producing Class A biosolids.

III. APPLICABLE PLANS, POLICIES, AND REGULATIONS

The requirements contained in this Order are based on the requirements and authorities described in this section.

A. Legal Authorities

This Order is issued pursuant to section 402 of the federal Clean Water Act (CWA) and implementing regulations adopted by the U.S. Environmental Protection Agency (U.S. EPA) and chapter 5.5, division 7 of the California Water Code (commencing with section 13370). It shall serve as a NPDES permit for point source discharges from this Facility to surface waters. This Order also serves as Waste Discharge Requirements (WDRs) pursuant to article 4, chapter 4, division 7 of the Water Code (commencing with section 13260) and a Master Recycling Permit pursuant to article 4, Chapter 7, division 7 of the Water Code (commencing with section 13500).

B. California Environmental Quality Act (CEQA)

Under Water Code section 13389, this action to adopt an NPDES permit is exempt from the provisions of Chapter 3 of CEQA, (commencing with section 21100) of Division 13 of the Public Resources Code.

This action also involves the adoption of WDRs and a Master Recycling Permit for the discharge of recycled water to land. This action is exempt from the provisions of the California Environmental Quality Act (Public Resources Code, Section 21000, *et seq*.), because this action is not a "project" as defined under Public Resources Code section 21065 and California Code of Regulations, title 14, section 15378; because it has no potential for resulting in either a direct physical change in the environment, or a reasonably foreseeable indirect physical change in the environment, and is exempt from CEQA pursuant to California Code of Regulations, title 14, section 15061(b)(3). The adoption of the WDRs and a Master Recycling Permit will result in no changes to existing baseline conditions. The Permittee will continue to apply the reclamation plan resulting in no changes to the rate (agronomic), quantity, or location of application.

Furthermore, the action would be categorically exempt under Title 14, California Code of Regulations, section 15301, since it involves no expansion of use of existing facilities.

In order to allow reclamation at new site locations, the Permittee will need to conduct an environmental analysis of any potential impacts, and will act as the lead agency for CEQA. The Permittee must ensure all reclamation activities comply with the Recycling Specifications and Requirements contained in section IV.C of this Order.

C. State and Federal Laws, Regulations, Policies, and Plans

1. **Water Quality Control Plan.** The Regional Water Board adopted a *Water Quality Control Plan for the North Coast Region* (hereinafter Basin Plan) that designates beneficial uses, establishes water quality objectives, and contains implementation programs and policies to achieve those objectives for all waters addressed through the plan. In addition, the Basin Plan implements State Water Board Resolution No. 88-63, which establishes state policy that all waters, with certain exceptions, should be considered suitable or potentially suitable for municipal or domestic supply. Beneficial uses applicable to Outlet Creek are summarized in Table F-4, below:

DRAFT

Table F-4. Basin Plan Beneficial Uses

Discharge Point	Receiving Water Name	Beneficial Use(s)
002 and 003	Outlet Creek within the Outlet Creek Hydrologic Subarea of the Eel River Hydrologic Unit	Existing: Municipal and domestic supply (MUN); Agricultural supply (AGR); Industrial service supply (IND); Groundwater recharge (GWR); Navigation (NAV); Water contact recreation (REC-1); Non-contact water recreation (REC-2); Commercial and sport fishing (COMM); Warm freshwater habitat (WARM); Cold freshwater habitat (COLD); Wildlife habitat (WILD); Rare, threatened, or endangered species (RARE); Migration of aquatic organisms (MIGR); Spawning, reproduction, and/or early development (SPWN); and Aquaculture (AQUA). Potential: Industrial process supply (PRO); and Hydropower generation (POW).
002 and 004	Groundwater	Existing: Municipal and domestic supply (MUN); Agricultural supply (AGR); and Industrial service supply (IND) Native American Culture (CUL) Potential: Industrial process supply (PRO) Aquaculture (AQUA).

In addition to the beneficial uses set out in the Basin Plan, there are several implementation plans that include actions intended to meet water quality objectives and protect beneficial uses of the North Coast Basin. For the Eel River and its tributaries, no point source waste discharges are allowed during the period of May 15 through September 30 and for all other periods the receiving stream's flow must be at least 100 times greater than the waste flow unless an exception to the requirement is granted by the Regional Water Board.

Requirements of this Order implement the Basin Plan.

2. **National Toxics Rule (NTR) and California Toxics Rule (CTR).** U.S. EPA adopted the NTR on December 22, 1992, and later amended it on May 4, 1995 and November 9, 1999. About forty criteria in the NTR applied in California. On May 18, 2000, U.S. EPA adopted the CTR. The CTR promulgated new toxics criteria for California and, in addition, incorporated the previously adopted NTR criteria that were applicable in the state. The CTR was amended on February 13, 2001. These rules contain federal water quality criteria for priority pollutants.

3. **State Implementation Policy.** On March 2, 2000, the State Water Board adopted the *Policy for Implementation of Toxics Standards for Inland Surface Waters, Enclosed Bays, and Estuaries of California* (State Implementation Policy or SIP). The SIP became effective on

DRAFT

April 28, 2000, with respect to the priority pollutant criteria promulgated for California by the U.S. EPA through the NTR and to the priority pollutant objectives established by the Regional Water Board in the Basin Plan. The SIP became effective on May 18, 2000, with respect to the priority pollutant criteria promulgated by the U.S. EPA through the CTR. The State Water Board adopted amendments to the SIP on February 24, 2005, that became effective on July 13, 2005. The SIP establishes implementation provisions for priority pollutant criteria and objectives and provisions for chronic toxicity control. Requirements of this Order implement the SIP.

4. **Domestic Water Quality.** In compliance with Water Code section 106.3, it is the policy of the state of California that every human being has the right to safe, clean, affordable, and accessible water adequate for human consumption, cooking, and sanitary purposes. This Order promotes that policy by requiring discharges to meet maximum contaminant levels (MCLs) implemented by the Basin Plan that are designed to protect human health and ensure that water is safe for domestic use.

5. **Compliance Schedules and Interim Requirements.** The State Water Board adopted Resolution No. 2008-0025 on April 15, 2008, titled *Policy for Compliance Schedules in National Pollutant Discharge Elimination System Permits*, which includes compliance schedule policies for pollutants that are not addressed by the SIP. This Policy became effective on August 27, 2008.

   This Order does not include any compliance schedules or interim effluent limitations.

6. **Antidegradation Policy.** 40 C.F.R. section 131.12 requires that the state water quality standards include an antidegradation policy consistent with the federal policy. The State Water Board established California's antidegradation policy in State Water Board Resolution No. 68-16. Resolution No. 68-16 incorporates the federal antidegradation policy where the federal policy applies under federal law. Resolution No. 68-16 requires that existing water quality be maintained unless degradation is justified based on specific findings. The Regional Water Board's Basin Plan implements, and incorporates by reference, both the state and federal antidegradation policies. The permitted discharge must be consistent with the antidegradation provision of 40 C.F.R. section 131.12 and State Water Board Resolution No. 68-16. As discussed in detail in section IV.D.2 of this Fact Sheet, the permitted discharge is consistent with the antidegradation provision of 40 C.F.R. section 131.12 and State Water Board Resolution No. 68-16.

7. **Anti-Backsliding Requirements.** Sections 402(o)(2) and 303(d)(4) of the CWA and federal regulations at 40 C.F.R. section 122.44(l) restrict backsliding in NPDES permits. These anti-backsliding provisions require that effluent limitations in a reissued permit must be as stringent as those in the previous permit, with some exceptions in which limitations may be relaxed.

8. **Endangered Species Act Requirements.** This Order does not authorize an act that results in the taking of a threatened or endangered species or any act that is now prohibited, or becomes prohibited in the future, under either the California Endangered Species Act (Fish and Game Code sections 2050 to 2097) or the Federal Endangered Species Act (16 U.S.C.A sections 1531 to 1544). This Order requires compliance with effluent limits, receiving water limits, and other requirements to protect the beneficial uses of waters of the state. The Permittee is responsible for meeting all requirements of the applicable Endangered Species Act.

D. Impaired Water Bodies on CWA 303(d) List

Section 303(d) of the federal CWA requires states to identify waterbodies that do not meet water quality standards and are not supporting their beneficial uses after implementation of

DRAFT

technology-based effluent limitations on point sources. Each state must submit an updated list, the 303(d) List of Impaired Waterbodies, to U.S. EPA by April of each even numbered year. In addition to identifying the waterbodies that are not supporting beneficial uses, the 303(d) list also identifies the pollutant or stressor causing impairment and establishes a schedule for developing a control plan to address the impairment. The CWA requires development of a total maximum daily load (TMDL) for each 303(d) listed pollutant and water body contaminant. TMDLs establish the maximum quantity of a given pollutant that can be added to a water body from all sources without exceeding the applicable water quality standard for that pollutant and determine wasteload allocations (the portion of a TMDL allocated to existing and future point sources) and load allocations (the portion of a TMDL attributed to existing and future nonpoint sources).

On October 11, 2011, the U.S. EPA provided final approval of the 2008-2010 303(d) list of impaired water bodies prepared by the state. The list identifies the Upper Main Hydrologic Area of the Eel River Hydrologic Unit is 303(d) listed as impaired by sedimentation/siltation and temperature. On December 29, 2004, U.S. EPA approved a TMDL addressing sediment and temperature in the Upper Main Eel River and its tributaries, including Outlet Creek. Regarding temperature, the TMDL concludes that most sources of heat in the Upper Main Eel watershed are the result of nonpoint sources, primarily caused by removing riparian vegetation, timber harvesting, road building, grazing, and urbanization. As the critical time period for temperature is in the summer, the TMDL was established for that critical time period, which is also the time period when point source discharges from the Facility are prohibited. Because of the summer discharge prohibition, the Facility does not contribute to temperature loadings to the Upper Main Eel River. The TMDL states that there are no point sources in the Upper Main Eel Watershed, therefore the wasteload allocation in the watershed is zero. The Regional Water Board interprets this wasteload allocation to mean that, as long as the Permittee adheres to the summer discharge prohibition, it will be in compliance with the approved TMDL for temperature.

The TMDL establishes a maximum loading of 125 percent of the natural sediment loading for the watershed and further defines that loading rate as 388 tons of sediment per square mile of watershed per year. The TMDL found that nonpoint sources were primarily responsible for most sediment loading in the watershed, but identified CalTrans facilities and construction sites as point sources. The Facility was not identified as a point source and no wasteload allocation was established for the Facility. In order to be protective of Basin Plan water quality objectives for sediment in the Upper Main Eel watershed, this Order retains effluent concentration limitations for settleable solids and total suspended solids (TSS) from Order No. R1-2010-0017 for discharges to Outlet Creek.

E. Other Plans, Policies and Regulations

1. On May 2, 2006, the State Water Board adopted State Water Board Order No. 2006-0003-DWQ, Statewide General WDRs for Sanitary Sewer Systems and on August 6, 2013 adopted Order No. WQ 2013-0058-EXEC Amending Monitoring and Reporting Program for Statewide General Waste Discharge Requirements for Sanitary Sewer Systems. Order No. 2006-0003-DWQ requires that all public agencies that currently own or operate sanitary sewer systems apply for coverage under the General WDRs. The deadline for dischargers to apply for coverage was November 2, 2006. The Permittee applied for coverage and is subject to the requirements of Order Nos. 2006-0003-DWQ and WQ 2013-0058-EXEC and any future revisions thereto for operation of its wastewater collection system.

2. All areas within the Facility drain to two storm drain inlets on the property where storm water is routed to the headworks. State Water Board Water Quality Order No. 2014-0057-DWQ, NPDES General Permit No. CAS000001, General Permit for Storm Water Discharges Associated with Industrial Activities (Industrial Storm Water General Permit) does not

DRAFT

require facilities to obtain coverage if storm water is captured and treated and/or disposed of within the facility's NPDES permitted process wastewater or if storm water is disposed of evaporation ponds, percolation ponds, or combined sewer systems. Therefore, coverage under the Industrial Storm Water General Permit is not required for this Facility.

3. In 1996, the State Water Board and the California Department of Health Services (now State Water Board Division of Drinking Water or DDW) set forth principles, procedures, and agreements to which the agencies committed themselves relative to the use of recycled water in California, in a document titled *Memorandum of Agreement between the Department of Health Services and the State Water Resources Control Board on the Use of Reclaimed Water* (MOA). This Order is consistent with the MOA.

4. On February 3, 2009, the State Water Board adopted the Recycled Water Policy (State Water Board Resolution No. 2009-0011) for the purpose of increasing the use of recycled water from municipal wastewater sources in a manner that implements state and federal water quality laws. The Recycled Water Policy became effective on May 14, 2009. The Recycled Water Policy provides direction to the Regional Water Boards regarding the appropriate criteria to be used in issuing permits for recycled water projects and describes permitting criteria intended to streamline and provide consistency for the permitting of the vast majority of recycled water projects. Pertinent provisions and requirements of the Policy have been incorporated into this Order to address conditions specific to the Permittee's plan to implement water recycling.

The Recycled Water Policy recognizes the fact that some groundwater basins in the state contain salts and nutrients that exceed or threaten to exceed water quality objectives in the applicable Basin Plans, and that not all Basin Plans include adequate implementation procedures for achieving or ensuring compliance with the water quality objectives for salt or nutrients. The Recycled Water Policy further recognizes that these conditions can be caused by natural soils/conditions, discharges of waste, irrigation using surface water, groundwater or recycled water, and water supply augmentation using surface or recycled water, and that regulation of recycled water alone will not address these conditions. It is the intent of the Recycled Water Policy that salts and nutrients from all sources be managed on a basin-wide or watershed-wide basis in a manner that ensures attainment of water quality objectives and protection of beneficial uses. The Recycled Water Policy finds that the appropriate way to address salt and nutrient issues is through the development of regional or subregional Salt and Nutrient Management Plans (SNMPs) rather than through imposing requirements solely on individual recycled water projects.

This Order is consistent with the requirements of the Recycled Water Policy to implement an SNMP. The Recycled Water Policy currently requires monitoring for priority pollutants annually. This Order implements this requirement through the annual CTR priority pollutant monitoring requirement in the MRP that is required of the Permittee pursuant to the SIP.

5. On July 22, 2004, the State Water Board adopted State Water Board Order No. 2004-0012-DWQ, General Waste Discharge Requirements for the Discharge of Biosolids to Land for Use as a Soil Amendment in Agricultural, Silvicultural, Horticultural, and Land Reclamation Activities. The Order requires the Permittee to obtain coverage under Order No. 2004-0012-DWQ prior to any removal of biosolids from the Facility that will be land disposed on property owned or controlled by the Permittee.

6. Prior to making any change in the point of discharge, place of use, or purpose of use of treated wastewater that results in a decrease of flow in any portion of a watercourse, the Permittee must file a petition with the State Water Board, Division of Water Rights, and

DRAFT

receive approval for such a change. The State Water Board retains the jurisdictional authority to enforce such requirements under Water Code section 1211.

IV. RATIONALE FOR EFFLUENT LIMITATIONS AND DISCHARGE SPECIFICATIONS

The CWA requires point source dischargers to control the amount of conventional, non-conventional, and toxic pollutants that are discharged into the waters of the United States. The control of pollutants discharged is established through effluent limitations and other requirements in NPDES permits. There are two principal bases for effluent limitations in the Code of Federal Regulations: 40 C.F.R. section 122.44(a) requires that permits include applicable technology-based limitations and standards; and 40 C.F.R. section 122.44(d) requires that permits include water quality based effluent limitations (WQBELs) where there is a reasonable potential for the level of discharge to cause or contribute to an excursion about a state water quality standard.

A. Discharge Prohibitions

1. **Discharge Prohibition III.A.** The discharge of any waste not disclosed by the Permittee or not within the reasonable contemplation of the Regional Water Board is prohibited.

   This prohibition has been retained from Order No. R1-2010-0017 and is based on the Basin Plan and State Water Board Order No. WQO 2002-0012 regarding the petition of WDRs Order No. 01-072 for the East Bay Municipal Utility District and Bay Area Clean Water Agencies. In State Water Board Order No. WQO 2002-0012, the State Water Board found that this prohibition is acceptable in orders, but should be interpreted to apply only to constituents that are either not disclosed by the Permittee, or are not reasonably anticipated to be present in the discharge but have not been disclosed by the Permittee. It specifically does not apply to constituents in the discharge that do not have "reasonable potential" to exceed water quality objectives.

   The State Water Board has stated that the only pollutants not covered by this prohibition are those which were "*disclosed to the permitting authority and…can be reasonably contemplated*." [In re the Petition of East Bay Municipal Utilities District et al., (State Water Board, 2002) Order No. WQO 2002-0012, p. 24.] In that Order, the State Water Board cited a case which held the Permittee is liable for the discharge of pollutants "*not within the reasonable contemplation of the permitting authority…<u>whether spills or otherwise</u>…*" [*Piney Run Preservation Assn. v. County Commissioners of Carroll County, Maryland* (4th Cir. 2001) 268 F. 3d 255, 268.] Thus the State Water Board authority provides that, to be permissible, the constituent discharged (1) must have been disclosed by the Permittee and (2) can be reasonably contemplated by the Regional Water Board.

2. **Discharge Prohibition III.B.** Creation of pollution, contamination, or nuisance, as defined by section 13050 of the Water Code is prohibited.

   This prohibition has been retained from Order No. R1-2010-0017 and is based on section 13050 of the Water Code and section 5411 of the California Health and Safety Code. It is a standard condition/prohibition included in NPDES permits and waste discharge requirements adopted by the Regional Water Board.

3. **Discharge Prohibition III.C.** The discharge of sludge or digester supernatant is prohibited, except as authorized under section VI.C.5.c of this Order (Sludge Disposal and Handling Requirements).

   This prohibition has been retained from Order No. R1-2010-0017 and is based on restrictions on the disposal of sewage sludge found in federal regulations [40 C.F.R. Part 503 (Biosolids), Part 527, and Part 258] and Cal. Code of Regs, title 27.

DRAFT

4. **Discharge Prohibition III.D.** The discharge or reclamation use of untreated or partially treated waste (receiving a lower level of treatment than described in section II.A of the Fact Sheet) from anywhere within the collection, treatment, or disposal systems is prohibited, except as provided for in section IV.C (Recycling Specifications and Requirements) and in Attachment D, Standard Provisions G (Bypass) and H (Upset).

   This prohibition has been retained from Order No. R1-2010-0017 and is based on the Basin Plan to protect the beneficial uses of the receiving water from unpermitted discharges, and the intent of the Water Code sections 13260 through 13264 relating to the discharge of waste to waters of the state without filing for and being issued an Order. This prohibition applies to spills not related to sanitary sewer overflows (SSOs) and other unauthorized discharges of wastewater within the collection, treatment, and disposal facilities. The discharge of untreated or partially treated wastewater from the collection, treatment, or disposal facility represents an unauthorized bypass pursuant to 40 C.F.R. section 122.41(m) or an unauthorized discharge which poses a threat to human health and/or aquatic life, and therefore is explicitly prohibited by this Order.

5. **Discharge Prohibition III.E.** Any SSO that results in a discharge of untreated or partially treated wastewater to (a) waters of the state or (b) land, and creates pollution, contamination, or nuisance, as defined in Water Code section 13050 is prohibited.

   This prohibition has been retained from Order No. R1-2010-0017 and applies to spills related to SSOs and is based on state standards. This prohibition is stricter than the prohibitions stated in State Water Board Order 2006-003-DWQ, Statewide General Waste Discharge Requirements for Sanitary Sewer Systems. Order No. 2006-0003-DWQ prohibits SSOs that result in the discharge of untreated or partially treated wastewater to waters of the United States and SSOs that cause a nuisance, compared to Prohibition III.E of this Order, which prohibits SSO discharges that create nuisance or pollution to waters of the state and land for a more complete protection of human health. This prohibition is necessary because of the prevalence of high groundwater in the North Coast Region, and this Region's reliance on groundwater as a drinking water source.

6. **Discharge Prohibition III.F.** The discharge of waste for which the Permittee has not explicitly been permitted is prohibited, except for use for fire suppression as provided in Cal. Code of Regs title 22, sections 60307(a) and 60307(b).

   This prohibition is clarified and retained from Order No. R1-2010-0017 and is a standard Regional Water Board prohibition that is included in WDRs when there are discharges to land. Land used for the application of recycled water must be owned by the Permittee or be under the control of the Permittee by contract so that the Permittee maintains a means for ultimate disposal.

7. **Discharge Prohibition III.G.** The discharge of waste at any point not described in Finding II.B of the Fact Sheet or authorized by a permit issued by the State Water Board or another Regional Water Board is prohibited.

   This prohibition is retained from Order No. R1-2010-0017 and is a standard Regional Water Board prohibition that allows the Permittee to discharge waste only in accordance with WDRs. It is based on sections 301 and 402 of the federal CWA and section 13263 of the Water Code.

8. **Discharge Prohibition III.H.** The discharge of waste to the Eel River and its tributaries is prohibited during the period from May 15 through September 30 of each year.

DRAFT

This prohibition is required by the Basin Plan. The Basin Plan prohibits discharges to the Eel River and its tributaries during the period May 15 through September 30 (Chapter 4, Waste Discharge prohibitions for the North Coastal Basin).

9. **Discharge Prohibition III.I.** The discharge of septage to a location other than an approved septage receiving station is prohibited.

   This prohibition is necessary to ensure that the Permittee is aware of all discharges of septage into the treatment system so that pollutants associated with domestic septage do not pass through or interfere with the operation or performance of the Facility.

10. **Prohibition III.J.** The mean daily flow of waste through the Facility shall not exceed 4.0 mgd, measured continuously at Monitoring Location EFF-002, calculated daily and averaged over a calendar month.

    This prohibition represents a fraction of the Facility's treatment and hydraulic design capacity of 7.0 mgd. This prohibition corresponds to the treatment capacity deemed necessary by the Permittee to adequately treat current and anticipated waste flows for the term of this Order. As the community grows, the Permittee may request that this limit be increased, up to the full treatment capacity design of 7.0 mgd. Any additional increase from the current limit of 4.0 mgd will require that the permit be reopened and must be approved by the Regional Water Board after appropriate analysis and consideration.

B. Technology-Based Effluent Limitations

1. Scope and Authority

Section 301(b) of the CWA and U.S. EPA permit regulations at 40 C.F.R. section 122.44 require that permits include conditions meeting applicable technology-based requirements at a minimum, and any more stringent effluent limitations necessary to meet applicable water quality standards. The discharge authorized by this Order must meet minimum federal technology-based requirements based on Secondary Treatment Standards at 40 C.F.R. part 133 and Best Professional Judgment (BPJ) in accordance with 40 C.F.R. section 125.3.

Regulations promulgated in 40 C.F.R. section 125.3(a)(1) require technology-based effluent limitations for municipal dischargers to be placed in NPDES permits based on Secondary Treatment Standards or Equivalent to Secondary Treatment Standards.

The Federal Water Pollution Control Act Amendments of 1972 (PL 92-500) established the minimum performance requirements for POTWs [defined in section 304(d)(1)]. Section 301(b)(1)(B) of that Act requires that such treatment works must, as a minimum, meet effluent limitations based on secondary treatment as defined by the U.S. EPA Administrator.

Based on this statutory requirement, U.S. EPA developed secondary treatment regulations, which are specified in 40 C.F.R. part 133. These technology-based regulations apply to all municipal wastewater treatment plants and identify the minimum level of effluent quality attainable by secondary treatment in terms of BOD_5, TSS, and pH, as follows:

a. BOD_5 and TSS

- **i.** The 30-day average shall not exceed 30 mg/L.
- **ii.** The 7-day average shall not exceed 45 mg/L.
- **iii.** The 30-day average percent removal shall not be less than 85%.

DRAFT

b. pH

The pH shall be maintained within the limits of 6.0 to 9.0.

The effluent limitation for pH required to meet the water quality objective for hydrogen ion concentration (pH) is contained in the Basin Plan, Table 3-1.

In addition, 40 C.F.R. section 122.45(f) requires the establishment of mass-based effluent limitations for all pollutants limited in Orders, except for 1) pH, temperature, radiation, or other pollutants which cannot be appropriately expressed by mass, 2) when applicable standards and limitations are expressed in terms of other units of measure, and 3) where the permit limitation is established on a case-by-case basis under 40 C.F.R. section 125.3 and limitations expressed in terms of mass are infeasible because the mass of the pollutant discharged cannot be related to a measure of operation, and permit conditions ensure that dilution will not be used as a substitute for treatment.

Technology-based effluent limitations may be set on a case-by-case basis under section 402(a)(1) of the CWA to the extent that EPA-promulgated effluent limitations are inapplicable based upon the available information and unique factors related to the applicant. A combination of EPA-promulgated effluent limitations and effluent limitations developed under a case-by-case basis scenario may be applied to carry out the provisions of the CWA. "Best Practicable Control Technology" (BPT) requirements may be established by a permitting authority on a case-by-case basis considering the appropriate factors listed at 40 C.F.R. section 125.3(d)(1). Factors to be considered for BPT requirements include:

a. The total cost of application of the technology in relation to the effluent reduction benefits to be achieved from such application;

b. The age of equipment and facilities involved;

c. The process employed;

d. The engineering aspects of the application of various types of control techniques;

e. Process changes; and

f. Non-water quality environmental impacts (including energy requirements).

2. Applicable Technology-Based Effluent Limitations

a. BOD_5 and TSS. As described above, the secondary treatment standards at 40 C.F.R. part 133 establish the minimum level of effluent quality attainable by secondary treatment in terms of BOD_5 and TSS.

Treated effluent from the Facility may be discharged to Outlet Creek just downstream of the confluence of Baechtel Creek and Broaddus Creek during the winter discharge period of October 1 to May 14. The Facility is located in Little Lake Valley in the upper portion of the Eel River watershed. Stream flows in Little Lake Valley fluctuate rapidly, increasing in response to storm events and diminishing rapidly after each storm. The Permittee completed upgrades to the Facility, including an enhanced extended aeration activated sludge mechanical secondary treatment process with nutrient removal, UV disinfection, followed by effluent treatment and storage within an enhancement wetland, to comply with the criteria for an exception from the rate limitations set forth in Prohibition 3 of the Basin Plan, which are discussed in detail under section IV.C.1 of this Fact Sheet. In accordance with 40 C.F.R. section 125.3(c), a combination of U.S. EPA-promulgated and case-by-case technology-based effluent limitations has been established for the Facility. In setting case-by-case limitations pursuant to 40 C.F.R.

DRAFT

section 125.3 and based on BPT, the Regional Water Board considered the factors set forth in 40 C.F.R. section 125.3(d). This information was provided by the Permittee in its March 2007 *Variance Request for an Exception to the Water Quality Control Plan for the North Coast Region Discharge Rate Limitation* (Exception Request). The Exception Request, which demonstrated the capabilities of the Facility, explains that the upgraded Facility is capable of consistently treating wastewater to enhanced secondary level quality. Enhanced secondary level treatment is defined under these circumstances as the ability to achieve 10 mg/L as a monthly average for BOD_5 and TSS. An average weekly effluent limitation for BOD_5 and TSS has also been established in the Order as required by 40 C.F.R. section 122.45(d)(2), which states that effluent limitations for POTWs must be expressed as average weekly and average monthly limitations unless impracticable. In accordance with 40 C.F.R. section 133.101, the average weekly effluent limitation was calculated by multiplying the average monthly limitation of 10 mg/L by 1.5 to obtain a result of 15 mg/L. Concentration-based limitations for BOD_5 and TSS reflect enhanced secondary treatment and are more restrictive than those required by 40 C.F.R. part 133. This Order requires compliance with these effluent limitations to be met at the point of discharge from the mechanical portion of the Facility to the enhancement wetland at Discharge Point 002 (Monitoring Location EFF-002).

In addition to concentration limitations, 40 C.F.R. section 133.102, in describing the minimum level of effluent quality attainable by secondary treatment, states that the 30-day average percent removal of BOD_5 and TSS shall not be less than 85 percent. This Order contains a limitation requiring an average of 85 percent removal of BOD_5 and TSS over each calendar month.

b. **pH.** The secondary treatment regulations at 40 C.F.R. part 133 require that pH be maintained between 6.0 and 9.0 standard units. Note that a more stringent effluent limitation range of 6.5 – 8.5 for pH required to meet the water quality objective for hydrogen ion concentration (pH) in the Eel River contained in Basin Plan, Table 3-1.

c. **Mass-Based Effluent Limitations.** Federal regulations at 40 C.F.R. section 122.45(f) require that, except under certain conditions, all permit limits, standards, or prohibitions be expressed in terms of mass units. Among the conditions exempting the application of mass-based limitations is section 40 C.F.R. section 122.45(f)(1)(i), which does not require mass-based limitations "*for pH, temperature, and radiation, or other pollutants which cannot appropriately be expressed by mass.*" Consistent with Order No. R1-2010-0017, this Order includes mass-based effluent limitations for BOD_5 and TSS. Because pH cannot appropriately be expressed by mass, this Order does not include mass-based effluent limitations for pH per the exception in 40 C.F.R. section 122.45(f)(1)(i).

Table F-5. Summary of Technology-Based Effluent Limitations – Discharge Point 002

Parameter	Units	Effluent Limitations				
		Average Monthly	Average Weekly	Maximum Daily	Instantaneous Minimum	Instantaneous Maximum
Biochemical Oxygen Demand 5-day @ 20°C (BOD_5)	mg/L	10	15	--	--	--
	lbs/day[1]	334	500	--	--	--
	% Removal	85	--	--	--	--
pH	standard units	--	--	--	6.0[2]	9.0[2]

Parameter	Units	Effluent Limitations				
		Average Monthly	Average Weekly	Maximum Daily	Instantaneous Minimum	Instantaneous Maximum
Total Suspended Solids (TSS)	mg/L	10	15	--	--	--
	lbs/day[1]	334	500	--	--	--
	% Removal	85	--	--	--	--

Table Notes:
1. Mass-based effluent limitations are based on the permitted average dry weather flow of 4.0 mgd.
2. This Order includes final instantaneous minimum and maximum effluent limitations for pH of 6.5 and 8.5, respectively, based on the more stringent water quality criteria.

C. Water Quality-Based Effluent Limitations (WQBELs)

1. Scope and Authority

CWA Section 301(b) and 40 C.F.R. section 122.44(d) require that permits include limitations more stringent than applicable federal technology-based requirements where necessary to achieve applicable water quality standards.

Section 122.44(d)(1)(i) of 40 C.F.R. requires that permits include effluent limitations for all pollutants that are or may be discharged at levels that have the reasonable potential to cause or contribute to an exceedance of a water quality standard, including numeric and narrative objectives within a standard. Where reasonable potential has been established for a pollutant, but there is no numeric criterion or objective for the pollutant, WQBELs must be established using: (1) U.S. EPA criteria guidance under CWA section 304(a), supplemented where necessary by other relevant information; (2) an indicator parameter for the pollutant of concern; or (3) a calculated numeric water quality criterion, such as a proposed state criterion or policy interpreting the state's narrative criterion, supplemented with other relevant information, as provided in section 122.44(d)(1)(vi).

The process for determining reasonable potential and calculating WQBELs when necessary is intended to protect the designated uses of the receiving water as specified in the Basin Plan, and achieve applicable water quality objectives and criteria that are contained in other state plans and policies, or any applicable water quality criteria contained in the CTR and NTR.

Section 4 of the Basin Plan limits discharges to the Eel River and its tributaries to releases not exceeding 1 percent (1:100) of the receiving stream's flow during the allowable discharge season. The Basin Plan indicates that the Regional Water Board will consider for cause exceptions to the waste discharge rate limitations and requires that exceptions be defined in NPDES permits for each discharger, on a case by case basis. The Permittee has applied for an exception to the waste discharge rate limitation. The Permittee has demonstrated consistency with Basin Plan exception requirements for a discharge rate at 10 percent of the receiving water flow (1:10) as follows:

a. *The wastewater treatment facility shall be reliable.* The Permittee constructed upgrades to the Facility including an enhanced extended aeration activated sludge mechanical secondary treatment process with nutrient removal, UV disinfection, followed by enhanced effluent treatment and storage within new enhancement wetlands. UV disinfection has been shown to be more effective than chlorine in denaturing viruses and provides a higher level of pathogen removal than chlorine disinfection. Extended aeration and treatment wetland (enhancement wetland) technologies applied at the Facility produce reliably high quality effluent of enhanced secondary level quality.

DRAFT

b. *Reliability shall be demonstrated through analysis of the features of the facility including, but not limited to, system redundancy, proper operation and maintenance, and backup storage capacity to prevent the threat of pollution or nuisance.* The Facility is designed to accept a wide range of hydraulic loads through the headworks facility, mechanical activated sludge process, and a unit processes control system. The Facility has the ability to store both influent and effluent in the existing 16 million gallon storm bypass/overflow ponds. This upfront storage can be used to equalize high influent flows and provide emergency storage in the event of mechanical treatment process upset or routine operation and maintenance needs. Emergency storage of 29 million gallons (90 ac-ft) of effluent can be accommodated in the enhancement wetlands. Redundancy in the power systems is achieved through main power transmission lines and emergency power generators. Additionally, the enhancement wetland operates without electrical energy and will remain functional through any power upsets.

c. *The discharge of waste shall be limited to rates and constituent levels which protect the beneficial uses of the receiving waters.* The Permittee submitted a March 2007 *Variance Request for an Exception to the Water Quality Control Plan for the North Coast Region Discharge Rate Limitation* (Exception Request). The analysis provided by the Permittee in the Exception Request, and reviewed by the Regional Water Board Staff, demonstrates that the discharge from the Facility is limited to concentrations and rates protective of beneficial uses identified under Table F-4 of this Fact Sheet.

d. *Protection shall be demonstrated through analysis of all the beneficial uses of the receiving waters. For receiving waters which support domestic water supply (MUN) and water contact recreation (REC1), analysis shall include expected normal and extreme weather conditions within the discharge period, including estimates of instantaneous and long-term minimum, average, and maximum discharge flows and percent dilution in receiving waters. The analysis shall evaluate and address cumulative effects of all discharges, including point and nonpoint source contributions, both in existence and reasonably foreseeable. For receiving waters which support domestic water supply (MUN), the Regional Water Board shall consider the California Department of Health Services evaluation of compliance with the Surface Water Filtration and Disinfection Regulations contained in Section 64650 through 64666, Chapter 17, title 22 of the California Code of Regulations. Demonstration of protection of beneficial uses shall include consultation with the California Department of Fish and Game regarding compliance with the California Endangered Species Act.*

The Exception Request includes an analysis that compared the potential cumulative effects of the discharge of the enhanced secondary treated wastewater that could occur under extreme conditions on the existing receiving water quality, with the effluent quality from the former treatment system, and modeled the projected conditions. Constituents that were identified and compared to water quality objectives in the Basin Plan for the protection of beneficial uses include: color, taste and odor, floating materials, suspended material, settleable material, oil and grease, biostimulatory substances (i.e., nitrogen, phosphorus, and chlorophyll-a), sediment, turbidity, dissolved oxygen, pH, bacteria (i.e., total coliform and fecal coliform), temperature, toxicity (i.e., whole effluent toxicity, ammonia toxicity, and nitrate toxicity), pesticides, chemical constituents (i.e., specific conductance, total dissolved solids, cyanide, and dichlorobromomethane), and radioactivity.

e. *The exception shall be limited to that increment of wastewater which remains after reasonable alternatives for reclamation have been addressed.* The Permittee reclaims all treated wastewater from May 15 through September 30 each year. Additional periods of reclamation occur as weather permits. The Permittee indicated in the Exception

Request that further opportunities to reclaim water have been evaluated in the past, however the industries identified that might use the recycled water are no longer in operation. The Permittee plans to explore additional reclamation opportunities in the future, including irrigation of community areas such as parks and ball fields.

f. *The exception shall comply with State Water Board Resolution No. 68-16, "Statement of Policy with Respect to Maintaining High Quality Waters in California," and the federal regulations covering antidegradation (40 C.F.R. § 131.12).* The Exception Request concluded that the upgraded Facility complies with and meets the requirements of the state and federal antidegradation policies, as outlined below:

i. Existing water quality objectives and beneficial uses of Outlet Creek and the Eel River will be protected and/or not adversely affected.

ii. The upgraded Facility is necessary to the economic and social needs of the Willits, Brooktrails, and Meadowbrook Manor communities.

iii. The upgraded Facility provides a best practicable treatment method for water quality protection, and reducing and managing effluent nutrient loads into Outlet Creek.

iv. The upgraded Facility will improve existing water quality conditions in Outlet Creek.

v. The upgraded Facility discharging effluent at a 10 percent discharge rate provides the same or better water quality protection as a 1:100 condition.

g. *There shall be no discharge of waste during the period May 15 through September 30.* The Order prohibits discharges to surface water between May 15 and September 30 each year, during which time the Permittee reuses effluent for spray irrigation onto adjacent pasture land.

In conjunction with the Exception Request, the Permittee identified constituents of concern associated with discharges from the upgraded Facility. Effluent and receiving water analyses coupled with computer modeling evaluated during the development of Order No. R1-2010-0017 demonstrated reasonable potential for discharges from the upgraded Facility to cause or contribute to exceedances of applicable water quality criteria associated with ammonia, cyanide, nitrate, total nitrogen, pH, settleable solids, and total coliform organisms. Based on actual effluent and receiving water monitoring data collected from the upgraded Facility between February 2013 and April 2014, discharges from the upgraded Facility do not have reasonable potential to cause or contribute to exceedances of applicable water quality criteria for cyanide, but do have reasonable potential to cause or contribute to exceedances of applicable water quality criteria for bis (2-ethylhexyl) phthalate and copper. Therefore, WQBELs must be developed for ammonia, bis (2-ethylhexyl) phthalate, copper, nitrate, total nitrogen, pH, settleable solids, and total coliform organisms. Based upon the analyses provided in the Exception Request, which compared the constituents of concern to the water quality criteria for the protection of beneficial uses of receiving water, the WQBELs established in this Order will protect beneficial uses at the increased rate of discharge (1:10).

2. Applicable Beneficial Uses and Water Quality Criteria and Objectives

a. Beneficial Uses. Beneficial use designations for receiving waters for discharges from the Facility are presented in section III.C.1 of this Fact Sheet.

b. Basin Plan Water Quality Objectives. In addition to the specific water quality objectives indicated above, the Basin Plan contains narrative objectives for color,

DRAFT

tastes and odors, floating material, suspended material, settleable material, oil and grease, biostimulatory substances, sediment, turbidity, pH, dissolved oxygen, bacteria, temperature, toxicity, pesticides, chemical constituents, and radioactivity that apply to inland surface waters, enclosed bays, and estuaries, including the Eel River and its tributaries. For waters designated for use as domestic or municipal supply (MUN), the Basin Plan establishes as applicable water quality criteria the MCLs established by the State Water Board, Division of Drinking Water (DDW) for the protection of public water supplies at title 22 of the CCR section 64431 (Inorganic Chemicals) and section 64444 (Organic Chemicals).

c. **SIP, CTR, and NTR.** Water quality criteria and objectives applicable to this receiving water are established by the CTR, established by the U.S. EPA at 40 C.F.R. section 131.38; and the NTR, established by the U.S. EPA at 40 C.F.R. section 131.36. Criteria for most of the 126 priority pollutants are contained within the CTR and the NTR.

The SIP, which is described in section III.C.3 of this Fact Sheet, includes procedures for determining the need for, and the calculation of, WQBELs and requires Permittees to submit data sufficient to do so.

At title 22, division 4, chapter 15 of the CCR, DDW has established MCLs for certain pollutants for the protection of drinking water. Chapter 3 of the Basin Plan establishes these MCLs as water quality objectives applicable to receiving waters with the beneficial use designation of municipal and domestic supply.

Aquatic life freshwater and saltwater criteria are identified in the CTR and NTR as criterion maximum concentrations (CMC) and criterion continuous concentrations (CCC). The CTR defines the CMC as the highest concentration of a pollutant to which aquatic life can be exposed for a short period of time without deleterious effects and the CCC as the highest concentration of a pollutant to which aquatic life can be exposed for an extended period of time (4 days) without deleterious effects. The CMC is used to calculate an acute or 1-hour average numeric effluent limitation and the CCC is used to calculate a chronic or 4-day average numeric effluent limitation. Aquatic life freshwater criteria were used for the Reasonable Potential Analysis.

Human health criteria are further identified as "water and organisms" and "organisms only". "Water and organism" criteria are designed to address risks to human health from consumption of drinking water, fish and shellfish. The criteria from the "water and organisms" column of CTR were used for the RPA because the Basin Plan identifies that the receiving water, Outlet Creek, tributary to the Eel River, has the beneficial use designation of municipal and domestic supply.

3. Determining the Need for WQBELs

NPDES regulations at 40 C.F.R. section 122.44(d) require effluent limitations to control all pollutants which are or may be discharged at a level which will cause, have the reasonable potential to cause, or contribute to an excursion above any state water quality standard.

a. Non-Priority Pollutants

i. **pH.** The effluent limitation for pH of 6.5 to 8.5 is retained from Order No. R1-2010-0017. This limitation is based on the water quality objective for Outlet Creek established in Chapter 3, Table 3-1 of the Basin Plan. Federal technology-based requirements prescribed in 40 C.F.R. part 133 are not sufficient to meet these Basin Plan water quality standards. Consistent with Order No. R1-2010-

DRAFT

0017, this Order applies the effluent limitations for pH at Discharge Points 002 and 003.

ii. **Total Coliform Bacteria.** Coliform bacteria are a pollutant of concern in all wastewaters of domestic origin, and therefore, this Order includes effluent limitations for total coliform bacteria. These effluent limitations will ensure that water quality objectives for bacteria, as established by Chapter 3 of the Basin Plan, will be maintained. The specific limitations are based on requirements established by DDW at title 22, Cal. Code of Regs, Division 4, Chapter 3 (Water Recycling Criteria), and are those levels of bacteria required for the reclamation use of treated wastewater for surface irrigation of (i) pasture used for animals producing milk for human consumption and (ii) any nonedible vegetation where access is controlled. Consistent with Order No. R1-2010-0017, this Order applies the effluent limitations for total coliform bacteria at Discharge Point 002.

iii. **Settleable Solids.** Effluent limitations for settleable solids are retained from Order No. R1-2010-0017 and reflect levels of treatment attainable by secondary treatment facilities. This limitation is based on the water quality objective prohibiting bottom deposits for all surface waters of the North Coast Region established by the Basin Plan. Consistent with Order No. R1-2010-0017, this Order applies the effluent limitations for settleable solids at Discharge Point 003.

iv. **Flow Ratio.** The Basin Plan prohibits discharges to the Eel River or its tributaries which are greater than one percent of the receiving stream's flow during the period from October 1 through May 14 (Chapter 4, North Coastal Basin Discharge Prohibition No.3). The Permittee has submitted an Exception Request consistent with exception criteria applicable to the Basin Plan prohibition and is intended to protect water quality and beneficial uses during critical low flow periods of the year. Consistent with Order No. R1-2010-0017, this Order includes a discharge rate limitation requiring that discharges of wastewater to Outlet Creek / the Eel River during the period of October 1 through May 14 shall not exceed 10 percent (1:10) of the receiving water flow. Consistent with Order No. R1-2010-0017, this Order applies the effluent limitations for discharge rate at Discharge Point 003.

v. **Nitrogen Compounds.** Untreated domestic wastewater contains ammonia nitrogen. Nitrification is a biological process that converts ammonia to nitrite and nitrate. Denitrification is a process that converts nitrate to nitrogen gas, which is then released to the atmosphere. Inadequate or incomplete nitrification may result in the discharge of ammonia to the receiving stream and inadequate or incomplete denitrification may result in the discharge of nitrate to the receiving stream. The Facility is designed to use nitrification to remove ammonia from the waste stream and denitrification to remove nitrate from the waste stream, culminating in an overall reduction in total nitrogen.

(a) Total Nitrogen. The Basin Plan contains a narrative water quality objective for biostimulatory substances that states, "[w]*aters shall not contain biostimulatory substances in concentrations that promote aquatic growths to the extent that such growths cause nuisance or adversely affect beneficial uses*." The Regional Water Board is increasingly concerned about the biostimulatory properties of discharges to surface waters in the North Coast Region. The Exception Request evaluated the potential for biostimulatory effects specific to Outlet Creek from nutrients, such as phosphorus and nitrogen containing compounds, common to treated wastewaters.

Stimulation of biological growth can diurnally deplete dissolved oxygen in receiving water below Basin Plan criteria.

Results from site-specific monitoring and modeling evaluated during the development of Order No. R1-2010-0017 indicated that nitrogen is the potential limiting nutrient for biostimulatory activity in Outlet Creek and the Eel River. Table 5-6 of the Exception Request indicates that the expected concentration of total nitrogen in effluent from the mechanical extended aeration activated sludge treatment process is 8.0 mg/L. Table 5-7 of the Exception Request indicates that the fall and winter season concentration of total nitrogen expected in the discharge from the enhancement wetland will be less than 6.0 mg/L. The Exception Request further indicates that total nitrogen concentrations in the effluent to Outlet Creek during the spring time growing season will be less than 1.6 mg/L. Based upon the biostimulatory analysis in the Exception Request, the discharge from the Facility at a dilution ratio of 1:10 is expected to increase the overall background total nitrogen levels which will cause an increase in benthic biomass levels in Outlet Creek. However, modeling indicates that the discharge from the Facility at a 1:10 dilution ratio will significantly decrease total nitrogen loads compared to the discharge from the former treatment system at a 1:100 dilution ratio and will not increase benthic biomass levels above those for the previous permitted condition. Modeling results also indicate that the increased benthic biomass from the discharge of effluent from the Facility at a 1:10 dilution ratio would not significantly lower minimum dissolved oxygen levels below background conditions.

In order to support the Exception Request, protect groundwater quality, and ensure proper operation of the Facility, and consistent with Order No. R1-2010-0017, this Order includes an effluent limitation for total nitrogen at 10.0 mg/L to be met at the point of discharge into the enhancement wetland (Discharge Point 002). The Order includes two additional limitations for total nitrogen at the discharge from the enhancement wetland into Outlet Creek (Discharge Point 003) of 6.0 mg/L under most operating conditions and 1.6 mg/L during critical receiving water conditions which occur primarily in the spring. These effluent limitations have been selected based upon results from data and modeling in the Exception Request to protect surface water quality and mitigate biostimulatory effects. Confirmation of modeling assumptions and associated effluent limitations will be evaluated based upon ongoing monitoring of actual conditions over time from the upgraded Facility.

(b) Nitrate. Nitrate is known to cause adverse health effects in humans. For waters designated as domestic or municipal supply, the Basin Plan (Chapter 3) adopts the MCLs, established by DDW for the protection of public water supplies at title 22 of the CCR, sections 64431 (Inorganic Chemicals) and 64444 (Organic Chemicals), as applicable water quality criteria. The MCL for nitrate (10 mg/L as N) is therefore applicable as a water quality criterion. In order to support the Exception Request, this Order includes effluent limitations for total nitrogen at 10.0 mg/L which will serve for the protection of human health as well as prevention of biostimulatory effects which could result in diurnal swings of dissolved oxygen concentrations in the receiving water below Basin Plan criteria as described above. Therefore, an individual limitation for nitrate has not been established.

DRAFT

(c) Ammonia. Ammonia is known to cause toxicity to aquatic organisms in surface waters. The Basin Plan establishes a narrative water quality objective for toxicity, stating that "[a]*ll waters shall be maintained free of toxic substances in concentrations that are toxic to, or that produce detrimental physiological responses in human, plant, animal, or aquatic life*." Due to concerns regarding ammonia toxicity, the Regional Water Board relies on U.S. EPA's recommended water quality criteria for ammonia in fresh water from the 2013 Aquatic Life Ambient Water Quality Criteria for Ammonia – Freshwater, EPA 822-R-13-001 (April 2013) to interpret the Basin Plan's narrative objective for toxicity. U.S. EPA has recommended acute and chronic water quality criteria for the protection of aquatic life, including salmonids and sensitive freshwater mussel species in the Family Unionidae that are more sensitive to ammonia than salmonids. The acute criteria are based on receiving water pH and temperature and the presence/absence of salmonids. The chronic criteria are based on pH and temperature.

In Order No. R1-2010-0017, the Regional Water Board assessed reasonable potential to exceed the 1999 ammonia criteria using potential worst-case conditions (pH of 8.5 and temperature of 20°C) as reported in the Exception Request, which resulted in acute and chronic criteria of 2.14 mg/L and 0.76 mg/L. For this Order, the Regional Water Board has considered the actual conditions documented in the receiving water for discharges from the Facility (paired upstream receiving water pH of 7.49 and temperature of 14.3°C, the known presence of salmonids, and assumed presence of mussels) to calculate U.S. EPA's 2013 recommended criteria for protection of aquatic life, which result in acute and chronic criteria of 13 mg/L and 2.0 mg/L, respectively.

Per the Exception Request, ammonia concentrations from the upgraded Facility were expected to be less than 1.0 mg/L. Modeling conducted as part of the Exception Request indicated that the discharge of an ammonia concentration of 1.0 mg/L from the upgraded Facility would not have a reasonable potential to cause or contribute to an exceedance of the acute criterion (2.14 mg/L) for ammonia, but that it would have the potential to cause or contribute to slight exceedances of the chronic criterion (0.76 mg/L) in the immediate vicinity of the point of discharge. Modeling indicated that the elevated ammonia levels would only occupy a small portion of the channel cross-section at the point of discharge and rapidly decrease downstream and laterally from the point of discharge.

The maximum observed effluent ammonia concentration from the upgraded Facility was 0.52 mg/L, based on nine samples collected between February 2013 and April 2014. The maximum observed upstream receiving water ammonia concentration was 2.8 mg/L, based on 12 samples collected between March 2011 and April 2014.

Because ammonia levels in the upstream receiving water have been measured at concentrations greater than U.S. EPA's 2013 recommended water quality criteria for fresh waters and ammonia was detected in the effluent from the upgraded Facility, the Regional Water Board concludes that discharges from the Facility have a reasonable potential to cause or contribute to exceedances of the Basin Plan's applicable narrative water quality criterion for toxicity. In order to support the Exception Request, and consistent with Order No. R1-2010-0017, this Order includes effluent

DRAFT

limitations for ammonia for the protection of aquatic life. In lieu of the floating effluent limitations based on pH and temperature at the time of ammonia sampling established in Order No. R1-2010-0017, this Order establishes an average monthly effluent limitations (AMEL) of 1.9 mg/L (AMEL) and maximum daily effluent limitation (MDEL) of 4.9 mg/L for total ammonia, expressed as N. Calculations of these effluent limitations is included in section IV.C.4 of this Fact Sheet. Consistent with Order No. R1-2010-0017, this Order applies the effluent limitations for ammonia at Discharge Point 003.

b. Priority Pollutants

The SIP establishes procedures to implement water quality criteria from the NTR and CTR and for priority, toxic pollutant objectives established in the Basin Plan. The implementation procedures of the SIP include methods to determine reasonable potential (for pollutants to cause or contribute to excursions above state water quality standards) and to establish numeric effluent limitations, if necessary, for those pollutants showing reasonable potential.

Section 1.3 of the SIP requires the Regional Water Board to use all available, valid, relevant, and representative receiving water and effluent data and information to conduct an RPA. During the term of Order No. R1-2010-0017, priority pollutant sampling was conducted on March 12, 2013 (effluent only) and March 19, 2014 (effluent and upstream receiving water).

Hardness: The CTR and the NTR contain water quality criteria for seven metals that vary as a function of hardness; the lower the hardness, the more stringent the water quality criteria. The hardness-dependent metal criteria include cadmium, copper, chromium (III), lead, nickel, silver, and zinc. The upstream receiving water hardness ranged from 45 mg/L to 106 mg/L based on 11 samples collected between March 2011 and April 2014. For the RPA, the minimum observed upstream receiving water hardness of 45 mg/L was used to calculate the criteria.

To conduct the RPA, Regional Water Board staff identified the maximum effluent concentration (MEC) and maximum background (B) concentration for each priority, toxic pollutant from effluent and receiving water data provided by the Permittee, and compared this information to the most stringent applicable water quality criterion (C) for each pollutant with applicable water quality criteria from the NTR, CTR, and the Basin Plan. Section 1.3 of the SIP establishes three triggers for a finding of reasonable potential.

Trigger 1. If the MEC is greater than C, there is reasonable potential, and an effluent limitation is required.

Trigger 2. If B is greater than C, and the pollutant is detected in effluent (MEC > ND), there is reasonable potential, and an effluent limitation is required.

Trigger 3. After a review of other available and relevant information, a permit writer may decide that a WQBEL is required. Such additional information may include, but is not limited to: the facility type, the discharge type, solids loading analyses, lack of dilution, history of compliance problems, potential toxic impact of the discharge, fish tissue residue data, water quality and beneficial uses of the receiving water, CWA 303(d) listing for the pollutant, and the presence of endangered or threatened species or their critical habitat.

DRAFT

c. Reasonable Potential Determination

The RPA demonstrated reasonable potential for discharges of bis (2-ethylhexyl) phthalate and copper from the Facility to cause or contribute to exceedances of applicable water quality criteria. Reasonable potential could not be determined for all pollutants, as there are not applicable water quality criteria for all pollutants. The RPA determined that there is either no reasonable potential or there was insufficient information to conclude affirmative reasonable potential for 124 of the 126 priority pollutants.

Table F-6 summarizes the RPA for each pollutant that was reported in detectable concentrations in the effluent or the receiving water. The MECs, most stringent water quality objectives/water quality criteria (WQO/WQCs), and background concentrations (B) used in the RPA are presented, along with the RPA results (Yes or No and which trigger) for each toxic pollutant analyzed. No other pollutants with applicable, numeric water quality criteria from the NTR, CTR, and the Basin Plan were measured above detectable concentrations during the monitoring events conducted by the Permittee. Attachment F-1 to this Order summarizes the RPA for all 126 priority pollutants.

Table F-6. Summary of Reasonable Potential Analysis Results

CTR #	Pollutant	C or Most Stringent WQO/WQC (µg/L)	MEC or Minimum DL (µg/L)[1]	B or Minimum DL (µg/L)	RPA Results[2]
2	Arsenic	10	1.4	<0.3	No
6	Copper	4.7	5.9	4.8	Yes (Trigger 1)
8	Mercury	0.050	0.00209	0.00181	No
9	Nickel	39	3.9	2.5	No
13	Zinc	89	54	13	No
14	Cyanide	5.2	2.1	<2	No
26	Chloroform	No Criteria	0.25	<0.2	No
39	Toluene	150	0.39	<0.3	No
68	Bis (2-Ethylhexyl) Phthalate	1.8	7.4	<0.83	Yes (Trigger 1)
Not Applicable	Ammonia (as N)	2.0[3]	0.52	2.8	Yes (Trigger 1)
Not Applicable	Nitrate (as N)	10	3.4	0.31	No

Table Notes:

1. The Maximum Effluent Concentration (MEC) or maximum background concentration (B) is the actual detected concentration unless it is preceded by "<", in which case the value shown is the minimum detection level as the analytical result was reported as not detected (ND).
2. RPA Results:
   = Yes, if MEC > WQO/WQC, or B > WQO/WQC and MEC is detected.
   = No, if MEC and B or < WQO/WQC or all effluent data are undetected.
   = Undetermined (UD).
3. Ammonia criteria are determined on a sliding scale based upon temperature and pH. The criterion represented in this table is based upon chronic exposure and a temperature of 14.3°C and pH of 7.49.

4. WQBEL Calculations

Final WQBELs have been determined using the methods described in Section 1.4 of the SIP.

DRAFT

Step 1: To calculate the effluent limits, an effluent concentration allowance (ECA) is calculated for each pollutant found to have reasonable potential using the following equation, which takes into account dilution and background concentrations:

ECA = C + D (C – B),

Where:

C = the applicable water quality criterion (adjusted for effluent hardness and expressed as the total recoverable metal, if necessary)

D = dilution credit (here D= 0, as the discharge does not qualify for a dilution credit)

B = background concentration

Here, no credit for dilution is allowed, which results in the ECA being equal to the applicable criterion (ECA = C).

Step 2: For each ECA based on an aquatic life criterion/objective (ammonia and copper), the long term average discharge condition (LTA) is determined by multiplying the ECA by a factor (multiplier), which adjusts the ECA to account for effluent variability. The multiplier depends on the coefficient of variation (CV) of the data set and whether it is an acute or chronic criterion/objective. Table 1 of the SIP provides pre-calculated values for the multipliers based on the values of the CV. When the data set contains less than 10 sample results (as for the Facility), or when 80 percent or more of the data set is reported as non-detect (ND), the CV is set equal to 0.6. Derivation of the multipliers is presented in Section 1.4 of the SIP.

The SIP procedure assumes a 4 day averaging period for calculating the LTA. However, U.S. EPA recommends modifying the procedure for calculating permit limits for ammonia using a 30-day averaging period for the calculation of the LTA corresponding to the 30-day CCC. Therefore, while the LTAs corresponding to the acute and 4-day chronic criteria were calculated according to SIP procedures, the LTA corresponding to the 30-day CCC was calculated assuming a 30-day averaging period.

From Table 1 of the SIP, the ECA multipliers for calculating LTAs at the 99th percentile occurrence probability are 0.321 (acute multiplier) and 0.527 (chronic 4-day multiplier).Additionally, the chronic 30-day multiplier for ammonia is 0.780. The LTAs are determined as follows in Table F-7.

Table F-7. Determination of Long Term Averages

Pollutant	ECA			ECA Multiplier			LTA (mg/L)		
	Acute	Chronic 4-Day	Chronic 30-Day	Acute	Chronic 4-Day	Chronic 30-Day	Acute	Chronic 4-Day	Chronic 30-Day
Ammonia (as N)	13	5.1	2.0	0.321	0.527	0.780	4.3	2.7	1.6
Copper, Total Recoverable	6.6	4.7	--	0.321	0.527	--	2.1	2.5	--

Step 3: WQBELs, including an AMEL and MDEL, are calculated using the most limiting (lowest) LTA. The LTA is multiplied by a factor that accounts for averaging periods and exceedance frequencies of the effluent limitations, and for the AMEL, the effluent monitoring frequency. Here, the CV is set equal to 0.6, and the sampling frequency is set equal to 4 (n = 4) for the acute criterion and chronic 4-day criterion, and 30 (n = 30) for the chronic 30-day criterion. The 99th percentile occurrence probability was used to determine the MDEL multiplier and a 95th percentile occurrence probability was used to determine the

DRAFT

AMEL multiplier. From Table 2 of the SIP, the MDEL multiplier is 3.11, and the AMEL multiplier is 1.19. Final WQBELs for ammonia and copper are determined as follows.

Table F-8. Determination of Final WQBELs Based on Aquatic Life Criteria

Pollutant	LTA (mg/L)	MDEL Multiplier	AMEL Multiplier	MDEL (mg/L)	AMEL (mg/L)
Ammonia (as N)	1.6	3.11	1.19	4.9	1.9
Copper, Total Recoverable	2.1	3.11	1.55	6.6	3.3

Step 4: When the most stringent water quality criterion/objective is a human health criterion/objective (as for bis (2-ethylhexyl) phthalate), the AMEL is set equal to the ECA. From Table 2 of the SIP, when CV = 0.6 and n = 4, the MDEL multiplier at the 99th percentile occurrence probability equals 3.11, and the AMEL multiplier at the 95th percentile occurrence probability equals 1.55. The MDEL for protection of human health is calculated by multiplying the ECA by the ratio of the MDEL multiplier to the AMEL multiplier. Final WQBELs for bis (2-ethylhexyl) phthalate are determined as follows.

Table F-9. Determination of Final WQBELs Based on Human Health Criteria

Pollutant	ECA (µg/L)	MDEL/AMEL	MDEL (µg/L)	AMEL (µg/L)
Bis (2-Ethylhexyl) Phthalate	1.8	2.01	1.8	3.6

A summary of WQBELs established by this Order is given in the table below.

Table F-10. Summary of Water Quality-Based Effluent Limitations – Discharge Point 002

Parameter	Units	Effluent Limitations				
		Average Monthly	Average Weekly	Maximum Daily	Instantaneous Minimum	Instantaneous Maximum
pH	s.u.	--	--	--	6.5	8.5
Nitrogen, Total (as N)	mg/L	10	--	--	--	--
Total Coliform Bacteria	MPN/100 mL	--	23[1]	240	--	--

Table Notes:
1. The median value of total coliform bacteria shall not exceed a Most Probable Number (MPN) of 23 per 100 milliliters (mL), in a calendar week.

Table F-11. Summary of Water Quality-Based Effluent Limitations – Discharge Point 003

Parameter	Units	Effluent Limitations				
		Average Monthly	Average Weekly	Maximum Daily	Instantaneous Minimum	Instantaneous Maximum
pH	s.u.	--	--	--	6.5	8.5
Bis (2-Ethylhexyl) Phthalate	µg/L	1.8	--	3.6	--	--
Copper, Total Recoverable	µg/L	3.3	--	6.6	--	--
Ammonia Nitrogen, Total (as N)	mg/L	1.9	--	4.9	--	--
Nitrogen, Total (as N)	mg/L	1.6/6.0[1]	--	--	--	--

Parameter	Units	Effluent Limitations				
		Average Monthly	Average Weekly	Maximum Daily	Instantaneous Minimum	Instantaneous Maximum
Settleable Solids	ml/L	0.1	--	0.2	--	--
Discharge Rate	%	--	--	--	--	10[2]

Table Notes:

1. The effluent limitation of 1.6 mg/L applies only under critical conditions which occur when receiving water in Outlet Creek is either greater than 15°C or flowing at less than 2.4 cubic feet per second (cfs). At all other times, the total nitrogen effluent limitation for Discharge Point 003 shall be 6.0 mg/L.
2. During the period from October 1 through May 14, discharges of treated wastewater shall not exceed 10 percent (1:10) of the upstream receiving water flow. For purposes of this Order, the flow in Outlet Creek shall be measured at the concrete flow-control structure in the creek below the confluence of Bechtel and Broaddus Creeks.

5. Whole Effluent Toxicity (WET)

Effluent limitations for whole effluent toxicity protect the receiving water from the aggregate effect of a mixture of pollutants that may be present in effluent. There are two types of WET tests – acute and chronic. An acute toxicity test is conducted over a short time period and measures mortality. A chronic test is conducted over a longer period of time and may measure mortality, reproduction, and/or growth.

WET requirements are derived from the CWA and the Basin Plan. The Basin Plan establishes a narrative water quality objective for toxicity that states "*All waters shall be maintained free of toxic substances in concentrations that are toxic to, or that produce detrimental physiological responses in human, plant, or aquatic life*." Detrimental responses may include, but are not limited to, decreased growth rate, decreased reproductive success of resident or indicator species, and/or significant alterations in population, community ecology, or receiving water biota. For compliance with the Basin Plan's narrative toxicity objective, this Order requires the Permittee to conduct WET testing for acute and chronic toxicity, as specified in the MRP (Attachment E, section V).

a. Acute Aquatic Toxicity

Consistent with Order No. R1-2010-0017, this Order includes an effluent limitation for acute toxicity in accordance with the Basin Plan, which requires that the average survival of test organisms in undiluted effluent for any three consecutive 96-hour bioassay tests be at least 90 percent, with no single test having less than 70 percent survival.

The Order implements federal guidelines (Regions 9 and 10 Guidelines for Implementing Whole Effluent Toxicity Testing Programs) by requiring the Permittee to conduct acute toxicity tests on a fish species and on an invertebrate species to determine the most sensitive species. According to the U.S. EPA manual, *Methods for Estimating the Acute Toxicity of Effluents and Receiving Waters to Freshwater and Marine Organisms* (EPA/600/4-90/-27F), the acceptable vertebrate species for the acute toxicity test are the fathead minnow, *Pimephales promelas* and the rainbow trout, *Oncorhynchus mykiss*. The acceptable invertebrate species for the acute toxicity test are the water flea, *Ceriodaphnia dubia*, *Daphnia magna*, and *D. pulex*. This Order requires the Permittee to conduct a screening test using a vertebrate and invertebrate species. After the screening test is completed, monitoring can be reduced to the most sensitive species.

DRAFT

b. Chronic Aquatic Toxicity

The SIP requires the use of short-term chronic toxicity tests to determine compliance with the narrative toxicity objectives for aquatic life in the Basin Plan. The SIP requires that the Permittee demonstrate the presence or absence of chronic toxicity using tests on the fathead minnow, *Pimephales promelas*, the water flea, *Ceriodaphnia dubia*, and the freshwater alga, *Selenastrum capricornutum* (also named *Raphidocelis subcapitata*). Attachment E of this Order requires semi-annual chronic WET monitoring to demonstrate compliance with the narrative toxicity objective.

The Permittee conducted semiannual chronic toxicity testing using *P. promelas*, *C. dubia*, and *S. capricornutum*. The following table summarizes the chronic toxicity testing results from February 2013 through January 2015.

Table F-12. Summary of Chronic Toxicity Results

Date	*Pimephales promelas*		*Ceriodaphnia dubia*		*Selenastrum capricornutum*
	Survival (TUc)	Growth (TUc)	Survival (TUc)	Reproduction (TUc)	Growth (TUc)
February 19, 2013	1	1	1	1	1
January 17, 2014	1	1	1	1	1
April 15, 2014	1	1	1[1]	1	1
January 6, 2015	1	1	1	1	1

Table Notes:
1. The effluent did not exhibit chronic toxicity when compared to laboratory control water.

Numeric chronic toxicity effluent limitations have not been included in the Order for consistency with the SIP, which implements narrative toxicity objectives in Basin Plans and specifies use of a numeric trigger for accelerated monitoring and implementation of a Toxicity Reduction Evaluation (TRE) in the event that persistent toxicity is detected. The SIP contains implementation gaps regarding the appropriate form and implementation of chronic toxicity limits. This has resulted in the petitioning of a NPDES permit in the Los Angeles Region that contained numeric chronic toxicity effluent limitations. To address the petition, the State Water Board adopted WQO 2003-0012 directing its staff to revise the toxicity control provisions in the SIP. The State Water Board states the following in WQO 2003-012, "*In reviewing this petition and receiving comments from numerous interested persons on the propriety of including numeric effluent limitations for chronic toxicity in NPDES permits for publicly-owned treatment works, that discharge to inland waters, we have determined that this issue should be considered in a regulatory setting, in order to allow for full public discussion and deliberation. We intend to modify the SIP to specifically address the issue. We anticipate that review will occur within the next year. We therefore decline to make a determination here regarding the propriety of the final numeric effluent limitations for chronic toxicity contained in these permits*." The process to revise the SIP is underway. Proposed changes include clarifying the appropriate form of effluent toxicity limits in NPDES permits and general expansion and standardization of toxicity control implementation related to the NPDES permitting process. Since the toxicity control provisions in the SIP are under revision, it is infeasible to develop numeric effluent limitations for chronic toxicity at this time. The SIP revision may require a permit modification to incorporate new statewide toxicity criteria established by the upcoming SIP revision.

DRAFT

This Order includes a reopener that allows the Regional Water Board to reopen the permit and include a numeric chronic toxicity limitation, a revised acute toxicity limitation, and/or a limitation for a specific toxicant identified in the TRE.

To ensure compliance with the narrative effluent limitation and the Basin Plan's narrative toxicity objective, the Permittee is required to conduct chronic WET testing twice per discharge season at Discharge Point 003, as specified in the MRP (Attachment E, section V). Furthermore, Special Provision IV.C.2.a of this Order requires the Permittee to investigate the causes of, and identify and implement corrective actions to reduce or eliminate effluent toxicity. If the discharge demonstrates toxicity exceeding the numeric toxicity monitoring trigger, the Permittee is required to initiate a TRE in accordance with an approved TRE work plan. The numeric toxicity monitoring trigger is not an effluent limitation; it is the toxicity threshold at which the Permittee is required to perform accelerated chronic toxicity monitoring, as well as the threshold to initiate a TRE if a pattern of effluent toxicity has been demonstrated.

Test of Significant Toxicity (TST)

Order No. R1-2010-0017 established a numeric chronic toxicity trigger of 1.0 TUc = 100/NOEC, using a five-concentration hypothesis test. In 2010, U.S. EPA endorsed the peer-reviewed *Test of Significant Toxicity (TST) two-concentration hypothesis testing approach in National Pollutant Discharge Elimination System Test of Significant Toxicity Implementation Document* (EPA 833-R-10-003, 2010) as an improved hypothesis-testing tool to evaluate data from U.S. EPA's toxicity test methods. The TST hypothesis testing approach more reliably identifies toxicity—in relation to the chronic (0.25 or more) mean response of regulatory management concern—than the NOEC hypothesis-testing approach. The TST hypothesis testing approach more reliably identifies toxicity—in relation to the acute (0.20 or more) mean responses of regulatory management concern—than the No Observed Effect Concentration (NOEC) approach previously used to establish effluent limitations for acute toxicity.

This Order does not include effluent limitations for acute toxicity based on the TST approach. However, this Order does require the Permittee to monitor and report results in a manner that will allow the Regional Water Board to conduct an RPA in accordance with the TST approach at the time of the next permit renewal.

The State Water Board is developing a toxicity amendment to the Water Quality Control Plan for Enclosed Bays and Estuaries of California that will standardize the regulation of aquatic toxicity for all non-oceanic surface waters. U.S. EPA's TST approach is an essential component of this draft toxicity amendment as it forms the basis for utilizing numeric water quality objectives and acts as the primary means of determining compliance with the proposed effluent limitations.

In a letter dated February 12, 2014, the State Water Board submitted an ATP request to USEPA Region 9 for the statewide use of a two-concentration toxicity test design when using the Test of Significant Toxicity (TST) approach. This two-concentration test design is composed of a single effluent concentration and a control concentration. USEPA approved the ATP request on March 17th, 2014. In June 2014, the approval was challenged in court on procedural grounds under the Administrative Procedures Act by the Southern California Alliance of Publicly Owned Treatment Works (SCAP) and the Central Valley Clean Water Association (CVCWA). The U.S. EPA withdrew the approval and notified State Water Board in a memo dated February 11th, 2015.

It is important to note that U.S. EPA's rescission of its approval of the ATP is not based on the substantive TST statistical analysis or the scientific validity of a two-

concentration test design. The withdrawal letter also states that currently there is a proposed rulemaking to change the language in the ATP regulations at Code of Federal Regulations, title 40, section 136.

The benefits of requiring the TST in new or amended permits include improving the statistical power of the toxicity test, and simplifying the analysis as compared totraditional hypothesis statistical approaches or point estimates. The calculations are straightforward and provide a clear pass/fail result. With the withdrawal of the two-concentration test design approval, an NPDES permit can still require the TST for statistical analyses. Toxicity test shall be run using a multi-concentration test design in accordance with Code of Federal Regulations, title 40, section 136.3, and the TST shall be utilized with the biological responses from the permitted IWC and the control (effluent concentration of zero). However, even with only two of the five concentration biological responses being used, cost savings in the form of time and effort are still realized for the statistical analysis and data interpretation carried out by the Permittee, lab, and permit manager. This Order requires application of TST for statistical analysis of whole effluent toxicity data.

Test of Significant Toxicity Design

The TST's null hypothesis for chronic toxicity is:

H_0: Mean response (In-stream Waste Concentration (IWC) in % effluent) ≤ 0.75 mean response (control)

Results are analyzed using the TST approach and an acceptable level of chronic toxicity is demonstrated by rejecting the null hypothesis and reporting "Pass" or "P".

The chronic IWC (in % effluent) for Discharge Point 003 is 100%. The chronic toxicity trigger for Discharge Point 003 is expressed as a null hypothesis (H_0) and regulatory management decision (b value) of 0.75 for the chronic toxicity methods in the MRP. The null hypothesis for this discharge is:

H_0: Mean response (100% effluent) ≤ 0.75 mean response (control)

Results shall be analyzed using the TST hypothesis testing approach in the MRP. Compliance with this chronic toxicity limitation is demonstrated by rejecting the null hypothesis and reporting "Pass" or "P".

When the chronic toxicity test results in a "fail" or "f", the Permittee must initiate accelerated monitoring as specified in the MRP (Attachment E, section V). After accelerated monitoring, if conditions of chronic toxicity are found to persist, the Permittee will be required to conduct a TRE, as described by the MRP.

Notification requirements for chronic WET testing include a 72-hour verbal notification requirement and a 14 day written report requirement, if test results indicate toxicity. The 14 day written notification is established in the U.S. EPA WET Guidance documents cited in the MRP. The 72-hour verbal notification requirement is being added to provide the Regional Water Board with knowledge of the toxicity in advance of the written report. The 72-hour requirement is intended to give the Permittee sufficient time to make a telephone call to Regional Water Board staff and accounts for non-working days (e.g., weekends). Verbal notification of WET test exceedances may be left by voice mail if the Regional Water Board staff person is not immediately available by telephone.

DRAFT

This Order includes a requirement for the Permittee to conduct a screening test using at least one vertebrate, invertebrate, and plant species. After the screening test is completed, monitoring can be reduced to the most sensitive species.

Chronic WET limitations will be established if future monitoring results demonstrate that discharges from the Facility are causing or contributing to chronic toxicity in the receiving water.

D. Final Effluent Limitation Considerations

1. Anti-Backsliding Requirements

Sections 402(o) and 303(d)(4) of the CWA and federal regulations at 40 C.F.R. section 122.44(l) prohibit backsliding in NPDES permits. These anti-backsliding provisions require effluent limitations in a reissued permit to be as stringent as those in the previous permit, with some exceptions where limitations may be relaxed. All effluent limitations in this Order are at least as stringent as the effluent limitations in Order No. R1-2010-0017 except for effluent limitations for cyanide.

Order No. R1-2010-0017 included effluent limitations for cyanide based on the CTR aquatic life criteria. As shown in Table F-6 of this Fact Sheet, effluent data demonstrate that the discharge no longer demonstrates reasonable potential to cause or contribute to an exceedance of the water quality objectives for cyanide. The updated effluent data for cyanide constitutes new information, which permits the removal of effluent limitations consistent with CWA section 402(o)(2)(B). Therefore, the Order does not retain the effluent limitations for cyanide.

2. Antidegradation Policies

This Order is consistent with applicable federal and state antidegradation policies, as it does not authorize the discharge of increased concentrations of pollutants or increased volumes of treated wastewater beyond that which was permitted to discharge in accordance with Order No. R1-2010-0017.

The Exception Request demonstrated compliance with the requirements of the state and federal antidegradation policies, as outlined below:

a. Existing water quality objectives and beneficial uses of Outlet Creek and the Eel River will be protected and/or not adversely affected;

b. The upgraded Facility is necessary to support the economic and social needs of the Willits, Meadow Brook, and Brooktrails communities and is considered to be a benefit to the people of the state;

c. The upgraded Facility provides a best practicable treatment method for water quality protection, and reducing and managing effluent nutrient loads into Outlet Creek;

d. The upgraded Facility will improve existing water quality conditions in Outlet Creek; and

e. The upgraded Facility discharging effluent at a 10 percent dilution ratio provides the same or better water quality protection as the previous permitted condition (i.e., one percent dilution ratio).

3. Stringency of Requirements for Individual Pollutants

This Order contains both technology-based effluent limitations and WQBELs for individual pollutants. The technology-based effluent limitations consist of restrictions on BOD_5 and TSS. Restrictions on these pollutants are discussed in section IV.B of this Fact Sheet. This Order's technology-based pollutant restrictions implement the minimum, applicable federal

DRAFT

technology-based requirements. In addition, this Order contains effluent limitations for ammonia, bis (2-ethylhexyl) phthalate, copper, pH, settleable solids, total coliform bacteria, and total nitrogen that are more stringent than the minimum, federal technology-based requirements but are necessary to meet water quality standards. These requirements are discussed in section IV.C.3 of the Fact Sheet.

WQBELs have been derived to implement water quality objectives that protect beneficial uses. Both the beneficial uses and the water quality objectives have been approved pursuant to federal law and are the applicable federal water quality standards. Most beneficial uses and water quality objectives contained in the Basin Plan were approved under state law and submitted to and approved by U.S. EPA prior to May 30, 2000. Any water quality objectives and beneficial uses submitted to U.S. EPA prior to May 30, 2000, but not approved by U.S. EPA before that date, are nonetheless "*applicable water quality standards for purposes of the CWA*" pursuant to 40 C.F.R. section 131.21(c)(1). Collectively, this Order's restrictions on individual pollutants are no more stringent than required to implement the requirements of the CWA.

The Regional Water Board has considered the factors in Water Code section 13263, including the provisions of Water Code section 13241, in establishing these requirements.

Tables F-13 and F-14 summarize all final effluent limitations included in the Order and the basis for their inclusion.

Table F-13. Summary of Final Effluent Limitations – Discharge Point 002

Parameter	Units	Effluent Limitations					Basis[1]
		Average Monthly	Average Weekly	Maximum Daily	Instantaneous Minimum	Instantaneous Maximum	
Biochemical Oxygen Demand 5-day @ 20°C (BOD_5)	mg/L	10	15	--	--	--	TT
	lbs/day[2]	334	500	--	--	--	
	% Survival	85	--	--	--	--	CFR
Total Suspended Solids (TSS)	mg/L	10	15	--	--	--	TT
	lbs/day[2]	334	500	--	--	--	
	% Survival	85	--	--	--	--	CFR
pH	s.u.	--	--	--	6.5	8.5	BP
Nitrogen, Total (as N)	mg/L	10	--	--	--	--	TT
Total Coliform Bacteria	MPN/ 100 mL	--	23[3]	240	--	--	Title 22

Table Notes:
1. Definitions of acronyms in Table F-13:
   TT Based on the treatment capability of the Facility.
   CFR 40 C.F.R. part 133
   BP Basin Plan
   Title 22 Based on DDW Reclamation Criteria, CCR, Division 4, Chapter 3 (title 22).
2. Mass-based effluent limitations are based on the permitted average monthly flow of 4.0 mgd.
3. The median value of total coliform bacteria shall not exceed a Most Probable Number (MPN) of 23 per 100 milliliters (mL), in a calendar week.

DRAFT

Table F-14. Summary of Final Effluent Limitations – Discharge Point 003

Parameter	Units	Effluent Limitations					Basis[1]
		Average Monthly	Average Weekly	Maximum Daily	Instantaneous Minimum	Instantaneous Maximum	
pH	s.u.	--	--	--	6.5	8.5	BP
Bis (2-Ethylhexyl) Phthalate	µg/L	1.8	--	3.6	--	--	CTR
Copper, Total Recoverable	µg/L	3.3	--	6.6	--	--	CTR
Ammonia Nitrogen, Total (as N)	mg/L	1.9	--	4.9	--	--	NAWQC
Nitrogen, Total (as N)	mg/L	1.6/6.0[2]	--	--	--	--	BP/TT
Settleable Solids	ml/L	0.1	--	0.2	--	--	BP
Discharge Rate	%	--	--	--	--	10[3]	BP
Acute Toxicity	% Survival	--	--	70[4]/90[5]	--	--	BP

Table Notes:

1. Definitions of acronyms in Table F-14:
   BP Basin Plan
   CTR California Toxics Rule
   NAWQC National Ambient Water Quality Criteria
   TT Based on the treatment capability of the Facility.
2. The effluent limitation of 1.6 mg/L applies only under critical conditions which occur when receiving water in Outlet Creek is either greater than 15°C or flowing at less than 2.4 cubic feet per second (cfs). At all other times, the total nitrogen effluent limitation for Discharge Point 003 shall be 6.0 mg/L.
3. During the period from October 1 through May 14, discharges of treated wastewater shall not exceed 10 percent (1:10) of the upstream receiving water flow. For purposes of this Order, the flow in Outlet Creek shall be measured at the concrete flow-control structure in the creek below the confluence of Bechtel and Broaddus Creeks.
4. Minimum for any one bioassay.
5. Median for any three or more consecutive bioassays.

E. Interim Effluent Limitations – Not Applicable

This Order does not establish interim effluent limitations or schedules for compliance with final limitations.

F. Land Discharge Specifications – Not Applicable

This Order does not authorize discharges of waste to land except for use for fire suppression as provided in Cal. Code of Regs title 22, sections 60307(a) and 60307(b). Discharges of waste to land related to recycled water are found in section IV.C.

G. Recycling Specifications and Requirements

This Order authorizes the Permittee to reuse treated municipal wastewater that complies with Water Recycling Specifications and Requirements contained in section IV.C of the Order for uses that have been addressed in an approved title 22 Engineering Report.

The Permittee has a recycled water system to irrigate adjacent pasture land consistent with agronomic demand. Irrigation occurs during the spring, summer, and fall. All of the water recycling specifications are based on the technical capabilities of the wastewater treatment system and levels required by the Basin Plan and title 22.

DRAFT

1. Scope and Authority

Section 13263 of the Water Code requires the Regional Water Board to prescribe requirements for proposed discharges, existing discharges, or material change in an existing discharge based upon the conditions of the disposal area or receiving waters upon or into which the discharge is made or proposed. The prescribed requirements shall implement any relevant water quality control plans that have been adopted, and shall take into consideration the beneficial uses to be protected, the water quality objectives reasonably required for that purpose, other waste discharges, the need to prevent nuisance, and the provisions of Water Code section 13241. In prescribing requirements, the Regional Water Board is not obligated to authorize the full waste assimilation capacities of the receiving water.

Water Code section 13241 requires the Regional Water Board to establish water quality objectives in water quality control plans as in its judgment will ensure the reasonable protection of beneficial uses and prevention of nuisance, recognizing that it may be possible for the quality of water to be changed to some degree without unreasonably affecting beneficial uses. The Basin Plan establishes water quality objectives specific to the North Coast Region for the protection of past, present, and probable future beneficial uses of water. Factors required for consideration during development of applicable water quality objectives, such as the characteristics of the hydrographic unit under consideration, economic considerations, and other factors required in accordance with section 13241 were considered during the Basin Planning and adoption process.

Here, the Regional Water Board considered all of these factors when developing the waste discharge requirements for the recycled water discharge. The discharge of treated wastewater from the enhancement wetland fluctuates from surface water to reclamation at varying times of the year. Therefore, limitations for BOD_5 and TSS were derived based upon the treatment capability of the Facility in order to implement water quality objectives that protect beneficial uses of both surface and groundwater. Both beneficial uses and the water quality objectives have been approved pursuant to state law, and then submitted to and approved by U.S. EPA. In addition, discharge prohibitions were included to prohibit the reclamation use of untreated or partially treated waste, in order to prevent nuisance.

The Regional Water Board considered the factors set forth in Water Code section 13241, including the consideration of past, present, and probable future beneficial uses of the receiving water, which the Regional Water Board anticipates to be the same as set forth in the Basin Plan. The Regional Water Board considered the environmental characteristics, including water quality, of the Outlet Creek Hydrologic Subarea of the Eel River Hydrologic unit, the coordinated control of all factors which affect water quality in the area, and the need to develop and use recycled water, which this Order supports. The Permittee did not submit any evidence regarding whether the waste discharge requirements for reclamation discharges would interfere with the development of needed housing within the region or the costs of compliance, particularly anything to show that the costs of compliance with the Order would be unmanageable.

Recycling monitoring requirements were retained for ammonia, nitrate, nitrite, organic nitrogen, and total nitrogen and added for salts due to the need to assess nitrogen and salt application rates for recycled water. The monitoring and reporting program allows for a potential reduction of these monitoring requirements if monitoring demonstrates no reasonable potential.

DRAFT

2. **Applicable Beneficial Uses and Water Quality Criteria and Objectives**

   a. **Beneficial Uses.** Beneficial use designations for groundwater established in the Basin Plan include MUN, AGR, IND, and PRO.

   b. **Basin Plan Water Quality Objectives.** The Basin Plan contains narrative objectives for tastes and odors, bacteria, radioactivity, and chemical constituents (including those chemicals that adversely affect agricultural water supply) that apply to groundwater.

3. **Determining the Need for Requirements for Water Recycling**

   a. Section IV.C of this Order contains Water Recycling Specifications and Requirements to ensure that recycled water is used in a manner that is protective of groundwater and surface water quality. These specifications are established to conform to requirements contained in the title 22, division 4, chapter 3 of the CCR for the recycled water use of disinfected secondary-23 recycled water. The Permittee is required to comply with applicable state and local requirements regarding the production and use of recycled wastewater, including requirements of Water Code sections 13500 – 13577 (Water Reclamation) and DDW regulations at title 22, sections 60301 – 60357 of the CCR (Water Recycling Criteria).

   The Recycling Specifications and Requirements are established in this Order to conform to requirements contained in the CCR, title 22, division 4, chapter 3 for the recycled water use of disinfected secondary-23 effluent. Specific water recycling requirements are enumerated in Order section IV.C, Recycling Specifications and Requirements. The requirement to comply with title 22 requirements is retained from Order No. R1-2010-0017.

   b. **BOD_5 and TSS.** This Order establishes discharge limitations for BOD_5 and TSS based on technology-based effluent limitations that consist of a monthly average of 10 mg/L and a weekly average of 15 mg/L. These levels are technically achievable based on the capability of the enhanced secondary treatment system. These limits are included in the Order to ensure that discharges to the reclamation system receive proper treatment.

   c. **pH.** Consistent with Order No. R1-2010-0017, this Order includes instantaneous minimum and maximum effluent limitations for pH of 6.5 and 8.5, respectively. These pH limitations are included in the Order to ensure that pH levels are appropriate for protection of groundwater when discharging to reclamation sites.

   d. **Total Nitrogen.** Nitrate is known to cause adverse health effects in humans. For waters designated as domestic or municipal supply, the Basin Plan (Chapter 3) adopts the MCLs, established by DDW for the protection of public water supplies at CCR title 22, section 64431 (Inorganic Chemicals) and 64444 (Organic Chemicals), as applicable water quality criteria. The MCL for nitrate (10 mg/L N) is therefore applicable as a water quality criterion. In order to support the Exception Request and consistent with Order No. R1-2010-0017, this Order includes effluent limitations for discharges into the enhancement wetland (Discharge Point 002) for total nitrogen at 10 mg/L which will serve for the protection of human health for any unintended leaching of nitrogen through the clay liner of the wetland. Therefore, an individual limitation for nitrate has not been established.

DRAFT

Table F-15. Summary of Recycling Discharge Specifications – Discharge Point 002

Parameter	Units	Discharge Specifications			Basis[1]
		Average Monthly	Average Weekly	Maximum Daily	
Biochemical Oxygen Demand 5-day @ 20°C (BOD_5)	mg/L	10	15	--	PO and TT
Total Suspended Solids (TSS)	mg/L	10	15	--	PO and TT
pH	s.u.	6.5 – 8.5			PO and TT
Nitrogen, Total (as N)	mg/L	10	--	--	PO and TT

Table Notes:
1. Definitions of acronyms in Table F-15:
   PO Previous Order
   TT Based on the treatment capability of the Facility.

e. **Disinfection and Filtration Specifications.** CCR, title 22, section 60304 requires that recycled water used as irrigation water for pasture for animals producing milk for human consumption and any nonedible vegetation where access is controlled so that the irrigated area cannot be used as if were part of a park, playground, or school yard meet effluent limitations associated with the disinfected secondary-23 recycled water standard. The water recycling criteria for disinfection contained in section 60301.225 defines disinfected secondary-23 recycled water as, "*recycled water that has been oxidized and disinfected so that the median concentration of total coliform bacteria in the disinfected effluent does not exceed a most probable number (MPN) of 23 per 100 milliliters utilizing the bacteriological results of the last seven days for which analyses have been completed, and the number of total coliform bacteria does not exceed an MPN of 240 per 100 milliliters in more than one sample in any 30 day period*."

f. **Discharge Rate.** Discharge specifications have been established for recycled water in the Order based upon the maintenance of separation between treated effluent and groundwater. Should recycled water be applied at rates which exceed the agronomic demand of the grazing area being irrigated, pollutants may reach groundwater and have the potential to impact beneficial uses thereof. The discharge rate for recycled water is limited to agronomic rates for the protection of groundwater beneficial uses.

4. Satisfaction of Antidegradation Policy

The permitted discharge is consistent with the antidegradation provisions of State Water Board Resolution No. 68-16. This Order does not provide for an increase in the volume and mass of pollutants discharged. The discharge will not have significant impacts on the beneficial uses of groundwater because the Order does not authorize the discharge of treated wastewater to groundwater. The Permittee is limited to application of recycled water at agronomic rates.

H. Other Requirements

The Order contains additional specifications that apply to the Facility regardless of the disposal method (surface water discharge or reclamation), including:

1. **Disinfection Process Requirements for the UV Disinfection System.** The Order contains monitoring requirements for the UV disinfection system in section IV.D.1. These requirements are needed to determine compliance with requirements for recycled

DRAFT

wastewater systems, established at CCR title 22, division 4, chapter 3 and to ensure that the disinfection process achieves effective pathogen reduction.

UV system operation requirements are necessary to ensure that adequate UV dosage is applied to the wastewater to inactivate pathogens (e.g., viruses, bacteria) in the wastewater. UV dosage is dependent on several factors such as UV transmittance, UV power setting, and wastewater flow through the UV system. Minimum dosage requirements are based on recommendations by DDW and guidelines established by the National Water Research Institute (NWRI) and American Water Works Association Research (AWWARF) "Ultraviolet Disinfection Guidelines for Drinking Water and Water Reuse" first published in December 2000 revised as a Third Edition dated August 2012. Furthermore, a Memorandum dated November 1, 2004 issued by DDW to Regional Water Board Executive Officers recommended that provisions be included in permits for water recycling treatment plants employing UV disinfection requiring permittees to establish fixed cleaning frequency of quartz sleeves as well as include provisions that specify minimum delivered UV dose that must be maintained (as recommended by the NWRI/AWWARF UV Disinfection Guidelines). Minimum UV dosage requirements specified in section IV.D.1 of the Order ensures that adequate disinfection of wastewater will be achieved.

V. RATIONALE FOR RECEIVING WATER LIMITATIONS

A. Surface Water

CWA section 303(a-c) requires states to adopt water quality standards, including criteria where they are necessary to protect beneficial uses. The Regional Water Board adopted water quality criteria as water quality objectives in the Basin Plan. The Basin Plan states that "[t]*he numerical and narrative water quality objectives define the least stringent standards that the Regional* [Water] *Board will apply to regional waters in order to protect the beneficial uses*." The Basin Plan includes numeric and narrative water quality objectives for various beneficial uses and water bodies. This Order contains Receiving Surface Water Limitations based on the Basin Plan numerical and narrative water quality objectives for biostimulatory substances, bacteria, chemical constituents, color, dissolved oxygen, floating material, oil and grease, pH, pesticides, radioactivity, sediment, settleable material, suspended material, tastes and odors, temperature, toxicity, and turbidity.

B. Groundwater

1. The beneficial uses of the underlying groundwater are municipal and domestic supply, industrial service supply, industrial process supply, agricultural supply, and freshwater replenishment to surface waters.

2. Groundwater limitations are required to protect the beneficial uses of the underlying groundwater.

3. Discharges from the Facility shall not cause exceedance of applicable water quality objectives or create adverse impacts to beneficial uses of groundwater.

4. The Basin Plan requires that waters designated for use as MUN shall not contain concentrations of chemical constituents in excess of the limits specified in CCR, title 22, , division 4, chapter 15, article 4.1, section 64435, and article 5.5, section 64444, and listed in Table 3-2 of the Basin Plan.

DRAFT

VI. RATIONALE FOR PROVISIONS

A. Standard Provisions

1. Federal Standard Provisions

Standard Provisions, which apply to all NPDES permits in accordance with 40 C.F.R. section 122.41, and additional conditions applicable to specified categories of permits in accordance with 40 C.F.R. section 122.42, are provided in Attachment D to the Order. The Permittee must comply with all standard provisions and with those additional conditions that are applicable under 40 C.F.R. section 122.42. The rationale for the special conditions contained in the Order is provided in section VI.B, below.

Sections 122.41(a)(1) and (b) through (n) of 40 C.F.R. establish conditions that apply to all state-issued NPDES permits. These conditions must be incorporated into the permits either expressly or by reference. If incorporated by reference, a specific citation to the regulations must be included in the Order. Section 123.25(a)(12) allows the state to omit or modify conditions to impose more stringent requirements. In accordance with 40 C.F.R. section 123.25, this Order omits federal conditions that address enforcement authority specified in 40 C.F.R. sections 122.41(j)(5) and (k)(2) because the enforcement authority under the Water Code is more stringent. In lieu of these conditions, this Order incorporates by reference Water Code section 13387(e).

2. Regional Water Board Standard Provisions

In addition to the Federal Standard Provisions (Attachment D), the Permittee shall comply with the Regional Water Board Standard Provisions provided in Standard Provisions VI.A.2 of the Order.

a. Order Provision VI.A.2.a identifies the state's enforcement authority under the Water Code, which is more stringent than the enforcement authority specified in the federal regulations (e.g., 40 C.F.R. sections 122.41(j)(5) and (k)(2)).

b. Order Provision VI.A.2.b requires the Permittee to notify Regional Water Board staff, orally and in writing, in the event that the Permittee does not comply or will be unable to comply with any Order requirement. This provision requires the Permittee to make direct contact with a Regional Water Board staff person.

B. Special Provisions

1. Reopener Provisions

a. Standard Revisions (Special Provision VI.C.1.a). Conditions that necessitate a major modification of a permit are described in 40 C.F.R. section 122.62, which include the following:

i. When standards or regulations on which the permit was based have been changed by promulgation of amended standards or regulations or by judicial decision. Therefore, if revisions of applicable water quality standards are promulgated or approved pursuant to Section 303 of the CWA or amendments thereto, the Regional Water Board will revise and modify this Order in accordance with such revised standards.

ii. When new information that was not available at the time of permit issuance would have justified different permit conditions at the time of issuance.

b. Reasonable Potential (Special Provision VI.C.1.b). This provision allows the Regional Water Board to modify, or revoke and reissue, this Order if present or future

DRAFT

investigations demonstrate that the Permittee governed by this Permit is causing or contributing to excursions above any applicable priority pollutant criterion or objective, or adversely impacting water quality and/or the beneficial uses of receiving waters.

c. **Whole Effluent Toxicity (Special Provision VI.C.1.c).** This Order requires the Permittee to investigate the causes of, and identify corrective actions to reduce or eliminate effluent toxicity through a TRE. This Order may be reopened to include a numeric chronic toxicity limitation, revised acute toxicity limitation, and/or a limitation for a specific toxicant identified in the TRE.

d. **303(d)-Listed Pollutants (Special Provision VI.C.1.d).** This provision allows the Regional Water Board to reopen this Order to modify existing effluent limitations or add effluent limitations for pollutants that are the subject of any future TMDL action.

e. **Water Effects Ratios (WERs) and Metal Translators (Special Provision VI.C.1.e).** This provision allows the Regional Water Board to reopen this Order if future studies undertaken by the Permittee provide new information and justification for applying a water effects ratio or metal translator to a water quality objective for one or more priority pollutants.

f. **Nutrients (Special Provision VI.C.1.f).** This Order contains effluent limitations for ammonia and total nitrogen and effluent and receiving water monitoring for nutrients (ammonia, nitrate, nitrite, organic nitrogen, total nitrogen, and phosphorus). This provision allows the Regional Water Board to reopen this Order if future monitoring data indicates the need for new or revised effluent limitations for any of these parameters.

g. **Salt and Nutrient Management Plans (SNMPs) (Special Provision VI.C.1.g).** This provision allows the Regional Water Board to reopen this Order if it adopts a regional or subregional SNMP that is applicable to the Permittee.

h. **Title 22 Engineering Report (Special Provision VI.C.1.h).** This provision allows the Regional Water Board to reopen this Order to adequately implement title 22, if future modifications to the Permittee's title 22 engineering report occur.

2. **Special Studies and Additional Monitoring Requirements**

a. **Toxicity Reduction Requirements (Special Provision VI.C.2.a).** In addition to routine chronic toxicity monitoring, this Order requires the Permittee to maintain and update their TRE Work Plan, in accordance with appropriate U.S. EPA guidance to ensure that the Permittee has a plan to immediately move forward with the initial tiers of a TRE in the event effluent toxicity is encountered in the future. The TRE is initiated by evidence of a pattern of toxicity demonstrated through the additional effluent monitoring provided as a result of an accelerated monitoring program.

b. **Source Control and Pretreatment Studies (Special Provision VI.C.2.b).** As discussed further in section VI.B.5.b of this Fact Sheet, this Order does not require the Permittee to develop a pretreatment program that conforms to federal regulations. However, in order to prevent interference with the POTW or pass through of pollutants to the receiving water, this Order requires the Permittee to conduct a local limits study and review and update, if necessary, their sewer use ordinances.

c. **Recycled Water Irrigation Operations and Maintenance Plan.** This Order requires the Permittee to submit an Irrigation Operations and Maintenance Plan to ensure that the use of recycled water occurs at an appropriate hydraulic and nutrient agronomic rates and that management while employing practices are incorporated to ensure

DRAFT

irrigation efficiency and necessary to minimize the potential for surface water runoff or percolation of nutrients, salts or other constituents to groundwater.

3. **Best Management Practices and Pollution Prevention**

   a. **Pollutant Minimization Program (Special Provision VI.C.3.a).** This provision is included in this Order pursuant to section 2.4.5 of the SIP. The Regional Water Board includes standard provisions in all NPDES permits requiring development of a Pollutant Minimization Program when there is evidence that a toxic pollutant is present in the effluent at a concentration greater than an applicable effluent limitation.

4. **Construction, Operation, and Maintenance Specifications**

   a. **Operation and Maintenance (Special Provisions VI.C.4.a and b).** 40 C.F.R. section 122.41(e) requires proper operation and maintenance of permitted wastewater systems and related facilities to achieve compliance with permit conditions. An up-to-date operation and maintenance manual, as required by Provision VI.C.4.c of this Order, is an integral part of a well-operated and maintained facility.

   b. **Septage Handling Requirements (Special Provision VI.C.4.c).** The Permittee currently accepts and treats septage at the Facility. Domestic septage is defined as the liquid or solid material removed from a septic tank, cesspool, portable toilet, type III marine sanitation device, recreational vehicle's sanitation tank, or similar storage or treatment works that receives only domestic septage. Septage is characterized by high organic strength, high solids content, high odor potential, high vector attraction potential, and high potential to pollute groundwater. Septage may be 6 to 80 times more concentrated than typical municipal wastewater and may also contain heavy metals and illicitly dumped hazardous materials. Septage has the potential to upset treatment plant operations or process performance or both if the plant is not designed to handle septage. Some of the impacts of septage addition to WWTFs include: potential toxic shock to biological processes; increased odor emissions; increased volume of grit, scum, screenings, and sludge; increased organic loading to biological processes; and increased housekeeping requirements. This Order requires the Permittee to manage septage accepted at the Facility in a manner that ensures that pollutants associated with domestic septage do not pass through or interfere with the operation or performance of the Facility.

5. **Special Provisions for Municipal Facilities (POTWs Only)**

   a. **Wastewater Collection Systems (Special Provision VI.C.5.a)**

      i. **Statewide General WDRs for Sanitary Sewer Systems.** On May 2, 2006, the State Water Board adopted General Waste Discharge Requirements for Sanitary Sewer Systems, Water Quality Order No. 2006-0003-DWQ (General Order). The General Order requires public agencies that own or operate sanitary sewer systems with greater than 1 mile of pipes or sewer lines to enroll for coverage under the General Order. The General Order requires agencies to develop sanitary sewer management plans (SSMPs) and report all SSOs, among other requirements and prohibitions. The Permittee has enrolled under the General Order as required.

      On February 20, 2008, the State Water Board adopted Order No. WQ 2008-0002-EXEC Adopting Amended Monitoring and Reporting Requirements for Statewide General Waste Discharge Requirements for Statewide General Waste Discharge Requirements for Sanitary Sewer Systems, to ensure adequate and timely notifications are made to the Regional Water Board and appropriate local, state, and federal authorities in case of sewage spills. On August 6, 2013, the State Water

DRAFT

Board adopted Order No. WQ 2013-0058-EXEC Amending Monitoring and Reporting Program for Statewide General Waste Discharge Requirements for Sanitary Sewer Systems. Order No. WQ 2013-0058-EXEC addressing compliance and enforceability of the Monitoring and Reporting Program and superseding the amendments in Order No. WQ-2008-0002-EXEC. Notification and reporting of SSOs is conducted in accordance with the requirements of Order Nos. 2006-0003-DWQ and WQ 2013-0058-EXEC, and any revisions thereto for operation of its wastewater collection system.

b. Source Control and Pretreatment Provisions (Special Provision VI.C.5.b). Pursuant to Special Provision VI.C.5.b.i, the Permittee shall implement the necessary legal authorities to monitor and enforce source control standards, restrict discharges of toxic materials to the collection system, and inspect facilities connected to the system.

40 C.F.R. section 403.8(a) requires POTWs with a total design flow greater than 5 mgd and receiving pollutants which pass through or interfere with the operation of the POTW to establish a POTW Pretreatment Program. The Regional Water Board may also require that a POTW with a design flow of 5 mgd or less develop a POTW Pretreatment Program if the nature or volume of the industrial influent, treatment process upsets, violations of POTW effluent limitations, contamination of municipal sludge, or other circumstances warrant in order to prevent interference or pass through. The Permittee reports that there are no known industrial wastes subject to regulation under the NPDES Pretreatment Program being discharged to the Facility and the permitted flow of the Facility is less than 5 mgd; therefore, the Order does not require the Permittee to develop a pretreatment program that conforms to federal regulations. However, in order to prevent interference with the POTW or pass through of pollutants to the receiving water, the Order requires the Permittee to conduct an industrial waste survey to identify all non-domestic facilities in the service area that might discharge pollutants that could pass through or interfere with the operation or performance of the Facility and to monitor the influent for priority pollutants. If the results of the industrial waste survey or influent monitoring indicate that a pretreatment program is necessary, pursuant to 40 C.F.R. section 403.8(3), the Regional Water Board may reopen this permit to require the Permittee to develop a pretreatment program. Additionally, section VI.C.2.b of this Order requires the Permittee to conduct a local limits study and review and update, if necessary, their sewer use ordinances.

Water Code section 13263.3(d)(1) allows the Regional Water Board to require a discharger to complete and implement a pollution prevention plan if pollution prevention is necessary to achieve a water quality objective, to include, pursuant to Water Code section 13263.3(d)(3), an analysis of the methods that could be used to prevent the discharge of the pollutants into the POTW. These methods can include application of local limits to industrial or commercial dischargers, pollution prevention techniques, public education and outreach, or other innovative and alternative approaches to reduce discharges of pollutants to the POTW. The analysis also shall identify sources, or potential sources, not within the ability or authority of the POTW to control, such as pollutants in the potable water supply, airborne pollutants, pharmaceuticals, or pesticides, and estimate the magnitude of those sources, to the extent feasible. This Order includes requirements for the Permittee to implement a source identification and reduction program.

A key component of an effective source control program is the identification and location of possible industrial users within the POTW's wastewater collection system. This information is typically obtained by the POTW through industrial waste surveys.

The following types of resources can be consulted in compiling a master list of industrial users:

i. Water and sewer billing records

ii. Applications for sewer service

iii. Local telephone directories

iv. Chamber of Commerce and local business directories

v. Business license records

vi. POTW and wastewater collection personnel and field observations

vii. Business associations

viii. The internet

ix. Industrial and non-residential sewer use permit records

In addition, the Regional Water Board recognizes that some form of source control is prudent to ensure the efficient operation of the Facility, the safety of Facility staff, and to ensure that pollutants do not pass through the treatment Facility to impair the beneficial uses of the receiving water. The proposed Order includes prohibitions for the discharge of pollutants that may interfere, pass through, or be incompatible with treatment operations, interfere with the use of disposal of sludge, or pose a health hazard to personnel.

c. Sludge Disposal and Handling Requirements (Special Provision VI.C.5.c). The disposal or reuse of wastewater treatment screenings, sludges, or other solids removed from the liquid waste stream is regulated by 40 C.F.R. parts 257, 258, 501, and 503, and the State Water Board promulgated provisions of title 27 of the CCR. Dewatered biosolids are composted and then land applied on an 18-acre agricultural parcel owned by the Permittee and located immediately west of the Facility. See Fact Sheet section II.A for more detail.

d. Biosolids Management (Special Provision VI.C.5.d). This provision requires the Permittee to comply with the state's regulations relating to the discharge of biosolids to the land. The discharge of biosolids through land application is not regulated under this Order. The Permittee is required to obtain coverage under the State Water Board Order No. 2004-0012-DWQ, General Waste Discharge Requirements for the Discharge of Biosolids to Land as a Soil Amendment in Agricultural, Silvicultural, Horticultural, and Land Reclamation Activities (General Order). Coverage under the General Order, as opposed to coverage under this NPDES permit or individual WDRs, implements a consistent statewide approach to regulating this waste discharge.

e. Operator Certification (Special Provision VI.C.5.e). This provision requires the Facility to be operated by supervisors and operators who are certified as required by title 23, section 3680 of the CCR.

f. Adequate Capacity (Special Provision VI.C.5.f). The goal of this provision is to ensure appropriate and timely planning by the Permittee to ensure adequate capacity for the protection of public health and water quality.

6. Other Special Provisions

a. Storm Water (Special Provision VI.C.6.a). This provision requires the Permittee, if applicable, to obtain coverage under the State Water Board's Water Quality Order No. 2014-0057-DWQ, NPDES General Permit No. CAS000001, General Permit for Storm

Water Discharges Associated with Industrial Activities (or subsequent renewed versions of the NPDES General Permit CAS000001). Currently, the Facility is exempted from these requirements because all storm water is captured and treated and/or disposed of within the Facility's NPDES permitted process wastewater.

7. Compliance Schedules – Not Applicable

This Order does not establish interim effluent limitations or schedules of compliance for final numeric effluent limitations.

VII. RATIONALE FOR MONITORING AND REPORTING REQUIREMENTS

Section 122.48 of 40 C.F.R. requires that all NPDES permits specify requirements for recording and reporting monitoring results. Water Code section 13383 authorizes the Regional Water Board to require technical and monitoring reports. The MRP, Attachment E, establishes monitoring and reporting requirements that implement federal and state requirements. The following provides the rationale for the monitoring and reporting requirements contained in the MRP for this Facility.

A. Influent Monitoring

1. Influent monitoring requirements at Monitoring Location INF-001 for BOD_5 and TSS are retained from Order No. R1-2010-0017 and are necessary to determine compliance with the Order's 85 percent removal requirement for these parameters.

2. The Permittee has the ability to divert flows to the equalization basins during periods of high influent flows. When flows subside, the Permittee can return water from the equalization basins back to the headworks. During periods of diversion, the Permittee monitors influent flows at the headworks (Monitoring Location INF-001) and at the secondary splitter box which diverts flows to the equalization basins (Monitoring Location INF-002). When flows are returned from the equalization basins to the headworks, the return flows are measured at prior to entering the headworks (Monitoring Location INF-003). During periods when flows are returned from the equalization basins to the headworks, flow monitoring at Monitoring Location INF-001 includes the return flows from the equalization basins. In order to provide accurate influent flow data, flows measured at INF-003 will be automatically deducted from flows at INF-001. Influent monitoring requirements for flow at Monitoring Locations INF-001, INF-002, and INF-003 have been established in this Order to characterize influent flow to the Facility, influent flow diverted to the equalization basins, and influent flow returned from the equalization basins to the headworks.

B. Effluent Monitoring

1. Effluent monitoring requirements are necessary to determine compliance with prohibitions and/or effluent limitations established by the Order. Monitoring at Monitoring Locations EFF-002 and EFF-003 is necessary to demonstrate compliance with effluent limitations and demonstrate whether or not the discharge poses reasonable potential for a pollutant to exceed any numeric or narrative water quality objectives.

a. Effluent monitoring frequencies and sample types for flow, BOD_5, TSS, pH, total coliform bacteria, ammonia, nitrate, nitrite, organic nitrogen, and total nitrogen have been retained from Order No. R1-2010-0017.

b. Effluent monitoring requirements for temperature have been established at Monitoring Location EFF-002, concurrent with monthly monitoring for ammonia, to properly adjust the pH- and temperature-dependent criteria for ammonia.

DRAFT

c. Effluent monitoring frequencies and sample types for flow, settleable solids, pH, temperature, ammonia, nitrate, nitrite, organic nitrogen, total nitrogen, hardness, and phosphorus have been retained from Order No. R1-2010-0017.

d. Effluent monitoring data at Monitoring Location EFF-003 indicates that the discharge does not exhibit reasonable potential to cause or contribute to an exceedance of water quality objectives for cyanide. Therefore, this Order discontinues effluent monitoring requirements for cyanide from Order No. R1-2010-0017.

e. Monitoring data collected over the term of Order No. R1-2010-0017 demonstrated that the discharge exhibits reasonable potential to cause or contribute to an exceedance of water quality criteria for bis (2-ethylhexyl) phthalate and copper, and this Order establishes new effluent limitations for bis (2-ethylhexyl) phthalate and copper at Discharge Point 003. Therefore, this Order establishes monthly monitoring requirements for bis (2-ethylhexyl) phthalate and copper at Monitoring Location EFF-003 to determine compliance with the applicable effluent limitations.

f. Consistent with Order No. R1-2010-0017, effluent monitoring requirements for the CTR priority pollutants is required annually at Monitoring Location EFF-003 to generate adequate data to perform an RPA.

C. Whole Effluent Toxicity Testing Requirements

Whole effluent toxicity (WET) monitoring requirements are retained from Order No. R1-2010-0017 and are included in this Order to protect the receiving water quality from the aggregate effect of a mixture of pollutants in the effluent. Acute toxicity testing measures mortality in 100 percent effluent over a short test period and chronic toxicity testing is conducted over a longer time period and may measure mortality, reproduction, and/or growth.

D. Recycling Monitoring Requirements

This Order requires that the Permittee comply with applicable state and local requirements regarding the production and use of recycled wastewater. Recycling monitoring requirements for flow, pH, ammonia, nitrate, nitrite, organic nitrogen, and total nitrogen have been retained from Order No. R1-2010-0017. Monitoring and reporting requirements for recycled water production and use have also been retained from Order No. R1-2010-0017.

Section 13523.1(b)(4) of the Water Code requires quarterly recycled water reporting. Section X.D.4.a.i of the MRP requires quarterly recycled water reporting.

The Order includes new recycled water monitoring requirements including:

1. Monthly monitoring for total dissolved solids, chloride, boron, and sodium has been added to determine whether any of these constituents are present in the effluent at concentrations that may exceed water quality objectives for these constituents to address concerns of the statewide Recycled Water Policy. Total dissolved solids is a direct measure of salinity, which can affect underlying groundwater quality as it relates to drinking water and agricultural supply beneficial uses. Secondary MCLs for taste and odor in drinking water have been established by DDW for total dissolved solids (500 mg/L), chloride (250 mg/L) and sodium (60 mg/L). Agricultural water quality thresholds for total dissolved solids (450 mg/L) and boron (0.7 mg/L) have been established by the Food and Agriculture Organization of the United Nations. The MRP allows for reduction of monitoring frequency or elimination of the monitoring requirement if monitoring data collected over time demonstrates that any constituent is present in concentrations that could not cause an exceedance of water quality objectives.

DRAFT

2. Visual monitoring of recycled water use sites. The purpose of visual monitoring is to identify any indicators, such as surface runoff, ponding, broken sprinkler heads, or sprinklers operating when the ground is saturated, that could result in a violation of permit conditions and to implement any needed corrective measures.

E. Receiving Water Monitoring

1. Surface Water

a. Receiving water monitoring is required to demonstrate compliance with the Receiving Water Limitations.

b. Monitoring requirements at Monitoring Location RSW-001 for flow, visual observations, dissolved oxygen, hardness, turbidity, ammonia, nitrate, nitrite, organic nitrogen, total nitrogen, phosphorus, and CTR priority pollutants have been retained from Order No. R1-2010-0017.

c. Monitoring requirements at Monitoring Locations RSW-003 and RSW-004 for visual observations, dissolved oxygen, electrical conductivity, and turbidity have been retained from Order No. R1-2010-0017.

d. Order No. R1-2010-0017 required monthly receiving water monitoring for pH and temperature at Monitoring Locations RSW-001, RSW-003, and RSW-004. This Order increases the monitoring frequency for pH and temperature to weekly in order to provide sufficient information to adjust pH- and temperature-dependent criteria for ammonia and better characterize the impacts of the discharge on the receiving water.

2. Groundwater – Not Applicable

This Order does not require groundwater monitoring at this time.

F. Other Monitoring Requirements

1. **Disinfection Process Monitoring for UV Disinfection System.** UV disinfection system monitoring requirements are included to assess compliance of the UV disinfection system with title 22 and guidelines established by the National Water Research Institute (NWRI) and American Water Works Association Research Foundation (AWWARF) Ultraviolet Disinfection Guidelines for Drinking Water and Water Reuse (3rd or subsequent editions).

2. **Septage Station Monitoring.** The Permittee currently accepts and treats septage at the Facility. This Order establishes monitoring requirements to characterize discharges of septage into the treatment system and to ensure that pollutants associated with domestic septage do not pass through or interfere with the operation or performance of the Facility.

G. Reporting Requirements

The reporting frequency has been changed from monthly to quarterly for routine influent, effluent, and recycled water monitoring. The Permittee is still required to perform monitoring each month, but will submit reports quarterly of each quarter. The reduced reporting frequency is intended to improve reporting efficiency.

VIII. PUBLIC PARTICIPATION

The California Regional Water Quality Control Board, North Coast Region (Regional Water Board) has considered the issuance of waste discharge requirements (WDRs) that will serve as a National Pollutant Discharge Elimination System (NPDES) permit for City of Willits, Wastewater Treatment Facility. As a step in the WDR adoption process, the Regional Water Board staff has developed tentative WDRs and has encouraged public participation in the WDR adoption process.

DRAFT

A. Notification of Interested Parties

The Regional Water Board notified the Permittee and interested agencies and persons of its intent to prescribe waste discharge requirements for the discharge and provided an opportunity to submit written comments and recommendations. Notification was provided through the following posting on the Regional Water Board's Internet site at: http://www.waterboards.ca.gov/northcoast/public_notices/public_hearings/npdes_permits_and_wdrs.shtml and through publication in the **Santa Rosa Press Democrat on July 18, 2015**.

B. Written Comments

Interested persons were invited to submit written comments concerning these tentative WDRs as provided through the notification process. Comments must be submitted to the Executive Office electronically via e-mail to NorthCoast@waterboards.ca.gov or on disk (CD or DVD) in Portable Document Format (PDF) file in lieu of paper-sourced documents. The guidelines for electronic submittal of documents can be found on the Regional Water Board website at http://www.waterboards.ca.gov/northcoast.

To be fully responded to by staff and considered by the Regional Water Board, the written comments were due at the Regional Water Board office by 5:00 p.m. on **August 17, 2015**.

C. Public Hearing

The Regional Water Board held a public hearing on the draft WDRs during its regular Board meeting on the following date and time and at the following location:

Date:	October 8, 2015
Time:	8:30 a.m. or as announced in the Regional Water Board's agenda
Location:	Regional Water Board Hearing Room 5550 Skylane Boulevard, Suite A Santa Rosa, CA 95403

Interested persons were invited to attend. At the public hearing, the Regional Water Board heard testimony pertinent to the discharge, WDRs, and permit. For accuracy of the record, important testimony was requested in writing.

Please be aware that dates and venues may change. Our Web address is http://www.waterboards.ca.gov/northcoast where you can access the current agenda for changes in dates and locations.

D. Waste Discharge Requirements Petitions

Any aggrieved person may petition the State Water Board to review the decision of the Regional Water Board regarding the final WDRs. The petition must be received by the State Water Board at the following address within 30 calendar days of the Regional Water Board's action:

State Water Resources Control Board
Office of Chief Counsel
P.O. Box 100, 1001 I Street
Sacramento, CA 95812-0100

For instructions on how to file a petition for review see http://www.waterboards.ca.gov/public_notices/petitions/water_quality/wqpetition_instr.shtml

E. Information and Copying

The Report of Waste Discharge (ROWD), related documents, tentative effluent limitations and special provisions, comments received, and other information are on file and may be inspected at the address identified in section VIII.C, above at any time between 8:30 a.m. and 4:45 p.m.,

DRAFT

Monday through Friday. Copying of documents may be arranged through the Regional Water Board by calling (707) 576-2220.

F. Register of Interested Persons

Any person interested in being placed on the mailing list for information regarding the WDRs and NPDES permit should contact the Regional Water Board, reference this Facility, and provide a name, address, and phone number.

G. Additional Information

Requests for additional information or questions regarding this order should be directed to Justin McSmith at Justin.Smith@Waterboards.Ca.Gov or (707) 576-2082.

DRAFT

Attachment F-1 – City of Willits Wastewater Treatment Facility RPA Summary

Constituent	Units	Qualifier	MEC	Qualifier	B	C	CMC	CCC	Water & Org	Org. Only	MCL	Reasonable Potential
Antimony	µg/L	<	1	<	1	6	--	--	14	4300	6	No
Arsenic	µg/L	=	1.4	<	0.3	10	340	150	--	--	10	No
Beryllium	µg/L	<	0.3	<	0.3	4	--	--	--	--	4	No
Cadmium	µg/L	<	0.4	<	0.4	1.9	3.0	1.9	--	--	5	No
Chromium (III)	µg/L	<	1	<	1	155	1297	155	--	--	--	No
Chromium (VI)	µg/L	<	5	<	5	11	16	11	--	--	50	No
Copper	µg/L	=	5.9	=	4.8	4.7	6.6	4.7	1300			Yes
Lead	µg/L	<	0.3	<	0.3	2.0	52	2.0				No
Mercury	µg/L	=	0.00209	=	0.00181	0.050	--	--	0.05	0.051	2	No
Nickel	µg/L	=	3.9	=	2.5	39	347	39	610	4600	100	No
Selenium	µg/L	<	0.9	<	0.9	5.0		5.0	--	--	50	No
Silver	µg/L	<	2	<	2	2.2	2.2	--	--	--	--	No
Thallium	µg/L	<	0.3	<	0.3	1.7	--	--	1.7	6.3	2	No
Zinc	µg/L	=	54	=	13	89	89	89	--	--	--	No
Cyanide	µg/L	=	2.1	<	2	5.2	22	5.2	700	220000	150	No
Asbestos	MFL	<	0.4	<	0.4	7	--	--	7	--	7	No
2,3,7,8 TCDD	µg/L	<	3.78E-06	<	3.48E-06	1.3E-08	--	--	1.3E-08	1.4E-08	3.0E-05	No
Acrolein	µg/L	<	0.62	<	0.62	320	--	--	320	780	--	No
Acrylonitrile	µg/L	<	0.3	<	0.3	0.059	--	--	0.059	0.66	--	No
Benzene	µg/L	<	0.3	<	0.3	1	--	--	1.2	71	1	No
Bromoform	µg/L	<	0.2	<	0.2	4.3	--	--	4.3	360	--	No
Carbon Tetrachloride	µg/L	<	0.3	<	0.3	0.25	--	--	0.25	4.4	0.5	No
Chlorobenzene	µg/L	<	0.2	<	0.2	70	--	--	680	21000	70	No
Chlorodibromomethane	µg/L	<	0.3	<	0.3	0.401	--	--	0.401	34	--	No
Chloroethane	µg/L	<	0.4	<	0.4	No Criteria	--	--	--	--	--	Ud
2-Chloroethylvinyl ether	µg/L	<	0.6	<	0.6	No Criteria	--	--	--	--	--	Ud
Chloroform	µg/L	=	0.25	<	0.2	No Criteria	--	--	--	--	--	Ud
Dichlorobromomethane	µg/L	<	0.2	<	0.2	0.56	--	--	0.56	46	--	No
1,1-Dichloroethane	µg/L	<	0.2	<	0.2	5	--	--	--	--	5	No
1,2-Dichloroethane	µg/L	<	0.2	<	0.2	0.38	--	--	0.38	99	0.5	No
1,1-Dichloroethylene	µg/L	<	0.3	<	0.3	0.057	--	--	0.057	3.2	6	No
1,2-Dichloropropane	µg/L	<	0.2	<	0.2	0.52	--	--	0.52	39	5	No
1,3-Dichloropropylene	µg/L	<	0.2	<	0.2	0.5	--	--	10	1700	0.5	No
Ethylbenzene	µg/L	<	0.3	<	0.3	300	--	--	3100	29000	300	No
Methyl Bromide	µg/L	<	0.4	<	0.4	48	--	--	48	4000	--	No
Methyl Chloride	µg/L	<	0.4	<	0.4	No Criteria	--	--	--	--	--	Ud

DRAFT

Constituent	Units	Qualifier	MEC	Qualifier	B	C	CMC	CCC	Water & Org	Org. Only	MCL	Reasonable Potential
Methylene Chloride	µg/L	<	0.5	<	0.5	4.7	--	--	4.7	16000	5	No
1,1,2,2-Tetrachloroethane	µg/L	<	0.3	<	0.3	0.17	--	--	0.17	11	1	No
Tetrachloroethylene	µg/L	<	0.4	<	0.4	0.8	--	--	0.8	8085	5	No
Toluene	µg/L	=	0.39	<	0.3	150	--	--	6800	200000	150	No
1,2-Trans-Dichloroethylene	µg/L	<	0.3	<	0.3	10	--	--	700	140000	10	No
1,1,1-Trichloroethane	µg/L	<	0.3	<	0.3	200	--	--	--	--	200	No
1,1,2-Trichloroethane	µg/L	<	0.3	<	0.3	0.6	--	--	0.6	42	5	No
Trichloroethylene	µg/L	<	0.2	<	0.2	2.7	--	--	2.7	81	5	No
Vinyl Chloride	µg/L	<	0.4	<	0.4	0.5	--	--	2	525	0.5	No
2-Chlorophenol	µg/L	<	0.66	<	0.66	120	--	--	120	400	--	No
2,4-Dichlorophenol	µg/L	<	0.66	<	0.66	93	--	--	93	790	--	No
2,4-Dimethylphenol	µg/L	<	1.2	<	1.2	540	--	--	540	2300	--	No
2-Methyl- 4,6-Dinitrophenol	µg/L	<	0.75	<	0.75	13.4	--	--	13.4	765	--	No
2,4-Dinitrophenol	µg/L	<	1.3	<	1.3	70	--	--	70	14000	--	No
2-Nitrophenol	µg/L	<	0.9	<	0.9	No Criteria	--	--	--	--	--	Ud
4-Nitrophenol	µg/L	<	0.99	<	0.99	No Criteria	--	--	--	--	--	Ud
3-Methyl 4-Chlorophenol	µg/L	<	0.58	<	0.58	No Criteria	--	--	--	--	--	Ud
Pentachlorophenol	µg/L	<	1.4	<	1.4	0.28	6.1	4.7	0.28	8.2	1	No
Phenol	µg/L	<	0.46	<	0.46	21000	--	--	21000	4600000	--	No
2,4,6-Trichlorophenol	µg/L	<	0.74	<	0.74	2.1	--	--	2.1	6.5	--	No
Acenaphthene	µg/L	<	0.57	<	0.57	1200	--	--	1200	2700	--	No
Acenaphthylene	µg/L	<	0.48	<	0.48	No Criteria	--	--	--	--	--	Ud
Anthracene	µg/L	<	0.39	<	0.39	9600	--	--	9600	110000	--	No
Benzidine	µg/L	<	3.4	<	3.4	0.00012	--	--	0.00012	0.00054	--	No
Benzo(a)Anthracene	µg/L	<	0.39	<	0.39	0.0044	--	--	0.0044	0.049	--	No
Benzo(a)Pyrene	µg/L	<	0.5	<	0.5	0.0044	--	--	0.0044	0.049	0.2	No
Benzo(b)Fluoranthene	µg/L	<	0.64	<	0.64	0.0044	--	--	0.0044	0.049	--	No
Benzo(ghi)Perylene	µg/L	<	0.93	<	0.93	No Criteria	--	--	--	--	--	Ud
Benzo(k)Fluoranthene	µg/L	<	0.34	<	0.34	0.0044	--	--	0.0044	0.049	--	No
Bis(2-Chloroethoxy)Methane	µg/L	<	0.81	<	0.81	No Criteria	--	--	--	--	--	Ud
Bis(2-Chloroethyl)Ether	µg/L	<	0.14	<	0.14	0.031	--	--	0.031	1.4	--	No
Bis(2-Chloroisopropyl)Ether	µg/L	<	0.41	<	0.41	1400	--	--	1400	170000	--	No
Bis(2-Ethylhexyl)Phthalate	µg/L	=	7.4	<	0.83	1.8	--	--	1.8	5.9	4	Yes
4-Bromophenyl Phenyl Ether	µg/L	<	0.43	<	0.43	No Criteria	--	--	--	--	--	Ud
Butylbenzyl Phthalate	µg/L	<	0.64	<	0.64	3000	--	--	3000	5200	--	No
2-Chloronaphthalene	µg/L	<	0.57	<	0.57	1700	--	--	1700	4300	--	No
4-Chlorophenyl Phenyl Ether	µg/L	<	0.93	<	0.93	No Criteria	--	--	--	--	--	Ud

DRAFT

Constituent	Units	Qualifier	MEC	Qualifier	B	C	CMC	CCC	Water & Org	Org. Only	MCL	Reasonable Potential
Chrysene	µg/L	<	0.76	<	0.76	0.0044	--	--	0.0044	0.049	--	No
Dibenzo(a,h)Anthracene	µg/L	<	0.83	<	0.83	0.0044	--	--	0.0044	0.049	--	No
1,2-Dichlorobenzene	µg/L	<	0.2	<	0.2	600	--	--	2700	17000	600	No
1,3-Dichlorobenzene	µg/L	<	0.3	<	0.3	400	--	--	400	2600	--	No
1,4-Dichlorobenzene	µg/L	<	0.2	<	0.2	5	--	--	400	2600	5	No
3,3 Dichlorobenzidine	µg/L	<	2	<	2	0.04	--	--	0.04	0.077	--	No
Diethyl Phthalate	µg/L	<	0.86	<	0.86	23000	--	--	23000	120000	--	No
Dimethyl Phthalate	µg/L	<	0.68	<	0.68	313000	--	--	313000	2900000	--	No
Di-n-Butyl Phthalate	µg/L	<	0.91	<	0.91	2700	--	--	2700	12000	--	No
2,4-Dinitrotoluene	µg/L	<	0.68	<	0.68	0.11	--	--	0.11	9.1	--	No
2,6-Dinitrotoluene	µg/L	<	0.54	<	0.54	No Criteria	--	--	--	--	--	Ud
Di-n-Octyl Phthalate	µg/L	<	0.65	<	0.65	No Criteria	--	--	--	--	--	Ud
1,2-Diphenylhydrazine	µg/L	<	0.33	<	0.33	0.04	--	--	0.04	0.54	--	No
Fluoranthene	µg/L	<	0.76	<	0.76	300	--	--	300	370	--	No
Fluorene	µg/L	<	0.81	<	0.81	1300	--	--	1300	14000	--	No
Hexachlorobenzene	µg/L	<	0.89	<	0.89	0.00075	--	--	0.00075	0.00077	1	No
Hexachlorobutadiene	µg/L	<	0.84	<	0.84	0.44	--	--	0.44	50	--	No
Hexachlorocyclopentadiene	µg/L	<	0.45	<	0.45	50	--	--	240	17000	50	No
Hexachloroethane	µg/L	<	0.58	<	0.58	1.9	--	--	1.9	8.9	--	No
Indeno(1,2,3-cd)Pyrene	µg/L	<	0.63	<	0.63	0.0044	--	--	0.0044	0.049	--	No
Isophorone	µg/L	<	0.81	<	0.81	8.4	--	--	8.4	600	--	No
Naphthalene	µg/L	<	0.66	<	0.66	No Criteria	--	--	--	--	--	Ud
Nitrobenzene	µg/L	<	0.74	<	0.74	17	--	--	17	1900	--	No
N-Nitrosodimethylamine	µg/L	<	1.1	<	1.1	0.00069	--	--	0.00069	8.1	--	No
N-Nitrosodi-n-Propylamine	µg/L	<	0.85	<	0.85	0.005	--	--	0.005	1.4	--	No
N-Nitrosodiphenylamine	µg/L	<	0.9	<	0.9	5	--	--	5	16	--	No
Phenanthrene	µg/L	<	0.65	<	0.65	No Criteria	--	--	--	--	--	Ud
Pyrene	µg/L	<	0.45	<	0.45	960	--	--	960	11000	--	No
1,2,4-Trichlorobenzene	µg/L	<	0.59	<	0.59	5	--	--	--	--	5	No
Aldrin	µg/L	<	0.002	<	0.002	0.00013	3	--	0.00013	0.00014	--	No
alpha-BHC	µg/L	<	0.004	<	0.004	0.0039	--	--	0.0039	0.013	--	No
beta-BHC	µg/L	<	0.002	<	0.002	0.014	--	--	0.014	0.046	--	No
gamma-BHC	µg/L	<	0.004	<	0.004	0.019	0.95	--	0.019	0.063	0.2	No
delta-BHC	µg/L	<	0.002	<	0.002	No Criteria	--	--	--	--	--	Ud
Chlordane	µg/L	<	0.04	<	0.04	0.00057	2.4	0.0043	0.00057	0.00059	0.1	No
4,4'-DDT	µg/L	<	0.003	<	0.003	0.00059	1.1	0.001	0.00059	0.00059	--	No
4,4'-DDE	µg/L	<	0.004	<	0.004	0.00059	--	--	0.00059	0.00059	--	No

DRAFT

Constituent	Units	Qualifier	MEC	Qualifier	B	C	CMC	CCC	Water & Org	Org. Only	MCL	Reasonable Potential
4,4'-DDD	µg/L	<	0.02	<	0.02	0.00083	--	--	0.00083	0.00084	--	No
Dieldrin	µg/L	<	0.005	<	0.005	0.00014	0.24	0.056	0.00014	0.00014	--	No
alpha-Endosulfan	µg/L	<	0.004	<	0.004	0.056	0.22	0.056	110	240	--	No
beta-Endolsulfan	µg/L	<	0.002	<	0.002	0.056	0.22	0.056	110	240	--	No
Endosulfan Sulfate	µg/L	<	0.02	<	0.02	110	--	--	110	240	--	No
Endrin	µg/L	<	0.002	<	0.002	0.036	0.086	0.036	0.76	0.81	2	No
Endrin Aldehyde	µg/L	<	0.002	<	0.002	0.76	--	--	0.76	0.81	--	No
Heptachlor	µg/L	<	0.003	<	0.003	0.00021	0.52	0.0038	0.00021	0.00021	0.01	No
Heptachlor Epoxide	µg/L	<	0.009	<	0.009	0.0001	0.52	0.0038	0.0001	0.00011	0.01	No
PCBs sum	µg/L	<	0.04	<	0.04	0.00017	--	0.014	0.00017	0.00017	0.5	No
Toxaphene	µg/L	<	0.2	<	0.2	0.0002	0.73	0.0002	0.00073	0.00075	3	No

DRAFT

ATTACHMENT G 1 – FINAL AMMONIA AVERAGE MONTHLY EFFLUENT LIMITATIONS

Ammonia (mg N/L)											
Receiving Water pH	Receiving Water Temperature, °C										
	0	14	15	16	18	20	22	24	26	28	30
6.5	6.7	6.7	6.5	6.1	5.3	4.7	4.1	3.6	3.2	2.8	2.5
6.6	6.6	6.6	6.4	6.0	5.2	4.6	4.1	3.6	3.1	2.8	2.4
6.7	6.4	6.4	6.2	5.9	5.1	4.5	4.0	3.5	3.1	2.7	2.4
6.8	6.3	6.3	6.1	5.7	5.0	4.4	3.9	3.4	3.0	2.6	2.3
6.9	6.1	6.1	5.9	5.6	4.9	4.3	3.8	3.3	2.9	2.6	2.3
7.0	5.9	5.9	5.7	5.4	4.7	4.2	3.6	3.2	2.8	2.5	2.2
7.1	5.7	5.7	5.5	5.2	4.5	4.0	3.5	3.1	2.7	2.4	2.1
7.2	5.4	5.4	5.2	4.9	4.3	3.8	3.3	2.9	2.6	2.3	2.0
7.3	5.1	5.1	4.9	4.6	4.1	3.6	3.1	2.8	2.4	2.1	1.9
7.4	4.7	4.7	4.6	4.3	3.8	3.3	2.9	2.6	2.3	2.0	1.7
7.5	4.4	4.4	4.2	4.0	3.5	3.1	2.7	2.4	2.1	1.8	1.6
7.6	4.0	4.0	3.9	3.6	3.2	2.8	2.5	2.2	1.9	1.7	1.5
7.7	3.6	3.6	3.5	3.3	2.9	2.5	2.2	1.9	1.7	1.5	1.3
7.8	3.2	3.2	3.1	2.9	2.5	2.2	2.0	1.7	1.5	1.3	1.2
7.9	2.8	2.8	2.7	2.5	2.2	2.0	1.7	1.5	1.3	1.2	1.0
8.0	2.4	2.4	2.4	2.2	1.9	1.7	1.5	1.3	1.2	1.0	0.90
8.1	2.1	2.1	2.0	1.9	1.7	1.5	1.3	1.1	1.0	0.88	0.77
8.2	1.8	1.8	1.7	1.6	1.4	1.3	1.1	0.97	0.86	0.75	0.66
8.3	1.5	1.5	1.5	1.4	1.2	1.1	0.94	0.83	0.73	0.64	0.56
8.4	1.3	1.3	1.3	1.2	1.0	0.91	0.80	0.70	0.62	0.54	0.48
8.5	1.1	1.1	1.1	0.99	0.87	0.76	0.67	0.59	0.52	0.46	0.40
8.6	0.92	0.92	0.89	0.84	0.73	0.65	0.57	0.50	0.44	0.39	0.34
8.7	0.78	0.78	0.75	0.71	0.62	0.55	0.48	0.42	0.37	0.33	0.29
8.8	0.66	0.66	0.64	0.60	0.53	0.46	0.41	0.36	0.32	0.28	0.24
8.9	0.56	0.56	0.55	0.51	0.45	0.40	0.35	0.31	0.27	0.24	0.21
9.0	0.49	0.49	0.47	0.44	0.39	0.34	0.30	0.26	0.23	0.20	0.18

ATTACHMENT G-2 – FINAL AMMONIA MAXIMUM DAILY EFFLUENT LIMITATIONS

Receiving	Ammonia mg/L N

DRAFT

Water pH	
6.5	33
6.6	31
6.7	30
6.8	28
6.9	26
7.0	24
7.1	22
7.2	20
7.3	18
7.4	15
7.5	13
7.6	11
7.7	9.6
7.8	8.1
7.9	6.8
8.0	5.6
8.1	4.6
8.2	3.8
8.3	3.1
8.4	2.6
8.5	2.1
8.6	1.8
8.7	1.5
8.8	1.2
8.9	1.0
9.0	0.88

DRAFT