ORDER NO. R1-2013-0001
NPDES NO. CA0022764
WDID NO. 1B83099OSON

WASTE DISCHARGE REQUIREMENTS AND MASTER RECLAMATION PERMIT

FOR THE

CITY OF SANTA ROSA SUBREGIONAL WATER RECLAMATION SYSTEM SONOMA COUNTY

The following Permittee is subject to waste discharge requirements as set forth in this Order:

Table 1. Permittee Information

Permittee	City of Santa Rosa
Name of Facility	Santa Rosa Subregional Water Reclamation System
Facility Address	4300 Llano Road
	Santa Rosa, CA 95407
	Sonoma County
Type of Facility	Publicly Owned Treatment Works (POTW)
Facility Design Flow (Existing)	21.34 million gallons per day (mgd) (average dry weather design flow) 64 mgd (peak weekly wet weather design flow) 47.3 mgd (peak monthly wet weather design flow)

Table 2a. Discharge Location

Discharge Point	Effluent Description	Discharge Point Latitude	Discharge Point Longitude	Receiving Water
006A (Meadow Lane Pond D)	Disinfected tertiary treated municipal wastewater	38° 22′ 17″ N	122° 46′ 31″ W	Laguna de Santa Rosa
006B (Meadow Lane Pond D)	Disinfected tertiary treated municipal wastewater	38° 22′ 17″ N	122° 46′ 31″ W	Laguna de Santa Rosa

Table 2a. Discharge Location

Discharge Point	Effluent Description	Discharge Point Latitude	Discharge Point Longitude	Receiving Water
012A (Delta Pond)	Disinfected tertiary treated municipal wastewater	38° 26′ 54″ N	122° 49′ 27″ W	Santa Rosa Creek
012B (Delta Pond)	Disinfected tertiary treated municipal wastewater	38° 26′ 54″ N	122° 49′ 27″ W	Santa Rosa Creek
015	Disinfected tertiary treated municipal wastewater	38° 22′ 17″ N	122° 46′ 31″ W	Laguna de Santa Rosa

Table 2b. Reclamation Sites

Distribution Point	Effluent Description	Distribution Point Latitude	Distribution Point Longitude	Use Location
001	Disinfected tertiary treated municipal wastewater	38° 45′ 46″ N	122° 45′ 38″ W	Geysers Recharge Project
002	Disinfected tertiary treated municipal wastewater	See Table G-1 in Attachment G	See Table G-1 in Attachment G	Irrigation Distribution System

Table 3. Administrative Information

This Order was adopted by the Regional Water Quality Control Board on:	November 21, 2013
This Order shall become effective on:	February 1, 2014
This Order shall expire on:	January 31, 2019
The Permittee shall file a Report of Waste Discharge as application for issuance of new waste discharge requirements in accordance with title 23, California Code of Regulations, no later than:	August 3, 2018
The U.S. Environmental Protection Agency (USEPA) and the Regional Water Quality Control Board have classified this discharge as follows:	Major Discharge

IT IS HEREBY ORDERED, that Waste Discharge Requirements (WDR) Order No. R1-2006-0045, as amended by Regional Water Board Order No. R1-2008-0091, and Monitoring and Reporting Program (MRP) No. R1-2006-0045, are rescinded upon the effective date of this Order except for enforcement purposes, and in order to meet the provisions contained in division 7 of the California Water Code (Water Code) (commencing with section 13000) and regulations and guidelines adopted thereunder, and the provisions of the federal Clean Water Act (CWA) and regulations and guidelines adopted thereunder, the Permittee shall comply with the requirements of this Order. This action in no way prevents the North Coast Regional Water Quality Control Board (Regional Water Board) from taking enforcement action for past violations of the previous permit.

I, Matthias St. John, Executive Officer, do hereby certify that this Order with all attachments is a full, true, and correct copy of the Order adopted by the California Regional Water Quality Control Board, North Coast Region, on November 21, 2013.

_____
Matthias St. John, Executive Officer

Table of Contents

I. Facility Information 5
II. Findings 5
III. Discharge Prohibitions 6
IV. Effluent Limitations And Discharge Specifications 7
A. Effluent Limitations 7
B. Land Discharge Specifications – Not Applicable 10
C. Reclamation Requirements and Specifications 10
D. Other Requirements 12
V. Receiving Water Limitations 15
A. Surface Water Limitations 15
B. Groundwater Limitations 17
VI. Provisions 18
A. Standard Provisions 18
B. Monitoring and Reporting Program (MRP) Requirements 18
C. Special Provisions 18
VII. Compliance Determination 28

List of Tables

Table 1. Permittee Information 1
Table 2a. Discharge Location 1
Table 2b. Reclamation Sites 2
Table 3. Administrative Information 3
Table 4. Technology-Based Effluent Limitations 8
Table 5. Water Quality-Based Effluent Limitations 9
Table 6. Water Reclamation Specifications 11

List of Attachments

Attachment A – Definitions A-1
Attachment B – Map of Santa Rosa Subregional Water Reclamation System B-1
Attachment C – Facility Flow Schematic C-1
Attachment D – Standard Provisions D-1
Attachment E – Monitoring and Reporting Program E-1
Attachment F – Fact Sheet F-1
Attachment G – Water Reclamation Requirements and Provisions G-1
Attachment G-1: Approved Recycled Water Use Sites G-11
Attachment H: Santa Rosa Nutrient Offset Program H-1

I. FACILITY INFORMATION

Information describing the City of Santa Rosa Subregional Water Reclamation System (hereinafter Subregional System) is summarized in Table 1 of this Order and in sections I and II of the Fact Sheet (Attachment F). Section I of the Fact Sheet also includes information regarding the City's permit application.

II. FINDINGS

The California Regional Water Quality Control Board, North Coast Region (hereinafter Regional Water Board), finds:

A. Legal Authorities. This Order is issued pursuant to section 402 of the federal Clean Water Act (CWA) and implementing regulations adopted by the U.S. Environmental Protection Agency (USEPA) and chapter 5.5, division 7 of the Water Code (commencing with section 13370). It shall serve as a National Pollutant Discharge Elimination System (NPDES) permit for point source discharges from the Subregional System to surface waters. This Order also serves as WDRs pursuant to article 4, chapter 4, division 7 of the Water Code (commencing with section 13260) and a Master reclamation permit pursuant to article 4, chapter 4, division 7 of the Water Code (commencing with sections 13260 and 13520, respectively).

B. Basis and Rationale for Requirements. The Regional Water Board developed the requirements in this Order based on information submitted as part of the Permittee's application for permit renewal, monitoring data submitted during the term of the Permittee's previous Order, and other available information. The Fact Sheet (Attachment F) contains background information and rationale for the requirements in this Order, and is hereby incorporated into this Order as additional findings. Attachments A through G are also incorporated into this Order. Attachment B provides a map of the area around the Subregional System. Attachment C provides a flow schematic of the Subregional System.

C. Provisions and Requirements Implementing State Law. The provisions/requirements in subsections III.E, III.F, IV.B, IV.C, IV.D, V.B, VI.C.1.g and h, VI.C.2.b, VI.C.5.a, VI.C.5.d-f , and VI.C.6.a of this Order, and sections VI, VII, VIII.B, IX,A-C, X.D.2 and 4, and X.E of the MRP are included to implement state law only. These provisions/requirements are not required or authorized under the federal CWA; consequently, violations of these provisions/requirements are not subject to the enforcement remedies that are available for NPDES violations.

D. Notification of Interested Parties. The Regional Water Board has notified the Permittee and interested agencies and persons of its intent to prescribe Waste Discharge Requirements for the discharge and has provided them with an opportunity to submit their written comments and recommendations. Details of the notification are provided in the Fact Sheet of this Order (Attachment F).

E. Consideration of Public Comment. The Regional Water Board, in a public meeting, heard and considered all comments pertaining to the discharge. Details of the Public Hearing are provided in the Fact Sheet of this Order.

III. DISCHARGE PROHIBITIONS

A. The discharge of any waste not disclosed by the Permittee or not within the reasonable contemplation of the Regional Water Board is prohibited.

B. Creation of pollution, contamination, or nuisance, as defined by section 13050 of the California Water Code (Water Code) is prohibited.

C. The discharge of sludge or digester supernatant is prohibited, except as authorized under section VI.C.5.c of this Order (Sludge Disposal and Handling Requirements).

D. The discharge or reclamation use of untreated or partially treated waste (receiving a lower level of treatment than described in section II.A of the Fact Sheet) from anywhere within the collection, treatment, or disposal systems is prohibited, except as provided for in section IV.C.2 (Reclamation Specifications) and in Attachment D, Standard Provisions G (Bypass) and H (Upset).

E. Any sanitary sewer overflow (SSO) that results in a discharge of untreated or partially treated wastewater to (a) waters of the State or (b) land that creates pollution, contamination, or nuisance, as defined in Water Code section 13050 (m) is prohibited.

F. The discharge of waste to land that is not owned by the Permittee, governed by City ordinance, or under agreement to use by the Permittee, or for which the Permittee has explicitly permitted such use, is prohibited, except for use for fire suppression as provided in title 22, sections 60307(a) and 60307(b) of the California Code of Regulations (CCR).

G. The discharge of waste at any point not described in Finding II.B of the Fact Sheet or authorized by a permit issued by the State Water Resources Control Board (State Water Board) or another Regional Water Board is prohibited, except for use for fire suppression.

H. The average daily dry weather flow (ADWF) of waste into the Subregional System in excess of 21.34 MGD is prohibited until such time as additional treatment, storage, and/or total reclamation capacity has been added to accommodate a higher ADWF, not to

exceed 25.9 MGD. Compliance with this prohibition shall be determined as defined in section VII.M and in accordance with section VI.C.6.a of this Order.

I. The discharge of wastewater effluent from the Subregional System to the Russian River or its tributaries is prohibited during the period from May 15 through September 30 of each year.

J. During the period from October 1 through May 14 (discharge season), discharges of advanced treated wastewater to the unnamed ditch, the Laguna de Santa Rosa or Santa Rosa Creek, tributaries to the Russian River, shall not exceed five percent of the flow of the Russian River, as measured at the Hacienda Bridge (USGS Gage No. 11467000). For purposes of this Order, compliance with this discharge prohibition shall be determined as follows:

1. The discharge of advanced treated wastewater shall be adjusted at least once daily to avoid exceeding, to the extent practicable, five percent of the most recent daily flow measurement of the Russian River at Hacienda Bridge. Daily flow shall be based on flow meter comparisons reasonably read between the hours of 12:01 am to 12:00 midnight; and

2. In no case shall the total volume of advanced treated wastewater discharged in a calendar month exceed five percent of the total volume of the Russian River at Hacienda Bridge in the same calendar month. At the beginning of the discharge season, the monthly flow volume comparisons shall be based on the date when the discharge commenced to the end of the calendar month. At the end of the discharge season, the monthly flow volume shall be based on the first day of the calendar month to the date when the discharge ceased for the season.

K. The discharge of any radiological, chemical, or biological warfare agent into waters of the state is prohibited under Water Code section 13375.

IV. EFFLUENT LIMITATIONS AND DISCHARGE SPECIFICATIONS

A. Effluent Limitations

1. Final Effluent Limitations – Technology-Based Effluent Limitations

a. The discharge of advanced treated wastewater, as defined by the Laguna Treatment Plant's design and the numeric limitations below, to all discharge locations shall maintain compliance with the following effluent limitations at Monitoring Location EFF-001, as described in Monitoring and Reporting Program (MRP)(Attachment E), when discharges occur:

Table 4. Technology-Based Effluent Limitations

Parameter	Units	Effluent Limitations				
		Average Monthly[1]	Average Weekly[1]	Maximum Daily[1]	Instantaneous Minimum[1]	Instantaneous Maximum[1]
Biochemical Oxygen Demand 5-day @ 20°C (BOD_5)	mg/L	10	15	--	--	--
Total Suspended Solids (TSS)	mg/L	10	15	--	--	--

Table Notes:
1. See Definitions in Attachment A and Compliance Determination discussion in section VII of this Order.

b. Disinfection. The disinfected effluent, sampled in each of the disinfection channels, shall not contain concentrations of total coliform bacteria exceeding the following concentrations, as measured at Monitoring Location EFF-001:

i. The median concentration of the disinfection channels shall not exceed a Most Probable Number (MPN) of 2.2 per 100 milliliters (mL), using the daily bacteriological results[1] of the last 7 days for which analyses have been completed[2]; and

ii. The number of coliform bacteria shall not exceed an MPN of 23 per 100 mL in more than one daily result[1] in any 30-day period.

iii. No daily result[1] shall exceed an MPN of 240 total coliform bacteria per 100 mL.

c. Percent Removal. The average monthly percent removal of BOD_5 and TSS shall not be less than 85 percent. Percent removal shall be determined from the monthly average value of influent wastewater concentration in comparison to the monthly average value of effluent concentration for the same constituent over the same time period as measured at Monitoring Location EFF-001.

2. Final Effluent Limitations – Water Quality-Based Effluent Limitations

a. The Permittee shall maintain compliance with the following effluent limitations at Discharge Points 006A, 006B, 012A(1), and 015, with compliance measured at Monitoring Locations EFF-006A, EFF-006B, EFF-012A(1), and EFF-001, respectively, as described in the MRP, when discharges occur:

---

[1] The daily result is the geometric mean of samples analyzed from all on-line channels.

[2] See section VII.C of this Order regarding compliance with bacteriological limitations.

Table 5. Water Quality-Based Effluent Limitations

Parameter	Units	Effluent Limitations				
		Average Monthly[1]	Average Weekly[1]	Maximum Daily[1]	Instantaneous Minimum[1]	Instantaneous Maximum[1]
Chlorodibromomethane	µg/L	0.4	--	1.0	--	--
Dichlorobromomethane	µg/L	0.56	--	1.3	--	--

Table Notes:
1. See Definitions in Attachment A and Compliance Determination discussion in section VII of this Order.

b. The Permittee shall maintain compliance with the following effluent limitations at Discharge Points 006A, 006B, 012A(1), 012A(2), 012B, and 015, with compliance measured at Monitoring Locations EFF-006A, EFF-006B, EFF-012A(1), EFF-012A(2), EFF-012B, and EFF-001, respectively, as described in the MRP, when discharges occur:

i. Effluent Limitation for Total Phosphorus for Compliance with Narrative Objective for Biostimulatory Substances. There shall be no net loading of total phosphorus to the water bodies of the greater Laguna de Santa Rosa watershed.[3]

Compliance with this effluent limitation shall be determined in accordance with section VII.N (Compliance Determination) of this Order.

ii. Effluent Limitation for Total Nitrogen. The average monthly concentration of total nitrogen shall not exceed 10.6 mg/L.

iii. Effluent Limitation for Acute Toxicity. There shall be no acute toxicity in treated wastewater discharged to the Laguna de Santa Rosa or Santa Rosa Creek. The Permittee will be considered in compliance with this limitation when the survival of aquatic organisms in a 96-hour bioassay of undiluted effluent complies with the following.

(a) Minimum for any one bioassay: 70 percent survival; and

(b) Median for any three or more consecutive bioassays: at least 90 percent survival.

Compliance with these effluent limitations shall be determined in accordance with section VII.K (Compliance Determination) of this Order.

[3] For purposes of this Order, the greater Laguna de Santa Rosa watershed consists of the Laguna de Santa Rosa, Santa Rosa Creek, and Mark West Creek hydrologic subareas (HSAs), as mapped in the Basin Plan.

iv. **Effluent Limitations for pH**. The discharge of treated effluent shall be within the pH limits of 6.5 and 8.5 standard units at all times.

Compliance with these effluent limitations shall be determined in accordance with sections VII.G and H (Compliance Determination) of this Order.

B. Land Discharge Specifications – Not Applicable

This section is not applicable to the Permittee as treated wastewater is not discharged to or applied to land for the purpose of disposal. The Permittee reclaims treated wastewater, thus the Permittee has Reclamation Requirements and Specifications rather than Land Discharge Specifications.

C. Reclamation Requirements and Specifications

Reclaimed water delivered to Distribution Points 001 and 002 shall maintain compliance with the following reclamation requirements and specifications, when deliveries occur:

1. Reclamation Requirements

a. The Permittee shall comply with applicable state and local requirements regarding the production and use of reclaimed wastewater, including requirements of Water Code sections 13500 – 13577 (Water Reclamation) and California Department of Public Health (CDPH) regulations at title 22, sections 60301 – 60357 of the California Code of Regulations (Water Recycling Criteria).

b. The Permittee shall comply with the requirements contained in Reclamation Requirements and Provisions – Attachment G of this Order.

2. Reclamation Specifications

a. All treated effluent delivered to the recycled water system is from on-site recycled water storage ponds, therefore, the Permittee shall maintain compliance with the following reclamation specifications at Monitoring Location EFF-001 for deliveries to the Geysers Recharge Project and to the recycled water system (Distribution Points 001 and 002):

Table 6. Water Reclamation Specifications

Parameter	Units	Effluent Limitations				
		Average Monthly[1]	Average Weekly[1]	Maximum Daily[1]	Instantaneous Minimum[1]	Instantaneous Maximum[1]
BOD_5	mg/L	10	15	--	--	--
TSS	mg/L	10	15	--	--	--
pH	s.u.	--	--	--	6.0	9.0

Table Notes:
1. See Definitions in Attachment A and Compliance Determination discussion in section VII of this Order.

b. Disinfection. The disinfected effluent, sampled in each of the disinfection channels, shall not contain concentrations of total coliform bacteria exceeding the following concentrations, as measured at Monitoring Location EFF-001:

i. The median concentration of the disinfection channels shall not exceed a MPN of 2.2 per 100 milliliters (mL), using the daily bacteriological results[4] of the last 7 days for which analyses have been completed[5]; and

ii. The number of coliform bacteria shall not exceed an MPN of 23 per 100 mL in more than one daily result in any 30-day period.

iii. No daily result shall exceed an MPN of 240 total coliform bacteria per 100 mL.

c. Diversions. In the event of treatment plant failure such that the disinfected effluent does not meet water Reclamation Specifications in section IV.C.2.b, the Permittee is authorized to divert the partially-treated waste to City-owned land provided that all diversions of partially-treated waste comply with the Laguna Treatment Plant emergency response procedure (Off-Spec Condition Response Plan) and consistent with title 22 requirements.

3. Reclamation Capacity. The Permittee shall maintain, at a minimum, a total reclamation capacity of 4,015 million gallons for Geysers recharge, and maintain the capability to irrigate 2,590 million gallons per year at 21.34 mgd average dry weather flow. Prior to allowing an increase in the permitted water reclamation flows, the Permittee shall submit to the Regional Water Board, an engineering report detailing modifications to the treatment and/or reclamation capacity. The engineering report shall demonstrate the capability of meeting the Subregional System's capacity requirements of 25.9 mgd ADWF without necessitating an increase in discharge volumes to surface waters above those permitted. The Incremental Recycled Water Program (IRWP) was developed by the City of Santa Rosa as a means of planning for

[4] The daily result is the geometric mean of samples analyzed from all on-line channels.

[5] See section VII.C of this Order regarding compliance with bacteriological limitations.

future flows to the Subregional Water Reclamation System. The Master Plan for the IRWP has been designed to meet the Subregional System's capacity requirements and manages flows with a mixture of conservation and reuse. The design ADWF volume permitted to be reclaimed may be modified provided the Permittee demonstrates the agreements, modifications, and capacity are adequate to ensure surface water discharge volumes remain unchanged.

4. **Reclamation Operation.** The Permittee shall operate recycled water storage and distribution according to the *Discharge Management Plan*, submitted May 2011 and approved by the Executive Officer, as may be amended and subsequently approved by the Executive Officer, from time to time.

D. Other Requirements

1. Filtration Process Requirements

a. **Filtration Rate.** The rate of filtration through the tertiary filters, as measured at EFF-001 shall not exceed 5 gallons per minute per square foot of surface area or other filtration rates authorized in writing by the Executive Officer and under conditions recommended by CDPH.

b. **Turbidity.** The effluent from the filtration system shall at all times be filtered such that the filtered effluent does not exceed any of the following specifications at Monitoring Location INT-001B, prior to transfer to the disinfection unit.

i. An average of 2 Nephelometric Turbidity Units (NTU) during a 24-hour period;

ii. 5 NTU more than 5 percent of the time during a 24-hour period; and

iii. 10 NTU at any time.

iv. Filtered effluent in excess of the turbidity specifications shall not enter the reclamation distribution system. Pursuant to title 22 sections 60304 and 60307, the Permittee shall have the capability to automatically activate chemical addition or divert the wastewater should the filter influent exceed 10 NTU at any time or 5 NTU for more than 15 minutes, or if the filter effluent turbidity exceeds 2 NTU. The Permittee shall provide notification of non-compliance with the filtration process requirements as required in section VI.A.2.b of this Order.

2. Disinfection Process Requirements for UV Disinfection System

The Permittee shall operate the ultraviolet (UV) disinfection system in accordance with the following operating protocol and technical and administrative requirements

in order to demonstrate compliance with Reclamation Specifications specified in section IV.C.2.b of this Order:

a. Disinfection of tertiary treated wastewater shall be accomplished using a disinfection process that, when combined with the filtration process, has been demonstrated to inactivate and/or remove 99.999 percent of the plaque forming units of F-specific bacteriophage MS2, or polio virus in the wastewater. A virus that is at least as resistant to disinfection as polio virus may be used for purposes of the demonstration. The demonstration shall be performed on-site at the Subregional System's Laguna Treatment Plant at both maximum and minimum plant flows. At a minimum, the Permittee shall demonstrate a 99.99 percent removal and/or inactivation through the UV disinfection system only.

b. The Permittee shall provide continuous, reliable monitoring of flow per channel, UV transmittance, UV dose, UV power, and turbidity. The Permittee must demonstrate compliance with the UV dose requirement.

c. The Permittee shall operate the UV disinfection system to provide a minimum UV dose of 100 millijoules per square centimeter (mJ/cm^2) at all times, unless otherwise approved by CDPH. This dose shall apply to recycled water for delivery to use sites that require "disinfected tertiary recycled water." All other use sites and surface water discharges do not require a dose of 100 mJ/cm^2.

d. The UV transmittance (at least 254 nanometers) in the wastewater shall not fall below 50 percent of maximum at any time, unless otherwise approved by CDPH.

e. The quartz sleeves and cleaning system components shall be visually inspected per the manufacturer's operation manual for physical wear (scoring, solarization, seal leaks, etc.) and to check the efficacy of the cleaning system.

f. The quartz sleeves shall be wiped/cleaned at least every 12 hours.

g. Upon review and approval of the UV disinfection system by CDPH, the Permittee shall comply with all of the conditions set out by CDPH for its approval of the UV disinfection system.

h. The UV disinfection system shall be operated in accordance with an approved operations and maintenance plan, which specifies clearly the operational limits and responses required for critical alarms. A copy of the approved operations plan should be maintained at the treatment plant and be readily available to operations personnel and regulatory agencies. A quick reference plant operations

data sheet should be posted at the treatment plant and include the following information:

i. The alarm set points for secondary and tertiary turbidity, high and low flow, UV dose and transmittance, UV lamp operation hours, and power.

ii. The values of secondary and tertiary turbidity, high and low flow, UV dose and transmittance, UV lamp operation hours, and power when flow must be diverted to waste.

iii. The values of high daily and weekly median total coliform when flow must be diverted to waste.

iv. The required frequency of calibration for all meters measuring turbidity, flow, UV transmittance, and power.

v. The required frequency of mechanical cleaning/wiping and equipment inspection.

vi. The UV lamp age tracking procedures and replacement intervals.

i. The UV lamps shall be maintained below the maximum value of 10,000 hours of operation.

j. Flow meters and UV transmittance (UVT) monitors must be properly calibrated to ensure proper disinfection.

k. UVT meter must be inspected and checked against a reference bench-top unit weekly to document accuracy.

l. If the on-line analyzer UVT reading varies from the bench-top spectrophotometer UVT reading by 2 percent or more, the on-line UVT analyzer must be recalibrated by a procedure recommended by the manufacturer.

m. The Trojan UV4000 UV system must be operated with a built-in automatic reliability feature that must be triggered when the system is below the target UV dose. If the measured UV dose goes below the minimum UV dose, the UV reactor in question must alarm and startup the next available UV lamp bank or reactor.

n. Equivalent or substitutions of equipment are not acceptable without an adequate demonstration of equivalent disinfection performance.

o. When extreme storm flow conditions are anticipated, the Permittee shall operate the UV disinfection system in accordance with a CDPH-approved Emergency Operation, Redundancy, and Response Plan.

V. RECEIVING WATER LIMITATIONS

Receiving water limitations are based on water quality objectives contained in the Basin Plan and are a required part of this Order. However, a receiving water condition not in conformance with the limitation is not necessarily a violation of this order. Compliance with receiving water limitations shall be measured at monitoring locations described in the MRP. The Regional Water Board may require an investigation to determine cause and culpability prior to asserting a violation has occurred. Discharges from the Subregional System shall not cause the following in the receiving waters.

A. Surface Water Limitations

1. The discharge shall not cause the dissolved oxygen concentration of receiving waters to be depressed below 7.0 mg/L. Additionally, the discharge shall not cause the dissolved oxygen content of receiving waters to fall below 10.0 mg/L more than 50 percent of the time, or below 7.5 mg/L more than 10 percent of the time in a calendar year. In the event that the receiving waters are determined to have a dissolved oxygen concentration of less than 7.0 mg/L, the discharge shall not depress the dissolved oxygen concentration below the existing level.

2. The discharge shall not cause the pH of receiving waters to be depressed below 6.5 nor raised above 8.5. Within this range, the discharge shall not cause the pH of the receiving waters to be changed at any time more than 0.5 units from that which occurs naturally.

3. The discharge shall not cause the turbidity of receiving waters to be increased more than 20 percent above naturally occurring background levels.

4. The discharge shall not cause receiving waters to contain suspended material in concentrations that cause nuisance or adversely affect beneficial uses.

5. The discharge shall not cause receiving waters to contain floating materials, including solids, liquids, foams, and scum, in concentrations that cause nuisance or adversely affect beneficial uses.

6. The discharge shall not cause receiving waters to contain taste- or odor-producing substances in concentrations that impart undesirable tastes or odors to fish flesh or other edible products of aquatic origin, that cause nuisance, or that adversely affect beneficial uses.

7. The discharge shall not cause coloration of receiving waters that causes nuisance or adversely affects beneficial uses.

8. The discharge shall not cause bottom deposits in receiving waters to the extent that such deposits cause nuisance or adversely affect beneficial uses.

9. The discharge shall not cause receiving waters to contain concentrations of biostimulatory substances that promote objectionable aquatic growth to the extent that such growth causes nuisance or adversely affects beneficial uses. Compliance with water quality-based effluent limitations for total phosphorus and total nitrogen established in section IV.A.2.b of this Order will satisfy this requirement.

10. The discharge shall not cause receiving waters to contain toxic substances in concentrations that are toxic to, or that produce detrimental physiological responses in humans, plants, animals, or aquatic life. Compliance with this objective will be determined by use of indicator organisms, analyses of species diversity, population density, growth anomalies, bioassays of appropriate duration, or other appropriate methods, as specified by the Regional Water Board.

11. The following temperature limitations apply to the discharge to the receiving waters:

a. When the receiving water is below 58°F, the discharge shall cause an increase of no more than 4°F in the receiving water, and shall not increase the temperature of the receiving water beyond 59°F. No instantaneous increase in receiving water temperature shall exceed 4°F at any time.

b. When the receiving water is between 59°F and 67°F, the discharge shall cause an increase of no more than 1°F in the receiving water. No instantaneous increase in receiving water temperature shall exceed 1°F at any time.

c. When the receiving water is above 68°F, the discharge shall not cause an increase in temperature of the receiving water.

d. Additionally, the discharge shall not cause the 7-day average of the daily maximum receiving water temperature to exceed 64.4°F.

12. The discharge shall not cause an individual pesticide or combination of pesticides to be present in concentrations that adversely affect beneficial uses. The discharge shall not cause bioaccumulation of pesticide, fungicide, wood treatment chemical, mercury, or other toxic pollutant concentrations in bottom sediments or aquatic life to levels which are harmful to human health.

13. The discharge shall not cause receiving waters to contain concentrations of pesticides in excess of the limiting concentrations set forth in Table 3-2 of the Basin Plan or in excess of more stringent Maximum Contaminant Levels (MCLs) established for these pollutants in title 22, division 4, chapter 15, articles 4 and 5.5 of the CCR.

14. The discharge shall not cause receiving waters to contain oils, greases, waxes, or other materials in concentrations that result in a visible film or coating on the surface of the water or on objects in the water, that cause nuisance, or that otherwise affect beneficial uses.

15. The discharge shall not cause a violation of any applicable water quality standard for receiving waters adopted by the Regional Water Board or the State Water Board, as required by the federal CWA and regulations adopted thereunder. If more stringent applicable water quality standards are promulgated or approved pursuant to section 303 of the CWA, or amendments thereto, the Regional Water Board will revise and modify this Order in accordance with such more stringent standards.

16. The discharge shall not cause concentrations of chemical constituents to occur in excess of limits specified in Table 3-2 of the Basin Plan or in excess of more stringent MCLs established for these pollutants in title 22, division 4, chapter 15, articles 4 and 5.5 of the CCR.

17. The discharge shall not cause receiving waters to contain radionuclides in concentrations which are deleterious to human, plant, animal or aquatic life, nor which result in the accumulation of radionuclides in the food web to an extent which presents a hazard to human, plant, animal or indigenous aquatic life.

B. Groundwater Limitations

1. The collection, storage, and use of wastewater or recycled water shall not cause a statistically significant degradation of groundwater quality unless a technical evaluation is performed that demonstrates that any degradation that could reasonably be expected to occur, after implementation of all regulatory requirements (e.g., Title 27) and reasonable best management practices, will not violate groundwater quality objectives or cause impacts to beneficial uses of groundwater.

2. The collection, treatment, storage, and/or use of wastewater or recycled water shall not cause alterations of groundwater that result in chemical concentrations in excess of limits specified in title 22, sections 64431 (Tables 2 and 3) and 64444, and the Basin Plan.

3. The collection, treatment, storage and disposal of the treated wastewater shall not cause levels of radionuclides in groundwater in excess of the limits specified in title 22, division 4, chapter 15, article 5, section 64443 of the CCR.

4. The collection, storage, and use of wastewater or recycled water shall not cause groundwater to contain taste- or odor-producing substances in concentrations that cause nuisance or adversely affect beneficial uses.

VI. PROVISIONS

A. Standard Provisions

1. **Federal Standard Provisions.** The Permittee shall comply with all applicable Standard Provisions included in Attachment D of this Order.
2. **Regional Water Board Standard Provisions.** The Permittee shall comply with the following Regional Water Board standard provisions. In the event that there is any conflict, duplication, or overlap between provisions specified by this Order, the more stringent provision shall apply:

   a. Failure to comply with provisions or requirements of this Order, or violation of other applicable laws or regulations governing discharges from the Subregional System, may subject the Permittee to administrative or civil liabilities, criminal penalties, and/or other enforcement remedies to ensure compliance. Additionally, certain violations may subject the Permittee to civil or criminal enforcement from appropriate local, state, or federal law enforcement entities.

   b. In the event the Permittee does not comply or will be unable to comply for any reason, with any prohibition, interim or final effluent limitation, land discharge specification, reclamation specification, receiving water limitation, or provision of this Order that may result in a significant threat to human health or the environment, such as inundation of treatment components, breach of pond containment, recycled water main break or equivalent release, irrigation runoff, etc., that results in a discharge to a drainage channel or a surface water, the Permittee shall notify Regional Water Board staff within 24 hours of having knowledge of such noncompliance. Spill notification and reporting shall be conducted in accordance with section V.E of Attachment D and section X.E of the Monitoring and Reporting Program.

B. Monitoring and Reporting Program (MRP) Requirements

The Permittee shall comply with the MRP included as Attachment E to this Order, and future revisions thereto.

C. Special Provisions

1. **Reopener Provisions**

   a. Standard Revisions. If applicable water quality standards are promulgated or approved pursuant to section 303 of the CWA, or amendments thereto, the Regional Water Board may reopen this Order and make modifications in accordance with such revised standards.

b. **Reasonable Potential.** This Order may be reopened for modification to include an effluent limitation, if monitoring establishes that the discharge causes, or has the reasonable potential to cause or contribute to, an excursion above a water quality criterion or objective applicable to the receiving water.

c. **Whole Effluent Toxicity.** As a result of a Toxicity Reduction Evaluation (TRE), this Order may be reopened to include a chronic toxicity limitation, a new acute toxicity limitation, and/or a limitation for a specific toxicant identified in the TRE. Additionally, if a numeric chronic toxicity water quality objective is adopted by the State Water Board, this Order may be reopened to include a numeric chronic toxicity effluent limitation based on that objective.

d. **303(d)-Listed Pollutants.** The Regional Water Board plans to develop and adopt total maximum daily loads (TMDLs) for nitrogen, phosphorus, dissolved oxygen, sediment, temperature, and mercury that will specify wasteload allocations (WLAs) for point sources and load allocations (LAs) for nonpoint sources, as appropriate. Following the adoption of these TMDLs, this Order may be reopened and modified to include final WQBELs based on applicable WLAs.

e. **Water Effects Ratios (WERs) and Metal Translators.** A default WER of 1.0 has been used in this Order for calculating CTR criteria for applicable priority pollutant inorganic constituents. In addition, default dissolved-to-total metal translators have been used to convert water quality objectives from dissolved to total recoverable when developing effluent limitations for copper. If the Permittee performs studies to determine site-specific WERs and /or site-specific dissolved-to-total metal translators and submits a report that demonstrates that WER or translator studies were performed in accordance with USEPA or other approved guidance, this Order may be reopened to modify the effluent limitations for the applicable constituents.

f. **Nutrients.** This Order contains effluent limitations and monitoring requirements for nitrogen compounds and total phosphorus. If new water quality objectives for nutrients are established, if monitoring data indicate the need for new or revised effluent limitations for any of these parameters, or if new or revised methods for compliance with effluent limitations for any of these parameters are developed, this Order may be reopened and modified to include new or modified effluent limitations or other requirements, as necessary.

g. **Salt and Nutrient Management Plans (SNMPs).** The Recycled Water Policy adopted by the State Water Board on February 3, 2009 and effective May 14, 2009 recognizes the fact that some groundwater basins in the state contain salts and nutrients that exceed or threaten to exceed water quality objectives in the applicable Basin Plans, and that not all Basin Plans include adequate implementation procedures for achieving or ensuring compliance with the water

quality objectives for salt or nutrients. The Recycled Water Policy finds that the appropriate way to address salt and nutrient issues is through the development of regional or subregional SNMPs rather than through imposing requirements solely on individual recycled water projects. This Order may be reopened to incorporate provisions consistent with any SNMPs adopted by the Regional Water Board.

h. **Title 22 Engineering Report.** This Order implements title 22 requirements to protect public health. If future revisions to the Permittee's title 22 engineering report require modifications to this Order to adequately implement title 22, this Order may be reopened and modified as necessary.

2. **Special Studies, Technical Reports and Additional Monitoring Requirements**

a. **Toxicity Reduction Requirements**

i. **Whole Effluent Toxicity.** In addition to a numeric limitation for whole effluent acute toxicity, the MRP requires routine monitoring for whole effluent chronic toxicity to determine compliance with the Basin Plan's narrative water quality objective for toxicity. As established by the MRP, if either of the effluent limitations for acute toxicity is exceeded (a single sample with less than 70% survival or a three sample median of less than 90% survival) or if the chronic toxicity monitoring trigger of either a single sample maximum of 1.6 chronic toxicity units (TUc) or a monthly median of 1.0 TUc (where TUc = 100/NOEC)[6] is exceeded, the Permittee shall conduct accelerated monitoring as specified in section V. of the MRP.

Results of accelerated toxicity monitoring will indicate a need to conduct a TRE, if toxicity persists; or it will indicate that a return to routine toxicity monitoring is justified because persistent toxicity has not been identified by accelerated monitoring. TREs shall be conducted in accordance with the TRE workplan prepared by the Permittee pursuant to Section VI.C.2.a.ii of this Order, below.

ii. **Toxicity Reduction Evaluations (TRE) Workplan.** The Permittee submitted a TRE workplan to the Regional Water Board on May 7, 2007. This plan shall be reviewed by the Permittee within 180 days of the adoption of this Order and updated as necessary in order to remain current and applicable to the discharge and discharge facilities. The Permittee shall notify the Regional Water Board of this review and submit any revision of the TRE workplan with each Report of Waste Discharge.

[6] This Order does not allow any credit for dilution for the chronic condition. Therefore, a TRE is triggered when the effluent exhibits a pattern of toxicity at 100% effluent.

The TRE workplan shall describe the steps the Permittee intends to follow if toxicity is detected, and should include at least the following items:

a) A description of the investigation and evaluation techniques that would be used to identify potential causes and sources of toxicity, effluent variability, and treatment system efficiency.

b) A description of the Permittee's methods of maximizing in-house treatment efficiency, good housekeeping practices, and a list of all chemicals used in the operation of the Subregional System.

c) If a toxicity identification evaluation (TIE) is necessary, an indication of the person who would conduct the TIEs (i.e., an in-house expert or an outside contractor).

iii. Toxicity Reduction Evaluations (TRE) Implementation. The TRE shall be conducted in accordance with the following:

a) The TRE shall be initiated within 30 days of the date of completion of the accelerated monitoring testing, required by Sections V.A.7 and V.B.9 of the MRP, observed to exceed either the acute or chronic toxicity trigger.

b) The TRE shall be conducted in accordance with the Permittee's TRE workplan.

c) The TRE shall be in accordance with current technical guidance and reference material including, at a minimum, the USEPA manual EPA/833B 99/002.

d) The TRE may end at any stage if, through monitoring results, it is determined that there is no longer consistent toxicity. The Permittee shall notify the Regional Water Board of this determination.

e) The Permittee may initiate a TIE as part of the TRE process to identify the cause(s) of toxicity. TIEs shall be conducted in accordance with current technical guidance and reference material, including, at a minimum, the Permittee shall use the USEPA acute and chronic manuals, EPA/600/6-91/005F (Phase I), EPA/600/R-92/080 (Phase II), and EPA-600/R-92/081 (Phase III).

f) As toxic substances are identified or characterized, the Permittee shall continue the TRE by determining the source(s) and evaluating alternative strategies for reducing or eliminating the substances from the discharge. All reasonable steps shall be taken to reduce toxicity to levels consistent with chronic toxicity parameters.

g) Many recommended TRE elements accompany required efforts of source control, pollution prevention, and storm water control programs. TRE

efforts should be coordinated with such efforts. To prevent duplication of efforts, evidence of complying with requirements of recommendations of such programs may be acceptable to comply with requirements of the TRE.

h) The Regional Water Board recognizes that chronic toxicity may be episodic and identification of a reduction of sources of chronic toxicity may not be successful in all cases. Consideration of enforcement action by the Regional Water Board will be based in part on the Permittee's actions and efforts to identify and control or reduce sources of consistent toxicity.

b. Storage Pond Leak Monitoring Program. By March 1, 2014, the Permittee shall review and revise as appropriate and resubmit for approval by the Regional Water Board Executive Officer its Storage Pond Leak Monitoring Program. The Storage Pond Leak Monitoring Program shall commence within 90 days of Executive Officer approval of the program.

3. Best Management Practices and Pollution Prevention

a. Pollutant Minimization Program (PMP)

i. The Permittee shall, as required by the Executive Officer, develop and conduct a PMP as further described below when there is evidence (e.g., sample results reported as detected, but not quantified (DNQ) when the effluent limitation is less than the method detection limit (MDL), sample results from analytical methods more sensitive than those methods required by this Order, presence of whole effluent toxicity, health advisories for fish consumption, results of benthic or aquatic organism tissue sampling) that a priority pollutant is present in the effluent above an effluent limitation and either:

a) A sample result is reported as DNQ and the effluent limitation is less than the Reporting Level (RL); or

b) A sample result is reported as "Not Detected" (ND) and the effluent limitation is less than the MDL, using definitions described in Attachment A and reporting protocols described in MRP section X.B.5.

ii. The PMP shall include, but not be limited to, the following actions and submittals acceptable to the Regional Water Board:

a) An annual review and semi-annual monitoring of potential sources of the reportable priority pollutant(s), which may include fish tissue monitoring and other bio-uptake sampling;

b) Quarterly monitoring for the reportable priority pollutant(s) in the influent to the wastewater treatment system;

c) Submittal of a control strategy designed to proceed toward the goal of maintaining concentrations of the reportable priority pollutant(s) in the effluent at or below the effluent limitation;

d) Implementation of appropriate cost-effective control measures for the reportable priority pollutant(s), consistent with the control strategy; and

e) An annual status report that shall be submitted as part of the Annual Facility Report due March 1st to the Regional Water Board and shall include:

1) All PMP monitoring results for the previous year;

2) A list of potential sources of the reportable priority pollutant(s);

3) A summary of all actions undertaken pursuant to the control strategy; and

4) A description of actions to be taken in the following year.

4. Construction, Operation and Maintenance Specifications

a. This Order (Attachment D, Standard Provision I.D) requires that the Permittee at all times properly operate and maintain all facilities and systems of treatment and control (and related appurtenances) that are installed or used by the Permittee to achieve compliance with this Order. Proper operation and maintenance includes adequate laboratory quality control and appropriate quality assurance procedures.

b. The Permittee shall maintain an updated Operation and Maintenance (O&M) Manual for the operational components of the Subregional System. The Permittee shall update the O&M Manual, as necessary, to conform to changes in operation and maintenance of the Facility. The O&M Manual shall be readily available to operating personnel onsite and for review by state or federal inspectors. The O&M Manual shall include the following.

i. Description of the Subregional System's organizational structure showing the number of employees, duties and qualifications and plant attendance schedules (daily, weekends and holidays, part-time, etc.). The description should include documentation that the personnel are knowledgeable and qualified to operate the Subregional System so as to achieve the required level of treatment at all times.

ii. Detailed description of safe and effective operation and maintenance of treatment processes, process control instrumentation and equipment.

iii. Description of laboratory and quality assurance procedures.

iv. Process and equipment inspection and maintenance schedules.

v. Description of safeguards to assure that, should there be reduction, loss, or failure of electric power, the Permittee will be able to comply with requirements of this Order.

vi. Description of preventive (fail-safe) and contingency (response and cleanup) plans for controlling accidental discharges, and for minimizing the effect of such events. These plans shall identify the possible sources (such as loading and storage areas, power outage, waste treatment unit failure, process equipment failure, tank and piping failure) of accidental discharges, untreated or partially treated waste bypass, and polluted drainage.

5. Special Provisions for Municipal Facilities (POTWs Only)

a. Wastewater Collection Systems

i. Statewide General WDRs for Sanitary Sewer Systems

The Permittee has coverage under, and is separately subject to, the requirements of State Water Board Order No. 2006-003-DWQ, Statewide General WDRs for Sanitary Sewer Systems. As such, the Permittee provides notification and reporting of SSOs in accordance with the requirements of Order No. 2006-0003-DWQ and any revisions thereto for operation of its wastewater collection system.

b. Industrial Pretreatment Provisions

i. The Permittee shall be responsible for the performance of all pretreatment requirements contained in title 40 of the Code of Federal Regulations (CFR) Part 403 and shall be subject to enforcement actions, penalties, fines and other remedies by the USEPA or other appropriate parties as provided in the CWA, as amended (33 USC 1351 et seq.). The Permittee shall implement and enforce its approved Wastewater Treatment Facility (WWTF) Pretreatment Program. The Permittee's approved WWTF Pretreatment Program is hereby made an enforceable condition of this Order. USEPA may initiate enforcement action against an industrial user for noncompliance with applicable standards and requirements as provided in the CWA.

ii. The Permittee shall enforce the requirements promulgated under Sections 307(b), 307(c), 307(d) and 402(d) of the CWA. The Permittee shall cause industrial users subject to Federal Categorical Standards to achieve compliance no later than the date specified in those requirements or, in the case of a new industrial user, upon commencement of the discharge.

iii. The Permittee shall perform the pretreatment functions as required in 40 CFR Part 403 including, but not limited to:

(a.) Implement the necessary legal authorities as provided in 40 CFR 403.8(f)(1);

(b.) Enforce the pretreatment requirements under 40 CFR 403.5 and 403.6;

(c.) Implement the programmatic functions as provided in 40 CFR 403.8(f)(2); and

(d.) Provide the requisite funding and personnel to implement the pretreatment program as provided in 40 CFR 403.8(f)(3).

iv. The Permittee shall implement, as more completely set forth in 40 CFR 403.5, the necessary legal authorities, programs, and controls to ensure that the following incompatible wastes are not introduced to the treatment system, where incompatible wastes are:

(a.) Wastes which create a fire or explosion hazard in the treatment works;

(b.) Wastes which will cause corrosive structural damage to treatment works, but in no case wastes with a pH lower than 5.0, unless the works is specially designed to accommodate such wastes;

(c.) Solid or viscous wastes in amounts which cause obstruction to flow in sewers, or which cause other interference with proper operation or treatment works;

(d.) Any waste, including oxygen demanding pollutants (BOD, etc.), released in such volume or strength as to cause inhibition or disruption in the treatment works, and subsequent treatment process upset and loss of treatment efficiency;

(e.) Heat in amounts that inhibit or disrupt biological activity in the treatment works, or that raise influent temperatures above 40°C (104°F);

(f.) Petroleum oil, non-biodegradable cutting oil, or products of mineral oil origin in amounts that will cause interference or pass through;

(g.) Pollutants which result in the presence of toxic gases, vapors, or fumes within the treatment works in a quantity that may cause acute worker health and safety problems; and

(h.) Any trucked or hauled pollutants, except at points predesignated by the Permittee.

v. The Permittee shall implement, as more completely set forth in 40 CFR 403.5, the legal authorities, programs, and controls necessary to ensure that indirect discharges do not introduce pollutants into the sewerage system that, either alone or in conjunction with a discharge or discharges from other sources:

(a.) Flow through the system to the receiving water in quantities or concentrations that cause a violation of this Order, or

(b.) Inhibit or disrupt treatment processes, treatment system operations, or sludge processes, use, or disposal and either cause a violation of this Order or prevent sludge use or disposal in accordance with this Order.

c. Sludge Disposal and Handling Requirements

i. Sludge, as used in this Order, means the solid, semisolid, and liquid residues removed during primary, secondary, or advanced wastewater treatment processes. Solid waste refers to grit and screenings generated during preliminary treatment. Biosolids refers to sludge that has been treated, tested, and demonstrated to be capable of being beneficially and legally used pursuant to federal and state regulations as a soil amendment for agriculture, silviculture, horticulture, and land reclamation activities.

ii. All collected sludges and other solid waste removed from liquid wastes shall be removed from screens, sumps, ponds, and tanks as needed to ensure optimal plant operation and disposed of in accordance with applicable federal and State regulations.

iii. The use and disposal of biosolids shall comply with all of the land application and disposal requirements in 40 CFR 503, which are enforceable by the USEPA, not the Regional Water Board. If during the life of this Order, the State accepts primacy for implementation of 40 CFR 503, the Regional Water Board may also initiate enforcement where appropriate.

iv. Sludge or biosolids that are disposed of in a municipal solid waste landfill or used as daily landfill cover shall meet the applicable requirements of 40 CFR 258. In the annual self-monitoring report, the Permittee shall report the amount of sludge placed in a landfill and the landfill(s) which received the sludge or biosolids.

v. The Permittee shall take all reasonable steps to prevent and minimize any sludge use or disposal in violation of this Order that may adversely affect human health or the environment.

vi. Solids and sludge treatment and storage shall not create a nuisance, such as objectionable odors or flies, and shall not result in groundwater contamination.

vii. Solids and sludge treatment and storage sites shall have facilities adequate to divert surface water runoff from adjacent areas, to protect the boundaries of the site from erosion, and to prevent drainage from the treatment and storage site. Adequate protection is defined as protection from a design storm with a 100-year recurrence interval and 24-hour duration.

viii. The discharge of sewage sludge and solids shall not cause waste material to be in a position where it is, or can be, conveyed from the treatment and storage sites and deposited in the waters of the State.

d. Biosolids Management

For the discharge of biosolids from the Subregional System, the Permittee shall comply with the following requirements:

i. For the land application of biosolids as soil amendment within the North Coast Region, the Permittee shall obtain or maintain coverage under the State Water Board Water Quality Order No. 2004-0012-DWQ General Waste Discharge Requirements for the Discharge of Biosolids to Land or Use as a Soil Amendment in Agricultural, Silvicultural, Horticultural, and Land Reclamation Activities; or

ii. Alternatively, the Permittee may dispose of biosolids at another appropriately permitted facility.

iii. New sludge treatment and storage facilities must comply with the requirements of the Water Code and title 27, CCR, for the protection of water quality.

e. Operator Certification

Supervisors and operators of municipal WWTFs shall possess a certificate of appropriate grade in accordance with title 23, CCR, section 3680. The State Water Board may accept experience in lieu of qualification training. In lieu of a properly certified WWTF operator, the State Water Board may approve use of a water treatment facility operator of appropriate grade certified by CDPH where water reclamation is involved.

f. Adequate Capacity

If the Subregional System or effluent disposal areas will reach capacity within 4 years, the Permittee shall notify the Regional Water Board. A copy of such notification shall be sent to appropriate local elected officials, local permitting agencies, and the press. Factors to be evaluated in assessing reserve capacity shall include, at a minimum, (1) comparison of the wet weather design flow with the highest daily flow, and (2) comparison of the average dry weather design flow with the lowest 30-day flow. The Permittee shall demonstrate that adequate steps are being taken to address the capacity problem. The Permittee shall submit a technical report to the Regional Water Board showing how flow volumes will be prevented from exceeding capacity, or how capacity will be increased, within 120 days after providing notification to the Regional Water Board, or within 120 days after receipt of Regional Water Board notification, that the WWTF will reach capacity within four years. The time for filing the required technical report may

be extended by the Regional Water Board. An extension of 30 days may be granted by the Executive Officer, and longer extensions may be granted by the Regional Water Board itself.

6. Other Special Provisions

a. Capacity Increase Engineering Report. At such time that the Permittee makes improvements or other changes that increase the treatment and/or total reclamation capacity, the Permittee shall submit to CDPH and the Regional Water Board an updated Recycled Water Engineering report, prepared in accordance with title 22, documenting that treatment and/or total reclamation capacity has been added. This report shall document that the Permittee exceeds the total reclamation capacity of 4,015 million gallons for Geysers recharge, and maintains the capability to irrigate at least 2,590 million gallons per year at 21.34 mgd ADWF. The Executive Officer will inform the Permittee within 90 days after receipt of the report that the additional capacity is recognized by the Regional Water Board.

b. Storm Water. For the control of storm water discharge from the Subregional System, the Permittee shall seek separate authorization to discharge under the requirements of the State Water Board's Water Quality Order No. 97-03-DWQ, NPDES General Permit No. CAS000001, Waste Discharge Requirements for Discharges of Storm Water Associated with Industrial Activities Excluding Construction Activities (or subsequent renewed versions of NPDES General Permit CAS000001), which is not incorporated by reference in this Order.

7. Compliance Schedules– Not Applicable

This section is not applicable to the Permittee.

VII. COMPLIANCE DETERMINATION

Compliance with the effluent limitations contained in section IV of this Order will be determined as specified below.

A. General

Compliance with effluent limitations for priority pollutants shall be determined using sample reporting protocols defined in the MRP of this Order. For purposes of reporting and administrative enforcement by the Regional and State Water Boards, the Permittee shall be deemed out of compliance with effluent limitations if the concentration of the priority pollutant in the monitoring sample is greater than the effluent limitation and greater than or equal to the reporting level (RL).

B. Multiple Sample Data

When determining compliance with an AMEL for priority pollutants, and more than one sample result is available, the Permittee shall compute the arithmetic mean unless the data set contains one or more reported determinations of "Detected, but Not Quantified" (DNQ) or "Not Detected" (ND). In those cases, the Permittee shall compute the median in place of the arithmetic mean in accordance with the following procedure.

1. The data set shall be ranked from low to high, ranking the reported ND determinations lowest, DNQ determinations next, followed by quantified values (if any). The order of the individual ND or DNQ determinations is unimportant.
2. The median value of the data set shall be determined. If the data set has an odd number of data points, then the median is the middle value. If the data set has an even number of data points, then the median is the average of the two values around the middle unless one or both of the points are ND or DNQ, in which case the median value shall be the lower of the two data points where DNQ is lower than a value and ND is lower than DNQ.

C. Bacteriological Limitations (Total Coliform)

1. Median. The median is the central tendency concentration of the pollutant. The data set shall be ranked from low to high, ranking the ND concentrations lowest, DNQ determinations next, followed by quantified values. The order of the individual ND and DNQ determinations is not important. The median value is determined based on the number of data points in the set. If the data set has an odd number of data points, then the median is the middle value. If the data set has an even number of data points, the median is the average of the two middle values, unless one or both points are ND or DNQ, in which case the median value shall be the lower of the two middle data points. DNQ is lower than a detected value, and ND is lower than DNQ.

2. Compliance with the 7-day median will be determined as a rolling median during periods when sampling occurs more frequently than weekly. During periods when sampling is weekly, this requirement shall apply to each weekly sample.

D. Average Monthly Effluent Limitation (AMEL)

If the average (or when applicable, the median determined by subsection B above for multiple sample data) of daily discharges over a calendar month exceeds the AMEL for a given parameter, this will represent a single violation, though the Permittee will be considered out of compliance for each day of that month for that parameter (e.g., resulting in 31 days of non-compliance in a 31-day month). If only a single sample is taken during the calendar month and the analytical result for that sample exceeds the

AMEL, the Permittee will be considered out of compliance for that calendar month. The Permittee will only be considered out of compliance for days when the discharge occurs. For any one calendar month during which no sample (daily discharge) is taken, no compliance determination can be made for that calendar month.

E. Average Weekly Effluent Limitation (AWEL)

If the average (or when applicable, the median determined by subsection B above for multiple sample data) of daily discharges over a calendar week (Sunday to Saturday) exceeds the AWEL for a given parameter, this will represent a single violation, though the Permittee will be considered out of compliance for each day of that week for that parameter, resulting in 7 days of non-compliance. If only a single sample is taken during the calendar week and the analytical result for that sample exceeds the AWEL, the Permittee will be considered out of compliance for that calendar week. The Permittee will only be considered out of compliance for days when the discharge occurs. For any one calendar week during which no sample (daily discharge) is taken, no compliance determination can be made for that calendar week.

F. Maximum Daily Effluent Limitation (MDEL)

If a daily discharge (or when applicable, the median determined by subsection B, above, for multiple sample data of a daily discharge) exceeds the MDEL for a given parameter, the Permittee will be considered out of compliance for that parameter for that 1 day only within the reporting period. For any 1 day during which no sample is taken, no compliance determination can be made for that day.

G. Instantaneous Minimum Effluent Limitation

If the analytical result of a single grab sample is lower than the instantaneous minimum effluent limitation for a parameter, the Permittee will be considered out of compliance for that parameter for that single sample. Non-compliance for each sample will be considered separately (e.g., the results of two grab samples taken within a calendar day that both are lower than the instantaneous minimum effluent limitation would result in two instances of non-compliance with the instantaneous minimum effluent limitation).

If the Permittee monitors pH continuously, pursuant to 40 CFR 401.17, the Permittee shall be in compliance with the pH limitation specified herein provided that both of the following conditions are satisfied: (1) the total time during which the pH values are outside the required range of pH values shall not exceed 7 hours and 26 minutes in any calendar month; and (2) no individual excursion from the range of pH values shall exceed 60 minutes.

H. Instantaneous Maximum Effluent Limitation

If the analytical result of a single grab sample is higher than the instantaneous maximum effluent limitation for a parameter, the Permittee will be considered out of compliance for that parameter for that single sample. Non-compliance for each sample will be considered separately (e.g., the results of two grab samples taken within a calendar day that both exceed the instantaneous maximum effluent limitation would result in two instances of non-compliance with the instantaneous maximum effluent limitation).

If the Permittee monitors pH continuously, pursuant to 40 CFR 401.17, the Permittee shall be in compliance with the pH limitation specified herein provided that both of the following conditions are satisfied: (1) the total time during which the pH values are outside the required range of pH values shall not exceed 7 hours and 26 minutes in any calendar month; and (2) no individual excursion from the range of pH values shall exceed 60 minutes.

I. Mass-Based Effluent Limitations

This Order does not include mass-based effluent limitations.

J. Receiving Water Objectives

Compliance with the surface water limitations for dissolved oxygen, pH, turbidity, and temperature for the discharge from Discharge Point 012B (Delta Pond) shall be determined at RSW-012BD-S (formerly RSW-018) as specified below:

1. The Permittee shall monitor flow, dissolved oxygen, turbidity, pH, and temperature in effluent and upstream receiving waters and use this information to modulate each day (or more frequently if receiving water conditions are variable) the amount of discharge such that receiving water quality objectives in Section V of this Order are not exceeded at RSW-012BD-S, the edge of the Zone of Initial Dilution, as determined according to the model incorporated into and described in the Laguna Subregional Water Reclamation System Receiving Water Quality Limit Compliance Assurance and Monitoring Plan.

Note: The Zone of Initial Dilution (ZID) applies only to compliance with receiving water quality objectives for dissolved oxygen, pH, turbidity, and temperature at Discharge Point 012B. The ZID concept was not used for determining reasonable potential or establishing water quality-based effluent limitations (WQBELs) for priority pollutants or water quality objectives other than dissolved oxygen, pH, turbidity, and temperature.

K. Acute Toxicity Limitation.

Compliance with this effluent limitation shall be determined at each monitoring location when there is a discharge, by calculating the median percent survival of the three most recent consecutive samples meeting all test acceptability criteria. All effluent samples shall be collected and analyzed in accordance with methods described in section V.A the MRP.

L. Chronic Toxicity Triggers

1. When a single chronic toxicity test result is available in a monthly monitoring period, the need for accelerated monitoring will be determined by comparing the single result to the monthly median chronic toxicity trigger of 1.0 TUc.

2. If two or more chronic toxicity test results are available in a monthly monitoring period, the need for accelerated monitoring will be determined by calculating the median of the test results and comparing the calculated median to the monthly median chronic toxicity trigger of 1.0 TUc, and the individual sample results will be compared to the single sample chronic toxicity trigger of 1.6 TUc. If the first monthly chronic toxicity result is greater than 1.0 TUc, a minimum of three chronic toxicity test results would be needed to determine the need for accelerated monitoring based on the monthly median chronic toxicity trigger of 1.0 TUc.

M. Mean Daily Dry Weather Flow

1. Compliance with the mean daily dry weather flow prohibition in section III.H of this Order will be determined by evaluating all flow data collected in a calendar year. The lowest 30 day period of flow must be 21.34 MGD or less (prior to adding storage and reclamation capacity to handle higher), or a higher ADWF up to 25.9 MGD upon concurrence by the Regional Water Board Executive Officer that the Permittee has treatment, storage and/or reclamation capacity to accommodate the full average dry weather design capacity.

N. Water Quality-Based Effluent Limitation for Total Phosphorus

1. For each discharge season (i.e., October 1st through May 14th), the Permittee shall calculate the mass of total phosphorus discharged to the Laguna de Santa Rosa (and tributaries) from the Subregional System and the mass of total phosphorus that was controlled during the same season through approved nutrient offset projects. If the mass discharged is equal to or less than the mass controlled, then the Permittee shall be deemed in compliance with the effluent limitation in IV.A.2.b.i.

2. If the mass discharged is greater than the mass controlled, then the Permittee may use nutrient offset credits generated via the Regional Water Board Resolution No. R1-2008-0061 approving the Santa Rosa Nutrient Offset Program (Attachment H), as follows:

a. For each discharge season, the Permittee shall calculate the mass of total phosphorus discharged in excess of the mass of total phosphorus controlled during the same discharge season through approved nutrient offset projects.

b. The Permittee shall calculate the three-year average mass of total phosphorus discharged in excess of the mass controlled using the discharges (mass basis) that occurred during the previous three discharge seasons.

c. The Permittee will compare the three-year average mass of total phosphorus discharged in excess of the mass of total phosphorus controlled during the previous three discharge seasons.

d. The Permittee will be determined to be in compliance with the effluent limitation in IV.A.2.b.i if the total phosphorus controlled for the previous three years is greater than or equal to the three-year average of total phosphorus discharged.

3. The Permittee shall document compliance with the effluent limitations in an annual report, submitted to the Regional Water Board by July 1st of each year.

ATTACHMENT A – DEFINITIONS

Arithmetic Mean (μ): also called the average, is the sum of measured values divided by the number of samples. For ambient water concentrations, the arithmetic mean is calculated as follows:

Arithmetic mean = $\mu = \Sigma x / n$ where: Σx is the sum of the measured ambient water concentrations, and n is the number of samples.

Average Monthly Effluent Limitation (AMEL): the highest allowable average of daily discharges over a calendar month, calculated as the sum of all daily discharges measured during a calendar month divided by the number of daily discharges measured during that month.

Average Weekly Effluent Limitation (AWEL): the highest allowable average of daily discharges over a calendar week (Sunday through Saturday), calculated as the sum of all daily discharges measured during a calendar week divided by the number of daily discharges measured during that week.

Bioaccumulative Pollutants: substances taken up by an organism from its surrounding medium through gill membranes, epithelial tissue, or from food and subsequently concentrated and retained in the body of the organism.

Carcinogenic Pollutants: substances that are known to cause cancer in living organisms.

Coefficient of Variation (CV): a measure of the data variability and is calculated as the estimated standard deviation divided by the arithmetic mean of the observed values.

Daily Discharge: Daily Discharge is defined as either: (1) the total mass of the constituent discharged over the calendar day (12:00 am through 11:59 pm) or any 24-hour period that reasonably represents a calendar day for purposes of sampling (as specified in the permit), for a constituent with limitations expressed in units of mass; or (2) the unweighted arithmetic mean measurement of the constituent over the day for a constituent with limitations expressed in other units of measurement (e.g., concentration).

The daily discharge may be determined by the analytical results of a composite sample taken over the course of one day (a calendar day or other 24-hour period defined as a day) or by the arithmetic mean of analytical results from one or more grab samples taken over the course of the day.

For composite sampling, if 1 day is defined as a 24-hour period other than a calendar day, the analytical result for the 24-hour period will be considered as the result for the calendar day in which the 24-hour period ends.

Detected, but Not Quantified (DNQ): sample results less than the RL, but greater than or equal to the laboratory's MDL.

Dilution Credit: the amount of dilution granted to a discharge in the calculation of a water quality-based effluent limitation, based on the allowance of a specified mixing zone. It is calculated from the dilution ratio or determined through conducting a mixing zone study or modeling of the discharge and receiving water.

Effective Concentration (EC): a point estimate of the toxicant concentration that would cause an adverse effect on a quantal, "all or nothing," response (such as death, immobilization, or serious incapacitation) in a given percent of the test organisms. If the effect is death or immobility, the term lethal concentration (LC) may be used. EC values may be calculated using point estimation techniques such as probit, logit, and Spearman-Karber. EC25 is the concentration of toxicant (in percent effluent) that causes a response in 25 percent of the test organisms.

Effluent Concentration Allowance (ECA): a value derived from the water quality criterion/objective, dilution credit, and ambient background concentration that is used, in conjunction with the coefficient of variation for the effluent monitoring data, to calculate a long-term average (LTA) discharge concentration. The ECA has the same meaning as waste load allocation (WLA) as used in USEPA guidance (Technical Support Document For Water Quality-based Toxics Control, March 1991, second printing, EPA/505/2-90-001).

Enclosed Bays: indentations along the coast that enclose an area of oceanic water within distinct headlands or harbor works. Enclosed bays include all bays where the narrowest distance between the headlands or outermost harbor works is less than 75 percent of the greatest dimension of the enclosed portion of the bay. Enclosed bays include, but are not limited to, Humboldt Bay, Bodega Harbor, Tomales Bay, Drake's Estero, San Francisco Bay, Morro Bay, Los Angeles-Long Beach Harbor, Upper and Lower Newport Bay, Mission Bay, and San Diego Bay. Enclosed bays do not include inland surface waters or ocean waters.

Estimated Chemical Concentration: the estimated chemical concentration that results from the confirmed detection of the substance by the analytical method below the ML value.

Estuaries: waters, including coastal lagoons, located at the mouths of streams that serve as areas of mixing for fresh and ocean waters. Coastal lagoons and mouths of streams that are temporarily separated from the ocean by sandbars shall be considered estuaries. Estuarine waters shall be considered to extend from a bay or the open ocean to a point upstream where there is no significant mixing of fresh water and seawater. Estuarine waters included, but are not limited to, the Sacramento-San Joaquin Delta, as defined in Water Code section 12220, Suisun Bay, Carquinez Strait downstream to the Carquinez Bridge, and appropriate areas of the Smith, Mad, Eel, Noyo, Russian, Klamath, San Diego, and Otay rivers. Estuaries do not include inland surface waters or ocean waters.

Inhibition Concentration (IC): the IC25 is typically calculated as a percentage of effluent. It is the level at which the organisms exhibit 25 percent reduction in biological measurement such as reproduction or growth. It is calculated statistically and used in chronic toxicity testing.

Inland Surface Waters: all surface waters of the State that do not include the ocean, enclosed bays, or estuaries.

Instantaneous Maximum Effluent Limitation: the highest allowable value for any single grab sample or aliquot (i.e., each grab sample or aliquot is independently compared to the instantaneous maximum limitation).

Instantaneous Minimum Effluent Limitation: the lowest allowable value for any single grab sample or aliquot (i.e., each grab sample or aliquot is independently compared to the instantaneous minimum limitation).

Maximum Daily Effluent Limitation (MDEL): the highest allowable daily discharge of a pollutant, over a calendar day (or 24-hour period). For pollutants with limitations expressed in units of mass, the daily discharge is calculated as the total mass of the pollutant discharged over the day. For pollutants with limitations expressed in other units of measurement, the daily discharge is calculated as the arithmetic mean measurement of the pollutant over the day.

Median: the middle measurement in a set of data. The median of a set of data is found by first arranging the measurements in order of magnitude (either increasing or decreasing order). If the number of measurements (n) is odd, then the median = $X_{(n+1)/2}$. If n is even, then the median = $(X_{n/2} + X_{(n/2)+1})/2$ (i.e., the midpoint between the $n/2$ and $n/2+1$).

Method Detection Limit (MDL): the minimum concentration of a substance that can be measured and reported with 99 percent confidence that the analyte concentration is greater than zero, as defined in title 40 of the Code of Federal Regulations, Part 136, Attachment B, revised as of July 3, 1999.

Minimum Level (ML): the concentration at which the entire analytical system must give a recognizable signal and acceptable calibration point. The ML is the concentration in a sample that is equivalent to the concentration of the lowest calibration standard analyzed by a specific analytical procedure, assuming that all the method specified sample weights, volumes, and processing steps have been followed.

Mixing Zone: a limited volume of receiving water that is allocated for mixing with a wastewater discharge where water quality criteria can be exceeded without causing adverse effects to the overall water body.

Not Detected (ND): those sample results less than the laboratory's MDL.

Ocean Waters: the territorial marine waters of the State as defined by California law to the extent these waters are outside of enclosed bays, estuaries, and coastal lagoons. Discharges to ocean waters are regulated in accordance with the State Water Board's California Ocean Plan.

Persistent Pollutants: substances for which degradation or decomposition in the environment is nonexistent or very slow.

Pollutant Minimization Program (PMP): waste minimization and pollution prevention actions that include, but are not limited to, product substitution, waste stream recycling, alternative waste

management methods, and education of the public and businesses. The goal of the PMP shall be to reduce all potential sources of a priority pollutant(s) through pollutant minimization (control) strategies, including pollution prevention measures as appropriate, to maintain the effluent concentration at or below the water quality-based effluent limitation. Pollution prevention measures may be particularly appropriate for persistent bioaccumulative priority pollutants where there is evidence that beneficial uses are being impacted. The Regional Water Board may consider cost effectiveness when establishing the requirements of a PMP. The completion and implementation of a Pollution Prevention Plan, if required pursuant to Water Code section 13263.3(d), shall be considered to fulfill the PMP requirements.

Pollution Prevention: any action that causes a net reduction in the use or generation of a hazardous substance or other pollutant that is discharged into water and includes, but is not limited to, input change, operational improvement, production process change, and product reformulation (as defined in Water Code section 13263.3). Pollution prevention does not include actions that merely shift a pollutant in wastewater from one environmental medium to another environmental medium, unless clear environmental benefits of such an approach are identified to the satisfaction of the State or Regional Water Board.

Publicly Owned Treatment Works (POTW): a treatment works as defined in section 212 of the Clean Water Act (CWA), which is owned by a State or municipality as defined by section 502(4) of the CWA. [Section 502(4) of the CWA defines a municipality as a city, town, borough, county, parish, district, association, or other public body created by or pursuant to State law and having jurisdiction over disposal of sewage, industrial wastes, or other wastes). This definition includes any devices and systems used in the storage, treatment, recycling, and reclamation of municipal sewage or industrial wastes of a liquid nature. It also includes sewers, pipes and other conveyances only if they convey wastewater to a POTW Treatment Plant. The term also means the municipality as defined in section 502(4) of the Clean Water Act, which has jurisdiction over the Indirect Discharges to and the discharges from such a treatment works.

Reporting Level (RL): the ML (and its associated analytical method) used for reporting and compliance determination. The MLs included in this Order correspond to approved analytical methods for reporting a sample result that are selected by the Regional Water Board either from Appendix 4 of the SIP in accordance with section 2.4.2 of the SIP or established in accordance with section 2.4.3 of the SIP. The ML is based on the proper application of method-based analytical procedures for sample preparation and the absence of any matrix interferences. Other factors may be applied to the ML depending on the specific sample preparation steps employed. For example, the treatment typically applied in cases where there are matrix-effects is to dilute the sample or sample aliquot by a factor of ten. In such cases, this additional factor must be applied to the ML in the computation of the RL.

Satellite Collection System: the portion, if any, of a sanitary sewer system owned or operated by a different public agency than the agency that owns and operates the wastewater treatment facility that a sanitary sewer system is tributary to.

Source of Drinking Water: any water designated as municipal or domestic supply (MUN) in a Regional Water Board Basin Plan.

Standard Deviation (σ): a measure of variability that is calculated as follows:

$$\sigma = (\sum[(x - \mu)^2]/(n - 1))^{0.5}$$

where:

x is the observed value;

μ is the arithmetic mean of the observed values; and

n is the number of samples.

Toxicity Reduction Evaluation (TRE): a study conducted in a step-wise process designed to identify the causative agents of effluent or ambient toxicity, isolate the sources of toxicity, evaluate the effectiveness of toxicity control options, and then confirm the reduction in toxicity. The first steps of the TRE consist of the collection of data relevant to the toxicity, including additional toxicity testing, and an evaluation of facility operations and maintenance practices, and best management practices. A Toxicity Identification Evaluation (TIE) may be required as part of the TRE, if appropriate. (A TIE is a set of procedures to identify the specific chemical(s) responsible for toxicity. These procedures are performed in three phases (characterization, identification, and confirmation) using aquatic organism toxicity tests.)

ATTACHMENT B – MAP OF SANTA ROSA SUBREGIONAL WATER RECLAMATION SYSTEM

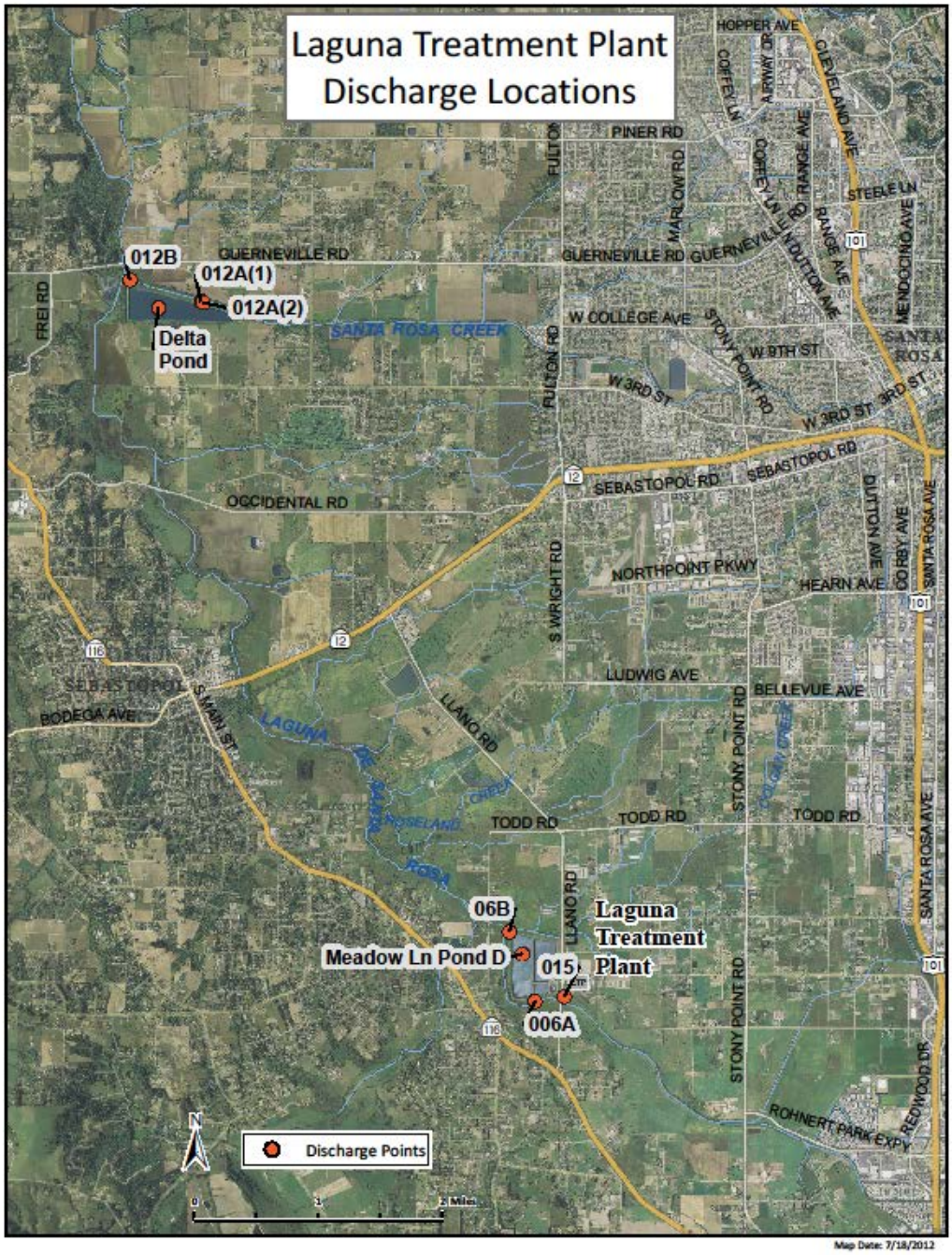

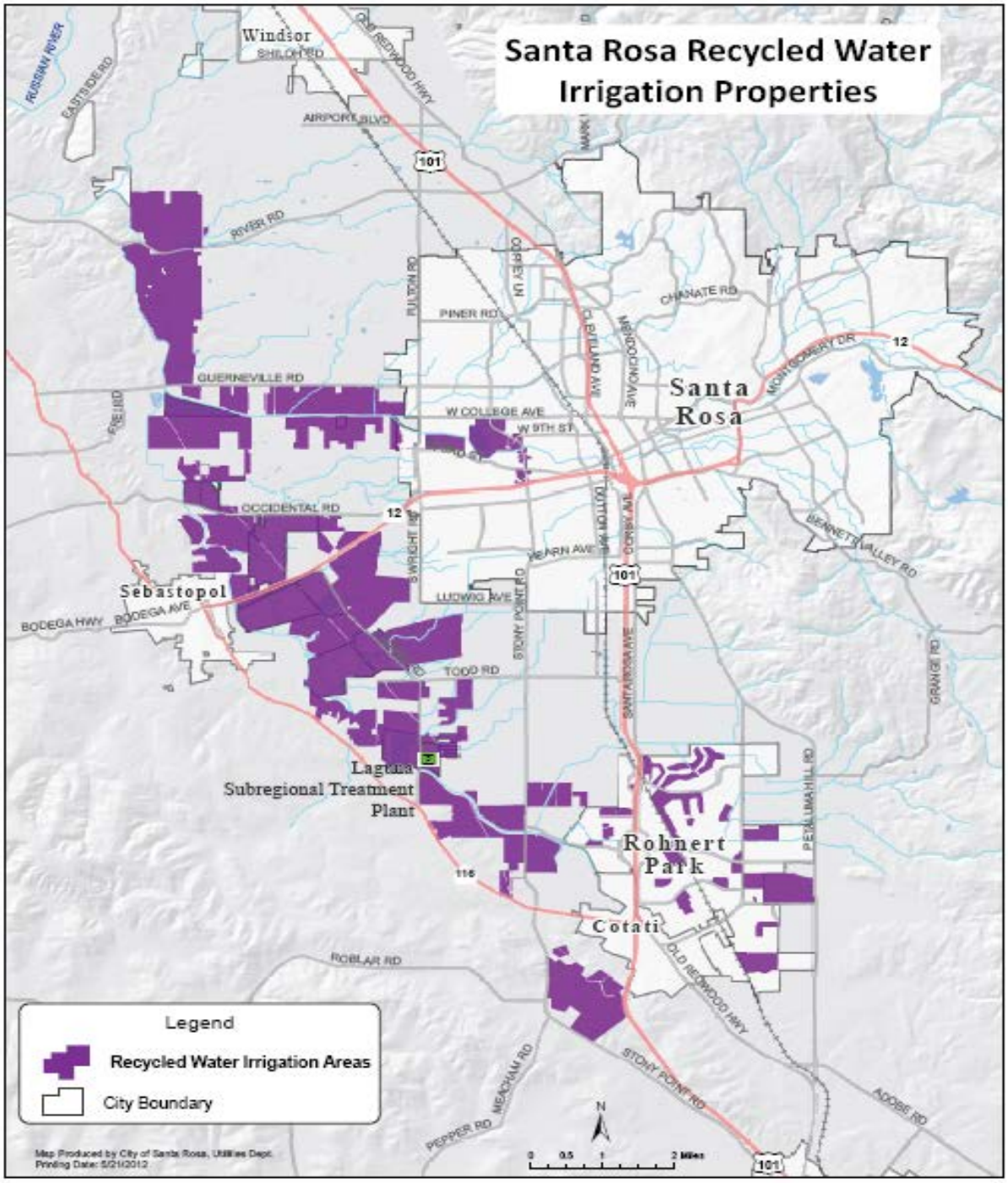
Santa Rosa Recycled Water Irrigation Properties
Windsor
Santa Rosa
Sebastopol
Laguna Subregional Treatment Plant
Rohnert Park
Cotati
Legend
Recycled Water Irrigation Areas
City Boundary
Map Produced by City of Santa Rosa, Utilities Dept.
Printing Date: 5/21/2012
N
0 0.5 1 2 Miles

ATTACHMENT C – FACILITY FLOW SCHEMATIC

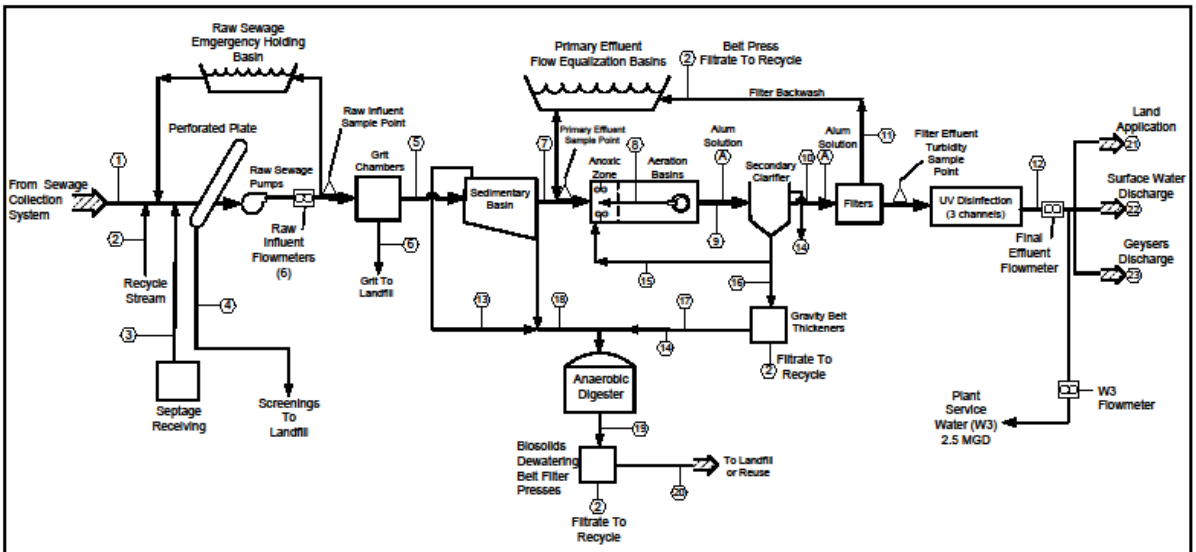

	Stream Identification	Daily Average Flow 2010 (MGD)
1	Raw Sewage	20.6
2	Recycle Stream	1
3	Septage	0.03
4	Screenings	1.5
5	Primary Influent	20.6
6	Grit	13 FT^3/Day
7	Primary Effluent	20.6
8	Mixed Liquor Recycle	20.6
9	Aeration Basin Effluent	30.1
10	Secondary Effluent	20.6
11	Filter Backwash	1
12	Plant Effluent	20.6

	Stream Identification	Daily Average Flow 2010 (MGD)
13	Primary Scum	4600 GPD
14	Secondary Scum	1900 GPD
15	Recycled Activated Sludge	9.5
16	Waste Activated Sludge (WAS)	0.42
17	Thickened WAS	0.09
18	Primary Sludge	0.11
19	Digested Sludge	0.14
20	Dewatered Sludge	0.03
21	Land Application	5.3
22	Surface Water Discharge	20 Days @ 21 MGD
23	Geysers Discharge	12.62
A	Alum Solution	Standby

LAGUNA SUBREGIONAL RECLAMATION FACILITY ADVANCED TREATMENT	General PROCESS MASS BALANCE AND RECYCLE DIAGRAM	Page: Doc: LTP_process.vsd Date: July 2012

ATTACHMENT D – STANDARD PROVISIONS

I. STANDARD PROVISIONS – PERMIT COMPLIANCE

A. Duty to Comply

1. The Permittee must comply with all of the conditions of this Order. Any noncompliance constitutes a violation of the Clean Water Act (CWA) and the California Water Code and is grounds for enforcement action, for permit termination, revocation and reissuance, or modification; or denial of a permit renewal application. (40 CFR § 122.41(a).)

2. The Permittee shall comply with effluent standards or prohibitions established under Section 307(a) of the CWA for toxic pollutants and with standards for sewage sludge use or disposal established under Section 405(d) of the CWA within the time provided in the regulations that establish these standards or prohibitions, even if this Order has not yet been modified to incorporate the requirement. (40 CFR § 122.41(a)(1).)

B. Need to Halt or Reduce Activity Not a Defense

It shall not be a defense for a Permittee in an enforcement action that it would have been necessary to halt or reduce the permitted activity in order to maintain compliance with the conditions of this Order. (40 CFR § 122.41(c).)

C. Duty to Mitigate

The Permittee shall take all reasonable steps to minimize or prevent any discharge or sludge use or disposal in violation of this Order that has a reasonable likelihood of adversely affecting human health or the environment. (40 CFR. § 122.41(d).)

D. Proper Operation and Maintenance

The Permittee shall at all times properly operate and maintain all facilities and systems of treatment and control (and related appurtenances) which are installed or used by the Permittee to achieve compliance with the conditions of this Order. Proper operation and maintenance also includes adequate laboratory controls and appropriate quality assurance procedures. This provision requires the operation of backup or auxiliary facilities or similar systems that are installed by a Permittee only when necessary to achieve compliance with the conditions of this Order. (40 CFR § 122.41(e).)

E. Property Rights

1. This Order does not convey any property rights of any sort or any exclusive privileges. (40 CFR § 122.41(g).)

2. The issuance of this Order does not authorize any injury to persons or property or invasion of other private rights, or any infringement of state or local law or regulations. (40 CFR § 122.5(c).)

F. Inspection and Entry

The Permittee shall allow the Regional Water Board, State Water Board, United States Environmental Protection Agency (USEPA), and/or their authorized representatives (including an authorized contractor acting as their representative), upon the presentation of credentials and other documents, as may be required by law, to (40 CFR § 122.41(i); Wat. Code, § 13383):

1. Enter upon the Permittee's premises where a regulated facility or activity is located or conducted, or where records are kept under the conditions of this Order (40 CFR § 122.41(i)(1));

2. Have access to and copy, at reasonable times, any records that must be kept under the conditions of this Order (40 CFR § 122.41(i)(2));

3. Inspect and photograph, at reasonable times, any facilities, equipment (including monitoring and control equipment), practices, or operations regulated or required under this Order (40 CFR § 122.41(i)(3)); and

4. Sample or monitor, at reasonable times, for the purposes of assuring Order compliance or as otherwise authorized by the CWA or the Water Code, any substances or parameters at any location. (40 CFR § 122.41(i)(4).)

G. Bypass

1. Definitions

   a. "Bypass" means the intentional diversion of waste streams from any portion of a treatment facility. (40 CFR § 122.41(m)(1)(i).)

   b. "Severe property damage" means substantial physical damage to property, damage to the treatment facilities, which causes them to become inoperable, or substantial and permanent loss of natural resources that can reasonably be

expected to occur in the absence of a bypass. Severe property damage does not mean economic loss caused by delays in production. (40 CFR § 122.41(m)(1)(ii).)

2. Bypass not exceeding limitations. The Permittee may allow any bypass to occur which does not cause exceedances of effluent limitations, but only if it is for essential maintenance to assure efficient operation. These bypasses are not subject to the provisions listed in Standard Provisions – Permit Compliance I.G.3, I.G.4, and I.G.5 below. (40 CFR § 122.41(m)(2).)

3. Prohibition of bypass. Bypass is prohibited, and the Regional Water Board may take enforcement action against a Permittee for bypass, unless (40 CFR § 122.41(m)(4)(i)):

a. Bypass was unavoidable to prevent loss of life, personal injury, or severe property damage (40 CFR § 122.41(m)(4)(i)(A));

b. There were no feasible alternatives to the bypass, such as the use of auxiliary treatment facilities, retention of untreated wastes, or maintenance during normal periods of equipment downtime. This condition is not satisfied if adequate back-up equipment should have been installed in the exercise of reasonable engineering judgment to prevent a bypass that occurred during normal periods of equipment downtime or preventive maintenance (40 CFR § 122.41(m)(4)(i)(B)); and

c. The Permittee submitted notice to the Regional Water Board as required under Standard Provisions – Permit Compliance I.G.6 below. (40 CFR § 122.41(m)(4)(i)(C).)

4. Burden of Proof. In any enforcement proceeding, the Permittee seeking to establish the bypass defense has the burden of proof.

5. The Regional Water Board may approve an anticipated bypass, after considering its adverse effects, if the Regional Water Board determines that it will meet the three conditions listed in Standard Provisions – Permit Compliance I.G.3 above. (40 CFR § 122.41(m)(4)(ii).)

6. Notice

a. Anticipated bypass. If the Permittee knows in advance of the need for a bypass, it shall submit a notice, if possible at least 10 days before the date of the bypass. (40 CFR § 122.41(m)(3)(i).)

b. Unanticipated bypass. The Permittee shall submit notice of an unanticipated bypass as required in Standard Provisions - Reporting V.E below (24-hour notice). (40 CFR § 122.41(m)(3)(ii).)

H. Upset

Upset means an exceptional incident in which there is unintentional and temporary noncompliance with technology based permit effluent limitations because of factors beyond the reasonable control of the Permittee. An upset does not include noncompliance to the extent caused by operational error, improperly designed treatment facilities, inadequate treatment facilities, lack of preventive maintenance, or careless or improper operation. (40 CFR § 122.41(n)(1).)

1. Effect of an upset. An upset constitutes an affirmative defense to an action brought for noncompliance with such technology based permit effluent limitations if the requirements of Standard Provisions – Permit Compliance I.H.2 below are met. No determination made during administrative review of claims that noncompliance was caused by upset, and before an action for noncompliance, is final administrative action subject to judicial review. (40 CFR § 122.41(n)(2).)

2. Conditions necessary for a demonstration of upset. A Permittee who wishes to establish the affirmative defense of upset shall demonstrate, through properly signed, contemporaneous operating logs or other relevant evidence that (40 CFR § 122.41(n)(3)):

a. An upset occurred and that the Permittee can identify the cause(s) of the upset (40 CFR § 122.41(n)(3)(i));

b. The permitted facility was, at the time, being properly operated (40 CFR § 122.41(n)(3)(ii));

c. The Permittee submitted notice of the upset as required in Standard Provisions – Reporting V.E.2.b below (24-hour notice) (40 CFR § 122.41(n)(3)(iii)); and

d. The Permittee complied with any remedial measures required under Standard Provisions – Permit Compliance I.C above. (40 CFR § 122.41(n)(3)(iv).)

3. Burden of proof. In any enforcement proceeding, the Permittee seeking to establish the occurrence of an upset has the burden of proof. (40 CFR § 122.41(n)(4).)

II. STANDARD PROVISIONS – PERMIT ACTION

A. General

This Order may be modified, revoked and reissued, or terminated for cause. The filing of a request by the Permittee for modification, revocation and reissuance, or termination, or

a notification of planned changes or anticipated noncompliance does not stay any Order condition. (40 CFR § 122.41(f).)

B. Duty to Reapply

If the Permittee wishes to continue an activity regulated by this Order after the expiration date of this Order, the Permittee must apply for and obtain a new permit. (40 CFR § 122.41(b).)

C. Transfers

This Order is not transferable to any person except after notice to the Regional Water Board. The Regional Water Board may require modification or revocation and reissuance of this Order to change the name of the Permittee and incorporate such other requirements as may be necessary under the CWA and the Water Code. (40 CFR § 122.41(l)(3); § 122.61.)

III. STANDARD PROVISIONS – MONITORING

A. Samples and measurements taken for the purpose of monitoring shall be representative of the monitored activity. (40 CFR § 122.41(j)(1).)

B. Monitoring results must be conducted according to test procedures under Part 136 or, in the case of sludge use or disposal, approved under Part 136 unless otherwise specified in Part 503 unless other test procedures have been specified in this Order. (40 CFR § 122.41(j)(4); § 122.44(i)(1)(iv).)

IV. STANDARD PROVISIONS – RECORDS

A. Except for records of monitoring information required by this Order related to the Permittee's sewage sludge use and disposal activities, which shall be retained for a period of at least five years (or longer as required by Part 503), the Permittee shall retain records of all monitoring information, including all calibration and maintenance records and all original strip chart recordings for continuous monitoring instrumentation, copies of all reports required by this Order, and records of all data used to complete the application for this Order, for a period of at least three (3) years from the date of the sample, measurement, report or application. This period may be extended by request of the Regional Water Board Executive Officer at any time. (40 CFR § 122.41(j)(2).)

B. Records of monitoring information shall include:

1. The date, exact place, and time of sampling or measurements (40 CFR § 122.41(j)(3)(i));

2. The individual(s) who performed the sampling or measurements (40 CFR § 122.41(j)(3)(ii));

3. The date(s) analyses were performed (40 CFR § 122.41(j)(3)(iii));

4. The individual(s) who performed the analyses (40 CFR § 122.41(j)(3)(iv));

5. The analytical techniques or methods used (40 CFR § 122.41(j)(3)(v)); and

6. The results of such analyses. (40 CFR § 122.41(j)(3)(vi).)

C. Claims of confidentiality for the following information will be denied (40 CFR § 122.7(b)):

1. The name and address of any permit applicant or Permittee (40 CFR § 122.7(b)(1)); and

2. Permit applications and attachments, permits and effluent data. (40 CFR § 122.7(b)(2).)

V. STANDARD PROVISIONS – REPORTING

A. Duty to Provide Information

The Permittee shall furnish to the Regional Water Board, State Water Board, or USEPA within a reasonable time, any information which the Regional Water Board, State Water Board, or USEPA may request to determine whether cause exists for modifying, revoking and reissuing, or terminating this Order or to determine compliance with this Order. Upon request, the Permittee shall also furnish to the Regional Water Board, State Water Board, or USEPA copies of records required to be kept by this Order. (40 CFR § 122.41(h); Wat. Code, § 13267.)

B. Signatory and Certification Requirements

1. All applications, reports, or information submitted to the Regional Water Board, State Water Board, and/or USEPA shall be signed and certified in accordance with Standard Provisions – Reporting V.B.2, V.B.3, V.B.4, and V.B.5 below. (40 CFR § 122.41(k).)

2. All permit applications shall be signed by either a principal executive officer or ranking elected official. For purposes of this provision, a principal executive officer of a federal agency includes: (i) the chief executive officer of the agency, or (ii) a senior executive officer having responsibility for the overall operations of a principal geographic unit of the agency (e.g., Regional Administrators of USEPA). (40 CFR § 122.22(a)(3).).

3. All reports required by this Order and other information requested by the Regional Water Board, State Water Board, or USEPA shall be signed by a person described in Standard Provisions – Reporting V.B.2 above, or by a duly authorized representative of that person. A person is a duly authorized representative only if:

   a. The authorization is made in writing by a person described in Standard Provisions – Reporting V.B.2 above (40 CFR § 122.22(b)(1));

   b. The authorization specifies either an individual or a position having responsibility for the overall operation of the regulated facility or activity such as the position of plant manager, operator of a well or a well field, superintendent, position of equivalent responsibility, or an individual or position having overall responsibility for environmental matters for the company. (A duly authorized representative may thus be either a named individual or any individual occupying a named position.) (40 CFR § 122.22(b)(2)); and

   c. The written authorization is submitted to the Regional Water Board and State Water Board. (40 CFR § 122.22(b)(3).)

4. If an authorization under Standard Provisions – Reporting V.B.3 above is no longer accurate because a different individual or position has responsibility for the overall operation of the facility, a new authorization satisfying the requirements of Standard Provisions – Reporting V.B.3 above must be submitted to the Regional Water Board and State Water Board prior to or together with any reports, information, or applications, to be signed by an authorized representative. (40 CFR § 122.22(c).)

5. Any person signing a document under Standard Provisions – Reporting V.B.2 or V.B.3 above shall make the following certification:

   "I certify under penalty of law that this document and all attachments were prepared under my direction or supervision in accordance with a system designed to assure that qualified personnel properly gather and evaluate the information submitted. Based on my inquiry of the person or persons who manage the system or those persons directly responsible for gathering the information, the information submitted is, to the best of my knowledge and belief, true, accurate, and complete. I am aware that there are significant penalties for submitting false information, including the possibility of fine and imprisonment for knowing violations." (40 CFR § 122.22(d).)

C. Monitoring Reports

1. Monitoring results shall be reported at the intervals specified in the Monitoring and Reporting Program (Attachment E) in this Order. (40 CFR § 122.22(l)(4).)

2. Monitoring results must be reported on a Discharge Monitoring Report (DMR) form or forms provided or specified by the Regional Water Board or State Water Board for reporting results of monitoring of sludge use or disposal practices. (40 CFR § 122.41(l)(4)(i).)

3. If the Permittee monitors any pollutant more frequently than required by this Order using test procedures approved under Part 136 or, in the case of sludge use or disposal, approved under Part 136 unless otherwise specified in Part 503, or as specified in this Order, the results of this monitoring shall be included in the calculation and reporting of the data submitted in the DMR or sludge reporting form specified by the Regional Water Board. (40 CFR § 122.41(l)(4)(ii).)

4. Calculations for all limitations, which require averaging of measurements, shall utilize an arithmetic mean unless otherwise specified in this Order. (40 CFR § 122.41(l)(4)(iii).)

D. Compliance Schedules

Reports of compliance or noncompliance with, or any progress reports on, interim and final requirements contained in any compliance schedule of this Order, shall be submitted no later than 14 days following each schedule date. (40 CFR § 122.41(l)(5).)

E. Twenty-Four Hour Reporting

1. The Permittee shall report any noncompliance that may endanger health or the environment. Any information shall be provided orally within 24 hours from the time the Permittee becomes aware of the circumstances. A written submission shall also be provided within five (5) days of the time the Permittee becomes aware of the circumstances. The written submission shall contain a description of the noncompliance and its cause; the period of noncompliance, including exact dates and times, and if the noncompliance has not been corrected, the anticipated time it is expected to continue; and steps taken or planned to reduce, eliminate, and prevent reoccurrence of the noncompliance. (40 CFR § 122.41(l)(6)(i).)

2. The following shall be included as information that must be reported within 24 hours under this paragraph (40 CFR § 122.41(l)(6)(ii)):

   a. Any unanticipated bypass that exceeds any effluent limitation in this Order. (40 CFR § 122.41(l)(6)(ii)(A).)

   b. Any upset that exceeds any effluent limitation in this Order. (40 CFR § 122.41(l)(6)(ii)(B).)

c. Violation of a maximum daily discharge limitation for any of the pollutants listed in this Order to be reported within 24 hours [40 CFR § 122.41(l)(6)(ii)(C)]

3. The Regional Water Board may waive the above-required written report under this provision on a case-by-case basis if an oral report has been received within 24 hours. (40 CFR § 122.41(l)(6)(iii).)

F. Planned Changes

The Permittee shall give notice to the Regional Water Board as soon as possible of any planned physical alterations or additions to the permitted facility. Notice is required under this provision only when (40 CFR § 122.41(l)(1)):

1. The alteration or addition to a permitted facility may meet one of the criteria for determining whether a facility is a new source in section 122.29(b) (40 CFR § 122.41(l)(1)(i)); or

2. The alteration or addition could significantly change the nature or increase the quantity of pollutants discharged. This notification applies to pollutants that are not subject to effluent limitations in this Order. (40 CFR § 122.41(l)(1)(ii).)

3. The alteration or addition results in a significant change in the Permittee's sludge use or disposal practices, and such alteration, addition, or change may justify the application of permit conditions that are different from or absent in the existing permit, including notification of additional use or disposal sites not reported during the permit application process or not reported pursuant to an approved land application plan. (40 CFR § 122.41(l)(1)(iii).)

G. Anticipated Noncompliance

The Permittee shall give advance notice to the Regional Water Board or State Water Board of any planned changes in the permitted facility or activity that may result in noncompliance with General Order requirements. (40 CFR § 122.41(l)(2).)

H. Other Noncompliance

The Permittee shall report all instances of noncompliance not reported under Standard Provisions – Reporting V.C, V.D, and V.E above at the time monitoring reports are submitted. The reports shall contain the information listed in Standard Provision – Reporting V.E above. (40 CFR § 122.41(l)(7).)

I. Other Information

When the Permittee becomes aware that it failed to submit any relevant facts in a permit application, or submitted incorrect information in a permit application or in any report to the Regional Water Board, State Water Board, or USEPA, the Permittee shall promptly submit such facts or information. (40 CFR § 122.41(l)(8).)

VI. STANDARD PROVISIONS – ENFORCEMENT

A. The Regional Water Board is authorized to enforce the terms of this Order under several provisions of the Water Code, including, but not limited to, sections 13385, 13386, and 13387.

VII. ADDITIONAL PROVISIONS – NOTIFICATION LEVELS

A. Publicly-Owned Treatment Works (POTWs)

All POTWs shall provide adequate notice to the Regional Water Board of the following (40 CFR § 122.42(b)):

1. Any new introduction of pollutants into the POTW from an indirect discharger that would be subject to sections 301 or 306 of the CWA if it were directly discharging those pollutants (40 CFR § 122.42(b)(1)); and

2. Any substantial change in the volume or character of pollutants being introduced into that POTW by a source introducing pollutants into the POTW at the time of adoption of this Order. (40 CFR § 122.42(b)(2).)

3. Adequate notice shall include information on the quality and quantity of effluent introduced into the POTW as well as any anticipated impact of the change on the quantity or quality of effluent to be discharged from the POTW. (40 CFR § 122.42(b)(3).)

ATTACHMENT E – MONITORING AND REPORTING PROGRAM

Table of Contents

I. General Monitoring Provisions E-3
II. Monitoring Locations E-5
III. Influent Monitoring Requirements E-6
  A. Monitoring Location INF-001 ..... E-6
IV. Effluent Monitoring Requirements E-7
  A. Monitoring Location EFF-001 ..... E-7
  B. Monitoring Locations EFF-006A, EFF-006B, EFF-012A(2), and EFF-012B E-9
V. Whole Effluent Toxicity Testing Requirements E-11
  A. Acute Toxicity Testing E-11
  B. Chronic Toxicity Testing E-12
  C. Chronic Toxicity Reporting E-15
VI. Land Discharge Monitoring Requirements – Not applicable E-17
VII. Reclamation Monitoring Requirements E-17
  A. Recycled Water Monitoring E-17
  B. Recycled Water Production and Use E-19
VIII. Receiving Water Monitoring Requirements – Surface Water and Groundwater E-19
  A. Surface Water Monitoring Locations RSW-006AU, RSW-006BU-C, RSW-006BU-L, RSW-012AU, RSW-012BU, and RSW-015U E-19
  B. Groundwater Monitoring E-21
IX. Other Monitoring Requirements E-22
  A. Sludge Monitoring (Monitoring Location BIO-001) E-22
  B. Filtration Process Monitoring (Monitoring Locations INT-001A and INT-001B) E-22
  C. UV System Monitoring (Monitoring Location INT-002) E-23
X. Reporting Requirements E-24
  A. General Monitoring and Reporting Requirements E-24
  B. Self Monitoring Reports (SMRs) E-24
  C. Discharge Monitoring Reports (DMRs) E-27
  D. Other Reports E-28
  E. Spill Notification E-34

List of Tables

Table E-1. Test Methods and Minimum Levels for Priority Pollutants E-4
Table E-2. Monitoring Station Locations E-5
Table E-3. Influent Monitoring E-7
Table E-4. Effluent Monitoring for Discharges to 006A, 006B, 012A(2), and 012B E-7
Table E-5. Effluent Monitoring for Discharges to 012A(1) and 015 ..... E-8
Table E-6. Effluent Monitoring for Discharges to 006A, 006B, EFF-012A(2), and EFF-012B E-9
Table E-7. Reclamation Monitoring Requirements E-18
Table E-8. Recycled Water Production and Use E-19
Table E-9. Receiving Water Monitoring Requirements –RSW-006AU, RSW-006BU-C, RSW-006BU-L, RSW-012AU, RSW-012BU, and RSW-015U E-20
Table E-10. Receiving Water Monitoring Requirements – RSW-012BD-S E-21
Table E-11. Monitoring Periods and Reporting Schedule E-25

Attachment E – Monitoring and Reporting Program (MRP)

The Code of Federal Regulations at 40 CFR 122.48 requires that all NPDES permits specify monitoring and reporting requirements. California Water Code section 13383 also authorizes the Regional Water Board to require technical and monitoring reports. This MRP establishes monitoring and reporting requirements, which implement the federal and California regulations.

I. GENERAL MONITORING PROVISIONS

A. Wastewater Monitoring Provision. Composite samples may be taken by a proportional sampling device approved by the Executive Officer or by grab samples composited in proportion to flow. In compositing grab samples, the sampling interval shall not exceed one hour.

B. If the Permittee monitors any pollutant more frequently than required by this MRP, using test procedures approved by 40 CFR Part 136 or as specified in this MRP, the results of such monitoring shall be included in the calculation and reporting of the data submitted in the monthly and annual discharge monitoring reports.

C. Laboratories analyzing monitoring samples shall be certified by the CDPH in accordance with the provisions of Water Code section 13176, and must include quality assurance / quality control data with their analytical reports.

D. All monitoring instruments and devices used by the Permittee to fulfill the prescribed monitoring program shall be properly maintained and calibrated as necessary to ensure their continued accuracy. All flow measurement devices shall be calibrated no less than the manufacturer's recommended intervals or one year intervals, (whichever comes first) to ensure continued accuracy of the devices.

E. Compliance and reasonable potential monitoring analyses shall be conducted using commercially available and reasonably achievable detection limits that are lower than the applicable effluent limitation. If no Minimum Level (ML) value is below the effluent limitations, the lowest ML shall be selected as the Reporting Level (RL). Table E-1 lists the test methods the Permittee may use for compliance and reasonable potential monitoring to analyze priority pollutants with effluent limitations.

Table E-1. Test Methods and Minimum Levels for Priority Pollutants

CTR#	Constituent Types of Analytical Methods Minimum Levels (µg/L)	Types of Analytical Methods Minimum Levels (µg/L)				
		Gas Chromatography (GC)	Gas Chromatography/Mass Spectroscopy (GCMS)[1]	Colorimetric	Inductively Coupled Plasma/ Mass Spectroscopy (ICPMS)	Stabilized Platform Graphite Furnace Atomic Absorption
23	Chlorodibromomethane	0.5	2	---	---	---
27	Dichlorobromomethane	0.5	2	---	---	---

Table Notes:

1. The Permittee may use the GCMS method when the laboratory ML for CGMS is comparable to the lowest ML listed in Appendix 4 for chlorodibromomethane and dichlorobromomethane.

II. MONITORING LOCATIONS

The Permittee shall establish the following monitoring locations to demonstrate compliance with the effluent limitations, discharge specifications, and other requirements in this Order:

Table E-2. Monitoring Station Locations

Discharge/Distribution Point Name	Monitoring Location Name	Monitoring Location Description
--	INF-001	Untreated influent wastewater collected at the plant headworks at a representative point preceding primary treatment. Formerly M-INF.
--	INT-001A	Location for reporting the surface loading rate of the advanced wastewater (AWT) filtration process. The flow rate through the effluent filters is measured at EFF-001. Formerly M-INTA.
--	INT-001B	Treated wastewater immediately following the advanced wastewater (AWT) process and prior to UV disinfection. Formerly M-INTB.
--	INT-002	Location for monitoring UV radiation dose and UV transmittance of the UV Disinfection System.
001	EFF-001	Treated wastewater following all treatment and before it enters the Geysers Project distribution system.
002	EFF-001	Treated wastewater following all treatment and before it enters the irrigation distribution system.
006A	EFF-006A	Treated wastewater following all treatment and storage in Meadow Lane Pond D, and prior to discharge to the Laguna de Santa Rosa. EFF-006A is also the downstream receiving water monitoring location for 006A. Formerly M-002.
006B	EFF-006B	Treated wastewater following all treatment and storage in Meadow Lane Pond D, and prior to discharge to the confluence of the Laguna de Santa Rosa and Colgan Creek. EFF-006B is also the downstream receiving water monitoring location for 006B. Formerly M-003.
012A(1)	EFF-001	Treated wastewater that is discharged directly to Santa Rosa Creek from the distribution trunk line rather than being stored in Delta Pond, which is monitored prior to discharge to Santa Rosa Creek. Formerly M-001.
012A(2)	EFF-012A(2)	Treated wastewater following all treatment and storage in Delta Pond, and prior to discharge to Santa Rosa Creek. Formerly M-004.

Table E-2. Monitoring Station Locations

Discharge/Distribution Point Name	Monitoring Location Name	Monitoring Location Description
012B	EFF-012B	Treated wastewater following all treatment and storage in Delta Pond, and prior to discharge to the confluence of Santa Rosa Creek and the Laguna de Santa Rosa. Formerly M-005.
015	EFF-001	Treated wastewater following all treatment but prior to discharge to the Laguna de Santa Rosa, prior to discharge to the reclamation system and prior to storage in Meadow Lane and Delta ponds. Formerly M-001.
--	RSW-006AU	At a point in the Laguna de Santa Rosa just upstream of the D-Pond incline pump discharge. Formerly R-007.
--	RSW-006BU-C	At a point in Colgan Creek upstream of confluence with the Laguna de Santa Rosa. Formerly R-001.
	RSW-006BU-L	At a point in the Laguna de Santa Rosa upstream of the discharge from Discharge Point 006B. Formerly R-002.
--	RSW-012AU	At a point in Santa Rosa Creek upstream of the discharge from Discharge Point 012A(2). Formerly R-004.
--	RSW-012BU	At a point in Santa Rosa Creek upstream of the discharge from Discharge Point 012B. Formerly R-105.
--	RSW-012BD-S	At a point in Santa Rosa Creek near confluence with the Laguna de Santa Rosa. Exact location determined by the Model and variable depending on flows. Formerly R-018.
--	RSW-012BD-L	At a point in the Laguna de Santa Rosa approximately 75 feet upstream of confluence of Santa Rosa Creek and Laguna de Santa Rosa. Formerly R-019.
--	RSW-015U	At a point in the Laguna de Santa Rosa approximately 100 feet upstream of Llano Bridge Road. Formerly R-006.
--	BIO-001	A representative sample of the sludge or biosolids generated when removed for disposal.

III. INFLUENT MONITORING REQUIREMENTS

A. Monitoring Location INF-001

1. The Permittee shall monitor influent to the Subregional System at Monitoring Location INF-001 as follows:

Table E-3. Influent Monitoring

Parameter	Units	Sample Type	Minimum Sampling Frequency	Required Analytical Test Method
BOD_5	mg/L	24-hr composite[1]	2X/Week	Standard Methods[2]
TSS	mg/L	24-hr composite	2X/Week	Standard Methods
CTR Priority Pollutants[2]	µg/L	24-hr composite	Quarterly[3]	40 CFR 136
Influent Flow[4]	mgd	Meter	Continuous	--

Table Notes;
1. In accordance with the current edition of Standard Methods for Examination of Water and Wastewater (American Public Health Administration) or current test procedures specified in 40 CFR Part 136.
2. 24-hour composite samples shall be collected, except for those constituents that are volatile and or require grab sampling for other reasons (e.g., ultraclean sample collection methods required). The priority pollutant monitoring report shall document the sampling method used for each constituent and justify the use of grab sampling for specific constituents (e.g., volatile, ultraclean method required, etc.) Holding times for unpreserved cyanide samples shall not exceed one hour.
3. Influent monitoring shall consist of an annual full priority pollutant scan, with quarterly samples analyzed only for those pollutants detected in the full scan. The Permittee is not required to sample and analyze for asbestos.
4. Each month, the Permittee shall report average daily and average monthly flows.

IV. EFFLUENT MONITORING REQUIREMENTS

A. Monitoring Location EFF-001

1. The Permittee shall monitor disinfected, advanced-treated wastewater discharged to Discharge Points 006A, 006B, 012A(2), and 012B, when discharges occur, at Monitoring Location EFF-001, as follows:

Table E-4. Effluent Monitoring for Discharges to 006A, 006B, 012A(2), and 012B

Parameter	Units	Sample Type	Minimum Sampling Frequency	Required Analytical Test Method
Effluent Flow [1]	MGD	Meter	Continuous	--
BOD_5	mg/L	24-hour composite[2]	2X/Week	Standard Methods[3]
TSS	mg/L	24-hour composite	Daily	Standard Methods
pH	s.u.	Grab	Daily	Standard Methods
Total Coliform Bacteria	MPN/100 mL	Grab	Daily	Standard Methods
Radioactivity[4]	pCi/L	Grab	1X/ Permit Term	40 CFR 136

Table Notes:
1. Mean and peak daily and peak weekly effluent flow rates.
2. 24-hour composite samples shall be collected, except for those constituents that are volatile and or require grab sampling for other reasons (e.g., ultraclean sample collection methods required). The priority pollutant monitoring report shall document the sampling method used for each constituent and justify the use of grab sampling for specific constituents (e.g., volatile, ultraclean method required, etc.)
3. In accordance with the current edition of Standard Methods for Examination of Water and Wastewater (American Public

Table E-4. Effluent Monitoring for Discharges to 006A, 006B, 012A(2), and 012B

Parameter	Units	Sample Type	Minimum Sampling Frequency	Required Analytical Test Method
Health Administration) or current test procedures specified in 40 CFR Part 136.				
4. Radionuclides measured shall include: Combined Radium-226 and Radium-228, Gross Alpha, Gross Beta, Tritium, Strontium-90, and Uranium.				

2. The Permittee shall monitor disinfected, advanced-treated wastewater discharged to Discharge Points 012A(1) and 015, when discharges occur, at Monitoring Location EFF-001, as follows:

Table E-5. Effluent Monitoring for Discharges to 012A(1) and 015

Parameter	Units	Sample Type	Minimum Sampling Frequency	Required Analytical Test Method
Effluent Flow [1]	MGD	Meter	Continuous	--
BOD_5	mg/L	24-hour composite[2]	2X/Week	Standard Methods[3]
TSS	mg/L	24-hour composite	Daily	Standard Methods
pH	s.u.	Grab	Daily	Standard Methods
Total Coliform Bacteria	MPN/100 mL	Grab	Daily	Standard Methods
Mercury, Total Recoverable	µg/L	Grab	Weekly	USEPA Method 1631E
Nitrate Nitrogen (as N), Total	mg/L	Grab	Weekly	Standard Methods[2]
Nitrite Nitrogen (as N), Total	mg/L	Grab	Weekly	Standard Methods
Ammonia, Total	mg/L	Grab	Weekly	Standard Methods
Unionized Ammonia	mg/L	Grab	Weekly	Calculation
Organic Nitrogen, Total	mg/L	Grab	Weekly	Standard Methods
Phosphorus, Total	mg/L	Grab	Weekly	Standard Methods
Dissolved Oxygen	mg/L	Continuous	Weekly	Standard Methods
Turbidity	NTU	Continuous	Weekly	Standard Methods
Temperature	ºF	Continuous	Weekly	Standard Methods
Specific Conductivity	µmhos/cm	Continuous	Weekly	Standard Methods
Hardness	mg/L as $CaCO_3$	Grab	Quarterly	Standard Methods
Total Dissolved Solids (TDS)	mg/L	Grab	Weekly	Standard Methods
Total Chlorine Residual	mg/L	Grab	Weekly	Standard Methods
Chlorodibromomethane	µg/L	Grab	Monthly	EPA Method 624
Dichlorobromomethane	µg/L	Grab	Monthly	EPA Method 624
Bis(2-ethylhexyl)phthalate	µg/L	Grab	Weekly	EPA Method 625
Acute Toxicity	% Survival	Grab	Annually	See Section V.A.

Table E-5. Effluent Monitoring for Discharges to 012A(1) and 015

Parameter	Units	Sample Type	Minimum Sampling Frequency	Required Analytical Test Method
Chronic Toxicity	TUc	Grab	Quarterly	See section V.B below ---
Chronic Toxicity (narrative)	Passed/Triggered[4]			
Remaining CTR Priority Pollutants[5]	µg/L	24-hr composite	Quarterly	40 CFR 136
Radioactivity[6]	pCi/L	Grab	1X/ Permit Term	40 CFR 136

Table Notes:

1. Mean and peak daily and peak weekly effluent flow rates.
2. 24-hour composite samples shall be collected, except for those constituents that are volatile and or require grab sampling for other reasons (e.g., ultraclean sample collection methods required). The priority pollutant monitoring report shall document the sampling method used for each constituent and justify the use of grab sampling for specific constituents (e.g., volatile, ultraclean method required, etc.)
3. In accordance with the current edition of Standard Methods for Examination of Water and Wastewater (American Public Health Administration) or current test procedures specified in 40 CFR Part 136.
4. The Permittee shall include reporting regarding compliance with the narrative toxicity objective in Receiving Water Limitation V.A.11 by reporting whether the chronic toxicity test "passed" or "triggered" in relation to the chronic toxicity trigger of 1.6 TUc (where TUc=100/NOEC) for each single sample or 1.0 TUc as a monthly median. For narrative chronic toxicity reporting, "Passed" shall be reported when chronic toxicity effluent results do not trigger accelerated testing (e.g., a single sample result of ≤1.6 TUc or a monthly median of ≤1.0 TUc). :Triggered" shall be reported when chronic toxicity effluent results trigger accelerated testing by exceeding the chronic toxicity trigger of 1.6 TUc for a single sample or 1.0 TUc as a monthly median.
5. Holding times for unpreserved cyanide shall not exceed one hour.
6. Radionuclides measured shall include: Combined Radium-226 and Radium-228, Gross Alpha, Gross Beta, Tritium, Strontium-90, and Uranium.

B. Monitoring Locations EFF-006A, EFF-006B, EFF-012A(2), and EFF-012B

The Permittee shall monitor disinfected, advanced-treated wastewater discharged at Discharge Points 006A, 006B, 012A(2), and 012B, when discharges occur, at Monitoring Locations EFF-006A, EFF-006B, EFF-012A(2), and EFF-012B, respectively, as follows:

Table E-6. Effluent Monitoring for Discharges to 006A, 006B, EFF-012A(2), and EFF-012B

Parameter	Units	Sample Type	Minimum Sampling Frequency	Required Analytical Test Method
Effluent Flow [1]	MGD	Meter	Continuous	--
pH	s.u.	Continuous	Daily	Standard Methods
Mercury, Total Recoverable	µg/L	Grab	Weekly	USEPA Method 1631E
Nitrate Nitrogen (as N), Total	mg/L	Grab	Weekly	Standard Methods[2]
Nitrite Nitrogen (as N), Total	mg/L	Grab	Weekly	Standard Methods
Ammonia, Total	mg/L	Grab	Weekly	Standard Methods
Unionized Ammonia	mg/L	Grab	Weekly	Calculation

Parameter	Units	Sample Type	Minimum Sampling Frequency	Required Analytical Test Method
Organic Nitrogen, Total	mg/L	Grab	Weekly	Standard Methods
Phosphorus, Total	mg/L	Grab	Weekly	Standard Methods
Dissolved Oxygen [3]	mg/L	Continuous	Weekly	Standard Methods
Turbidity [3]	NTU	Continuous	Weekly	Standard Methods
Temperature [3]	ºF	Continuous	Weekly	Standard Methods
Specific Conductivity	µmhos/cm	Continuous	Weekly	Standard Methods
Hardness	mg/L as $CaCO_3$	Grab	Quarterly	Standard Methods
Total Dissolved Solids (TDS)	mg/L	Grab	Weekly	Standard Methods
Total Chlorine Residual	mg/L	Grab	Weekly	Standard Methods
Chlorodibromomethane	µg/L	Grab	Monthly [4]	EPA Method 624
Dichlorobromomethane	µg/L	Grab	Monthly [4]	EPA Method 624
Bis(2-ethylhexyl)phthalate	µg/L	Grab	Weekly [5]	EPA Method 625
Acute Toxicity	% Survival	Grab	Annually	See Section V.A.
Chronic Toxicity	TUc	Grab	Quarterly	See section V.B below
Chronic Toxicity (narrative)	Passed/Triggered [6]			---
Remaining CTR Priority Pollutants[7]	µg/L	Grab	Quarterly	40 CFR 136
Radioactivity[8]	pCi/L	Grab	1X/ Permit Term	40 CFR 136

Table Notes:

1. Mean and peak daily and peak weekly effluent flow rates.
2. In accordance with the current edition of Standard Methods for Examination of Water and Wastewater (American Public Health Administration) or current test procedures specified in 40 CFR 136.
3. For Discharge Point 012B, effluent monitoring for hydrogen ion, dissolved oxygen, turbidity, and temperature shall be conducted as described in the Discharge Monitoring Plan included in the Report of Waste Discharge. The results will be used to calculate the volume of effluent to be discharged and remain in compliance with receiving water objectives for these constituents.
4. Monthly monitoring for chlorodibromomethane and dichlorobromomethane is not required for Monitoring Locations EFF-012A(2) and EFF-012B. Instead, quarterly monitoring is required.
5. Weekly monitoring for bis(2-ethylhexyl)phthalate is not required for Monitoring locations EFF-012A(2) and EFF-012B. Instead, quarterly monitoring is required.
6. The Permittee shall include reporting regarding compliance with the narrative toxicity objective in Receiving Water Limitation V.A.11 by reporting whether the chronic toxicity test "passed" or "triggered" in relation to the chronic toxicity trigger of 1.6 TUc (where TUc=100/NOEC) for each single sample or 1.0 TUc as a monthly median. For narrative chronic toxicity reporting, "Passed" shall be reported when chronic toxicity effluent results do not trigger accelerated testing (e.g., a single sample result of ≤1.6 TUc or a monthly median of ≤1.0 TUc). :Triggered" shall be reported when chronic toxicity effluent results trigger accelerated testing by exceeding the chronic toxicity trigger of 1.6 TUc for a single sample or 1.0 TUc as a monthly median.
7. Holding times for unpreserved cyanide shall not exceed one hour.
8. Radionuclides measured shall include: Combined Radium-226 and Radium-228, Gross Alpha, Gross Beta, Tritium, Strontium-90, and Uranium.

V. WHOLE EFFLUENT TOXICITY TESTING REQUIREMENTS

A. Acute Toxicity Testing

The Permittee shall conduct acute whole effluent toxicity testing (WET) to determine compliance with the effluent limitation for acute toxicity established by section IV.A., 2 of this Order.

1. **Test Frequency.** The Permittee shall conduct acute WET testing in accordance with the schedule established by this MRP while discharging at Discharge Points 006A, 006B, 012A(1), 012A(2), 012B, or 015, as summarized in Table E-5, above.

2. **Sample Type.** For 96-hour static renewal or 96-hour static non-renewal testing, the effluent samples shall be grab samples.

3. **Test Species.** Test species for acute WET testing shall be with an invertebrate, the water flea (*Ceriodaphnia dubia*) and a vertebrate, the rainbow trout (*Oncorhynchus mykiss*). The next two species acute WET test shall be conducted during the first surface water discharge following the Permit's effective date.

4. **Test Methods.** The presence of acute toxicity shall be estimated as specified in *Methods for Measuring the Acute Toxicity of Effluents and Receiving Waters to Freshwater and Marine Organisms* (USEPA Report No. EPA-821-R-02-012, 5th edition or subsequent editions), or other methods approved by the Executive Officer.

   Test procedures related to pH control, sample filtration, aeration, temperature control and sample dechlorination shall be performed in accordance with the USEPA method and fully explained and justified in each acute toxicity report submitted to the Regional Water Board. The control of pH in acute toxicity tests is allowed, provided the test pH is maintained at the effluent pH measured at the time of sample collection, and the control of pH is done in a manner that has the least influence on the test water chemistry and on the toxicity of other pH sensitive materials such as some heavy metals, sulfide and cyanide.

5. **Test Dilutions.** The acute toxicity test shall be conducted using 100 percent effluent.

6. **Test Failure.** If an acute toxicity test does not meet all test acceptability criteria, as specified in the test method, the Permittee shall re-sample and re-test as soon as possible, not to exceed 7 days following notification of test failure.

7. **Accelerated Monitoring.** If the result of any acute toxicity test fails to meet the single test minimum limitation (70 percent survival), and the testing meets all test acceptability criteria, the Permittee shall take two more samples, one within 14 days and

one within 21 days following receipt of the initial sample result. If any one of the additional samples do not comply with the three sample median minimum limitation (90 percent survival), the Permittee shall initiate a Toxicity Reduction Evaluation (TRE) in accordance with section VI.C.2.a.ii of this Order. If the two additional samples are in compliance with the acute toxicity requirement and testing meets all test acceptability criteria, then a TRE will not be required. If the discharge stops before additional samples can be collected, the Permittee shall contact the Executive Officer within 21 days with a plan to demonstrate compliance with the effluent limitation.

8. **Notification.** The Permittee shall notify the Regional Water Board verbally within 72 hours and in writing within 14 days after receipt of test results exceeding the acute toxicity effluent limitation during regular or accelerated monitoring. The notification shall describe actions the Permittee has taken or will take to investigate and correct the cause(s) of toxicity. It may also include a status report on any actions required by this Order, with a schedule for actions not yet completed. If no actions have been taken, the reasons shall be given.

9. **Reporting.** The acute toxicity test results shall include the contracting laboratory's complete report provided to the Permittee and shall be in accordance with section 12 (Report Preparation) of *Methods for Measuring the Acute Toxicity of Effluents and Receiving Waters to Freshwater and Marine Organisms* (USEPA Report No. EPA-821-R-02-012, 5th Edition or subsequent editions). The submitted report shall clearly identify test results.

10. **Ammonia Toxicity.** The acute toxicity test shall be conducted without modifications to eliminate ammonia toxicity.

B. Chronic Toxicity Testing

The Permittee shall conduct chronic toxicity testing to demonstrate compliance with the Basin Plan's water quality objective for toxicity. The Permittee shall meet the following chronic toxicity testing requirements:

1. **Test Frequency.** The Permittee shall conduct quarterly chronic WET testing in accordance with the schedule established by this MRP while discharging at Discharge Points 006A, 006B, 012A(1), 012A(2), 012B, and 015, as summarized in Tables E-5, above.

2. **Sample Type.** Effluent samples for chronic toxicity shall be 24-hour composite samples for direct discharges to surface waters at Discharge Points 012A(1)and 015, and shall be representative of the volume and quantity of the discharge. For discharges to surface waters from storage ponds, the storage ponds are presumed to be completely mixed, so effluent samples shall be grab samples. For toxicity tests requiring renewals, grab

samples collected on consecutive days are required. When tests are conducted off-site, a minimum of three samples shall be collected, in accordance with USEPA test methods.

3. **Test Species.** Test species for chronic WET testing shall be a vertebrate, the fathead minnow, *Pimephales promelas* (larval survival and growth Test Method 1000.0), an invertebrate, the water flea, *Ceriodaphnia dubia* (survival and reproduction Test Method 1002.01), and a plant, the green algae, *Selanastrum capricornutum* (also named *Raphidocelis subcapitata*) (growth Test Method 1003.0). At least every 5 years, the Permittee shall conduct two suites of chronic WET testing using the three species listed above. After this screening period, monitoring shall be conducted annually using the most sensitive species. The next multiple species chronic WET test shall be conducted during the first discharge to surface waters following the Permit's effective date.

4. **Test Methods.** The presence of chronic toxicity shall be estimated as specified in USEPA's *Short-Term Methods for Estimating the Chronic Toxicity of Effluents and Receiving Water to Freshwater Organisms* (USEPA Report No. EPA-821-R-02-013, or subsequent editions).

   Test procedures related to pH control, sample filtration, aeration, temperature control and sample dechlorination shall be performed in accordance with the USEPA method and fully explained and justified in each chronic toxicity report submitted to the Regional Water Board. The control of pH in chronic toxicity tests is allowed, provided the test pH is maintained at the pH of the receiving water measured at the time of sample collection, and the control of pH is done in a manner that has the least influence on the test water chemistry and on the toxicity of other pH sensitive materials such as some heavy metals, sulfide and cyanide.

5. **Test Dilutions.** The chronic toxicity test shall be conducted using a series of at least five dilutions and a control. The series shall consist of the following dilution series: 12.5, 25, 50, 75, and 100 percent, and a control. Effluent dilution and control water may be receiving water or standard synthetic laboratory water, as described in the USEPA test methods manual. Where toxicity or biostimulatory issues are not a concern in the receiving water, receiving water is preferred for control and dilution water. If the dilution water used is different from the test organism culture water, a second control using culture water shall be used.

6. **Reference Toxicant.** If organisms are not cultured in-house, concurrent testing with a reference toxicant shall be conducted. Where organisms are cultured in-house, monthly reference toxicant testing is sufficient. Reference toxicant tests also shall be conducted using the same test conditions as the effluent toxicity tests (e.g., same test duration, etc.).

7. **Test Failure.** If either the reference toxicant test or the chronic toxicity test does not meet all test acceptability criteria, as specified in the test method, the Permittee shall re-sample and re-test as soon as possible, not to exceed 14 days following notification of test failure.

8. **Notification.** The Permittee shall notify the Regional Water Board verbally within 72 hours and in writing within 14 days after receipt of test results exceeding the chronic toxicity monitoring trigger during regular or accelerated monitoring.

9. **Accelerated Monitoring Requirements.** If the result of any routine chronic toxicity sampling exceeds the chronic toxicity monitoring trigger of 1.6 TUc as specified in section VI.C.2.a of this Order, and the testing meets all test acceptability criteria, the Permittee shall initiate accelerated monitoring. Accelerated monitoring shall consist of up to four additional effluent samples and dilution series (specified in number 5 above) – with one test for each test species showing toxicity results exceeding the toxicity trigger, as defined by conditions a. through c. below. Accelerated monitoring test shall be conducted approximately every week over a four week period.

   Testing shall commence within 14 days of receipt of initial sample results which indicated an exceedance of the chronic toxicity trigger. If the discharge will cease before the additional samples can be collected, the Permittee shall contact the Executive Officer within 21 days with a plan to address elevated levels of chronic toxicity in effluent and/or receiving water. The following protocol shall be used for accelerated monitoring and TRE implementation:

   a. If the result of any accelerated toxicity test exceeds 1.0 TUc, the Permittee shall cease accelerated monitoring, and within 30 days of the date of completion of the accelerated monitoring, initiate the TRE Workplan developed in accordance with section VI.C.2.a.iiof this Order to investigate the cause(s) and identify actions to reduce or eliminate the chronic toxicity. Within 30 days of completing the TRE Workplan implementation, the Permittee shall submit a report to the Regional Water Board that shall include, at a minimum:

      i. Specific actions the Permittee took to investigate and identify the cause(s) of toxicity, including a TRE WET monitoring schedule;

      ii. Specific actions the Permittee took to mitigate the impact of the discharge and prevent the recurrence of toxicity;

      iii. Recommendations for further actions to mitigate continued toxicity, if needed; and

      iv. A schedule for implementation of recommended actions.

b. If the results of four consecutive accelerated monitoring tests do not exceed 1.0 TUc, as a monthly median, the Permittee may cease accelerated monitoring and resume regular chronic toxicity monitoring. However, if there is adequate evidence of a pattern of effluent toxicity, the Regional Water Board's Executive Officer may require that the Permittee initiate a TRE.

c. If the source(s) of the toxicity is easily identified (i.e. temporary plant upset), the Permittee shall make necessary corrections to the facility and shall continue accelerated monitoring until four (4) consecutive accelerated tests do not exceed the monitoring trigger. Upon confirmation that the chronic toxicity has been removed, the Permittee may cease accelerated monitoring and resume regular chronic toxicity monitoring.

10. Ammonia Toxicity. The chronic toxicity test shall be conducted without modifications to eliminate ammonia toxicity.

C. Chronic Toxicity Reporting

1. Routine Reporting. Chronic toxicity monitoring results shall be submitted with the monthly self-monitoring report for the month that chronic toxicity monitoring was performed. Routine reporting shall include the following in order to demonstrate compliance with permit requirements:

a. WET test reports shall include the contracting laboratory's complete report provided to the Permittee and shall be in accordance with the appropriate "Report Preparation and Test Review" sections of the method manuals and this MRP. Chronic toxicity test results shall be submitted with the self-monitoring report. The WET test report shall contain a narrative report that includes details about WET test procedures and results, including the following:

i. Receipt and handling of the effluent sample that includes a tabular summary of initial water quality characteristics;

ii. The source and make-up of the lab control/diluent water used for the test;

iii. Any manipulations done to lab control/diluent and effluent such as filtration, nutrient addition, etc.;

iv. Identification of any reference toxicant testing performed;

v. Tabular summary of test results for control water and each effluent dilution and statistics summary to include calculation of NOEC, TU_c and IC_{25};

vi. Identification of any anomalies or nuances in the test procedures or results;

vii. Summary and conclusions section; and

viii. WET test results shall include, at a minimum, for each test:

(a) sample date(s);

(b) test initiation date;

(c) test species;

(d) end point values for each dilution (e.g., number of young, growth rate, percent survival);

(e) NOEC value(s) in percent effluent;

(f) IC15, IC25, IC40, and IC50 values (or EC15, EC25…etc.) in percent effluent;

(g) TUc values (100/NOEC);

(h) Mean percent mortality (±s.d.) after 96 hours in 100 percent effluent (if applicable);

(i) NOEC and LOEC values for reference toxicant test(s);

(j) IC50 or EC50 value(s) for reference toxicant test(s);

(k) Available water quality measurements for each test (e.g., pH, DO, temperature, conductivity, hardness, salinity, ammonia);

(l) Statistical methods used to calculate endpoints;

(m) the statistical output page, which includes the calculation of percent minimum significant difference (PMSD); and

(n) results of applicable reference toxicant data with the statistical output page identifying the species, NOEC, LOEC, type of toxicant, dilution water used, concentrations used, PMSD and dates tested; the reference toxicant control charts for each endpoint, to include summaries of reference toxicant tests performed by the contracting laboratory; and any information on deviations from standard test procedures or problems encountered in completing the test and how the problems were resolved.

b. Compliance Summary. In addition to the WET report, the Permittee shall submit a compliance summary of chronic toxicity tests results, expressed in NOEC and TUc, for at least three of the most recent tests, and organized by test species, type of test (survival, growth or reproduction), and monitoring frequency (routine, accelerated, or TRE). Each compliance summary report shall clearly identify whether or not the

effluent discharge is below the chronic toxic monitoring trigger and, in the event that the effluent discharge exceeds a single sample or median chronic toxicity trigger, and the status of efforts (e.g., accelerated monitoring, TRE, TIE) to identify the source of chronic toxicity as required by section V.B.9 of this MRP.

2. **Quality Assurance Reporting.** Because the permit requires sublethal hypothesis testing endpoints from methods 1000.0, 1002.0, and 1003.0 in the test methods manual titled *Short-term Methods for Estimating the Chronic Toxicity of Effluents and Receiving Waters to Freshwater Organisms* (USEPA Report No. EPA-821-R-02-013, 2002, or subsequent editions), with-in test variability must be reviewed for acceptability and variability criteria (upper and lower PMSD bounds) must be applied, as directed under section 10.2.8 – *Test Variability* of the test methods manual. Under section 10.2.8, the calculated PMSD for both reference toxicant test and effluent toxicity test results must be compared with the upper and lower PMSD bounds variability criteria specified in Table 6 – *Variability Criteria (Upper and Lower PMSD Bounds) for Sublethal Hypothesis Testing Endpoints Submitted Under NPDES Permits*, following the review criteria in paragraphs 10.2.8.2.1 through 10.2.8.2.5 of the test methods manual. Based on this review, only accepted effluent toxicity test results shall be reported.

VI. LAND DISCHARGE MONITORING REQUIREMENTS – NOT APPLICABLE

This section is not applicable to the Permittee as treated wastewater is not discharged to or applied to land for the purpose of disposal. The Permittee reclaims treated wastewater; thus, the Permittee has Reclamation Monitoring Requirements rather than Land Discharge Monitoring Requirements.

VII. RECLAMATION MONITORING REQUIREMENTS

A. Recycled Water Monitoring

1. In addition to monitoring for compliance with reclamation specifications, referred to in section IV.C of this Order, the Permittee shall monitor treated disinfected wastewater at monitoring location EFF-001 prior to reclamation at Distribution Points 001 and 002, as follows:

Table E-7. Reclamation Monitoring Requirements

Parameter	Units	Sample Type	Minimum Sampling Frequency	Required Analytical Test Method
Flow[1]	mgd	Meter	Continuous	Meter
BOD_5	mg/L	24-hr Composite	2x/ Week	Standard Methods[2]
TSS	mg/L	24-hr Composite	Daily	Standard Methods
pH	s.u.	Grab	Daily	Standard Methods
Total Coliform Organisms	MPN/ 100 mL	Grab	Daily	Standard Methods
Nitrate Nitrogen (as N), Total[3,4]	mg/L	Grab	Monthly	Standard Methods
Nitrite Nitrogen, Total[3,4]	mg/L	Grab	Monthly	Standard Methods
Ammonia Nitrogen, Total[3,4]	mg/L	Grab	Monthly	Standard Methods
Organic Nitrogen[3,4]	mg/L	Grab	Monthly	Standard Methods
Total Dissolved Solids[4]	mg/L	Grab	Monthly[5]	Standard Methods
Chloride	mg/L	Grab	Monthly[5]	Standard Methods
Boron	mg/L	Grab	Monthly[5]	Standard Methods
Sodium	mg/L	Grab	Monthly[5]	Standard Methods
Title 22 Drinking Water Constituents	µg/L (or other as appropriate)	24-hour Composite	1X/ Permit Term	40 CFR 136
Visual Observations	--	--	[6]	Visual

Table Notes:

1. Each month, the Permittee shall report the number of days that treated wastewater was used for reclamation at all authorized reclamation sites, as well as the average and maximum daily flow rate.
2. In accordance with the current edition of Standard Methods for Examination of Water and Wastewater (American Public Health Administration) or current test procedures specified in 40 CFR Part 136.
3. Monitoring for nitrate, nitrite, ammonia and organic nitrogen is for the purpose of determining total nitrogen concentration for agronomic rate calculations.
4. Monitoring results for nitrogen and TDS may be obtained from sampling at EFF-006A, 006B, 012A(2), or EFF-012B in lieu of monitoring at EFF-001.
5. The monitoring frequency for TDS, chloride, boron, and sodium may be reduced or eliminated by the Regional Water Board Executive Officer if monitoring data demonstrates that concentrations of these constituents are consistently lower than water quality objectives for protection of groundwater.
6. During periods of discharge to the irrigation system, visual observations shall be conducted at least monthly to verify compliance with recycled water requirements in Attachment G and shall confirm proper operation of the recycled water system and associated BMPs and include a record of any malfunctions or findings of improper operation, including, but not limited to odors, evidence of surface run-off, or ponding that exceeds 24-hours. Visual observations may be performed by the irrigation users in accordance with the Permittee's user agreements. The Quarterly Recycled Water Report shall include the daily volume of treated wastewater discharged to the irrigation system and any observations indicating non-compliance with the provisions of the waste discharge requirements.

2. In addition to the following, the Permittee shall comply with Water Reclamation Requirements and Provisions contained in Attachment G of this Order.

B. Recycled Water Production and Use

1. Recycled water quality characteristics and precipitation data shall be used to ascertain nitrogen loading rates at each recycled water use site. The following information shall be reported for each use site or use site type:

2. Reporting of the required monitoring shall be provided annually in the Annual Recycled Water Report to the Regional Water Board, and annually to recycled water users.

Table E-8. Recycled Water Production and Use

Parameter	Units	Sample Type	Minimum Monitoring Frequency
Volume of recycled water[1]	Acre-feet	Meter	Monthly
Total area of application	Acres	Observation	Monthly
Total Nitrogen application rate[2,3]	lbs/acre-month	Calculation	Monthly
Rainfall	Inches	Gage	Daily

Table Notes:

1. Estimation of the volume of recycled water shall not include other potable or non-potable "make-up" water used in conjunction with recycled water.
2. Nitrogen application rate shall consider nitrogen content of the recycled water, based on effluent monitoring data.
3. Nitrogen concentrations shall be calculated and reported "as N". For example, nitrate-nitrogen = 27 mg/L as NO_3 shall be converted and reported as nitrate-nitrogen = 6.1 mg/L as N using a conversion factor of 14.067 (N)/62.0049 (NO_3).

VIII. RECEIVING WATER MONITORING REQUIREMENTS – SURFACE WATER AND GROUNDWATER

A. Surface Water Monitoring Locations RSW-006AU, RSW-006BU-C, RSW-006BU-L, RSW-012AU, RSW-012BU, and RSW-015U

1. The Permittee shall monitor upstream conditions in receiving waters at Monitoring Locations RSW-003U, RSW-006AU, RSW-006BU-C, RSW-006BU-L, RSW-012AU, RSW-012BU, and RSW-015U, respectively, during periods of discharge as follows:

Table E-9. Receiving Water Monitoring Requirements –RSW-006AU, RSW-006BU-C, RSW-006BU-L, RSW-012AU, RSW-012BU, and RSW-015U

Parameter	Units	Sample Type	Minimum Sampling Frequency	Required Analytical Test Method
pH	s.u.	Continuous	Daily	Standard Methods[1]
Dissolved Oxygen	mg/L	Continuous	Daily	Standard Methods
Turbidity	NTU	Continuous	Daily	Standard Methods
Temperature	°F	Continuous	Daily	Standard Methods
Specific Conductivity	µmhos/cm	Continuous	Daily	Standard Methods
Ammonia Nitrogen	mg/L	Grab	Monthly	Standard Methods
Un-ionized Ammonia	mg/L	Grab	Monthly	Calculation
Nitrate Nitrogen	mg/L	Grab	Monthly	Standard Methods
Organic Nitrogen	mg/L	Grab	Monthly	Standard Methods
Total Phosphorus	mg/L	Grab	Monthly	Standard Methods
Hardness (as $CaCO_3$)	mg/L	Grab	Quarterly	Standard Methods
CTR Priority Pollutants	µg/L	Grab	Quarterly	40 CFR 136

Table Notes:
1. In accordance with the current edition of Standard Methods for Examination of Water and Wastewater (American Public Health Administration) or current test procedures specified in 40 CFR Part 136.

2. The Permittee shall monitor downstream conditions in receiving waters at Monitoring Location RSW-012BD-S when discharging at Discharge Point 012B as follows.

a. When discharging from Discharge Point 012B, the Permittee shall monitor flow, hydrogen ion (pH), dissolved oxygen, turbidity and temperature in the effluent and upstream receiving waters continuously and use this information to modulate each day (or more frequently as necessary if receiving water conditions are variable) the amount of discharge such that receiving water quality limits are not exceeded at the edge of the Zone of Initial Dilution[1], as determined according to the model incorporated into and described in the *Laguna Subregional Water Reclamation System Receiving Water Quality Limit Compliance Assurance and Monitoring Plan* (the Model). Downstream receiving water conditions at RSW-012BD-S will be determined via the Model outputs. The Permittee shall use the Model at least once per day of discharge to determine daily average receiving water turbidity impact and hourly average receiving water pH, dissolved oxygen, and temperature impacts at

[1] The Zone of Initial Dilution (ZID) was developed based on concepts contained in the California Ocean Plan, which defines initial dilution as "the process which results in the rapid and irreversible turbulent mixing of wastewater with ocean water around the point of discharge." The framework for the ZID in the Model recognizes that the momentum of treated wastewater exiting the outfall results in initial mixing (or dilution) in very close proximity to the outfall. The area of mixing is referred to as the ZID.

RSW-012BD-S. Compliance with receiving water limitations for pH, dissolved oxygen, turbidity and temperature shall be determined using the respective daily and hourly averages produced by the Model. The Permittee shall monitor downstream receiving waters at RSW-012BD-S once per permit cycle during discharge to surface waters to verify the accuracy of model calculations, as shown in Table E-10. The Model verification shall occur during the first discharge event after the adoption of this Order or as soon as is physically feasible.

Table E-10. Receiving Water Monitoring Requirements – RSW-012BD-S

Parameter	Units	Sample Type	Minimum Sampling Frequency	Required Analytical Test Method
pH	s.u.	Model Calculation	Hourly	Model Calculation
Dissolved Oxygen	mg/L	Model Calculation	Hourly	Model Calculation
Turbidity	NTU	Model Calculation	Daily	Model Calculation
Temperature	°F	Model Calculation	Hourly	Model Calculation
Specific Conductivity	µmhos/cm	Model Calculation	Hourly	Model Calculation
pH	s.u.	Continuous	Once per permit term [2]	Standard Methods[1]
Dissolved Oxygen	mg/L	Continuous	Once per permit term	Standard Methods
Turbidity	NTU	Continuous	Once per permit term	Standard Methods
Temperature	°F	Continuous	Once per permit term	Standard Methods
Specific Conductance	µmhos/cm	Continuous	Once per permit term	Standard Methods

Table Notes:

1. In accordance with the current edition of Standard Methods for Examination of Water and Wastewater (American Public Health Administration) or current test procedures specified in 40 CFR Part 136.
2. For model verification, "once per permit term" means a single monitoring period that extends two weeks or the length of the first discharge period if the duration of the discharge is less than two weeks.

B. Groundwater Monitoring

There are no groundwater monitoring requirements in this monitoring and reporting program. Groundwater monitoring may be established in the future, if necessary, to assess impacts of effluent discharge to the reclamation system.

IX. OTHER MONITORING REQUIREMENTS

A. Sludge Monitoring (Monitoring Location BIO-001)

1. Monitoring Location BIO-001

a. A composite sample of sludge shall be collected quarterly at Monitoring Location BIO-001 in accordance with EPA's *POTW Sludge Sampling and Analysis Guidance Document* (USEPA Report No. EPA 833-B-89-100) and tested for priority pollutants listed in 40 CFR Part 122, Appendix D, Tables II and III (excluding total phenols).

b. Sampling records shall be retained for a minimum of **5 years**. A log shall be maintained of sludge quantities generated and of handling and disposal activities. The frequency of entries is discretionary; however, the log must be complete enough to serve as a basis for developing the Sludge Handling and Disposal Activity report that is required as part of the Annual Report.

B. Filtration Process Monitoring[2] (Monitoring Locations INT-001A and INT-001B)

Filtration process monitoring shall demonstrate compliance with section IV.D.1 (Filtration Process Requirements) of this Order and applies to all treated wastewater flows. The Permittee is required to implement the following filtration process monitoring:

1. Effluent Filter Monitoring (Monitoring Location INT-001A)

The Permittee shall calculate on a daily basis the surface loading rate in gallons per minute per square feet and report the maximum surface loading rate and any exceedances of the surface loading rate limitation. The rate of flow through the tertiary filters shall be measured at EFF-001.

2. Effluent Filter Monitoring (Monitoring Location INT-001B)

a. Monitoring. The turbidity of the filter effluent shall be continuously measured and recorded. Should the turbidity meter and recorder fail, grab sampling at a minimum frequency of 1.2 hours may be substituted for a period of up to 24 hours. The recorded data shall be maintained by the Permittee for at least 3 years. The daily maximum and 95th percentile turbidity results shall be reported on the monthly monitoring reports.

---

[2] Filtration Process Monitoring requirements are process control specifications and not effluent limitations as defined in Water Code section 13385.1(d).

b. **Compliance.** Compliance with the effluent turbidity limitation specified in section IV.D.1.b.ii (Filtration Process Requirements) of this Order shall be determined using the levels of recorded turbidity taken at intervals of no more than 1.2 hours over a 24-hour period. Exceedances of the maximum turbidity requirement referenced in section IV.D.1.b.iii of this Order shall not be considered a violation of these waste discharge requirements if such exceedance does not exceed a duration of one minute.

c. **Reporting.** If the filter effluent turbidity exceeds an average of 2 NTU during a 24-hour period, 5 NTU more than 5 percent of the time during a 24-hour period, or 10 NTU at any time, the incident shall be reported in the monthly self-monitoring report and the incident shall be reported to the Regional Water Board and CDPH by telephone within 24 hours in accordance with Provision VI.A.2.b of this Order. A written report describing the incident and the actions undertaken in response shall be included in the monthly self-monitoring report. Mitigation of the event shall consist of diverting the non-compliance effluent or automatically activated chemical addition to comply with title 22 requirements.

C. UV System Monitoring[3] (Monitoring Location INT-002)

1. **Monitoring.** The UV transmittance of the influent to the UV disinfection system shall be monitored continuously and recorded. The operational UV dose shall be calculated from UV transmittance, flow per channel, UV power, and using lamp age and sleeve fouling factors, in accordance with CDPH recommendations.

2. **Compliance.** The UV transmittance shall not fall below 50 percent of maximum at any time, unless otherwise approved by CDPH. The operational UV dose shall not fall below 100 millijoules per square centimeter (mJ/cm2) at any time, unless otherwise approved by CDPH.

3. **Reporting.** The Permittee shall report daily average and lowest daily transmittance and operational UV dose on its monthly monitoring reports. If the UV transmittance falls below 50 percent or UV dose falls below 100 mJ/cm2, the event shall be reported to the Regional Water Board and CDPH by telephone within 24 hours. Any inadequately treated and disinfected wastewater shall be diverted to a storage basin or an upstream process for adequate treatment.

[3] UV System Monitoring requirements are process control specifications, and not effluent limitations as defined in Water Code section 13385.1(d).

X. REPORTING REQUIREMENTS

A. General Monitoring and Reporting Requirements

1. The Permittee shall comply with all Standard Provisions (Attachment D) related to monitoring, reporting, and recordkeeping.

B. Self Monitoring Reports (SMRs)

1. The Permittee shall submit electronic Self-Monitoring Reports (eSMRs) using the State Water Board's California Integrated Water Quality System (CIWQS) Program Web site (http://www.waterboards.ca.gov/ciwqs/index.html). The CIWQS Web site will provide additional directions for SMR submittal in the event there will be service interruption for electronic submittal. The Permittee shall maintain sufficient staffing and resources to ensure it submits eSMRs that are complete and timely. This includes provision of training and supervision of individuals (e.g., Permittee personnel or consultant) on how to prepare and submit eSMRs.

2. The Permittee shall report in the SMR the results for all monitoring specified in this MRP under sections III through IX. The Permittee shall submit monthly SMRs including the results of all required monitoring using USEPA-approved test methods or other test methods specified in this Order. If the Permittee monitors any pollutant more frequently than required by this Order, the results of this monitoring shall be included in the calculations and reporting of the data submitted in the SMR.

3. All monitoring results reported shall be supported by the inclusion of the complete analytical report from the laboratory that conducted the analyses.

4. Monitoring periods and reporting for all required monitoring shall be completed according to the following schedule:

Table E-11. Monitoring Periods and Reporting Schedule

Sampling Frequency	Monitoring Period Begins On…	Monitoring Period	SMR Due Date
Continuous	Permit effective date	All	First day of second calendar month following month of sampling
Daily	Permit effective date	(Midnight through 11:59 PM) or any 24-hour period that reasonably represents a calendar day for purposes of sampling	First day of second calendar month following month of sampling
Weekly	Sunday following permit effective date or on permit effective date if on a Sunday	Sunday through Saturday	First day of second calendar month following month of sampling
Twice Weekly	Sunday following permit effective date or on permit effective date if on a Sunday	Sunday through Saturday	First day of second calendar month following month of sampling
Monthly	First day of calendar month following permit effective date or on permit effective date if that date is first day of the month	First day of calendar month through last day of calendar month	First day of second calendar month following month of sampling
Quarterly	Closest of January 1, April 1, July 1, or October 1 following (or on) permit effective date	January through March April through June July through September October through December	First day of second calendar month following end of quarter
Annually	January 1 following or on permit effective date	January 1 through December 31	March 1, each year
Once per Permit Term	Permit effective date	All	With application for permit renewal

5. **Reporting Protocols.** The Permittee shall report with each sample result the applicable Minimum Level (ML), the Reporting Level (RL) and the current Method Detection Limit (MDL), as determined by the procedure in 40 CFR Part 136.

   The Permittee shall report the results of analytical determinations for the presence of chemical constituents in a sample using the following reporting protocols:

   a. Sample results greater than or equal to the reported ML shall be reported as measured by the laboratory (i.e., the measured chemical concentration in the sample).

b. Sample results less than the RL, but greater than or equal to the laboratory's MDL, shall be reported as "Detected, but Not Quantified," or DNQ. The estimated chemical concentration of the sample shall also be reported.

For the purposes of data collection, the laboratory shall write the estimated chemical concentration next to DNQ as well as the words "Estimated Concentration" (may be shortened to "Est. Conc."). The laboratory may, if such information is available, include numerical estimates of the data quality for the reported result. Numerical estimates of data quality may be percent accuracy (+ a percentage of the reported value), numerical ranges (low to high), or any other means considered appropriate by the laboratory.

c. Sample results less than the laboratory's MDL shall be reported as "Not Detected," or ND.

d. Permittees are to instruct laboratories to establish calibration standards so that the ML value (or its equivalent if there is differential treatment of samples relative to calibration standards) is the lowest calibration standard. At no time is the Permittee to use analytical data derived from extrapolation beyond the lowest point of the calibration curve.

6. The Permittee shall submit SMRs in accordance with the following requirements:

a. The Permittee shall arrange all reported data in a tabular format. The data shall be summarized to clearly illustrate whether the facility is operating in compliance with interim and/or final effluent limitations. The reported data shall include calculation of all effluent limitations that require averaging, taking of a median, or other computation. The Permittee is not required to duplicate the submittal of data that is entered in a tabular format within CIWQS. When electronic submittal of data is required and CIWQS does not provide for entry into a tabular format within the system, the Permittee shall electronically submit the data in a tabular format as an attachment. The Permittee's SMR shall clearly identify periods of no discharge to each Discharge or Distribution Point in accordance with the Discharger User Guide for eSMRs.

b. The Permittee shall attach a cover letter to the SMR. The information contained in the cover letter shall clearly identify:

i. Facility name and address;

ii. WDID number;

iii. Applicable period of monitoring and reporting;

iv. Noncompliance with the WDRs, including a description of any requirement not complied with and a description of the event and reason;

v. Corrective actions taken or planned; and

vi. The proposed time schedule for corrective actions.

c. SMRs must be submitted to the Regional Water Board, signed and certified as required by the Standard Provisions (Attachment D), to the CIWQS Program Web site (http://www.waterboards.ca.gov/ciwqs/index.html). In the event that paper submittal of SMRs is required, the Permittee shall submit the SMR to the address listed below:

Regional Water Quality Control Board
North Coast Region
5550 Skylane Blvd., Suite A
Santa Rosa, CA 95403

C. Discharge Monitoring Reports (DMRs)

DMRs are required for facilities designated as major dischargers.

1. As described in Section X.B.1 above, at any time during the term of this permit, the State or Regional Water Board may notify the discharger to electronically submit self-monitoring reports that will satisfy federal requirements for submittal of Discharge Monitoring Reports (DMRs). Until such notification is given, major dischargers shall submit DMRs in accordance with the requirements described below. The Subregional System is currently designated as a major discharger.

2. DMRs must be signed and certified as required by the standard provisions (Attachment D). The Discharger shall submit the original DMR and one copy of the DMR to the address listed below:

STANDARD MAIL	FEDEX/UPS/ OTHER PRIVATE CARRIERS
State Water Resources Control Board Division of Water Quality c/o Discharge Monitoring Report Processing Center Post Office Box 100 Sacramento, CA 95812-1000	State Water Resources Control Board Division of Water Quality c/o DMR Processing Center 1001 I Street, 15th Floor Sacramento, CA 95814

3. All discharge monitoring results must be reported on the official USEPA pre-printed DMR forms (EPA Form 3320-1). Forms that are self-generated or modified cannot be accepted.

D. Other Reports

1. The Permittee shall report the results of any special studies, acute and chronic toxicity testing, TRE/TIE, PMP, and Pollution Prevention Plan required by Special Provisions – VI.C.2 and VI.C.3 of this Order.

2. **Annual Summary Report.** The Permittee shall submit an annual report to the Regional Water Board for each calendar year through the CIWQS Program web site. In the event that a paper copy of the annual report is required, the Permittee shall submit the report to the address in section X.B.6.c., above. The report shall be submitted by March 1st of the following year. The report shall, at a minimum, include the following:

   a. Both tabular and, where appropriate, graphical summaries of the monitoring data and disposal records from the previous year. If the Permittee monitors any pollutant more frequently than required by this Order, using test procedures approved under 40 CFR, section 136 or as specified in this Order, the results of this monitoring shall be included in the calculation and report of the data submitted SMR.

   b. A comprehensive discussion of the Facility's compliance (or lack thereof) with all effluent limitations and other WDRs, and the corrective actions taken or planned, which may be needed to bring the discharge into full compliance with this Order.

   c. The names and telephone numbers of persons to contact regarding the wastewater treatment Facility for emergency and routine situations;

   d. A statement certifying when the flow meter(s) and other monitoring instruments and devices were last calibrated, including identification of who performed the calibration;

   e. A statement certifying whether the current operation and management manual and spill contingency plan, reflect the wastewater treatment Facility as currently constructed and operated, and the dates when these documents were last reviewed and last revised for adequacy.

3. **Water Reclamation System**

   a. Reclamation Operations Reporting. The Permittee shall submit reports pertaining to the operation, performance, monitoring, and other activities related to water reclamation as follows:

      i. Quarterly Recycled Water Report. The Permittee shall submit a quarterly recycled water summary report, as required by section 13523.1(b)(4) of the Water Code and other requirements of this Order, containing the following information:

(a) Total volume of recycled water supplied to each recycled water user for each month of the reporting period;

(b) Total number of recycled water use sites;

(c) Locations of recycled water use sites, including a map and tabular summary with acreage and name of property owner; and

(d) A summary of recycled water use site inspections conducted by the Permittee or recycled water users. Required reporting includes the number and dates of inspections conducted for each use site during the reporting period; all observations of recycled water over-application and/or runoff; and the number of observations of noncompliance for each use site including description of the noncompliance and its cause, the period of noncompliance, and if the noncompliance has not been corrected, the anticipated time it is expected to continue and steps taken or planned to reduce, eliminate, and prevent recurrence of the noncompliance.

(e) A summary of operational problems, plant equipment malfunctions, and any diversion of recycled water which does not meet the requirements specified in this Order.

(f) Documentation of notifications to users if any recycled water was delivered that did not meet the requirements specified in this Order.

(g) A record of equipment or process failures initiating an alarm that prevented recycled water from meeting the requirements of this Order, as well as any corrective and preventative actions.

ii. **Annual Recycled Water Report.** The annual report shall include but not be limited to the following;

(a) A compliance summary and discussion of the compliance record for the prior calendar year, including:

(1) In the event of noncompliance, the report shall also discuss the corrective actions taken and planned to bring the reclamation program into full compliance with this Order.

(2) Certification that all reasonable BMPs and management practices were implemented to ensure efficient and compliant operation of the recycled water system; and

(3) Identification of any other problems that occurred in the recycled water system during the prior year, including repeated occurrences of incidental runoff of which the Permittee is aware, and plans to rectify those problems in the coming year.

(b) A summary of major repairs scheduled or completed that affected the reclamation system appurtenances and irrigation areas;

(c) Enforcement and monitoring activities that occurred during the previous year, and identification of any problems and how the problems were addressed;

(d) If applicable, a summary of all cross-connection testing and back-flow prevention activities (inspections, maintenance) and a summary of any problems identified, or certification that no problems occurred;

(e) Documentation of compliance with California Health and Safety Code section 116815 as specified in Water Reclamation Requirement B.16 and B.17 of Attachment G regarding the installation and marking of new sites or newly retrofitted recycled water piping; and

(f) A description of agronomic rate compliance, pursuant to section VII.B of the MRP.

iii. Other Recycled Water Reporting

(a) New Use Site Reporting. The Permittee shall notify the Regional Water Board Executive Officer and the CDPH through the local district office in anticipation of reclaiming water at a new location. This notification shall be made far enough in advance of commencement of reclamation activities at the new location to provide sufficient time for submittal and approval of all technical information required by section C of Attachment G (e.g., sections C.2, C.5, and C.7).

4. Annual Pretreatment Reporting Requirements. The Permittee shall submit annually a report to the North Coast Water Board, with copies to USEPA Region 9 and the State Water Board, describing the Permittee's pretreatment activities over the previous 12 months. In the event that the Permittee is not in compliance with any conditions or requirements of this Order, including noncompliance with pretreatment audit/compliance inspection requirements, then the Permittee shall also include the reasons for noncompliance and state how and when the Permittee shall comply with such conditions and requirements.

An annual report shall be submitted by March 1st of the following year, and include at least the following items:

a. A summary of analytical results from representative, flow proportioned, 24-hour composite sampling of the POTW's influent and effluent for those pollutants USEPA has identified under section 307(a) of the CWA which are known or suspected to be discharged by industrial users.

Sludge shall be sampled during the same 24-hour period and analyzed for the same pollutants as influent and effluent sampling and analysis. The sludge analyzed shall be a composite sample of a minimum of 12 discrete samples taken at equal time intervals over the 24-hour period. Wastewater and sludge sampling and analysis shall be performed at least annually. The Permittee shall also provide any influent, effluent or sludge monitoring data for nonpriority pollutants which may be causing or contributing to Interference, Pass-Through or adversely impacting sludge quality. Sampling and analysis shall be performed in accordance with the techniques prescribed in 40 CFR Part 136 and amendments thereto.

b. A discussion of Upset, Interference, or Pass-Through incidents, if any, at the treatment plant, which the Permittee knows or suspects were caused by industrial users of the POTW. The discussion shall include the reasons why the incidents occurred, the corrective actions taken and, if known, the name and address of, the industrial user(s) responsible. The discussion shall also include a review of the applicable pollutant limitations to determine whether any additional limitations, or changes to existing requirements, may be necessary to prevent Pass-Through, Interference, or noncompliance with sludge disposal requirements.

c. The cumulative number of industrial users that the Permittee has notified regarding Baseline Monitoring Reports and the cumulative number of industrial user responses.

d. An updated list of the Permittee's industrial users including their names and addresses, or a list of deletions and additions keyed to a previously submitted list. The Permittee shall provide a brief explanation for each deletion. The list shall identify the industrial users subject to federal categorical standards by specifying which set(s) of standards are applicable. The list shall indicate which categorical industries, or specific pollutants from each industry, are subject to local limitations that are more stringent than the federal categorical standards. The Permittee shall also list the noncategorical industrial users that are subject only to local discharge limitations. The Permittee shall characterize the compliance status through the year of record of each industrial user by employing the following descriptions:

i. complied with baseline monitoring report requirements (where applicable);

ii. consistently achieved compliance;

iii. inconsistently achieved compliance;

iv. significantly violated applicable pretreatment requirements as defined by 40 CFR 403.8(f)(2)(vii);

v. complied with schedule to achieve compliance (include the date final compliance is required);

vi. did not achieve compliance and not on a compliance schedule; and

vii. compliance status unknown.

e. A summary of the inspection and sampling activities conducted by the Permittee during the past year to gather information and data regarding the industrial users. The summary shall include:

i. The names and addresses of the industrial users subjected to surveillance and an explanation of whether they were inspected, sampled, or both and the frequency of these activities at each user; and

ii. The conclusions or results from the inspection or sampling of each industrial user.

iii. A summary of the compliance and enforcement activities during the past year. The summary shall include the names and addresses of the industrial users affected by the following actions:

iv. Warning letters or notices of violation regarding the industrial users' apparent noncompliance with federal categorical standards or local discharge limitations. For each industrial user, identify whether the apparent violation concerned the federal categorical standards or local discharge limitations.

v. Administrative orders regarding the industrial users noncompliance with federal categorical standards or local discharge limitations. For each industrial user, identify whether the violation concerned the federal categorical standards or local discharge limitations.

vi. Civil actions regarding the industrial users' noncompliance with federal categorical standards or local discharge limitations. For each industrial user,

identify whether the violation concerned the federal categorical standards or local discharge limitations.

vii. Criminal actions regarding the industrial users' noncompliance with federal categorical standards or local discharge limitations. For each industrial user, identify whether the violation concerned the federal categorical standards or local discharge limitations.

viii. Assessment of monetary penalties. For each industrial user identify the amount of the penalties.

ix. Restriction of flow to the POTW.

x. Disconnection from discharge to the POTW.

xi. A description of any significant changes in operating the pretreatment program which differ from the information in the Permittee's approved Pretreatment Program including, but not limited to, changes concerning: the program's administrative structure, local industrial discharge limitations, monitoring program or monitoring frequencies, legal authority or enforcement policy, funding mechanisms, resource requirements, or staffing levels.

xii. A summary of the annual pretreatment budget, including the cost of pretreatment program functions and equipment purchases.

Duplicate signed copies of these Pretreatment Program reports shall be submitted to the North Coast Regional Water Board and the:

STANDARD MAIL	FEDEX/UPS/ OTHER PRIVATE CARRIERS
State Water Resources Control Board Division of Water Quality c/o Discharge Monitoring Report Processing Center Post Office Box 100 Sacramento, CA 95812-1000	State Water Resources Control Board Division of Water Quality c/o DMR Processing Center 1001 I Street, 15th Floor Sacramento, CA 95814

5. **Sludge Handling and Disposal Activity Reporting.** The Permittee shall submit, as part of its annual report to the Regional Water Board, a description of the Permittee's solids handling, disposal and reuse activities over the previous twelve months. At a minimum, the report shall contain:

   a. Annual sludge production, in dry tons and percent solids;

b. Sludge monitoring results;

c. A schematic diagram showing sludge handling facilities (e.g., digesters, thickeners, drying beds, etc.), if any and a solids flow diagram;

d. Methods of final disposal of sludge:

i. For any portion of sludge discharged to a sanitary landfill, the Permittee shall provide the volume of sludge transported to the land fill, the names and locations of the facilities receiving sludge, the Regional Water Board's WDRs order number for the regulated landfill, and the landfill classification.

ii. For any portion of sludge discharged through land application, the Permittee shall provide the volume of biosolids applied, the date and locations where biosolids were applied, the Regional Water Board's WDRs order number for the regulated discharge, a demonstration that the discharge was conducted in compliance with applicable permits and regulations, and, if applicable, corrective actions taken or planned to bring the discharge into compliance with WDRs.

iii. For any portion of sludge further treated through composting, the Permittee shall provide a summary of the composting process, the volume of sludge composted, and a demonstration and signed certification statement that the composting process and final product met all requirements for Class A biosolids.

e. Results of internal or external third-party audits of the Biosolids Management System, including reported program deficiencies and recommendations, required corrective actions, and a schedule to complete corrective actions.

E. Spill Notification

1. **Spills and Unauthorized Discharges**. Information regarding all spills and unauthorized discharges (except SSOs and recycled water) that may endanger health or the environment shall be provided orally to the Regional Water Board[4] within 24 hours from the time the Permittee becomes aware of the circumstances and a written report shall also be provided within five (5) days of the time the Permittee becomes aware of the circumstances, in accordance with Section V.E of Attachment D.

[4] The contact number of the Regional Water Board during normal business hours is (707) 576-2220. After normal business hours, spill reporting to CalEMA will satisfy the 24 hour spill reporting requirement for the Regional Water Board. The contact number for spill reporting for the CalEMA is (800) 852-7550.

Information to be provided verbally to the Regional Water Board includes:

a. Name and contact information of caller;

b. Date, time and location of spill occurrence;

c. Estimates of spill volume, rate of flow, and spill duration, if available and reasonably accurate;

d. Surface water bodies impacted, if any;

e. Cause of spill, if known at the time of the notification;

f. Cleanup actions taken or repairs made at the time of the notification; and

g. Responding agencies.

2. **Sanitary Sewer Overflows.** Notification and reporting of sanitary sewer overflows is conducted in accordance with the requirements of Order No. 2006-0003-DWQ (Statewide General WDRs for Sanitary Sewer Systems), which is not incorporated herein by reference, and any revisions thereto.

3. **Recycled Water Spills.** Notification and Reporting of spills and unauthorized discharges of recycled water discharged in or on any waters of the State, as defined in Water Code section 13050, shall be conducted in accordance with the following:

a. Tertiary Recycled Water[5]

i. For unauthorized discharges of 50,000 gallons or more of tertiary recycled water, the Permittee shall immediately notify the Regional Water Board as soon as (a) the Permittee has knowledge of the discharge or probable discharge, (b) notification is possible, and (c) notification can be provided without substantially impeding cleanup or other emergency measures.

ii. For unauthorized discharges of more than 1,000 gallons, but less than 50,000 gallons of tertiary recycled water, the Permittee shall notify the Regional Water Board as soon as possible, but no longer than three days after becoming aware of the discharge.

[5] Tertiary Recycled Water means "disinfected tertiary 2.2 recycled water" as defined by CDPH or wastewater receiving advanced treatment beyond disinfected tertiary 2.2 recycled water.

ATTACHMENT F – FACT SHEET

Table of Contents

I. Permit Information F-3
II. Facility Description F-4
A. Description of Wastewater and Sludge Treatment or Controls F-5
B. Discharge Points and Receiving Waters F-7
C. Summary of Existing Requirements and Self-Monitoring Report (SMR) Data F-9
D. Compliance Summary F-11
E. Planned Changes F-11
III. Applicable Plans, Policies, and Regulations F-12
A. California Environmental Quality Act (CEQA) F-12
B. State and Federal Regulations, Policies, and Plans F-13
C. Impaired Water Bodies on CWA 303(d) List F-17
D. Other Plans, Policies and Regulations F-18
IV. Rationale For Effluent Limitations and Discharge Specifications F-20
A. Discharge Prohibitions F-20
B. Technology-Based Effluent Limitations F-24
C. Water Quality-Based Effluent Limitations (WQBELs) F-27
D. Final Effluent Limitations F-52
E. Interim Effluent Limitations – Not Applicable F-59
F. Land Discharge Specifications F-59
G. Reclamation Specifications F-59
H. Other Requirements F-62
V. Rationale for Receiving Water Limitations F-63
A. Surface Water F-63
B. Groundwater F-64
VI. Rationale for Monitoring and Reporting Requirements F-64
A. Influent Monitoring F-64
B. Effluent Monitoring F-64
C. Whole Effluent Toxicity Testing Requirements F-66
D. Land Discharge Monitoring Requirements F-66
E. Reclamation Monitoring Requirements F-66
F. Receiving Water Monitoring F-67
G. Other Monitoring and Reporting Requirements F-68
VII. Rationale for Provisions F-68

A. Standard Provisions F-68
B. Special Provisions F-69
VIII. Public Participation F-73
A. Notification of Interested Parties F-74
B. Written Comments F-74
C. Public Hearing F-74
D. Waste Discharge Requirements Petitions F-75
E. Information and Copying F-75
F. Register of Interested Persons F-75
G. Additional Information F-76

List of Tables

Table F-1. Facility Information F-3
Table F-2. Historic Effluent Limitations and Monitoring Data – M-001 ..... F-9
Table F-2b. Historic Effluent Limitations and Monitoring Data – M-005 ..... F-10
Table F-2c. Historic Effluent Limitations and Monitoring Data – M-002 and M-003 ..... F-11
Table F-3. Basin Plan Beneficial Uses F-14
Table F-4. USEPA Recommended Biostimulatory Substance Criteria F-31
Table F-5. California Recommended Biostimulatory Substance Criteria F-31
Table F-6. Summary of RPA Results – Discharge Points 006A, 006B, 012A(1), and 015 ..... F-42
Table F-7. Summary of RPA Results – Discharge Points 012A(2) and 012B F-43
Table F-8. Determination of Final WQBELs Based on Human Health Criteria F-46
Table F-9. Summary of Numeric WQBELs F-46
Table F-10. Whole Effluent Chronic Toxicity Monitoring Results F-49
Table F-11. Summary of Final Technology-Based Effluent Limitations F-58
Table F-12. Summary of Final Numeric Water Quality-Based Effluent Limitations F-58
Table F-13. Summary of RPA for Priority Pollutants - Discharge Points 006A, 006B, 012A(1), and 015 ..... F-77
Table F-14. Summary of RPA for Priority Pollutants - Discharge Points 012A(2), 012B F-83

ATTACHMENT F – FACT SHEET

As described in section II of this Order, the Regional Water Board incorporates this Fact Sheet as findings of the Regional Water Board supporting the issuance of this Order. This Fact Sheet includes the legal requirements and technical rationale that serve as the basis for the requirements of this Order.

This Order has been prepared under a standardized format to accommodate a broad range of discharge requirements for dischargers in California. Only those sections or subsections of this Order that are specifically identified as "not applicable" have been determined not to apply to this Permittee. Sections or subsections of this Order not specifically identified as "not applicable" are fully applicable to this Permittee.

I. PERMIT INFORMATION

The following table summarizes administrative information related to the City of Santa Rosa Subregional Water Reclamation System.

Table F-1. Facility Information

WDID	1B830990SON
Permittee	City of Santa Rosa
Name of Facility	Santa Rosa Subregional Water Reclamation System
Facility Address	4300 Llano Road
	Santa Rosa, CA 95407
	Sonoma County
Facility Contact, Title and Phone	David Guhin, Director of Utilities, (707) 543-4299
Authorized Person(s) to Sign and Submit Reports	David Guhin, Jennifer Burke (Deputy Director-Environmental Services)
Mailing Address	69 Stony Circle, Santa Rosa, CA 95401
Billing Address	Same as Mailing Address
Type of Facility	Publicly Owned Treatment Works (POTW)
Major or Minor Facility	Major
Threat to Water Quality	1
Complexity	A
Pretreatment Program	Yes
Reclamation Requirements	Producer
Facility Permitted Flow	25.9 million gallons per day (MGD) (average daily dry weather flow)
Facility Design Flow (Existing)	21.34 million gallons per day (MGD) (average dry weather design flow) 64 MGD (peak weekly wet weather design flow) 47.3 MGD (peak monthly wet weather design flow)
Watershed	Russian River Hydrologic Unit, Guerneville Hydrologic Subarea
Receiving Waters	Santa Rosa Creek, unnamed ditch tributary to the Laguna de Santa Rosa, and the Laguna de Santa Rosa, all tributary to the Russian River
Receiving Water Type	Inland surface water

A. The City of Santa Rosa (hereinafter Permittee) is the owner and operator of the Santa Rosa Subregional Water Reclamation System (hereinafter Subregional System), a POTW, as shown on Attachment B.

For the purposes of this Order, references to the "discharger" or "permittee" in applicable federal and state laws, regulations, plans, or policy are held to be equivalent to references to the Permittee herein.

B. The Subregional System discharges wastewater to Santa Rosa Creek, an unnamed ditch tributary to the Laguna de Santa Rosa, and the Laguna to Santa Rosa, all of which are tributary to the Russian River, and all of which are waters of the United States. These discharges are currently regulated by WDR Order No. R1-2006-0045, which was adopted on September 20, 2006, amended by Order No. R1-2008-0091, and expired on November 9, 2011. The Permittee is also regulated by MRP No. R1-2006-0045, which was adopted on September 20, 2006. The terms and conditions of the current Order and MRP have been automatically continued and remain in effect until new WDRs and a NPDES permit are adopted pursuant to this Order.

C. The Permittee filed a Report of Waste Discharge (ROWD) and submitted an application for renewal of its WDRs and NPDES permit on March 17, 2011. The permit application was deemed complete on May 30, 2012.

II. FACILITY DESCRIPTION

The Permittee owns and operates a wastewater collection, treatment, and disposal facility and provides sewerage service to a population of approximately 213,223, including residential, commercial, and institutional customers. The Subregional System also accepts leachate from the Sonoma County Central Landfill, septage from commercial septage haulers, and discharges from groundwater cleanup sites. The Permittee provides wastewater treatment and disposal services for residences, businesses, and industries within the Santa Rosa area and provides service to the communities of Cotati, Rohnert Park, Sebastopol, and the unincorporated South Park County Sanitation District.

The Subregional System currently has design treatment capacities of 21.3 MGD (average daily dry weather flow), 64 MGD (peak weekly wet weather flow), and 47.3 MGD (peak monthly wet weather flow). In the ROWD, the Permittee stated that future plant expansion, disposal, and reuse projects may lead to increased flows from the Subregional System. These projects include the Laguna Plant Upgrade Project, Geysers Expansion Project, the Santa Rosa Urban Reuse Project, and the Discharge Compliance Project. The Permittee envisions that increased flows would be for recycling and reuse, therefore, discharge volumes to surface waters would not increase above currently permitted levels. The Permittee has identified portions of the Incremental Recycled Water Program Master Plan (August 2007) and the Discharge Compliance Project EIR (December 2008) that demonstrate that permitting

wastewater flows to the Subregional System above 21.3 MGD (ADWF) up to 25.9 MGD would not result in discharges to surface water above the currently permitted level. As a condition of acceptance by the Regional Water Board of the higher permitted ADWF, the Permittee is required to submit to the Regional Water Board an engineering report demonstrating that treatment and/or total reclamation capacity has been added to the Subregional System that would allow the Subregional System to accept wastewater flows above the current design treatment capacity without increasing discharge flow to surface water.

A. Description of Wastewater and Sludge Treatment or Controls

1. Collection System

The Permittee's collection system consists of 582 miles of gravity sewers ranging in size from 4 to 66 inches, 5.3 miles of pressure sewers, and 18 pumping stations. In addition to the wastewater collection system owned and operated by the Permittee, satellite wastewater collection systems individually owned, operated and maintained by the Cities of Cotati, Rohnert Park, and Sebastopol convey wastewater from those communities to the Subregional System.

2. Wastewater Treatment

The Subregional System currently has design treatment capacities of 21.3 MGD (average daily dry weather flow), 64 MGD (peak weekly wet weather flow), and 47.3 MGD (peak monthly wet weather flow). The current treatment system consists of grit removal in aerated grit chambers, sludge and scum removal in primary sedimentation tanks, biological secondary treatment (activated sludge) with alum coagulation, flocculation, and clarification followed by tertiary filtration and ultraviolet light disinfection that meet title 22 guidelines or as otherwise specified in this Order.

During the discharge season (October 1 – May 14), wastewater is permitted to be discharged from Discharge Points 006A, 006B, 012A(1), 012A(2), 012B, and 015 to the Laguna de Santa Rosa, an unnamed ditch tributary to the Laguna de Santa Rosa, and Santa Rosa Creek, waters of the United States and tributary to the Russian River within the Russian River Hydrologic Unit (114.00). The Subregional System has a distribution trunk line which allows effluent to either be directly discharged, mixed with Delta Pond storage water, or stored in the Delta Pond. Discharge Point 012A from the previous Order has been subdivided to Discharge Points 012A(1) and 012A(2) to account for this change. Source water for Discharge Point 012A(1) comes directly from Discharge Point 015 while the source water for Discharge Point 012A(2) is Delta Pond storage water. Therefore, wastewater characteristics for Discharge Points 012A(1) and 012A(2) will differ and have resulted in separate analysis with respect to determining reasonable potential as described in this Fact Sheet. A multiport diffuser was installed at Discharge Point 012B during the term of the

previous permit. The diffuser extends 37 feet from the 48 inch outfall in Santa Rosa Creek. The Permittee's *Discharge Management Plan* states that discharges will preferentially occur at Discharge Point 012B to avoid discharges to the Laguna de Santa Rosa.

3. Effluent Storage

Advanced treated effluent is discharged to an effluent storage pond system prior to discharge to the water reclamation system or the surface water discharge system. The pond system consists of Brown Pond; Meadow Lane Ponds A, B, C, and D; and Delta Pond, all of which are owned, operated, and maintained by the Permittee. The combined maximum capacity of the existing storage ponds is 1,650 million gallons. The storage ponds allow the Permittee to control the timing, location, and volume of discharge to protect beneficial uses of the receiving water and provide a source of recycled water during the discharge prohibition period.

4. Recycled Water

During the discharge prohibition season from May 15 through September 30, advanced treated wastewater is reclaimed. The Permittee distributes a portion of advanced treated wastewater to the Geysers Recharge project at Discharge Point 001 for use by the current owner of the Geysers, Calpine Corporation, for recharge of the steamfields to enhance steam production for electrical energy generation. The total volume of treated wastewater pumped to the Geysers is stipulated by contract between the Permittee and Calpine Corporation, and is approximately 12.6 MGD. During the term of the previous permit, the Permittee and the Town of Windsor entered into an agreement to permit the Town to also convey treated wastewater to the Geysers via the Geysers Pipeline.

Reclaimed water is also used for irrigation for agricultural and urban use. A distribution system (Discharge Point 002) currently carries recycled water from the Laguna Plant for golf course irrigation, urban landscape irrigation, and agricultural irrigation on about 6,274 acres of land located primarily in the Santa Rosa Plain (Attachment G). Reclaimed water from urban landscape irrigation is diverted to the West College storage reservoirs prior to distribution to transmission and distribution main lines and laterals that serve urban customers. Reclaimed water is also used for other purposes, including cooling towers, toilet flushing, construction dust control, and emergency firefighting. Urban irrigation systems currently are in place throughout the City of Santa Rosa, the City of Rohnert Park and Sonoma State University. Agricultural use areas for which the Permittee provides reclaimed water include approximately 4,300 acres for pasture or fodder crops, 1,400 acres of vineyards, and 120 acres of special-use areas. In the past, the Permittee operated and distributed reclaimed water from the Oakmont Wastewater Treatment Plant to the

Oakmont Golf Club for golf course irrigation. On July 18, 2012, Miles Ferris, Director of Utilities for the City of Santa Rosa, submitted a letter to the Regional Water Board detailing a project where the Oakmont Wastewater Treatment Plant is not to be operated for a period of three consecutive years. All Oakmont wastewater will be treated at the Subregional System's Laguna Treatment Plant.

5. **Sludge and Biosolids Handling**

   Sludge generated during the treatment process is thickened, anaerobically digested, dewatered using belt filters and polymer addition, and beneficially used as soil amendment (biosolids).

B. Discharge Points and Receiving Waters

1. The Subregional System's Laguna Treatment Plant is located at the NE ¼ of Section 17, T6N, R8W, MDB&M. A map of the area is shown in Attachment B to this Order.

2. The Permittee discharges advanced treated wastewater to an on-site effluent storage pond system, prior to discharge to the reclamation system or to surface water. The description of the ponds and the surface water discharges is provided below.

   Meadow Lane Pond D. The discharge at Discharge Point 006A is located at the southeast corner of Pond D and is through a pipe into a square concrete flume that empties directly into the ordinary high water mark of the Laguna de Santa Rosa. The upstream receiving water monitoring location is located in the Laguna de Santa Rosa, 50-100 feet upstream of Discharge Point 006A.

   Meadow Lane Pond D. The discharge at Discharge Point 006B is through a 36-inch pipe located at the northwest corner of the D-Pond. Treated effluent is discharged from the storage pond into a rip-rap and concrete lined trapezoidal flume/ditch that empties into the ordinary high water mark of the Laguna de Santa Rosa. Upstream conditions are currently measured in the Laguna de Santa Rosa, at Monitoring Location RSW-006BU-L, which is located approximately 1,500 feet upstream of the discharge location, and in Colgan Creek upstream of the confluence with the Laguna de Santa Rosa at Monitoring Location RSW-006BU-C.

   Delta Pond. Discharge Point 012A(1) is wastewater that is discharged directly to Santa Rosa Creek via the distribution trunk line.

   Delta Pond. Discharge Point 012A(2) is a discharge from the blending valve on the 24-inch pipeline located mid-way along the north side of Delta Pond to the ordinary high water mark of Santa Rosa Creek. The blending valves were constructed along with the Delta pond in 1983. During this time period, the West College wastewater treatment plant was operational during wet weather events. The effluent from the

West College plant was of lower quality than that of the Laguna Treatment Plant and plans were to blend the lower quality West College effluent with either stored water in the Delta pond or treated wastewater pumped directly from the Laguna plant. The West College plant has not been utilized since the 1988 upgrades to the Laguna Treatment Plant. During the past 25 years the 12A discharge has only been used as an alternate Delta pond discharge point and the last time it was used was over 10 years ago. It is currently possible to pump water directly from the Laguna Treatment Plant (LTP) plant to Discharge Point 12A(1), blend water from LTP with Delta Pond water to discharge (Discharge Point 12A(2), or discharge solely Delta Pond water from Discharge Point 12A(2).

Delta Pond. Discharge at Discharge Point 012B is via a 48-inch discharge pipe fitted with a 37 foot, multiport diffuser directly to the confluence of the Laguna de Santa Rosa and Santa Rosa Creek. Upstream receiving water is monitored at two locations, each approximately 75 feet upstream of the effluent discharge point. Discharge from Delta Pond will preferentially occur via Discharge Point 012B.

Laguna Treatment Plant. Discharge from Discharge Point 015 is a discharge pipe that discharges directly into a square concrete flume that drains to a constructed trapezoidal ditch that conveys treated wastewater flow from the WWTF or to the Meadow Lane Pond where it is either reclaimed or transferred to the Delta Pond. Flow in the ditch is transported approximately 130 feet where it discharges into the Laguna de Santa Rosa. The upstream receiving water monitoring location is located in the Laguna de Santa Rosa approximately 100 feet upstream of Llano Bridge Road.

Discharge Points 003 and 014 were authorized by the previous permit, but are not retained in this Order, because the Subregional System no longer uses these outfalls and therefore did not request authorization to discharge at these locations.

3. Advanced treated wastewater is discharged from the storage pond system to Santa Rosa Creek, an unnamed ditch tributary to the Laguna de Santa Rosa, and the Laguna de Santa Rosa, waters of the United States and tributary to the Russian River, during the allowed discharge period from October 1 to May 14. The rate of discharge is governed by flow conditions in the Russian River monitored at Hacienda Bridge and is limited to five percent of the flow of the Russian River, as provided by the Basin Plan, where exceptions to the Basin Plan's one percent flow limitation are allowed provided that the Permittee meets conditions described in the Basin Plan (Section 4 Implementation Plans, North Coastal Basin).

4. During the dry weather season (May 15 to September 30), and other periods as allowed under this Order, advanced treated wastewater from effluent storage is reclaimed for irrigation on authorized use sites generally referred to as Discharge Point 002. The Permittee also provides reclaimed water to the Geysers Recharge

Project year round for the use of the current owner of the Geysers, Calpine Corporation, for recharge of steamfields used to generate electricity. The location for reclaimed water transferred to The Geysers Recharge Project is generally referred to as Discharge Point 001.

C. Summary of Existing Requirements and Self-Monitoring Report (SMR) Data

1. Surface water discharges from the Subregional System during the permit term of WDR Order No. R1-2006-0045 occurred solely from Discharge Point 012B. No discharges occurred from Discharge Points 015, 06A, 06B, or 012A. Effluent limitations contained in WDR Order No. R1-2006-0045 for discharges from Discharge Point 012B (Monitoring Location M-005) and representative monitoring data from the term of WDR Order No. R1-2006-0045 are as follows:

Table F-2. Historic Effluent Limitations and Monitoring Data – M-001

Parameter	Units	Effluent Limitations			Monitoring Data (From September 2006 through May 2011)	
		Average Monthly	Average Weekly	Maximum Daily	Reported Value of Highest Violation[1]	Number of Violations
BOD_5	mg/L	10	15	--	[2]	0
	lbs./day (dry-weather)[3]	1780	2670	--	[2]	0
	lbs./day (maximum wet-weather)[3]	3945	8006	--	[2]	0
	% Removal	85	--	--	[2]	0
TSS	mg/L	10	15	--	[2]	0
	lbs./day (dry-weather)[3]	1780	2670	--	[2]	0
	lbs./day (maximum wet-weather)[3]	3945	8006	--	[2]	0
	% Removal	85	--	--	[2]	0
Total Coliform Organisms	MPN/100 mL	23 [4]	2.2 [5]	240 [6]	3, (7-day median) >1,600, (daily max.)	5
pH	standard units	6.0 – 9.0			[2]	0
Nitrate	mg/L	10.0	--	--	[2]	0

Table F-2. Historic Effluent Limitations and Monitoring Data – M-001

Parameter	Units	Effluent Limitations			Monitoring Data (From September 2006 through May 2011)	
		Average Monthly	Average Weekly	Maximum Daily	Reported Value of Highest Violation[1]	Number of Violations

Table Notes:
1. In the previous Order, Monitoring Location M-001 was the monitoring location for Discharge Point 015 and for measurement of BOD_5, TSS, pH, and total coliform organisms for comparison to TBELs. No discharges to surface waters occurred at Discharge Point 015 during the term of the previous permit; however, monitoring was conducted for BOD_5, TSS, pH, and total coliform organisms.
2. There were no violations for these constituents during the previous permit term.
3. Mass-based effluent limitations are based on the wastewater treatment facility (WWTF) average dry-weather design flow of 21.34 MGD. During wet-weather periods when the flow rate into the WWTF exceeds the dry-weather design flow, the mass emission limitations shall be calculated using monthly and weekly peak design flow of 47.3 MGD and 64 MGD).
4. The number of coliform bacteria shall not exceed a Most Probable Number (MPN) of 23 per 100 milliliters in more than one sample in any 30-day period.
5. The median concentration shall not exceed a MPN of 2.2 per 100 milliliters, using bacteriological results of the last 7 days for which analyses have been completed. Compliance shall be determined as a rolling 7-day median.
6. No sample shall exceed an MPN of 240 total coliform bacteria per 100 milliliters.

Table F-2b. Historic Effluent Limitations and Monitoring Data – M-005

Parameter	Units	Effluent Limitations			Monitoring Data (From September 2006 through May 2011)	
		Average Monthly	Average Weekly	Maximum Daily	Reported Highest Value	Number of Violations
Copper	µg/L	Floating	---	Floating	2.9	0
Lead	µg/L	Floating	---	Floating	0.27 DNQ	0
Nickel	µg/L	Floating	---	Floating	6.4	0
Cyanide	µg/L	3.05	---	9.23	ND	0
Nitrate	mg/L	10	---	---	8.99	0

Table Notes:
1. In the previous Order, Monitoring Location M-005 was the monitoring location for Discharge Point 012B.

Table F-2c. Historic Effluent Limitations and Monitoring Data – M-002 and M-003

Parameter	Units	Effluent Limitations			Monitoring Data (From September 2006 through May 2011) [1]	
		Average Monthly	Average Weekly	Maximum Daily	Reported Highest Value	Number of Violations
Copper	µg/L	Floating	---	Floating	[2]	0
Lead	µg/L	Floating	---	Floating	[2]	0
Nickel	µg/L	Floating	---	Floating	[2]	0
Cyanide	µg/L	3.05	---	9.23	[2]	0
Nitrate	mg/L	10	---	---	[2]	0

Table Notes:
1. In the previous Order, Monitoring Location M-002 and M-003 were the monitoring location for Discharge Points 006A and 006B, respectively.
2. There were no discharges from Discharge Points 006A and 006B during the previous permit term.

D. Compliance Summary

1. Violations Summary

Five exceedances of numeric effluent limitations were recorded during the term of the previous permit, three exceedances of the total coliform bacteria 7-day median limit of 2.2 MPN/100 mL and two exceedances were recorded for exceedances of the maximum daily limitation of 240 MPN/100 mL for total coliform bacteria. In response to the exceedances, the Permittee cleaned the UV channels and the discharge returned to consistent compliance.

2. Enforcement Action Summary

The Regional Water Board has issued several enforcement orders during the term of the previous permit, including Administrative Civil Liability Complaint R1-2010-0057, and Administrative Civil Liability Order Nos. R1-2011-0005 and R1-2010-0075. These orders were issued to address numerous violations of permit conditions, including deficient monitoring and other violations of conditions contained in WDR Order No. R1-2006-0045.

E. Planned Changes

The ROWD identified plans to improve the cogeneration plant system, including the digester gas blending system, replacing cogeneration engines, and construction of a new cogeneration engine building.

In addition, the Permittee plans to accept advanced treated wastewater from the Town of Windsor to deliver to the Geysers Recharge Project through the Permittee's existing pipeline. The minimum delivery of advanced treated wastewater from the Town of Windsor is 0.53 MGD.

III. APPLICABLE PLANS, POLICIES, AND REGULATIONS

The requirements contained in this Order are based on the requirements and authorities described in this section. This section provides supplemental information, where appropriate, for the plans, policies, and regulations relevant to the discharge.

A. California Environmental Quality Act (CEQA)

Pursuant to Water Code section 13389, a portion of this action to adopt this Order is exempt from the provisions of CEQA, Public Resources Code sections 21100 through 21177. This exemption from CEQA applies only to the Regional Water Board's adoption of those portions of this Order that regulate NPDES discharges.

This action also involves the renewal of a Master Reclamation Permit, which is subject to CEQA. The Master Reclamation Permit portion of this Order includes both the approval of reclamation and recycling discharges authorized during the prior permit term, as well as the approval of an expansion of use of reclaimed and recycled water consistent with the Santa Rosa Urban Reuse Project. The Permittee's extensive environmental review for the Santa Rosa Urban Reuse Project is contained in the 2003 Master Plan Environmental Impact Report (EIR) and the 2004 Addendum (2004 Certified EIR) and the 2007 Master Plan Update and EIR Addendum (2007 Addendum), approved by the Permittee in March 2004 and December 2007. The action to approve those previously authorized discharges is exempt from CEQA pursuant to CEQA Guidelines section 15301 because this action includes the permitting of existing reclamation and recycling facilities.

Regarding the approval of the expanded use of reclaimed and recycled water consistent with the Santa Rosa Urban Reuse Project, pursuant to CEQA Guidelines section 15096, as a responsible agency, the Regional Water Board complies with CEQA by considering the environmental documents prepared by the lead agency (in this case, the Permittee) and reaching its own conclusions regarding whether and how to approve the project. Accordingly, the Regional Water Board has considered the 2004 Certified EIR and the 2007 Addendum that the Permittee has submitted for the Santa Rosa Urban Reuse Project and determined that any and all impacts to water quality associated with the increased use of reclaimed and recycled water will be less than significant.

B. State and Federal Regulations, Policies, and Plans

1. **Water Quality Control Plans.** The Regional Water Quality Control Board (Regional Water Board) adopted a *Water Quality Control Plan for the North Coast Region* (hereinafter Basin Plan) that designates beneficial uses, establishes water quality objectives, and contains implementation programs and policies to achieve those objectives for all waters addressed through the plan. In addition, the Basin Plan implements State Water Resources Control Board (State Water Board) Resolution No. 88-63, which establishes State policy that all waters, with certain exceptions, should be considered suitable or potentially suitable for municipal or domestic supply.

   In 1972, the State Water Board adopted a uniform list of beneficial uses, including descriptions, to be applied throughout all basins in the State. The list was updated in 1996. In addition to the beneficial uses identified on the statewide list, the Regional Water Board has identified the following beneficial uses of waters of the State that must be protected against water quality degradation: Wetland Habitat (WET); Water Quality Enhancement (WQE); Flood Peak Attenuation/Flood Water Storage (FLD); and Subsistence Fishing (FISH).

   In addition, there is evidence to conclude that the following are existing beneficial uses of the Laguna de Santa Rosa and Santa Rosa Creek:

   Wetland Habitat (WET) and Water Quality Enhancement (WQE). The Laguna de Santa Rosa is described by the Laguna Foundation as the "largest freshwater wetlands complex on the northern California coast...draining a 254-square-mile watershed which encompasses nearly the entire Santa Rosa Plain." It further describes the Laguna de Santa Rosa as "a unique ecological system covering more than 30,000 acres; a mosaic of creeks, open water, perennial marshes, seasonal wetlands, riparian forests, oak woodlands, and grassland." In addition, the Laguna de Santa Rosa Wetland Complex was designated by the Ramsar Convention in 2011 as a Wetland of International Significance because of the ecosystem services the Laguna de Santa Rosa provides.

   Flood Peak Attenuation/FloodWater Storage (FLD). According to the Sonoma County's Hazard Mitigation Plan (adopted in 2011), the Laguna de Santa Rosa acts as "huge reservoir, storing up to 80,000 acre-feet of water." Federal Emergency Management Agency (FEMA) and other publicly available maps clearly identify the Laguna floodplain, which extend from the City of Cotati in the south to the Town of Windsor in the north, and includes portions of Santa Rosa Creek. Flood control is also provided by Santa Rosa Creek; a primary function of Spring Lake and Lake Ralphine, located off Santa Rosa Creek, is to provide downstream flow and volume attenuation through storage of flood flows generated in the Santa Rosa Creek watershed.

Subsistence Fishing (FISH): Fishing is a historic and existing use of the Laguna de Santa Rosa. In addition to sport fishing, it is logical to assume that fish caught in the Laguna de Santa Rosa is consumed to supplement the diet of local and transient residents.

The beneficial uses applicable in this Order to Laguna de Santa Rosa, Santa Rosa Creek, and the unnamed ditch tributary to the Laguna de Santa Rosa are listed in Table F-3.

Table F-3. Basin Plan Beneficial Uses

Discharge Point	Receiving Water Name	Beneficial Use(s)
006A, 006B, 015	Laguna de Santa Rosa (Laguna Hydrologic Subarea – 114.21)	Existing: • Agricultural Supply (AGR) • Industrial Service Supply (IND) • Ground Water Recharge (GWR) • Freshwater Replenishment (FRSH) • Navigation (NAV) • Hydropower Generation (POW) • Water Contact Recreation (REC-1) • Non-Contact Water Recreation (REC-2) • Commercial and Sport Fishing (COMM) • Warm Freshwater Habitat (WARM) • Cold Freshwater Habitat (COLD) • Wildlife Habitat (WILD) • Preservation of Rare, Threatened, or Endangered Species (RARE) • Migration of Aquatic Organisms (MIGR) • Spawning, Reproduction, and/or Early Development (SPWN) • Water Quality Enhancement (WQE) • Wetland Habitat (WET) • Flood Attenuation (FLD) • Subsistence Fishing (FISH) Potential: • Municipal and Domestic Supply (MUN) • Industrial Process Supply (PRO) • Shellfish Harvesting (SHELL) • Aquaculture (AQUA)
012A(1), 012A(2), 012B	Santa Rosa Creek (Santa Rosa Hydrologic Subarea – 114.21)	Existing: • Municipal and Domestic Supply (MUN) • Agricultural Supply (AGR) • Industrial Service Supply (IND) • Ground Water Recharge (GWR) • Navigation (NAV) • Water Contact Recreation (REC-1) • Non-Contact Water Recreation (REC-2) • Commercial and Sport Fishing (COMM) • Warm Freshwater Habitat (WARM)

Table F-3. Basin Plan Beneficial Uses

Discharge Point	Receiving Water Name	Beneficial Use(s)
		• Cold Freshwater Habitat (COLD) • Wildlife Habitat (WILD) • Preservation of Rare, Threatened, or Endangered Species (RARE) • Migration of Aquatic Organisms (MIGR) • Spawning, Reproduction, and/or Early Development (SPWN) • Flood Attenuation (FLD) <u>Potential:</u> • Industrial Process Supply (PRO) • Hydropower Generation (POW) • Shellfish Harvesting (SHELL) • Aquaculture (AQUA)

In addition to the beneficial uses set out in the Basin Plan, there are several implementation plans that include actions intended to meet water quality objectives and protect beneficial uses of the North Coastal Basin. For the Russian River and its tributaries, no point source waste discharges are allowed from May 15 through September 30 and during all other periods when the waste discharge flow is greater than one percent of the receiving stream's flow, except where exceptions have been granted and set forth in NPDES permits for individual dischargers. For municipal waste discharged from October 1 through May 14, the discharge must be of advanced treated wastewater, and must meet a median coliform level of 2.2 MPN per 100 milliliters (mL).

Requirements of this Order implement the Basin Plan.

2. **National Toxics Rule (NTR) and California Toxics Rule (CTR).** USEPA adopted the NTR on December 22, 1992, and later amended it on May 4, 1995, and November 9, 1999. About forty criteria in the NTR applied in California. On May 18, 2000, USEPA adopted the CTR. The CTR promulgated new toxics criteria for California and, in addition, incorporated the previously adopted NTR criteria that were applicable in the state. The CTR was amended on February 13, 2001. These rules contain water quality criteria for priority pollutants.

3. **State Implementation Policy.** On March 2, 2000, the State Water Board adopted the *Policy for Implementation of Toxics Standards for Inland Surface Waters, Enclosed Bays, and Estuaries of California* (State Implementation Policy or SIP). The SIP became effective on April 28, 2000, with respect to the priority pollutant criteria promulgated for California by the USEPA through the NTR and to the priority pollutant objectives established by the Regional Water Board in the Basin Plan. The SIP became effective on May 18, 2000, with respect to the priority pollutant criteria promulgated by the

USEPA through the CTR. The State Water Board adopted amendments to the SIP on February 24, 2005, that became effective on July 13, 2005. The SIP establishes implementation provisions for priority pollutant criteria and objectives and provisions for chronic toxicity control. Requirements of this Order implement the SIP.

4. **Compliance Schedules and Interim Requirements.** The provision in section 2.1 of the SIP that allowed for the use of compliance schedules and interim limitations in an NPDES permit for CTR constituents ended on May 18, 2010. Based on a Permittee's request and demonstration that it is infeasible to comply with an effluent limitation derived from a CTR criterion, compliance schedules may be allowed in a cease and desist order or time schedule order adopted by the Regional Water Board.

   The State Water Board adopted Resolution No. 2008-0025 on April 15, 2008, titled Policy for Compliance Schedules in National Pollutant Discharge Elimination System Permits, which includes compliance schedule policies for pollutants that are not addressed by the SIP. This Policy became effective on August 27, 2008.

   This Order does not include a compliance schedule.

5. **Alaska Rule.** On March 30, 2000, USEPA revised its regulation that specifies when new and revised state and tribal water quality standards (WQS) become effective for CWA purposes (40 CFR § 131.21, 65 Fed. Reg. 24641 (April 27, 2000)). Under the revised regulation (also known as the Alaska Rule), new and revised standards submitted to USEPA after May 30, 2000, must be approved by USEPA before being used for CWA purposes. The final rule also provides that standards already in effect and submitted to USEPA by May 30, 2000, may be used for CWA purposes, whether or not approved by USEPA.

6. **Antidegradation Policy.** Section 131.12 requires that the state water quality standards include an antidegradation policy consistent with the federal policy. The State Water Board established California's antidegradation policy in State Water Board Resolution No. 68-16. Resolution No. 68-16 incorporates the federal antidegradation policy where the federal policy applies under federal law. Resolution No. 68-16 requires that existing water quality be maintained unless degradation is justified based on specific findings. The Regional Water Board's Basin Plan implements, and incorporates by reference, both the State and federal antidegradation policies. The permitted discharge must be consistent with the antidegradation provision of section 131.12 and State Water Board Resolution No. 68-16. As discussed in detail in section IV.D.2 of this Fact Sheet, the permitted discharge is consistent with the antidegradation provision of 40 CFR 131.12 and State Water Board Resolution No. 68-16.

7. **Anti-Backsliding Requirements.** Sections 402(o)(2) and 303(d)(4) of the CWA and federal regulations at title 40, Code of Federal Regulations[1] (40 CFR) section 122.44(l) prohibit backsliding in NPDES permits. These anti-backsliding provisions require that effluent limitations in a reissued permit must be as stringent as those in the previous permit, with some exceptions in which limitations may be relaxed. Effluent limitations contained in this Order are at least as stringent as in the previous Order, with the exception of the final effluent limitation for total nitrogen, where the final limitation was made less stringent because new information about the nature of the impairment of the Laguna de Santa Rosa that was not available at the time when the limitation was established. In addition, effluent limitations for some metals and the final effluent limitation for nitrate nitrogen were removed due to a finding of no reasonable potential to exceed applicable water quality objectives. Mass-based effluent limitations for BOD_5 and TSS contained in the previous Order were also removed. These exceptions are discussed in detail in section IV.D.1 of this Fact Sheet.

8. **Endangered Species Act.** This Order does not authorize any act that results in the taking of a threatened or endangered species or any act that is now prohibited, or becomes prohibited in the future, under either the California Endangered Species Act (Fish and Game Code sections 2050 to 2097) or the Federal Endangered Species Act (16 U.S.C.A. sections 1531 to 1544). This Order requires compliance with effluent limits, receiving water limits, and other requirements to protect the beneficial uses of waters of the State. The Permittee is responsible for meeting all requirements of the applicable Endangered Species Act.

C. Impaired Water Bodies on CWA 303(d) List

Section 303(d) of the federal CWA requires states to identify waterbodies that do not meet water quality standards and are not supporting their beneficial uses after implementation of technology-based effluent limitations on point sources. Each state must submit an updated list, the 303(d) List of Impaired Waterbodies, to USEPA. In addition to identifying the waterbodies that are not supporting beneficial uses, the 303(d) list also identifies the pollutant or stressor causing impairment and establishes a schedule for developing a control plan to address the impairment. Placement on the 303(d) list generally triggers development of a pollution control plan called a total maximum daily load (TMDL) for each water body and associated pollutant/stressor on the list. TMDLs establish the maximum quantity of a given pollutant that can be added to a water body from all sources without exceeding the applicable water quality standard for that pollutant and determine wasteload allocations (the portion of a TMDL allocated to existing and future point sources) for point sources and load allocations (the portion of a TMDL attributed to existing and future nonpoint sources) for nonpoint sources.

[1] All further statutory references are to title 40 of the Code of Federal Regulations unless otherwise indicated.

On October 11, 2011, the USEPA provided final approval of the 303(d) list of impaired water bodies prepared by the State. The list identifies the entire Russian River watershed, including the Laguna de Santa Rosa, Santa Rosa Creek, and Mark West Creek hydrologic subareas (HSAs), as impaired by excess sediment and elevated water temperatures. In addition, Santa Rosa Creek, the Laguna de Santa Rosa, and portions of the Lower Russian River are identified as impaired by pathogenic indicator bacteria, and the Laguna de Santa Rosa is identified as impaired by low dissolved oxygen, nitrogen, phosphorus, and mercury.

TMDLs for nitrogen, ammonia, and dissolved oxygen were approved by the USEPA in 1995 in the form of the "Waste Reduction Strategy for the Laguna de Santa Rosa." The Waste Reduction Strategy called for the reduction of nitrogen loads to address ammonia toxicity concerns along the mainstem Laguna de Santa Rosa. The Strategy was implemented via improvements to municipal wastewater treatment facilities and dairy management practices in the greater Laguna de Santa Rosa watershed. These improvements are the likely cause of observed reductions in nutrient and ammonia concentrations in the mainstem Laguna de Santa Rosa between the late 1990s and early 2000s.

Regional Water Board staff is currently developing new TMDLs for nitrogen, phosphorus, dissolved oxygen, temperature, and sediment in the greater Laguna de Santa Rosa watershed to address continuing water quality impairments. These TMDLs will apply to all water bodies in the Laguna de Santa Rosa, Santa Rosa Creek, and Mark West Creek HSAs, as mapped in the Basin Plan. These TMDLs are estimated to be completed in a few years.

Regional Water Board staff is also currently developing a pathogen TMDL to address indicator bacteria impairments in the Russian River, the Laguna de Santa Rosa, and the Santa Rosa Creek watersheds. The pathogen TMDL is estimated to be completed in 2016. Development of a mercury TMDL for the Laguna de Santa Rosa is not yet scheduled.

D. Other Plans, Policies and Regulations

1. On May 2, 2006, the State Water Board adopted State Water Board Order No. 2006-0003-DWQ, Statewide General WDRs for Sanitary Sewer Systems and on February 20, 2008 adopted Order No. WQ 2008-0002-EXEC Adopting Amended Monitoring and Reporting Requirements for Statewide General Waste Discharge Requirements for Sanitary Sewer Systems. Order No. 2006-0003-DWQ requires that all public agencies that currently own or operate sanitary sewer systems apply for coverage under the General WDRs. The deadline for permittees to apply for coverage was November 2, 2006. The Permittee applied for coverage and is subject to the requirements of Order Nos. 2006-0003-DWQ and WQ 2008-0002-EXEC and any future revisions thereto for operation of its wastewater collection system.

2. Storm water that falls within the confines of the Laguna Treatment Plant is not returned to the headworks. Therefore, coverage under State Water Board Water Quality Order No. 97-03-DWQ, NPDES General Permit No. CAS000001, Waste Discharge Requirements for Discharges of Storm Water Associated with Industrial Activities Excluding Construction Activities (Industrial Storm Water General Permit) is required for the Laguna Treatment Plant.

3. On July 22, 2004, the State Water Board adopted State Water Board Order No. 2004-0012-DWQ, General Waste Discharge Requirements for the Discharge of Biosolids to Land for Use as a Soil Amendment in Agricultural, Silvicultural, Horticultural, and Land Reclamation Activities. This Order requires the Permittee to continue to maintain coverage under the General Order for land application of Class B biosolids on City property and at the Lakeville Highway site located within the jurisdiction of the San Francisco Bay Regional Water Quality Control Board.

4. On February 3, 2009, the State Water Board adopted the Recycled Water Policy (State Water Board Resolution No. 2009-0011) for the purpose of increasing the use of recycled water from municipal wastewater sources in a manner that implements state and federal water quality laws. The Recycled Water Policy became effective on May 14, 2009. The Recycled Water Policy provides direction to the regional water boards regarding the appropriate criteria to be used in issuing permits for recycled water projects and describes permitting criteria intended to streamline, and provide consistency for, the permitting of the vast majority of recycled water projects. Pertinent provisions and requirements of the Policy have been incorporated into this Order to address conditions specific to the Permittee's plan to implement water recycling.

   The Recycled Water Policy recognizes the fact that some groundwater basins in the state contain salts and nutrients that exceed or threaten to exceed water quality objectives in the applicable Basin Plans, and that not all Basin Plans include adequate implementation procedures for achieving or ensuring compliance with the water quality objectives for salt or nutrients. The Recycled Water Policy further recognizes that these conditions can be caused by natural soils/conditions, discharges of waste, irrigation using surface water, groundwater or recycled water, and water supply augmentation using surface or recycled water, and that regulation of recycled water alone will not address these conditions. It is the intent of the Recycled Water Policy that salts and nutrients from all sources be managed on a basin-wide or watershed-wide basis in a manner that ensures attainment of water quality objectives and protection of beneficial uses. The Recycled Water Policy finds that the appropriate way to address salt and nutrient issues is through the development of regional or subregional SNMPs rather than through imposing requirements solely on individual recycled water projects.

This Order is consistent with the requirements of the Recycled Water Policy to implement a SNMP. Beginning in 2010, the Permittee has organized and has helped fund a SNMP development process. This Order may be reopened to incorporate provisions consistent with any salt and nutrient management plan(s) adopted by the Regional Water Board. This Order allows for increased use of recycled water consistent with the mandate established in the Recycled Water Policy to increase the use of recycled water in California. The Recycled Water Policy currently requires monitoring for priority pollutants once per year. This Order satisfies this requirement through (at least) quarterly monitoring for CTR priority pollutants that is required of the Permittee pursuant to the SIP.

5. Prior to making any change in the point of discharge, place of use, or purpose of use of treated wastewater that results in a decrease of flow in any portion of a watercourse, the Permittee must file a petition with the State Water Board, Division of Water Rights, and receive approval for such a change. The State Water Board retains the jurisdictional authority to enforce such requirements under Water Code section 1211.

IV. RATIONALE FOR EFFLUENT LIMITATIONS AND DISCHARGE SPECIFICATIONS

The CWA requires point source dischargers to control the amount of conventional, non-conventional, and toxic pollutants that are discharged into the waters of the United States. The control of pollutants discharged is established through effluent limitations and other requirements in NPDES permits. There are two principal bases for effluent limitations in the Code of Federal Regulations: section 122.44(a) requires that permits include applicable technology-based limitations and standards; and section 122.44(d) requires that permits include WQBELs to attain and maintain applicable numeric and narrative water quality criteria to protect the beneficial uses of the receiving water where a reasonable potential to exceed those criteria exists.

A. Discharge Prohibitions

1. **Discharge Prohibition III.A.** The discharge of any waste not disclosed by the Permittee or not within the reasonable contemplation of the Regional Water Board is prohibited.

   This prohibition is based on the Basin Plan, the previous Order, and State Water Board Order No. WQO 2002-0012 regarding the petition of WDRs Order No. 01-072 for the East Bay Municipal Utility District and Bay Area Clean Water Agencies. In State Water Board Order No. WQO 2002-0012, the State Water Board found that this prohibition is acceptable in orders, but should be interpreted to apply only to constituents that are either not disclosed by the Permittee, or are not reasonably anticipated to be present in the discharge but have not been disclosed by the

Permittee. It specifically does not apply to constituents in the discharge that do not have "reasonable potential" to exceed water quality objectives.

The State Water Board has stated that the only pollutants not covered by this prohibition are those which were "*disclosed to the permitting authority and … can be reasonably contemplated*." [In re the Petition of East Bay Municipal Utilities District et al., (State Water Board, 2002) Order No. WQO 2002-0012, p. 24] In that Order, the State Water Board cited a case which held the Permittee is liable for the discharge of pollutants "*not within the reasonable contemplation of the permitting authority ….whether spills or otherwise…*" [*Piney Run Preservation Assn. v. County Commissioners of Carroll County, Maryland* (4th Cir. 2001) 268 F. 3d 255, 268.] Thus the State Water Board authority provides that, to be permissible, the constituent discharged (1) must have been disclosed by the Permittee and (2) can be reasonably contemplated by the Regional Water Board.

Whether or not the Permittee reasonably contemplates the discharge of a constituent is not relevant. What matters is whether the Permittee disclosed the constituent to the Regional Water Board or whether the presence of the pollutant in the discharge can otherwise be reasonably contemplated by the Regional Water Board at the time of Order adoption.

2. **Discharge Prohibition III.B.** Creation of pollution, contamination, or nuisance, as defined by Section 13050 of the California Water Code is prohibited.

   This prohibition is based on section 13050 of the Water Code, and has been retained from the previous Order.

3. **Discharge Prohibition III.C.** The discharge of sludge or digester supernatant is prohibited, except as authorized under section VI.C.5.c. (Sludge Disposal and Handling Requirements, section VI.C.5.c of this Order.)

   This prohibition is based on restrictions on the disposal of sewage sludge found in federal regulations [40 CFR Part 503 (Biosolids), Part 527 and Part 258] and Title 27 of the California Code of Regulations (CCR). It has been retained from the previous Order.

4. **Discharge Prohibition III.D.** The discharge or reclamation use of untreated or partially treated waste from anywhere within the collection, treatment, or disposal systems is prohibited, except as provided for in section IV.C.2 (Reclamation Specifications), and in Attachment D, Standard Provisions G (Bypass) and H (Upset).

   This prohibition has been retained from the previous Order and is based on the Basin Plan to protect beneficial uses of the receiving water from unpermitted discharges,

and the intent of the Water Code sections 13260 through 13264 relating to the discharge of waste to waters of the State without filing for and being issued an Order. This prohibition applies to spills not related to sanitary sewer overflows (SSOs) and other unauthorized discharges of wastewater within the collection, treatment, and disposal facilities. The discharge of untreated or partially treated wastewater from the collection, treatment, or disposal facility represents an unauthorized bypass pursuant to 40 CFR 122.41(m) or an unauthorized discharge which poses a threat to human health and/or aquatic life, and therefore is explicitly prohibited by this Order.

5. **Discharge Prohibition III.E.** Any SSO that results in a discharge of untreated or partially treated wastewater to (a) waters of the State or (b) land that creates pollution, contamination, or nuisance, as defined in Water Code section 13050(m) is prohibited.

   This prohibition applies to spills related to SSOs and is based on State standards, including section 13050 of the Water Code and the Basin Plan. This prohibition is consistent with the State's antidegradation policy as specified in State Water Board Resolution No. 68-16 (Statement of Policy with Respect to Maintaining High Quality of Water in California) in that the prohibition imposes conditions to prevent impacts to water quality, the degradation of water quality, negative effects on receiving water beneficial uses, and lessening of water quality beyond that prescribed in State Water Board or Regional Water Board plans and policies.

   This prohibition is stricter than the prohibitions stated in State Water Board Order 2006-003-DWQ, Statewide General Waste Discharge Requirements for Sanitary Sewer Systems. Order No. 2006-0003-DWQ prohibits SSOs that result in the discharge of untreated or partially treated wastewater to waters of the United States and SSOs that cause a nuisance, compared to Prohibition III.E of this Order, which prohibits SSO discharges that create nuisance or pollution to waters of the State, groundwater, and land for a more complete protection of human health. The rationale for this prohibition is because of the prevalence of high groundwater in the North Coast Region, and this Region's reliance on groundwater as a drinking water source.

6. **Discharge Prohibition III.F.** The discharge of waste to land that is not owned by the Permittee, governed by City ordinance, or under agreement to use by the Permittee, or for which the Permittee has explicitly permitted such use, is prohibited, except for use for fire suppression as provided in title 22, sections 60307 (a) and (b) of the California Code of Regulations (CCR).

   This prohibition is retained from WDRs Order No. R1-2006-0045. Land used for the application of wastewater must be owned by the Permittee, governed by City ordinance, or be under the control of the Permittee by contract so that the Permittee maintains a means for ultimate disposal of treated wastewater.

7. **Discharge Prohibition III.G.** The discharge of waste at any point not described in Finding II.B of the Fact Sheet or authorized by a permit issued by the State Water Board or another Regional Water Board is prohibited, except for use for fire suppression.

   This prohibition is a general prohibition that allows the Permittee to discharge waste only in accordance with WDRs. It is based on sections 301 and 402 of the federal CWA and section 13263 of the Water Code.

8. **Discharge Prohibition III.H.** The average daily dry weather flow (ADWF) of waste into the Subgegional System in excess of 21.34 MGD is prohibited until such time as additional treatment, storage, and/or total reclamation capacity has been added to accommodate a higher ADWF, not to exceed 25.9 MGD. Compliance with this prohibition shall be determined as defined in section VII.M and in accordance with section VI.C.3 of this Order.

   The prohibition limiting the ADWF to 21.34 MGD is retained from the previous permit. In the Report of Waste Discharge, the Permittee has requested that the treatment and disposal capacity be increased in the permit from 21.34 to 25.9 MGD as a result of the Subregional System's ability to manage increased recycled water flows through treatment plant expansion, disposal and reuse projects, such as the Laguna Treatment Plant Upgrade Project, Geysers Expansion Project, the Santa Rosa Urban Reuse Project, and the Discharge Compliance Project.

9. **Discharge Prohibition III.I.** The discharge of wastewater effluent from the Subregional System to the Russian River or its tributaries is prohibited during the period of May 15 through September 30 of each year.

   This prohibition is retained from the previous Order, and is required by the Basin Plan. The Basin Plan prohibits discharges to the Russian River and its tributaries during the period of May 15 through September 30 (Chapter 4, North Coastal Basin Discharge Prohibition No. 3). The original intent of this prohibition was to prevent the contribution of wastewater to the baseline flow of the Russian River during the period of the year when the Russian River and its tributaries experience the heaviest water-contact recreation use.

10. **Discharge Prohibition III.J.** During the period from October 1 through May 14, discharges of treated wastewater shall not exceed 5 percent of the flow of the Russian River.

    The Basin Plan (Chapter 4, North Coastal Basin Discharge Prohibition No. 4) prohibits discharges to the Russian River and its tributaries when the waste discharge flow is greater than one percent of the receiving water's flow, except where an exception has

been defined in a NPDES permit. In the Permittee's previous permit, Water Quality Order No. 2000-03, adopted by the State Water Board on March 15, 2000, the State Water Board determined that the Subregional System qualified for the exception and authorized the discharge of up to five percent of the flow in the Russian River upon implementation of the Geysers Recharge Project. The following permit, WDR Order No. R1-2006-0045 retained that authorization.

Prohibition III.J of this Order specifies that the discharge may comply with the 5 percent requirement as a monthly average for the surface water discharge season, provided the Permittee adjusts the discharge of treated wastewater to five percent of the most recent daily flow measurement of the Russian River, as measured at Hacienda Bridge (USGS Gage No. 11467000) to the extent practicable. This modification provides day-to-day operational flexibility for the Permittee while retaining the intent of the prohibition.

11. **Discharge Prohibition III.**K. The discharge of any radiological or biological warfare agent into waters of the state is prohibited under Water Code section 13375.

    This prohibition is based on section 13375 of the Water Code.

B. Technology-Based Effluent Limitations

1. Scope and Authority

Section 301(b) of the CWA and implementing USEPA permit regulations at 122.44 require that permits include conditions meeting applicable technology-based requirements at a minimum, and any more stringent effluent limitations necessary to meet applicable water quality standards. The discharge authorized by this Order must meet minimum federal technology-based requirements based on Secondary Treatment Standards at Part 133 and Best Professional Judgment (BPJ) in accordance with Part 125, section 125.3

Regulations promulgated in section 125.3(a)(1) require technology-based effluent limitations for municipal dischargers to be placed in NPDES permits based on Secondary Treatment Standards or Equivalent to Secondary Treatment Standards.

The Federal Water Pollution Control Act Amendments of 1972 (PL 92-500) established the minimum performance requirements for POTWs [defined in section 304(d)(1)]. Section 301(b)(1)(B) of that Act requires that such treatment works must, as a minimum, meet effluent limitations based on secondary treatment as defined by the USEPA Administrator.

Based on this statutory requirement, USEPA developed secondary treatment regulations, which are specified in Part 133. These technology-based regulations apply to all municipal wastewater treatment plants and identify the minimum level of effluent quality attainable by secondary treatment in terms of BOD_5, TSS, and pH, as follows:

a. BOD_5 and TSS

i. The 30-day average shall not exceed 30 mg/L.

ii. The 7-day average shall not exceed 45 mg/L.

iii. The 30-day average percent removal shall not be less than 85%.

b. pH

The pH shall be maintained within the limits of 6.0 to 9.0.

The effluent limitation for pH required to meet the water quality objective for hydrogen ion concentration (pH) is contained in the Basin Plan, Table 3-1.

In addition, section 122.45(f) requires the establishment of mass-based effluent limitations for all pollutants limited in Orders, except for 1) pH, temperature, radiation, or other pollutants which cannot be appropriately expressed by mass, and 2) when applicable standards and limitations are expressed in terms of other units of measure.

2. Applicable Technology-Based Effluent Limitations

The effluent limitations in this Order for BOD_5, TSS, and pH exceed the technology-based requirements for secondary treatment set forth in section 133.102. Effluent limitations for pH have been established that also meet the water quality-based requirements set forth in the Basin Plan.

In addition to the minimum, federal technology-based requirements, the Basin Plan requires that discharges of municipal waste "*shall be of advanced treated wastewater in accordance with effluent limitations contained in NPDES permits for each affected discharger, and shall meet a median coliform level of 2.2 MPN/100 mL*" for discharges to the Russian River and its tributaries during October 1 through May 14. This requirement leaves discretion to the Regional Water Board to define advanced wastewater treatment by the implementation of effluent limitations in individual permits.

a. BOD_5 and TSS. For the purpose of applying advanced wastewater treatment requirements on the discharge, effluent limitations for BOD_5 and TSS are

established at 10 mg/L as a monthly average and 15 mg/L as a weekly average, which are technically achievable based on the capability of a tertiary treatment system. In addition, 133.102, in describing the minimum level of effluent quality attainable by secondary treatment, states that the 30-day average percent removal shall not be less than 85 percent. These effluent limitations are retained from WDR Order No. R1-2006-0045.

b. pH. The secondary treatment regulations at Part 133 require that pH be maintained between 6.0 and 9.0 standard units. A more stringent water quality-based effluent limitation range of 6.5 – 8.5 for pH is required to meet the water quality objective for hydrogen ion concentration (pH) contained in the Basin Plan.

c. Turbidity. The proposed turbidity requirements are based on the definition of filtered wastewater found in title 22 section 60301.320 of the CCR. The title 22 definition is used as a reasonable performance standard to ensure adequate removal of turbidity upstream of disinfection facilities. Properly designed and operated effluent filters will meet this standard regardless of whether the final use is water recycling or discharge to surface water. The point of compliance for the turbidity requirements is a point following the effluent filters and before discharge to the disinfection system. The proposed limitation specifies that the turbidity of the filtered wastewater not exceed an average of 2 NTU within a 24-hour period, 5 NTU more than 5 percent of the time within a 24-hour period, and 10 NTU at any time. This performance standard is consistent with the title 22 definition of filtered wastewater.

d. Mass-Based Effluent Limitations. Federal regulations at 122.45(f) require that, except under certain conditions, all permit limits, standards, or prohibitions be expressed in terms of mass units. Among the conditions exempting the application of mass-based limitations is section 122.45(f)(2), "when applicable standards and limitations are expressed in terms of other units of measure." Because secondary treatment standards for BOD_5 and TSS are expressed in terms of concentration and percent removal, mass-based effluent limitations for these parameters are not required.

Mass-based effluent limitations for BOD_5 and TSS were included in the previous Order, but have been removed from this Order, in accordance with federal regulations at 122.44(l). The action to remove these limitations is discussed in detail in section IV.D.1 of the Fact Sheet.

e. Total Coliform Bacteria. Even though effluent limits for coliform bacteria are not set out in the federal regulations for secondary treatment, they are included here in the section on technology-based effluent limits because they reflect technology

standards for tertiary treatment. Coliform bacteria are a pollutant of concern in all wastewaters of domestic origin, and therefore, this Order retains the effluent limitations for total coliform bacteria from WDR Order No. R1-2006-0045. These effluent limitations reflect standards for tertiary treated recycled water in the Basin Plan (Section 4, Implementation Plans) and as adopted by the California Department of Public Health (CDPH) in title 22 of the CCR. Recycled water from the Subregional System meets the most protective title 22 treatment and disinfection standards and is suitable for the broad range of recycled water uses identified in title 22, including urban land uses.

C. Water Quality-Based Effluent Limitations (WQBELs)

1. Scope and Authority

Section 301(b) of the CWA and federal regulations at 122.44(d) require that permits include limitations more stringent than applicable federal technology-based requirements where necessary to achieve applicable water quality standards. This Order contains requirements, expressed as technology equivalence requirements that are necessary to meet applicable water quality standards. The rationale for these requirements, which consist of advanced wastewater treatment, is discussed in section IV.B.2 of this Fact Sheet. In addition, this Order contains additional requirements to meet applicable water quality standards. The rationale for these requirements is discussed in section IV.C.3 of this Fact Sheet.

Part 122.44(d)(1)(i) mandates that permits include effluent limitations for all pollutants that are or may be discharged at levels that have the reasonable potential to cause or contribute to an exceedance of a water quality standard, including numeric and narrative objectives within a standard. A reasonable potential analysis (RPA) was conducted for discharges at all authorized points of discharge to surface waters from the Subregional System.

As discussed in detail in the following sections, Regional Water Board staff has determined that there is reasonable potential for those discharges to exceed the narrative water quality objectives for biostimulatory substances.

For priority pollutants and other narrative and numeric water quality objectives in the Basin Plan, the RPA demonstrated reasonable potential for discharges from the Subregional System to cause or contribute to exceedances of WQOs for chlorodibromomethane and dichlorobromomethane at Discharge Points 015, 006A, 006B, and 012A(1).

The RPA for Discharge Points 015, 006A, 006B, and 012A(1) was performed using the effluent monitoring data from M-001 (now EFF-001) because 1) effluent at M-001 is a

measurement of effluent quality for direct discharges to surface water (i.e., no diversion to storage ponds) and 2) no data was available for Discharge Points 006A or 006B because the Permittee did not discharge from these locations during the last permit term.

Where reasonable potential has been established for a pollutant, but there is no numeric criterion or objective for the pollutant, WQBELs must be established using: (1) USEPA criteria guidance under CWA section 304(a), supplemented where necessary by other relevant information; (2) an indicator parameter for the pollutant of concern; or (3) a calculated numeric water quality criterion, such as a proposed state criterion or policy interpreting the state's narrative criterion, supplemented with other relevant information, as provided in 122.44(d)(1)(vi).

The process for determining reasonable potential and calculating WQBELs when necessary is intended to protect the designated uses of the receiving water as specified in the Basin Plan, and achieve applicable water quality objectives and criteria that are contained in other state plans and policies, or any applicable water quality criteria contained in the CTR and NTR.

2. Applicable Beneficial Uses and Water Quality Criteria and Objectives

a. Beneficial Uses. Beneficial use designations for receiving waters for discharges from the Subregional System are presented in section III.B.1 of this Fact Sheet.

b. Basin Plan Water Quality Objectives. In addition to the specific water quality objectives indicated above, the Basin Plan contains narrative objectives for color, tastes and odors, floating material, suspended material, settleable material, oil and grease, biostimulatory substances, sediment, turbidity, pH, dissolved oxygen, bacteria, temperature, toxicity, pesticides, chemical constituents, and radioactivity that apply to inland surface waters, enclosed bays, and estuaries, and includes the Russian River and its tributaries. For waters designated for use as domestic or municipal supply (MUN), the Basin Plan establishes as applicable water quality criteria the Maximum Contaminant Levels (MCLs) established by CDPH for the protection of public water supplies at title 22 of the California Code of Regulations section 64431 (Inorganic Chemicals) and section 64444 (Organic Chemicals).

c. SIP, CTR and NTR. Water quality criteria and objectives applicable to this receiving water are established by the CTR, established by the USEPA at section 131.38; and the NTR, established by the USEPA at section 131.36. Criteria for most of the 126 priority pollutants are contained within the CTR and the NTR.

Aquatic life freshwater and saltwater criteria are identified as criterion maximum concentrations (CMC) and criterion continuous concentrations (CCC). The CTR

defines the CMC as the highest concentration of a pollutant to which aquatic life can be exposed for a short period of time without deleterious effects and the CCC as the highest concentration of a pollutant to which aquatic life can be exposed for an extended period of time (4 days) without deleterious effects. The CMC is used to calculate an acute or 1-hour average numeric effluent limitation and the CCC is used to calculate a chronic or 4-day average numeric effluent limitation. Aquatic life freshwater criteria were used for the RPA.

Human health criteria are further identified as "water and organisms" and "organisms only." "Water and organism" criteria are designed to address risks to human health from multiple exposure pathways. The criteria from the "water and organisms" column of CTR were used for the RPA because the Basin Plan identifies the existing and potential municipal water supply beneficial use for Santa Rosa Creek and the Laguna de Santa Rosa.

The SIP, which is described in section III.B.3 of this Fact Sheet, includes procedures for determining the need for, and the calculation of, WQBELs and requires permittees to submit data sufficient to do so.

At title 22, division 4, chapter 15 of the CCR, CDPH has established MCLs for certain pollutants for the protection of drinking water. Chapter 3 of the Basin Plan establishes these MCLs as water quality objectives applicable to receiving waters with the beneficial use designation of municipal and domestic supply.

Summaries of RPA results for all priority pollutants are presented for Discharge Points 006A, 006B, 012A(1)and 015 in Table F-12 and in Table F-13 for Discharge Points 012A(2) and 012B .

3. Determining the Need for WQBELs

NPDES regulations at 122.44 (d) require effluent limitations to control all pollutants which are or may be discharged at a level which will cause, have the reasonable potential to cause, or contribute to an excursion above any State water quality standard.

a. Non-Priority Pollutants

i. **pH.** The effluent limitation for pH of 6.5 to 8.5 is based on the water quality objective for all surface waters of the North Coast Region established in Chapter 3 of the Basin Plan. Federal technology-based requirements prescribed in Part 133 are not sufficient to meet these Basin Plan water quality standards.

ii. Biostimulatory Substances

The following analysis is based in part on data and information presented in a June 14, 2013 memorandum from Rebecca Fitzgerald, supervisor of the Regional Water Board's TMDL Unit, to Charles Reed et al., and on works referenced therein. In response to public comments received concerning the draft Order, this memorandum was revised and reissued on October 22, 2013. The latter version of this memorandum supersedes the former.

(1) Nitrogen and phosphorus are biostimulatory substances.

Nitrogen compounds (ammonia, nitrate, nitrite, and forms of organic nitrogen) and phosphorus compounds (particulate and dissolved forms of phosphorus) in surface waters can stimulate the growth rates of photosynthetic bacteria, algae and other aquatic plants. The overabundance of nitrogen and phosphorus compounds in surface water bodies can result in the excessive growth and decay of these organisms, thus accelerating the process of eutrophication, especially in lake-like waters. These phenomena cause dissolved oxygen levels to drop below concentrations needed for the survival and health of fish and aquatic life, which in turn negatively affects the aesthetic quality of water bodies, and impairs other beneficial uses.

Because the Permittee's discharge is a source of nitrogen and phosphorus compounds, Regional Water Board staff has evaluated the reasonable potential for the discharge to cause, contribute to, or promote biostimulatory conditions in the mainstem Laguna de Santa Rosa and lower Mark West Creek. Based on that evaluation, appropriate limitations and requirements have been established in this Order to ensure compliance with the Basin Plan's narrative water quality objective for biostimulatory substances that states "*[w]aters shall not contain biostimulatory substances in concentrations that promote aquatic growths to the extent that such growths cause nuisance or adversely affect beneficial uses*."

In order to interpret this narrative objective, Regional Water Board staff evaluated several chemical and biological indicators against numeric threshold values, including, but not limited to numeric criteria for phosphorus, nitrogen, and chlorophyll *a* concentrations. USEPA recommended criteria for total phosphorus (dissolved plus particulate), total nitrogen, and chlorophyll α for rivers and streams and for lakes and reservoirs are based on aggregate ecoregions. Table F-4 contains the applicable criteria for Aggregate Nutrient Ecoregion III, which includes the greater Laguna de Santa Rosa watershed.

Table F-4. USEPA Recommended Biostimulatory Substance Criteria

Constituent	(Lentic) Criteria for Lakes & Reservoirs[1]	(Lotic) Criteria for Rivers & Streams[2]
Total Phosphorus	0.017mg/L	0.02188 mg/L
Total Nitrogen	0.40 mg/L	0.38 mg/L
Chlorophyll *a*	0.0034 mg/L	0.00178 mg/L

Sources:

1. United States Environmental Protection Agency (USEPA). 2001. Ambient Water Quality Criteria Recommendations: Information Supporting the Development of State and Tribal Nutrient Criteria: Lakes and Reservoirs in Nutrient Ecoregion III. Publication No. EPA 822-B-01-008. United States Environmental Protection Agency, Washington DC.
2. United States Environmental Protection Agency (USEPA). 2000. Ambient Water Quality Criteria Recommendations: Information Supporting the Development of State and Tribal Nutrient Criteria: Rivers and Streams in Nutrient Ecoregion III. Publication No. EPA 822-B-00-016. United States Environmental Protection Agency, Washington DC.

For use in California, the State Water Board developed nutrient screening tools for assessing biostimulatory conditions in water bodies evaluated pursuant to the CWA Section 303(d) listing process. Table F-5 contains the recommended screening criteria for California water bodies.

Table F-5. California Recommended Biostimulatory Substance Criteria

Constituent	(Lentic) Criteria for Lakes & Reservoirs	(Lotic) Criteria for Rivers & Streams with COLD, REC, MUN, & SPWN Beneficial Uses
Total Phosphorus	0.100 mg/L	0.02 mg/L
Total Nitrogen	1.200 mg/L	0.23 mg/L
Chlorophyll *a*	0.010 mg/L	150 mg/m^2

Source:

State Water Resources Control Board (SWRCB). 2007. Staff Report; Division of Water Quality; Nutrient Screening Tools for Use in the Clean Water Act Section 303(d) Listing Process. December 26, 2007. State Water Resources Control Board Division of Water Quality, Sacramento, CA.

(2) Receiving water concentrations of nitrogen and phosphorus exceed recommended criteria for biostimulatory substances.

Instream water samples for nutrients and other indicators of biostimulatory conditions have been collected in the water bodies of the greater Laguna de

Santa Rosa watershed for decades. Available data and other information suggest that harmful biostimulatory conditions are present in the mainstem Laguna de Santa Rosa and lower Mark West Creek, as demonstrated by elevated amounts of nutrients in the water column and aquatic sediments, elevated levels of chlorophyll *a*, frequently low dissolved oxygen levels, and the extensive presence of benthic macrophytes (including *Ludwigia* sp.) These water bodies, as well as many of their tributaries, are also facing significant water quality problems due to high levels of instream sedimentation, hydrologic and physical habitat changes, and high water temperatures.

While available data indicate apparent reductions in total nitrogen concentrations since the 1980s, concentrations measured most recently continue to exceed recommended criteria. In fact, total nitrogen concentrations in 100% of 42 samples collected and analyzed in the mainstem Laguna de Santa Rosa and lower Mark West Creek during the period 2001-2010 exceed the USEPA recommended criterion of 0.40 mg-N/L, and concentrations in 79% of the samples exceed the California recommended criterion of 1.200 mg-N/L for lentic water bodies.

Similarly, while available data indicate significant and substantial reductions in total phosphorus concentrations since the 1970s, concentrations measured most recently continue to far exceed recommended criteria. In fact, 100% of 43 samples collected and analyzed in the mainstem Laguna de Santa Rosa and lower Mark West Creek during the period 2001-2010 exceed both the USEPA recommended criterion of 0.017 mg-P/L and the California recommended criterion of 0.1 mg -P/L for lentic water bodies.

(3) The Permittee's effluent discharge is a significant and controllable source of nitrogen and phosphorus.

Treated wastewater from the Permittee's primary point of discharge, Delta Pond, which occurs at the confluence of Santa Rosa Creek and the mainstem Laguna de Santa Rosa, remains a significant, controllable point source discharge to the Laguna de Santa Rosa. The Permittee's ROWD indicates that the average concentration of total nitrogen in the treated effluent discharge from 2007 to 2011 was approximately 9.2 mg-N/L (calculated by adding the average nitrate concentration to the average total Kjeldahl nitrogen over roughly the same time period and neglecting the concentration of nitrite, which is assumed to be low). The mass emission of total nitrogen from all discharges from October 1, 2006, through February 2011 was 48,046 pounds. For phosphorus, the average concentration, expressed as total phosphate, from

2006 to 2008 was 2.2 mg-P/L and the mass emission of total phosphorus was 13,331 pounds from October 2006 through February 2010.

Although the volume discharged by the Permittee has decreased significantly since 2007 through an expansion of the Geysers Recharge Project, in combination with the Permittee's agricultural and urban water recycling program, the discharge remains a potentially significant point source, for example, discharging 744 million gallons to the Laguna de Santa Rosa from January 2010 to April 2010. In addition, this Order retains a provision that authorizes the Permittee to discharge up to 5 percent of the flow in the Russian River in any month from October 1 through May 14, leaving open the possibility of much larger wastewater discharges than have occurred in recent years. The effluent limitation established in this Order for total phosphorus encourages the Permittee to minimize wastewater discharges that could contribute to harmful biostimulatory conditions in the impaired waters of the greater Laguna de Santa Rosa watershed. When wastewater discharges cannot be avoided, the effluent limitation requires that those discharges be offset.

While some of the Permittee's effluent discharge from Delta Pond is presumed to enter the Russian River downstream of the discharge location and exit the watershed to the Pacific Ocean at Jenner, there is evidence that during high flows in the Russian River, the mainstem Laguna de Santa Rosa backs up, creating conditions that favor the capture of dissolved and particulate nutrient discharges.

Available studies describe the unique hydrology of the mainstem Laguna de Santa Rosa, particularly at its confluence with Mark West Creek, downstream of Delta Pond, and describe conditions under which a flow restriction is created during flood events in the Russian River. Because it is during heavy rainfall events that the Permittee is most likely to discharge, Regional Water Board staff concludes that pollutants in the Permittee's discharge are likely to be captured and stored in the channels of the mainstem Laguna de Santa Rosa and lower Mark West Creek.

(4) Phosphorus concentrations limit biomass production and drive biostimulatory conditions. Phosphorus loads must therefore be controlled.

In addition to analyzing nutrient data measured in the Laguna de Santa Rosa over the last three decades, Regional Water Board staff has recently reviewed scientific literature regarding the relationship between nutrients and biomass

production. Based on these reviews, staff concludes that phosphorus is the limiting nutrient in the receiving water system.

Preliminary TMDL linkage analysis and modeling results support the conclusion that total phosphorus concentrations limit algal biomass production in the Laguna de Santa Rosa. Results of water quality modeling indicate that sediments in the mainstem Laguna de Santa Rosa and lower Mark West Creek are highly enriched with organic material, which results in a relatively high sediment oxygen demand (SOD). SOD is caused by the oxidation of organic matter in benthic sediments. Sources of organic matter in sediments include leaf litter, soil entering the water body through erosion and deposition, particulate matter from wastewater discharges, and deposition of algal and macrophytic biomass. Regardless of the source, the oxidation of deposited benthic organic matter will exert a SOD on the water column, and drive concentrations of dissolved oxygen to harmfully low levels.

Regional Water Board staff has established linkages between the total phosphorus concentration, algal biomass, carbonaceous biochemical oxygen demand (CBOD), and SOD. According to the assessment, algal biomass contributes to CBOD in the water column, and upon senescence and settling, contributes to the SOD. In the Laguna de Santa Rosa system, total phosphorus concentrations limit both phytoplankton and benthic algal biomass. Reductions in total phosphorus concentrations are therefore expected to reduce algal biomass, CBOD and SOD, which is the primary driver of low dissolved oxygen. Although the Laguna de Santa Rosa TMDL for phosphorus is not yet fully developed, the evidence is clear that biostimulatory conditions exist and that instream phosphorus concentrations drive those conditions. Currently, the mainstem Laguna and lower Mark West Creek have no apparent capacity to assimilate additional phosphorus loads without continuing to exceed the Basin Plan's water quality objectives for biostimulatory substances and dissolved oxygen. Regional Water Board staff therefore concludes that reductions in internal and external phosphorus loads to these water bodies are needed to protect their beneficial uses, and to ultimately improve water quality conditions. The total phosphorus load from the Permittee's discharge is significant because any additional load of total phosphorus exacerbates the level of degradation and impedes recovery of the impaired beneficial uses of the Laguna de Santa Rosa and lower Mark West Creek. However, because phosphorus is the limiting nutrient in these water bodies and excessive phosphorus is the primary driver of biostimulatory conditions, reductions in nitrogen loads beyond current levels are not expected to result in added protection of the beneficial uses, or significant water quality improvements in the water column.

(5) This Order establishes effluent limitations for total phosphorus and total nitrogen to meet water quality standards.

Total Phosphorus

Based on its analysis of effluent and water quality data as well as information on the physical condition of the receiving water body, Regional Water Board staff has determined that permitted discharges of total phosphorus from the Subregional System occur at levels that promote excessive aquatic growth occurring within the mainstem Laguna de Santa Rosa and lower Mark West Creek and contribute to excursions of the Basin Plan's water quality objectives for biostimulatory substances and dissolved oxygen. Therefore, in accordance with federal regulations at 122.44(d), this Order establishes a water quality-based effluent limitation for total phosphorus.

Instead of establishing a numeric water quality-based effluent limitation for total phosphorus, this Order includes a narrative (BMP-based) effluent limitation, expressed as "no net loading." This final effluent limitation was established in the previous Order and became effective on November 9, 2011. A "no net loading" effluent limitation represents a conservative effluent limitation to control phosphorus loading to water bodies of the Laguna de Santa Rosa and to prevent further water quality degradation.

The "no net loading" limitation in this Order for phosphorus is appropriate because calculating a numeric effluent limitation is infeasible at this time, due to the lack of sufficient information upon which to base such a limitation. At this time, there is no clear guidance from USEPA or the State Water Board about how to translate narrative water quality criteria for nutrients into numeric water quality standards. Recommended numeric criteria for biostimulatory substances exist (See Tables F-4 and F-5), but the values of those criteria have limited meaning if not considered within a larger context that accounts for the complex physical, biological, and chemical interactions occurring within an aquatic system. Such a comprehensive understanding is not yet available for the Laguna de Santa Rosa and lower Mark West Creek. Furthermore, recommended criteria for total phosphorus differ by an order of magnitude, which suggests that there is no agreement about which water quality criterion would be fully protective of beneficial uses.

The use of a BMP-based permitting approach is consistent with federal regulations at 122.44(k) where the permitting authority may include BMPs as permit conditions when numeric effluent limitations are infeasible to calculate and where BMPs are necessary to meet state water quality standards. This approach meets the goal of the CWA because the intent of the permit condition

is to control phosphorus loading to impaired receiving waters and prevent further water quality degradation through the implementation of an approved nutrient offset program (in conjunction with other pollutant reduction strategies). A "no net loading" limitation also provides an indirect benefit because complying with the limitation through nutrient offsets means that discharges of nutrients from nonpoint source discharges not currently under permit by the Regional Water Board may be controlled.

Finally, Regional Water Board staff is also mindful of the costs associated with treatment plant upgrades that would likely be required to meet the existing recommended nutrient criteria that could conceivably be used as final numeric effluent limitations. In its program-level Discharge Compliance Project Environmental Impact Report (DCP EIR), the Permittee compared installation of Enhanced Nutrient Removal (ENR) facilities at its Laguna Treatment Plant to implementation of a nutrient offset program within the Laguna de Santa Rosa watershed and identified the nutrient offset approach as the "Environmentally Superior Option" concluding that a nutrient offset program would be capable of reducing impacts of nutrient loading from the Subregional System to zero. By comparison, construction of ENR facilities could cost as much as $60 million in capital costs and $4.5 million in annual operation and maintenance costs. In light of the possible financial ramifications of this limitation and the water quality benefits that are attainable through the successful implementation of a nutrient offset program, Regional Water Board staff has established this BMP-based limitation (i.e., "no net loading") for total phosphorus that is achievable through compliance with an approved nutrient offset program.

Total Nitrogen

As explained in the previous section, because phosphorus is the limiting nutrient controlling biostimulatory conditions in the Laguna de Santa Rosa and lower Mark West Creek, reductions in nitrogen loads beyond current levels are not expected to result in added protection of the beneficial uses, or significant water quality improvements. Consequently, Regional Water Board staff has determined that there is no reasonable potential for the Permittee to discharge nitrogen at a level that may cause or contribute to an excursion above the Basin Plan's water quality objective for biostimulatory substances.

However, high concentrations of total nitrogen in the water column can lead to high levels of ammonia toxicity through the conversion of nitrogen compounds to ammonia, which is toxic to fish and aquatic life in its unionized form. While the current level of total nitrogen in the Permittee's discharge is not believed to cause exceedances of the Basin Plan's narrative water quality objective for

toxicity, concentrations beyond current levels do have a reasonable potential to violate the Federal and State Antidegradation Policies. Therefore, to remain consistent with Federal and State Antidegradation Policies, the Proposed Permit includes a performance-based effluent limitation for total nitrogen that will ensure no degradation occurs.

iii. Ammonia

The Basin Plan establishes a narrative water quality objective for toxicity, stating that "[a]*ll waters shall be maintained free of toxic substances in concentrations that are toxic to, or that produce detrimental physiological responses in human, plant, animal, or aquatic life.*"

Discharges of toxic concentrations of ammonia would violate the Basin Plan narrative toxicity objective. For toxicity concerns related to ammonia, Regional Water Board staff relies on USEPA's recommended water quality criteria for ammonia in fresh water from the 1999 Update of Ambient Water Quality Criteria for Ammonia, EPA-822-R-99-014 (1999) to interpret the Basin Plan's narrative objective for toxicity. The USEPA recommends acute and chronic water quality criteria for the protection of aquatic life, which are expressed as mathematical formulas. The acute criterion varies depending on receiving water pH and on the presence/absence of salmonids. This criterion is expressed as the one-hour concentration of total ammonia nitrogen that shall not be exceeded more than once every three years. The chronic criterion varies depending on pH, water temperature, and the presence or absence of early life stages of fish. This criterion is expressed as the thirty-day average concentration of total ammonia nitrogen that shall not be exceeded more than once every three years.

Regional Water Board staff conducted an analysis to determine whether the Permittee's discharge had a reasonable potential to cause an exceedance of water quality criteria for ammonia. The water quality criterion used for the ammonia RPA is 0.4 mg/L and is based on a receiving water pH of 8.5 and temperature of 30°C. Effluent monitoring data for ammonia are not available for Discharge Points 006A, 006B, 012A(1), and 015, and the observed maximum effluent concentration at Discharge Point 012B was 0.3 mg/L, less than the applicable criteria. The maximum observed concentration of ammonia in the receiving water was 0.2 mg/L. Therefore, discharges from the Subregional System do not demonstrate reasonable potential, and no effluent limitations for ammonia-nitrogen are required. The MRP for this Order requires the Permittee to continue to collect effluent monitoring data to determine if the discharge from the Subregional System poses future

reasonable potential to cause or contribute to exceedances of applicable water quality objectives for ammonia.

iv. Nitrate

Nitrate is known to cause adverse health effects in humans. For waters designated as domestic or municipal supply, the Basin Plan (Chapter 3) adopts the MCLs, established by CDPH for the protection of public water supplies at title 22 of the California Code of Regulations, sections 64431 (Inorganic Chemicals) and 64444 (Organic Chemicals), as applicable water quality criteria. The MCL for nitrate (10 mg/L as N) is therefore applicable as a water quality criterion for Santa Rosa Creek and the Laguna de Santa Rosa. No nitrate effluent data were available for Discharge Points 006A, 006B, 012A(1), and 015, and the maximum discharge concentration of nitrate at Discharge Point 012B was 8.99 mg/L as N. The maximum observed concentration of nitrate in the receiving water was 0.66 mg/L as N.

Using the methodology in the SIP for determining reasonable potential, recent effluent data collected in Delta Pond demonstrate that there is no reasonable potential for discharges at Discharge Points 012A(1), 012A(2), and 012B to cause exceedances of water quality objectives for nitrate; therefore no effluent limitation for nitrate is required.

b. Priority Pollutants

The SIP establishes procedures to implement water quality criteria from the NTR and CTR and for priority, toxic pollutant objectives established in the Basin Plan. The implementation procedures of the SIP include methods to determine reasonable potential (for pollutants to cause or contribute to excursions above State water quality standards) and to establish numeric effluent limitations, if necessary, for those pollutants showing reasonable potential.

Section 1.3 of the SIP requires the Regional Water Board to use all available, valid, relevant, and representative receiving water and effluent data and information to conduct an RPA. During the term of the previous permit discharges to surface water occurred only at Discharge Point 012B. Accordingly for this RPA, Regional Water Board staff used effluent and receiving water data at Discharge Point 012B from April 2010 through April 2011 for the RPA for Discharge Point 012B. Because discharges from Discharge Point 012 A(2) also occur from the same storage pond as discharges from 012B, Regional Water Board staff determined the data to be representative for discharges at 012A(2), also.

For Discharge Points 006A, 006B, and 012A(1), actual effluent monitoring data were not available because surface water discharges from these locations did not

occur during the term of the previous permit. In the absence of recent monitoring data for these discharge locations, Regional Water Board staff conducted the RPA for these locations using effluent data from Monitoring Location EFF-001 (formerly M-001) to represent assumed effluent quality for these discharges. Regional Water Board staff determined that effluent data from EFF-001 were representative of storage pond effluent from Discharge Points 006A and 006B because the effluent from these locations is comprised of treated wastewater prior to its distribution to Meadow Lane Pond D. In the case of Discharge Point 012A(1), in the event that the Permittee discharges from this location, effluent from this distribution trunk line is comprised entirely of treated wastewater without dilution in Delta Pond.

Hardness:

The California Toxics Rule and the National Toxics Rule contain water quality criteria for seven metals that vary as a function of hardness, the lower the hardness, the lower the water quality criteria. The hardness-dependent metal criteria include cadmium, copper, chromium III, lead, nickel, silver, and zinc.

Effluent limitations for the discharge must be set to protect the beneficial uses of the receiving water for all discharge conditions. Effluent limitations must be set using a reasonable worst-case condition in order to protect beneficial uses for all discharge conditions. The SIP does not address how to determine hardness for application to the equations for the protection of aquatic life when using hardness-dependent metals criteria. It simply states, in Section 1.2, that the criteria shall be properly adjusted for hardness using the hardness of the receiving water. The CTR requires that, for waters with a hardness of 400 mg/L (as $CaCO_3$), or less, the actual ambient hardness of the surface water must be used. It further requires that the hardness values used must be consistent with the design discharge conditions for design flows and mixing zones (See 40 CFR 131.38(c)(4)(i)). The CTR does not define whether the term "ambient", as applied in the regulations, necessarily requires the consideration of the upstream as opposed to downstream hardness conditions.

State Water Board Order No. WQ 2008-0008 (City of Davis) further interpreted the SIP by stating "*…the regional water boards have considerable discretion in the selection of hardness. Regardless of which method is used for determining hardness, the selection must be protective of water quality criteria, given the flow conditions under which a particular hardness exists….Regardless of the hardness used, the resulting limits must always be protective of water quality under all flow conditions.*"

The point in the receiving water affected by the discharge is downstream of the discharge. As the effluent mixes with the receiving water, the hardness of the receiving water can change. Therefore, where reliable, representative data are available, it is appropriate to use the ambient hardness downstream of the discharge that is a mixture of the effluent and receiving water for the determination of the CTR hardness-dependent metals criteria.

A 2006 Study (*Emerick, R.W.; Booroum, Y.; & Pedri, J.E., 2006. California and National Toxics Rule Implementation and Development of Protective Hardness Based Metal Effluent Limitations,* WEFTEC, Chicago, Ill.) demonstrates that using the lowest recorded receiving water hardness for establishing water quality criteria is not always protective of the receiving water under various mixing conditions (e.g., when the effluent hardness is less than the receiving water hardness).

The 2006 study evaluated the relationships between hardness and the CTR metals criterion that is calculated using the CTR metals equation. The equation describing the total recoverable regulatory criterion, as established in the CTR, is as follows:

CTR Criterion = WER x ($e^{m[\ln(H)]+b}$) (Equation 1)

Where:

WER = water effect ratio
H = Hardness
b = metal- and criterion-specific constant
m = metal- and criterion-specific constant

In accordance with the CTR, the default value for the WER is 1. A permittee-specific WER study must be conducted in order to use a WER value other than 1. The constants "m" and "b" are specific to both the metal under consideration, and the type of total recoverable criterion (i.e., acute or chronic). The metal-specific values for these constants are provided in the CTR at paragraph (b)(2), Table 1.

The relationship between hardness and the resulting criterion in Equation 1 can exhibit either a downward –facing (i.e., concave downward) or an upward-facing (i.e., concave upward) curve depending on the values of the criterion-specific constants. The curve shapes for acute and chronic criteria for the metals are as follows:

Concave Downward Metals: acute and chronic chromium (III), copper, nickel, and zinc; and chronic cadmium.

For those contaminants where the regulatory criteria exhibit a concave downward relationship as a function of hardness, any mixture of receiving water that is compliant with water quality objectives for that metal and effluent that is compliant with water quality objectives for that metal will always result in a mixture that is compliant with water quality objectives and use of the lowest recorded effluent hardness for establishment of water quality objectives is fully protective of all beneficial uses regardless of whether the effluent or receiving water hardness is higher. Use of the lowest recorded effluent hardness is also protective under all possible mixing conditions between the effluent and the receiving water (i.e., from high dilution to no dilution).

Concave Upward Metals: cadmium (acute), lead, and silver (acute).

For Concave Upward Metals, the 2006 Study demonstrates that due to a different relationship between hardness and the metals criteria, the effluent and upstream receiving water can be in compliance with the CTR criteria, but the resulting mixture may be out of compliance. The 2006 Study provides a mathematical approach to calculate the final effluent limitations for Concave Upward Metals that are based on the lowest of receiving water and effluent hardness.

For this RPA, effluent hardness was not available. The minimum observed upstream hardness was used for all metals. The minimum hardness observed upstream of Discharge Point 012B was 67.4 mg/L as CaCO3, and the minimum observed hardness upstream of Discharge Point 015 was 67.4 mg/L.

To conduct each RPA, Regional Water Board staff identified the maximum effluent concentration (MEC) and maximum background (B) concentration for each priority, toxic pollutant from effluent and receiving water data provided by the Permittee, and compared this information to the most stringent applicable water quality criterion (C) for each pollutant with applicable water quality criteria from the NTR, CTR, and the Basin Plan. Section 1.3 of the SIP establishes three triggers for a finding of reasonable potential.

Trigger 1. If the MEC is greater than C, there is reasonable potential, and an effluent limitation is required.

Trigger 2. If B is greater than C, and the pollutant is detected in effluent (MEC > ND), there is reasonable potential, and an effluent limitation is required.

Trigger 3. After a review of other available and relevant information, a permit writer may decide that a WQBEL is required. Such additional information may include, but is not limited to: the facility type, the discharge type, solids loading analyses, lack of dilution, history of compliance problems, potential toxic impact of

the discharge, fish tissue residue data, water quality and beneficial uses of the receiving water, CWA 303 (d) listing for the pollutant, and the presence of endangered or threatened species or their critical habitat.

c. Reasonable Potential Determination for Priority Pollutants

Based on effluent data from Monitoring Location EFF-001 (formerly M-001), the RPA demonstrated reasonable potential for discharges from the Subregional System to cause or contribute to exceedances of applicable water quality criteria for chlorodibromomethane and dichlorobromomethane at Discharge Point 015, and at Discharge Points 006A, 006B, and 012A(1). Reasonable potential could not be determined for all pollutants, as there are not applicable water quality criteria for all pollutants. The RPA determined that there is either no reasonable potential or there was insufficient information to conclude affirmative reasonable potential for the remainder of the 126 priority pollutants.

The following tables summarize the RPA for each priority pollutant that was reported in detectable concentrations in the effluent or the receiving water. The MECs, most stringent water quality objectives/water quality criteria (WQO/WQCs), and background concentrations (B) used in the RPA are presented, along with the RPA results (Yes or No and which trigger) for each toxic pollutant analyzed. No other pollutants with applicable, numeric water quality criteria from the NTR, CTR, and the Basin Plan were measured above detectable concentrations during the monitoring events conducted by the Permittee. Table F-13 of this Fact Sheet summarizes the RPA for all 126 priority pollutants.

Table F-6. Summary of RPA Results – Discharge Points 006A, 006B, 012A(1), and 015

CTR #	Priority Pollutants	C or Most Stringent WQO/WQC (µg/L)	MEC or Minimum DL (µg/L) [1]	B or Minimum DL (µg/L) [1]	RPA Results [2]
1	Antimony	6	0.46	<0.12	No
2	Arsenic	50	1.9	1.1	No
3	Beryllium	4	0.08	0.02	No
4	Cadmium	1.8	0.051	<0.016	No
5a	Chromium (III)	150	--	--	No
5b	Chromium (VI)	11	0.84	3	No
6	Copper	6.7	4.3	3.6	No
7	Lead	1.9	0.31	0.47	No
8	Mercury	0.050	0.00276	0.00609	No
9	Nickel	37	4	5.2	No
10	Selenium	5.0	0.8	0.21	No

Table F-6. Summary of RPA Results – Discharge Points 006A, 006B, 012A(1), and 015

CTR #	Priority Pollutants	C or Most Stringent WQO/WQC (µg/L)	MEC or Minimum DL (µg/L) [1]	B or Minimum DL (µg/L) [1]	RPA Results [2]
11	Silver	2.1	0.5	<0.039	No
12	Thallium	1.7	0.14	<0.11	No
13	Zinc	86	41.9	5.9	No
14	Cyanide	5.2	2.32	<1	No
23	Chlorodibromomethane	0.40	0.6	<0.05	Yes (Trigger 1)
26	Chloroform	No Criteria	10.8	<0.07	No
27	Dichlorobromomethane	0.56	2.46	<0.08	Yes (Trigger 1)
36	Methylene Chloride	4.7	0.27	<0.11	No
39	Toluene	150	0.23	0.17	No
55	2,4,6-Trichlorophenol	2.1	0.16	<0.13	No
68	Bis(2-ethylhexyl)phthalate	1.8	2	1.7	Ud[3]
81	Di-n-Butyl Phthalate	2,700	0.88	0.85	No

Table Notes

1. The Maximum Effluent Concentration (MEC) or maximum background concentration (B) is the actual detected concentration, including estimated concentrations, unless it is preceded by "<", in which case the value shown is the minimum detection level as the analytical result was reported as not detected (ND).
2. RPA Results:
   = Yes, if MEC > WQO/WQC, or B > WQO/WQC and MEC is detected;
   = No, if MEC and B are < WQO/WQC or all effluent data are undetected;
   = Undetermined (Ud), if insufficient data are available or if the quality of the data is questionable.
3. The Permittee submitted a report to the Regional Water Board on March 29, 2012, identifying significant and consistent contamination in method, trip, and equipment laboratory blanks for this constituent. The information provided is sufficient to determine that no Reasonable Potential exists for this constituent

Table F-7. Summary of RPA Results – Discharge Points 012A(2) and 012B

CTR #	Priority Pollutants	C or Most Stringent WQO/WQC (µg/L)	MEC or Minimum DL (µg/L) [1]	B or Minimum DL (µg/L) [1]	RPA Results [2]
1	Antimony	6	0.28	<0.12	No
2	Arsenic	50	1.9	1.1	No
3	Beryllium	4	0.018	0.02	No
4	Cadmium	1.8	0.025	<0.016	No
5b	Chromium (VI)	11	0.75	3	No
6	Copper	6.7	2.9	3.6	No

Table F-7. Summary of RPA Results – Discharge Points 012A(2) and 012B

CTR #	Priority Pollutants	C or Most Stringent WQO/WQC (µg/L)	MEC or Minimum DL (µg/L) [1]	B or Minimum DL (µg/L) [1]	RPA Results [2]
7	Lead	1.9	0.27	0.47	No
8	Mercury	0.050	0.00164	0.00609	No
9	Nickel	37	6.4	5.2	No
10	Selenium	5.0	0.38	0.21	No
13	Zinc	86	15.6	5.9	No
26	Chloroform	No Criteria	0.23	0.07	No
27	Dichlorobromomethane	0.56	0.26	0.08	No
39	Toluene	150	0.15	0.17	No
46	2,4-Dichlorophenol	93	0.17	<0.16	No
68	Bis(2-ethylhexyl)phthalate	1.8	2.28	1.7	Ud [3]
70	Butylbenzyl Phathalate	3,000	1.49	<0.54	No
76	1,3-Dichlorobenzene	400	0.64	0.75	No
81	Di-n-Butyl Phthalate	2,700	0.93	0.85	No

Table Notes

1. The Maximum Effluent Concentration (MEC) or maximum background concentration (B) is the actual detected concentration, including estimated concentrations, unless it is preceded by "<", in which case the value shown is the minimum detection level as the analytical result was reported as not detected (ND).
2. RPA Results:
   = Yes, if MEC > WQO/WQC, or B > WQO/WQC and MEC is detected;
   = No, if MEC and B are < WQO/WQC or all effluent data are undetected;
   = Undetermined (Ud), if insufficient data are available or if the quality of the data is questionable.
3. The Permittee submitted a report to the Regional Water Board on March 29, 2012, identifying significant and consistent contamination in method, trip, and equipment laboratory blanks for this constituent. The information provided is sufficient to determine that no Reasonable Potential exists for this constituent

4. WQBEL Calculations

a. For this Order, final effluent limitations for total nitrogen were derived based on Facility performance using available effluent monitoring data at Monitoring Location EFF-012B (formerly M-005) for nitrate from January 2007 through April 2012 and adding to each nitrate result the calculated average effluent Total Kjeldahl Nitrogen (TKN) concentration of 1.3 mg/L from September 2006 through August 2010 to arrive at an estimated total nitrogen concentration. A concentration-based effluent limitation was calculated using the concepts described in Appendix E of the USEPA document titled *Technical Support Document for Water Quality-Based Toxics Control*, March 1991. The upper 95th percentile limit (upper 95 percent confidence bound) of a lognormal sample distribution was calculated using reported data and

the statistical program RPcalc ((n=23, $\bar{x}$=9.2, s.d.=0.6, CV=0.065). The 95th percentile value of 10.6 mg/L was then established for total nitrogen as a performance-based AMEL.

b. Final WQBELs for chlorodibromomethane and dichlorobromomethane were determined using the methods described in Section 1.4 of the SIP.

Step 1: To calculate the effluent limits, an effluent concentration allowance (ECA) is calculated for each pollutant found to have reasonable potential using the following equation, which takes into account dilution and background concentrations:

ECA = C + D (C – B), where

C = the applicable water quality criterion (adjusted for receiving water hardness and expressed as the total recoverable metal, if necessary)

D = the dilution credit (here D = 0, as the discharge does not qualify for a dilution credit)

B = the background concentration

Because no credit for dilution is being allowed, D=0, and the ECA is equal to the applicable criterion (ECA = C).

Step 2: For each ECA based on an aquatic life criterion/objective, the long term average discharge condition (LTA) is determined by multiplying the ECA by a factor (multiplier), which adjusts the ECA to account for effluent variability. The multiplier depends on the coefficient of variation (CV) of the data set and whether it is an acute or chronic criterion/objective. Table 1 of the SIP provides pre-calculated values for the multipliers based on the values of the CV. When the data set contains less than 10 sample results, or when 80 percent or more of the data set is reported as non-detect (ND), the CV is set equal to 0.6. Derivation of the multipliers is presented in section 1.4 of the SIP.

Step 3: WQBELs, including an average monthly effluent limitation (AMEL) and a maximum daily effluent limitation (MDEL) are calculated using the most limiting (lowest) LTA. The LTA is multiplied by a factor that accounts for averaging periods and exceedance frequencies of the effluent limitations, and for the AMEL, the effluent monitoring frequency. The 99th percentile occurrence probability was used to determine the MDEL multiplier and a 95th percentile occurrence probability was used to determine the AMEL multiplier.

Step 4: When the most stringent water quality criterion/objective is a human health criterion/objective (i.e., chlorodibromomethane, dichlorobromomethane, and bis(2-ethylhexyl)phthalate), the AMEL is set equal to the ECA. AMEL and MDEL multipliers are determined based on CV and are from Table 2 of the SIP. Final WQBELs for chlorodibromomethane and dichlorobromomethane are determined as follows:

Table F-8. Determination of Final WQBELs Based on Human Health Criteria

Pollutant	Units	CV	ECA	AMEL Mult95	MDEL Mult99	MDEL/ AMEL	MDEL	AMEL
Discharge Points 006A, 006B, 12A(1), and 015								
Chlorodibromomethane	µg/L	1.02	0.40	1.97	5.01	2.55	1.0	0.40
Dichlorobromomethane	µg/L	0.76	0.56	1.71	3.84	2.24	1.3	0.56

A summary of WQBELs established by this Order is given in the table below.

Summary of Numeric Water Quality-based Effluent Limitations

Table F-9. Summary of Numeric WQBELs

Parameter	Units	Effluent Limitations				
		Average Monthly	Average Weekly	Maximum Daily	Instantaneous Minimum	Instantaneous Maximum
Discharge Points 006A, 006B, 012A(1), and 015						
Chlorodibromomethane	µg/L	0.40	--	1.0	--	--
Dichlorobromomethane	µg/L	0.56	--	1.3	--	--
Total Nitrogen	mg/L	10.6	--	--	--	--
Discharge Points 012A(2), and 012B						
Total Nitrogen	mg/L	10.6	--	--	--	--

5. Whole Effluent Toxicity (WET)

Effluent limitations for whole effluent, acute toxicity and monitoring triggers for chronic toxicity, protect the receiving water from the aggregate effect of a mixture of pollutants that may be present in effluent. There are two types of WET tests – acute and chronic. An acute toxicity test is conducted over a short time period and measures mortality. A chronic test is conducted over a longer period of time and may measure mortality, reproduction, and/or growth.

WET requirements are derived from the CWA and the Basin Plan. The Basin Plan establishes a narrative water quality objective for toxicity that states "*All waters shall*

be maintained free of toxic substances in concentrations that are toxic to, or that produce detrimental physiological responses in human, plant, or aquatic life." Detrimental responses may include, but are not limited to, decreased growth rate, decreased reproductive success of resident or indicator species, and/or significant alterations in population, community ecology, or receiving water biota. For compliance with the Basin Plan's narrative toxicity objective, this Order requires the Permittee to conduct WET testing for acute and chronic toxicity, as specified in the MRP (Attachment E, section V).

The Basin Plan states "… effluent limits based upon acute bioassays of effluent will be prescribed." USEPA Region 9 provided guidance for the development of acute toxicity effluent limitations in the absence of numeric water quality objectives for toxicity in its document titled "Guidance for NPDES Permit Issuance", dated February 1994. In section B.2 "Toxicity Requirements", the USEPA document states that, "In the absence of specific numeric water quality objectives for acute and chronic toxicity, the narrative criterion 'no toxics in toxic amounts' applies. Achievement of the narrative criterion, as applied herein, means that ambient waters shall not demonstrate for acute toxicity: 1) less than 90 percent survival, 50 percent of the time, based on the monthly median, or 2) less than 70 percent survival, 10 percent of the time, based on any monthly median. For chronic toxicity, ambient waters shall not demonstrate a test result of greater than 1 TUc."

Notification requirements for acute and chronic WET testing include a 72 hour verbal notification requirement and a 14 day written report requirement, if test results indicate toxicity. The 14 day written notification is established in the USEPA WET Guidance documents cited in the MRP. The 72 hour verbal notification requirement is being added to provide the Regional Water Board with knowledge of the toxicity in advance of the written report. The 72 hour requirement is intended to give the Permittee sufficient time to make a telephone call to Regional Water Board staff and accounts for non-working days (e.g., weekends). Verbal notification of WET test exceedances may be left by voice mail if the Regional Water Board staff person is not immediately available by telephone.

a. Acute Aquatic Toxicity

Consistent with WDR Order No. R1-2006-0045, this Order includes an effluent limitation for acute toxicity. In accordance with the February 1994 USEPA guidance document cited two paragraphs above, effluent limitations for acute toxicity have been included in this Order which require that the average survival of test organisms in undiluted effluent for any three consecutive 96-hour bioassay tests be at least 90 percent, with no single test having less than 70 percent survival.

This Order also implements federal guidelines (Regions 9 and 10 Guidelines for Implementing Whole Effluent Toxicity Testing Programs) by requiring permittees to conduct acute toxicity tests on a fish species and on an invertebrate to determine the most sensitive species. According to the USEPA manual, *Methods for Estimating the Acute Toxicity of Effluents and Receiving Waters to Freshwater and Marine Organisms* (EPA/600/4-90/-27F), the acceptable vertebrate species for the acute toxicity test are the fathead minnow, *Pimephales promelas* and the rainbow trout, *Oncorhynchus mykiss*. The acceptable invertebrate species for the acute toxicity test are the water flea, *Ceriodaphnia dubia*, *Daphnia magna*, and *D. pulex*.

The Permittee conducted acute toxicity tests on its effluent using the rainbow trout, *Oncorhynchus mykiss* and *Ceriodaphnia dubia* through 2007 to identify the most sensitive species. Because neither species exhibited toxicity, the Permittee continued testing with the rainbow trout. The Permittee consistently maintained compliance with the acute toxicity limitations during the term of the previous permit. All acute toxicity testing results during the term of the previous permit were 100 percent survival.

b. Chronic Aquatic Toxicity

The SIP requires the use of short-term chronic toxicity tests to determine compliance with the narrative toxicity objectives for aquatic life in the Basin Plan. The SIP requires that the Permittee demonstrate the presence or absence of chronic toxicity using tests on the fathead minnow, *Pimephales promelas*, the water flea, *Ceriodaphnia dubia*, and the freshwater alga, *Selenastrum capricornutum (*also named *Raphidocelis subcapitata*).

The Permittee conducted chronic toxicity testing using the fathead minnow, and did not identify chronic toxicity in the seven tests conducted. In February 2008, chronic tests performed on effluent discharged at Discharge Point 012B indicated toxicity to *Selanastrum capricornutum* and *Ceriodaphnia dubia* despite no previous indications of toxicity. Accelerated monitoring in March 2008 and April 2010 during discharge events indicated toxicity to *Ceriodaphnia dubia* in one of four tests, but none for *Selanastrum capricornutum*. Pursuant to the requirements of WDR Order No. R1-2006-0045, the Permittee submitted a Toxicity Reduction Evaluation (TRE) action plan to the Water Board on June 23, 2010. As per this plan, the City conducted 12 further toxicity tests during the non-discharge season. These tests were conducted during a time when no effluent was being added to Delta Pond, so all tests were essentially on one sample with repeated subsamples. These tests were conducted on both surface and subsurface samples of Delta Pond to determine if toxicity varied with location within the Pond. No consistent

toxicity by test species or sample location was identified. In addition, replicate samples sent to different commercial laboratories yielded inconsistent results. The Permittee conducted four subsequent toxicity tests in 2011 with the intention of conducting a Toxicity Identification Evaluation (TIE) as per the Toxicity Reduction Evaluation (TRE) Work Plan submitted to the Regional Water Board in March 2007. However, no toxicity was observed, so a TIE could not be conducted.

The Permittee's chronic toxicity monitoring results for *C. dubia* and *S. capracornutum* are summarized in the table below.

Table F-10. Whole Effluent Chronic Toxicity Monitoring Results

Date	*Selenastrum capricornutum*				*Ceriodaphnia dubia*			
	Growth				Survival		Reproduction	
	NOEC	TUc	IC25	TUc	NOEC	TUc	NOEC	TUc
2/4/2008	100	1	93.6	1.1	75	1.3	100	1
3/14/2008	100	1	cnbc	<1	100	1	100	1
3/14/2008	100	1	cnbc	<1	100	1	100	1
4/12/2010	100	1	>100	<1	100	1	100	1
4/27/2010	100	1	>100	<1	100	1	75	1.3
6/14/2010	100	1	92.8	1.1	100	1	100	1
6/14/2010	75	1.3	72.9	1.4	100	1	100	1
6/21/2010	100	1	93.9	1.1	100	1	100	1
6/21/2010	100	1	100	<1	100	1	100	1
7/6/2010	100	1	100	<1	100	1	100	1
7/6/2010	100	1	>100	<1	100	1	75	1.3
7/6/2010	100	1	100	<1	100	1	100	1
7/6/2010	100	1	>100	<1	100	1	25	4
7/19/2010	100	1	94	1.1	100	1	100	1
7/19/2010	100	1	>100	<1	100	1	75	1.3
7/19/2010	100	1	94.7	1.1	100	1	>100	1
1/24/2011	100	1	>100	<1	100	1	100	1
2/22/2011	100	1	>100	<1	100	1	100	1
3/21/2011	100	1	>100	<1	100	1	100	1
4/6/2011	100	1	>100	<1	100	1	100	1

Note: cnbc means "could not be calculated"

Chronic toxicity effluent limitations have not been included in this Order for consistency with the SIP, which implements narrative toxicity objectives in Basin Plans and specifies use of a numeric trigger for accelerated monitoring and implementation of a TRE in the event that persistent toxicity is detected. The SIP contains implementation gaps regarding the appropriate form and implementation of chronic toxicity limits. This has resulted in a petition for State

Water Board review of a NPDES permit in the Los Angeles Region that contained numeric chronic toxicity effluent limitations. To address the petition, the State Water Board adopted WQO 2003-0012 directing its staff to revise the toxicity control provisions in the SIP. The State Water Board states the following in WQO 2003-0012, "*In reviewing this petition and receiving comments from numerous interested persons on the propriety of including numeric effluent limitations for chronic toxicity in NPDES permits for publicly-owned treatment works, that discharge to inland waters, we have determined that this issue should be considered in a regulatory setting, in order to allow for full public discussion and deliberation. We intend to modify the SIP to specifically address the issue. We anticipate that review will occur within the next year. We therefore decline to make a determination here regarding the propriety of the final numeric effluent limitations for chronic toxicity contained in these permits.*" The process to revise the SIP is underway. Proposed changes include clarifying the appropriate form of effluent toxicity limits in NPDES permits and general expansion and standardization of toxicity control implementation related to the NPDES permitting process. Since the toxicity control provisions in the SIP are under revision, it is infeasible to develop numeric effluent limitations for chronic toxicity at this time. The SIP revision may require a permit modification to incorporate new statewide toxicity criteria established by the upcoming SIP revision.

However, the State Water Board found in WQO-2003-0012 that, while it is not appropriate to include final numeric effluent limitations for chronic toxicity in NPDES permits for POTWs, permits must contain a narrative effluent limitation, numeric benchmarks for triggering accelerated monitoring, rigorous TRE/TIE conditions, and a reopener to establish numeric effluent limitations for either chronic toxicity or the chemical(s) causing toxicity. This Order includes a reopener that allows the Regional Water Board to reopen the permit and include a numeric chronic toxicity limitation, a new acute toxicity limitation, and/or a limitation for a specific toxicant identified in the TRE.

To ensure compliance with the narrative effluent limitation and the Basin Plan's narrative toxicity objective, the Permittee is required to conduct chronic WET testing, as specified in the MRP (Attachment E, section V). Furthermore, Special Provision IV.C.2.a of this Order requires the Permittee to investigate the causes of, and identify and implement corrective actions to reduce or eliminate effluent toxicity. If the discharge demonstrates a pattern of toxicity exceeding the numeric toxicity monitoring trigger, the Permittee is required to initiate a TRE in accordance with an approved TRE workplan. The numeric toxicity monitoring trigger is not an effluent limitation; it is the toxicity threshold at which the Permittee is required to perform accelerated chronic toxicity monitoring, as well

as the threshold to initiate a TRE if a pattern of effluent toxicity has been demonstrated.

Section V.B.9 of the MRP defines the chronic toxicity monitoring trigger as a single sample result of 1.6 TUc and a monthly median of 1.0 TUc and section V.C.1.g of the MRP requires TUc to be calculated as 100/NOEC for purposes of determining if the Permittee's effluent exceeds the chronic toxicity monitoring trigger. Although the federal requirements may provide for flexibility in determining how to calculate TUc for compliance purposes (e.g., 100/NOEC, 100/IC25, 100/EC25), USEPA Region 9 recommends that effluent limitations and triggers be based on the no observed effect concentration (NOEC) when the permit language and chronic toxicity testing methods incorporate important safeguards that improve the reliability of the NOEC. These safeguards include the use of a dilution series (testing of a series of effluent concentrations) to verify and quantify a dose-response relationship and a requirement to evaluate specific performance criteria in order to determine the sensitivity of each chronic toxicity test. The goal is to demonstrate that each test is sensitive enough to determine whether or not the effluent is toxic or not.

The use of 100/IC25 or 100/EC25 as methods for calculating chronic toxicity are point estimates that automatically allow for a 25 percent effect before calling an effluent toxic. The Basin Plan has a narrative objective for toxicity that requires that "*all waters be maintained free of toxic substances in concentrations that are toxic to, or that produce detrimental physiological responses in human, plant, animal, or aquatic life*." Allowance of a possible 25 percent effect would not meet the Basin Plan's narrative toxicity requirement. In addition, California has historically used the NOEC to regulate chronic toxicity for ocean discharges, thus it is fitting that the same method be used to regulate chronic toxicity in inland surface water discharges.

Because no dilution has been granted for the chronic condition, chronic toxicity testing results exceeding 1.6 TUc as a single sample result and 1.0 TUc as a monthly median triggers the need for accelerated monitoring. Accelerated monitoring is necessary to confirm the continued presence or absence of effluent toxicity and the magnitude of that toxicity, and to determine whether a TRE or other action is needed in response to the initial occurrence of toxicity.

If accelerated sampling of the discharge demonstrates a pattern of toxicity exceeding the chronic toxicity trigger, the Permittee is required to initiate a Toxicity Reduction Evaluation (TRE), in accordance with an approved TRE work plan to determine whether the discharge is contributing chronic toxicity to the receiving water. Special Provision VI.C.2.a.ii requires the Permittee to maintain

the TRE Work Plan to ensure the Permittee has a plan to immediately move forward with the initial tiers of a TRE, in the event effluent toxicity is encountered in the future. The provision also includes a numeric toxicity monitoring trigger and requirements for accelerated monitoring, as well as requirements for TRE initiation if a pattern of toxicity is demonstrated.

c. Ammonia-related Toxicity

The chronic toxicity test shall be conducted without modifications to eliminate ammonia toxicity. Ammonia toxicity in water is due mostly to its un-ionized fraction which is primarily a function of the temperature and the pH of the water being tested. As the pH and temperature increase so does the toxicity of a given concentration of ammonia. In static WET tests, the pH in the test concentrations often increases (drifts) due to the loss of carbon dioxide (CO_2) from the test concentrations as the test chambers are incubated over the test period. This upward drift results in pH values in the test concentrations that often exceed those pH values that could reasonably be expected to be found in the effluent or in the mixing zone under ambient conditions. Un-ionized ammonia toxicity caused by pH drift is considered to be an artifact of test conditions and is not a true measure of the ammonia toxicity likely to occur as the discharge enters the receiving waters. In order to reduce the occurrence of artifactual un-ionized ammonia toxicity, it may be necessary to control the pH in toxicity tests, provided the control of pH is done in a manner that has the least influence on the test water chemistry and on the toxicity of other pH sensitive materials such as some heavy metals, sulfide and cyanide. This Order authorizes the use of pH control procedures where the procedures are consistent with USEPA methods and do not significantly alter the test water chemistry so as to mask other sources of toxicity.

D. Final Effluent Limitations

1. Satisfaction of Anti-Backsliding Requirements

Sections 402(o)(2) and 303(d)(4) of the CWA and federal regulations at 40 CFR 122.44(l) prohibit backsliding in NPDES permits. These anti-backsliding provisions require effluent limitations in a reissued permit to be as stringent as those in the previous permit, with some exceptions where limitations may be relaxed. All effluent limitations in this Order are at least as stringent as the effluent limitations in the previous Order, except for the effluent limitations for copper, lead, nickel and cyanide, total nitrogen, nitrate, and mass limitations for BOD_5 and TSS.

The previous Order contained floating effluent limitations for copper, nickel, and lead, and limits for cyanide, which were based on the CTR criteria for the protection of aquatic life. The previous Order also contained an effluent limitation for nitrate at

Discharge Point 012B based on the human health criterion contained in title 22. As described in the Order in sections IV.C.3.a.iv for nitrate and section IV.3.b form CTR priority pollutants, effluent data demonstrate that concentrations of these pollutants in the effluent no longer demonstrate reasonable potential to cause or contribute to exceedances of water quality objectives. The lack of reasonable potential for copper, lead, nickel, cyanide and nitrate constitutes new information, which permits the removal of effluent limitations consistent with CWA section 402(o)(2)(B). As a result of the RPA, effluent limitations for copper, nickel, lead and cyanide are not proposed in this Order and anti-backsliding requirements are satisfied.

The previous Order contained a final effluent limitation for total nitrogen, expressed as "zero, or no net loading." The limitation was based on information available at the time the Order was issued about the nature of the nitrogen impairment of the Laguna de Santa Rosa, and about how the Permittee's discharges affected that impairment. Regional Water Board staff has since conducted further research and analysis, and has concluded that excessive instream phosphorus concentrations, not nitrogen, is the primary driver of biostimulatory response in the greater Laguna de Santa Rosa watershed and reductions in nitrogen loads beyond current levels are not expected to result in added protection of the beneficial uses, or significant water quality improvements. Consequently, Regional Water Board staff has determined that there is no reasonable potential for the Permittee to discharge nitrogen at a level that may cause or contribute to an excursion above the Basin Plan's water quality objective for biostimulatory substances. The relaxation of effluent limitations for total nitrogen in this Order is consistent with CWA section 402(o)(2)(B), because Regional Water Board staff has used new information that was not available at the time the previous Order was issued and which would have justified the application of a less stringent limitation at that time. Furthermore, as the State Board has noted in Order Nos. WQ-2001-16 and WQ-2003-12, it is questionable whether the deletion of effluent limits for which there is no reasonable potential is found falls under the backsliding rule. Regardless, as explained above, the removal of the effluent limits complies with the anti-backsliding rule.

The previous Order contained mass-based effluent limitations for BOD_5 and TSS that applied when the Permittee was discharging treated effluent to any of its authorized surface water discharge points. The draft Order removes mass limitations for discharges of treated wastewater because Regional Water Board staff misinterpreted the exception in 40 CFR 122.45(f)(2), which states that mass limitations are not required for (1) pH, temperature, radiation, or other pollutants which cannot be appropriately expressed by mass, and (2) when applicable standards and limitations are expressed in terms of other units of measure." Staff should have granted exception No. 2, because secondary treatment standards for BOD_5 and TSS in 40 CFR 133.102, on which the effluent limitations in previous permits were based, are

expressed in concentration and percent removal (i.e., "other units of measure"). The relaxation of effluent limitations for BOD_5 and TSS in this Order is permissible under CWA section 402(o)(2)(B), because Regional Water Board staff has determined that mass limitations for BOD_5 and TSS were applied in the previous permit as a result of a mistaken interpretation of law when issuing the previous permit.

In addition, Regional Water Board staff has previously held that anti-backsliding regulations prevented the removal of mass-based limitations for BOD_5 and TSS because they were appropriate and necessary to protect water quality and prevent water quality degradation in receiving waters such as Santa Rosa Creek, which can be effluent dominated under certain discharge conditions. While it is conceivable that the absence of mass limitations for these pollutants may result in an increased pollutant loading to surface waters, recent self monitoring reports indicate that compliance with concentration-based effluent limitations for BOD_5 and TSS effectively maintain Permittee's mass emission rates for BOD_5 and TSS well below permitted mass-based limitations. In addition, even if there is resulting increase in pollutant load, there is no evidence that the increase will result in degradation of water quality. Therefore, relaxation of effluent limitations for BOD_5 and TSS in this Order is also permissible under CWA section 402(o)(2)(B), based on new information available to Regional Water Board staff.

2. Satisfaction of Antidegradation Policy

<u>Surface Water</u>

This Order is consistent with applicable federal and State antidegradation policies, as it does not authorize the discharge of increased concentrations of pollutants or increased volumes of treated wastewater to surface waters beyond that which was permitted to discharge in accordance with the previous Order and, therefore, will not cause degradation.

This Order authorizes the Permittee to increase its production of recycled water from 21.34 mgd to 25.9 mgd. The increased volume of tertiary treated water will be beneficially reused at multiple Subregional System projects, including the Geysers Recharge Project and the Santa Rosa Urban Reuse Project, and will not result in an increase in discharge volume to surface water from the surface water outfall locations.

The previous Order contained a final seasonal effluent limitation for total nitrogen of "zero, or no net loading" that would become effective on November, 9, 2011, if a WLA had not been established through an approved nitrogen TMDL. The final compliance date was extended by the Regional Board until the conclusion of the 2014-2015 discharge season through the adoption of a Time Schedule Order (Order No. R1-2011-

0103). As a result of a reasonable potential analysis for the renewed Order, Regional Water Board staff determined that there is no reasonable potential for nitrogen compounds to cause or contribute to an exceedance of the narrative biostimulatory substances objective and concluded that reductions in nitrogen loads beyond current levels are not expected to result in added protection of beneficial uses or significant water quality improvements. Thus, additional controls on nitrogen in the Permittee's treated effluent discharge, including the "zero, or no net loading" effluent limitation, beyond current treatment levels are unnecessary.

To maintain treatment at current levels, and thus avoiding any degradation that could occur if discharge levels increased over current performance, this Order includes a final effluent limitation for total nitrogen based on past treatment performance of the WWTP. Because the concentration parameter is a more accurate measure of treatment plant performance than a mass emission rate, which is dependent on flow rate which can vary greatly over time and is largely out of the control of the operator, Regional Water Board staff calculated treatment plant performance for total nitrogen using effluent concentration data for nitrate and TKN obtained from the Permittee's self-monitoring reports and translated the calculated value into a final concentration-based effluent limitation that is protective of water quality and will prevent degradation. Details of the development of the concentration-based WQBEL for total nitrogen are described in section IV.C.4.a of this Fact Sheet.

The increase in application of recycled water to land through irrigation authorized by this Order is not expected to result in degradation to surface water because recycled water will be applied at or below hydraulic agronomic rates and at recycled water reuse sites where proper irrigation system design standards and BMPs are implemented to prevent and/or minimize irrigation runoff.

Groundwater

According to the State Water Board's Recycled Water Policy, the use of recycled water for landscape irrigation in accordance with the Policy is to the benefit of the people of the State of California. Nevertheless, the State Water Board found that the use of recycled water for irrigation may affect groundwater quality over time. It is the intent of the Recycled Water Policy that impacts to groundwater from recycled water projects will be addressed through SNMPs for each basin and/or sub-basin in California.

Under the Policy, recycled water projects may be approved by regional water boards without further antidegradation analysis if the project is within a basin where a SNMP is in place and the project meets the criteria for a streamlined irrigation permit (section 7.c of the Policy). A regional water board may also approve a recycled water project(s) within a basin where an SNMP is being prepared by demonstrating through

a salt/nutrient mass balance or similar analysis that the project uses less than ten percent of the available assimilative capacity as estimated by the project proponent in a basin/sub-basin, or where there are multiple recycled water projects, that the projects use less than twenty percent of the available assimilative capacity as estimated by the project proponent in a basin/sub-basin.

The Permittee is participating in the development of an SNMP for the Santa Rosa Plain Subbasin. As part of the SNMP, a trend analysis was conducted to determine the projected change in total dissolved solids (TDS) and nitrate concentrations in the groundwater basin that will occur with or without additional recycled water use above current levels. The results of the analysis indicate that the fraction of assimilative capacity used by all sources of TDS and nitrate in the basin is 33 percent and five percent, respectively. The Permittee has estimated that the fraction of assimilative capacity attributable to the Permittee's Urban Reuse Project is less than one percent for TDS and less than five percent for nitrate (email from Jennifer Burke, Senior Water Resources Manager for the City of Santa Rosa Utilities Department, May 17, 2013). This information satisfies anti-degradation considerations for the expansion of the Permittee's Urban Reuse Project.

Finally, recycled water requirements in Attachment G require the Permittee to implement management measures and BMPs that ensure that all irrigation occurs in a manner that is protective of groundwater and surface water quality, to the extent practicable.

3. Stringency of Requirements for Individual Pollutants

This Order contains both technology-based effluent limitations and WQBELs for individual pollutants. The terms of this Order meet the minimum federal technology-based effluent limitations for secondary treatment, and in addition include additional requirements, expressed as technology equivalence requirements, for BOD_5, TSS, pH, and total coliform bacteria that are necessary to achieve tertiary treatment of wastewater, consistent with the Basin Plan's requirements that discharges of municipal wastewater into the Russian River and its tributaries be of advanced treated water. Restrictions on these pollutants are discussed in section IV.B in this Fact Sheet.

WQBELs have been scientifically derived to implement water quality objectives that protect beneficial uses. Both the beneficial uses and the water quality objectives have been approved pursuant to federal law and are the applicable federal water quality standards. To the extent that toxic pollutant WQBELs were derived from the CTR, the CTR is the applicable standard pursuant to section 131.38. The scientific procedures for calculating the individual WQBELs for priority pollutants are based on the SIP, which was approved by USEPA on May 18, 2000. Most beneficial uses and water

quality objectives contained in the Basin Plan were approved under state law and submitted to and approved by USEPA prior to May 30, 2000. Any water quality objectives and beneficial uses submitted to USEPA prior to May 30, 2000, but not approved by USEPA before that date, are nonetheless "applicable water quality standards for purposes of the CWA" pursuant to section 131.21(c)(1). The remaining water quality objectives and beneficial uses implemented by this Order (specifically the addition of the beneficial uses Water Quality Enhancement (WQE), Flood Peak Attenuation/Flood Water Storage (FLD), Wetland Habitat (WET), Native American Culture (CUL), and Subsistence Fishing (FISH)) and the General Objective regarding antidegradation) were approved by USEPA on, March 4, 2005, and are applicable water quality standards pursuant to section 131.21(c)(2).

In addition, the Regional Water Board has considered the factors in Water Code section 13263, including the provisions of Water Code section 13241, in establishing these requirements. Factors set forth in section 13241 must be evaluated for requirements that go beyond what is required by the Clean Water Act.

Water Code section 13263 requires that waste discharge requirements "*implement any relevant water quality control plans that have been adopted and take into consideration the beneficial uses to be protected, the water quality objectives reasonably required for that purpose, other waste discharges, the need to prevent nuisance and the provisions of section 13241*." These requirements, however, only apply to those portions of the permit that exceed the requirements of the federal CWA, and not to those requirements that are necessary to meet the technology-based effluent limitations or the WQBELs necessary to protect water quality objectives for surface waters set out in the Basin Plan. (*City of Burbank v. State Water Resources Control Board*, 35 Cal. 4th 613, 627.) In this Order, those requirements that exceed the requirements of the federal CWA are those that solely apply to the land discharge. Nonetheless, the Regional Water Board has attempted to include permit terms that allow for compliance with all applicable federal and state requirements in the most cost effective manner possible.

The Regional Water Board considered the factors set forth in section 13263 and 13241 throughout various portions of the permit, including this Fact Sheet, which contains background information and rationale for the requirements set forth in the permit. Section III.B of this Fact Sheet identifies the beneficial uses identified in the Basin Plan. Section IV of this Fact Sheet sets forth the rationale for the effluent limits, particularly the beneficial uses to be protected and water quality objectives required for that purpose. All effluent limitations established for surface water discharges are required by the CWA, Basin Plan or CTR-SIP. This section of this Fact Sheet sets out a discussion of the factors set forth in 13263 and 13241 considered for the effluent limits on the reclamation discharge.

The Regional Water Board also considered upgrades to the Subregional System performed by the Permittee, along with other waste discharges in the watershed, and concluded that coordinated control of other discharges would not eliminate the need for the requirements on this discharge, particularly given the continued growth in the region and the past, present and probable future uses of the receiving waters and the environmental characteristics, including water quality, of the Laguna hydrologic subarea of the Russian River. The Regional Water Board also considered the need to develop and use recycled water, and the potential for increased reclamation opportunities. The Regional Water Board also considered the need to prevent nuisance, and incorporated discharge prohibitions to protect against nuisance caused by the discharge or use for reclamation of untreated or partially treated waste from anywhere within the collection, treatment or disposal system or from sanitary sewer overflows.

Summary of Final Effluent Limitations

Table F-11. Summary of Final Technology-Based Effluent Limitations

Parameter	Units	Effluent Limitations				Basis[1]	
		Average Monthly	Average Weekly	Maximum Daily	Instantaneous Minimum	Instantaneous Maximum	
BOD_5	mg/L	10	15	--	--	--	AWT
	% Removal	85	--	--	--	--	CFR
TSS	mg/L	10	15	--	--	--	AWT
	% Removal	85	--	--	--	--	CFR
Total Coliform Bacteria	MPN/100 mL	--	2.2[2]	23/240[2]	--	--	AWT
pH	s.u.	--	--	--	6.5	8.5	BP

Table Notes:

1. AWT – Based on the technical capability of an advanced wastewater treatment facility.
   CFR – Based on secondary treatment regulations contained in 40 CFR Part 133.
   BP – Based on the Basin Plan.
2. The median concentration shall not exceed an MPN of 2.2 per 100 mL using daily bacteriological results of the last seven days; the number of total coliform bacteria shall not exceed an MPN of 23 per 100 mL in more than one daily result in any 30-day period; and no one daily result shall exceed 240 MPN/100 mL of total coliform bacteria.

Table F-12. Summary of Final Numeric Water Quality-Based Effluent Limitations

Parameter	Units	Effluent Limitations				Basis[1]
		Average Monthly	Average Weekly	Maximum Daily	Instantaneous Minimum	Instantaneous Maximum
Discharge Points 006A, 006B, 012A(1), and 015						
Chlorodibromomethane	µg/L	0.40	1.0	--	--	CTR
Dichlorobromomethane	µg/L	0.56	1.3	--	--	CTR
Total Nitrogen	mg/L	10.6	--	--	--	BP

Parameter	Units	Effluent Limitations				Basis[1]
Discharge Points 012A(2), and 012B						
Total Nitrogen	mg/L	10.6	--	--	--	BP

Table Notes:
1. CTR – Based on the California Toxics Rule. BP- Based on the Basin Plan.

In addition to the effluent limitations listed in Table F-11 and F-12 above, WQBELs for total phosphorus are established in this Order to ensure compliance with the Basin Plan's narrative water quality objective for biostimulatory substances. Performance-based WQBELs for total nitrogen were established to ensure compliance with the anti-degradation water quality standard.

The Order also includes other requirements for discharges from the Subregional System for filtration that reflect the title 22 requirements for disinfected tertiary wastewater to ensure an essentially pathogen-free effluent.

E. Interim Effluent Limitations – Not Applicable

F. Land Discharge Specifications

This section is not applicable to the Permittee as treated wastewater is not discharged to or applied to land for the purpose of disposal. The Permittee reclaims treated wastewater, thus the Permittee has Reclamation Specifications rather than Land Discharge Specifications.

G. Reclamation Specifications

The Permittee has a reclamation system to irrigate urban and agricultural areas consistent with agronomic demand. Most irrigation occurs from May 15 through September 30.

1. Scope and Authority

Section 13263 of the Water Code requires the Regional Water Board to prescribe requirements for proposed discharges, existing discharges, or material change in an existing discharge based upon the conditions of the disposal area or receiving waters upon or into which the discharge is made or proposed. The prescribed requirements shall implement any relevant water quality control plans that have been adopted, and shall take into consideration the beneficial uses to be protected, the water quality objectives reasonably required for that purpose, other waste discharges, the need to prevent nuisance, and the provisions of Water Code section 13241. In prescribing

requirements, the Regional Water Board is not obligated to authorize the full waste assimilation capacities of the receiving water.

2. **Applicable Beneficial Uses and Water Quality Criteria and Objectives**

   a. **Beneficial Uses.** Beneficial use designations for groundwater established in the Basin Plan include MUN, IND, PRO, AGR, and FRSH.

   b. **Basin Plan Water Quality Objectives.** The Basin Plan contains narrative objectives for tastes and odors, bacteria, radioactivity, and chemical constituents (including those chemicals that adversely affect agricultural water supply) that apply to groundwater.

3. **Determining the Need for Requirements for Water Reclamation**

   The following reclamation specifications apply to effluent discharges at Discharge Points 001 and 002.

   Tertiary Treatment. This Order authorizes water reclamation at urban and agricultural use sites and at the Geysers Recharge Project. Treated wastewater for reclamation may also be used of fire suppression as provided in title 22 of the CCR. All discharges to the water reclamation system, including recycled water to the Geysers Recharge Project and to the Santa Rosa Urban Reuse Project, must comply with effluent reclamation requirements and specifications in section IV.C of this Order. Recycled water not meeting reclamation specifications in section IV.C.2.b (Disinfection) may be reclaimed on suitable City-owned property as long as the reclaimed water meets the Permittee's "Off-Spec Condition Response Plan" and other relevant requirements in title 22.

   a. **Filtration Rate**. This provision requires that wastewater be filtered at a rate that does not exceed 5 gallons per minute per square foot (gal/min/ft^2) of filter surface area, and is based on the definition of filtered wastewater found in title 22, section 60301.320 of the CCR. The title 22 definition is used as a reasonable performance standard to demonstrate that recycled water has been coagulated and adequately filtered for removal of wastewater pathogens and for conditioning of water prior to UV light disinfection process. This Order anticipates that during the term of this permit, CDPH will approve a study prepared by the Permittee that demonstrates adequate performance of the Permittee's tertiary filters at a filter loading rate of up to 7.5 gal/min/ft^2. This Order authorizes conditional approval of the higher loading rate, provided that the Permittee obtains approval of the increase from CDPH and complies with all conditions of approval established by CDPH.

b. **Turbidity.** This provision specifies that the turbidity of the filtered wastewater not exceed an average of 2 NTU within a 24-hour period, 5 NTU more than 5 percent of the time within a 24-hour period, and 10 NTU at any time, and is based on the definition of filtered wastewater found in title 22, section 60301.320 of the CCR. The title 22 definition is used as a reasonable performance standard to ensure adequate removal of turbidity upstream of disinfection facilities. Properly designed and operated effluent filters will meet this standard. The point of compliance for the turbidity requirements is a point following the effluent filters and before discharge to the disinfection system.

c. **WQBEL Calculations.** This section does not apply to the reclamation aspect of the Subregional System. All of the reclamation specifications are based on the technical capabilities of the advanced wastewater treatment system and levels required by the Basin Plan and title 22, thus no calculations were needed to determine the WQBELs.

d. **Reclamation Capacity**. This Order requires that the Permittee maintain, at a minimum, a total reclamation capacity of 4,015 million gallons for Geysers recharge, and maintain the capability to irrigate 2,590 million gallons per year. This provision is consistent with the Incremental Recycled Water Program (IRWP) developed by the Permittee as a means of planning for future flows to the Subregional Water Reclamation System. The Master Plan for the IRWP has been designed to meet the Subregional System's capacity requirements and manages flows with a mixture of conservation and reuse.

   This provision also implements the Regional Water Board's intent for continued application of the Interim Action Plan (1986-1990) for the Santa Rosa Area, which was included in the Basin Plan in 1987 through Regional Water Board Resolution No. 87-58. This provision is retained from the previous Order, but acknowledges that the Permittee will add treatment and/or total reclamation capacity during the term of this permit.

e. **Reclamation Operation**. This Order requires that the Permittee operate its recycled water storage and disposal according to the Permittee's Discharge Management Plan. This provision implements the Regional Water Board's intent for continued application of the Interim Action Plan (1986-1990) for the Santa Rosa Area, which was included in the Basin Plan in 1987 through Regional Water Board Resolution No. 87-58. This provision is retained from the previous Order.

f. **Water Reclamation Requirements and Provisions – Attachment G**

   Attachment G of this Order contains water reclamation findings, requirements and provisions to ensure that recycled water is used in a manner that is protective of

groundwater and surface water quality. A key to reducing the potential for spills is for the implementation of appropriate BMPs to protect against the possibility of recycled water spills. The City's Recycled Water User's Guide contains numerous BMPs that when implemented properly will reduce the potential and severity of recycled water spills and runoff.

The water reclamation requirements of this Order (including Attachment G and section X of the MRP) include requirements for dual-plumbed systems, including requirements for cross-connection prevention because the Subregional System uses recycled water for toilet flushing.

H. Other Requirements

This Order contains additional specifications that apply to the Subregional System regardless of the disposal method (surface water discharge, land disposal, or reclamation), including:

1. Turbidity

Section IV.D.1.c.2 of this Order specifies that the turbidity of the filtered wastewater not exceed an average of 2 NTU during a 24-hour period; 5 NTU more than 5 percent of the time within a 24-hour period, and 10 NTU at any time, and is based on the definition of filtered wastewater found in title 22 section 60301.320 of the CCR. The title 22 definition is used as a reasonable performance standard to ensure adequate removal of turbidity upstream of disinfection facilities. Properly designed and operated effluent filters will meet this standard. The point of compliance for the turbidity requirements is a point following the microfilters. The Permittee plans to use chemical addition to supplement microfiltration if limitations for turbidity are exceeded.

2. Disinfection Process Requirements

a. Ultraviolet Disinfection Process Requirements. This Order also contains new monitoring requirements for the UV disinfection system. These requirements are needed to determine compliance with requirements for recycled wastewater systems, established at CCR title 22, division 4, chapter 3 and to ensure that the disinfection process achieves effective pathogen reduction.

UV system operation requirements are necessary to ensure that adequate UV dosage is applied to the wastewater to inactivate pathogens (e.g. viruses, bacteria) in the wastewater. UV dosage is dependent on several factors such as UV transmittance, UV power setting, and wastewater flow through the UV System. Minimum dosage requirements are based on recommendations by the CDPH and

guidelines established by the National Water Research Institute (NWRI) and American Water Works Association Research Foundation's (NWRI/AWWARF) "Ultraviolet Disinfection Guidelines for Drinking Water and Water Reuse" first published in December 2000 revised as a Second Edition dated May 2003. Furthermore, a Memorandum dated November 1, 2004 issued by CDPH to Regional Water Board Executive Officers recommended that provisions be included in permits for water recycling treatment plants employing UV disinfection requiring permittees to establish fixed cleaning frequency of quartz sleeves as well as include provisions that specify minimum delivered UV dose that must be maintained (as recommended by the NWRI/AWWARF UV Disinfection Guidelines). Minimum UV dosage requirements specified in Effluent Limitations and Discharge Specifications Section IV.D.2 ensures that adequate disinfection of wastewater will be achieved.

V. RATIONALE FOR RECEIVING WATER LIMITATIONS

A. Surface Water

CWA section 303(a-c) requires states to adopt water quality standards, including criteria where they are necessary to protect beneficial uses. The Regional Water Board adopted water quality criteria as water quality objectives in the Basin Plan. The Basin Plan states that "[t]*he numerical and narrative water quality objectives define the least stringent standards that the Regional* [Water] *Board will apply to regional waters in order to protect the beneficial uses*." The Basin Plan includes numeric and narrative water quality objectives for various beneficial uses and water bodies. This Order contains Receiving Surface Water Limitations based on the Basin Plan numerical and narrative water quality objectives for biostimulatory substances, chemical constituents, color, dissolved oxygen, floating material, oil and grease, pH, pesticides, radioactivity, sediment, settleable material, suspended material, tastes and odors, temperature, toxicity, and turbidity.

The receiving water limitation for temperature in this Order includes a requirement that the 7-day average of daily maximum measurements of the receiving water not exceed 64.4°F (or 18°C). This numeric limitation is not contained in the Basin Plan, but is necessary to ensure that any alteration to the natural receiving water temperature caused by the discharge does not adversely affect beneficial uses. USEPA Region 10 Guidance (EPA 910-B-03-002) sets a temperature standard for support of salmonids at a 7-day average of the daily maximum temperature of 18°C for non-core rearing habitat. This receiving limitation in this Order is consistent with USEPA guidance and fully protects beneficial uses.

B. Groundwater

1. The beneficial uses of the underlying ground water are municipal and domestic supply, industrial service supply, industrial process supply, agricultural supply, and freshwater replenishment to surface waters.

2. Groundwater limitations are required to protect the beneficial uses of the underlying groundwater.

3. Discharges from the Subregional System shall not cause exceedance of applicable water quality objectives or create adverse impacts to beneficial uses of groundwater.

4. The Basin Plan requires that waters designated for use as MUN shall not contain concentrations of chemical constituents in excess of the limits specified in California Code of Regulations, title 22, , division 4, chapter 15, article 4.1, section 64435, and article 5.5, section 64444, and listed in Table 3-2 of the Basin Plan.

VI. RATIONALE FOR MONITORING AND REPORTING REQUIREMENTS

Section 122.48 requires that all NPDES permits specify requirements for recording and reporting monitoring results. Water Code section 13383 authorizes the Regional Water Board to require technical and monitoring reports. The MRP establishes monitoring and reporting requirements to implement federal and state requirements. The following provides the rationale for the monitoring and reporting requirements contained in the MRP.

A. Influent Monitoring

Influent monitoring requirements for flow, BOD_5, and TSS are retained from the previous permit, WDR Order No. R1-2006-0045 and are necessary to determine compliance with this Order's 85 percent removal requirement for these parameters. Influent monitoring for CTR priority pollutants is established in this Order to assess and track the effectiveness of the Pretreatment Program implementation and to assess the need for establishing or updating local limits. Other monitoring requirements for the industrial pretreatment program are described in section X.D.4 of the MRP.

B. Effluent Monitoring

Effluent monitoring requirements are necessary to determine compliance with prohibitions and/or effluent limitations established by this Order. Monitoring at Monitoring Locations EFF-001, EFF-006A, EFF-006B, EFF-012A(2), and EFF-012B is necessary to demonstrate compliance with technology-based effluent limitations, demonstrate compliance with WQBELs, and demonstrate whether or not the discharge poses reasonable potential for a pollutant to exceed any numeric or narrative water quality objectives.

Most effluent monitoring requirements for discharges from the Subregional System at Discharge Points 006A, 006B, 012A(1), 012A(2), 012B, and 015, at their respective monitoring locations are retained from the previous permit. Changes in effluent monitoring requirements prior to discharge to the storage pond are as follows:

1. Routine (monthly) effluent monitoring for chlorodibromomethane and dichlorobromomethane has been established at EFF-006A and EFF-006B for determination of compliance with the newly established limitations for these parameters at Discharge Points 006A and 006B, and at EFF-001 for determination of compliance at 012A(1), and 015. Routine (weekly) monitoring for bis(2-ethylhexyl)phthalate has been established at EFF-006A, EFF-006B, and EFF-012A(1) for Discharge Points 006A and 006B, and at EFF-001 for Discharge Points 012A(1) and 015 because previous data collected has been determined to be affected by contamination, and therefore additional data needs to be collected for future RPA. Less frequent (quarterly) monitoring for bis(2-ethylhexyl)phthalate is specified at EFF-012A(2) and 012B because the effluent from these discharge locations are better characterized through existing monitoring data.

2. Monthly monitoring for copper, lead, nickel, and cyanide is no longer required because these parameters no longer demonstrate reasonable potential, and therefore limitations for these parameters have not been retained.

3. Routine monitoring for hardness has been reduced in frequency from weekly to quarterly. The previous permit required more frequent monitoring because the previous permit contained floating limitations for metals that were hardness dependent. The limits for metals were not retained because effluent data demonstrate that concentrations in the effluent no longer demonstrate reasonable potential. A reduction in monitoring frequency is therefore appropriate.

4. In accordance with Section 1.3 of the SIP, periodic monitoring is required for CTR priority pollutants for which criteria or objectives apply and for which no effluent limitations have been established. Consistent with WDR Order No. R1-2006-0045, annual CTR monitoring is required during the term of this permit; however, the frequency of monitoring for all of the remaining priority pollutants, except mercury, has been set at quarterly because more frequent monitoring is not necessary as monitoring data collected during the term of the previous permit did not demonstrate reasonable potential for any of these remaining parameters. The monitoring frequency of weekly for total recoverable mercury is retained from the previous Order for all surface water discharge points, even though effluent monitoring results do not indicate reasonable potential based on SIP protocol, because the Laguna de Santa Rosa is listed as impaired for mercury and a recent fish survey conducted by the State Water Board found mercury in fish tissue exceeding the state-recommended

consumption level of 0.44 mg/L in fish caught in the Laguna de Santa Rosa at the Occidental Road Bridge. The Occidental Road Bridge is a popular fishing spot located approximately 1.9 miles upstream of Discharge Point 012B (Delta Pond), the Permittee's primary discharge location, and approximately 2.5 downstream of Discharge Point 006B (Meadow Lane Pond).

5. Effluent monitoring for radioactivity has been established in this Order to demonstrate compliance with water quality objectives for radioactivity in the Basin Plan.

C. Whole Effluent Toxicity Testing Requirements

Whole effluent toxicity (WET) limitations and monitoring requirements are retained from the previous Order and are included in this Order to protect the receiving water quality from the aggregate effect of a mixture of pollutants in the effluent. Acute toxicity testing measures mortality in 100 percent effluent over a short test period and chronic toxicity testing is conducted over a longer time period and may measure mortality, reproduction, and/or growth. This Order includes effluent limitations and monitoring requirements for acute toxicity; as well as monitoring requirements for chronic toxicity to assess compliance with the Basin Plan's narrative water quality objective for toxicity. However, because monitoring data from the previous permit term indicate that acute toxicity was not present in the treated effluent, the monitoring frequency has been reduced from monthly to annually, when a discharge occurs during the discharge season. In addition, Table E-5 and table E-6 include a new chronic toxicity reporting requirement to ensure compliance with the narrative toxicity objective in Receiving Water Limitations V.A.10.

D. Land Discharge Monitoring Requirements

This section is not applicable to the Permittee as treated wastewater is not discharged to or applied to land for the purpose of disposal. The Permittee reclaims treated wastewater, thus the Permittee has Reclamation Monitoring Requirements rather than Land Discharge Monitoring Requirements.

E. Reclamation Monitoring Requirements

This Order requires that the Permittee comply with applicable state and local requirements regarding the production and use of reclaimed wastewater. Monitoring for filter loading rate and turbidity is retained from the previous permit. Monitoring for flow at Discharge Point 001 to the Geysers Recharge Project is newly established by the MRP to determine compliance with section IV.C.3. of this Order.

For discharges to the irrigation system at Discharge Point 002, the Permittee is also required to monitor continuously for flow; report the number of days that treated

wastewater is used for reclamation at all authorized sites; and report the monthly volume and nitrogen application rate for each use site.

This Order includes several new reclamation monitoring requirements including:

1. Monthly monitoring for nitrate, nitrite, ammonia, organic nitrogen. It is necessary to determine the total nitrogen concentration of the effluent in order to ensure application of recycled water at nutrient agronomic rates.

2. Monthly monitoring for total dissolved solids (TDS), chloride, boron, and sodium to determine whether any of these constituents are present in the effluent at concentrations that may exceed water quality objectives for these constituents. TDS is a direct measure of salinity, which can affect underlying groundwater quality as it relates to drinking water and agricultural supply beneficial uses. Secondary MCLs for taste and odor in drinking water have been established by CDPH for TDS (500 mg/L), chloride (250 mg/L) and sodium (60 mg/L). An agricultural water quality limit of 0.7 mg/L has been established for boron. The MRP allows for reduction of monitoring frequency or elimination of the monitoring requirement if monitoring data collected over time demonstrates that any constituent is present in concentrations that could not cause an exceedance of water quality objectives.

3. Visual monitoring of recycled water use sites. During inspections, the Permittee is required to make observations of the recycled water use sites to ensure that recycled water requirements are being met. The purpose of the visual monitoring is to identify any indicators, such as surface runoff, ponding, broken sprinkler heads, sprinklers operating when the ground is saturated, that could result in permit noncompliance and to implement any needed corrective measures.

F. Receiving Water Monitoring

1. Surface Water

Receiving water monitoring requirements are retained from WDR Order No. R1-2006-0045 and are required to demonstrate compliance with Receiving Water Limitations.

Monitoring frequency requirements for hardness have been reduced to quarterly because this Order does not contain limitations for metals that are dependent on the hardness of the receiving water.

2. Groundwater

WDR Order No. R1-2006-0045 did not require groundwater monitoring. Consistent with the previous permit, this Order does not require groundwater monitoring.

Groundwater monitoring may be established in the future, if necessary, to assess impacts of reclamation on groundwater quality.

G. Other Monitoring and Reporting Requirements

1. **Water Reclamation System (Tertiary Filters).** Monitoring requirements for the surface loading rate and effluent turbidity of the tertiary filters are required to demonstrate compliance with sections 60301.230 and 60301.320 requirements for filtered and disinfected tertiary recycled wastewater systems, established in CCR title 22.

2. **Notification and Reporting for Recycled Water Spills**. Section X.E. of the MRP includes reporting requirement for spills of tertiary treated water in excess of 50,000 gallons. This requirement implements Water Code section 13529.2.

VII. RATIONALE FOR PROVISIONS

A. Standard Provisions

1. Federal Standard Provisions

Standard Provisions, which apply to all NPDES permits in accordance with section 122.41, and additional conditions applicable to specified categories of permits in accordance with section 122.42, are provided in Attachment D. The Permittee must comply with all standard provisions and with those additional conditions that are applicable under section 122.42.

Section 122.41(a)(1) and (b) through (n) establish conditions that apply to all State-issued NPDES permits. These conditions must be incorporated into the permits either expressly or by reference. If incorporated by reference, a specific citation to the regulations must be included in the Order. Section 123.25(a)(12) allows the state to omit or modify conditions to impose more stringent requirements. In accordance with section 123.25, this Order omits federal conditions that address enforcement authority specified in sections 122.41(j)(5) and (k)(2) because the enforcement authority under the Water Code is more stringent. In lieu of these conditions, this Order incorporates by reference Water Code section 13387(e).

2. Regional Water Board Standard Provisions

In addition to the Federal Standard Provisions (Attachment D), the Permittee shall comply with the Regional Water Board Standard Provisions provided in Standard Provisions VI.A.2.

a. Order Provision VI.A.2.a identifies the State's enforcement authority under the Water Code, which is more stringent than the enforcement authority specified in the federal regulations [e.g., sections 122.41(j)(5) and (k)(2)].

b. Order Provision VI.A.2.b requires the Permittee to notify Regional Water Board staff, orally and in writing, in the event that the Permittee does not comply or will be unable to comply with any Order requirement. This provision requires the Permittee to make direct contact with a Regional Water Board staff person. This Provision implements federal requirements at section 122.41(I)(6) and (7) for notification of noncompliance and spill reporting.

B. Special Provisions

1. Reopener Provisions

a. Standard Revisions (Special Provision VI.C.1.a). Conditions that necessitate a major modification of a permit are described in section 122.62, which include the following:

i. When standards or regulations on which the permit was based have been changed by promulgation of amended standards or regulations or by judicial decision. Therefore, if revisions of applicable water quality standards are promulgated or approved pursuant to Section 303 of the CWA or amendments thereto, the Regional Water Board will revise and modify this Order in accordance with such revised standards.

ii. When new information that was not available at the time of permit issuance would have justified different permit conditions at the time of issuance.

b. Reasonable Potential (Special Provision VI.C.1.b). This provision allows the Regional Water Board to modify, or revoke and reissue, this Order if present or future investigations demonstrate that the Permittee governed by this Order is causing or contributing to excursions above any applicable priority pollutant criterion or objective, or adversely impacting water quality and/or the beneficial uses of receiving waters.

c. Whole Effluent Toxicity (Special Provision VI.C.1.c). This Order requires the Permittee to investigate the causes of, and identify corrective actions to reduce or eliminate effluent toxicity through a TRE. This Order may be reopened to include a numeric chronic toxicity limitation, a new acute toxicity limitation, and/or a limitation for a specific toxicant identified in the TRE. Additionally, if a numeric chronic toxicity water quality objective is adopted by the State Water Board, this

Order may be reopened to include a numeric chronic toxicity limitation based on that objective.

d. **303(d)-Listed Pollutants (Special Provision VI.C.1.d).** This provision allows the Regional Water Board to reopen this Order to modify existing effluent limitations or add effluent limitations for pollutants that are the subject of any future TMDL action.

e. **Water Effects Ratios (WERs) and Metal Translators (Special Provision VI.C.1.e).** This provision allows the Regional Water Board to reopen this Order if future studies undertaken by the Permittee provide new information and justification for applying a water effects ratio or metal translator to a water quality objective for one or more priority pollutants.

f. **Nutrients (Special Provision VI.C.1.f).** This Order establishes monitoring requirements for the effluent and receiving water for nutrients (i.e., nitrogen compounds and total phosphorus). This provision allows the Regional Water Board to reopen this Order if future monitoring data indicates the need for effluent limitations or more stringent effluent limitations for any of these parameters.

g. **Salt and Nutrient Management Plans (SNMPs) (Special Provision VI.C.1.g)**. This provision allows the Regional Water Board to reopen this Order if it adopts a regional or subregional SNMP that is applicable to the Permittee.

h. **Title 22 Engineering Report (Special Provision VI.C.1.h)**. This provision allows the Regional Water Board to reopen this Order to adequately implement title 22, if future modifications to the Permittee's title 22 engineering report occur.

2. **Special Studies and Additional Monitoring Requirements**

a. **Toxicity Reduction Evaluations (Special Provision VI.C.2.a).** The SIP requires the use of short-term chronic toxicity tests to determine compliance with the narrative toxicity objectives for aquatic life in the Basin Plan. Attachment E of this Order requires acute and chronic toxicity monitoring for demonstration of compliance with the narrative toxicity objective.

In addition to WET monitoring, this provision requires the Permittee to maintain an up-to-date TRE Work Plan for approval by the Executive Officer, to ensure the Permittee has a plan to immediately move forward with the initial tiers of a TRE, in the event effluent toxicity is encountered in the future. The TRE is initiated by evidence of a pattern of toxicity demonstrated through the additional effluent monitoring obtained as a result of an accelerated monitoring program. The TRE

may end if the Permittee can document that the failed toxicity test was the result of a temporary condition or plant upset (e.g., incomplete dechlorination, toxic chemical slug, etc.). In the absence of demonstrating a temporary condition or plant upset, the TRE may also end by demonstrating that less than 20% of the WET tests demonstrate toxicity."

b. **Storage Pond Technical Report (Special Provision VI.C.2.b)** requires the Permittee to review, revise as appropriate and resubmit to the Regional Water Board Executive Officer its Storage Pond Leak Monitoring Program to assist in determining whether the storage ponds are adequately designed to minimize the potential for recycled water to cause adverse impacts to areal groundwater and beneficial uses thereof or are hydrologically connected to surface waters. The results of the monitoring program should demonstrate that storage of treated wastewater is protective of groundwater quality. In addition, groundwater monitoring may be required in the future if necessary.

   This report was originally submitted to the Regional Water Board on May 13, 2011, in compliance with requirements in WDR Order No. R1-2006-0045, but the proposed monitoring program was never implemented. Significant new information is now available that may lead to a revision to the monitoring program. This Order provides additional time for the Permittee to review this new information and revise the program as necessary.

3. **Best Management Practices and Pollution Prevention**

   a. **Pollutant Minimization Plan.** Provision VI.C.3.a is included in this Order as required by section 2.4.5 of the SIP. The Regional Water Board includes standard provisions in all NPDES permits requiring development of a Pollutant Minimization Program when there is evidence that a toxic pollutant is present in the effluent at a concentration greater than an applicable effluent limitation.

4. **Construction, Operation, and Maintenance Specifications**

   a. Section 122.41(e) requires proper operation and maintenance of permitted wastewater systems and related facilities to achieve compliance with permit conditions. An up-to-date operation and maintenance manual, as required by Provision VI.C.4.b of this Order, is an integral part of a well-operated and maintained facility.

5. **Special Provisions for Municipal Facilities (POTWs Only)**

   a. **Wastewater Collection Systems (Special Provision VI.C.5.a)**

      i. **Statewide General WDRs for Sanitary Sewer Systems.** On May 2, 2006, the State Water Board adopted General Waste Discharge Requirements for Sanitary Sewer Systems, Water Quality Order No. 2006-0003-DWQ (General Order). The General Order requires public agencies that own or operate sanitary sewer systems with greater than 1 mile of pipes or sewer lines to enroll for coverage under the General Order. The General Order requires agencies to develop sanitary sewer management plans (SSMPs) and report all SSOs, among other requirements and prohibitions. The Permittee has enrolled under the General Order as required.

      On February 20, 2008, the State Water Board adopted Order No. WQ 2008-0002-EXEC Adopting Amended Monitoring and Reporting Requirements for Statewide General Waste Discharge Requirements for Sanitary Sewer Systems, to ensure adequate and timely notifications are made to the Regional Water Board and appropriate local, state, and federal authorities in case of sewage spills. Notification and reporting of SSOs is conducted in accordance with the requirements of Order Nos. 2006-0003-DWQ and any revisions thereto for operation of its wastewater collection system.

   b. **Pretreatment Program (Special Provision VI.C.5.b).** Section 402(b)(8) of the CWA requires that POTWs receiving pollutants from significant industrial sources subject to section 307(b) standards establish an industrial pretreatment program to ensure compliance with these standards. The implementing regulations at 403.8(a) state, "any POTW (or combination of POTWs operated by the same authority) with a total design flow greater than 5 million gallons per day (mgd) and receiving from industrial users pollutants which pass through or interfere with the operation of the POTW or are otherwise subject to pretreatment standards will be required to establish a POTW pretreatment program unless the NPDES State exercises its option to assume local responsibilities as provided in 403.10(e)." The Subregional System is subject to pretreatment standards as described in section 307(b) of the CWA and section 403.8(a).

   c. **Sludge Disposal and Handling Requirements (Special Provision VI.C.5.c).** The disposal or reuse of wastewater treatment screenings, sludges, or other solids removed from the liquid waste stream is regulated by 40 CFR Parts 257, 258, 501, and 503, and the State Water Board promulgated provisions of title 27 of the CCR. The Permittee has indicated that all screenings, sludges, and solids removed from the liquid waste stream are currently disposed of off-site at a municipal solid waste landfill in accordance with all applicable regulations.

d. **Statewide General WDRs for Discharge of Biosolids to Land (Special Provision VI.C.5.d).** This provision requires the Permittee to comply with the State's regulations relating to the discharge of biosolids to the land. The discharge of biosolids through land application is not regulated under this Order. The Permittee has obtained coverage under the State Water Board Order No. 2004-0012-DWQ, General Waste Discharge Requirements for the Discharge of Biosolids to Land as a Soil Amendment in Agricultural, Silvicultural, Horticultural, and Land Reclamation Activities (General Order). Coverage under the General Order, as opposed to coverage under this NPDES permit or individual WDRs, implements a consistent statewide approach to regulating this waste discharge.

e. **Operator Certification (Special Provision VI.C.5.e).** This provision requires the Subregional System to be operated by supervisors and operators who are certified as required by title 23, California Code of Regulations, section 3680.

f. **Adequate Capacity (Special Provision VI.C.5.f).** The goal of this provision is to ensure appropriate and timely planning by the Permittee to ensure adequate capacity for the protection of public health and water quality.

6. **Other Special Provisions**

a. **Capacity Increase Engineering Report (Special Provision VI.C.6.a).** The Permittee is required to shall submit an engineering report documenting that treatment and/or total reclamation capacity has been added. This report shall document that the Permittee exceeds the total reclamation capacity of 4,015 million gallons for Geysers recharge, and maintains the capability to irrigate at least 2,590 million gallons per year at 21.34 mgd average dry weather flow. The Executive Officer will inform the Permittee within 90 days after receipt of the report that the additional capacity is recognized by the Regional Water Board. This provision is newly established by this Order because the Permittee anticipates an increase in discharge volume during the term of the permit.

b. **Storm Water (Special Provision VI.C.6.b).** This provision acknowledges the Permittee's coverage under the State Water Board's Water Quality Order No. 97-03-DWQ, NPDES General Permit Number CAS000001, Waste Discharge Requirements for Discharges of Storm Water Associated with Industrial Activities Excluding Construction Activities.

VIII. PUBLIC PARTICIPATION

The California Regional Water Quality Control Board, North Coast Region (Regional Water Board) is considering the issuance of waste discharge requirements (WDRs) that will serve

as a National Pollutant Discharge Elimination System (NPDES) permit and a Master Reclamation Permit for the Santa Rosa Subregional Water Reclamation System. As a step in the WDR adoption process, the Regional Water Board staff has developed tentative WDRs. The Regional Water Board encourages public participation in the WDR adoption process.

A. Notification of Interested Parties

The Regional Water Board has notified the Permittee and interested agencies and persons of its intent to prescribe waste discharge requirements for the discharge and has provided them with an opportunity to submit their written comments and recommendations. Notification was provided through the following posting on the Regional Water Board's Internet site at: http://www.waterboards.ca.gov/northcoast/public_notices/public_hearings/npdes_permits_and_wdrs.shtml and through publication in the **Press Democrat** on **June 19, 2013.**

B. Written Comments

The staff determinations are tentative. Interested persons are invited to submit written comments concerning these tentative WDRs. Comments must be submitted either in person or by mail to the Executive Office at the Regional Water Board at the address above on the cover page of this Order.

To be fully responded to by staff and considered by the Regional Water Board, written comments must be received at the Regional Water Board offices by 5:00 p.m. on **July 22, 2013.**

C. Public Hearing

The Regional Water Board will hold a public hearing on the tentative WDRs during its regular Board meeting on the following date and time and at the following location:

Date: **November 20-21, 2013**

Time: **8:30 a.m**. or as announced in the Regional Water Board's agenda

Location: **Regional Water Board Hearing Room**
5550 Skylane Boulevard, Suite A
Santa Rosa, CA 95403

Interested persons are invited to attend. At the public hearing, the Regional Water Board will hear testimony, if any, pertinent to the discharge, WDRs, and permit. Oral testimony will be heard; however, for accuracy of the record, important testimony should be in writing.

Please be aware that dates and venues may change. Our Web address is http://www.waterboards.ca.gov/northcoast where you can access the current agenda for changes in dates and locations.

D. Waste Discharge Requirements Petitions

Any person affected by this action of the Regional Water Board may petition the State Water Resources Control Board (State Water Board) to review the action in accordance with Water Code section 13320 and title 23, section 2050 of the CCR. The petition must be received by the State Water Board within 30 days of the date of this Order. Copies of the law and regulations applicable to filing petitions will be provided upon request. In addition to filing a petition with the State Water Board, any person affected by this Order may request the Regional Water Board to reconsider the Order. To be timely, such request must be made within 30 days of the date of this Order. Note that even if reconsideration by the Regional water Board is sought, filing a petition with the State Water Board within the 30-day period is necessary to preserve the petitioner's legal rights. If the Permittee chooses to request reconsideration of this Order or file a petition with the State Water Board, the Permittee must comply with the Order while the request for reconsideration and/or petition is being considered. The petition must be submitted within 30 days of the Regional Water Board's action to the following address:

State Water Resources Control Board
Office of Chief Counsel
P.O. Box 100, 1001 I Street
Sacramento, CA 95812-0100

E. Information and Copying

The Report of Waste Discharge (RWD), related documents, tentative effluent limitations and special provisions, comments received, and other information are on file and may be inspected at the address above at any time between 8:30 a.m. and 4:45 p.m., Monday through Friday. Copying of documents may be arranged through the Regional Water Board by calling (707) 576-2220.

F. Register of Interested Persons

Any person interested in being placed on the mailing list for information regarding the WDRs and NPDES permit should contact the Regional Water Board, reference this facility, and provide a name, address, and phone number.

G. Additional Information

Requests for additional information or questions regarding this order should be directed to Charles Reed at Charles.Reed@waterboards.ca.gov or (707) 576-2752.

.

Table F-13. Summary of RPA for Priority Pollutants - Discharge Points 006A, 006B, 012A(1), and 015

Step 1			Step 2	Step 3			Step 5					Final Result	
CTR No.	*Constituent name*	*C (µg/L)* *Lowest (most stringent) Criteria (Enter "No Criteria" for no criteria)*	*Effluent Data Available (Y/N)?*	*Are all data points non-detects (Y/N)?*	*If all data points ND Enter the min detection limit (MDL) (ug/L)*	*Enter the pollutant effluent detected max conc (ug/L)*	*B Available (Y/N)?*	*Are all B data points non-detects (Y/N)?*	*If all data points ND Enter the min detection limit (MDL) (ug/L)*	*Enter the pollutant B detected max conc (ug/L)*	*If all B is ND, is MDL >C?*	*RPA Result*	*Reason*
1	Antimony	6	Y	N		0.46	Y	Y	0.12		N	**No**	Ud;MEC<C & B is ND
2	Arsenic	50	Y	N		1.9	Y	N		1.1		**No**	MEC<C & B<C
3	Beryllium	4	Y	N		0.08	Y	N		0.02		**No**	MEC<C & B<C
4	Cadmium	1.8	Y	N		0.051	Y	Y	0.016		N	**No**	Ud;MEC<C & B is ND
5a	Chromium (III)	150	N				N					**Ud**	no effluent data & no B
5b	Chromium (VI)	11	Y	N		0.84	Y	N		3		**No**	MEC<C & B<C
6	Copper	6.7	Y	N		4.3	Y	N		3.6		**No**	MEC<C & B<C
7	Lead	1.9	Y	N		0.31	Y	N		0.47		**No**	MEC<C & B<C
8	Mercury	0.050	Y	N		0.00276	Y	N		0.00609		**No**	MEC<C & B<C
9	Nickel	37	Y	N		4	Y	N		5.2		**No**	MEC<C & B<C
10	Selenium	5.0	Y	N		0.8	Y	N		0.21		**No**	MEC<C & B<C
11	Silver	2.1	Y	N		0.5	Y	Y	0.039		N	**No**	Ud;MEC<C & B is ND
12	Thallium	1.7	Y	N		0.14	Y	Y	0.11		N	**No**	Ud;MEC<C & B is ND
13	Zinc	86	Y	N		41.9	Y	N		5.9		**No**	MEC<C & B<C
14	Cyanide	5.2	Y	N		2.32	Y	Y	1		N	**No**	Ud;MEC<C & B is ND
15	Asbestos	7.0	N				N					**Ud**	no effluent data & no B
16	2,3,7,8 TCDD	1.3E-08	Y	Y	3.6E-07		Y	Y	0.000000355		Y	**No**	UD; effluent data and B are ND
17	Acrolein	320	Y	Y	0.62		Y	Y	0.95		N	**No**	Ud;MEC<C & B is ND
18	Acrylonitrile	0.06	Y	Y	0.22		Y	Y	0.22		Y	**No**	UD; effluent data and B are ND
19	Benzene	1.0	Y	Y	0.07		Y	Y	0.07		N	**No**	Ud;MEC<C & B is ND
20	Bromoform	4.3	Y	Y	0.14		Y	Y	0.14		N	**No**	Ud;MEC<C & B is ND
21	Carbon Tetrachloride	0.25	Y	Y	0.05		Y	Y	0.05		N	**No**	Ud;MEC<C & B is ND
22	Chlorobenzene	70	Y	Y	0.07		Y	Y	0.07		N	**No**	Ud;MEC<C & B is ND
23	Chlorodibromomethane	0.40	Y	N		0.6	Y	Y	0.05		N	**Yes**	MEC>C

Step 1			Step 2	Step 3			Step 5					Final Result	
CTR No.	*Constituent name*	*C (µg/L)* *Lowest (most stringent) Criteria (Enter "No Criteria" for no criteria)*	*Effluent Data Available (Y/N)?*	*Are all data points non-detects (Y/N)?*	*If all data points ND Enter the min detection limit (MDL) (ug/L)*	*Enter the pollutant effluent detected max conc (ug/L)*	*B Available (Y/N)?*	*Are all B data points non-detects (Y/N)?*	*If all data points ND Enter the min detection limit (MDL) (ug/L)*	*Enter the pollutant B detected max conc (ug/L)*	*If all B is ND, is MDL >C?*	*RPA Result*	*Reason*
24	Chloroethane	No Criteria	Y	Y	0.17		Y	Y	0.17		N	**Uo**	No Criteria
25	2-Chloroethylvinyl ether	No Criteria	Y	Y	0.24		Y	Y	0.24		N	**Uo**	No Criteria
26	Chloroform	No Criteria	Y	N		10.8	Y	Y	0.07		N	**Uo**	No Criteria
27	Dichlorobromomethane	0.56	Y	N		2.46	Y	Y	0.08		N	**Yes**	MEC>C
28	1,1-Dichloroethane	5.0	Y	Y	0.06		Y	Y	0.06		N	**No**	Ud;MEC<C & B is ND
29	1,2-Dichloroethane	0.38	Y	Y	0.07		Y	Y	0.07		N	**No**	Ud;MEC<C & B is ND
30	1,1-Dichloroethylene	0.057	Y	Y	0.08		Y	Y	0.08		Y	**No**	UD; effluent data and B are ND
31	1,2-Dichloropropane	0.52	Y	Y	0.05		Y	Y	0.05		N	**No**	Ud;MEC<C & B is ND
32	1,3-Dichloropropylene	0.50	Y	Y	0.05		Y	Y	0.05		N	**No**	Ud;MEC<C & B is ND
33	Ethylbenzene	300	Y	Y	0.06		Y	Y	0.06		N	**No**	Ud;MEC<C & B is ND
34	Methyl Bromide	48	Y	Y	0.17		Y	Y	0.17		N	**No**	Ud;MEC<C & B is ND
35	Methyl Chloride	No Criteria	Y	Y	0.09		Y	Y	0.09		N	**Uo**	No Criteria
36	Methylene Chloride	4.7	Y	N		0.27	Y	Y	0.11		N	**No**	Ud;MEC<C & B is ND
37	1,1,2,2-Tetrachloroethane	0.17	Y	Y	0.08		Y	Y	0.08		N	**No**	Ud;MEC<C & B is ND
38	Tetrachloroethylene	0.80	Y	Y	0.07		Y	Y	0.07		N	**No**	Ud;MEC<C & B is ND
39	Toluene	150	Y	N		0.23	Y	N		0.17		**No**	MEC<C & B<C
40	1,2-Trans-Dichloroethylene	10	Y	Y	0.1		Y	Y	0.1		N	**No**	Ud;MEC<C & B is ND
41	1,1,1-Trichloroethane	200	Y	Y	0.08		Y	Y	0.08		N	**No**	Ud;MEC<C & B is ND
42	1,1,2-Trichloroethane	0.60	Y	Y	0.04		Y	Y	0.04		N	**No**	Ud;MEC<C & B is ND
43	Trichloroethylene	2.7	Y	Y	0.06		Y	Y	0.06		N	**No**	Ud;MEC<C & B is ND
44	Vinyl Chloride	0.50	Y	Y	0.09		Y	Y	0.09		N	**No**	Ud;MEC<C & B is ND
45	2-Chlorophenol	120	Y	Y	0.18		Y	Y	0.18		N	**No**	Ud;MEC<C & B is ND
46	2,4-Dichlorophenol	93	Y	Y	0.16		Y	Y	0.16		N	**No**	Ud;MEC<C & B is ND
47	2,4-Dimethylphenol	540	Y	Y	0.23		Y	Y	0.23		N	**No**	Ud;MEC<C & B is ND
48	2-Methyl- 4,6-Dinitrophenol	13	Y	Y	0.74		Y	Y	0.74		N	**No**	Ud;MEC<C & B is ND
49	2,4-Dinitrophenol	70	Y	Y	0.72		Y	Y	0.72		N	**No**	Ud;MEC<C & B is ND
50	2-Nitrophenol	No Criteria	Y	Y	0.17		Y	Y	0.17		N	**Uo**	No Criteria

Step 1			Step 2	Step 3			Step 5					Final Result	
CTR No.	*Constituent name*	*C (µg/L)* *Lowest (most stringent) Criteria (Enter "No Criteria" for no criteria)*	*Effluent Data Available (Y/N)?*	*Are all data points non-detects (Y/N)?*	*If all data points ND Enter the min detection limit (MDL) (ug/L)*	*Enter the pollutant effluent detected max conc (ug/L)*	*B Available (Y/N)?*	*Are all B data points non-detects (Y/N)?*	*If all data points ND Enter the min detection limit (MDL) (ug/L)*	*Enter the pollutant B detected max conc (ug/L)*	*If all B is ND, is MDL >C?*	*RPA Result*	*Reason*
51	4-Nitrophenol	No Criteria	Y	Y	1.01		Y	Y	1.01		N	**Uo**	No Criteria
52	3-Methyl 4-Chlorophenol	No Criteria	Y	Y	0.13		Y	Y	0.13		N	**Uo**	No Criteria
53	Pentachlorophenol	0.28	Y	Y	1.06		Y	Y	1.06		Y	**No**	UD; effluent data and B are ND
54	Phenol	21,000	Y	Y	0.18		Y	Y	0.18		N	**No**	Ud;MEC<C & B is ND
55	2,4,6-Trichlorophenol	2.1	Y	N		0.16	Y	Y	0.13		N	**No**	Ud;MEC<C & B is ND
56	Acenaphthene	1,200	Y	Y	0.17		Y	Y	0.17		N	**No**	Ud;MEC<C & B is ND
57	Acenaphthylene	No Criteria	Y	Y	0.27		Y	Y	0.27		N	**Uo**	No Criteria
58	Anthracene	9,600	Y	Y	0.23		Y	Y	0.23		N	**No**	Ud;MEC<C & B is ND
59	Benzidine	0.00012	Y	Y	1		Y	Y	1		Y	**No**	UD; effluent data and B are ND
60	Benzo(a)Anthracene	0.0044	Y	Y	0.32		Y	Y	0.32		Y	**No**	UD; effluent data and B are ND
61	Benzo(a)Pyrene	0.0044	Y	Y	0.38		Y	Y	0.38		Y	**No**	UD; effluent data and B are ND
62	Benzo(b)Fluoranthene	0.0044	Y	Y	0.27		Y	Y	0.27		Y	**No**	UD; effluent data and B are ND
63	Benzo(ghi)Perylene	No Criteria	Y	Y	0.25		Y	Y	0.25		N	**Uo**	No Criteria
64	Benzo(k)Fluoranthene	0.0044	Y	Y	0.25		Y	Y	0.25		Y	**No**	UD; effluent data and B are ND
65	Bis(2-Chloroethoxy)Methane	No Criteria	Y	Y	0.2		Y	Y	0.2		N	**Uo**	No Criteria
66	Bis(2-Chloroethyl)Ether	0.031	Y	Y	0.16		Y	Y	0.16		Y	**No**	UD; effluent data and B are ND
67	Bis(2-Chloroisopropyl)Ether	1,400	Y	Y	0.16		Y	Y	0.16		N	**No**	Ud;MEC<C & B is ND
68	Bis(2-Ethylhexyl)Phthalate	1.8	Y	N		2	Y	N		1.7		**No**	BPJ
69	4-Bromophenyl Phenyl Ether	No Criteria	Y	Y	0.23		Y	Y	0.23		N	**Uo**	No Criteria
70	Butylbenzyl Phthalate	3,000	Y	Y	0.54		Y	Y	0.54		N	**No**	Ud;MEC<C & B is ND
71	2-Chloronaphthalene	1,700	Y	Y	0.14		Y	Y	0.14		N	**No**	Ud;MEC<C & B is ND
72	4-Chlorophenyl Phenyl Ether	No Criteria	Y	Y	0.16		Y	Y	0.16		N	**Uo**	No Criteria
73	Chrysene	0.0044	Y	Y	0.19		Y	Y	0.19		Y	**No**	UD; effluent data and B are ND

Step 1			Step 2	Step 3			Step 5					Final Result	
CTR No.	*Constituent name*	*C (µg/L)* *Lowest (most stringent) Criteria (Enter "No Criteria" for no criteria)*	*Effluent Data Available (Y/N)?*	*Are all data points non-detects (Y/N)?*	*If all data points ND Enter the min detection limit (MDL) (ug/L)*	*Enter the pollutant effluent detected max conc (ug/L)*	*B Available (Y/N)?*	*Are all B data points non-detects (Y/N)?*	*If all data points ND Enter the min detection limit (MDL) (ug/L)*	*Enter the pollutant B detected max conc (ug/L)*	*If all B is ND, is MDL >C?*	*RPA Result*	*Reason*
74	Dibenzo(a,h)Anthracene	0.0044	Y	Y	0.16		Y	Y	0.16		Y	**No**	UD; effluent data and B are ND
75	1,2-Dichlorobenzene	600	Y	Y	0.06		Y	Y	0.06		N	**No**	Ud;MEC<C & B is ND
76	1,3-Dichlorobenzene	400	Y	Y	0.05		Y	N		0.75		**No**	MEC<C & B<C
77	1,4-Dichlorobenzene	5.0	Y	Y	0.17		Y	Y	0.17		N	**No**	Ud;MEC<C & B is ND
78	3,3 Dichlorobenzidine	0.040	Y	Y	0.31		Y	Y	0.31		Y	**No**	UD; effluent data and B are ND
79	Diethyl Phthalate	23,000	Y	Y	0.33		Y	Y	0.33		N	**No**	Ud;MEC<C & B is ND
80	Dimethyl Phthalate	313,000	Y	Y	0.29		Y	Y	0.29		N	**No**	Ud;MEC<C & B is ND
81	Di-n-Butyl Phthalate	2,700	Y	N		0.88	Y	N		0.85		**No**	MEC<C & B<C
82	2,4-Dinitrotoluene	0.110	Y	Y	0.28		Y	Y	0.28		Y	**No**	UD; effluent data and B are ND
83	2,6-Dinitrotoluene	No Criteria	Y	Y	0.32		Y	Y	0.32		N	**Uo**	No Criteria
84	Di-n-Octyl Phthalate	No Criteria	Y	Y	0.52		Y	Y	0.52		N	**Uo**	No Criteria
85	1,2-Diphenylhydrazine	0.040	Y	Y	0.25		Y	Y	0.25		Y	**No**	UD; effluent data and B are ND
86	Fluoranthene	300	Y	Y	0.26		Y	Y	0.26		N	**No**	Ud;MEC<C & B is ND
87	Fluorene	1,300	Y	Y	0.16		Y	Y	0.16		N	**No**	Ud;MEC<C & B is ND
88	Hexachlorobenzene	0.00075	Y	Y	0.27		Y	Y	0.27		Y	**No**	UD; effluent data and B are ND
89	Hexachlorobutadiene	0.44	Y	Y	0.11		Y	Y	0.11		N	**No**	Ud;MEC<C & B is ND
90	Hexachlorocyclopentadiene	50	Y	Y	0.21		Y	Y	0.21		N	**No**	Ud;MEC<C & B is ND
91	Hexachloroethane	1.9	Y	Y	0.24		Y	Y	0.24		N	**No**	Ud;MEC<C & B is ND
92	Indeno(1,2,3-cd)Pyrene	0.0044	Y	Y	0.29		Y	Y	0.29		Y	**No**	UD; effluent data and B are ND
93	Isophorone	8.4	Y	Y	0.26		Y	Y	0.26		N	**No**	Ud;MEC<C & B is ND
94	Naphthalene	No Criteria	Y	Y	0.17		Y	Y	0.17		N	**Uo**	No Criteria
95	Nitrobenzene	17	Y	Y	0.21		Y	Y	0.21		N	**No**	Ud;MEC<C & B is ND
96	N-Nitrosodimethylamine	0.00069	Y	Y	0.23		Y	Y	0.23		Y	**No**	UD; effluent data and B are ND
97	N-Nitrosodi-n-Propylamine	0.0050	Y	Y	0.22		Y	Y	0.22		Y	**No**	UD; effluent data and B

Step 1			Step 2	Step 3			Step 5					Final Result	
CTR No.	*Constituent name*	*C (µg/L)* *Lowest (most stringent) Criteria (Enter "No Criteria" for no criteria)*	*Effluent Data Available (Y/N)?*	*Are all data points non-detects (Y/N)?*	*If all data points ND Enter the min detection limit (MDL) (ug/L)*	*Enter the pollutant effluent detected max conc (ug/L)*	*B Available (Y/N)?*	*Are all B data points non-detects (Y/N)?*	*If all data points ND Enter the min detection limit (MDL) (ug/L)*	*Enter the pollutant B detected max conc (ug/L)*	*If all B is ND, is MDL >C?*	*RPA Result*	*Reason*
													are ND
98	N-Nitrosodiphenylamine	5.0	Y	Y	0.24		Y	Y	0.24		N	**No**	Ud;MEC<C & B is ND
99	Phenanthrene	No Criteria	Y	Y	0.16		Y	Y	0.16		N	**Uo**	No Criteria
100	Pyrene	960	Y	Y	0.25		Y	Y	0.25		N	**No**	Ud;MEC<C & B is ND
101	1,2,4-Trichlorobenzene	5.0	Y	Y	0.14		Y	Y	0.14		N	**No**	Ud;MEC<C & B is ND
102	Aldrin	0.00013	Y	Y	0.0027		Y	Y	0.0027		Y	**No**	UD; effluent data and B are ND
103	alpha-BHC	0.0039	Y	Y	0.002		Y	Y	0.006		Y	**No**	Ud;MEC<C & B is ND
104	beta-BHC	0.014	Y	Y	0.002		Y	Y	0.004		N	**No**	Ud;MEC<C & B is ND
105	gamma-BHC	0.019	Y	Y	0.002		Y	Y	0.0024		N	**No**	Ud;MEC<C & B is ND
106	delta-BHC	No Criteria	Y	Y	0.002		Y	Y	0.0024		N	**Uo**	No Criteria
107	Chlordane	0.00057	Y	Y	0.0023		Y	Y	0.0023		Y	**No**	UD; effluent data and B are ND
108	4,4'-DDT	0.00059	Y	Y	0.003		Y	Y	0.0046		Y	**No**	UD; effluent data and B are ND
109	4,4'-DDE	0.00059	Y	Y	0.0025		Y	Y	0.0025		Y	**No**	UD; effluent data and B are ND
110	4,4'-DDD	0.00083	Y	Y	0.0022		Y	Y	0.0022		Y	**No**	UD; effluent data and B are ND
111	Dieldrin	0.00014	Y	Y	0.0022		Y	Y	0.0022		Y	**No**	UD; effluent data and B are ND
112	alpha-Endosulfan	0.056	Y	Y	0.0027		Y	Y	0.0027		N	**No**	Ud;MEC<C & B is ND
113	beta-Endolsulfan	0.056	Y	Y	0.003		Y	Y	0.0041		N	**No**	Ud;MEC<C & B is ND
114	Endosulfan Sulfate	110	Y	Y	0.0028		Y	Y	0.0028		N	**No**	Ud;MEC<C & B is ND
115	Endrin	0.036	Y	Y	0.0021		Y	Y	0.0021		N	**No**	Ud;MEC<C & B is ND
116	Endrin Aldehyde	0.76	Y	Y	0.0019		Y	Y	0.0019		N	**No**	Ud;MEC<C & B is ND
117	Heptachlor	0.00021	Y	Y	0.0024		Y	Y	0.0024		Y	**No**	UD; effluent data and B are ND
118	Heptachlor Epoxide	0.00010	Y	Y	0.0026		Y	Y	0.0026		Y	**No**	UD; effluent data and B are ND
119 - 125	PCBs sum	0.00017	Y	Y	0.34		Y	Y	1.082		Y	**No**	UD; effluent data and B are ND

Step 1			**Step 2**	**Step 3**			**Step 5**					**Final Result**	
CTR No.	*Constituent name*	*C (µg/L)*	*Effluent Data Available (Y/N)?*	*Are all data points non-detects (Y/N)?*	*If all data points ND Enter the min detection limit (MDL) (ug/L)*	*Enter the pollutant effluent detected max conc (ug/L)*	*B Available (Y/N)?*	*Are all B data points non-detects (Y/N)?*	*If all data points ND Enter the min detection limit (MDL) (ug/L)*	*Enter the pollutant B detected max conc (ug/L)*	*If all B is ND, is MDL >C?*	*RPA Result*	*Reason*
		Lowest (most stringent) Criteria (Enter "No Criteria" for no criteria)											
126	Toxaphene	0.00020	Y	Y	0.21		Y	Y	0.21		Y	**No**	UD; effluent data and B are ND

Table F-14. Summary of RPA for Priority Pollutants - Discharge Points 012A(2), 012B

Step 1			Step 2	Step 3			Step 5					Final Result	
CTR No.	*Constituent name*	*C (µg/L) Lowest (most stringent) Criteria (Enter "No Criteria" for no criteria)*	*Effluent Data Available (Y/N)?*	*Are all data points non-detects (Y/N)?*	*If all data points ND Enter the min detection limit (MDL) (ug/L)*	*Enter the pollutant effluent detected max conc (ug/L)*	*B Available (Y/N)?*	*Are all B data points non-detects (Y/N)?*	*If all data points ND Enter the min detection limit (MDL) (ug/L)*	*Enter the pollutant B detected max conc (ug/L)*	*If all B is ND, is MDL >C?*	*RPA Result*	*Reason*
1	Antimony	6	Y	N		0.28	Y	Y	0.12		N	**No**	Ud;MEC<C & B is ND
2	Arsenic	50	Y	N		1.9	Y	N		1.1		**No**	MEC<C & B<C
3	Beryllium	4	Y	N		0.018	Y	N		0.02		**No**	MEC<C & B<C
4	Cadmium	1.8	Y	N		0.025	Y	Y	0.016		N	**No**	Ud;MEC<C & B is ND
5a	Chromium (III)	150	N				N					**Ud**	no effluent data & no B
5b	Chromium (VI)	11	Y	N		0.75	Y	N		3		**No**	MEC<C & B<C
6	Copper	6.7	Y	N		2.9	Y	N		3.6		**No**	MEC<C & B<C
7	Lead	1.9	Y	N		0.27	Y	N		0.47		**No**	MEC<C & B<C
8	Mercury	0.050	Y	N		0.00164	Y	N		0.00609		**No**	MEC<C & B<C
9	Nickel	37	Y	N		6.4	Y	N		5.2		**No**	MEC<C & B<C
10	Selenium	5.0	Y	N		0.38	Y	N		0.21		**No**	MEC<C & B<C
11	Silver	2.1	Y	Y	0.039		Y	Y	0.039		N	**No**	Ud;MEC<C & B is ND
12	Thallium	1.7	Y	Y	0.11		Y	Y	0.11		N	**No**	Ud;MEC<C & B is ND
13	Zinc	86	Y	N		15.6	Y	N		5.9		**No**	MEC<C & B<C
14	Cyanide	5.2	Y	Y	1		Y	Y	1		N	**No**	Ud;MEC<C & B is ND
15	Asbestos	7.0	N				N					**Ud**	no effluent data & no B
16	2,3,7,8 TCDD	1.3E-08	Y	Y	3.6E-07		Y	Y	0.000000355		Y	**No**	UD; effluent data and B are ND
17	Acrolein	320	Y	Y	0.95		Y	Y	0.95		N	**No**	Ud;MEC<C & B is ND
18	Acrylonitrile	0.06	Y	Y	0.22		Y	Y	0.22		Y	**No**	UD; effluent data and B are ND
19	Benzene	1.0	Y	Y	0.07		Y	Y	0.07		N	**No**	Ud;MEC<C & B is

Step 1			Step 2	Step 3			Step 5					Final Result	
CTR No.	*Constituent name*	*C (µg/L)* *Lowest (most stringent) Criteria (Enter "No Criteria" for no criteria)*	*Effluent Data Available (Y/N)?*	*Are all data points non-detects (Y/N)?*	*If all data points ND Enter the min detection limit (MDL) (ug/L)*	*Enter the pollutant effluent detected max conc (ug/L)*	*B Available (Y/N)?*	*Are all B data points non-detects (Y/N)?*	*If all data points ND Enter the min detection limit (MDL) (ug/L)*	*Enter the pollutant B detected max conc (ug/L)*	*If all B is ND, is MDL >C?*	*RPA Result*	*Reason*
													ND
20	Bromoform	4.3	Y	Y	0.14		Y	Y	0.14		N	**No**	Ud;MEC< C & B is ND
21	Carbon Tetrachloride	0.25	Y	Y	0.05		Y	Y	0.05		N	**No**	Ud;MEC< C & B is ND
22	Chlorobenzene	70	Y	Y	0.07		Y	Y	0.07		N	**No**	Ud;MEC< C & B is ND
23	Chlorodibromomethane	0.40	Y	Y	0.05		Y	Y	0.05		N	**No**	Ud;MEC< C & B is ND
24	Chloroethane	No Criteria	Y	Y	0.17		Y	Y	0.17		N	**Uo**	No Criteria
25	2-Chloroethylvinyl ether	No Criteria	Y	Y	0.24		Y	Y	0.24		N	**Uo**	No Criteria
26	Chloroform	No Criteria	Y	N		0.23	Y	Y	0.07		N	**Uo**	No Criteria
27	Dichlorobromomethane	0.56	Y	N		0.26	Y	Y	0.08		N	**No**	Ud;MEC< C & B is ND
28	1,1-Dichloroethane	5.0	Y	Y	0.06		Y	Y	0.06		N	**No**	Ud;MEC< C & B is ND
29	1,2-Dichloroethane	0.38	Y	Y	0.07		Y	Y	0.07		N	**No**	Ud;MEC< C & B is ND
30	1,1-Dichloroethylene	0.057	Y	Y	0.08		Y	Y	0.08		Y	**No**	UD; effluent data and B are ND
31	1,2-Dichloropropane	0.52	Y	Y	0.05		Y	Y	0.05		N	**No**	Ud;MEC< C & B is ND
32	1,3-Dichloropropylene	0.50	Y	Y	0.05		Y	Y	0.05		N	**No**	Ud;MEC< C & B is ND
33	Ethylbenzene	300	Y	Y	0.06		Y	Y	0.06		N	**No**	Ud;MEC< C & B is ND
34	Methyl Bromide	48	Y	Y	0.17		Y	Y	0.17		N	**No**	Ud;MEC< C & B is ND
35	Methyl Chloride	No Criteria	Y	Y	0.09		Y	Y	0.09		N	**Uo**	No Criteria
36	Methylene Chloride	4.7	Y	Y	0.11		Y	Y	0.11		N	**No**	Ud;MEC< C & B is ND
37	1,1,2,2-Tetrachloroethane	0.17	Y	Y	0.08		Y	Y	0.08		N	**No**	Ud;MEC< C & B is ND
38	Tetrachloroethylene	0.80	Y	Y	0.07		Y	Y	0.07		N	**No**	Ud;MEC< C & B is ND
39	Toluene	150	Y	N		0.15	Y	N		0.17		**No**	MEC<C &

Step 1			Step 2	Step 3			Step 5					Final Result	
CTR No.	*Constituent name*	*C (µg/L) Lowest (most stringent) Criteria (Enter "No Criteria" for no criteria)*	*Effluent Data Available (Y/N)?*	*Are all data points non-detects (Y/N)?*	*If all data points ND Enter the min detection limit (MDL) (ug/L)*	*Enter the pollutant effluent detected max conc (ug/L)*	*B Available (Y/N)?*	*Are all B data points non-detects (Y/N)?*	*If all data points ND Enter the min detection limit (MDL) (ug/L)*	*Enter the pollutant B detected max conc (ug/L)*	*If all B is ND, is MDL >C?*	*RPA Result*	*Reason*
													B<C
40	1,2-Trans-Dichloroethylene	10	Y	Y	0.1		Y	Y	0.1		N	**No**	Ud;MEC< C & B is ND
41	1,1,1-Trichloroethane	200	Y	Y	0.08		Y	Y	0.08		N	**No**	Ud;MEC< C & B is ND
42	1,1,2-Trichloroethane	0.60	Y	Y	0.04		Y	Y	0.04		N	**No**	Ud;MEC< C & B is ND
43	Trichloroethylene	2.7	Y	Y	0.06		Y	Y	0.06		N	**No**	Ud;MEC< C & B is ND
44	Vinyl Chloride	0.50	Y	Y	0.09		Y	Y	0.09		N	**No**	Ud;MEC< C & B is ND
45	2-Chlorophenol	120	Y	Y	0.18		Y	Y	0.18		N	**No**	Ud;MEC< C & B is ND
46	2,4-Dichlorophenol	93	Y	N		0.17	Y	Y	0.16		N	**No**	Ud;MEC< C & B is ND
47	2,4-Dimethylphenol	540	Y	Y	0.23		Y	Y	0.23		N	**No**	Ud;MEC< C & B is ND
48	2-Methyl- 4,6-Dinitrophenol	13	Y	Y	0.74		Y	Y	0.74		N	**No**	Ud;MEC< C & B is ND
49	2,4-Dinitrophenol	70	Y	Y	0.72		Y	Y	0.72		N	**No**	Ud;MEC< C & B is ND
50	2-Nitrophenol	No Criteria	Y	Y	0.17		Y	Y	0.17		N	**Uo**	No Criteria
51	4-Nitrophenol	No Criteria	Y	Y	1.01		Y	Y	1.01		N	**Uo**	No Criteria
52	3-Methyl 4-Chlorophenol	No Criteria	Y	Y	0.13		Y	Y	0.13		N	**Uo**	No Criteria
53	Pentachlorophenol	0.28	Y	Y	1.06		Y	Y	1.06		Y	**No**	UD; effluent data and B are ND
54	Phenol	21,000	Y	Y	0.18		Y	Y	0.18		N	**No**	Ud;MEC< C & B is ND
55	2,4,6-Trichlorophenol	2.1	Y	Y	0.13		Y	Y	0.13		N	**No**	Ud;MEC< C & B is ND
56	Acenaphthene	1,200	Y	Y	0.17		Y	Y	0.17		N	**No**	Ud;MEC< C & B is ND
57	Acenaphthylene	No Criteria	Y	Y	0.27		Y	Y	0.27		N	**Uo**	No Criteria
58	Anthracene	9,600	Y	Y	0.23		Y	Y	0.23		N	**No**	Ud;MEC< C & B is ND
59	Benzidine	0.00012	Y	Y	1		Y	Y	1		Y	**No**	UD;

Step 1			Step 2	Step 3			Step 5					Final Result	
CTR No.	*Constituent name*	*C (µg/L) Lowest (most stringent) Criteria (Enter "No Criteria" for no criteria)*	*Effluent Data Available (Y/N)?*	*Are all data points non-detects (Y/N)?*	*If all data points ND Enter the min detection limit (MDL) (ug/L)*	*Enter the pollutant effluent detected max conc (ug/L)*	*B Available (Y/N)?*	*Are all B data points non-detects (Y/N)?*	*If all data points ND Enter the min detection limit (MDL) (ug/L)*	*Enter the pollutant B detected max conc (ug/L)*	*If all B is ND, is MDL >C?*	*RPA Result*	*Reason*
													effluent data and B are ND
60	Benzo(a)Anthracene	0.0044	Y	Y	0.32		Y	Y	0.32		Y	**No**	UD; effluent data and B are ND
61	Benzo(a)Pyrene	0.0044	Y	Y	0.38		Y	Y	0.38		Y	**No**	UD; effluent data and B are ND
62	Benzo(b)Fluoranthene	0.0044	Y	Y	0.27		Y	Y	0.27		Y	**No**	UD; effluent data and B are ND
63	Benzo(ghi)Perylene	No Criteria	Y	Y	0.25		Y	Y	0.25		N	**Uo**	No Criteria
64	Benzo(k)Fluoranthene	0.0044	Y	Y	0.25		Y	Y	0.25		Y	**No**	UD; effluent data and B are ND
65	Bis(2-Chloroethoxy)Methane	No Criteria	Y	Y	0.2		Y	Y	0.2		N	**Uo**	No Criteria
66	Bis(2-Chloroethyl)Ether	0.031	Y	Y	0.16		Y	Y	0.16		Y	**No**	UD; effluent data and B are ND
67	Bis(2-Chloroisopropyl)Ether	1,400	Y	Y	0.16		Y	Y	0.16		N	**No**	Ud;MEC< C & B is ND
68	Bis(2-Ethylhexyl)Phthalate	1.8	Y	N		2.28	Y	N		1.7		**No**	BPJ
69	4-Bromophenyl Phenyl Ether	No Criteria	Y	Y	0.23		Y	Y	0.23		N	**Uo**	No Criteria
70	Butylbenzyl Phthalate	3,000	Y	N		1.49	Y	Y	0.54		N	**No**	Ud;MEC< C & B is ND
71	2-Chloronaphthalene	1,700	Y	Y	0.14		Y	Y	0.14		N	**No**	Ud;MEC< C & B is ND
72	4-Chlorophenyl Phenyl Ether	No Criteria	Y	Y	0.16		Y	Y	0.16		N	**Uo**	No Criteria
73	Chrysene	0.0044	Y	Y	0.19		Y	Y	0.19		Y	**No**	UD; effluent data and B are ND
74	Dibenzo(a,h)Anthracene	0.0044	Y	Y	0.16		Y	Y	0.16		Y	**No**	UD; effluent data and B are ND
75	1,2-Dichlorobenzene	600	Y	Y	0.06		Y	Y	0.06		N	**No**	Ud;MEC< C & B is ND
76	1,3-Dichlorobenzene	400	Y	N		0.64	Y	N		0.75		**No**	MEC<C & B<C
77	1,4-Dichlorobenzene	5.0	Y	Y	0.17		Y	Y	0.17		N	**No**	Ud;MEC<

Step 1			Step 2	Step 3			Step 5					Final Result	
CTR No.	*Constituent name*	*C (µg/L) Lowest (most stringent) Criteria (Enter "No Criteria" for no criteria)*	*Effluent Data Available (Y/N)?*	*Are all data points non-detects (Y/N)?*	*If all data points ND Enter the min detection limit (MDL) (ug/L)*	*Enter the pollutant effluent detected max conc (ug/L)*	*B Available (Y/N)?*	*Are all B data points non-detects (Y/N)?*	*If all data points ND Enter the min detection limit (MDL) (ug/L)*	*Enter the pollutant B detected max conc (ug/L)*	*If all B is ND, is MDL >C?*	*RPA Result*	*Reason*
													C & B is ND
78	3,3 Dichlorobenzidine	0.040	Y	Y	0.31		Y	Y	0.31		Y	**No**	UD; effluent data and B are ND
79	Diethyl Phthalate	23,000	Y	Y	0.33		Y	Y	0.33		N	**No**	Ud;MEC< C & B is ND
80	Dimethyl Phthalate	313,000	Y	Y	0.29		Y	Y	0.29		N	**No**	Ud;MEC< C & B is ND
81	Di-n-Butyl Phthalate	2,700	Y	N		0.93	Y	N		0.85		**No**	MEC<C & B<C
82	2,4-Dinitrotoluene	0.110	Y	Y	0.28		Y	Y	0.28		Y	**No**	UD; effluent data and B are ND
83	2,6-Dinitrotoluene	No Criteria	Y	Y	0.32		Y	Y	0.32		N	**Uo**	No Criteria
84	Di-n-Octyl Phthalate	No Criteria	Y	Y	0.52		Y	Y	0.52		N	**Uo**	No Criteria
85	1,2-Diphenylhydrazine	0.040	Y	Y	0.25		Y	Y	0.25		Y	**No**	UD; effluent data and B are ND
86	Fluoranthene	300	Y	Y	0.26		Y	Y	0.26		N	**No**	Ud;MEC< C & B is ND
87	Fluorene	1,300	Y	Y	0.16		Y	Y	0.16		N	**No**	Ud;MEC< C & B is ND
88	Hexachlorobenzene	0.00075	Y	Y	0.27		Y	Y	0.27		Y	**No**	UD; effluent data and B are ND
89	Hexachlorobutadiene	0.44	Y	Y	0.11		Y	Y	0.11		N	**No**	Ud;MEC< C & B is ND
90	Hexachlorocyclopentadiene	50	Y	Y	0.21		Y	Y	0.21		N	**No**	Ud;MEC< C & B is ND
91	Hexachloroethane	1.9	Y	Y	0.24		Y	Y	0.24		N	**No**	Ud;MEC< C & B is ND
92	Indeno(1,2,3-cd)Pyrene	0.0044	Y	Y	0.29		Y	Y	0.29		Y	**No**	UD; effluent data and B are ND
93	Isophorone	8.4	Y	Y	0.26		Y	Y	0.26		N	**No**	Ud;MEC< C & B is ND
94	Naphthalene	No Criteria	Y	Y	0.17		Y	Y	0.17		N	**Uo**	No Criteria
95	Nitrobenzene	17	Y	Y	0.21		Y	Y	0.21		N	**No**	Ud;MEC< C & B is ND

Step 1			Step 2	Step 3			Step 5					Final Result	
CTR No.	*Constituent name*	*C (µg/L) Lowest (most stringent) Criteria (Enter "No Criteria" for no criteria)*	*Effluent Data Available (Y/N)?*	*Are all data points non-detects (Y/N)?*	*If all data points ND Enter the min detection limit (MDL) (ug/L)*	*Enter the pollutant effluent detected max conc (ug/L)*	*B Available (Y/N)?*	*Are all B data points non-detects (Y/N)?*	*If all data points ND Enter the min detection limit (MDL) (ug/L)*	*Enter the pollutant B detected max conc (ug/L)*	*If all B is ND, is MDL >C?*	*RPA Result*	*Reason*
96	N-Nitrosodimethylamine	0.00069	Y	Y	0.23		Y	Y	0.23		Y	**No**	UD; effluent data and B are ND
97	N-Nitrosodi-n-Propylamine	0.0050	Y	Y	0.22		Y	Y	0.22		Y	**No**	UD; effluent data and B are ND
98	N-Nitrosodiphenylamine	5.0	Y	Y	0.24		Y	Y	0.24		N	**No**	Ud;MEC< C & B is ND
99	Phenanthrene	No Criteria	Y	Y	0.16		Y	Y	0.16		N	**Uo**	No Criteria
100	Pyrene	960	Y	Y	0.25		Y	Y	0.25		N	**No**	Ud;MEC< C & B is ND
101	1,2,4-Trichlorobenzene	5.0	Y	Y	0.14		Y	Y	0.14		N	**No**	Ud;MEC< C & B is ND
102	Aldrin	0.00013	Y	Y	0.0027		Y	Y	0.0027		Y	**No**	UD; effluent data and B are ND
103	alpha-BHC	0.0039	Y	Y	0.006		Y	Y	0.006		Y	**No**	UD; effluent data and B are ND
104	beta-BHC	0.014	Y	Y	0.004		Y	Y	0.004		N	**No**	Ud;MEC< C & B is ND
105	gamma-BHC	0.019	Y	Y	0.0024		Y	Y	0.0024		N	**No**	Ud;MEC< C & B is ND
106	delta-BHC	No Criteria	Y	Y	0.0024		Y	Y	0.0024		N	**Uo**	No Criteria
107	Chlordane	0.00057	Y	Y	0.0023		Y	Y	0.0023		Y	**No**	UD; effluent data and B are ND
108	4,4'-DDT	0.00059	Y	Y	0.0046		Y	Y	0.0046		Y	**No**	UD; effluent data and B are ND
109	4,4'-DDE	0.00059	Y	Y	0.0025		Y	Y	0.0025		Y	**No**	UD; effluent data and B are ND
110	4,4'-DDD	0.00083	Y	Y	0.0022		Y	Y	0.0022		Y	**No**	UD; effluent data and B are ND
111	Dieldrin	0.00014	Y	Y	0.0022		Y	Y	0.0022		Y	**No**	UD; effluent data and B are ND
112	alpha-Endosulfan	0.056	Y	Y	0.0027		Y	Y	0.0027		N	**No**	Ud;MEC< C & B is

Step 1			Step 2	Step 3			Step 5					Final Result	
CTR No.	*Constituent name*	*C (µg/L)* *Lowest (most stringent) Criteria (Enter "No Criteria" for no criteria)*	*Effluent Data Available (Y/N)?*	*Are all data points non-detects (Y/N)?*	*If all data points ND Enter the min detection limit (MDL) (ug/L)*	*Enter the pollutant effluent detected max conc (ug/L)*	*B Available (Y/N)?*	*Are all B data points non-detects (Y/N)?*	*If all data points ND Enter the min detection limit (MDL) (ug/L)*	*Enter the pollutant B detected max conc (ug/L)*	*If all B is ND, is MDL >C?*	*RPA Result*	*Reason*
													ND
113	beta-Endolsulfan	0.056	Y	Y	0.0041		Y	Y	0.0041		N	**No**	Ud;MEC< C & B is ND
114	Endosulfan Sulfate	110	Y	Y	0.0028		Y	Y	0.0028		N	**No**	Ud;MEC< C & B is ND
115	Endrin	0.036	Y	Y	0.0021		Y	Y	0.0021		N	**No**	Ud;MEC< C & B is ND
116	Endrin Aldehyde	0.76	Y	Y	0.0019		Y	Y	0.0019		N	**No**	Ud;MEC< C & B is ND
117	Heptachlor	0.00021	Y	Y	0.0024		Y	Y	0.0024		Y	**No**	UD; effluent data and B are ND
118	Heptachlor Epoxide	0.00010	Y	Y	0.0026		Y	Y	0.0026		Y	**No**	UD; effluent data and B are ND
119-125	PCBs sum	0.00017	Y	Y	1.082		Y	Y	1.082		Y	**No**	UD; effluent data and B are ND
126	Toxaphene	0.00020	Y	Y	0.21		Y	Y	0.21		Y	**No**	UD; effluent data and B are ND

ATTACHMENT G – WATER RECLAMATION REQUIREMENTS AND PROVISIONS

The Permittee's reclamation system includes urban and agricultural use sites. The Water Reclamation Findings, Requirements, and Provisions in sections A, B and C apply to both urban and agricultural use sites, unless specifically identified as applying to just urban [Urban] or just agriculture [Ag].

A. Water Reclamation Findings

1. In 1977, the State Water Board adopted Resolution No. 77-1, titled "Policy with Respect to Water Reclamation in California" (Resolution No. 77-1). Resolution No. 77-1, in part, encourages the use of recycled water in the state.

2. On February 3, 2009, the State Water Board adopted Resolution No. 2009-0011, titled "Adoption of a Policy for the Water Quality Control of Recycled Water" (Recycled Water Policy) (Resolution No. 2009-0011). The goal of Resolution No. 2009-0011 is to increase the use of recycled water from municipal wastewater sources that meets the definition in Water Code section 13050(n). In accordance with the Recycled Water Policy, activities involving recycled water use that could impact high quality waters are required to implement best practicable treatment or control of the discharge necessary to ensure that pollution or nuisance will not occur, and the highest water quality consistent with the maximum benefit to the people of the state will be maintained.

3. Streamlined Permitting

a. Eligibility

Elements of the Permittee's proposed reclamation project meet the criteria for streamlined permitting (Paragraph 7(c) of the Recycled Water Policy) for the following reasons:

i. The reclamation project complies with title 22 regulations identified in Finding 4, below.

ii. The proposed irrigation uses will not exceed agronomic rates and will not occur when soils are saturated. An operations and management plan will be developed describing how appropriate irrigation amounts and rates will be applied and may include, but not be limited to, proper design and maintenance of irrigation systems, accurate monitoring of the amount of water delivered, developing water budgets for use areas, providing supervisor training, and

installing smart controllers. An operations and management plan may be developed to cover multiple sites.

iii. A salt and nutrient management plan (SNMP) has not been adopted for the groundwater basin underlying the recycled water use areas. Order section VI.C.1.g states that this Order may be reopened to incorporate provisions consistent with any SNMP(s) adopted by the Regional Water Board.

iv. The Permittee will communicate to users the nutrient levels in the recycled water so that users can appropriately evaluate fertilizer needs.

b. Streamlined Permitting Requirements. According to Paragraph 7(b)(4) of the Recycled Water Policy, irrigation projects that qualify for streamlined permitting are not required to conduct project-specific receiving water and groundwater monitoring unless otherwise required by an applicable SNMP. This Order requires the Permittee to comply with any future SNMP adopted by the Regional Water Board. Until a SNMP is adopted, groundwater monitoring could be required as needed for development of the SNMP, or if necessary to assess impacts of effluent disposal to the reclamation system.

4. The California Department of Public Health (CDPH) (formerly California Department of Health Services or DHS) has established statewide reclamation criteria in Chapter 3, Division 4, title 22, CCR, sections 60301 through 60355 (hereinafter title 22) for the use of recycled water for irrigation, impoundments, cooling water, and other purposes. The CDPH has also established Guidelines for Use of Reclaimed Water. This Order (including Attachment G) implements the title 22 recycled water criteria.

5. In 1996, the State Water Board and CDPH set forth principles, procedures, and agreements to which the agencies committed themselves, relative to the use of recycled water in California, in a document titled Memorandum of Agreement between the Department of Health Services and the State Water Resources Control Board on the Use of Reclaimed Water (MOA). This Order is consistent with the MOA.

6. This Order implements Water Code section 13523.1 which authorizes issuance of a Master Reclamation Permit to suppliers or distributors, or both, of recycled water in lieu of issuing individual water reclamation requirements to each recycled water user.

7. The Permittee shall maintain an up-to-date, CDPH-approved title 22 Engineering Report for the use of recycled water as pursuant to sections 60313(d), 60314, and 60323 of title 22, as required by Water Reclamation Provision C.2 of this Attachment. The Permittee must submit updates to the Engineering Report to CDPH. <u>The Permittee shall also submit its title 22 engineering report and any approval letters prepared by CDPH to the Regional Water Board Executive Officer. Engineering</u>

report(s) shall be prepared by a properly qualified engineer registered in California and experienced in the field of wastewater treatment, and shall contain (1) a description of the design of the reclamation system; (2) a contingency plan which will assure that no untreated or inadequately treated wastewater will be delivered to the use areas; and (3) a cross-connection control program (title 17 of the CCR) where a dual-plumbed system is used. Engineering reports shall clearly indicate the means for compliance with CCR title 22 regulations and this Order."

8. This Order requires the Permittee to minimize the potential for surface runoff of recycled water, but recognizes that even with diligent implementation of BMPs, incidental runoff events may occur on occasion. Incidental runoff is defined as unintended small amounts (volume) of runoff from recycled water use areas where agronomic rates and appropriate best management practices are being implemented. Examples of incidental runoff include unintended, minimal over-spray from sprinklers that escapes the recycled water use area or accidental breakage of a sprinkler head on a properly maintained irrigation system. Water leaving a recycled water use area is not considered incidental if it is due to negligent maintenance or poor design of the facility infrastructure, if it is due to excessive application, if it is due to intentional overflow or application, or if it is due to negligence. Incidental runoff events are typically infrequent, low volume, accidental, not due to a pattern of neglect or lack of oversight, and are promptly addressed.

9. This Order authorizes the Permittee to reuse treated municipal wastewater that complies with reclamation specifications contained in section IV of this Order for uses that have been addressed in an approved title 22 Engineering Report and for which recycled water user agreements have been negotiated and or/recycled water use permits have been issued.

10. Effluent Limitations included in this Order will assure compliance with requirements contained in title 22 and the CDPH (DHS)/State Water Board MOA.

11. The Permittee must demonstrate that the storage and use of recycled water complies with applicable state regulations and the Basin Plan.

12. The Regional Water Board consulted with CDPH, the Sonoma County Health Department, and the Marin Sonoma Mosquito and Vector Control District considered any recommendations regarding public health aspects for this use of recycled water.

B. Water Reclamation Requirements

1. The use of recycled water shall not result in unreasonable waste of water. Recycled water shall not be applied at greater than hydraulic agronomic rates.

2. The use of recycled water shall not create a condition of pollution or nuisance as defined in Water Code section 13050(m).

3. All recycled water provided pursuant to this Order shall be treated and managed in conformance with all applicable provisions of the Recycled Water Policy.

4. The Permittee shall be responsible for ensuring that recycled water meets the quality standards of section IV.C and D of this Order and that all users of recycled water comply with the terms and conditions of this Order and with any rules, ordinances, or regulations adopted by the Permittee.

5. The Permittee shall discontinue delivery of recycled water during any period in which there is reason to believe that the requirements for use as specified in this Order or the requirements of CDPH are not being met and cannot be corrected in a timely manner. The delivery of recycled water shall not resume until all conditions have been corrected.

6. The Permittee shall notify recycled water users if recycled water that does not meet the recycled water quality requirements of this Order is released into the reclamation system.

7. The Permittee shall require each recycled water user to report to the Permittee all noncompliance with recycled water regulations identified in this Order, including runoff incidents not meeting the conditions of incidental runoff. All reported observations of noncompliance shall be included in the Permittee's Quarterly Recycled Water Report.

8. The Permittee shall identify a recycled water use supervisor who is responsible for the recycled water system at each use area under the user's control. Specific responsibilities of the recycled water supervisor include, the proper installation, operation, and maintenance of the irrigation system; compliance of the project with the Permittee's rules and regulations (e.g., recycled water use ordinance); prevention of potential hazards; and preservation of the recycled water distribution system plans in "as built" form. The Permittee shall ensure that each recycled water use supervisor is appropriately trained regarding recycled water rules and regulations and in the use of recycled water. The Permittee shall maintain daytime and emergency contact telephone numbers for the recycled water use supervisor for each recycled water use site.

9. Application of recycled water to use areas shall not exceed the nitrogen or hydraulic loading reasonably necessary to satisfy the nitrogen or water uptake needs of the use area considering plant, soil, climate, and nutrient demand (i.e., generally accepted agronomic rates).

a. Hydraulic loading to any individual recycled water use site shall be at reasonable agronomic rates designed to minimize percolation of wastewater constituents below the evaporative and root zone.

b. The seasonal nutritive loading of use areas, including the nutritive value of organic and chemical fertilizers and of the recycled water, shall not exceed the nutritive demand of the landscape or vegetation receiving the recycled water. The Permittee shall communicate to the users the nutrient levels in the recycled water.

c. The Permittee's description of agronomic application compliance shall be included in the Annual Recycled Water Summary (Section X.D.2.b of the Monitoring and Reporting Program – Attachment E).

10. Recycled water shall not be applied on water-saturated or frozen ground or during periods of precipitation such that runoff is induced.

11. Recycled water shall not be allowed to escape the recycled use area(s) in the form of surface runoff. [CCR title 22, section 60310(e)] However, incidental runoff of recycled water, such as unintended, minimal over-spray from sprinklers that escapes the recycled water use area, or accidental breakage of a sprinkler head on a properly maintained irrigation system, is not a violation of this Order.

12. Best management practices that are protective of groundwater and surface water quality and human health shall be developed and implemented to achieve an efficient irrigation system. At a minimum, the Permittee shall implement the required BMPs identified in the City's Recycled Water User's Guide. Practices and strategies to prevent the occurrence of runoff shall include, where appropriate, but not be limited to:

a. All new recycled water use sites shall include a 100-foot setback to all surface waters or provide written documentation of appropriate best management practices that will be implemented in order to prevent or minimize the potential for runoff discharging to surface water;

b. Urban recycled water use sites shall maintain appropriate setbacks to the street gutter and other inlets to the storm drain system based on site conditions or implement alternative means to prevent the discharge of runoff to surface waters. [Urban]

c. Implementation of an Operations and Maintenance Plan that provides for detection of leaks (for example, from sprinkler heads), and correction within 72 hours of learning of the runoff, or prior to the release of 1,000 gallons, whichever comes first.

d. Proper design and aim of sprinkler heads;

e. Proper design and operation of the irrigation system;

f. Refraining from application during precipitation events;

g. Application of recycled water at an agronomic rate that does not exceed the water or nutrient demand of the crop or vegetation being irrigated;

h. Use of repeat start times and multiple water days to increase irrigation efficiency and reduce runoff potential;

i. Maintenance of recycled water infrastructure (pipelines, pumps, etc.) to prevent and minimize breakage and leaks; and

j. Adequate protection of all recycled water reservoirs and ponds against overflow, structural damage, or a reduction in efficiency resulting from a 25-year, 24-hour storm or flood event or greater, and notification of the Regional Water Board Executive Officer, if a discharge occurs.

13. Use areas that are spray irrigated and allow public access shall be irrigated during periods of minimal use. Consideration shall be given to allow maximum drying time prior to subsequent public use. [Urban]

14. Direct or windblown spray, mist, or runoff from irrigation areas shall not enter dwellings, designated outdoor eating areas, or food handling facilities. [CCR title 22, section 60310(e)(3)], nor shall it enter any other area where the public would be accidentally exposed to recycled water, such as roadways or neighboring properties. BMPs shall be implemented that will minimize both public contact with recycled water and recycled water application onto areas not under the control of the recycled water user.

15. Drinking water fountains shall be protected against contact with recycled water spray, mist, or runoff. [CCR title 22, section 60310(e)(3)] [Urban]

16. All recycled water equipment, pumps, piping, valves, and outlets shall be appropriately marked to differentiate them from potable facilities.

17. The Permittee shall implement the requirements of the California Health and Safety Code (CHSC), section 116815 regarding the installation of purple pipe. CHSC section 116815 requires that "all pipes installed above or below the ground, on or after June 1, 1993, that are designed to carry recycled water, shall be colored purple or distinctively wrapped with purple tape." Section 116815 also contains exemptions

that apply to municipal facilities that have established a labeling or marking system for recycled water used on their premises and for water delivered for agricultural use. The Permittee shall document compliance with this requirement for new sites or newly retrofitted piping on an annual basis in its annual monitoring report. The Permittee shall continue to implement the requirements of CHSC section 116815 during the term of this Order. [Urban]

18. The portions of the recycled water piping system that are in areas subject to access by the general public shall not include any hose bibbs, except as explicitly allowed by CDPH. Only quick couplers that differ from those used on the potable water system shall be used on the portions of the recycled water piping system in areas subject to public access. [CCR title 22, section 60310(i)] [Urban]

19. Cross-connections shall not occur between any recycled water system and any separate system conveying potable water. [22 CCR, section 60310(h)] Supplementing recycled water with potable water shall not be allowed except through air gap separation [CCR title 22, section 30615].

20. Disinfected tertiary recycled water shall not be irrigated within 50 feet of any domestic water supply well or domestic water supply surface intake, unless the technical requirements specified in CCR title 22, section 60310(a) have been met and approved by CDPH.

21. The use of recycled water shall not cause degradation of any water supply, except in conformance with the State Antidegradation Policy.

22. Areas irrigated with recycled water shall be managed to prevent ponding and conditions conducive to the proliferation of mosquitoes and other disease vectors, and to avoid creation of a public nuisance or health hazard. Irrigation water shall infiltrate completely within a 24-hour period.

23. All areas where recycled water is used that are accessible to the public shall be posted with signs that are visible to the public, in a size no less than 4 inches high by 8 inches wide that include the following wording: 'RECYCLED WATER – DO NOT DRINK'. [CCR title 22, section 60310(g)] Each sign shall display an international symbol similar to that shown in CCR title 22, Figure 60310-A. These warning signs shall be posted at least every 500 feet with a minimum of a sign at each corner and access road. CDPH may accept alternative signage and wording, or an educational program, provided that applicant demonstrates to CDPH that the alternative approach will assure an equivalent degree of public notification.

24. DHS (now CDPH) Guidance Memo No. 2003-02: Guidance Criteria for the Separation of Water Mains and Non-Potable Pipelines provides guidance for the separation of

new potable water mains and recycled water pipelines which shall be implemented as follows: [Urban]

a. There shall be at least a four-foot horizontal separation between all pipelines transporting recycled water and those transporting disinfected tertiary recycled water and new potable water mains.

b. There shall be at least a one-foot vertical separation at crossings between all pipelines transporting recycled water and potable water mains, with the potable water main above the recycled water pipeline, unless approved by the CDPH.

c. All portions of the recycled water pipeline that cross under a potable water main shall be enclosed in a continuous sleeve.

d. Recycled water pipelines shall not be installed in the same trench as new water mains.

e. Where site conditions make it impossible to comply with the above conditions, any variation shall be approved by CDPH and comply with alternative construction criteria for separation between sanitary sewers and potable water mains as described in the CDPH document titled "Criteria for Separation of Water Mains and Sanitary Sewers", treating the recycled water line as if a sanitary sewer.

25. A minimum freeboard, consistent with pond design, but not less than two feet, shall be maintained under normal operating conditions in any reservoir or pond containing recycled water. When extraordinary operating conditions necessitate a freeboard below the overflow structure of less than two feet, the Permittee will document the variance in the monthly self-monitoring report. The report will include an explanation of the circumstances under which the variance is required, the estimated minimum freeboard during the extraordinary period, and any permit noncompliance occurring as a result of the variance.

26. The use of recycled water for dust suppression shall only occur during periods of dry weather, shall be limited to periods of short duration, and shall be limited to areas under the control of the Permittee or areas for which the Permittee has explicitly permitted such use.

27. The Permittee shall comply with any SNMP that is adopted by the Regional Water Board in the future.

28. A copy of the recycled water rules and regulations, irrigation system layout map, and a Recycled Water User's Guide shall be maintained at each use area. These documents shall be available to operating personnel at all times.

C. Water Reclamation Provisions

1. The Permittee shall manage recycled water, and shall develop, establish and enforce administrative procedures, engineering standards, rules, ordinances and/or regulations governing the design and construction of recycled water systems and use facilities and the use of recycled water in accordance with the criteria established in CCR title 22 and this Order. The Permittee shall develop user agreements requiring user compliance with CCR title 22 and this Order. Water reclamation engineering standards, rules, ordinances and/or regulations shall be approved by the Regional Water Board Executive Officer and CDPH.

Upon approval of the Permittee's procedures, engineering standards, rules, ordinances, and/or regulations, the Permittee may authorize specific additional water reclamation projects, on a case-by-case basis, in accordance with the approved program and agreements (Attachment G).

2. The Permittee shall submit revised and/or additional engineering report(s) to the Regional Water Board and CDPH, prior to initiating any recycled water use (e.g., new industrial use, recreational surface impoundments, water cooling, new dual-plumbed system, etc.) not addressed in any previously submitted CCR title 22 engineering report(s). Any revision(s) to a title 22 engineering report shall be prepared by a properly qualified engineer registered in California and experienced in the field of wastewater treatment.

3. The Permittee shall conduct periodic inspections of the recycled water use areas, facilities, and operations to monitor and assure compliance with the conditions of this Order. The Permittee shall take whatever actions are necessary, including termination of delivery of recycled water, to correct any user violations. Where dual-plumbed systems are utilized, the Permittee shall, upon prior notification to the user, conduct regular inspections to assure cross-connections are not made with potable water systems and CDPH approved backflow prevention devices are installed and operable.

4. The Permittee shall be responsible for ensuring that recycled water meets the quality standards of this Order and for the operation and maintenance of transport facilities and associated appurtenances. The Permittee shall hold the recycled water users responsible for the application and use of recycled water on their designated areas and associated operations and maintenance in accordance with all applicable CCR title 22 requirements and this Order. A designated site supervisor involved in the operation and/or maintenance of the recycled water system shall attend training regarding the safe and efficient operation of recycled water use facilities.

5. The Permittee shall notify the Regional Water Board Executive Officer in anticipation of reclaiming water at a new location, prior to commencement of reclamation activities at the new location. The notice shall include the following: site location; acreage involved; the specific use to be made of the recycled water; County Assessor Parcel number(s); a map of the use site showing the site boundaries in relation to the irrigation area and identifying the location of waterbodies, domestic wells, drinking fountains and other features that require protection; name of property owner; name of recycled water user; name and telephone number of recycled person or persons responsible for operation of the recycled water (water use site supervisor); and a User Reclamation Plan. The User Reclamation Plan shall estimate the anticipated volume of recycled water to be used and any special site conditions that require BMPs or other management practices beyond those identified in the Recycled Water Users' Guide.

6. If, in the opinion of the Regional Water Board Executive Officer, recycled water use at proposed new locations cannot be adequately regulated under the Master Reclamation Permit, a Report of Waste Discharge may be requested and individual Water Reclamation Requirements may be adopted.

7. Prior to the initial operation of any dual-plumbed recycled water system, and annually thereafter, the Permittee shall ensure that the dual-plumbed system within each facility and use area is inspected for possible cross connections with the potable water system. The recycled water system shall also be tested for possible cross connections at least once every four years. The testing shall be conducted in accordance with the method described in the Engineering Report. The inspections and the testing shall be performed by a cross connection control specialist certified by the California-Nevada section of the American Water Works Association or an organization with equivalent certification requirements. A written report documenting the result of the inspection or testing for the prior year shall be submitted to CDPH and the Regional Water Board by March 1 of each year. [CCR title 22, section 60316] [Urban]

8. If the Permittee delivers recycled water to any dual-plumbed recycled water system(s), the Permittee shall notify CDPH and the Regional Water Board of any incidents of backflow from the dual-plumbed recycled water system into the potable water system within 24 hours of the discovery of the incident. [Urban]

9. If the Permittee delivers recycled water to any dual-plumbed recycled water system(s), any backflow prevention device installed to protect the public water system serving the dual-plumbed recycled water system shall be inspected and maintained in accordance with section 7605 of title 17, CCR. [Urban]

ATTACHMENT G-1: APPROVED RECYCLED WATER USE SITES

The recycled water use sites identified in the table below and on the attached map are approved recycled water use sites. To maintain approval of these sites, the Permittee must submit technical reports for approval by the Regional Water Board Executive Officer to demonstrate that recycled water is applied in a manner that is protective of water quality, in compliance with Attachment G.

Table G-1. Approved Recycled Water Use Sites

Owner	APN	Type of Use/Irrigation Types	Total Irrigated Acreage	Volume of Recycled Water (Acre-feet/year)
Simonne LLC	010-320-032	Landscape Irrigation	0.53	4.6
Sonoma County Indian Health Project Inc.	010-320-022	Landscape Irrigation	0.72	2.7
City of Santa Rosa	010-320-019	Landscape Irrigation	1.0	2.0
City of Santa Rosa	010-680-014	Landscape Irrigation	0.46	1.1
Salvation Army	010-680-003	Landscape Irrigation	0.15	0.3
Madalyn LLC	010-680-015	Landscape Irrigation	0.9	1.1
Pacific Gas & Electric Co.	010-680-013	Landscape Irrigation	1.12	2.8
Marco Antonio LLC	010-680-016	Landscape Irrigation	0.57	1.4
1053 Bush LLC et al	146-040-002	Landscape Irrigation	0.58	3.0
Chang Income Property Partnership LP	010-381.067	Landscape Irrigation	0.71	2.3
Glenbrook Homeowners Association	146-130-041	Landscape Irrigation	1.58	6.0
City of Santa Rosa	010-361-055	Landscape Irrigation	2.31	2.6
Stony Point West LP	034-630-005 010-680-007	Landscape Irrigation	0.72	4.5
Westgate Homeowners Association	010-600-010	Landscape Irrigation	2.11	4.9
ABNK Properties LLC	146-040-025	Landscape Irrigation	2.03	2.8
Wyvern Restaurants	146-040-034	Landscape Irrigation	0.5	0.2
Presbytery of the Redwoods	010-311-017	Landscape Irrigation	2.46	0.7
Caltrans	N/A	Landscape Irrigation	2.2	0.3
Caltrans	N/A – Hwy Median at Hwy 12 & Stony Point	Landscape Irrigation	10.23	0.3
City of Santa Rosa	125-243-041	Landscape Irrigation	0.02	0.1
City of Santa Rosa	125-243-041	Landscape Irrigation	0.17	0.2
City of Santa Rosa	N/A – Street Median on W. Ninth Street	Landscape Irrigation	0.10	0.1
City of Santa Rosa	010-340-002	Landscape Irrigation	20.31	63
City of Santa Rosa	010-320-007	Landscape Irrigation	11.06	17.8

Table G-1. Approved Recycled Water Use Sites

Owner	APN	Type of Use/Irrigation Types	Total Irrigated Acreage	Volume of Recycled Water (Acre-feet/year)
City of Santa Rosa	010-320-030	Landscape Irrigation	0.4	1.7
Sonoma County Water Agency	152-133-007	Landscape Irrigation	0.51	0.2
City of Santa Rosa	010-320-030	Landscape Irrigation	1.43	4.2
Aggio, Val	130-200-063 130-200-064	Pasture or Fodder Crop	156	130
Codding Enterprises	046-051-045	Landscape Irrigation	26	23
Allen	130-231-020	Pasture or Fodder Crop	7	7.7
City of Santa Rosa – Alpha	060-060-051 060-060-052	Pasture or Fodder Crop	309	250
Applebees	143-391-084	Landscape Irrigation	1	.6
Ambrosini Home	035-011-009 130-020-034 130-020-035	Pasture or Fodder Crop	73	59.5
City of Santa Rosa – Walker Avenue Nursery	134-232-031	Turf, Vegetables/Specialty	10	2.8
Balletto	060-010-036 060-010-037 060-010-040	Vineyard	200	42
Beretta	134-051-012 134-051-013	Pasture or Fodder Crop	220	220
Bevill Family Trust	130-010-033	Vineyard	17	.2
City of Santa Rosa – Bottini	134-232-034	Pasture or Fodder Crop	2	0
Amato – Santa Rosa Horse Co	130-200-016 130-200-059	Pasture or Fodder Crop	40	25
City of Santa Rosa – Brown	060-060-059 060-060-060	Pasture or Fodder Crop	352	190
Browning	134-231-024	Pasture or Fodder Crop	10	0
Carinalli, D	060-060-036 060-060-041 060-060-042 060-060-057	Pasture or Fodder Crop Vineyard	80 85	120
Gonella	035-590-007	Landscape Irrigation	2	1.4
City of Rohnert Park	143-160-008 143-061-016 143-340-031 047-400-084 047-500-008 047-500-003 143-330-070 143-330-016	Landscape Irrigation. Toilet flushing	64	95

Table G-1. Approved Recycled Water Use Sites

Owner	APN	Type of Use/Irrigation Types	Total Irrigated Acreage	Volume of Recycled Water (Acre-feet/year)
	143-330-036 143-311-021 143-410-013 159-440-034 143-051-080 143-051-078 143-051-077 143-051-076 143-051-065 143-040-124			
Cotati / R.P. School	143-040-082 143-061-018 143-160-013 143-160-009 143-340-015 047-500-007 143-340-003 143-340-004 045-253-018 143-311-037 143-311-044	Landscape Irrigation	77	102
Countryside North	035-590-075	Landscape Irrigation	10	6.9
Dei / Nahmens	130-210-001	Pasture or Fodder Crop	90	145
Dei – Home	060-290-041	Pasture or Fodder Crop	160	195
Dei – LaFranconi / Lafayette	035-171-007 060-050-001 060-050-007	Pasture or Fodder Crop	210	290
Denner	057-070-015 057-080-026	Pasture or Fodder Crop Vineyard Turf, Vegetables/Specialty	165 60 100	440
Dotti	060-040-002 060-040-005 060-040-006	Pasture or Fodder Crop	150	200
City of Santa Rosa – Freitas	060-050-038	Turf, Vegetables/Specialty	10	0
Fresh Choice / Oil Stop	045-083-001 045-083-002	Landscape Irrigation	1	2.5
Gallo	024-050-012 046-181-023 046-181-024 046-181-025 046-182-001 046-182-003	Vineyard	250	155

Table G-1. Approved Recycled Water Use Sites

Owner	APN	Type of Use/Irrigation Types	Total Irrigated Acreage	Volume of Recycled Water (Acre-feet/year)
	046-216-004 113-210-056			
Gipson	035-590-016	Landscape Irrigation	2	.2
Fossell	063-150-024	Pasture or Fodder Crop	15	5
Guggiana	063-180-001	Vineyard	25	0
Mononi	130-030-036	Vineyard	22	2.1
Gradney	134-232-032 134-232-030	Pasture or Fodder Crop	10	5.1
Hansen	130-030-028 130-030-029 130-030-033 130-020-036 130-020-037	Pasture or Fodder Crop Vineyard	64 60	150
Hansel	130-210-022	Vineyard	65	7.5
Hendrix	035-590-009	Landscape Irrigation	2	.9
House	035-590-010	Landscape Irrigation	1	1.4
Bishop	063-120-020	Pasture or Fodder Crop	10	3.3
Hylbak	035-590-008	Landscape Irrigation	2	1.5
Ibleto	046-061-029 046-061-030	Vineyard	37	15
City of Santa Rosa – Devoto	134-232-035	Turf, Vegetables/Specialty	7	3.7
City of Santa Rosa – McEnnis / Lee	060-060-007	Turf, Vegetables/Specialty	7	2.5
Henry	130-491-015	Pasture or Fodder Crop	23	34
City of Santa Rosa – Keegan	060-060-044	Pasture or Fodder Crop	14	27.4
City of Santa Rosa – Kelly	060-020-001 060-020-081 060-020-084 060-020-082 060-020-085 060-010-005 060-010-028 060-010-032 060-010-030 060-010-027	Pasture or Fodder Crop	318	302
Korbel	130-010-073	Vineyard	29	5.5
Korbel / Rasmussen	034-110-029 034-110-054 034-110-055	Vineyard	90	14.2
Kunde	057-070-040	Vineyard	250	69

Table G-1. Approved Recycled Water Use Sites

Owner	APN	Type of Use/Irrigation Types	Total Irrigated Acreage	Volume of Recycled Water (Acre-feet/year)
	057-070-041 057-070-047 057-070-050	Landscape Irrigation	10	
Laguna Treatment Plant	062-240-025	Landscape Irrigation	3	1
Brady	134-141-007	Pasture or Fodder Crop	19	11
Mack	130-020-043	Pasture or Fodder Crop Vineyard	10 4	1.4
Martinelli	034-110-072	Vineyard	67	10
Matos	060-060-030 060-060-031	Pasture or Fodder Crop	51	91
Mello	060-040-034 060-050-002	Pasture or Fodder Crop	110	200
Riebli/Sunrise Farms	134-202-019	Pasture or Fodder Crop	45	16.5
Morrison	046-011-014 046-011-035 046-011-036	Pasture or Fodder Crop	100	115
City of Rohnert Park – Fox Tail Golf Course	143-360-046 143-360-047 143-360-048 143-280-021 143-280-061 143-280-078 143-280-075 143-280-045 160-010-003 160-010-021	Landscape Irrigation	250	400
Muelrath	134-202-010 134-202-018	Pasture or Fodder Crop Turf, Vegetables/Specialty	38 14	103
Noel	035-590-015	Landscape Irrigation	1	2.2
Nommsen	063-180-040 063-180-045	Pasture or Fodder Crop	95	4.5
Nonella	134-010-034 134-010-052	Pasture or Fodder Crop Vineyard	30 10	84
Vanazza Vineyard	130-230-071	Vineyard	60	11
Pacheco	060-040-017	Vineyard	50	4.9
Parker Compumotor	143-040-065 143-040-070	Landscape Irrigation	3	6.4
Peters	062-240-026 062-240-027 062-240-028 062-240-001	Pasture or Fodder Crop	130	180

Table G-1. Approved Recycled Water Use Sites

Owner	APN	Type of Use/Irrigation Types	Total Irrigated Acreage	Volume of Recycled Water (Acre-feet/year)
Carinelli, D – Home	062-220-002 062-220-003	Pasture or Fodder Crop	30	42
Poncia – Home	046-032-034 046-032-033 046-032-035 046-032-023	Pasture or Fodder Crop	100	60
Press Democrat	143-040-111 143-040-112	Landscape Irrigation	7	1.5
Rancho Laguna/LaFranchi	057-080-029	Pasture or Fodder Crop Vineyard	163 60	184
Robbins	130-020-018	Pasture or Fodder Crop	20	26.4
City of Rohnert Park – Roberts Lake	160-010-032	Landscape Irrigation	10	26
Rued	057-080-038	Pasture or Fodder Crop Vineyard	30 65	10
Underwood, Tracy	130-020-041	Pasture or Fodder Crop	40	28
Washoe Creek Golf Course	046-102-017 046-102-018	Landscape Irrigation	19	22
Sanchietti	060-030-012 060-030-029 060-030-034	Vineyard	60	23.8
Sonoma State University	047-131-011	Landscape Irrigation, toilet flushing, fire supression	90	160
State Farm	143-051-072	Landscape Irrigation	7	0
Mountain Shadows Apt	143-300-029	Landscape Irrigation	2	5.8
Rohnert Park Self Storage	143-391-081	Landscape Irrigation	1	1.8
Dei – Stone	060-330-011 130-250-014 130-250-049 130-250-050	Pasture or Fodder Crop	86	160
Moore	130-250-038	Vineyard	10	2.5
Strunk	063-120-009 063-120-012 063-120-018	Vineyard Turf, Vegetables/Specialty	10 29	58
Terri-Linda / Poncia	045-071-002 045-071-003 045-071-004 045-071-005 045-071-006 045-072-012 045-072-013 045-072-014	Pasture or Fodder Crop	130	115

Table G-1. Approved Recycled Water Use Sites

Owner	APN	Type of Use/Irrigation Types	Total Irrigated Acreage	Volume of Recycled Water (Acre-feet/year)
	045-072-015 046-021-031 046-021-032 046-021-033 046-021-034 046-021-035 046-021-036 046-021-037 046-021-038 046-021-028 046-021-029 046-021-025 046-021-026 046-021-024 134-261-003 134-264-005 134-264-006 134-264-007 134-264-008 134-264-003			
Tomrose	046-031-021	Pasture or Fodder Crop	30	36
Wells	063-170-015 063-170-017	Pasture or Fodder Crop	16	10.3
Collier	063-150-010	Pasture or Fodder Crop	14	3
Fomasi	063-170-001 063-170-002	Pasture or Fodder Crop	14	7
Grech	063-160-011	Pasture or Fodder Crop	16	0
Redwood Creek Apts	143-391-083	Landscape Irrigation	5	12.7
Errichetti	134-211-013	Landscape Irrigation	4.7	1
Ryan	063-120-001	pasture Irrigation	10	15
Rojas	130-250-057	Vineyard	10	2
Castaneda (Spider Web)	130-040-017	Vegetable Irrigation	40	45
New Recycled Water Sites to be added as approved				

ATTACHMENT H: SANTA ROSA NUTRIENT OFFSET PROGRAM

California Regional Water Quality Control Board
North Coast Region

RESOLUTION NO. R1-2008-0061
Approving
Santa Rosa Nutrient Offset Program
for the

City of Santa Rosa
Santa Rosa Subregional Water Reclamation Facility
Sonoma County

FINDINGS

The California Regional Water Quality Control Board, North Coast Region, (hereinafter Regional Water Board) finds that:

1. The City of Santa Rosa owns and operates the Santa Rosa Subregional Water Reclamation Facility (the "Facility"), a publicly owned treatment works. The Facility seasonally discharges into the Laguna de Santa Rosa and its tributaries. The Laguna de Santa Rosa is 303(d) listed for, among other constituents, low dissolved oxygen, nitrogen, and phosphorus.

2. The Regional Water Board adopted a renewed National Pollutant Discharge Elimination System ("NPDES") Permit for the City's Facility, Order No. R1-2006-0045, CA0022764, ("Permit") on September 20, 2006.

3. The Permit imposed the following final effluent limitations for nitrogen and phosphorous based on the Water Quality Control Plan's narrative water quality objective for biostimulatory substances:

   "The Regional Board plans to develop and adopt total maximum daily loads (TMDLs) for nitrogen and phosphorus which will specify wasteload allocations (WLAs) for point sources and load allocations (LA) for non-point sources, as appropriate. Following the adoption of these TMDLs by the Regional Water Board, this Order will be issued with final WQBELs based on applicable WLAs. Alternatively, in the absence of a TMDL, at the end of the compliance schedule authorized by this Order, the final effluent limitation for nitrogen and phosphorus will be zero, or no net loading."

See Permit at Effluent Limitations section IV.A.1.g.

4. Footnote 5 to Effluent Limitations section IV.A.1.g.states:
   "A 'no net loading' effluent limit may be met by: 1) reducing the effluent concentration below detectable levels through source control and/or treatment; 2) reducing loads through recycling/reclamation; and/or 3) reducing loads elsewhere in the watershed by an amount at least equal to the amount discharged (and of equivalent bioavailability) through an approved offset program."

5. Regional Water Board and City staff prepared the Santa Rosa Nutrient Offset Program ("Nutrient Offset Program"), attached hereto as Attachment 1, to qualify as the offset program referenced in footnote 5 to Effluent Limitations section IV.A.1.g. that the City can implement to comply with Effluent Limitations section IV.A.1.g. of the Permit.

6. The City of Santa Rosa has undertaken significant steps to reduce nitrogen concentrations in its effluent and to reduce nutrient loading to the Laguna de Santa Rosa. Activities currently underway or completed include improvements to its activated sludge treatment process to achieve partial denitrification, increased water recycling, increased diversion of effluent to the Geysers Steamfields, and development and implementation of programs involving source control, water conservation, biosolids application management and storm water control. The Nutrient Offset Program will provide a framework for achieving additional nutrient load reductions during the interim period before the nutrient TMDL for the Laguna de Santa Rosa is implemented.

7. The Nutrient Offset Program is designed to encourage the City to undertake nutrient reduction projects that improve habitat and ecosystem conditions, and to encourage the City to undertake nutrient reduction projects that reduce or eliminate non-point source or other discharges not currently subject to waste discharge requirements, waiver, or other permits. However, the Nutrient Offset Program prohibits the City from continuing to receive nutrient reduction credits for a project that later becomes subject to additional regulatory controls imposed by the Regional Water Board. The Offset Program shall in no way diminish the force and effect of any current or future controls on non-point source or other discharges imposed by the Regional Water Board. Non-point source or other discharges in violation of prohibitions or water quality standards remain subject to enforcement under the Water Code.

8. To ensure that no nutrient reduction project will overlap with best management practice activities required by the NPDES permit for the City's municipal separate storm water system ("MS4 Permit"), under the Nutrient Offset Program, the Executive Officer shall not approve project proposals for storm water best management practice activities that are required by the City's current MS4 Permit (Order No. R1-2003-0062, NPDES Permit CA0025054) or the renewed MS4 Permit (scheduled for adoption in late 2008).

9. The Nutrient Offset Program is consistent with the federal and state anti-degradation policies. The discharge to be offset is an existing point source, not a new discharge, and any source reduction efforts through the offset program most certainly will improve the receiving waters. To account for any uncertainties in granting reduction credits, all projects proposals must include an appropriate Margin of Safety (MOS), which can be described numerically, or by spatial and temporal aspects of a given proposal. The Executive Officer retains discretion to request reasonable modifications to the nutrient reduction credit ratio of a specific proposal or deny the proposal. In addition, the Executive Officer shall ensure

that any banked credits are distributed in a balanced manner to satisfy the no-net loading function, both spatially and temporally. In accepting credits proposed in the City's annual report, the first being submitted prior to the discharge season in 2011-2012, the Executive Officer shall ensure that the City's proposal distributes any banked credits in a manner that maximizes the benefit to water quality.

10. No CEQA documentation is required at this time. The program implements provisions of the NPDES permit, which are statutorily exempt from CEQA under Water Code section 13389. Individual proposals must comply with CEQA as explicitly provided for on page 3 of the Program. In the absence of specific proposals, any environmental analysis would be too remote and speculative to analyze. Moreover, because Regional Water Board staff maintains discretion to disapprove any proposal, the Program does not commit the Regional Water Board to any implementation. The Regional Water Board's approval of the Offset Program is a decision to establish procedural rules on how an individual proposal might be approved, and is independent of any proposal that might be approved and have an environmental effect. (See Cal. Code Regs., tit. 14, §15061(b)(3).)

11. Regional Water Board staff recommends Regional Water Board approval of the Santa Rosa Nutrient Offset Program.

RESOLUTION

THEREFORE, it is hereby resolved that:

The Regional Water Board approves the Santa Rosa Nutrient Offset Program, attached hereto as Attachment 1, as the approved offset program referenced in footnote 5 to Effluent Limitations section IV.A.1.g. of the Permit, that the City of Santa Rosa can implement to comply with Effluent Limitations section IV.A.1.g. of the Permit.

CERTIFICATION

I, Catherine E. Kuhlman, Executive Officer, do hereby certify that the foregoing is a full, true, and correct copy of a Resolution adopted by the California Regional Water Quality Control Board, North Coast Region, on July 24, 2008.

Original signed by
Catherine E. Kuhlman
Executive Officer

ATTACHMENT 1

To

RESOLUTION NO. R1-2008-0061
Approving the Santa Rosa Nutrient Offset Program for the Santa Rosa Subregional Water Reclamation System

SANTA ROSA NUTRIENT OFFSET PROGRAM

Program Framework
Key elements of the Santa Rosa Nutrient Offset Program include the following:

- **City's nutrient load to be offset**. The City would identify the anticipated total annual discharge and average total N and P concentrations to be offset when the load limit goes into effect (currently scheduled to take effect before the 2011-12 discharge season) as a basis for sizing initial nutrient control project(s). This would be calculated using the water balance model estimate of the average year recycled water discharge, which would be based on the most recent average dry weather flow estimate and average year reuse capacity at the time the estimate is complete. The actual load would be calculated using the actual discharge volume and the average nutrient concentration during discharge periods. The actual load would be used as described below to determine compliance with the no net loading provision.

- **Nutrient reduction credits to be gained by performance of selected removal/reduction actions**. The nutrient reduction quantity from removal/reduction actions implemented by the City to control source of nutrients to the Laguna other than its recycled water discharge shall be calculated using one of the two following approaches:

  - Direct measurement of nutrient reduction. The City shall receive 1 pound of nutrient reduction credit for each pound of nutrient reduced that would have been discharged to the Laguna de Santa Rosa resulting from nutrient removal/reduction actions amenable to direct measurement. A plan for measuring or estimating the nutrient quantity control would be proposed for each nutrient control project as described in the *Program Implementation* section below.

  - Estimated nutrient reduction. The effectiveness of some nutrient removal/ reduction actions are not amenable to direct measurement. For nutrient removal/reduction actions not amenable to direct measurement, the City shall receive nutrient reduction credit calculated based on the median effectiveness estimate in literature or other lines of study or evidence for project most similar to the City's proposed actions. For example, if literature values from relevant studies indicate a particular pasture management method reduces nutrient loss

by 9, 10, 12, 20, and 25 percent respectively (as reported in five studies), the City would calculate and receive nutrient reduction credit using the 12 percent value.

- Margin of Safety. All project proposals shall include a technically supportable Margin of Safety (MOS) to address uncertainties associated with nutrient reduction ratios and to ensure that the project will result in demonstrable water quality benefits. In reviewing direct and estimated nutrient reduction ratios for each proposal, the Executive Officer shall have discretion to request modification of the ratio based on the characteristics of a given proposal.

- Storm water management projects. No nutrient reduction project will overlap with best management practice activities required by the NPDES permit for the City's municipal separate storm water system ("MS4 Permit"). Under the Nutrient Offset Program, the Executive Officer shall not approve project proposals for storm water best management practice activities that are required by the City's current MS4 Permit (Order No. R1-2003-0062, NPDES Permit CA0025054) or the renewed MS4 Permit (scheduled for adoption in late 2008).

- **Nutrient reduction credit accounting**. Compliance with the no net loading requirement shall be calculated using a three-year averaging period. Each year the City will strive to offset the full amount of each year's anticipated discharge and will implement the approved projects as described in the annual report. At the end of each year, the City shall subtract the nutrient load reduction (pounds) from the City's actual nutrient discharge load, and may average the difference in the past three years. The City shall be deemed in compliance if the City has offset the full amount of actual discharge for the three year period if the three-year average difference is less than or equal to zero mass units.

- The no net nutrient loading requirement is scheduled to take effect at the beginning of the 2011-2012 discharge seasons. The City may choose to implement nutrient removal/reduction actions prior to the 2011-2012 discharge season. Credit (in pounds) for any nutrient removal/reduction actions implemented after 2007 and prior to the 2011-2012 discharge season shall be available to apply to the City's first three years of nutrient reduction. Any "banked" credits shall be distributed in a balanced manner so that water quality benefits from the Program are maximized. Factors to consider in this regard include the proportion of credits to new or ongoing projects in any given year, and the spatial temporal qualities of each credit. This issue will be considered when reviewing the nutrient reduction ratio of a given project and/or the City's annual report describing how the City plans to offset its anticipated discharge.

- The City may need to invest in capital facilities to comply with the no net nutrient loading requirement. Load reduction benefits from any such long-term capital facilities will continue to accrue to the City for the full life of such capital facilities until or unless additional regulatory controls are imposed by the RWQCB (for example, waste discharge requirements, waiver of waste discharge requirements, NPDES permit requirements, or 401 certifications) to control the same nutrient discharges the capital facilities are designed to control.

Program Implementation
Program implementation would occur according to the following steps:

1. City identifies nutrient reduction project(s)
2. City submits description of nutrient reduction project(s) to RWQCB documenting consistency with adopted Santa Rosa Nutrient Offset Program
3. RWQCB accepts proposed nutrient reduction project(s)
4. City implements project(s)
5. City submits annual report documenting nutrient discharged and controlled

Each step is described below.

1. *City identifies nutrient reduction project(s)*

   The City shall preliminarily estimate the mass of N and P that could be removed or prevented from discharging to the Laguna and its tributaries as needed to achieve no net loading (*i.e.* an amount equal to the annual N and P mass emission from the Laguna Plant).

   After assessing the options, the City shall identify one or more preferred nutrient reduction projects for implementation. The City would contact other parties (*e.g.* land owners, RCD, etc.) with which the City would need to partner to implement the project(s) to determine interest, cost and feasibility.

2. *City submits description of nutrient reduction project(s) to RWQCB*

   The City shall prepare a description of the project(s) identified in step 1 above that includes the following:

   - Project location
   - Description of N and P control facilities or practices
   - Quantity of N and P removed or controlled to be calculated as described in the *Program Framework* section above.
   - Expected life of facility or duration of practice. This description shall include a description of the facility and/or practice, plus any written agreements related to construction and maintenance of the facility or implementation of the practice.
   - Monitoring and reporting plan to document continued N and P removal. N and P removal shall be measured or estimated according to the type of removal/reduction actions identified in the *Nutrient reduction credits to be gained by performance of selected removal/reduction actions* section above.
   - Description of anticipated or actual CEQA documentation.

3. *RWQCB accepts proposed nutrient reduction project(s)*

   The Executive Officer of the RWQCB shall accept or reject the nutrient reduction project(s) submitted by the City in writing within 60 days of submittal or the project(s) are deemed accepted. The actual load reduction shall be determined according to the monitoring and reporting plan. The Executive Officer shall provide notice and the opportunity for the public to comment on the project(s). After consideration of any public comments and all available information, the Executive Officer may suggest modifications to the project(s) as necessary for acceptance. The Executive Officer of the RQWCB shall maintain discretion over accepted projects to request reasonable modifications based upon significant new information.

4. *City implements load reduction project(s) as proposed and accepted*

   The City, with any partners, shall implement the nutrient reduction project(s) as proposed and accepted.

5. *City submits annual report documenting nutrient discharged and controlled*

   Beginning in 2011, by July 1st each year, the City shall provide a report to RWQCB documenting the following:

   - Mass of N and P anticipated to be discharged to the Laguna de Santa Rosa (and tributaries) for the upcoming discharge season and a description of how the City plans to offset the anticipated discharge.
   - Mass of N and P actually discharged to the Laguna de Santa Rosa (and tributaries) during the previous discharge season, and the two prior discharge seasons if applicable.
   - Mass of N and P controlled during the previous twelve months (i.e., July 1st through June 30th, of the previous twelve months), and the two (2) prior twelve month periods years if applicable.
   - Calculation of the two and three year averaging, if applicable.
   - Detailed report for each of the accepted nutrient reduction projects according to projects' respective monitoring and reporting plan.
   - The report shall be signed and certified in accordance with 40 CFR 122.22(d).

   The annual report will be posted on the RWQCB website. A RWQCB staff contact will be listed for any questions or comments regarding the report.

Exhibit 1 below is an example where the City would be in compliance in all years (i.e., the Three-Year Average" value is less than 0 kg). The example in Exhibit 1 demonstrates that compliance with the requirement of the 0 kg three-year average requirement is achieved in 2013-14 by using some of the pre-2011 credit.

EXHIBIT 1

To

SANTA ROSA NUTRIENT OFFSET PROGRAM

	Kg Phosphorus					
	Pre-2011	2011-12	2012-13	2013-14	2014-15	2015-16
Anticipated City Discharge		4824	5400	5977	6554	7131
Actual City Discharge		4968	5238	7113	6030	8129
Control Project 1		3900	3950	3610	3290	4580
Control Project 2		900	1200	1200	1200	1200
Control Project 3			100	2000	2000	2200
Control Project 4						
Total Control		4800	5250	6810	6490	7980
Net Load		168	-12	303	-460	149
Pre-2011 credit available	500	500	332	332	0	0
Pre-2011 credit used		168	0	303		
Annual Load For Compliance		0	-12	0	-460	149
Three-Year Average				-4	-157	-104