California Regional Water Quality Control Board

Linda S. Adams
Secretary for
Environmental Protection

San Francisco Bay Region
1515 Clay Street, Suite 1400
(510) 622-2300 • Fax (510) 622-2460
http://www.waterboards.ca.gov/sanfranciscobay

Arnold Schwarzenegger
Governor

ORDER NO. R2-2008-0008

NPDES NO. CA0037788

The following Discharger is authorized to discharge in accordance with conditions set forth in this Order:

Discharger Information

Discharger	City of Burlingame and North Bayside System Unit
Name of Facility	City of Burlingame Wastewater Treatment Facility
Facility Address	1103 Airport Boulevard
	Burlingame, CA 94010
	San Mateo County

The Discharge by the City of Burlingame Wastewater Treatment Facility (Facility) from the discharge point identified below is subject to waste discharge requirements as set forth in this Order.

Discharge Location

Discharge Points	Effluent Description	Discharge Point Latitude	Discharge Point Longitude	Receiving Water
E-002	Secondary treated wastewater	37º, 39', 55" N	122º, 21', 41" W	Lower San Francisco Bay

Administrative Information

This Order was adopted by the Regional Water Board on:	**January 30, 2008**
This Order shall become effective on:	**April 1, 2008**
This Order shall expire on:	**March 31, 2013**
The Discharger shall file a Report of Waste Discharge in accordance with Title 23, California Code of Regulations, as application for issuance of new waste discharge requirements no later than:	**180 days prior to the Order expiration date**
The U.S. Environmental Protection Agency (USEPA) and the Regional Water Quality Control Board have classified this discharge as a major discharge.	

I, Bruce H. Wolfe, Executive Officer, do hereby certify the following is a full, true, and correct copy of an Order adopted by the California Regional Water Quality Control Board, San Francisco Bay Region, on **January 30, 2008**.

Digitally signed by Bruce Wolfe
Date: 2008.02.06 21:46:03 -08'00'

Bruce H. Wolfe, Executive Officer

Table of Contents

I. Facility Information 1
II. Findings 1
III. Discharge Prohibitions 7
IV. Effluent Limitations and Discharge Specifications 8
A. Effluent Limitations for Conventional and Non-Conventional Pollutants at Monitoring Location E-001 8
B. Effluent Limitations at Discharge Point E-002 8
C. Additional Effluent Limits at Monitoring Location E-001 9
D. Final Effluent Limitations for Toxic Substances 9
E. Whole Effluent Acute Toxicity 10
F. Whole Effluent Chronic Toxicity 11
G. Reclamation Specifications 12
V. Receiving Water Limitations 12
A. Surface Water Limitations 12
B. Groundwater Limitations 13
VI. Provisions 13
A. Standard Provisions 13
B. Monitoring and Reporting Program Requirements 13
C. Special Provisions 13
1. Reopener Provisions 13
2. Special Studies, Technical Reports and Additional Monitoring Requirements 14
3. Best Management Practices and Pollutant Minimization Program 15
4. Construction, Operation and Maintenance Specifications 17
5. Special Provisions for POTWs 19
6. Corrective Measures to Eliminate Use of the Nearshore Outfall 21
7. Corrective Measures to Minimize Blending 22
8. Dioxin-TEQ Compliance Schedule 23
9. Action Plan for Cyanide 24
10. Action Plan for Copper 24
VII. Compliance Determination 24
A. General 24
B. Multiple Sample Data 24

List of Tables

Table 1. Facility Information 1
Table 2. Basin Plan Beneficial Uses of Lower San Francisco Bay 4
Table 3. Effluent Limitations for Conventional and Non-Conventional Pollutants 8
Table 4. Effluent Limitations for Discharge Point E-002 8
Table 5. Final Effluent Limitations for Toxic Substances 9

List of Attachments

Attachment A – Definitions A-1
Attachment B – Topographic Map B-1
Attachment C – Process Flow Diagram C-1
Attachment D – Federal Standard Provisions D-1

Attachment E – Monitoring and Reporting Program (MRP) E-1
Attachment F - Fact Sheet F-1
Attachment G – The following documents are part of this Permit, but are not physically attached due to volume. They are available on the internet at www.waterboards.ca.gov/sanfranciscobay/

- Standard Provisions and Reporting Requirements, August 1993
- August 6, 2001 Staff Letter: Requirement for Priority Pollutant Monitoring in Receiving Water and Wastewater Discharges
- Self-Monitoring Program, Part A, adopted August 1993

Attachment H – Pretreatment Requirements

I. FACILITY INFORMATION

The following Discharger is subject to the waste discharge requirements as set forth in this Order.

Table 1. Facility Information

Discharger	City of Burlingame and North Bayside System Unit
Name of Facility	City of Burlingame Wastewater Treatment Facility
Facility Address	1103 Airport Boulevard
	Burlingame, CA 94010
	San Mateo County
Facility Contact, Title, and Phone	William Toci, Plant Manager, (650) 342-3727
Mailing Address	501 Primrose Road Burlingame, CA 94010
Type of Facility	Publicly Owned Treatment Works (POTW)
Facility Design Flow	5.5 mgd (dry weather) and 16 mgd (wet weather capacity)

II. FINDINGS

The California Regional Water Quality Control Board, San Francisco Bay Region (hereinafter Regional Water Board), finds:

A. Background. The City of Burlingame Wastewater Treatment Facility (Facility) and the North Bayside System Unit (NBSU) (hereinafter, the Discharger) are currently discharging under Order No. R2-2002-0027 and National Pollutant Discharge Elimination System (NPDES) Permit No. CA0037788. The NBSU is subject to the requirements of this Order because it is responsible for chlorination and dechlorination of the effluent prior to discharge to Lower San Francisco Bay.

The Discharger submitted a Report of Waste Discharge, dated May 24, 2006, and applied for renewal of its NPDES permit to discharge up to 5.5 million gallons per day (mgd) of treated wastewater from the Facility. The application was deemed complete on June 16, 2006.

For the purposes of this Order, references to the “discharger” or “permittee” in applicable federal and state laws, regulations, plans, or policy are held to be equivalent to references to the Discharger herein.

B. Facility Description

1. The Discharger owns, and Veolia West Operating Service, Inc. operates, the Facility, which provides secondary treatment of domestic and commercial wastewater collected from the cities of Burlingame (population 30,000) and Hillsborough (6,000), and unincorporated areas of San Mateo County (1,000). The Facility has an average dry weather design flow capacity of 5.5 million gallons per day (mgd) and can treat up to 16 mgd during the wet weather flow period. A topographic map of the area around the Facility is provided as **Attachment B** of this Order.

2. The Facility is part of the NBSU, a joint powers authority that includes the cities of Burlingame, Millbrae, South San Francisco, and San Bruno, and the San Francisco International Airport.

3. The wastewater treatment process at the Facility consists of screening, grit removal, primary clarification (2 primary clarifiers), activated sludge biological treatment (4 aeration basins), secondary clarification (4 secondary clarifiers), and disinfection with sodium hypochlorite. During wet weather operations, the aeration basins and secondary clarifiers may be bypassed, with the final effluent being a blend of disinfected, primary-treated effluent and disinfected, secondary-treated effluent. Blending is done to avoid hydraulic overload of the activated sludge process and associated solids inventory washout. The Facility presently discharges an average dry weather flow of 3.56 mgd, an annual average flow of 4.3 mgd, and a maximum wet weather flow rate of 11 mgd (2004-2006 data).

4. Treated, disinfected wastewater enters the NBSU forcemain at monitoring location E-001, dechlorinated at the City of South San Francisco Water Quality Control Plant prior to discharge from the NBSU force main and outfall into Lower San Francisco Bay (E-002), a water of the State and the United States, northeast of Point San Bruno through a submerged diffuser about 5,300 feet offshore at a depth of 20 feet below mean lower low water (37 degrees, 39 minutes, 55 seconds N latitude and 122 degrees, 21 minutes, 41 seconds W longitude). The engineered maximum instantaneous outfall flow rate the Facility is allowed to discharge to the NBSU force main is 16 mgd. Effluent flows in excess of 16 mgd are diverted to a nearshore outfall; which is prohibited by this Order. Consistent with Basin Plan requirements, discharge through any outfall other than E-002 is prohibited by this Order. The location of the NBSU discharge point is shown in **Attachment B (Figure B-2)**. A flow schematic of the facility is provided as **Attachment C** of this Order.

5. Biosolids collected from the wastewater treatment process are thickened in a gravity thickener, anaerobically digested and stabilized in an anaerobic digester, and dewatered by a belt filter press. The Discharger currently generates about 665 dry metric tons per year of Class B biosolids. A portion of the dewatered biosolids is disposed of at the Potrero Hills Landfill in Suisun City, California. The Discharger contracts through its agent, Veolia West Operating Service Inc., to have the remaining dewatered biosolids hauled and land applied by SynaGro West, Inc., its contract land applier. Under the terms of that contract, SynaGro is responsible for complying with the monitoring and reporting requirements of the 40 CFR 503 regulations for the biosolids and files annual reports with USEPA Region IX.

C. Legal Authorities. This Order is issued pursuant to CWA Section 402 and implementing regulations adopted by the USEPA and Chapters 5.5, Division 7 of the CWC (commencing with section 13370). It shall serve as an NPDES permit for point source discharges from this Facility to surface waters. This Order also serves as Waste Discharge Requirements (WDRs) pursuant to Article 4, Chapter 4 Division 7 of the CWC (commencing with section 13260).

D. Background and Rationale for Requirements. The Regional Water Board developed the requirements in this Order based on information submitted as part of the application, through monitoring and reporting programs, and other available information. The Fact Sheet (Attachment F), which contains background information and rationale for Order requirements, is hereby incorporated into this Order and constitutes part of the Findings for this Order. Attachments A through E, G and H are also incorporated into this Order.

E. California Environmental Quality Act (CEQA). Under Water Code section 13389, this action to adopt an NPDES permit is exempt from the provisions of CEQA.

F. Technology-based Effluent Limitations. NPDES regulations at 40 CFR 122.44(a) require that permits include applicable technology-based requirements at a minimum and any more stringent effluent limitations necessary to meet applicable water quality standards. This Order includes technology-based effluent limitations based on Secondary Treatment Standards at 40 CFR Part 133 and Best Professional Judgment (BPJ) pursuant to 40 CFR 125.3. The Regional Water Board has considered the factors associated with these requirements when developing all effluent limitations. A detailed discussion of development of the technology-based effluent limitations development is included in the Fact Sheet (**Attachment F**).

G. Water Quality-based Effluent Limitations. NPDES regulations at 40 CFR 122.44(d)(1)(i) mandate that permits include effluent limitations for all pollutants that are or may be discharged at levels that have the reasonable potential to cause or contribute to an exceedance of a water quality standard, including numeric and narrative objectives within a standard. Where reasonable potential has been established for a pollutant, but there is no numeric criterion or objective for the pollutant, water quality-based effluent limitations (WQBELs) are established using: (1) USEPA criteria guidance under CWA section 304(a), supplemented where necessary by other relevant information; (2) an indicator parameter for the pollutant of concern; or (3) a calculated numeric water quality criterion, such as a proposed state criterion or policy interpreting the state's narrative criterion, supplemented with other relevant information, as provided in 40 CFR 122.44(d)(1)(vi).

H. Water Quality Control Plans. *The Water Quality Control Plan for the San Francisco Bay Basin* (Basin Plan) is the Regional Water Board's master water quality control planning document. It designates beneficial uses and water quality objectives for waters of the State, including surface waters and groundwater. It also includes programs of implementation to achieve water quality objectives. The Basin Plan was duly adopted by the Regional Water Board and approved by the State Water Resources Control Board, USEPA, and the Office of Administrative Law, as required. The Basin Plan implements State Water Resources Control Board (State Water Board) Resolution No. 88-63, which establishes State policy that all waters, with certain exceptions, should be considered suitable or potentially suitable for municipal or domestic supply (MUN). Because of the marine influence on receiving waters of the San Francisco Bay, total dissolved solids levels in the Bay commonly (and often significantly) exceed 3,000 mg/L and thereby meet an exception to State Water Board Resolution No. 88-63. Therefore, the MUN designation is not applicable to the Lower San Francisco Bay. Beneficial uses applicable to Lower San Francisco Bay are as follows.

Table 2. Basin Plan Beneficial Uses of Lower San Francisco Bay

Discharge Point	Receiving Water Name	Beneficial Uses
E-002	Lower San Francisco Bay	Industrial Service Supply (IND) Navigation (NAV) Water Contact Recreation (REC1) Non-Contact Water Recreation (REC2) Ocean, Commercial and Sport Fishing (COMM) Wildlife Habitat (WILD) Preservation of Rare and Endangered Species (RARE) Fish Migration (MIGR) Shellfish Harvesting (SHELL) Estuarine Habitat (EST)

Requirements of this Order implement the Basin Plan.

I. **National Toxics Rule (NTR) and California Toxics Rule (CTR).** USEPA adopted the NTR on December 22, 1992, and later amended it on May 4, 1995, and November 9, 1999. About forty criteria in the NTR applied in California. On May 18, 2000, USEPA adopted the CTR. The CTR promulgated new toxics criteria for California and, in addition, incorporated the previously adopted NTR criteria that were applicable in the State. The CTR was amended on February 13, 2001. These rules contain water quality criteria for priority pollutants.

J. **State Implementation Policy.** On March 2, 2000, the State Water Board adopted the *Policy for Implementation of Toxics Standards for Inland Surface Waters, Enclosed Bays, and Estuaries of California* (State Implementation Policy or SIP). The SIP became effective on April 28, 2000 with respect to the priority pollutant criteria promulgated for California by the USEPA through the NTR and to the priority pollutant objectives established by the Regional Water Board in the Basin Plan. The SIP became effective on May 18, 2000 with respect to the priority pollutant criteria promulgated by the USEPA through the CTR. The State Water Board adopted amendments to the SIP on February 24, 2005 that became effective on July 13, 2005. The SIP establishes implementation provisions for priority pollutant criteria and objectives and provisions for chronic toxicity control. Requirements of this Order implement the SIP.

K. **Compliance Schedules and Interim Requirements.** Section 2.1 of the SIP provides that, based on a discharger's request and demonstration that it is infeasible for an existing discharger to achieve immediate compliance with an effluent limitation derived from a CTR criterion, compliance schedules may be allowed in an NPDES permit. Unless an exception has been granted under section 5.3 of the SIP, a compliance schedule may not exceed 5 years from the date that the permit is issued or reissued, nor may it extend beyond 10 years from the effective date of the SIP (or May 18, 2010) to establish and comply with CTR criterion-based effluent limitations. Where a compliance schedule for a final effluent limitation exceeds 1 year, the Order must include interim numeric limitations for that constituent or parameter. Where allowed by the Basin Plan, compliance schedules and interim effluent limitations or discharge specifications may also be granted to allow time to implement a new or revised water quality objective. This Order includes a compliance schedule for dioxin-TEQ, but does not include interim effluent limitations for dioxins due to data limitations.

L. Alaska Rule. On March 30, 2000, USEPA revised its regulation that specifies when new and revised state and tribal water quality standards become effective for CWA purposes. [65 Fed. Reg. 24641 (April 27, 2000) (codified at 40 CFR 131.21)]. Under the revised regulation (also known as the Alaska Rule), new and revised standards submitted to USEPA after May 30, 2000, must be approved by USEPA before being used for CWA purposes. The final rule also provides that standards already in effect and submitted to USEPA by May 30, 2000 may be used for CWA purposes, whether or not approved by USEPA.

M. Stringency of Requirements for Individual Pollutants. This Order contains restrictions on individual pollutants that are no more stringent than required by the federal CWA. Individual pollutant restrictions consist of technology-based restrictions and water quality-based effluent limitations. The technology-based effluent limitations consist of restrictions on carbonaceous biochemical oxygen demand (BOD), total suspended solids (TSS), pH, turbidity, and oil and grease. Restrictions on these pollutants are specified in federal regulations as discussed in Section III.C.5 of the Fact Sheet (**Attachment F**). Water quality-based effluent limitations have been scientifically derived to implement water quality objectives that protect beneficial uses. Both the beneficial uses and the water quality objectives have been approved pursuant to federal law and are the applicable federal water quality standards. To the extent that toxic pollutant water quality-based effluent limitations were derived from the CTR, the CTR is the applicable standard pursuant to 40 CFR 131.38. The scientific procedures for calculating the individual water quality-based effluent limitations are based on the CTR-SIP, which was approved by USEPA on May 18, 2000. All beneficial uses and water quality objectives contained in the Basin Plan were approved under state law and submitted to and approved by USEPA prior to May 30, 2000. Any water quality objectives and beneficial uses submitted to USEPA prior to May 30, 2000, but not approved by USEPA before that date, are nonetheless "applicable water quality standards for purposes of the CWA" pursuant to 40 CFR 131.21(c)(1). Collectively, this Order's restrictions on individual pollutants are no more stringent than required to implement the technology-based requirements of the CWA and the applicable water quality standards for purposes of the CWA.

N. Antidegradation Policy. 40 CFR 131.12 requires that the state water quality standards include an antidegradation policy consistent with the federal policy. The State Water Board established California's antidegradation policy in State Water Board Resolution No. 68-16. Resolution No. 68-16 incorporates the federal antidegradation policy where the federal policy applies under federal law. Resolution No. 68-16 requires that existing quality of waters be maintained unless degradation is justified based on specific findings. The Basin Plan implements, and incorporates by reference, both the state and federal antidegradation policies. As discussed in detail in the Fact Sheet (**Attachment F**), the permitted discharge is consistent with the antidegradation provisions of 40 CFR 131.12 and State Water Board Resolution No. 68-16.

O. Anti-Backsliding Requirements. CWA Sections 402(o)(2) and 303(d)(4) and NPDES regulations at 40 CFR 122.44(l) prohibit backsliding in NPDES permits. These anti-backsliding provisions require effluent limitations in a reissued permit to be as stringent as those in the previous Order, with some exceptions where limitations may be relaxed. All

effluent limitations in this Order are at least as stringent as the effluent limitations in the previous Order.

P. Monitoring and Reporting. 40 CFR 122.48 requires that all NPDES permits specify requirements for recording and reporting monitoring results. Water Code sections 13267 and 13383 authorize the Regional Water Board to require technical and monitoring reports. The Monitoring and Reporting Program establishes monitoring and reporting requirements to implement federal and State requirements. This Monitoring and Reporting Program is provided in Attachment E.

Q. Standard and Special Provisions. Standard Provisions, which apply to all NPDES permits in accordance with 40 CFR 122.41, and additional conditions applicable to specified categories of permits in accordance with 40 CFR 122.42, are provided in Attachment D. The Discharger must comply with all standard provisions and with those additional conditions that are applicable under 40 CFR 122.42. The Regional Water Board has also included in this Order special provisions applicable to the Discharger. A rationale for the special provisions contained in this Order is provided in **Attachment F**.

R. Provisions and Requirements Implementing State Law. The provisions/requirements in subsections IV.F and V.B of this Order are included to implement State law only. These provisions/requirements are not required or authorized under the federal CWA; consequently, violations of these provisions/requirements are not subject to the enforcement remedies that are available for NPDES violations.

S. Notification of Interested Parties. The Regional Water Board has notified the Discharger and interested agencies and persons of its intent to prescribe Waste Discharge Requirements for the discharge and has provided them with an opportunity to submit their written comments and recommendations. Details of notification are provided in the Fact Sheet (**Attachment F)** of this Order.

T. Consideration of Public Comment. The Regional Water Board, in a public meeting, heard and considered all comments pertaining to the discharge. Details of the Public Hearing are provided in the Fact Sheet (**Attachment F)** of this Order.

IT IS HEREBY ORDERED, that Order No. R2-2002-0027 is rescinded upon the effective date of this Order except for enforcement purposes, and, in order to meet the provisions contained in Division 7 of the California Water Code (CWC) and regulations adopted thereunder, and the provisions of the federal Clean Water Act (CWA) and regulations and guidelines adopted thereunder, the Discharger shall comply with the requirements in this Order.

III. DISCHARGE PROHIBITIONS

A. Discharge of treated wastewater at a location or in a manner different from that described in this Order is prohibited.

B. The average dry weather flow, as measured at monitoring location E-001 described in the attached MRP (Attachment E), shall not exceed 5.5 mgd. The average dry weather flow shall be determined for compliance with this prohibition over three consecutive dry weather months each year.

C. Discharge of treated wastewater into Lower San Francisco Bay, at any point where it does not receive an initial dilution of at least 10:1, is prohibited.

D. The bypass or overflow of untreated or partially treated wastewater to waters of the United States is prohibited, except as provided for in the conditions stated in 40 CFR 122.41(m)(4) and in A.13 of the *Standard Provisions and Reporting Requirements for NPDES Surface Water Discharge Permits, August 1993* **(Attachment G)**.

Blended wastewater is biologically treated wastewater blended with primary treated wastewater that has been diverted around biological treatment units or advanced treatment units. Such discharges are approved (1) when the Discharger's peak wet weather influent flow volumes exceed the capacity of the secondary treatment unit(s) of 13 mgd, and (2) the discharge complies with the effluent and receiving water limitations contained in this Order, and (3) the Discharger is in compliance Provision VI.C.5.c. Furthermore, the Discharger shall operate its facility as designed and in accordance with the Operation & Maintenance Manual developed for the facility. This means that it shall optimize storage and use of equalization units, and shall fully utilize the biological treatment units and advanced treatment units, if applicable. The Discharger shall report incidents of blended effluent discharges in routine monitoring reports, and shall conduct monitoring of this discharge as specified in the attached MRP (**Attachment E**).

E. Any sanitary sewer overflow that results in a discharge of untreated or partially treated wastewater to waters of the United States is prohibited.

IV. EFFLUENT LIMITATIONS AND DISCHARGE SPECIFICATIONS

A. Effluent Limitations for Conventional and Non-Conventional Pollutants at Monitoring Location E-001

The Discharger shall maintain compliance with the following effluent limitations at Monitoring Location E-001 as described in the attached MRP (**Attachment E**).

Table 3. Effluent Limitations for Conventional and Non-Conventional Pollutants

Parameter	Units	Effluent Limitations				
		Average Monthly	Average Weekly	Maximum Daily	Instantaneous Minimum	Instantaneous Maximum
Oil and Grease	mg/L	10	---	20	---	---
pH [(1)]	standard units	---	---	---	6.0	9.0
Total Suspended Solids (TSS)	mg/L	30	45	---	---	---
Biochemical Oxygen Demand (BOD 5-day @ 20 Deg. C)	mg/L	30	45	---	---	---

(1) If the Discharger monitors pH continuously, pursuant to 40 CFR 401.17, the Discharger shall be in compliance with the pH limitation specified herein, provided that both of the following conditions are satisfied: (i) the total time during which the pH values are outside the required range of pH values shall not exceed 7 hours and 26 minutes in any calendar month; and (ii) no individual excursion from the range of pH values shall exceed 60 minutes.

B. Effluent Limitations at Discharge Point E-002

The Discharger shall maintain compliance with the following effluent limitations at Discharge Point E-002 with compliance measured at Monitoring Location E-002 as described in the attached MRP (**Attachment E**).

Table 4. Effluent Limitations for Discharge Point E-002

Parameter	Units	Effluent Limitations				
		Average Monthly	Average Weekly	Maximum Daily	Instantaneous Minimum	Instantaneous Maximum
Chlorine, Total Residual[(1)]	mg/L	---	---	---	---	0.0
Cyanide[(2)]	µg/L	17	---	45	---	---

(1) This requirement is defined as below the limit of detection in standard test methods, as defined in the latest edition of *Standard Methods for the Examination of Water and Wastewater*. The Discharger may elect to use a continuous on-line monitoring system(s) for measuring flows, sodium hypochlorite, and sodium bisulfite dosage (including a safety factor) and concentration to prove that chlorine residual exceedances are false positives. If convincing evidence is provided, Regional Water Board staff will conclude that these false positive chlorine residual exceedances are not violations of the chlorine limit. Chlorine residual compliance shall be demonstrated by monitoring the combined discharge at the NBSU common outfall.

(2) **Alternate Effluent Limits for Cyanide:**

a. If a cyanide SSO for the receiving water becomes legally effective, resulting in an adjusted saltwater chronic criterion of 2.9 µg/l (based on the assumptions in *Draft Staff Report on Proposed Site-Specific Water Quality Objectives and Effluent Limit Policy for Cyanide for San Francisco* Bay, dated November 10, 2005), upon its effective date, the following limitation shall supersede the cyanide maximum daily limitation listed in Table 4 (the rationale for this effluent limitation can be found in the Fact Sheet [**Attachment F**]). The average monthly limit shall not be affected.

MDEL of 47 µg/L

b. If a different cyanide SSO for the receiving water is adopted, the alternate WQBELs based on the SSO will be determined after the SSO effective date.

C. Additional Effluent Limits at Monitoring Location E-001

1. **BOD and TSS 85% Percent Removal:** The average monthly percent removal of CBOD and TSS values, by concentration, shall not be less than 85 percent.

2. **Fecal Coliform Bacteria:** The treated wastewater shall meet the following limits of bacteriological quality:

   a. The geometric mean fecal coliform density based on a minimum of five consecutive samples collected within a 30-day period shall not exceed a most probable number (MPN) of 200 MPN/100ml; and

   b. The 90th percentile value of the last ten fecal coliform density values shall not exceed 400 MPN/100 ml.

3. **Enterococci Bacteria:** The monthly geometric mean enterococci bacteria density in samples of treated wastewater collected at EFF-001 shall not exceed 35 colonies/100 ml.

D. Final Effluent Limitations for Toxic Substances

The Discharger shall maintain compliance with the following effluent limitations at Monitoring Location E-001 as described in the attached MRP (**Attachment E**):

Table 5. Final Effluent Limitations for Toxic Substances

Constituent	Units	Water Quality-Based Effluent Limits (WQBELs)[1,5]	
		Average Monthly (AMEL)	Maximum Daily (MDEL)
Copper[(2)]	µg/L	69	110
Dioxin-TEQ[(3)]	µg/L	1.4×10^{-8}	2.8×10^{-8}
Total Ammonia as N[(4)]	mg/L	67	130

[(1)] a. Limitations apply to the average concentration of all samples collected during the averaging period (daily = 24-hour period; monthly = calendar month).

b. All metals limitations are expressed as total recoverable metal.

[(2)] **Alternate Effluent Limits for Copper:**

a. If a copper Site Specific Objective (SSO) for the receiving water becomes legally effective, resulting in adjusted saltwater Criterion Continuous Concentration (CCC) of 2.5 µg/l and Criterion Maximum Concentration (CMC) of 3.9 µg/l as documented in the *North of Dumbarton Bridge Copper and Nickel Site-Specific Objective (SSO) Derivation (Clean Estuary Partnership December 2004)*, upon its effective date, the following limitations shall supersede those copper limitations listed in Table 5 (the rationale for these effluent limitations can be found in the Fact Sheet [**Attachment F**]).

MDEL of 81 µg/L, and AMEL of 52 µg/L.

b. If a different copper SSO for the receiving water is adopted, the alternate WQBELs based on the SSO will be determined after the SSO effective date.

[(3)] Final effluent limits for dioxin-TEQ shall become effective on March 31, 2018.

[(4)] Compliance with the total ammonia limit shall be determined from samples of the final secondary effluent prior to disinfection.

(5) A daily maximum or average monthly value for a given constituent shall be considered noncompliant with the effluent limitations only if it exceeds the effluent limitation and the Reporting Level for that constituent. As outlined in Section 2.4.5 of the SIP, the table below indicates the Minimum Level (ML) for compliance determination purposes. In addition, in order to perform reasonable potential analysis for future permit reissuance, the Discharger shall use methods with MLs lower than the applicable water quality objectives or water quality criteria. A ML is the concentration at which the entire analytical system must give a recognizable signal and acceptable calibration point. The ML is the concentration in a sample that is equivalent to the concentration of the lowest calibration standard analyzed by a specific analytical procedure, assuming that all the method specified sample weights, volumes, and processing steps have been followed.

Constituent	Minimum Level	Units
Copper	2	µg/L
Cyanide	5	µg/L
Dioxin-TEQ	As specified below	
2,3,7,8-TetraCDD	5	pg/L
1,2,3,7,8-PentaCDD	25	pg/L
1,2,3,4,7,8-HexaCDD	25	pg/L
1,2,3,6,7,8-HexaCDD	25	pg/L
1,2,3,7,8,9-HexaCDD	25	pg/L
1,2,3,4,6,7,8-HeptaCDD	25	pg/L
OctaCDD	50	pg/L
2,3,7,8-TetraCDF	5	pg/L
1,2,3,7,8-PentaCDF	25	pg/L
2,3,4,7,8-PentaCDF	25	pg/L
1,2,3,4,7,8-HexaCDF	25	pg/L
1,2,3,6,7,8-HexaCDF	25	pg/L
1,2,3,7,8,9-HexaCDF	25	pg/L
2,3,4,6,7,8-HexaCDF	25	pg/L
1,2,3,4,6,7,8-HeptaCDF	25	pg/L
1,2,3,4,7,8,9-HeptaCDF	25	pg/L
OctaCDF	50	pg/L

E. Whole Effluent Acute Toxicity

1. Representative samples of the final secondary effluent prior to disinfection shall meet the following limits for acute toxicity: Bioassays shall be conducted in compliance with Section V.A of the Monitoring and Reporting Program (MRP, **Attachment E**).

   The survival of organisms in undiluted combined effluent shall be an eleven (11) sample median value of not less than 90 percent survival, and an eleven (11) sample 90 percentile value of not less than 70 percent survival.

2. These acute toxicity limitations are further defined as follows:

   11 sample median: A bioassay test showing survival of less than 90 percent represents a violation of this effluent limit, if five or more of the past ten or less bioassay tests show less than 90 percent survival.

90th percentile: A bioassay test showing survival of less than 70 percent represents a violation of this effluent limit, if one or more of the past ten or less bioassay tests show less than 70 percent survival.

3. Bioassays shall be performed using the most up-to-date USEPA protocol and the most sensitive species as specified in writing by the Executive Officer based on the most recent screening test results. Bioassays shall be conducted in compliance with "Methods for Measuring the Acute Toxicity of Effluents and Receiving Water to Freshwater and Marine Organisms," currently 5th Edition (EPA-821-R-02-012), with exceptions granted to the Discharger by the Executive Officer and the Environmental Laboratory Accreditation Program (ELAP) upon the Discharger's request with justification.

4. If the Discharger can demonstrate to the satisfaction of the Executive Officer that toxicity exceeding the levels cited above is caused by ammonia and that the ammonia in the discharge is not adversely impacting receiving water quality or beneficial uses, then such toxicity does not constitute a violation of this effluent limitation.

F. Whole Effluent Chronic Toxicity

1. Compliance with the Basin Plan narrative chronic toxicity objective shall be demonstrated according to the following tiered requirements based on results from representative samples of the final secondary effluent prior to disinfection meeting test acceptability criteria and Section V.B of the MRP (**Attachment E**). Failure to conduct the required toxicity tests or a toxicity reduction evaluation (TRE) within a designated period shall result in the establishment of effluent limitations for chronic toxicity.

   a. Conduct routine monitoring.

   b. Accelerate monitoring after exceeding a three-sample median of 10 chronic toxicity units (TUc) or a single-sample maximum of 20 TUc, consistent with Table 4-5 of the Basin Plan for dischargers monitoring chronic toxicity quarterly. Accelerated monitoring shall consist of monthly monitoring.

   c. Return to routine monitoring if accelerated monitoring does not exceed the "trigger" in (2), above.

   d. If accelerated monitoring confirms consistent toxicity above either "trigger" in (2), above, initiate toxicity identification evaluation/toxicity reduction evaluation (TIE/TRE) in accordance with a workplan submitted in accordance with Section V.B.3 of the MRP (Attachment E), and that incorporates any and all comments from the Executive Officer.

   e. Return to routine monitoring after appropriate elements of TRE workplan are implemented and either the toxicity drops below "trigger" levels in (2), above, or, based on the results of the TRE, the Executive Officer authorizes a return to routine monitoring.

2. Test Species and Methods

   The Discharger shall conduct routine monitoring with the test species and protocols specified in Section V.B of the MRP (Attachment E). The Discharger shall also perform Chronic Toxicity Screening Phase monitoring as described in Appendix E-1 of the MRP (**Attachment E**). Chronic Toxicity Monitoring Screening Phase Requirements, Critical Life Stage Toxicity Tests and definitions of terms used in the chronic toxicity monitoring are identified in Appendices E-1 and E-2 of the MRP (**Attachment E**).

G. Reclamation Specifications

Not Applicable.

V. RECEIVING WATER LIMITATIONS

A. Surface Water Limitations

1. Receiving water limitations are based on water quality objectives contained in the Basin Plan and are a required part of this Order. The discharges shall not cause the following in Lower San Francisco Bay:

   a. Floating, suspended, or deposited macroscopic particulate matter or foams;

   b. Bottom deposits or aquatic growths to the extent that such deposits or growths cause nuisance or adversely affect beneficial uses;

   c. Alteration of temperature, turbidity, or apparent color beyond present natural background levels;

   d. Visible, floating, suspended, or deposited oil and other products of petroleum origin; or

   e. Toxic or other deleterious substances to be present in concentrations or quantities which will cause deleterious effects on wildlife, waterfowl, or other aquatic biota, or which render any of these unfit for human consumption, either at levels created in the receiving waters or as a result of biological concentration.

2. The discharge of waste shall not cause the following limits to be exceeded in waters of the State within one foot of the water surface:

   a. Dissolved Oxygen: 5.0 mg/L, minimum

      The median dissolved oxygen concentration for any three consecutive months shall not be less than 80% of the dissolved oxygen content at saturation. When natural factors cause concentrations less than that specified above, the discharge shall not cause further reduction in ambient dissolved oxygen concentrations.

   b. Dissolved Sulfide: Natural background levels (0.1 mg/L, maximum)

c. pH: Within 6.5 and 8.5

d. Nutrients: Waters shall not contain biostimulatory substances in concentrations that promote aquatic growths to the extent that such growths cause nuisance or adversely affect beneficial uses.

B. Groundwater Limitations

Not Applicable.

VI. PROVISIONS

A. Standard Provisions

1. The Discharger shall comply with Standard Provisions included in **Attachment D** of this Order.

2. The Discharger shall comply with all applicable items of the *Standard Provisions and Reporting Requirements for NPDES Surface Water Discharge Permits, August 1993* **(Attachment G),** including any amendments thereto. Where provisions or reporting requirements specified in this Order are different from equivalent or related provisions or reporting requirements given in the Standard Provisions, the specifications of this Order shall apply. Duplicative requirements in the federal Standard Provisions in VI.A.1.2, above (**Attachment D**) and the regional Standard Provisions (**Attachment G**) are not separate requirements. A violation of a duplicative requirement does not constitute two separate violations.

B. Monitoring and Reporting Program Requirements

The Discharger shall comply with the MRP, and future revisions thereto, in Attachment E of this Order. The Discharger shall also comply with the requirements contained in *Self Monitoring Programs, Part A*, August 1993 (**Attachment G**).

C. Special Provisions

1. Reopener Provisions

The Regional Water Board may modify or reopen this Order prior to its expiration date in any of the following circumstances as allowed by law:

a. If present or future investigations demonstrate that the discharge(s) governed by this Order will or have a reasonable potential to cause or contribute to, or will cease to, have adverse impacts on water quality and/or beneficial uses of the receiving waters.

b. If new or revised WQOs, or TMDLs come into effect for the San Francisco Bay estuary and contiguous water bodies (whether statewide, regional, or site-specific). In such cases, effluent limitations in this Order will be modified as necessary to reflect updated WQOs and waste load allocations in TMDLs. Adoption of effluent limitations contained in this Order is not intended to restrict in

any way future modifications based on legally adopted WQOs, TMDLs, or as otherwise permitted under Federal regulations governing NPDES permit modifications.

c. If the mercury watershed permit has not become effective by the effective date of this order.

d. If translator or other water quality studies provide a basis for determining that a permit condition(s) should be modified.

e. If administrative or judicial decision on a separate NPDES permit or WDR that addresses requirements similar to this discharge.

f. Or as otherwise authorized by law.

The Discharger may request permit modification based on the above. The Discharger shall include in any such request an antidegradation and antibacksliding analysis.

2. Special Studies, Technical Reports and Additional Monitoring Requirements

a. Effluent Characterization for Selected Constituents

The Discharger shall continue to monitor and evaluate effluent quality at Monitoring Location E-001 for the constituents listed in Enclosure A of the Regional Water Board's August 6, 2001 Letter, according to the sampling frequency specified in the attached MRP (Attachment E). Compliance with this requirement shall be achieved in accordance with the specifications stated in the Regional Water Board's August 6, 2001 Letter under Effluent Monitoring for Major Dischargers.

The Discharger shall evaluate on an annual basis if concentrations of any constituent increase over past performance. The Discharger shall investigate the cause of the increase. The investigation may include, but need not be limited to, an increase in the effluent monitoring frequency, monitoring of internal process streams, and monitoring of influent sources. This may be satisfied through identification of these constituents as "Pollutants of Concern" in the Discharger's Pollutant Minimization Program described in Provision C.3.b, below. A summary of the annual evaluation of data and source investigation activities shall also be reported in the annual self-monitoring report.

A final report that presents all the data shall be submitted to the Regional Water Board no later than 180 days prior to the Order expiration date. This final report shall be submitted with the application for permit reissuance.

b. Ambient Background Receiving Water Study

The Discharger shall collect or participate in collecting background ambient receiving water monitoring for priority pollutants that is required to perform RPA and to calculate effluent limitations. The data on the conventional water quality

parameters (pH, salinity, and hardness) shall also be sufficient to characterize these parameters in the receiving water at a point after the discharge has mixed with the receiving waters. This provision may be met through monitoring through the Collaborative Bay Area Clean Water Agencies (BACWA) Study, or a similar ambient monitoring program for San Francisco Bay. This Order may be reopened, as appropriate, to incorporate effluent limits or other requirements based on Regional Water Board review of these data.

The Discharger shall submit a final report that presents all the data to the Regional Water Board 180 days prior to Order expiration. This final report shall be submitted with the application for permit reissuance.

c. Optional Mass Offset

If the Discharger can demonstrate that further net reductions of the total mass loadings of 303(d)-listed pollutants to the receiving water cannot be achieved through economically feasible measures such as aggressive source control, wastewater reuse, and treatment plant optimization, but only through a mass offset program, the Discharger may submit to the Regional Water Board for approval a mass offset plan to reduce 303(d)-listed pollutants to the same watershed or drainage basin. The Regional Water Board may modify this Order to allow an approved mass offset program.

3. Best Management Practices and Pollutant Minimization Program

a. The Discharger shall continue to improve, in a manner acceptable to the Executive Officer, its existing Pollutant Minimization Program to reduce pollutant loadings to the treatment plant, and therefore, to the receiving waters.

b. The Discharger shall submit an annual report, acceptable to the Executive Officer, no later than February 28th of each calendar year.

The annual report shall cover January through December of the preceding year. Each annual report shall include at least the following information:

(1) *A brief description of its treatment plant, treatment plant processes and service area.*

(2) *A discussion of the current pollutants of concern.* Periodically, the Discharger shall determine which pollutants are currently a problem and/or which pollutants may be potential future problems. This discussion shall include the reasons why the pollutants were chosen.

(3) *Identification of sources for the pollutants of concern.* This discussion shall include how the Discharger intends to estimate and identify pollutant sources. The Discharger should also identify sources or potential pollutant sources not directly within the ability or authority of the Discharger to control, such as the potable water supply and air deposition.

(4) *Identification of tasks to reduce the sources of the pollutants of concern.* This discussion shall identify and prioritize tasks to address the Discharger's pollutants of concern. The Discharger may implement the tasks themselves or participate in group, regional, or national tasks that will address its pollutants of concern whenever it is efficient and appropriate to do so. A time line shall be included for the implementation of each task.

(5) *Outreach to employees.* The Discharger shall inform its employees about the pollutants of concern, potential sources, and how they might be able to help reduce the discharge of these pollutants. The Discharger may provide a forum for employees to provide input to the program.

(6) *Continuation of Public Outreach Program.* The Discharger shall prepare a public outreach program to communicate pollution minimization measures to its service area. Outreach may include participation in existing community events such as county fairs, initiating new community events such as displays and contests during Pollution Prevention Week, conducting school outreach programs, conducting plant tours, and providing public information in various media. Information shall be specific to target audiences. The Discharger shall coordinate with other agencies as appropriate.

(7) *Discussion of criteria used to measure Program's and tasks' effectiveness.* The Discharger shall establish criteria to evaluate the effectiveness of its Pollution Minimization Program. This discussion shall include the specific criteria used to measure the effectiveness of each of the tasks in item b.3., b.4., b.5., and b.6.

(8) *Documentation of efforts and progress.* This discussion shall detail all of the Discharger's activities in the Pollution Minimization Program during the reporting year.

(9) *Evaluation of Program's and tasks' effectiveness.* The Discharger shall use the criteria established in b.7 to evaluate the Program's and tasks' effectiveness.

(10) *Identification of specific tasks and time schedules for future efforts.* Based on the evaluation, the Discharger shall detail how it intends to continue or change its tasks to more effectively reduce the amount of pollutants to the treatment plant and subsequently its effluent.

c. Pollutant Minimization Program for Reportable Priority Pollutants

The Discharger shall develop and conduct a Pollutant Minimization Program (PMP) as further described below when there is evidence (e.g., sample results reported as DNQ when the effluent limitation is less than the MDL, sample results from analytical methods more sensitive than those methods required by this Order, presence of whole effluent toxicity, health advisories for fish consumption, results of benthic or aquatic organism tissue sampling) that a priority pollutant is present in the effluent above an effluent limitation and either:

(1) A sample result is reported as DNQ and the effluent limitation is less than the RL; or

(2) A sample result is reported as ND and the effluent limitation is less than the MDL, using definitions described in the SIP.

d. If triggered by the reasons in Provision C.3.c. above, the Discharger's PMP shall include, but not be limited to, the following actions and submittals acceptable to the Regional Water Board:

(1) An annual review and semi-annual monitoring of potential sources of the reportable priority pollutant(s), which may include fish tissue monitoring and other bio-uptake sampling, or alternative measures approved by the Executive Officer when it is demonstrated that source monitoring is unlikely to produce useful analytical data;

(2) Quarterly monitoring for the reportable priority pollutant(s) in the influent to the wastewater treatment system, or alternative measures approved by the Executive Officer, when it is demonstrated that influent monitoring is unlikely to produce useful analytical data;

(3) Submittal of a control strategy designed to proceed toward the goal of maintaining concentrations of the reportable priority pollutant(s) in the effluent at or below the effluent limitation;

(4) Implementation of appropriate cost-effective control measures for the reportable priority pollutant(s), consistent with the control strategy; and

(5) The annual report required by Provision C.3.b. above, shall specifically address the following items:

i. All PMP monitoring results for the previous year;

ii. A list of potential sources of the reportable priority pollutant(s);

iii. A summary of all actions undertaken pursuant to the control strategy; and

iv. A description of actions to be taken in the following year.

4. Construction, Operation and Maintenance Specifications

a. Wastewater Facilities, Review and Evaluation, and Status Reports

(1) The Discharger shall operate and maintain its wastewater collection, treatment, and disposal facilities in a manner to ensure that all facilities are adequately staffed, supervised, financed, operated, maintained, repaired, and upgraded as necessary, in order to provide adequate and reliable transport, treatment, and disposal of all wastewater from both existing and planned future wastewater sources under the Discharger's service responsibilities.

(2) The Discharger shall regularly review and evaluate its wastewater facilities and operation practices in accordance with section a.1 above. Reviews and evaluations shall be conducted as an ongoing component of the Discharger's administration of its wastewater facilities.

(3) The Discharger shall provide the Executive Officer, upon request, a report describing the current status of its wastewater facilities and operation practices, including any recommended or planned actions and an estimated time schedule for these actions. The Discharger shall also include, in each annual self-monitoring report, a description or summary of review and evaluation procedures, and applicable wastewater facility programs or capital improvement projects.

b. Operations and Maintenance Manual (O&M), Review and Status Reports

(1) The Discharger shall maintain an O&M Manual as described in the findings of this Order for the Discharger's wastewater facilities. The O&M Manual shall be maintained in usable condition and be available for reference and use by all applicable personnel.

(2) The Discharger shall regularly review, revise, or update, as necessary, the O&M Manual(s) so that the document(s) may remain useful and relevant to current equipment and operation practices. Reviews shall be conducted annually, and revisions or updates shall be completed as necessary. For any significant changes in treatment facility equipment or operation practices, applicable revisions shall be completed within 90 days of completion of such changes.

(3) The Discharger shall provide the Executive Officer, upon request, a report describing the current status of its O&M manual, including any recommended or planned actions and an estimated time schedule for these actions. The Discharger shall also include, in each annual self-monitoring report, a description or summary of review and evaluation procedures and applicable changes to its operations and maintenance manual.

c. Contingency Plan, Review and Status Reports

(1) The Discharger shall maintain a Contingency Plan as required by Regional Water Board Resolution 74-10 (Attachment G) and as prudent in accordance with current municipal facility emergency planning. The discharge of pollutants in violation of this Order where the Discharger has failed to develop and/or adequately implement a Contingency Plan will be the basis for considering such discharge a willful and negligent violation of this Order pursuant to Section 13387 of the CWC.

(2) The Discharger shall regularly review and update, as necessary, the Contingency Plan so that the plan may remain useful and relevant to current equipment and operation practices. Reviews shall be conducted annually, and updates shall be completed as necessary.

(3) The Discharger shall provide the Executive Officer, upon request, a report describing the current status of its Contingency Plan review and update. The Discharger shall also include, in each annual self-monitoring report, a description or summary of review and evaluation procedures and applicable changes to its Contingency Plan.

5. Special Provisions for POTWs

a. Pretreatment Program

(1) Pretreatment Program: The Discharger shall implement and enforce its approved pretreatment program in accordance with federal Pretreatment Regulations (40 CFR § 403), pretreatment standards promulgated under Sections 307(b), 307(c), and 307(d) of the CWA, pretreatment requirements specified under 40 CFR § 122.44(j), and the requirements in **Attachment H**, "Pretreatment Requirements." The Discharger's responsibilities include, but are not limited to:

i. Enforcement of National Pretreatment Standards of 40 CFR §§ 403.5 and 403.6;

ii. Implementation of its pretreatment program in accordance with legal authorities, policies, procedures, and financial provisions described in the General Pretreatment regulations (40 CFR § 403) and its approved pretreatment program;

iii. Submission of reports to USEPA, the State Water Board, and the Regional Water Board, as described in **Attachment H** "Pretreatment Requirements".

iv. Evaluate the need to revise local limits under 40 CFR § 403.5(c)(1); and within 180 days after the effective date of this Order, submit a report acceptable to the Executive Officer describing the changes with a plan and schedule for implementation. To ensure no significant increase in the discharge of copper, and thus compliance with antidegradation requirements, the Discharger shall not consider eliminating or relaxing local limits for copper in this evaluation.

(2) The Discharger shall implement its approved pretreatment program and the program shall be an enforceable condition of this Order. If the Discharger fails to perform the pretreatment functions, the Regional Water Board, the State Water Board, or the USEPA may take enforcement actions against the Discharger as authorized by the CWA.

b. Sludge Management Practices Requirements

(1) All sludge generated by the Discharger must be disposed of in a municipal solid waste landfill, reused by land application, or disposed of in a sludge-only landfill in accordance with 40 CFR §503. If the Discharger desires to dispose of sludge by a different method, a request for permit modification must be

submitted to USEPA 180 days before start-up of the alternative disposal practice. All the requirements in 40 CFR §503 are enforceable by USEPA whether or not they are stated in an NPDES permit or other permit issued to the Discharger. The Regional Water Board should be copied on relevant correspondence and reports forwarded to USEPA regarding sludge management practices.

(2) Sludge treatment, storage and disposal or reuse shall not create a nuisance, such as objectionable odors or flies, or result in groundwater contamination.

(3) The Discharger shall take all reasonable steps to prevent or minimize any sludge use or disposal which has a likelihood of adversely affecting human health or the environment.

(4) The discharge of sludge shall not cause waste material to be in a position where it is or can be carried from the sludge treatment and storage site and deposited in waters of the State.

(5) The sludge treatment and storage site shall have facilities adequate to divert surface runoff from adjacent areas, to protect boundaries of the site from erosion, and to prevent any conditions that would cause drainage from the materials in the temporary storage site. Adequate protection is defined as protection from at least a 100-year storm and protection from the highest possible tidal stage that may occur.

(6) For sludge that is applied to the land, placed on a surface disposal site, or fired in a sludge incinerator as defined in 40 CFR §503, the Discharger shall submit an annual report to USEPA and the Regional Water Board containing monitoring results and pathogen and vector attraction reduction requirements as specified by 40 CFR §503, postmarked February 15 of each year, for the period covering the previous calendar year.

(7) Sludge that is disposed of in a municipal solid waste landfill must meet the requirements of 40 CFR §258. In the annual self-monitoring report, the Discharger shall include the amount of sludge disposed of and the landfill(s) to which it was sent.

(8) Permanent on-site sludge storage or disposal activities are not authorized by this Order. A report of Waste Discharge shall be filed and the site brought into compliance with all applicable regulations prior to commencement of any such activity by the Discharger.

(9) Sludge Monitoring and Reporting Provisions of this Regional Water Board's Standard Provisions (**Attachment G**), apply to sludge handling, disposal and reporting practices.

(10) The Regional Water Board may amend this Order prior to expiration if changes occur in applicable state and federal sludge regulations.

c. Sanitary Sewer Overflows and Sewer System Management Plan

The Discharger's collection system is part of the facility that is subject to this Order. As such, the Discharger must properly operate and maintain its collection system (Attachment D, Standard Provisions - Permit Compliance, subsection I.D). The Discharger must report any noncompliance (Attachment D, Standard Provision - Reporting, subsections V.E.1 and V.E.2), and mitigate any discharge from the Discharger's collection system in violation of this Order (Attachment D, Standard Provisions - Permit Compliance, subsection I.C). The State Water Board's General Waste Discharge Requirements for Collection System Agencies (Order No. 2006-0003 DWQ) has requirements for operation and maintenance of collection systems and for reporting and mitigating sanitary sewer overflows. While the Discharger must comply with both the General Waste Discharge Requirements for Collection System Agencies (General Collection System WDR) and this Order, the General Collection System WDR more clearly and specifically stipulates requirements for operation and maintenance and for reporting and mitigating sanitary sewer overflows.

Implementation of the General Collection System WDR requirements for proper operation and maintenance and mitigation of spills will satisfy the corresponding federal NPDES requirements specified in this Order. Following reporting requirements in the General Collection System WDR will satisfy NPDES reporting requirements for sewage spills. Furthermore, the Discharger shall comply with the schedule for development of sewer system management plans (SSMPs) as indicated in the letter issued by the Regional Water Board on July 7, 2005, pursuant to Water Code Section 13267. The Discharger shall report sanitary sewer overflows electronically using the State Water Board's on-line reporting system.

6. Corrective Measures to Eliminate Use of the Nearshore Outfall

Any discharge of wastewater from the nearshore outfall is a violation of Discharge Prohibitions III.A and C. The Discharger must undertake the following steps to eliminate future discharges from the nearshore outfall.

Task	Deadline
1. *Alternatives*. Implement the alternatives identified in the Discharger's No Feasible Alternatives Analysis submitted on February 14, 2007. At a minimum these should include:	
a. Use empty aeration basin as-needed during wet weather events.	a. September 1, 2008
b. Install a retention basin that is at least 660,000 gallons.	b. September 1, 2011
2. *Completion report.* Provide annual updates on the progress in completing the alternatives described in Task 1.	Annually with Annual Report

7. Corrective Measures to Minimize Blending

The Discharger shall comply with the following tasks and deadlines to minimize blending events.

Task	Deadline
1. *Wet Weather Improvements.* Submit a technical report to the Regional Water Board that evaluates alternatives for potential wet weather conveyance and treatment plant improvements. Comparisons of various alternatives should be based on costs, effectiveness, and implementability. The report should propose preferred alternative(s) based on the results of the analysis. At a minimum, the report should include the alternatives identified in the No Feasible Alternatives Analysis submitted on February 14, 2007: • Acquire second combination sewer cleaning truck • Acquire new sewer TV system vehicle • Rehabilitate or replace sewers in poor condition and sewers that require frequent maintenance • Implement identified controls to reduce return of water back to facility headworks • Tasks identified in Provision 6 will also minimize blending	January 10, 2009
2. *Workplan.* Prepare a workplan to implement the preferred alternatives from the technical report.	April 10, 2009
3. *Alternatives*. Begin implementing the measures identified in the workplan upon approval of the plan by the Regional Water Board.	In accordance with the workplan described in Task 2 above
4. *Completion Report.* Provide annual updates on progress in completing measures specified in the workplan.	Annually with the Annual Report
5. *No Feasible Alternatives Analysis.* Complete a utility analysis if the discharger seeks to continue to bypass peak wet weather flows around its secondary treatment units. The utility analysis must satisfy 40 CFR 122.41(m)(4)(i)(A)-(C) and any applicable policy or guidance such as the process set forth in Part 1 of USEPA's Peak Wet Weather Policy's No Feasible Alternatives Analysis Process (available at *http://cfpub.epa.gov/npdes/wetweather.cfm*) once it is finalized.	180 days prior to the Order expiration date

8. Dioxin-TEQ Compliance Schedule

The Discharger shall meet the following tasks and deadlines.

Task	Deadline
1. Continue semi-annual monitoring for dioxin-TEQ at Monitoring Point E-001.	Upon the effective date of this Order.
2. Report on the status of dioxin-TEQ monitoring and analytical results semi-annually no later than April 15 and October 15 of each calendar year in the March and September self-monitoring reports	Upon the effective date of this Order.
3. If dioxin-TEQ monitoring data show that the Discharger is out of compliance, as described in Section 2.4.5, Compliance Determination, of the State Implementation Policy, with the final water quality based effluent limits specified in Effluent Limitations and Discharge Specifications D (Table 5), the Discharger shall identify and implement source control measures to reduce concentrations of dioxin-TEQ to the treatment plant, and therefore to receiving waters.	No later than 12 months after a detection of dioxin-TEQ that is out of compliance with the final effluent limits.
4. The Discharger shall evaluate and report on the effectiveness of its source control measures in reducing concentrations of dioxin-TEQ to its treatment plant. If, following previous measures, monitoring data show that the Discharger remains out of compliance with final limits for dioxin-TEQ, the Discharger shall also identify and implement additional source control measures to reduce concentrations of this pollutant.	Annually in the Annual Best Management Practices and Pollutant Minimization Report required by Provision VI.C.3.
5. In the event that, following previously implemented source control measures, monitoring data show that the Discharger is out of compliance with final water quality based effluent limits specified in Effluent Limitations and Discharge Specifications D (Table 5) for dioxin-TEQ, the Discharger shall submit a schedule for implementation of additional actions to reduce the concentrations of this pollutant.	September 1, 2011
6. The Discharger shall commence implementation of the identified additional actions in accordance with the schedule submitted in task 5, above.	October 15, 2011
7. Full compliance with Effluent Limitations and Discharge Specifications D (Table 5) for dioxin-TEQ. Alternatively, the Discharger may comply with the limit through implementation of a mass offset strategy for dioxin-TEQ in accordance with policies in effect at that time.	March 31, 2018

9. Action Plan for Cyanide

The Discharger shall implement an action plan for cyanide as described in Appendix I of *Staff Report on Proposed Site-Specific Water Quality Objectives for Cyanide for San Francisco Bay*, December 4, 2006.

10. Action Plan for Copper

If and when the copper alternate limits in section IV of this Order become effective, the Discharger shall initiate implementation of an action plan for copper in accordance with the Basin Plan Copper Site-Specific Objective Amendment.

VII. COMPLIANCE DETERMINATION

Compliance with the effluent limitations contained in section IV of this Order will be determined as specified below:

A. General

Compliance with effluent limitations for priority pollutants shall be determined using sample reporting protocols defined in the MRP, **Attachment A** and section VI of the Fact Sheet of this Order. For purposes of reporting and administrative enforcement by the Regional and State Water Boards, the Discharger shall be deemed out of compliance with effluent limitations if the concentration of the priority pollutant in the monitoring sample is greater than the effluent limitation and greater than or equal to the reporting level (RL).

B. Multiple Sample Data

When determining compliance with an AMEL or MDEL for priority pollutants and more than one sample result is available, the Discharger shall compute the arithmetic mean unless the data set contains one or more reported determinations of “Detected, but Not Quantified” (DNQ) or “Not Detected” (ND). In those cases, the Discharger shall compute the median in place of the arithmetic mean in accordance with the following procedure:

1. The data set shall be ranked from low to high, ranking the reported ND determinations lowest, DNQ determinations next, followed by quantified values (if any). The order of the individual ND or DNQ determinations is unimportant.

2. The median value of the data set shall be determined. If the data set has an odd number of data points, then the median is the middle value. If the data set has an even number of data points, then the median is the average of the two values around the middle unless one or both of the points are ND or DNQ, in which case the median value shall be the lower of the two data points where DNQ is lower than a value and ND is lower than DNQ.

ATTACHMENT A – DEFINITIONS

Acute Toxicity

a. Acute Toxicity (TUa)

Expressed in Toxic Units Acute (TUa)

$$TUa = \frac{100}{\text{96-hr LC}_{50\%}}$$

b. Lethal Concentration 50% (LC 50)

LC 50 (percent waste giving 50% survival of test organisms) shall be determined by static or continuous flow bioassay techniques using standard marine test species as specified in Ocean Plan Appendix III. If specific identifiable substances in wastewater can be demonstrated by the discharger as being rapidly rendered harmless upon discharge to the marine environment, but not as a result of dilution, the LC 50 may be determined after the test samples are adjusted to remove the influence of those substances.

When it is not possible to measure the 96-hour LC 50 due to greater than 50 percent survival of the test species in 100 percent waste, the toxicity concentration shall be calculated by the expression:

$$TUa = \frac{\log (100 - S)}{1.7}$$

where:

S = percentage survival in 100% waste. If S > 99, TUa shall be reported as zero.

Arithmetic Mean (μ) also called the average, is the sum of measured values divided by the number of samples. For ambient water concentrations, the arithmetic mean is calculated as follows:

Arithmetic mean = $\mu = \Sigma x / n$ where: Σx is the sum of the measured ambient water concentrations, and n is the number of samples.

Average Monthly Effluent Limitation (AMEL) the highest allowable average of daily discharges over a calendar month, calculated as the sum of all daily discharges measured during a calendar month divided by the number of daily discharges measured during that month.

Average Weekly Effluent Limitation (AWEL) the highest allowable average of daily discharges over a calendar week (Sunday through Saturday), calculated as the sum of all daily discharges measured during a calendar week divided by the number of daily discharges measured during that week.

Bioaccumulative pollutants are those substances taken up by an organism from its surrounding medium through gill membranes, epithelial tissue, or from food and subsequently concentrated and retained in the body of the organism.

Carcinogenic pollutants are substances that are known to cause cancer in living organisms.

Coefficient of Variation (*CV*) is a measure of the data variability and is calculated as the estimated standard deviation divided by the arithmetic mean of the observed values.

Daily Discharge: Daily Discharge is defined as either: (1) the total mass of the constituent discharged over the calendar day (12:00 am through 11:59 pm) or any 24-hour period that reasonably represents a calendar day for purposes of sampling (as specified in the Order), for a constituent with limitations expressed in units of mass or; (2) the unweighted arithmetic mean measurement of the constituent over the day for a constituent with limitations expressed in other units of measurement (e.g., concentration).

The daily discharge may be determined by the analytical results of a composite sample taken over the course of one day (a calendar day or other 24-hour period defined as a day) or by the arithmetic mean of analytical results from one or more grab samples taken over the course of the day.

For composite sampling, if 1 day is defined as a 24-hour period other than a calendar day, the analytical result for the 24-hour period will be considered as the result for the calendar day in which the 24-hour period ends.

Detected, but Not Quantified (DNQ) are those sample results less than the RL, but greater than or equal to the laboratory's MDL.

Dilution Credit is the amount of dilution granted to a discharge in the calculation of a water quality-based effluent limitation, based on the allowance of a specified mixing zone. It is calculated from the dilution ratio or determined through conducting a mixing zone study or modeling of the discharge and receiving water.

Effluent Concentration Allowance (ECA) is a value derived from the water quality criterion/objective, dilution credit, and ambient background concentration that is used, in conjunction with the coefficient of variation for the effluent monitoring data, to calculate a long-term average (LTA) discharge concentration. The ECA has the same meaning as waste load allocation (WLA) as used in USEPA guidance (Technical Support Document For Water Quality-based Toxics Control, March 1991, second printing, EPA/505/2-90-001).

Enclosed Bays means indentations along the coast that enclose an area of oceanic water within distinct headlands or harbor works. Enclosed bays include all bays where the narrowest distance between the headlands or outermost harbor works is less than 75 percent of the greatest dimension of the enclosed portion of the bay. Enclosed bays include, but are not limited to, Humboldt Bay, Bodega Harbor, Tomales Bay, Drake's Estero, San Francisco Bay, Morro Bay, Los Angeles-Long Beach Harbor, Upper and Lower Newport Bay, Mission Bay, and San Diego Bay. Enclosed bays do not include inland surface waters or ocean waters.

Estimated Chemical Concentration is the estimated chemical concentration that results from the confirmed detection of the substance by the analytical method below the ML value.

Estuaries means waters, including coastal lagoons, located at the mouths of streams that serve as areas of mixing for fresh and ocean waters. Coastal lagoons and mouths of streams that are temporarily separated from the ocean by sandbars shall be considered estuaries. Estuarine waters shall be considered to extend from a bay or the open ocean to a point upstream where there is no significant mixing of fresh water and seawater. Estuarine waters include~~d~~, but are not limited to, the Sacramento-San Joaquin Delta, as defined in Water Code section 12220, Suisun Bay, Carquinez Strait downstream to the Carquinez Bridge, and appropriate areas of the Smith, Mad, Eel, Noyo, Russian, Klamath, San Diego, and Otay rivers. Estuaries do not include inland surface waters or ocean waters.

Initial Dilution is the process that results in the rapid and irreversible turbulent mixing of wastewater with ocean water around the point of discharge.

For a submerged buoyant discharge, characteristic of most municipal and industrial wastes that are released from the submarine outfalls, the momentum of the discharge and its initial buoyancy act together to produce turbulent mixing. Initial dilution in this case is completed when the diluting wastewater ceases to rise in the water column and first begins to spread horizontally.

For shallow water submerged discharges, surface discharges, and non-buoyant discharges, characteristic of cooling water wastes and some individual discharges, turbulent mixing results primarily from the momentum of discharge. Initial dilution, in these cases, is considered to be completed when the momentum induced velocity of the discharge ceases to produce significant mixing of the waste, or the diluting plume reaches a fixed distance from the discharge to be specified by the Regional Board, whichever results in the lower estimate for initial dilution.

Instantaneous Maximum Effluent Limitation: the highest allowable value for any single grab sample or aliquot (i.e., each grab sample or aliquot is independently compared to the instantaneous maximum limitation).

Instantaneous Minimum Effluent Limitation: the lowest allowable value for any single grab sample or aliquot (i.e., each grab sample or aliquot is independently compared to the instantaneous minimum limitation).

Maximum Daily Effluent Limitation (MDEL) means the highest allowable daily discharge of a pollutant, over a calendar day (or 24-hour period). For pollutants with limitations expressed in units of mass, the daily discharge is calculated as the total mass of the pollutant discharged over the day. For pollutants with limitations expressed in other units of measurement, the daily discharge is calculated as the arithmetic mean measurement of the pollutant over the day.

Median is the middle measurement in a set of data. The median of a set of data is found by first arranging the measurements in order of magnitude (either increasing or decreasing order). If the number of measurements (n) is odd, then the median = $X_{(n+1)/2}$. If n is even, then the median = $(X_{n/2} + X_{(n/2)+1})/2$ (i.e., the midpoint between the $n/2$ and $n/2+1$).

Method Detection Limit (MDL) is the minimum concentration of a substance that can be measured and reported with 99 percent confidence that the analyte concentration is greater than zero, as defined in title 40 of the Code of Federal Regulations, Part 136, Attachment B, revised as of July 3, 1999.

Minimum Level (ML) is the concentration at which the entire analytical system must give a recognizable signal and acceptable calibration point. The ML is the concentration in a sample that is equivalent to the concentration of the lowest calibration standard analyzed by a specific analytical procedure, assuming that all the method specified sample weights, volumes, and processing steps have been followed.

Mixing Zone is a limited volume of receiving water that is allocated for mixing with a wastewater discharge where water quality criteria can be exceeded without causing adverse effects to the overall water body.

Not Detected (ND) are those sample results less than the laboratory's MDL.

Ocean Waters are the territorial marine waters of the State as defined by California law to the extent these waters are outside of enclosed bays, estuaries, and coastal lagoons. Discharges to ocean waters are regulated in accordance with the State Water Board's California Ocean Plan.

Persistent pollutants are substances for which degradation or decomposition in the environment is nonexistent or very slow.

Pollutant Minimization Program (PMP) means waste minimization and pollution prevention actions that include, but are not limited to, product substitution, waste stream recycling, alternative waste management methods, and education of the public and businesses. The goal of the PMP shall be to reduce all potential sources of a priority pollutant(s) through pollutant minimization (control) strategies, including pollution prevention measures as appropriate, to maintain the effluent concentration at or below the water quality-based effluent limitation. Pollution prevention measures may be particularly appropriate for persistent bioaccumulative priority pollutants where there is evidence that beneficial uses are being impacted. The Regional Water Board may consider cost effectiveness when establishing the requirements of a PMP. The completion and implementation of a Pollution Prevention Plan, if required pursuant to Water Code section 13263.3(d), shall be considered to fulfill the PMP requirements.

Pollution Prevention means any action that causes a net reduction in the use or generation of a hazardous substance or other pollutant that is discharged into water and includes, but is not limited to, input change, operational improvement, production process change, and product reformulation (as defined in Water Code section 13263.3). Pollution prevention does not include actions that merely shift a pollutant in wastewater from one environmental medium to another environmental medium, unless clear environmental benefits of such an approach are identified to the satisfaction of the State or Regional Water Board.

Reporting Level (RL) is the ML (and it's associated analytical method) chosen by the Discharger for reporting and compliance determination from the MLs included in this Order. The MLs included in this Order correspond to approved analytical methods for reporting a sample result that are selected by the Regional Water Board either from Appendix 4 of the SIP in accordance with section 2.4.2 of the SIP or established in accordance with section 2.4.3 of the SIP. The ML is based on the proper application of method-based analytical procedures for sample preparation and the absence of any matrix interferences. Other factors may be applied to the ML depending on the specific sample preparation steps employed. For example, the

treatment typically applied in cases where there are matrix-effects is to dilute the sample or sample aliquot by a factor of ten. In such cases, this additional factor must be applied to the ML in the computation of the RL.

Satellite Collection System is the portion, if any, of a sanitary sewer system owned or operated by a different public agency than the agency that owns and operates the wastewater treatment facility that a sanitary sewer system is tributary to.

Source of Drinking Water is any water designated as municipal or domestic supply (MUN) in a Regional Water Board Basin Plan.

Standard Deviation (σ) is a measure of variability that is calculated as follows:

$$\sigma = (\sum[(x - \mu)^2]/(n - 1))^{0.5}$$

where:

x is the observed value;

μ is the arithmetic mean of the observed values; and

n is the number of samples.

Toxicity Reduction Evaluation (TRE) is a study conducted in a step-wise process designed to identify the causative agents of effluent or ambient toxicity, isolate the sources of toxicity, evaluate the effectiveness of toxicity control options, and then confirm the reduction in toxicity. The first steps of the TRE consist of the collection of data relevant to the toxicity, including additional toxicity testing, and an evaluation of facility operations and maintenance practices, and best management practices. A Toxicity Identification Evaluation (TIE) may be required as part of the TRE, if appropriate. (A TIE is a set of procedures to identify the specific chemical(s) responsible for toxicity. These procedures are performed in three phases (characterization, identification, and confirmation) using aquatic organism toxicity tests.)

ATTACHMENT B – FACILITY MAP

Figure B-1. City of Burlingame Wastewater Treatment Facility

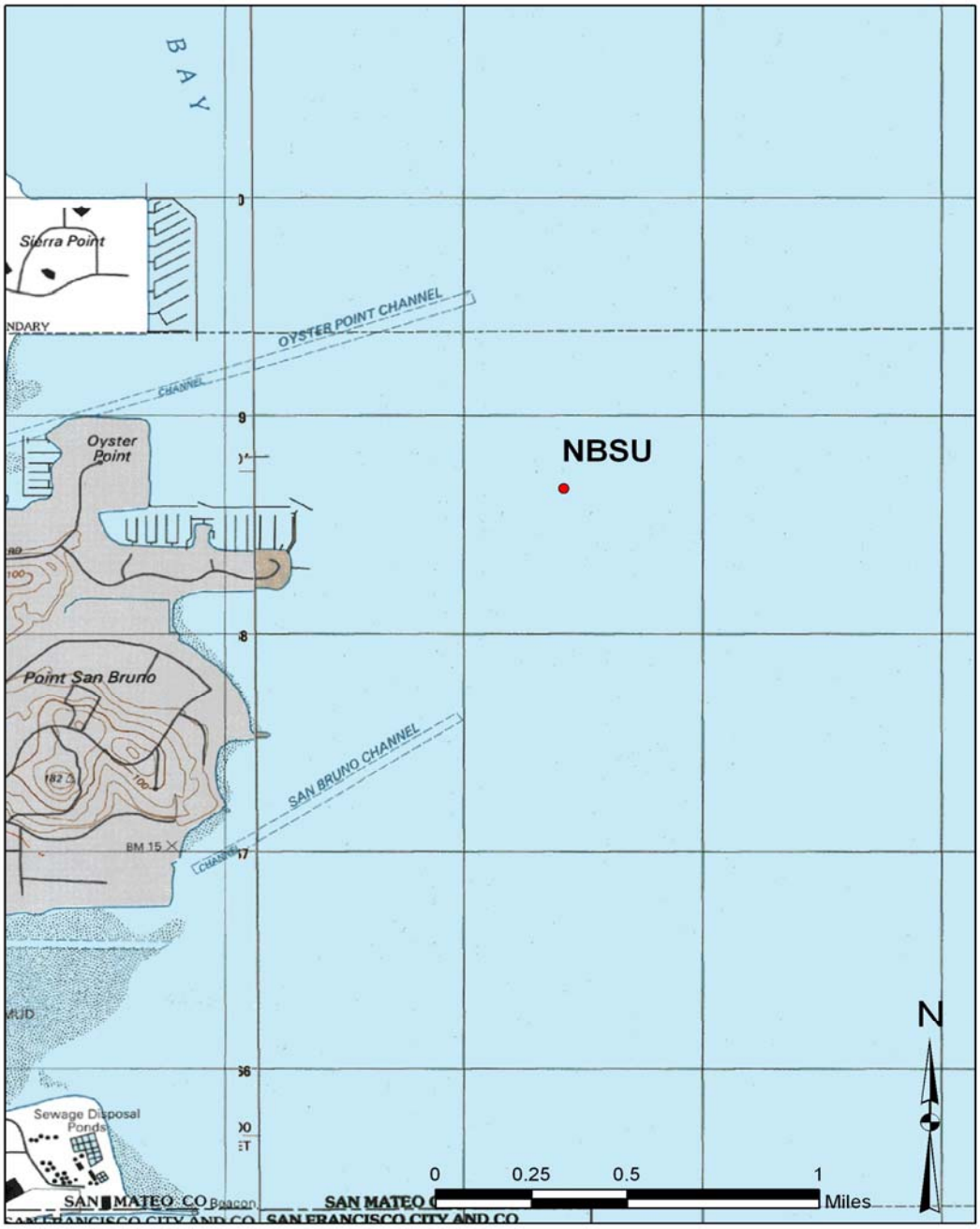

Figure B-2. North Bayside System Unit (NBSU) Deepwater Discharge Location

ATTACHMENT C – PROCESS FLOW DIAGRAM

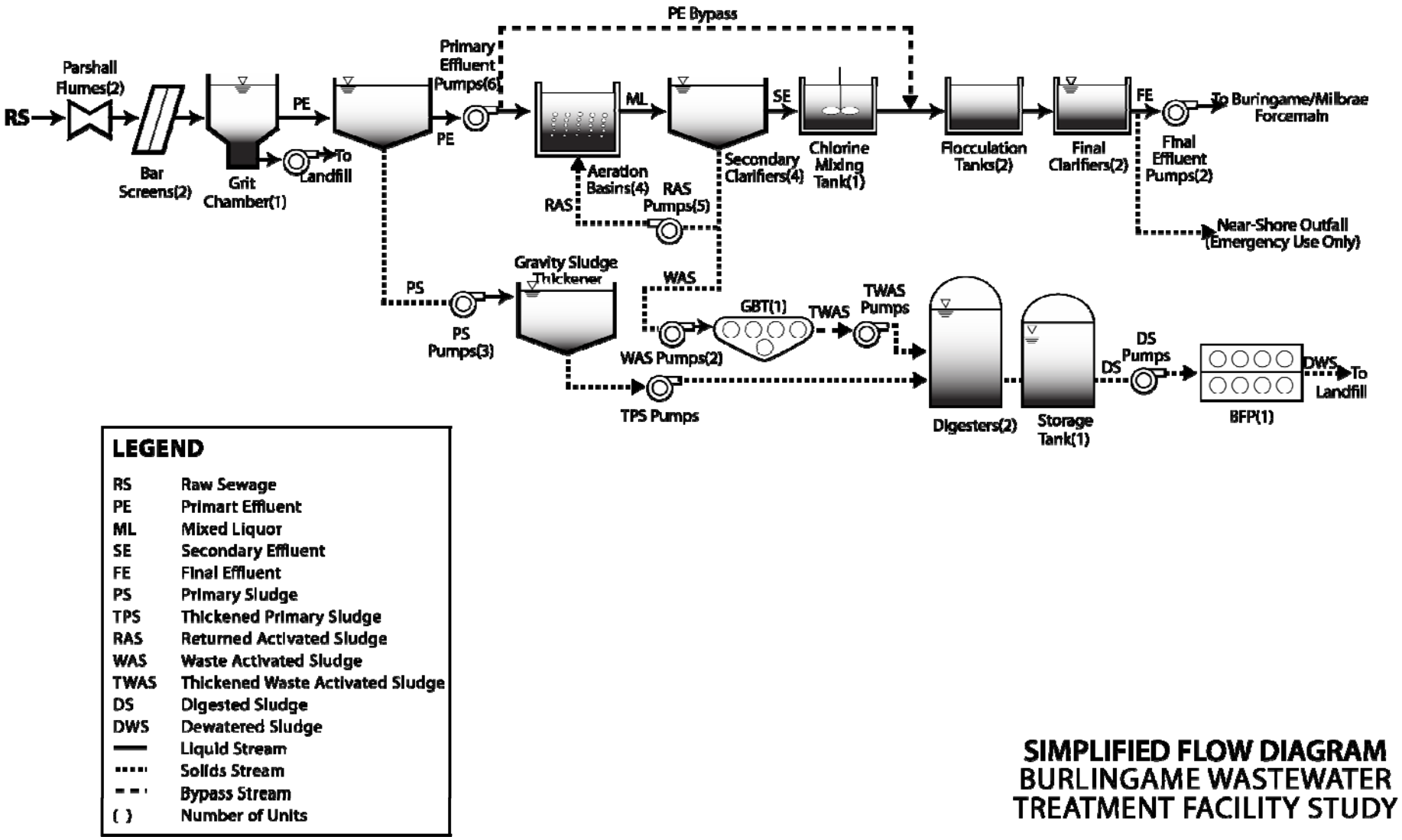

Figure C.1 Simplified Flow Diagram

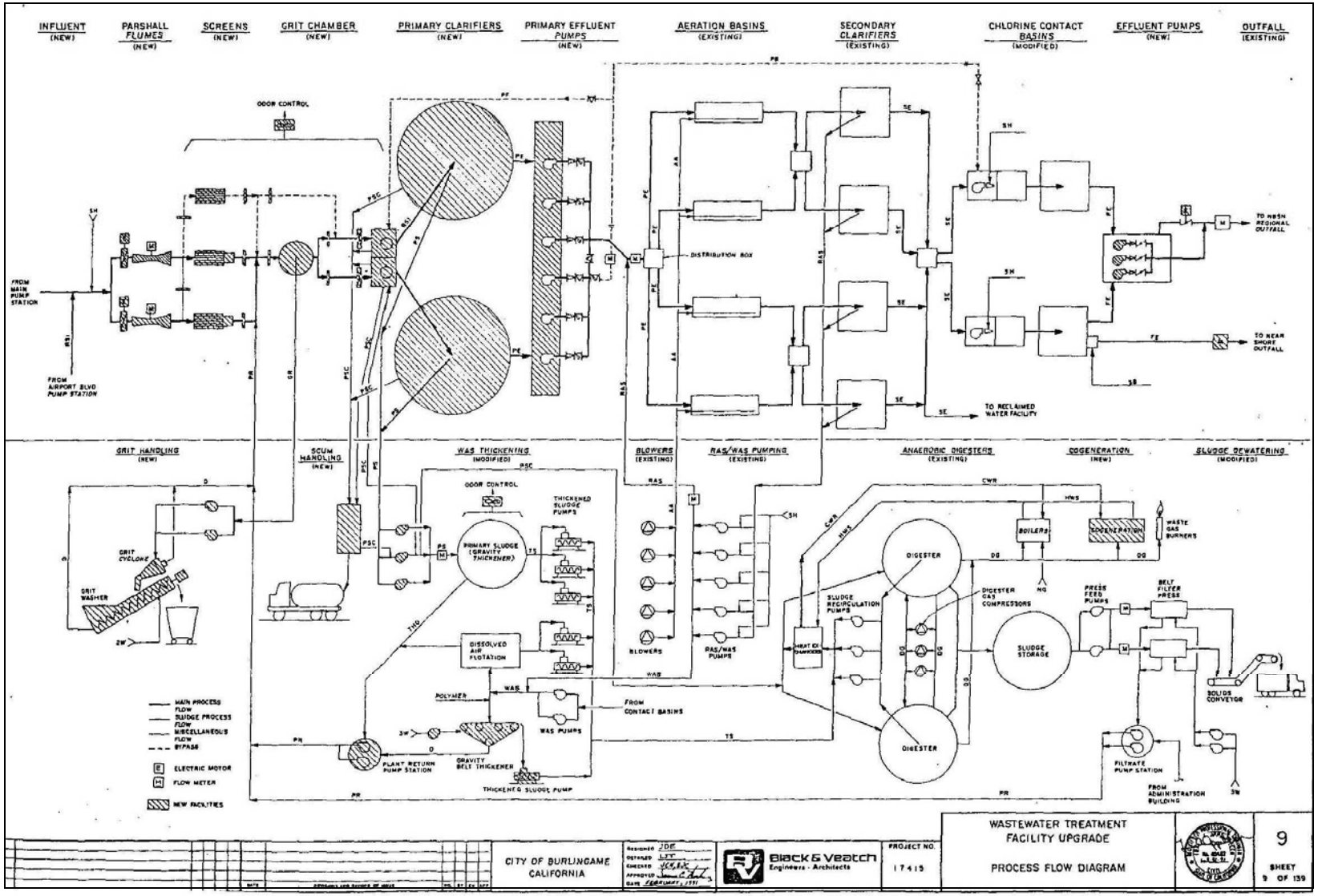

Figure C.2 Detailed Flow Diagram

ATTACHMENT D –STANDARD PROVISIONS

I. STANDARD PROVISIONS – PERMIT COMPLIANCE

A. Duty to Comply

1. The Discharger must comply with all of the conditions of this Order. Any noncompliance constitutes a violation of the CWA and the CWC and is grounds for enforcement action, for permit termination, revocation and reissuance, or modification; or denial of a permit renewal application. (40 C.F.R. § 122.41(a).)

2. The Discharger shall comply with effluent standards or prohibitions established under Section 307(a) of the CWA for toxic pollutants and with standards for sewage sludge use or disposal established under Section 405(d) of the CWA within the time provided in the regulations that establish these standards or prohibitions, even if this Order has not yet been modified to incorporate the requirement. (40 C.F.R. § 122.41(a)(1).)

B. Need to Halt or Reduce Activity Not a Defense

It shall not be a defense for a Discharger in an enforcement action that it would have been necessary to halt or reduce the permitted activity in order to maintain compliance with the conditions of this Order. (40 C.F.R. § 122.41(c).)

C. Duty to Mitigate

The Discharger shall take all reasonable steps to minimize or prevent any discharge or sludge use or disposal in violation of this Order that has a reasonable likelihood of adversely affecting human health or the environment. (40 C.F.R. § 122.41(d).)

D. Proper Operation and Maintenance

The Discharger shall at all times properly operate and maintain all facilities and systems of treatment and control (and related appurtenances) which are installed or used by the Discharger to achieve compliance with the conditions of this Order. Proper operation and maintenance also includes adequate laboratory controls and appropriate quality assurance procedures. This provision requires the operation of backup or auxiliary facilities or similar systems that are installed by a Discharger only when necessary to achieve compliance with the conditions of this Order (40 C.F.R. § 122.41(e).)

E. Property Rights

1. This Order does not convey any property rights of any sort or any exclusive privileges. (40 C.F.R. § 122.41(g).)

2. The issuance of this Order does not authorize any injury to persons or property or invasion of other private rights, or any infringement of state or local law or regulations. (40 C.F.R. § 122.5(c).)

F. Inspection and Entry

The Discharger shall allow the Regional Water Board, State Water Board, United States Environmental Protection Agency (USEPA), and/or their authorized representatives (including an authorized contractor acting as their representative), upon the presentation of credentials and other documents, as may be required by law, to (40 C.F.R. § 122.41(i); Wat. Code, § 13383):

1. Enter upon the Discharger's premises where a regulated facility or activity is located or conducted, or where records are kept under the conditions of this Order (40 C.F.R. § 122.41(i)(1));

2. Have access to and copy, at reasonable times, any records that must be kept under the conditions of this Order (40 C.F.R. § 122.41(i)(2));

3. Inspect and photograph, at reasonable times, any facilities, equipment (including monitoring and control equipment), practices, or operations regulated or required under this Order (40 C.F.R. § 122.41(i)(3)); and

4. Sample or monitor, at reasonable times, for the purposes of assuring Order compliance or as otherwise authorized by the CWA or the Water Code, any substances or parameters at any location. (40 C.F.R. § 122.41(i)(4).)

G. Bypass

1. Definitions

   a. "Bypass" means the intentional diversion of waste streams from any portion of a treatment facility. (40 C.F.R. § 122.41(m)(1)(i).)

   b. "Severe property damage" means substantial physical damage to property, damage to the treatment facilities, which causes them to become inoperable, or substantial and permanent loss of natural resources that can reasonably be expected to occur in the absence of a bypass. Severe property damage does not mean economic loss caused by delays in production. (40 C.F.R. § 122.41(m)(1)(ii).)

2. Bypass not exceeding limitations. The Discharger may allow any bypass to occur which does not cause exceedances of effluent limitations, but only if it is for essential maintenance to assure efficient operation. These bypasses are not subject to the provisions listed in Standard Provisions – Permit Compliance I.G.3, I.G.4, and I.G.5 below. (40 C.F.R. § 122.41(m)(2).)

3. Prohibition of bypass. Bypass is prohibited, and the Regional Water Board may take enforcement action against a Discharger for bypass, unless (40 C.F.R. § 122.41(m)(4)(i)):

   a. Bypass was unavoidable to prevent loss of life, personal injury, or severe property damage (40 C.F.R. § 122.41(m)(4)(i)(A));

b. There were no feasible alternatives to the bypass, such as the use of auxiliary treatment facilities, retention of untreated wastes, or maintenance during normal periods of equipment downtime. This condition is not satisfied if adequate back-up equipment should have been installed in the exercise of reasonable engineering judgment to prevent a bypass that occurred during normal periods of equipment downtime or preventive maintenance (40 C.F.R. § 122.41(m)(4)(i)(B)); and

c. The Discharger submitted notice to the Regional Water Board as required under Standard Provisions – Permit Compliance I.G.5 below. (40 C.F.R. § 122.41(m)(4)(i)(C).)

4. The Regional Water Board may approve an anticipated bypass, after considering its adverse effects, if the Regional Water Board determines that it will meet the three conditions listed in Standard Provisions – Permit Compliance I.G.3 above. (40 C.F.R. § 122.41(m)(4)(ii).)

5. Notice

a. Anticipated bypass. If the Discharger knows in advance of the need for a bypass, it shall submit a notice, if possible at least 10 days before the date of the bypass. (40 C.F.R. § 122.41(m)(3)(i).)

b. Unanticipated bypass. The Discharger shall submit notice of an unanticipated bypass as required in Standard Provisions - Reporting V.E below (24-hour notice). (40 C.F.R. § 122.41(m)(3)(ii).)

H. Upset

Upset means an exceptional incident in which there is unintentional and temporary noncompliance with technology based permit effluent limitations because of factors beyond the reasonable control of the Discharger. An upset does not include noncompliance to the extent caused by operational error, improperly designed treatment facilities, inadequate treatment facilities, lack of preventive maintenance, or careless or improper operation. (40 C.F.R. § 122.41(n)(1).)

1. Effect of an upset. An upset constitutes an affirmative defense to an action brought for noncompliance with such technology based permit effluent limitations if the requirements of Standard Provisions – Permit Compliance I.H.2 below are met. No determination made during administrative review of claims that noncompliance was caused by upset, and before an action for noncompliance, is final administrative action subject to judicial review. (40 C.F.R. § 122.41(n)(2).).

2. Conditions necessary for a demonstration of upset. A Discharger who wishes to establish the affirmative defense of upset shall demonstrate, through properly signed, contemporaneous operating logs or other relevant evidence that (40 C.F.R. § 122.41(n)(3)):

a. An upset occurred and that the Discharger can identify the cause(s) of the upset (40 C.F.R. § 122.41(n)(3)(i));

b. The permitted facility was, at the time, being properly operated (40 C.F.R. § 122.41(n)(3)(ii));

c. The Discharger submitted notice of the upset as required in Standard Provisions – Reporting V.E.2.b below (24-hour notice) (40 C.F.R. § 122.41(n)(3)(iii)); and

d. The Discharger complied with any remedial measures required under Standard Provisions – Permit Compliance I.C above. (40 C.F.R. § 122.41(n)(3)(iv).)

3. Burden of proof. In any enforcement proceeding, the Discharger seeking to establish the occurrence of an upset has the burden of proof. (40 C.F.R. § 122.41(n)(4).)

II. STANDARD PROVISIONS – PERMIT ACTION

A. General

This Order may be modified, revoked and reissued, or terminated for cause. The filing of a request by the Discharger for modification, revocation and reissuance, or termination, or a notification of planned changes or anticipated noncompliance does not stay any Order condition. (40 C.F.R. § 122.41(f).)

B. Duty to Reapply

If the Discharger wishes to continue an activity regulated by this Order after the expiration date of this Order, the Discharger must apply for and obtain a new permit. (40 C.F.R. § 122.41(b).)

C. Transfers

This Order is not transferable to any person except after notice to the Regional Water Board. The Regional Water Board may require modification or revocation and reissuance of this Order to change the name of the Discharger and incorporate such other requirements as may be necessary under the CWA and the Water Code. (40 C.F.R. § 122.41(l)(3); § 122.61.)

III. STANDARD PROVISIONS – MONITORING

A. Samples and measurements taken for the purpose of monitoring shall be representative of the monitored activity. (40 C.F.R. § 122.41(j)(1).)

B. Monitoring results must be conducted according to test procedures under Part 136 or, in the case of sludge use or disposal, approved under Part 136 unless otherwise specified in Part 503 unless other test procedures have been specified in this Order. (40 C.F.R. § 122.41(j)(4); § 122.44(i)(1)(iv).)

IV. STANDARD PROVISIONS – RECORDS

A. Except for records of monitoring information required by this Order related to the Discharger's sewage sludge use and disposal activities, which shall be retained for a period of at least five years (or longer as required by Part 503), the Discharger shall retain records of all monitoring information, including all calibration and maintenance records and all original strip chart recordings for continuous monitoring instrumentation, copies of all reports required by this Order, and records of all data used to complete the application for this Order, for a period of at least three (3) years from the date of the sample, measurement, report or application. This period may be extended by request of the Regional Water Board Executive Officer at any time. (40 C.F.R. § 122.41(j)(2).)

B. Records of monitoring information shall include:

1. The date, exact place, and time of sampling or measurements (40 C.F.R. § 122.41(j)(3)(i));

2. The individual(s) who performed the sampling or measurements (40 C.F.R. § 122.41(j)(3)(ii));

3. The date(s) analyses were performed (40 C.F.R. § 122.41(j)(3)(iii));

4. The individual(s) who performed the analyses (40 C.F.R. § 122.41(j)(3)(iv));

5. The analytical techniques or methods used (40 C.F.R. § 122.41(j)(3)(v)); and

6. The results of such analyses. (40 C.F.R. § 122.41(j)(3)(vi).)

C. Claims of confidentiality for the following information will be denied (40 C.F.R. § 122.7(b)):

1. The name and address of any permit applicant or Discharger (40 C.F.R. § 122.7(b)(1)); and

2. Permit applications and attachments, permits and effluent data. (40 C.F.R. § 122.7(b)(2).)

V. STANDARD PROVISIONS – REPORTING

A. Duty to Provide Information

The Discharger shall furnish to the Regional Water Board, State Water Board, or USEPA within a reasonable time, any information which the Regional Water Board, State Water Board, or USEPA may request to determine whether cause exists for modifying, revoking and reissuing, or terminating this Order or to determine compliance with this Order. Upon request, the Discharger shall also furnish to the Regional Water Board, State Water Board, or USEPA copies of records required to be kept by this Order. (40 C.F.R. § 122.41(h); Wat. Code, § 13267.)

B. Signatory and Certification Requirements

1. All applications, reports, or information submitted to the Regional Water Board, State Water Board, and/or USEPA shall be signed and certified in accordance with Standard Provisions – Reporting V.B.2, V.B.3, V.B.4, and V.B.5 below. (40 C.F.R. § 122.41(k).)

2. All permit applications shall be signed by either a principal executive officer or ranking elected official. For purposes of this provision, a principal executive officer of a federal agency includes: (i) the chief executive officer of the agency, or (ii) a senior executive officer having responsibility for the overall operations of a principal geographic unit of the agency (e.g., Regional Administrators of USEPA). (40 C.F.R. § 122.22(a)(3).).

3. All reports required by this Order and other information requested by the Regional Water Board, State Water Board, or USEPA shall be signed by a person described in Standard Provisions – Reporting V.B.2 above, or by a duly authorized representative of that person. A person is a duly authorized representative only if:

   a. The authorization is made in writing by a person described in Standard Provisions – Reporting V.B.2 above (40 C.F.R. § 122.22(b)(1));

   b. The authorization specifies either an individual or a position having responsibility for the overall operation of the regulated facility or activity such as the position of plant manager, operator of a well or a well field, superintendent, position of equivalent responsibility, or an individual or position having overall responsibility for environmental matters for the company. (A duly authorized representative may thus be either a named individual or any individual occupying a named position.) (40 C.F.R. § 122.22(b)(2)); and

   c. The written authorization is submitted to the Regional Water Board and State Water Board. (40 C.F.R. § 122.22(b)(3).)

4. If an authorization under Standard Provisions – Reporting V.B.3 above is no longer accurate because a different individual or position has responsibility for the overall operation of the facility, a new authorization satisfying the requirements of Standard Provisions – Reporting V.B.3 above must be submitted to the Regional Water Board and State Water Board prior to or together with any reports, information, or applications, to be signed by an authorized representative. (40 C.F.R. § 122.22(c).)

5. Any person signing a document under Standard Provisions – Reporting V.B.2 or V.B.3 above shall make the following certification:

   "I certify under penalty of law that this document and all attachments were prepared under my direction or supervision in accordance with a system designed to assure that qualified personnel properly gather and evaluate the information submitted. Based on my inquiry of the person or persons who manage the system or those persons directly responsible for gathering the information, the information submitted is, to the best of my knowledge and belief, true, accurate, and complete. I am aware

that there are significant penalties for submitting false information, including the possibility of fine and imprisonment for knowing violations." (40 C.F.R. § 122.22(d).)

C. Monitoring Reports

1. Monitoring results shall be reported at the intervals specified in the Monitoring and Reporting Program (Attachment E) in this Order. (40 C.F.R. § 122.22(l)(4).)

2. Monitoring results must be reported on a Discharge Monitoring Report (DMR) form or forms provided or specified by the Regional Water Board or State Water Board for reporting results of monitoring of sludge use or disposal practices. (40 C.F.R. § 122.41(l)(4)(i).)

3. If the Discharger monitors any pollutant more frequently than required by this Order using test procedures approved under Part 136 or, in the case of sludge use or disposal, approved under Part 136 unless otherwise specified in Part 503, or as specified in this Order, the results of this monitoring shall be included in the calculation and reporting of the data submitted in the DMR or sludge reporting form specified by the Regional Water Board. (40 C.F.R. § 122.41(l)(4)(ii).)

4. Calculations for all limitations, which require averaging of measurements, shall utilize an arithmetic mean unless otherwise specified in this Order. (40 C.F.R. § 122.41(l)(4)(iii).)

D. Compliance Schedules

Reports of compliance or noncompliance with, or any progress reports on, interim and final requirements contained in any compliance schedule of this Order, shall be submitted no later than 14 days following each schedule date. (40 C.F.R. § 122.41(l)(5).)

E. Twenty-Four Hour Reporting

1. The Discharger shall report any noncompliance that may endanger health or the environment. Any information shall be provided orally within 24 hours from the time the Discharger becomes aware of the circumstances. A written submission shall also be provided within five (5) days of the time the Discharger becomes aware of the circumstances. The written submission shall contain a description of the noncompliance and its cause; the period of noncompliance, including exact dates and times, and if the noncompliance has not been corrected, the anticipated time it is expected to continue; and steps taken or planned to reduce, eliminate, and prevent reoccurrence of the noncompliance. (40 C.F.R. § 122.41(l)(6)(i).)

2. The following shall be included as information that must be reported within 24 hours under this paragraph (40 C.F.R. § 122.41(l)(6)(ii)):

   a. Any unanticipated bypass that exceeds any effluent limitation in this Order. (40 C.F.R. § 122.41(l)(6)(ii)(A).)

   b. Any upset that exceeds any effluent limitation in this Order. (40 C.F.R. § 122.41(l)(6)(ii)(B).)

3. The Regional Water Board may waive the above-required written report under this provision on a case-by-case basis if an oral report has been received within 24 hours. (40 C.F.R. § 122.41(l)(6)(iii).)

F. Planned Changes

The Discharger shall give notice to the Regional Water Board as soon as possible of any planned physical alterations or additions to the permitted facility. Notice is required under this provision only when (40 C.F.R. § 122.41(l)(1)):

1. The alteration or addition to a permitted facility may meet one of the criteria for determining whether a facility is a new source in section 122.29(b) (40 C.F.R. § 122.41(l)(1)(i)); or

2. The alteration or addition could significantly change the nature or increase the quantity of pollutants discharged. This notification applies to pollutants that are not subject to effluent limitations in this Order. (40 C.F.R. § 122.41(l)(1)(ii).)

3. The alteration or addition results in a significant change in the Discharger's sludge use or disposal practices, and such alteration, addition, or change may justify the application of permit conditions that are different from or absent in the existing permit, including notification of additional use or disposal sites not reported during the permit application process or not reported pursuant to an approved land application plan. (40 C.F.R.§ 122.41(l)(1)(iii).)

G. Anticipated Noncompliance

The Discharger shall give advance notice to the Regional Water Board or State Water Board of any planned changes in the permitted facility or activity that may result in noncompliance with General Order requirements. (40 C.F.R. § 122.41(l)(2).)

H. Other Noncompliance

The Discharger shall report all instances of noncompliance not reported under Standard Provisions – Reporting V.C, V.D, and V.E above at the time monitoring reports are submitted. The reports shall contain the information listed in Standard Provision – Reporting V.E above. (40 C.F.R. § 122.41(l)(7).)

I. Other Information

When the Discharger becomes aware that it failed to submit any relevant facts in a permit application, or submitted incorrect information in a permit application or in any report to the Regional Water Board, State Water Board, or USEPA, the Discharger shall promptly submit such facts or information. (40 C.F.R. § 122.41(l)(8).)

VI. STANDARD PROVISIONS – ENFORCEMENT

A. The Regional Water Board is authorized to enforce the terms of this Order under several provisions of the Water Code, including, but not limited to, sections 13385, 13386, and 13387.

VII. ADDITIONAL PROVISIONS – NOTIFICATION LEVELS

A. Publicly-Owned Treatment Works (POTWs)

All POTWs shall provide adequate notice to the Regional Water Board of the following (40 C.F.R. § 122.42(b)):

1. Any new introduction of pollutants into the POTW from an indirect discharger that would be subject to sections 301 or 306 of the CWA if it were directly discharging those pollutants (40 C.F.R. § 122.42(b)(1)); and

2. Any substantial change in the volume or character of pollutants being introduced into that POTW by a source introducing pollutants into the POTW at the time of adoption of this Order. (40 C.F.R. § 122.42(b)(2).)

3. Adequate notice shall include information on the quality and quantity of effluent introduced into the POTW as well as any anticipated impact of the change on the quantity or quality of effluent to be discharged from the POTW. (40 C.F.R. § 122.42(b)(3).)

ATTACHMENT E – MONITORING AND REPORTING PROGRAM

Table of Contents

I. General Monitoring Provisions 2
II. Monitoring Locations 3
III. Influent Monitoring Requirements 4
IV. Effluent Monitoring Requirements 4
A. Monitoring Location – E-001 4
B. Monitoring Location – E-002 6
V. Whole Effluent Toxicity Testing Requirements 6
A. Whole Effluent Acute Toxicity 6
B. Whole Effluent Chronic Toxicity 7
VI. Land Discharge Monitoring Requirements 10
VII. Reclamation Monitoring Requirements 10
VIII. Receiving water Monitoring Requirements – Surface water and Groundwater 10
A. Regional Monitoring Program 10
IX. Legend for MRP Tables 10
X. Other Monitoring Requirements 11
XI. Reporting Requirements 11
A. General Monitoring and Reporting Requirements 11
B. Modifications to Part A of Self-Monitoring Program (Attachment G) 11
C. Self Monitoring Reports (SMRs) 13
D. Discharge Monitoring Reports (DMRs) 15
E. Other Reports 15

List of Tables

Table E-1. Test Methods and Minimum Levels for Pollutants with Reasonable Potential 3
Table E-2. Monitoring Station Locations 3
Table E-3. Influent Monitoring 4
Table E-4. Effluent Monitoring (E-001) 4
Table E-5. Plant Effluent Monitoring at E-002 6
Table E-6. Pretreatment Monitoring Requirements 11
Table E-7. Monitoring Periods and Reporting Schedule 13

ATTACHMENT E – MONITORING AND REPORTING PROGRAM (MRP)

The Code of Federal Regulations (CFR) at 40 CFR §122.48 requires that all NPDES permits specify monitoring and reporting requirements. CWC Sections 13267 and 13383 also authorize the Regional Water Board to require technical and monitoring reports. This MRP establishes monitoring and reporting requirements that implement the Federal and State regulations.

I. GENERAL MONITORING PROVISIONS

A. The Discharger shall comply with the MRP for this Order as adopted by the Regional Water Board, and with all of the Self-Monitoring Program, Part A, adopted August 1993 (SMP). The MRP and SMP may be amended by the Executive Officer pursuant to USEPA regulations 40 CFR122.62, 122.63, and 124.5. If any discrepancies exist between the MRP and SMP, the MRP prevails.

B. Sampling is required during the entire year when discharging. All analyses shall be conducted using current USEPA methods, or that have been approved by the USEPA Regional Administrator pursuant to 40 CFR 136.4 and 40 CFR 136.5, or equivalent methods that are commercially and reasonably available, and that provide quantification of sampling parameters and constituents sufficient to evaluate compliance with applicable effluent limits and to perform reasonable potential analysis. Equivalent methods must be more sensitive than those specified in 40 CFR 136, must be specified in the permit, and must be approved for use by the Executive Officer, following consultation with the State Water Quality Control Board's Quality Assurance Program.

C. Sampling and analysis of additional constituents is required pursuant to Table 1 of the Regional Water Board's August 6, 2001 Letter entitled, *Requirement for Monitoring of Pollutants in Effluent and Receiving Water to Implement New Statewide Regulations and Policy* (**Attachment G**).

D. *Minimum Levels.* For compliance and reasonable potential monitoring, analyses shall be conducted using the commercially available and reasonably achievable detection levels that are lower than applicable water quality objectives or criteria, or the effluent limitations, whichever is lower. The objective is to provide quantification of constituents sufficient to allow evaluation of observed concentrations with respect to the Minimum Levels (MLs) given below.

MLs are the concentrations at which the entire analytical system must give a recognizable signal and acceptable calibration point. The ML is the concentration in a sample that is equivalent to the concentration of the lowest calibration standard analyzed by a specific analytical procedure, assuming that all the method specified sample weights, volumes, and processing steps have been followed. All MLs are expressed as µg/L.

Table E-1 lists the test methods the Discharger may use for compliance and reasonable potential monitoring for the pollutants with effluent limits.

Table E-1. Test Methods and Minimum Levels for Pollutants with Reasonable Potential

CTR #	Constituent	Types of Analytical Methods [a] Minimum Levels (µg/L)											
		GC	GCMS	LC	Color	FAA	GFAA	ICP	ICP MS	SPGFAA	Hydride	CVAA	DCP
6	Copper								0.5	2			
14	Cyanide				5								
16-TEQ	Dioxin-TEQ[b]												

[a] Analytical Methods / Laboratory techniques are defined as follows:
GC = Gas Chromatography;
GCMS = Gas Chromatography/Mass Spectrometry;
LC = High Pressure Liquid Chromatography
Color = Colorimetric;
FAA = Flame Atomic Absorption
GFAA = Graphite Furnace Atomic Absorption;
ICP = Inductively Coupled Plasma
ICPMS = Inductively Coupled Plasma/Mass Spectrometry;
SPGFAA = Stabilized Platform Graphite Furnace Atomic Absorption (i.e. EPA 200.9);
HYDRIDE = Gaseous Hydride Atomic Absorption;
CVAA = Cold Vapor Atomic Absorption; and
DCP = Direct Current Plasma.

[b] The minimum levels for 2,3,7,8-TCDD and all other 16 congeners using U.S. EPA 1613 range from 5-50 pg/L. These MLs were developed in collaboration with BACWA as levels that were achievable by BACWA participants (BACWA letter dated April 23, 2003).

II. MONITORING LOCATIONS

The Discharger shall establish the following monitoring locations to demonstrate compliance with the effluent limitations, discharge specifications, and other requirements in this Order:

Table E-2. Monitoring Station Locations

Type of Sampling Location	Monitoring Location Name	Monitoring Location Description
Influent Station	A-001	At any point in the treatment facility's headworks at which all waste tributary to the system is present and preceding any phase of treatment.
Effluent Station	E-001	Discharge into the NBSU joint use force main.
Effluent Station	E-002	NBSU combined outfall deepwater discharge into Lower San Francisco Bay.

III. INFLUENT MONITORING REQUIREMENTS

The Discharger shall monitor the influent to the facility at A-001 as follows:

Table E-3. Influent Monitoring

Parameter	Units	Minimum Sampling Frequency	Required Analytical Test Method
		C-24 (2)	
Flow(1)	mgd & MG	Cont/D	Meter
BOD_5	mg/L	3/W	(3)
TSS	mg/L	5/W	(3)

(1) For influent flows, the following information shall also be reported monthly:
Total Daily Flow Volume (MG)
Monthly Average Flow (mgd)
Maximum Daily Flow (mgd)
Minimum Daily Flow (mgd)
Total Monthly Flow Volume (MG)

(2) 24-hour composite samples of influent shall be collected on varying days selected at random and shall not include any plant recirculation or other side stream waste. Deviation from this requirement must be approved by the Executive Officer.

(3) Pollutants shall be analyzed using the analytical methods described in 40 CFR Part 136.

IV. EFFLUENT MONITORING REQUIREMENTS

A. Monitoring Location – E-001

1. The Discharger shall monitor treated effluent from the facility at E-001 as follows:

Table E-4. Effluent Monitoring (E-001)

Parameter	Units	Minimum Sampling Frequency		Required Analytical Test Method (1)
		G	C-24	
Flow (2)	mgd & MG		Cont./D	40 CFR 136
BOD_5, 20ºC (3)	mg/L & kg/d		3/W	
TSS (3)	mg/L & kg/d		5/W	
Oil and Grease (4)	mg/L & kg/d	Q		
pH (5)	pH units	5/W		
Chlorine Residual (6)	mg/L		Cont./2H	
Fecal Coliform Bacteria	MPN/100 ml	2/W		
Enterococci Bacteria(7)	Colonies/100 ml	M		
Temperature	ºC	5/W		
Dissolved Oxygen	mg/L & % saturation	D		
Dissolved Sulfides (8)	mg/L	D		
Total Ammonia as (N)(9)	mg/L	M		
Acute Toxicity (9, 10)	% Survival		Q	
Chronic Toxicity (9, 11)			1/Y	
Copper	µg/L & kg/d		M	
Dioxin-TEQ	µg/L	2/Y		
Remaining Priority Pollutants	µg/L	2/Y (12)		According to the August 6, 2001 Letter(13)
Pretreatment Requirements	µg/L or ppb	See Table E-6		

(1) Pollutants and pollutant parameters shall be analyzed using the analytical methods described in 40 CFR Part 136. For priority pollutants, the methods must meet the lowest minimum levels (MLs) specified in Attachment 4 of the SIP. Where no methods are specified for a given pollutant, the methods must be approved by this Regional Water Board or the State Water Board.

(2) Flow Monitoring:
For effluent flows, the following information shall also be reported monthly:
Total Daily Flow Volume (MG)
Daily Average Flow (mgd)
Monthly Average Flow (mgd)
Maximum Daily Flow (mgd)
Minimum Daily Flow (mgd)
Total Monthly Flow Volume (mgd & MD)

(3) The percent removal for BOD and TSS shall be reported for each calendar month. Samples for BOD and TSS shall be collected simultaneously with influent samples.

(4) Each oil & grease sampling event shall consist of a composite sample comprised of three grab samples taken at equal intervals during the sampling date, with each grab sample being collected in a glass container. Each glass container used for sample collection or mixing shall be thoroughly rinsed with solvent rinsings as soon as possible after use, and the solvent rinsings shall be added to the composite sample for extraction and analysis.

(5) pH shall be monitored continuously; the minimum and maximum pH values for each day shall be reported in monthly self-monitoring reports.

(6) Chlorine residual: During all times when chlorination is used for disinfection of the effluent, effluent chlorine residual concentrations shall be monitored continuously, or by grab samples taken once every 2 hours. Chlorine residual concentrations shall be monitored and reported for the E-001 sampling point prior to dechlorination.

(7) The Discharger shall monitor for enterococci using USEPA's Membrane Filter Test Method 1600, or an EPA approved method such as Enterolert.

(8) Sulfide analysis shall be run when dissolved oxygen concentrations fall below 5.0 mg/l.

(9) Samples may be taken from the final secondary effluent prior to disinfection.

(10 Acute bioassay tests shall be performed in accordance with section V.A of this MRP.

(11) Critical Life Stage Toxicity Test shall be performed and reported in accordance with the Chronic Toxicity Requirements specified in sections V.B of the MRP.

12) For the same pollutants the sampling frequencies shall be the higher ones under this table or under the pretreatment program sampling required in section VII. A of the MRP (Table E-6). Pretreatment program monitoring can be used to satisfy part of these sampling requirements.

(13) Sampling methods for all priority pollutants in the SIP is addressed in a letter dated August 6, 2001, from the Regional Water Board Staff: "Requirements for Monitoring of Pollutants in Effluent and Receiving Water to Implement New Statewide Regulations and Policy" (not attached but available for review or download on the Regional Water Board's website at http://www.waterboards.ca.gov/sanfranciscobay/).

B. Monitoring Location – E-002

The Discharger shall monitor treatment plant effluent at E-002 as follows:

Table E-5. Plant Effluent Monitoring at E-002(5)

Parameter	Units	Minimum Sampling Frequency		Required Analytical Test Method(1)
		G	C-24	
The following parameters shall be monitored at E-002				
Flow(2)	MGD & MG		Cont.	
Total Cyanide(3)	µg/L	M		(3)
Chlorine Residual(4)	mg/l		Cont./2H	

(1) Testing conducted under the pretreatment and reuse programs may be used to satisfy the monitoring requirements of this Order. All analyses shall be performed using current USEPA methods, as specified in 40 CFR Part 136.

(2) Flow Monitoring:

For effluent flows, the following information shall also be reported monthly:
Total Daily Flow Volume (MG)
Daily Average Flow (mgd)
Monthly Average Flow (mgd)
Maximum Daily Flow (mgd)
Minimum Daily Flow (mgd)
Total Monthly Flow Volume (MG)

(3) The Discharger may, at its own option, analyze for cyanide as Weak Acid Dissociable (WAD) cyanide using protocols specified in Standard Methods No. 4500-CN-I, latest edition.

(4) During all times when chlorination is used for disinfection of the effluent, effluent chlorine residual concentrations shall be monitored continuously, or by grab samples taken once every 2 hours. Chlorine residual concentrations shall be monitored and reported for sampling points both prior to and following dechlorination.

(5) In conducting the combined effluent sampling, visual observations of the discharge shall be made. A log shall be kept of the effluent conditions. Attention shall be given to:

a. The presence or absence of floating or suspended material of waste origin, including oil, grease, algae, and other macroscopic particulate matter,

b. Odor: Presence or absence, characterization, source, distance of travel.

Notes on effluent conditions shall be summarized in the monitoring reports submitted by the South San Francisco Water Quality Control Plant.

V. WHOLE EFFLUENT TOXICITY TESTING REQUIREMENTS

The Discharger shall monitor acute and chronic toxicity in samples of the final secondary effluent prior to disinfection as follows:

A. Whole Effluent Acute Toxicity

1. Compliance with the acute toxicity effluent limitations of this Order shall be evaluated by measuring survival of test organisms exposed to 96-hour continuous flow-through bioassays.

2. Test organisms shall be fathead minnows (*Pimephales promelas*). The Executive Officer may change to another test species if data suggest that another test species is more sensitive to the discharge.

3. All bioassays shall be performed according to the most up-to-date protocols in 40 CFR Part 136, currently the "Methods for Measuring the Acute Toxicity of Effluents and Receiving Water to Freshwater and Marine Organisms," 5th Edition.

4. If specific identifiable substances in the discharge can be demonstrated by the Discharger as being rapidly rendered harmless upon discharge to the receiving water, compliance with the acute toxicity limit may be determined after the test samples are adjusted to remove the influence of those substances. Written approval from the Executive Officer must be obtained to authorize such an adjustment.

5. The sample may be taken from final secondary effluent prior to disinfection. Monitoring of the bioassay water shall include, on a daily basis, the following parameters: pH, dissolved oxygen, ammonia (if toxicity is observed), temperature, hardness, and alkalinity. These results shall be reported. If a violation of acute toxicity requirements occurs or if the control fish survival rate is less than 90 percent, the bioassay test shall be restarted with new batches of fish and shall continue back to back until compliance is demonstrated.

B. Whole Effluent Chronic Toxicity

1. Chronic Toxicity Monitoring Requirements

   a. *Sampling*. The Discharger shall collect 24-hour composite samples of the effluent at the compliance point (specified in footnote 9 of Table E-4), for critical life stage toxicity testing as indicated below. For toxicity tests requiring renewals, 24-hour composite samples collected on consecutive days are required.

   b. *Test Species*. *Mysidopsis bahia*. The Executive Officer may change to another test species if data suggest that another test species is more sensitive to the discharge.

   c. *Methodology*. Sample collection, handling and preservation shall be in accordance with USEPA protocols. In addition, bioassays shall be conducted in compliance with the most recently promulgated test methods, as shown in **Appendix E-1.** These are "Short-Term Methods for Estimating the Chronic Toxicity of Effluents and Receiving Waters to Marine and Estuarine Organisms," currently third edition (EPA-821-R-02-014), and "Short-term Methods for Estimating the Chronic Toxicity of Effluents and Receiving Waters to Freshwater Organisms," currently fourth Edition (EPA-821-R-02-013), with exceptions granted the Discharger by the Executive Officer and the Environmental Laboratory Accreditation Program (ELAP).

   d. *Dilution Series.* The Discharger shall conduct tests at 40%, 20%, 10%, 5%, and 2%. The "%" represents percent effluent as discharged. Samples may be buffered using the biological buffer MOPS (3-(N-Morpholino)propanesulfonic Acid) to control pH drift and ammonia toxicity caused by increasing pH during the test.

2. Chronic Toxicity Reporting Requirements

   a. *Routine Reporting*. Toxicity test results for the current reporting period shall include, at a minimum, for each test:

      i. Sample date(s)

      ii. Test initiation date

      iii. Test species

      iv. End point values for each dilution (e.g., number of young, growth rate, percent survival)

      v. NOEC value(s) in percent effluent

      vi. IC15, IC25, IC40, and IC50 values (or EC15, EC25 ... etc.) as percent effluent

      vii. TUc values (100/NOEC, 100/IC25, or 100/EC25)

      viii. Mean percent mortality (±s.d.) after 96 hours in 100% effluent (if applicable)

      ix. NOEC and LOEC values for reference toxicant test(s)

      x. IC50 or EC50 value(s) for reference toxicant test(s)

      xi. Available water quality measurements for each test (pH, D.O., temperature, conductivity, hardness, salinity, ammonia)

   b. *Compliance Summary*. The results of the chronic toxicity testing shall be provided in the self-monitoring report and shall include a summary table of chronic toxicity data from at least eleven of the most recent samples. The information in the table shall include items listed above under 2.a, specifically item numbers i, iii, v, vi (IC25 or EC25), vii, and viii.

3. Chronic Toxicity Reduction Evaluation (TRE)

   a. *Prepare Generic TRE Work Plan.* To be ready to respond to toxicity events, the Discharger shall prepare a generic TRE work plan within 90 days of the effective date of this Order. The Discharger shall review and update the work plan as necessary to remain current and applicable to the discharge and discharge facilities.

   b. *Submit Specific TRE Work Plan.* Within 30 days of exceeding either trigger for accelerated monitoring, the Discharge shall submit to the Regional Water Board a TRE work plan, which should be the generic work plan revised as appropriate for this toxicity event after consideration of available discharge data.

   c. *Initiate TRE.* Within 30 days of the date of completion of the accelerated monitoring tests observed to exceed either trigger, the Discharger shall initiate a

TRE in accordance with a TRE work plan that incorporates any and all comments from the Executive Officer.

d. The TRE shall be specific to the discharge and be in accordance with current technical guidance and reference materials, including USEPA guidance materials. The TRE shall be conducted as a tiered evaluation process, such as summarized below:

   i. Tier 1 consists of basic data collection (routine and accelerated monitoring).

   ii. Tier 2 consists of evaluation of optimization of the treatment process, including operation practices and in-plant process chemicals.

   iii. Tier 3 consists of a toxicity identification evaluation (TIE).

   iv. Tier 4 consists of evaluation of options for additional effluent treatment processes.

   v. Tier 5 consists of evaluation of options for modifications of in-plant treatment processes.

   vi. Tier 6 consists of implementation of selected toxicity control measures, and follow-up monitoring and confirmation of implementation success.

e. The TRE may be ended at any stage if monitoring finds there is no longer consistent toxicity (complying with Effluent Limitations section IV.A.4).

f. The objective of the TIE shall be to identify the substance or combination of substances causing the observed toxicity. All reasonable efforts using currently available TIE methodologies shall be employed.

g. As toxic substances are identified or characterized, the Discharger shall continue the TRE by determining the source(s) and evaluating alternative strategies for reducing or eliminating the substances from the discharge. All reasonable steps shall be taken to reduce toxicity to levels consistent with chronic toxicity evaluation parameters.

h. Many recommended TRE elements parallel required or recommended efforts of source control, pollution prevention and storm water control programs. TRE efforts should be coordinated with such efforts. To prevent duplication of efforts, evidence of complying with requirements or recommended efforts of such programs may be acceptable to comply with TRE requirements.

i. The Regional Water Board recognizes that chronic toxicity may be episodic and identification of causes of and reduction of sources of chronic toxicity may not be successful in all cases. Consideration of enforcement action by the Regional Water Board will be based in part on the Discharger's actions and efforts to identify and control or reduce sources of consistent toxicity.

VI. LAND DISCHARGE MONITORING REQUIREMENTS

Not applicable.

VII. RECLAMATION MONITORING REQUIREMENTS

Not Applicable.

VIII. RECEIVING WATER MONITORING REQUIREMENTS – SURFACE WATER AND GROUNDWATER

A. Regional Monitoring Program

The Discharger shall continue to participate in the Regional Monitoring Program (RMP), which involves collection of data on pollutants and toxicity in water, sediment and biota of the Estuary. The Discharger's participation and support of the RMP is used in consideration of the level of receiving water monitoring required by this Order.

With each annual self-monitoring report, the Discharger shall document how it complies with Receiving Water Limitations V.A. This may include using discharge characteristics (e.g., mass balance with effluent data and closest RMP station), receiving water data, or a combination of both.

IX. LEGEND FOR MRP TABLES

Types of Samples

C-24 = composite sample, 24 hours
(includes continuous sampling, such as for flows)
C-X = composite sample, X hours
G = grab sample

Frequency of Sampling

Cont. = Continuous
Cont/D = Continuous monitoring & daily reporting
H = once each hour (at about hourly intervals)
W = once each week
2/W = Twice each week
4/W = four times each week
M = once each month
Q = once each calendar quarter (at about three month intervals)
1/2h = once every 2 hours
1/Y = once each calendar year
2/Y = twice each calendar year (at about 6 months intervals, once during dry season, once during wet season)

Parameter and Unit Abbreviations

BOD = Biochemical Oxygen Demand
TSS = Total Suspended Solids
mgd = Million gallons per day
MG = Million Gallons

mg/L	=	milligrams per liter
ml/L-hr	=	milliliters per liter, per hour
µg/L	=	Micrograms per liter
kg/d	=	kilograms per day
kg/mo	=	kilograms per month
MPN/100 ml	=	Most Probable Number per 100 milliliters
ppb	=	Parts per billion

X. OTHER MONITORING REQUIREMENTS

A. Pretreatment Requirements

The Discharger shall comply with the pretreatment requirements specified in Table E-6 for influent (A-001), effluent (E-001), and biosolids.

Table E-6. Pretreatment Monitoring Requirements (1)

Constituents/EPA Method	Influent	Effluent	Biosolids
VOC / 624(2)	2/Y	2/Y	
BNA / 625(3)	2/Y	2/Y	
Metals(4)	M	M	
O-Pest / 614(5)	N/A	N/A	
C-Pest / 632(6)	N/A	N/A	
Sludge			2/Y

(1) Influent and effluent monitoring conducted in accordance with tables E-3 and E-4 can be used to satisfy these pretreatment monitoring requirements.
(2) Volatile organic compounds.
(3) Base neutral, acid extractable compounds.
(4) Analyses for metals shall include arsenic, cadmium, selenium, copper, lead, mercury, nickel, silver, zinc, and total chromium.
(5) Organophosphate pesticides.
(6) Chlorinated pesticides.

B. Sludge Monitoring

The Discharger shall adhere to sludge monitoring requirements required by 40 CFR Part 503.

XI. REPORTING REQUIREMENTS

A. General Monitoring and Reporting Requirements

1. The Discharger shall comply with all Standard Provisions (Attachment D) related to monitoring, reporting, and recordkeeping.

B. Modifications to Part A of Self-Monitoring Program (Attachment G)

1. If any discrepancies exist between SMP Part A, August 1993 (**Attachment G**) and this MRP, this MRP prevails.

2. Sections C.3. and C.5 are satisfied by participation in the Regional Monitoring

Program.

3. Modify section F.4 as follows:

Self-Monitoring Reports

For each calendar month, a self-monitoring report (SMR) shall be submitted to the Regional Water Board in accordance with the requirements listed in Self-Monitoring Program, Part A. The purpose of the report is to document treatment performance, effluent quality and compliance with waste discharge requirements prescribed by this Order, as demonstrated by the monitoring program data and the Discharger's operation practices.

[And add at the end of section F.4 the following:]

g. If the Discharger wishes to invalidate any measurement, the letter of transmittal will include identification of the measurement suspected to be invalid and notification of intent to submit, within 60 days, a formal request to invalidate the measurement; the original measurement in question, the reason for invalidating the measurement, all relevant documentation that supports the invalidation (e.g., laboratory sheet, log entry, test results, etc.), and discussion of the corrective actions taken or planned (with a time schedule for completion), to prevent recurrence of the sampling or measurement problem.

h. Reporting Data in Electronic Format
The Discharger has the option to submit all monitoring results in an electronic reporting format approved by the Executive Officer. If the Discharger chooses to submit SMRs electronically, the following shall apply:

1) Reporting Method: The Discharger shall submit SMRs electronically via the process approved by the Executive Officer in a letter dated December 17, 1999, Official Implementation of Electronic Reporting System (ERS) and in the Progress Report letter dated December 17, 2000, or in a subsequently approved format that the Permit has been modified to include.

2) Monthly or Quarterly Reporting Requirements: For each reporting period (monthly or quarterly as specified in SMP Part B), an electronic SMR shall be submitted to the Regional Water Board in accordance with section F.4.a-g. above. However, until USEPA approves the electronic signature or other signature technologies, Dischargers that are using the ERS must submit a hard copy of the original transmittal letter, an ERS printout of the data sheet, a violation report, and a receipt of the electronic transmittal.

3) Annual Reporting Requirements: Dischargers who have submitted data using the ERS for at least one calendar year are exempt from submitting an annual report electronically, but a hard copy of the annual report shall be submitted according to section F.5 below.

C. Self Monitoring Reports (SMRs)

1. At any time during the term of this Order, the State or Regional Water Board may notify the Discharger to electronically submit Self-Monitoring Reports (SMRs) using the State Water Board's California Integrated Water Quality System (CIWQS) Program Web site (http://www.waterboards.ca.gov/ciwqs/index.html). Until such notification is given, the Discharger shall submit hard copy SMRs. The CIWQS Web site will provide additional directions for SMR submittal in the event there will be service interruption for electronic submittal.

2. The Discharger shall report in the SMR the results for all monitoring specified in this MRP under sections III through IX. The Discharger shall submit monthly and annual SMRs including the results of all required monitoring using USEPA-approved test methods or other test methods specified in this Order. If the Discharger monitors any pollutant more frequently than required by this Order, the results of this monitoring shall be included in the calculations and reporting of the data submitted in the SMR. Monthly SMRs shall be due on the 30th day following the end of each calendar month, covering samples collected during that calendar month; annual reports shall be due on February 1 following each calendar year.

3. Monitoring periods and reporting for all required monitoring shall be completed according to the following schedule:

Table E-7. Monitoring Periods and Reporting Schedule

Sampling Frequency	Monitoring Period Begins On…	Monitoring Period
Continuous	Day after permit effective date	All
Hourly	Day after permit effective date	Hourly
Daily	Day after permit effective date	Midnight through 11:59 PM or any 24-hour period that reasonably represents a calendar day for purposes of sampling.
Weekly	Sunday following permit effective date or on permit effective date if on a Sunday	Sunday through Saturday
Monthly	First day of calendar month following permit effective date or on permit effective date if that date is first day of the month	1st day of calendar month through last day of calendar month
Quarterly	Closest of January 1, April 1, July 1, or October 1 following (or on) permit effective date	January 1 through March 31 April 1 through June 30 July 1 through September 30 October 1 through December 31
Semiannually	Closest of January 1 or July 1 following (or on) permit effective date	January 1 through June 30 July 1 through December 31
Annually	January 1 following (or on) permit effective date	January 1 through December 31

4. Reporting Protocols. The Discharger shall report with each sample result the applicable Reporting Level (RL) and the current Method Detection Limit (MDL), as determined by the procedure in 40 CFR Part 136.

The Discharger shall report the results of analytical determinations for the presence of chemical constituents in a sample using the following reporting protocols:

a. Sample results greater than or equal to the RL shall be reported as measured by the laboratory (i.e., the measured chemical concentration in the sample).

b. Sample results less than the RL, but greater than or equal to the laboratory's MDL, shall be reported as "Detected, but Not Quantified" (DNQ) or "J" flagged. The estimated chemical concentration of the sample shall also be reported.

   For the purposes of data collection, the laboratory shall write the estimated chemical concentration next to DNQ as well as the words "Estimated Concentration" (may be shortened to "Est. Conc."). The laboratory may, if such information is available, include numerical estimates of the data quality for the reported result. Numerical estimates of data quality may be percent accuracy (± a percentage of the reported value), numerical ranges (low to high), or any other means considered appropriate by the laboratory.

c. Sample results less than the laboratory's MDL shall be reported as "Not Detected (ND) or <."

d. Dischargers are to instruct laboratories to establish calibration standards so that the ML value (or its equivalent if there is differential treatment of samples relative to calibration standards) is the lowest calibration standard. At no time is the Discharger to use analytical data derived from *extrapolation* beyond the lowest point of the calibration curve.

5. The Discharger shall submit SMRs in accordance with the following requirements:

   a. The Discharger shall arrange all reported data in a tabular format. The data shall be summarized to clearly illustrate whether the facility is operating in compliance with interim and/or final effluent limitations. The Discharger is not required to duplicate the submittal of data that is entered in a tabular format within CIWQS. When electronic submittal of data is required and CIWQS does not provide for entry into a tabular format within the system, the Discharger shall electronically submit the data in a tabular format as an attachment.

   b. The Discharger shall attach a cover letter to the SMR. The information contained in the cover letter shall clearly identify violations of the WDRs; discuss corrective actions taken or planned; and the proposed time schedule for corrective actions. Identified violations must include a description of the requirement that was violated and a description of the violation.

   c. SMRs must be submitted to the Regional Water Board, signed and certified as required by the Standard Provisions (Attachment D), to the address listed below:

      Executive Officer
      California Regional Water Quality Control Board
      San Francisco Bay Region
      1515 Clay Street, Suite 1400

Oakland, CA 94612
ATTN: NPDES Wastewater Division

D. Discharge Monitoring Reports (DMRs)

1. As described in section XI.B.1 above, at any time during the term of this Order, the State or Regional Water Board may notify the Discharger to electronically submit SMRs that will satisfy federal requirements for submittal of Discharge Monitoring Reports (DMRs). Until such notification is given, the Discharger shall submit DMRs in accordance with the requirements described below.

2. DMRs must be signed and certified as required by the standard provisions (Attachment D). The Discharge shall submit the original DMR and one copy of the DMR to the address listed below:

   State Water Resources Control Board
   Discharge Monitoring Report Processing Center
   PO Box 671
   Sacramento, CA 95812

3. All discharge monitoring results must be reported on the official USEPA pre-printed DMR forms (EPA Form 3320-1). Forms that are self-generated or modified will not be accepted.

E. Other Reports

Annual Reports. By February 1st of each year, the Discharger shall submit an annual report to the Regional Water Board covering the previous calendar year. The report shall contain the items described in Standard Provisions and Reporting Requirements, and SMP Part A, August 1993 (**Attachment G**).

APPENDIX E-1
CHRONIC TOXICITY
DEFINITION OF TERMS AND SCREENING PHASE REQUIREMENTS

I. Definition of Terms

A. No observed effect level (NOEL) for compliance determination is equal to IC_{25} or EC_{25}. If the IC_{25} or EC_{25} cannot be statistically determined, the NOEL shall be equal to the NOEC derived using hypothesis testing.

B. Effective concentration (EC) is a point estimate of the toxicant concentration that would cause an adverse effect on a quantal, "all or nothing," response (such as death, immobilization, or serious incapacitation) in a given percent of the test organisms. If the effect is death or immobility, the term lethal concentration (LC) may be used. EC values may be calculated using point estimation techniques such as probit, logit, and Spearman-Karber. EC_{25} is the concentration of toxicant (in percent effluent) that causes a response in 25 percent of the test organisms.

C. Inhibition concentration (IC) is a point estimate of the toxicant concentration that would cause a given percent reduction in a nonlethal, nonquantal biological measurement, such as growth. For example, an IC_{25} is the estimated concentration of toxicant that would cause a 25 percent reduction in average young per female or growth. IC values may be calculated using a linear interpolation method such as USEPA's Bootstrap Procedure.

D. No observed effect concentration (NOEC) is the highest tested concentration of an effluent or a toxicant at which no adverse effects are observed on the aquatic test organisms at a specific time of observation. It is determined using hypothesis testing.

II. Chronic Toxicity Screening Phase Requirements

A. The Discharger shall perform screening phase monitoring:

1. Subsequent to any significant change in the nature of the effluent discharged through changes in sources or treatment, except those changes resulting from reductions in pollutant concentrations attributable to source control efforts, or

2. Prior to permit reissuance. Screening phase monitoring data shall be included in the NPDES permit application for reissuance. The information shall be as recent as possible, but may be based on screening phase monitoring conducted within 5 years before the permit expiration date.

B. Design of the screening phase shall, at a minimum, consist of the following elements:

1. Use of test species specified in **Appendix E-2**, attached, and use of the protocols referenced in those tables, or as approved by the Executive Officer.

2. Two stages:

   a. Stage 1 shall consist of a minimum of one battery of tests conducted concurrently. Selection of the type of test species and minimum number of tests shall be based on **Appendix E-2** (attached).

   b. Stage 2 shall consist of a minimum of two test batteries conducted at a monthly frequency using the three most sensitive species based on the Stage 1 test results and as approved by the Executive Officer.

3. Appropriate controls.

4. Concurrent reference toxicant tests.

5. Dilution series 100%, 50%, 25%, 10%, 5%, 0 %, where "%" is percent effluent as discharged, or as otherwise approved the Executive Officer.

C. The Discharger shall submit a screening phase proposal acceptable to the Executive Officer. The proposal shall address each of the elements listed above. If within 30 days, the Executive Officer does not comment, the Discharge shall commence with screening phase monitoring.

APPENDIX E-2
SUMMARY OF TOXICITY TEST SPECIES REQUIREMENTS

Critical Life Stage Toxicity Tests for Estuarine Waters

Species	(Scientific Name)	Effect	Test Duration	Reference
Alga	*(Skeletonema costatum)* *(Thalassiosira pseudonana)*	Growth rate	4 days	1
Red alga	*(Champia parvula)*	Number of cystocarps	7–9 days	3
Giant kelp	*(Macrocystis pyrifera)*	Percent germination; germ tube length	48 hours	2
Abalone	*(Haliotis rufescens)*	Abnormal shell development	48 hours	2
Oyster Mussel	*(Crassostrea gigas)* *(Mytilus edulis)*	Abnormal shell development; percent survival	48 hours	2
Echinoderms - Urchins Sand dollar	*(Strongylocentrotus purpuratus, S. franciscanus)* *(Dendraster excentricus)*	Percent fertilization	1 hour	2
Shrimp	*(Mysidopsis bahia)*	Percent survival; growth	7 days	3
Shrimp	*(Holmesimysis costata)*	Percent survival; growth	7 days	2
Topsmelt	*(Atherinops affinis)*	Percent survival; growth	7 days	2
Silversides	*(Menidia beryllina)*	Larval growth rate; percent survival	7 days	3

Toxicity Test References:

1. American Society for Testing Materials (ASTM). 1990. Standard Guide for Conducting Static 96-Hour Toxicity Tests with Microalgae. Procedure E 1218-90. ASTM, Philadelphia, PA.

2. Short-term Methods for Estimating the Chronic Toxicity of Effluent and Receiving Waters to West Coast Marine and Estuarine Organisms. EPA/600/R-95/136. August 1995.

3. Short-term Methods for Estimating the Chronic Toxicity of Effluent and Receiving Waters to Marine and Estuarine Organisms. EPA/600/4-90/003. July 1994. Later editions may replace this version.

Critical Life Stage Toxicity Tests for Fresh Waters

Species	(Scientific Name)	Effect	Test Duration	Reference
Fathead minnow	*(Pimephales promelas)*	Survival; growth rate	7 days	4
Water flea	*(Ceriodaphnia dubia)*	Survival; number of young	7 days	4
Alga	*(Selenastrum capricornutum)*	Cell division rate	4 days	4

Toxicity Test Reference:

4. Short-term Methods for Estimating the Chronic Toxicity of Effluents and Receiving Waters to Freshwater Organisms, third edition. EPA/600/4-91/002. July 1994. Later editions may replace this version.

Toxicity Test Requirements for Stage One Screening Phase

Requirements	Receiving Water Characteristics		
	Discharges to Coast	Discharges to San Francisco Bay[2]	
	Ocean	Marine/Estuarine	Freshwater
Taxonomic diversity	1 plant 1 invertebrate 1 fish	1 plant 1 invertebrate 1 fish	1 plant 1 invertebrate 1 fish
Number of tests of each salinity type: Freshwater[1] Marine/Estuarine	0 4	1 or 2 3 or 4	3 0
Total number of tests	4	5	3

[1] The freshwater species may be substituted with marine species if:
(a) The salinity of the effluent is above 1 part per thousand (ppt) greater than 95 percent of the time, or
(b) The ionic strength (TDS or conductivity) of the effluent at the test concentration used to determine compliance is documented to be toxic to the test species.

[2] (a) Marine/Estuarine refers to receiving water salinities greater than 1 ppt at least 95 percent of the time during a normal water year.
(b) Fresh refers to receiving water with salinities less than 1 ppt at least 95 percent of the time during a normal water year.

ATTACHMENT F - FACT SHEET

Table of Contents

I. Permit Information 3
II. Facility Description 4
A. Description of Wastewater Treatment or Controls 4
B. Discharge Points and Receiving Waters 5
C. Summary of Existing Requirements and Self-Monitoring Report (SMR) Data 6
D. Compliance Summary 7
E. Planned Changes 7
III. Applicable Plans, Policies, and Regulations 7
A. Legal Authorities 8
B. California Environmental Quality Act (CEQA) 8
C. State and Federal Regulations, Policies, and Plans 8
D. Impaired Water Bodies on CWA 303(d) List 11
E. Other Plans, Polices and Regulations 12
IV. Rationale For Effluent Limitations and Discharge Specifications 12
A. Discharge Prohibitions 13
B. Technology-based Effluent Limitations 15
1. Scope and Authority 15
2. Applicable Technology-Based Effluent Limitations 15
3. Bacteria 16
C. Water Quality-Based Effluent Limitations (WQBELs) 17
D. Compliance Schedule 36
E. Land Discharge Specifications 37
F. Reclamation Specifications 37
V. Rationale for Receiving Water Limitations 37
VI. Rationale for Monitoring and Reporting Requirements 37
A. Influent Monitoring 38
B. Effluent Monitoring 38
C. Bypasses or Sewer Overflow Monitoring 38
D. Whole Effluent Toxicity Testing Requirements 38
E. Receiving Water Monitoring 38
1. Regional Monitoring Program 38
2. Monitoring Location – Receiving Waters RSW-001 39
F. Other Monitoring Requirements 39
VII. Rationale for Provisions 39
A. Standard Provisions (Provision VI.A) 39
B. Monitoring and Reporting Requirements (Provision VI.B) 39
C. Special Provisions (Provision VI.C) 39
1. Reopener Provisions 39
2. Special Studies, Technical Reports and Additional Reporting Requirements 39
3. Best Management Practices and Pollutant Minimization Program 40
4. Construction, Operation, and Maintenance Specifications 40
5. Special Provisions for POTWs 41
6. Nearshore Outfall 41
7. Wet Weather Blending 41
8. Compliance Schedule for Dioxin-TEQ 42

9. Action Plan for Cyanide 42
10. Action Plan for Copper 43
VIII. Public Participation 43
A. Notification of Interested Parties 43
B. Written Comments 43
C. Public Hearing 43
D. Waste Discharge Requirements Petitions 44
E. Information and Copying 44
F. Register of Interested Persons 44
G. Additional Information 44
IX. Appendices 45

List of Tables

Table F-1. Facility Information 3
Table F-2. Outfall Location 6
Table F-3. Historic Effluent Limitations and Monitoring Data for E-001 6
Table F-4. Historic Toxic Pollutants Effluent Limitations and Monitoring Data for E-001 6
Table F-5. Toxicity Limitations and Monitoring Data for E-001 7
Table F-6. Numeric Effluent Exceedances 7
Table F-7. Basin Plan Beneficial Uses 8
Table F-8. Summary of Technology-based Effluent Limitations 16
Table F-9. Reasonable Potential Analysis Summary 22
Table F-10. Water Quality Criteria/Objectives for Toxics 26

ATTACHMENT F – FACT SHEET

As described in section II of this Order, this Fact Sheet includes the legal requirements and technical rationale that serve as the basis for the requirements of this Order.

I. PERMIT INFORMATION

The following table summarizes administrative information related to the Facility.

Table F-1. Facility Information

WDID	2 417005001
Discharger	City of Burlingame and North Bayside System Unit
Name of Facility	City of Burlingame Wastewater Treatment Facility
Facility Address	1103 Airport Boulevard
	Burlingame, CA 94010
	San Mateo County
Facility Contact, Title and Phone	William Toci, Plant Manager (650) 342-3727
Authorized Person to Sign and Submit Reports	William Toci, Plant Manager
Mailing Address	501 Primrose Road Burlingame, CA 94010
Billing Address	Same as Mailing Address
Type of Facility	POTW
Major or Minor Facility	Major
Threat to Water Quality	2
Complexity	A
Pretreatment Program	Yes
Reclamation Requirements	None
Facility Permitted Flow	5.5 million gallons per day (mgd) average dry weather flow
Facility Design Flow	5.5 mgd (current dry weather average design flow) 16 mgd (design wet weather peak flow)
Watershed	San Francisco Bay
Receiving Water	Lower San Francisco Bay
Receiving Water Type	Marine

A. The City of Burlingame owns and Veolia West Operating Service Inc. operates the City of Burlingame Wastewater Treatment Facility (Facility).

For the purposes of this Order, references to the "discharger" or "permittee" in applicable federal and state laws, regulations, plans, or policy are held to be equivalent to references to the Discharger herein.

B. The Facility discharges treated wastewater into the deep-water channel of Lower San Francisco Bay, a water of the United States, and is currently regulated by Order No. R2-2002-0027 and NPDES Permit No. CA0037788, which was adopted on February 27, 2002.

The terms and conditions of the 2002 Order have been automatically continued past the Order's original expiration date of January 1, 2007 and remain in effect until new Waste Discharge Requirements (WDRs) and NPDES permit are adopted pursuant to this Order.

C. The Discharger filed a Report of Waste Discharge and submitted an application for renewal of its WDRs and NPDES permit on May 24, 2006. The application was deemed complete on June 16, 2006. The application was deemed complete on June 16, 2006.

II. FACILITY DESCRIPTION

A. Description of Wastewater Treatment or Controls

The Discharger owns and Veolia West Operating Service Inc. operates the municipal Facility, a secondary wastewater treatment facility and its collection system. The Facility provides secondary level treatment for domestic and commercial wastewater from a service area with a population of approximately 37,000. The cities of Burlingame (population 30,000) and Hillsborough (6,000), and unincorporated areas of San Mateo County (1,000) contribute to influent flows to the Facility.

Treated, disinfected wastewater is discharged from Monitoring Location E-001 to the North Bayside System Unit (NBSU) force main. Wastewater flow at E-001, as identified by this Order, represents the Facility discharge prior to combining with the NBSU effluent. The members of NBSU are the cities of Millbrae, South San Francisco, and San Bruno, and San Francisco International Airport. Treated, disinfected wastewater collected by the NBSU is dechlorinated at the City of South San Francisco Water Quality Control Plant, and the combined effluent is discharged through a submerged diffuser into the deep-water channel of Lower San Francisco Bay, a water of the State and the United States. The diffuser is approximately 5,300 feet offshore at a depth of 20 feet below mean lower low water and is located northeast of Point San Bruno (at Latitude 37 degrees, 39 minutes, 55 seconds N and Longitude 122 degrees, 21 minutes, 41 seconds W). A second outfall (at Latitude 37 degrees, 39 minutes, 32 seconds N and Longitude 122 degrees, 21 minutes, 15 seconds W) is used by the Discharger for emergency discharges during storm events. This outfall is a shallow-water, nearshore discharge via a gated weir just off the Discharger's final clarifier "B" after final chlorine contact. The nearshore discharge has been used four times since 2002 (December 13, 2002, December 16, 2002, January 1, 2004, and December 31, 2005). The duration of the discharge was typically no longer than 12 hours, with the average discharge volume being 2.26 million gallons and the maximum being 3.7 million gallons. This Order does not permit the discharge of wastewater through the nearshore outfall and includes a provision requiring the Discharger to eliminate discharge from this outfall.

The Discharger has an average dry weather flow design capacity of 5.5 million gallons per day (mgd), and can treat up to 16 mgd during wet weather. In 2005, the Facility discharged an average dry weather flow of 3.56 mgd, had an average wet weather discharge of about 11 mgd and an annual average flow of about 4.4 mgd (2004 and 2005 data). The Discharger has a primary treatment capacity of 25 mgd and disinfection capacity of 20 mgd. During wet weather operations, the aeration basins and secondary clarifiers may be bypassed, with the final effluent being a blend of disinfected, primary-treated effluent and disinfected, secondary-treated effluent. Blending is done to avoid

hydraulic overload of the activated sludge process and associated solids inventory washout. The discharge is classified by the U.S. Environmental Protection Agency (USEPA) and the Regional Water Board as a deepwater discharge.

The wastewater treatment process at the Facility consists of screening, grit removal, primary clarification (2 primary clarifiers), activated sludge biological treatment (4 aeration basins), secondary clarification (4 secondary clarifiers), and disinfection with sodium hypochlorite. Treated effluent flows via pipeline to the NBSU dechlorination facility. In transit or at the NBSU dechlorination facility, treated effluent is combined with effluent from the cities of Millbrae, South San Francisco, and San Bruno and industrial and sanitary wastewater from the San Francisco International Airport. The combined effluent is dechlorinated prior to discharge to Lower San Francisco Bay.

The Discharger recently completed a $10 million "Reliability Project." These upgrades included:

- New sludge de-watering building
- New sludge transfer station
- New diffusers in the aeration basins
- New aeration blower system with automated equipment
- New waste gas burners
- Head works odor control improvement
- New compactors (bar screens)
- New vacuum truck unloading stations

A portion of the storm water captured within the wastewater treatment plant storm drain system is directed to the headworks of the treatment plant and treated to the standards contained in this Order; therefore, the facility will continue to operate under the General Industrial Storm Water Permit No. CAS000001.

Biosolids collected from the wastewater treatment process undergo thickening in a gravity thickener, are anaerobically digested and stabilized in an anaerobic digester, and dewatered by a belt filter press. In 2005, the Facility generated 665 dry metric tons of Class B biosolids, and 181 dry metric tons of dewatered biosolids were disposed of at the Potrero Hills Landfill in Suisun City, California. The Discharger currently contracts through its agent, Veolia West Operating Service Inc., to have the remaining 484 dry metric tons of dewatered biosolids hauled and land applied by SynaGro West, Inc., its contract land applier. Under the terms of that contract, SynaGro is responsible for complying with the monitoring and reporting requirements of the 40 CFR 503 regulations for the biosolids and files annual reports with USEPA Region IX.

B. Discharge Points and Receiving Waters

The locations of the Facility's outfall and its receiving water are shown in Table F-2 below.

Table F-2. Outfall Location

Discharge Point	Effluent Description	Discharge Point Latitude	Discharge Point Longitude	Receiving Water
E-002	Secondary Treated POTW Effluent	37º, 35.5', 29" N	122 º, 21', 43.9" W	Lower San Francisco Bay

Lower San Francisco Bay is located in the South Bay Basin watershed management area, between the Dumbarton Bridge to the south and the San Francisco-Oakland Bay Bridge to the north.

C. Summary of Existing Requirements and Self-Monitoring Report (SMR) Data

Effluent limitations contained in Order No. R2-2002-0027 for discharges from the Facility outfall and representative monitoring data from the term of the previous Order are as follows:

Table F-3. Historic Effluent Limitations and Monitoring Data for E-001

Parameter	(units)	Effluent Limitations			Monitoring Data (From 1/02 To 9/06)	
		Monthly Average	Weekly Average	Instantaneous Maximum	Mean Discharge	Maximum Discharge
Flow Rate	mgd	---	---	---	4.24 (Daily Avg.)	20 (Daily Max.)
BOD_5	mg/L	30	45	--	8.08	70
TSS	mg/L	30	45	--	17.3	274
Settleable Matter	ml/L-hr	0.1	--	0.2 (Daily Max.)	0.1	0.125
Oil & Grease	mg/l	10	--	20 (Daily Max.)	2.7	8
pH	pH units	6.0 to 9.0			6.63 (min.)	8.02 (max.)
Fecal Coliform	MPN/100 ml	5-day Geometric mean = 200 10-sample 90th percentile = 400			5-day Geometric mean (max) = 26.7 10-sample 90th percentile (max) = 30	

Table F-4. Historic Toxic Pollutants Effluent Limitations and Monitoring Data for E-001

Parameter	Units	Water Quality-Based Effluent Limits (WQBELs)		Interim Limits		Monitoring Data (From 1/02 To 12/05)	
		Daily Maximum	Monthly Average	Daily Maximum	Monthly Average	Mean Daily Discharge	Maximum Daily Discharge
Copper	µg/L	---	---	---	27.0	7.9	38
Mercury	µg/L	---	---	---	0.087	0.009	0.086
Nickel	µg/L	64	32.7	---	---	3.72	6.6
Silver	µg/L	21.8	11.8	---	---	0.37	2.1
Zinc	µg/L	691	496	---	---	32.8	60
Cyanide	µg/L	---	---	10	---	3.7	26
Alpha-BHC	µg/L	---	---	---	0.04	<0.004	<0.004
4,4-DDE	µg/L	0.00119	0.00059	---	---	<0.001	<0.001
Dieldrin	µg/L	---	---	---	0.075	<0.002	<0.002

Table F-5. Toxicity Limitations and Monitoring Data for E-001

Species	Units	Effluent Toxicity Limits & Monitoring Data(1)			
		Acute		Chronic	
		11-sample median	11-sample 90th percentile	3-sample median	Single sample max.
Pimephales promelas	% Survival	≥ 90	≥ 70	---	---
		94.7	91.4	---	---
Mysidopsis bahia	TU_c	---	---	≤ 10	≤ 20
		---	---	5.2	6

(1) For each species, the effluent toxicity limit is listed in the top row and monitoring data are listed in the bottom row.

D. Compliance Summary

1. **Compliance with Numeric Effluent Limits.** Exceedances of numeric effluent limits were observed during the permit term for TSS, copper, and cyanide. The exceedances are outlined below:

Table F-6. Numeric Effluent Exceedances

Date of Violation	Exceeded Parameter	Units	Effluent Limitation	Reported Concentration
August 31, 2002	Copper – Monthly Average	µg/L	27	38
June 19, 2003	Cyanide – Daily Maximum	µg/L	10	13
December 27, 2003	Total Suspended Solids – Weekly Average	mg/L	45	52.03
May 4, 2005	Cyanide – Daily Maximum	µg/L	10	26
August 3, 2005	Cyanide – Daily Maximum	µg/L	10	18

The Regional Water Board has taken enforcement actions on these violations. The latest action was for the assessment of maximum minimum penalties in Order R2-2007-0050. Since changing analytical methods, cyanide results have all been below 10 µg/L.

2. **Compliance with Submittal of Self-Monitoring Reports.** The Discharger submitted all Self-Monitoring Reports on or before the due date during the term of Order No. R2-2002-0027.

E. Planned Changes

The Discharger recently completed a Reliability Project designed to upgrade existing equipment and reduce the need to blend. The Discharger plans to construct a 660,000 gallon retention basin to further reduce the need to blend.

III. APPLICABLE PLANS, POLICIES, AND REGULATIONS

The requirements contained in the proposed Order are based on the requirements and authorities described in this section.

A. Legal Authorities

This Order is issued pursuant to CWA section 402 and implementing regulations adopted by the USEPA and Chapter 5.5, Division 7 of the CWC (commencing with section 13370). It shall serve as an NPDES permit for point source discharges from this facility to surface waters. This Order also serves as Waste Discharge Requirements (WDRs) pursuant to CWC Article 4, Chapter 4, Division 7 (commencing with section 13260).

B. California Environmental Quality Act (CEQA)

Under CWC section 13389, this action to adopt an NPDES permit is exempt from the provisions of CEQA.

C. State and Federal Regulations, Policies, and Plans

1. **Water Quality Control Plans.** *The Water Quality Control Plan for the San Francisco Bay Basin* (the Basin Plan) is the Regional Water Board's master water quality control planning document. It designates beneficial uses and water quality objectives for waters of the State, including surface waters and groundwater. It also includes programs of implementation to achieve water quality objectives. The Basin Plan was duly adopted by the Regional Water Board and approved by the State Water Resources Control Board, USEPA, and the Office of Administrative Law, as required. The Basin Plan implements State Water Resources Control Board (State Water Board) Resolution No. 88-63, which establishes state policy that all waters, with certain exceptions, should be considered suitable or potentially suitable for municipal or domestic supply (MUN). Because of the marine influence on receiving waters of the San Francisco Bay, total dissolved solids levels in the Bay commonly (and often significantly) exceed 3,000 mg/L and thereby meet an exception to State Water Board Resolution No. 88-63. Therefore, the designation MUN is not applicable to the Lower San Francisco Bay. Beneficial uses applicable to Lower San Francisco Bay are as follows:

Table F-7. Basin Plan Beneficial Uses

Discharge Point	Receiving Water Name	Beneficial Use(s)
E-002	Lower San Francisco Bay	Industrial Service Supply (IND) Navigation (NAV) Water Contact Recreation (REC1) Non-Contact Water Recreation (REC2) Ocean, Commercial and Sport Fishing (COMM) Wildlife Habitat (WILD) Preservation of Rare and Endangered Species (RARE) Fish Migration (MIGR) Shellfish Harvesting (SHELL) Estuarine Habitat (EST)

Requirements of this Order implement the Basin Plan.

2. **National Toxics Rule (NTR) and California Toxics Rule (CTR).** USEPA adopted the NTR on December 22, 1992, which was amended on May 4, 1995, and

November 9, 1999. About forty criteria in the NTR applied in California. On May 18, 2000, USEPA adopted the CTR. The CTR promulgated new toxics criteria for California and, in addition, incorporated the previously adopted NTR criteria that were applicable in the state. The CTR was amended on February 13, 2001. These rules contain water quality criteria for priority toxic pollutants, which are applicable to the Lower San Francisco Bay.

3. **State Implementation Policy.** On March 2, 2000, State Water Board adopted the *Policy for Implementation of Toxics Standards for Inland Surface Waters, Enclosed Bays, and Estuaries of California* (State Implementation Policy or SIP*).* The SIP became effective on April 28, 2000, with respect to the priority pollutant criteria promulgated for California by the USEPA through the NTR and to the priority pollutant objectives established by the Regional Water Board in the Basin Plan. The SIP became effective on May 18, 2000 with respect to the priority pollutant criteria promulgated by the USEPA through the CTR. The State Water Board adopted amendments to the SIP on February 24, 2005 that became effective on July 13, 2005. The SIP establishes implementation provisions for priority pollutant criteria and objectives and provisions for chronic toxicity control. Requirements of this Order implement the SIP.

4. **Alaska Rule.** On March 30, 2000, USEPA revised its regulation that specifies when new and revised state and tribal water quality standards (WQS) become effective for CWA purposes [40 C.F.R. § 131.21, 65 Fed. Reg. 24641 (April 27, 2000)]. Under the revised regulation (also known as the Alaska Rule), new and revised standards submitted to USEPA after May 30, 2000, must be approved by USEPA before being used for CWA purposes. The final rule also provides that standards already in effect and submitted to USEPA by May 30, 2000, may be used for CWA purposes, whether or not approved by USEPA.

5. **Stringency of Requirements for Individual Pollutants.** This Order contains restrictions on individual pollutants that are no more stringent than required by the federal CWA. Individual pollutant restrictions consist of technology-based restrictions and water quality-based effluent limitations. The technology-based effluent limitations consist of restrictions on BOD, TSS, oil and grease, pH, and chlorine residual. Restrictions on these pollutants are specified in federal regulations and are no more stringent than required by the CWA. WQBELs have been scientifically derived to implement water quality objectives that protect beneficial uses. Both the beneficial uses and the water quality objectives have been approved pursuant to federal law and are the applicable federal water quality standards. To the extent that toxic pollutant WQBELs were derived from the CTR, the CTR is the applicable standard pursuant to section 131.38. The scientific procedures for calculating the individual WQBELs are based on the CTR-SIP, which was approved by USEPA on May 18, 2000. Most beneficial uses and water quality objectives contained in the Basin Plan were approved under state law and submitted to and approved by USEPA prior to May 30, 2000. Any water quality objectives and beneficial uses submitted to USEPA prior to May 30, 2000, but not approved by USEPA before that date, are nonetheless “applicable water quality standards for purposes of the CWA” pursuant to section 131.21(c)(1). The remaining water quality objectives and beneficial uses implemented by this Order were approved by USEPA on January 5, 2005, and are applicable water quality standards

pursuant to section 131.21(c)(2). Collectively, this Order's restrictions on individual pollutants are no more stringent than required to implement the technology-based requirements of the CWA and the applicable water quality standards for purposes of the CWA.

6. **Antidegradation Policy.** 40 CFR 131.12 requires that State water quality standards include an antidegradation policy consistent with the Federal policy. The State Water Board established California's antidegradation policy in State Water Board Resolution No. 68-16, which incorporates the requirements of the federal antidegradation policy. Resolution 68-16 requires that existing water quality is maintained unless degradation is justified based on specific findings.

   The permitted discharge is consistent with the antidegradation provision of 40 CFR §131.12 and State Water Board Resolution No. 68-16, and the final limitations in this Order are in compliance with antidegradation requirements and meet the requirements of the SIP because these limits hold the Discharger to performance levels that will not cause or contribute to water quality impairment or further water quality degradation. This is because this Order does not provide for an increase in the permitted design flow, allow for a reduction in the level of treatment, or increase effluent limitations, with the exception of cyanide and copper.

   For cyanide, the revised limits will not degrade water quality because the permitted flow will remain unchanged and the level of treatment provided by the Facility will not be reduced. The new limits are equivalent to those anticipated in the antidegradation analysis section of the Staff Report supporting the cyanide site-specific objectives. Documentation completed for the standards setting process for cyanide addressed antidegradation. That analysis concluded that these new limits would not likely result in degradation and that any increase would not have a measurable impact on ambient cyanide levels in the Bay. Since the limits anticipated with the site-specific objectives would not degrade the quality of the receiving water, neither will the increased limits in this permit. As such there will be no lowering of water quality beyond the current level authorized in the previous permit, which is the baseline by which to measure whether degradation will occur. Moreover, this Order requires implementation of an action plan for cyanide source identification and pollution minimization. These measures will further ensure that existing water quality is maintained or improved.

   For copper, this Order establishes final WQBELs, whereas the previous permit included interim limits. Although the final WQBELs are above the previous interim limitations, the concentration of copper discharges is unlikely to change because the Discharger proposes no changes to its treatment process. The Discharger will maintain current treatment performance for copper because it cannot manipulate its process to adjust effluent copper levels independently of other treatment parameters. To maintain compliance with other effluent limits, the Discharger will maintain its current performance with respect to copper. Moreover, pollution minimization requirements are designed to maintain current performance. Additionally, this Order establishes alternate limits for copper based on site-specific objectives developed since the previous permit. These limits will become effective if the site-specific objective is adopted during the permit term. Like cyanide, the

standards setting process for copper addressed antidegradation, and therefore, an analysis in this permit is unnecessary.

The Order continues the status quo with respect to the level of discharge authorized in the previous permit and thus there will be no change in water quality beyond the level that was authorized in the last permit. Findings authorizing degradation are thus not applicable.

7. **Anti-Backsliding Requirements.** CWA Sections 402(o)(2) and 303(d)(4) and NPDES regulations at 40 CFR 122.44(l) prohibit backsliding in NPDES permits. These anti-backsliding provisions require that effluent limitations in a reissued permit must be as stringent as those in the previous Order, with some exceptions in which limitations may be relaxed. All effluent limitations in this Order are at least as stringent as the effluent limitations in the previous Order.

D. Impaired Water Bodies on CWA 303(d) List

In November 2006, the USEPA approved a revised list of impaired water bodies prepared by the State [hereinafter referred to as the 303(d) list], prepared pursuant to provisions of CWA section 303(d), which requires identification of specific water bodies where it is expected that water quality standards will not be met after implementation of technology-based effluent limitations on point sources. Lower San Francisco Bay is listed as impaired by chlordane, DDT, dieldrin, dioxin compounds, exotic species, furan compounds, mercury, PCBs, and dioxin-like PCBs. The SIP requires final effluent limitations for all 303(d)-listed pollutants to be consistent with total maximum daily loads and associated waste load allocations.

1. Total Maximum Daily Loads

The Regional Water Board plans to adopt Total Maximum Daily Loads (TMDLs) for pollutants on the 303(d) list in Lower San Francisco Bay within the next ten years. Future review of the 303(d)-list for Lower San Francisco Bay may provide schedules or result in revision of the schedules for adoption of TMDLs.

2. Waste Load Allocations

The TMDLs will establish waste load allocations (WLAs) for point sources and load allocations (LAs) for non-point sources, and will result in achieving the water quality standards for the waterbodies. Final WQBELs for 303(d)-listed pollutants in this discharge will be based on WLAs contained in the respective TMDLs.

3. Implementation Strategy

The Regional Water Board's strategy to collect water quality data and to develop TMDLs is summarized below:

a. **Data Collection.** The Regional Water Board has given dischargers to San Francisco Bay the option to collectively assist in developing and implementing analytical techniques capable of detecting 303(d)-listed pollutants to at least their respective levels of concern or WQOs/WQC. This collective effort may include

development of sample concentration techniques for approval by the USEPA. The Regional Water Board will require dischargers to characterize the pollutant loads from their facilities into the water-quality limited waterbodies. The results will be used in the development of TMDLs and may be used to update or revise the 303(d) list or change the WQOs/WQC for the impaired waterbodies including Lower San Francisco Bay.

b. **Funding Mechanism.** The Regional Water Board has received, and anticipates continuing to receive, resources from Federal and State agencies for TMDL development. To ensure timely development of TMDLs, the Regional Water Board intends to supplement these resources by allocating development costs among dischargers through the RMP or other appropriate funding mechanisms.

E. Other Plans, Polices and Regulations

This Order is also based on the following plans, polices, and regulations:

1. Federal *Water Pollution Control Act*, Sections 301 through 305, and 307, and amendments thereto, as applicable (CWA);

2. State Water Board's *Policy for* the USEPA's May 18, 2000 *Water Quality Standards; Establishment of Numeric Criteria for Priority Toxic Pollutants for the State of California* or CTR, 40 C.F.R. §131.38(b) and amendments,;

3. USEPA's *Quality Criteria for Water* [EPA 440/5-86-001, 1986] and subsequent amendments (the USEPA Gold Book);

4. Applicable Federal Regulations [40 CFR §§ 122 and 131];

5. 40 CFR §131.36(b) and amendments [Federal Register Volume 60, Number 86, 4 May 1995, pages 22229-22237];

6. USEPA's December 10, 1998 National Recommended Water Quality Criteria compilation [Federal Register Vol. 63, No. 237, pp. 68354-68364];

7. USEPA's December 27, 2002 Revision of National Recommended Water Quality Criteria compilation [Federal Register Vol. 67, No. 249, pp. 79091-79095]; and

8. Guidance provided with State Water Board Orders remanding permits to the Regional Water Board for further consideration.

IV. RATIONALE FOR EFFLUENT LIMITATIONS AND DISCHARGE SPECIFICATIONS

The CWA requires point source dischargers to control the amount of conventional, non-conventional, and toxic pollutants that are discharged into the waters of the United States. The control of pollutants discharged is established through effluent limitations and other requirements in NPDES permits. There are two principal bases for effluent limitations in the NPDES regulations: 40 CFR 122.44(a) requires that permits include applicable technology-based limitations and standards; and 40 CFR 122.44(d) requires that permits include water quality-based effluent limitations (WQBELs) to attain and maintain applicable

numeric and narrative water quality criteria to protect the beneficial uses of the receiving water. Where reasonable potential has been established for a pollutant, but there is no numeric criterion or objective for the pollutant, WQBELs may be established using: (1) USEPA criteria guidance under CWA section 304(a), supplemented where necessary by other relevant information; (2) an indicator parameter for the pollutant of concern; or (3) a calculated numeric water quality criterion, such as a proposed state criterion or policy interpreting the state's narrative criterion, supplemented with other relevant information, as provided in 40 CFR 122.44(d)(1)(vi).

Several specific factors affecting the development of limitations and requirements in this Order are discussed as follows.

A. Discharge Prohibitions

1. **Discharge Prohibitions III.A (No discharge other than that described in this Order):** This prohibition is the same as in the previous permit and is based on CWC section 13260, which requires filing a Report of Waste Discharge before discharges can occur. Discharges not described in the,Report of Waste Discharge and subsequently in the Order, are prohibited.

2. **Discharge Prohibition III.B. (average dry weather flow not to exceed dry weather design capacity)**: This prohibition is based on the historic and tested reliable treatment capacity of the wastewater treatment facility. Exceedance of the treatment plant's average dry weather flow design capacity of 5.5 mgd may result in lowering the reliability of achieving compliance with water quality requirements.

3. **Discharge Prohibitions III.C (No discharge receiving less than 10:1 dilution):** This prohibition is the same as in the previous permit and is based on Discharge Prohibition No. 1 from Table 4-1 of the Basin Plan, which prohibits discharges that do not receive a minimum 10:1 initial dilution. Further, this Order allows a 10:1 dilution credit in the calculation of some WQBELs, and these limits would not be protective of water quality, if the discharge did not actually achieve a 10:1 minimum initial dilution.

4. **Discharge Prohibition III.D. (No bypasses except under the conditions at 40 CFR 122.41(m)(4)(i)(A), (B), and (C)):** This prohibition grants bypass of peak wet weather flows above 13 MGD when recombined with secondary treatment flows and discharged at the combined outfall in accordance with the conditions at 40 CFR 122.41(m)(4)(i)(A)-(C).

   Background
   During significant storm events, high influent flows can overwhelm certain parts of the wastewater treatment process and may cause damage or failure of the system. Operators of wastewater treatment plants must manage these high flows to both ensure the continued operation of the treatment process and to prevent backups and overflows of raw wastewater in basements or on city streets. USEPA recognizes that peak wet weather flow diversions around secondary treatment units (blending) at POTW treatment plants serving separate sanitary sewer conveyance systems may be necessary in some circumstances.

In December 2005, USEPA invited public comment on a proposed Peak Wet Weather Policy that interprets 40 CFR 122.41(m) to apply to wet weather diversions recombined with flow from secondary treatment, and provides guidance, regarding when the Regional Water Board may approved blending in an NPDES permit. The draft policy requires that dischargers must meet all the requirements of NPDES permits, and encourages municipalities to make investments in ongoing maintenance and capital improvements to improve their system's long-term performance. While USPEA has not formally adopted the draft policy, the proposal is a useful tool for Regional Water Board consideration.

Criteria of 40 CFR 122.41(m)(4)(i)(A)-(C)

If the criteria of 40 CFR 122.41(m)(4)(i)(A)-(C) are met, the Regional Water Board can approve wet weather diversions that are recombined with flow from secondary treatment. The criteria of 40 CFR 122.41(m)(4)(i) (Federal Standard Provisions, Attachment D) are (A) bypass was unavoidable to prevent loss of life, personal injury, or severe property damage; (B) there were no feasible alternatives to the bypass, such as the use of auxiliary treatment facilities, retention of untreated wastes, or maintenance during normal periods of equipment downtime; and (C) the Discharger submitted notice to the Regional Water Board as required under Federal Standard Provision – Permit Compliance I.G.5.

On February 14, 2007, the Discharger submitted a No Feasible Alternatives Analysis that addresses measures it has taken and plans to take to reduce and eliminate bypasses during peak wet weather events so that such bypasses could be approved pursuant to 40 CFR 122.41(m)(4). During the past several years, the Discharger has undertaken sewer system improvements that have reduced the volume of storm flows to the treatment plant. The Discharger has also installed a Supervisory Control And Data Acquisition (SCADA) system to allow better control and management of storm flows in the collection system. While limited space is available to expand treatment capacity at the plant location, the Discharger is planning to construct a 660,000 gallon retention basin to further reduce the need for blending. The Discharger has also proposed the following actions, which are required by Provision VI.C.7:

- Use an empty aeration basin as-needed during wet weather events
- Acquire second combination sewer cleaning truck
- Acquire new sewer TV system vehicle
- Rehabilitate or replace sewers in poor condition and sewers that require frequent maintenance
- Implement identified controls to reduce return of water back to facility headworks

The Discharger has satisfied the criteria of 40 CFR 122.41(m)(4)(i)(A-C). Bypasses are necessary to prevent severe property damage when flows exceed the capacity of the secondary treatment. The Discharger has analyzed alternatives to bypassing and has determined that no feasible alternative exists at this time. The Discharger

has submitted notice to the Regional Water Board as required under Federal Standard Provision – Permit Compliance I.G.5.

5. **Discharge Prohibition III. E (No sanitary sewer overflows to waters of the United States).** The Discharge Prohibition No. 15 from Table 4-1 of the Basin Plan, and the CWA prohibit the discharge of wastewater to surface waters except as authorized under an NPDES permit. POTWs must achieve secondary treatment, at a minimum, and any more stringent limitations that are necessary to achieve water quality standards. [33 U.S.C. § 1311 (b)(1)(B and C)] Therefore, a sanitary sewer overflow that results in the discharge of raw sewage, or sewage not meeting secondary treatment requirements, to surface waters is prohibited under the CWA and the Basin Plan.

B. Technology-based Effluent Limitations

1. Scope and Authority

The Code of Federal Regulations (CFR) at 40 CFR §122.44(a) requires that permits include applicable technology-based limitations and standards. This Order includes technology-based effluent limitations based on Secondary Treatment Standards at 40 CFR §133. Permit effluent limitations for conventional pollutants are technology-based. Technology-based effluent limitations are put in place to ensure that full secondary treatment is achieved by the wastewater treatment facility, as required under 40 CFR §133.102. Effluent limitations for these conventional pollutants are defined by the Basin Plan, Table 4-2. Further, these conventional effluent limits are the same as those from the previous permit for the following constituents, except settleable solids, which is no longer required.

- Biochemical Oxygen Demand (BOD),
- BOD percent removal,
- Total suspended solids (TSS),
- TSS percent removal,
- pH,
- Oil and grease, and
- Total chlorine residual.

2. Applicable Technology-Based Effluent Limitations

The Order retains the following technology based effluent limitations, applicable to Monitoring Location E-001, from Order No. R2-2002-0027. The effluent limitation for chlorine residual applies to Discharge Point E-002.

Table F-8. Summary of Technology-based Effluent Limitations

Parameter[a]	Units	Effluent Limitations				
		Average Monthly	Average Weekly	Maximum Daily	Instantaneous Minimum	Instantaneous Maximum
Monitoring Location E-001						
$BOD_{5\text{-}day}$[b]	mg/L	30	45	--	--	--
TSS[b]	mg/L	30	45	--	--	--
Oil and Grease[c]	mg/L	10	--	20	--	--
pH[d]	standard units	--	--	--	6.0	9.0
Discharge Point E-002						
Total Chlorine Residual[e]	mg/L	--	--	--	--	0.0

a) The technology based effluent limitations for settleable matter are not retained from Order No. R2-2002-0027, as the Regional Water Board has determined that compliance with the Secondary Treatment Regulation at 40 CFR 133 and with the Basin Plan (Table 4-2) requirements for all discharges to inland surface waters and enclosed bays and estuaries of the Region will ensure removal of settleable solids to acceptably low levels – below 0.1 ml/L/hr (30 day average) and 0.2 ml/L/hr (daily maximum).

b) The maximum daily limitations (MDELs) for BOD and TSS are retained from the previous Order. 40 CFR 122.45(d)(2) specifies that discharge limitations for POTWs shall be stated as average weekly limitations and average monthly limitations, unless impracticable.

c) The limitations established for oil and grease are levels attainable by secondary treatment and are required by the Basin Plan (Table 4-2) for all discharges to inland surface waters and enclosed bays and estuaries of the Region.

d) The pH limitation is retained from the previous Order and is required by USEPA's Secondary Treatment Regulation at 40 CFR 133 and by the Basin Plan (Table 4-2) for deep water discharges.

e) The effluent limitation for total residual chlorine is unchanged from the previous permit and is based on the Basin Plan (Chapter 4, Table 4-2).

3. Bacteria

The Basin Plan, Table 4.2, establishes effluent limitations for total coliform bacteria for all discharges from sewage treatment facilities to inland surface waters and enclosed bays and estuaries of the Region. Fecal coliform limitations may be substituted for the limitations of the Basin Plan "provided it can be conclusively demonstrated through a program approved by the Regional Water Board that such substitution will not result in unacceptable adverse impacts on the beneficial uses of the receiving water." Following receiving water impact monitoring studies conducted since 1992, the Regional Water Board amended the Discharger's NPDES permit with Order No. 98-117.

Order No. 98-117 amended Waste Discharge Requirements for permittees discharging treated effluent through the NBSU, to allow fecal coliform limitations to be substituted for total coliform limitations. The finding relied on previous studies, including the City of San Mateo and SBSA's 1997 fecal coliform studies that showed no relationship between dischargers' effluent fecal coliform concentrations and the shoreline concentrations. No impact from these two outfalls on the south Foster City shellfish harvesting beds was found. The San Mateo outfall is ¾ mile from the shellfish harvesting beds and the SBSA outfall is approximately two miles away.

Since the NBSU outfall is 6.5 miles from the shellfish harvesting beds, it is even less likely to impact those shellfish beds. Order No. 98-117 identified that there is, however, water contact recreation (board surfing) in the vicinity of the NBSU outfall. Thus effluent limits are set to meet water contact recreation objectives, which will also be protective of shellfish harvesting. These are a geometric mean fecal coliform density based on 5 consecutive samples within a 30-day period effluent limitation of 200 MPN/100ml and a 90th percentile fecal coliform effluent limitation of 400 MPN/100ml.

Additionally, enterococci bacteria are more closely associated with gastrointestinal disease than fecal coliform bacteria for water contact. Pursuant to the BEACH Act of 2000, USEPA has promulgated enterococci bacteria criteria for water contact recreation in coastal waters that apply to this discharge. The limit for enterococci bacteria established by this Order (geometric mean not to exceed 35 colonies per 100 milliliters) is based on water quality criteria established by the USEPA at 40 CFR131.41 for coastal recreation waters, including coastal estuaries, in California. These water quality criteria became effective on December 16, 2004. [69 Fed Reg. 67218 (November 16, 2004)].

Although USEPA also established single sample maximum criteria for enterococci bacteria, this Order implements only the geometric mean criterion of 35 colonies per 100 milliliters as an effluent limitation. When these water quality criteria were promulgated, USEPA expected that the single sample maximum values would be used for making beach notification and beach closure decisions. “Other than in the beach notification and closure decision context, the geometric mean is the more relevant value for assuring that appropriate actions are taken to protect and improve water quality because it is a more reliable measure, being less subject to random variation ….” [69 Fed Reg. 67224 (November 16, 2004)]

C. Water Quality-Based Effluent Limitations (WQBELs)

1. Scope and Authority

a. NPDES regulations at 40 CFR 122.44(d)(1)(i) require permits to include WQBELs for pollutants (including toxicity) that are or may be discharged at levels that cause, have reasonable potential to cause, or contribute to an excursion above any state water quality standard (reasonable potential). The process for determining reasonable potential and calculating WQBELs, when necessary, is intended to protect the designated uses of the receiving water as specified in the Basin Plan, and achieve applicable water quality objectives and criteria that are contained in the CTR, NTR, Basin Plan, other State plans and policies.

b. NPDES regulations and the SIP provide the basis to establish Maximum Daily Effluent Limitations (MDELs).

1) NPDES Regulations. NPDES regulations at 40 CFR Part 122.45(d) state: “For continuous discharges all permit effluent limitations, standards, and prohibitions, including those necessary to achieve water quality standards,

shall *unless impracticable* be stated as maximum daily and average monthly discharge limitations for all discharges other than publicly owned treatment works."

2) **SIP.** The SIP (page 8, Section 1.4) requires WQBELs be expressed as MDELs and average monthly effluent limitations (AMELs).

c. MDELs are used in this Order to protect against acute water quality effects. The MDELs are necessary for preventing fish kills or mortality to aquatic organisms.

2. Applicable Beneficial Uses and Water Quality Criteria and Objectives

The WQC and WQOs applicable to the receiving waters for this discharge are from the Basin Plan; the CTR, established by USEPA at 40 CFR 131.38; and the NTR, established by USEPA at 40 CFR 131.36. Some pollutants have WQC/WQOs established by more than one of these three sources.

a. **Basin Plan.** The Basin Plan specifies numeric WQOs for 10 priority toxic pollutants, as well as narrative WQOs for toxicity and bioaccumulation in order to protect beneficial uses. The pollutants for which the Basin Plan specifies numeric objectives are arsenic, cadmium, chromium (VI), copper in freshwater, lead, mercury, nickel, silver, zinc, and cyanide. The narrative toxicity objective states, in part, "[a]ll waters shall be maintained free of toxic substances in concentrations that are lethal to or that produce other detrimental responses in aquatic organisms." The bioaccumulation objective states in part, "[c]ontrollable water quality factors shall not cause a detrimental increase in concentrations of toxic substances found in bottom sediments or aquatic life. Effects on aquatic organisms, wildlife, and human health will be considered." Effluent limitations and provisions contained in this Order are designed, based on available information, to implement these objectives.

b. **CTR.** The CTR specifies numeric aquatic life criteria for 23 priority toxic pollutants and numeric human health criteria for 57 priority toxic pollutants. These criteria apply to all inland surface waters and enclosed bays and estuaries of the San Francisco Bay Region, although Tables 3-3 and 3-4 of the Basin Plan include numeric objectives for certain of these priority toxic pollutants, which supersede criteria of the CTR (except in the South Bay south of the Dumbarton Bridge).

c. **NTR.** The NTR establishes numeric aquatic life criteria for selenium, numeric aquatic life and human health criteria for cyanide, and numeric human health criteria for 34 toxic organic pollutants for waters of San Francisco Bay upstream to, and including Suisun Bay and the Delta. These criteria of the NTR are applicable to the Lower San Francisco Bay, the receiving water for this Discharger.

d. **Technical Support Document for Water Quality-Based Toxics Controls.** Where numeric objectives have not been established or updated in the Basin Plan, NPDES regulations at 40 CFR Part 122.44(d) require that WQBELs be

established based on USEPA criteria, supplemented where necessary by other relevant information, to attain and maintain narrative WQOs to fully protect designated beneficial uses.

To determine the need for and establish WQBELs, when necessary, the Regional Water Board staff has followed the requirements of applicable NPDES regulations, including 40 CFR Parts 122 and 131, as well as guidance and requirements established by the Basin Plan; USEPA's *Technical Support Document for Water Quality-Based Toxics Control* (TSD, EPA/505/2-90-001, 1991); and the State Water Board's *Policy for Implementation of Toxics Standards for Inland Surface Waters, Enclosed Bays, and Estuaries of California* (SIP, 2005).

e. **Basin Plan Receiving Water Salinity Policy.** The Basin Plan (like the CTR and the NTR) states that the salinity characteristics (i.e., freshwater vs. saltwater) of the receiving water shall be considered in determining the applicable WQC. Freshwater criteria shall apply to discharges to waters with salinities equal to or less than one ppt at least 95 percent of the time. Saltwater criteria shall apply to discharges to waters with salinities equal to or greater than 10 ppt at least 95 percent of the time in a normal water year. For discharges to water with salinities in between these two categories, or tidally influenced freshwaters that support estuarine beneficial uses, the criteria shall be the lower of the salt or freshwater criteria (the latter calculated based on ambient hardness) for each substance.

The receiving water for this discharger, Lower San Francisco Bay is within the South Bay Basin Watershed of the Region, which is a saltwater environment based on salinity data generated through the Regional Monitoring Program (RMP) at the San Bruno Shoal (BB15), Alameda (BB70), and Oyster Point (BB30) sampling stations between 1993 and 2001. In that period, the average salinity at the three sampling stations was 23 - 24 ppt; and the minimum observed salinity levels at the San Bruno Shoal, Alameda, and Oyster Point sampling stations were 12, 11, and 0.5 ppt, respectively. As salinity was greater than 10 ppt in at least 95 percent of receiving water samples, the saltwater criteria from the Basin Plan, NTR, and CTR are applicable to this discharge.

f. **Site-Specific Metals Translators.** Because NPDES regulations at 40 CFR 122.45(c) require effluent limitations for metals to be expressed as total recoverable metal, and applicable water quality criteria for the metals are typically expressed as dissolved metal, factors or translators must be used to convert metals concentrations from dissolved to total recoverable and vice versa. In the CTR, USEPA establishes default translators to be used in NPDES permitting activities; however, site-specific conditions such as water temperature, pH, suspended solids, and organic carbon, greatly impact the form of metal (dissolved, filterable, or otherwise) present and therefore available in the water to cause toxicity. In general, the dissolved form of the metals is more available and more toxic to aquatic life than filterable forms. Site-specific translators can be developed to account for site-specific conditions, thereby preventing exceedingly stringent or under-protective WQOs.

For deep water discharges to Lower San Francisco Bay, the following translators are used for copper and nickel, based on recommendations of the Clean Estuary Partnership's *North of Dumbarton Bridge Copper and Nickel Development and Selection of Final Translators* (2005). In determining the need for WQBELs and calculating WQBELs for all other metals, default translators established by the USEPA in the CTR at 40 CFR 131.38(b)(2), Table 2, are used.

CU and Ni Translators for Deepwater Discharges to Lower San Francisco Bay	Copper		Nickel	
	AMEL Translator	MDEL Translator	AMEL Translator	MDEL Translator
	0.74	0.88	0.65	0.85

3. Determining the Need for WQBELs

NPDES regulations at 40 CFR 122.44(d)(1)(i) require permits to include WQBELs for all pollutants (non-priority or priority) "which the Director determines are or may be discharged at a level which will cause, have the reasonable potential to cause, or contribute to an excursion above any narrative or numeric criteria within a State water quality standard" (have reasonable potential). Thus, assessing whether a pollutant has reasonable potential is the fundamental step in determining whether or not a WQBEL is required. For non-priority pollutants, Regional Water Board staff used available monitoring data, the receiving water's designated uses, and/or previous permit pollutant limitations to determine reasonable potential. For priority pollutants, Regional Water Board staff used the methods prescribed in Section 1.3 of the SIP to determine if the discharge from the Facility demonstrates reasonable potential.

a. Reasonable Potential Analysis

Using the methods prescribed in Section 1.3 of the SIP, Regional Water Board staff analyzed the effluent data to determine if the discharge from the Facility demonstrates reasonable potential. The Reasonable Potential Analysis (RPA) compares the effluent data with numeric and narrative WQOs in the Basin Plan and numeric WQC from the USEPA, the NTR, and the CTR. The Basin Plan objectives and CTR criteria are shown in Appendix A of this Fact Sheet.

b. Reasonable Potential Methodology

Using the methods and procedures prescribed in Section 1.3 of the SIP, Regional Water Board staff analyzed the effluent and background data and the nature of facility operations to determine if the discharge has reasonable potential to cause or contribute to exceedances of applicable water quality objectives (WQOs) or water quality criteria (WQC). Appendix A of this Fact Sheet shows the stepwise process described in Section 1.3 of the SIP.

The RPA projects a maximum effluent concentration (MEC) for each pollutant based on existing data, while accounting for a limited data set and effluent variability. There are three triggers in determining reasonable potential.

(1) The first WQC trigger is activated if the MEC is greater than the lowest applicable WQO (MEC $\geq$ WQO/WQC), which has been adjusted, if appropriate, for pH, hardness, and translator data. If the MEC is greater than the adjusted WQO, then that pollutant has reasonable potential, and a WQBEL is required.

(2) The second trigger is activated if the observed maximum ambient background concentration (B) is greater than the adjusted WQO/WQC (B > WQO/WQC), and the pollutant is detected in any of the effluent samples (MEC > ND).

(3) The third trigger is activated if a review of other information determines that a WQBEL is required to protect beneficial uses, even though both MEC and B are less than the WQO/WQC. A limitation may be required under certain circumstances to protect beneficial uses.

c. Effluent Data

The Regional Water Board's August 6, 2001 letter titled *Requirement for Monitoring of Pollutants in Effluent and Receiving Water to Implement New Statewide Regulations and Policy* (hereinafter referred to as the August 6, 2001 Letter—available online; see Standard Language and Other References Available Online, below) to all permittees, formally required the Discharger (pursuant to Section 13267 of the CWC) to initiate or continue effluent monitoring for the priority pollutants using analytical methods that provide the best detection limits reasonably feasible. Regional Water Board staff analyzed these effluent data and the nature of the Facility to determine if the discharge has reasonable potential. The RPA was based on the effluent monitoring data collected by the Discharger from October 2003 through September 2006 for most inorganic pollutants, and from January 2002 through February 2006 for most organic pollutants.

d. Ambient Background Data

Ambient background values are used in the RPA and in the calculation of effluent limitations. For the RPA, ambient background concentrations are the observed maximum detected water column concentrations. The SIP states that for calculating WQBELs ambient background concentrations are either the observed maximum ambient water column concentrations or, for WQO/WQC intended to protect human health from carcinogenic effects, the arithmetic mean of observed ambient water concentrations. The RMP station at Yerba Buena Island, located in the Central Bay, has been monitored for most of the inorganic toxic pollutants (CTR constituent numbers 1–15) and some of the organic toxic pollutants (CTR constituent numbers 16–126), and these data from the RMP were used as background data in performing the RPA.

Not all the constituents listed in the CTR have been analyzed by the RMP. These data gaps are addressed by the August 6, 2001 Letter, which formally required Dischargers (pursuant to Section 13267 of the CWC) to conduct

ambient background monitoring for those constituents not currently monitored by the RMP and to provide this technical information to the Regional Water Board.

On May 15, 2003, a group of several San Francisco Bay Region Dischargers (known as the Bay Area Clean Water Agencies, or BACWA) submitted a collaborative receiving water study, entitled the *San Francisco Bay Ambient Water Monitoring Interim Report*. This study includes monitoring results from sampling events in 2002 and 2003 for the remaining priority pollutants not monitored by the RMP. The RPA was conducted and the WQBELs were calculated using RMP data from 1993 through 2003 for inorganics and organics at the Yerba Buena Island RMP station, and additional data from the BACWA *Ambient Water Monitoring: Final CTR Sampling Update Report* for the Yerba Buena Island RMP station.

e. RPA Determination

The MECs, most stringent applicable WQOs/WQC, and background concentrations used in the RPA are presented in the following table, along with the RPA results (yes or no) for each pollutant analyzed. Reasonable potential was not determined for all pollutants, as there are not applicable WQOs/WQC for all pollutants, and monitoring data were not available for others. More details regarding the RPA are included in Appendix A of this Fact Sheet. The pollutants that exhibit reasonable potential are copper, cyanide, and dioxin-TEQ.

Table F-9. Reasonable Potential Analysis Summary

CTR #	Priority Pollutants	MEC or Minimum DL [a][b] (µg/L)	Governing WQO/WQC (µg/L)	Maximum Background or Minimum DL [a][b] (µg/L)	RPA Results[c]
1	Antimony	**1.5**	4300	1.8	No
2	Arsenic	**2.1**	36	2.46	No
3	Beryllium	< 0.06	No Criteria	0.215	Ud
4	Cadmium	**0.06**	9.4	0.13	No
5a	Chromium (III)	Not Available	No Criteria	Not Available	Ud
5b	Chromium (VI)	**1.3**	50	4.4	No
6	Copper	**12**	4.2	2.55	**Yes**
7	Lead	**0.73**	8.5	0.80	No
8	Mercury (303d listed)	**0.015**	0.025	0.0086	No
9	Nickel	**6.1**	12.6	3.7	No
10	Selenium	**2.0**	5	0.39	No
11	Silver	**2.1**	2.2	0.052	No
12	Thallium	Not Available	6.3	0.21	Ud
13	Zinc	**45**	86	5.1	No
14	Cyanide	**26**	1.0	< 0.4	**Yes**
15	Asbestos	Not Available	No Criteria	Not Available	Ud
16	2,3,7,8-TCDD (303d listed)	< 6.37E-07	1.4E-08	Not Available	No
16-TEQ	Dioxin TEQ (303d listed)	**1.44E-09 (estimated DNQ)**	1.4E-08	7.10E-08	**Yes**
17	Acrolein	< 0.56	780	< 0.5	No
18	Acrylonitrile	< 0.33	0.66	0.03	No
19	Benzene	**1.0**	71	< 0.05	No

CTR #	Priority Pollutants	MEC or Minimum DL [a][b] (µg/L)	Governing WQO/WQC (µg/L)	Maximum Background or Minimum DL [a][b] (µg/L)	RPA Results[c]
20	Bromoform	**0.09**	360	< 0.5	No
21	Carbon Tetrachloride	< 0.06	4.4	0.06	No
22	Chlorobenzene	< 0.06	21000	< 0.5	No
23	Chlorodibromomethane	**0.3**	34	< 0.05	No
24	Chloroethane	< 0.07	No Criteria	< 0.5	Ud
25	2-Chloroethylvinyl ether	< 0.1	No Criteria	< 0.5	Ud
26	Chloroform	**5.6**	No Criteria	< 0.5	Ud
27	Dichlorobromomethane	**0.8**	46	< 0.05	No
28	1,1-Dichloroethane	**3.7**	No Criteria	< 0.05	Ud
29	1,2-Dichloroethane	**1.3**	99	0.04	No
30	1,1-Dichloroethylene	< 0.06	3.2	< 0.5	No
31	1,2-Dichloropropane	**0.5**	39	< 0.05	No
32	1,3-Dichloropropylene	< 0.05	1700	Not Available	No
33	Ethylbenzene	**1.3**	29000	< 0.5	No
34	Methyl Bromide	< 0.05	4000	< 0.5	No
35	Methyl Chloride	<0.04	No Criteria	< 0.5	Ud
36	Methylene Chloride	**8.7**	1600	0.5	No
37	1,1,2,2-Tetrachloroethane	< 0.06	11	< 0.05	No
38	Tetrachloroethylene	**1.7**	8.9	< 0.5	No
39	Toluene	**28**	200000	< 0.3	No
40	1,2-Trans-Dichloroethylene	< 0.05	140000	< 0.5	No
41	1,1,1-Trichloroethane	< 0.06	No Criteria	< 0.5	Ud
42	1,1,2-Trichloroethane	< 0.07	42	< 0.05	No
43	Trichloroethylene	**0.8**	81	< 0.5	No
44	Vinyl Chloride	< 0.05	525	< 0.5	No
45	2-Chlorophenol	< 0.4	400	< 1.2	No
46	2,4-Dichlorophenol	< 0.3	790	< 1.3	No
47	2,4-Dimethylphenol	< 0.9	2300	< 1.3	No
48	2-Methyl- 4,6-Dinitrophenol	< 0.4	765	< 1.2	No
49	2,4-Dinitrophenol	< 0.3	14000	< 0.7	No
50	2-Nitrophenol	< 0.3	No Criteria	< 1.3	Ud
51	4-Nitrophenol	< 0.2	No Criteria	< 1.6	Ud
52	3-Methyl 4-Chlorophenol	< 0.5	No Criteria	< 1.1	Ud
53	Pentachlorophenol	< 0.4	7.9	< 1.0	No
54	Phenol	<0.005	4600000	< 1.3	No
55	2,4,6-Trichlorophenol	< 0.2	6.5	< 1.3	No
56	Acenaphthene	< 0.17	2700	0.0015	No
57	Acenaphthylene	< 0.03	No Criteria	0.00053	Ud
58	Anthracene	< 0.16	110000	0.0005	No
59	Benzidine	< 0.6	0.00054	< 0.0015	No
60	Benzo(a)Anthracene	Not Available	0.049	0.0053	Ud
61	Benzo(a)Pyrene	< 0.09	0.049	0.00029	No
62	Benzo(b)Fluoranthene	< 0.11	0.049	0.0046	No
63	Benzo(ghi)Perylene	Not Available	No Criteria	0.0027	Ud
64	Benzo(k)Fluoranthene	< 0.16	0.049	0.0015	No
65	Bis(2-Chloroethoxy)Methane	< 0.5	No Criteria	< 0.3	Ud
66	Bis(2-Chloroethyl)Ether	< 0.6	1.4	< 0.3	No
67	Bis(2-Chloroisopropyl)Ether	< 0.3	170000	Not Available	No

CTR #	Priority Pollutants	MEC or Minimum DL [a][b] (µg/L)	Governing WQO/WQC (µg/L)	Maximum Background or Minimum DL [a][b] (µg/L)	RPA Results[c]
68	Bis(2-Ethylhexyl)Phthalate	**1.8**	5.9	< 0.5	No
69	4-Bromophenyl Phenyl Ether	< 0.4	No Criteria	< 0.23	Ud
70	Butylbenzyl Phthalate	< 0.4	5200	< 0.52	No
71	2-Chloronaphthalene	< 0.3	4300	< 0.3	No
72	4-Chlorophenyl Phenyl Ether	< 0.4	No Criteria	< 0.3	Ud
73	Chrysene	< 0.14	0.049	0.0024	No
74	Dibenzo(a,h)Anthracene	< 0.04	0.049	0.00064	No
75	1,2-Dichlorobenzene	**0.07**	17000	< 0.8	No
76	1,3-Dichlorobenzene	< 0.07	2600	< 0.8	No
77	1,4-Dichlorobenzene	**0.4**	2600	< 0.8	No
78	3,3 Dichlorobenzidine	< 0.2	0.077	< 0.001	No
79	Diethyl Phthalate	< 0.5	120000	< 0.24	No
80	Dimethyl Phthalate	< 0.5	2900000	< 0.24	No
81	Di-n-Butyl Phthalate	< 0.4	12000	< 0.5	No
82	2,4-Dinitrotoluene	< 0.3	9.1	< 0.27	No
83	2,6-Dinitrotoluene	< 0.3	No Criteria	< 0.29	Ud
84	Di-n-Octyl Phthalate	< 0.4	No Criteria	< 0.38	Ud
85	1,2-Diphenylhydrazine	< 0.6	0.54	0.0037	No
86	Fluoranthene	< 0.03	370	0.011	No
87	Fluorene	< 0.02	14000	0.00208	No
88	Hexachlorobenzene	< 0.4	0.00077	0.0000202	No
89	Hexachlorobutadiene	< 0.3	50	< 0.3	No
90	Hexachlorocyclopentadiene	< 0.1	17000	< 0.31	No
91	Hexachloroethane	< 0.6	8.9	< 0.2	No
92	Indeno(1,2,3-cd)Pyrene	< 0.04	0.049	0.004	No
93	Isophorone	< 0.5	600	< 0.3	No
94	Naphthalene	< 0.05	No Criteria	0.0023	Ud
95	Nitrobenzene	< 0.7	1900	< 0.25	No
96	N-Nitrosodimethylamine	< 0.6	8.1	< 0.3	No
97	N-Nitrosodi-n-Propylamine	< 0.3	1.4	< 0.001	No
98	N-Nitrosodiphenylamine	< 0.5	16	< 0.001	No
99	Phenanthrene	< 0.03	No Criteria	0.0061	Ud
100	Pyrene	< 0.03	11000	0.0051	No
101	1,2,4-Trichlorobenzene	< 0.6	No Criteria	< 0.3	Ud
102	Aldrin	< 0.002	0.00014	Not Available	No
103	alpha-BHC	**0.004**	0.013	0.000496	No
104	beta-BHC	< 0.001	0.046	0.000413	No
105	gamma-BHC	< 0.001	0.063	0.0007034	No
106	delta-BHC	< 0.001	No Criteria	0.000042	Ud
107	Chlordane (303d listed)	< 0.005	0.00059	0.00018	No
108	4,4'-DDT (303d listed)	< 0.001	0.00059	0.000066	No
109	4,4'-DDE (linked to DDT)	<0.001	0.00059	0.000693	No
110	4,4'-DDD	< 0.001	0.00084	0.000313	No
111	Dieldrin (303d listed)	< 0.002	0.00014	0.000264	No
112	alpha-Endosulfan	< 0.002	0.0087	0.000031	No
113	beta-Endolsulfan	< 0.001	0.0087	0.000069	No
114	Endosulfan Sulfate	< 0.001	240	0.0000819	No
115	Endrin	< 0.002	0.0023	0.000036	No

CTR #	Priority Pollutants	MEC or Minimum DL [a][b] (µg/L)	Governing WQO/WQC (µg/L)	Maximum Background or Minimum DL [a][b] (µg/L)	RPA Results[c]
116	Endrin Aldehyde	< 0.002	0.81	Not Available	No
117	Heptachlor	< 0.003	0.00021	0.000019	No
118	Heptachlor Epoxide	< 0.002	0.00011	0.00002458	No
119-125	PCBs sum (303d listed)	< 0.3	0.00017	Not Available	No
126	Toxaphene	< 0.15	0.00020	Not Available	No
	Tributylin	Not Available	0.01	< 0.001	Ud
	Total PAHs	Not Available	15	0.26	Ud

[a] The Maximum Effluent Concentration (MEC) or maximum background concentration is the actual detected concentration unless there is a "<" sign before it, in which case the value shown is the minimum detection level.
[b] The MEC or maximum background concentration is "Not Available" when there are no monitoring data for the constituent.
[c] RPA Results = Yes, if MEC > WQO/WQC, or B > WQO/WQC and MEC is detected;
= No, if MEC and B are < WQO/WQC or all effluent data are undetected;
= Undetermined (Ud), if no criteria have been promulgated or no effluent data are available.

(1) Constituents with limited data. The Discharger has performed sampling and analysis for the constituents listed in the CTR. This data set was used to perform the RPA. In some cases, reasonable potential cannot be determined because effluent data are limited, or ambient background concentrations are not available. The Discharger will continue to monitor for these constituents in the effluent using analytical methods that provide the best feasible detection limits. When additional data become available, further analysis will be conducted to determine whether to add numeric effluent limitations or to continue monitoring.

(2) Pollutants with no Reasonable Potential. WQBELs are not included in this Order for constituents that do not demonstrate reasonable potential; however, monitoring for those pollutants is still required. As required by Provision VI.C.2.a, if concentrations of these constituents are found to have increased significantly, the Discharger will be required to investigate the source(s) of the increase(s). Remedial measures are required if the increases pose a threat to water quality in the receiving water.

4. WQBEL Calculations

a. Pollutants with Reasonable Potential

WQBELs were developed for the toxic and priority pollutants that were determined to have reasonable potential to cause or contribute to exceedances of the WQOs or WQC. The WQBELs were calculated based on appropriate WQOs/WQC and the appropriate procedures specified in Section 1.4 of the SIP. The WQOs or WQC used for each pollutant with reasonable potential and the basis for the WQOs/WQC is indicated in the following table.

Table F-10. Water Quality Criteria/Objectives for Toxics

Pollutant	Water Quality Criterion or Objective (µg/L)			Basis
	Aquatic Life Chronic	Aquatic Life Acute	Human Health	
Copper	4.2	5.5	---	Basin Plan (salt water aquatic life)
Cyanide	1.0	1.0	---	NTR criteria for the Bay
Dioxin-TEQ	---	---	1.4×10^{-8}	Basin Plan narrative for human health
Total Ammonia as N[1]	0.94	10.79	---	Basin Plan (salt water aquatic life)

[1] The Basin Plan un-ionized WQOs were translated to total ammonia WQOs as described in Section 4.d.4 of this Fact Sheet.

b. Dilution Credit

The SIP provides the basis for dilution credits. The NBSU outfall is designed to achieve a minimum initial dilution of 10:1. Based on review of RMP monitoring data for the Bay, there is variability in the receiving water, and the hydrology of the receiving water is, itself, very complex. Therefore, there is uncertainty regarding the representative nature of ambient background data, which is used for determination of effluent limitations. Pursuant to section 1.4.2.1 of the SIP, "dilution credit may be limited or denied on a pollutant-by-pollutant basis…." The Regional Water Board has determined that a conservative 10:1 dilution credit for non-bioaccumulative priority pollutants (except for ammonia and cyanide) and a zero dilution credit for bioaccumulative pollutants are necessary for protection of beneficial uses. The detailed basis for each are explained below.

(1) For certain bioaccumulative pollutants, based on BPJ, dilution credit is not included in calculating the final WQBELs. This determination is based on available data on concentrations of these pollutants in aquatic organisms, sediment, and the water column. The Clean Water Act 303(d) list was updated and approved by the Regional Water Board on October 25, 2006. The USEPA added dioxin and furan compounds for Lower San Francisco Bay. The reason for this decision is based on the following factors that suggest there is no more assimilative capacity in the Bay for dioxins and furans.

Samples of tissue taken from fish in the San Francisco Bay show the presence of these pollutants at concentrations greater than screening levels. (*Contaminant Concentrations in Fish from San Francisco Bay*, May 1997). The Office of Environmental Health and Hazard Assessment (OEHHA) also

completed a preliminary review of data in the 1994 San Francisco Bay pilot study, *Contaminated Levels in Fish Tissue from San Francisco Bay*. The results of the study also showed elevated levels of chemical contaminants in fish tissues. In December 1994, OEHHA subsequently issued an interim consumption advisory covering certain fish species in the Bay. This advisory is still in effect for exposure to sport fish that are found to be contaminated with dioxins and furans, and other pollutants.

(2) Section 2.1.1 of the SIP states that for bioaccumulative compounds on the 303(d) list, the Regional Water Board should consider whether mass-loading limits should be limited to current levels. The Regional Water Board finds that mass-loading limits are warranted for mercury for the receiving waters of this Discharger. This is to ensure that this Discharger does not contribute further to impairment of the narrative objective for bioaccumulation.

(3) For non-bioaccumulative constituents, except ammonia and cyanide, a conservative allowance of 10:1 dilution for discharges to San Francisco Bay has been assigned for protection of beneficial uses. The 10:1 dilution allowance was granted in the previous Order and is also based on the Basin Plan's Prohibition Number 1 from Table 4-1, which prohibits discharges with less than 10:1 dilution. Limiting the dilution credit is allowed based on SIP provisions in Section 1.4.2. The dilution credit is also based on SIP section 1.4.2, which considers the following:

(a) A far-field background station is appropriate because the receiving water body (the Bay) is a very complex estuarine system with highly variable and seasonal upstream freshwater inflows and diurnal tidal saltwater inputs. The SIP allows background conditions to be determined on a discharge-by-discharge or water body-by-water body basis (SIP section 1.4.3). Consistent with the SIP, Regional Water Board staff has chosen to use a water body-by-water body basis due to inherent uncertainties in characterizing ambient background conditions in a complex estuarine system on a discharge-by-discharge basis.

The Yerba Buena Island RMP monitoring station, relative to other RMP stations, fits the guidance criteria of the SIP for establishing background conditions. The SIP requires that background water quality data be representative of the ambient receiving water that will mix with the discharge. Regional Water Board staff believes that water quality data from the Yerba Buena Island monitoring station is representative of the water that will mix with discharges from the Facility/NBSU Outfall.

(b) Because of the complex hydrology of the San Francisco Bay, a mixing zone has not been established. There are uncertainties in accurately determining the mixing zones for each discharge. The models that have been used to predict dilution have not considered the three dimensional nature of the currents in the Estuary resulting from the interaction of tidal flushes and seasonal fresh water outflows. Being heavier and colder than fresh water, ocean salt water enters San Francisco Bay on a twice per day

tidal cycle, generally beneath the warmer fresh water that flows seaward during wet seasons. When these waters mix and interact, complex circulation patterns occur due to varying densities of fresh and ocean waters. The locations of this mixing and interaction change, depending on the strength of each tide and rate of delta outflow. Additionally, sediment loads to the Bay from the Central Valley change on a longer term basis, affecting the depth of different parts of the Bay and resulting in alteration of flow patterns and mixing and dilution that is achieved at an outfall.

(c) The SIP allows limiting a mixing zone and dilution credit for persistent pollutants. Discharges to the Bay are defined by the SIP as incompletely mixed discharges; therefore, dilution credit should be determined using site specific information. Section 1.4.2.2 of the SIP specifies that the Regional Water Board shall "significantly limit a mixing zone and dilution credit as necessary to protect beneficial uses …. For example, in determining the extent of a mixing zone or dilution credit, the Regional Water Board shall consider the presence of pollutants in the discharge that are … persistent." The SIP defines persistent pollutants as "substances for which degradation or decomposition in the environment is nonexistent or very slow." The pollutants at issue here are persistent pollutants (e.g., copper). Dilution studies that estimate actual dilution do not address the effects of these persistent pollutants in the Bay environment, including long term effects on sediment concentrations.

(4) For ammonia, a non-persistent pollutant, estimated actual initial dilution levels have been used to calculate the effluent limit. This is justified because ammonia is quickly dispersed and degraded to a non-toxic state very rapidly. An engineering study on the actual dilution was performed by the Airfield Development Engineering Consultant on behalf of the NBSU and submitted on December 12, 2000. This was part of a larger study to estimate hydrodynamic impacts on the Bay by the proposed runway extension.

The discharge is pumped through a 60" pipe to a 654-ft diffuser section located approximately 5,200 ft offshore, at a depth 20 feet below mean lower low water, from Pt. San Bruno. The diffuser consists of 66 three-inch openings spaced 7-ft apart. At a point in the immediate vicinity of the diffuser, a 74:1 instant dilution was calculated using the CORMIX model to estimate mixing of the effluent under tidal conditions. Dilution rates at other points were estimated. At a point approximately 1.5 km from the diffuser into the Bay (to the east), a dilution of 270:1 was estimated. In calculating the water quality based effluent limits (maximum daily and average monthly) the lowest dilution rate, i.e. 74:1 (or D = 73), was used.

(5) For cyanide, another non-persistent pollutant that quickly disperses and degrades like ammonia, the lowest actual dilution rate of 74:1 (or D = 73) was used to calculate the water quality based effluent limits. The background documentation for the proposed cyanide site-specific objectives included an antidegradation analysis that concluded that

cyanide effluent limitations (17 µg/L as an AMEL and 47 µg/L as an MDEL) resulting from implementation of the site-specific objectives (assuming 10:1 dilution) would not degrade water quality. The cyanide limits in this Order (17 µg/L as an AMEL and 45 µg/L as an MDEL) are not greater than those anticipated with the revised site-specific objectives and deemed consistent with antidegradation policies. Therefore, the limits in this Order are consistent with antidegradation policies. Additionally, consistent with the site-specific objective conclusion on antidegradation, to further ensure that water quality is not degraded, this Order requires a cyanide action plan similar to that proposed with the site-specific objective.

c. Summary of Water Quality Based Effluent Limitations

The following table summarizes the WQBELs calculated for each toxic and priority pollutant that was determined to have reasonable potential to cause or contribute to exceedances of the WQOs or WQC. The WQBELs were calculated based on appropriate WQOs/WQC and the procedures specified in Section 1.4 of the SIP, as shown in **Appendix F-3** of this Fact Sheet.

Table F-11. Summary of Water Quality Based Effluent Limitations for Toxic Pollutants

Pollutants	Units	AMEL	MDEL
Copper	µg/L	69	110
Cyanide	µg/L	17	45
Dioxin-TEQ	µg/L	1.4×10^{-8}	2.8×10^{-8}
Total Ammonia as N	mg/L	67	130

d. Development of Effluent Limitations for Specific Pollutants

(1) Copper

i. *Copper WQC*. The saltwater chronic and acute criteria from the Basin Plan and the CTR for dissolved copper for protection of aquatic life are 4.8 and 3.1 µg/L, respectively. Site-specific translators of 0.74 (chronic) and 0.88 (acute), as recommended by the Clean Estuary Partnership's *North of Dumbarton Bridge Copper and Nickel Development and Selection of Final Translators* (2005), were applied to these criteria to convert from dissolved WQC to total WQC. In addition, a water effects ratio (WER) of 2.4, as recommended by the Clean Estuary Partnership's *North of Dumbarton Bridge Copper and Nickel Site-Specific Objective (SSO) Derivation (December 2004)*, was applied, in accordance wit hUSEPA guidance ─ Interim Guidance on Determination and Use of Water Effect Ratios for Metals (EPA-823-B-94-001). The resulting WQC of 4.2 µg/L for chronic protection and 5.5 µg/L for acute protection were used to perform the RPA.

ii. *RPA Results*. This Order establishes effluent limitations for copper, as the MEC of 12 µg/L exceeds the applicable water quality criteria for this

pollutant, demonstrating reasonable potential by Trigger 1, as defined previously.

iii. *Copper WQBELs*. Copper WQBELs calculated according to SIP procedures and based on a coefficient of variation of 0.33, are 69 µg/L and 110 µg/L for the AMEL and MDEL, respectively. These limitations are based on a minimum initial dilution of 10 to 1 as discussed previously.

iv. *Plant Performance and Attainability*. Statistical analysis of effluent data for copper, collected over the period of October 2003 through September 2006, shows that the 95th percentile (10 µg/L) is less than the AMEL (69 µg/L); the 99th percentile (13 µg/L) is less than the MDEL (108 µg/L); and the mean (6.5 µg/L) is less than the long term average of the projected lognormal distribution of the effluent data set after accounting for effluent variability (53 µg/L). The Regional Water Board concludes, therefore, that immediate compliance with these effluent limitations for copper is feasible.

v. *Alternate Limitations for Copper*. As described in the Clean Estuary Partnership's *North of Dumbarton Bridge Copper and Nickel Site-Specific Objective (SSO) Derivation* (December 2004), the Regional Water Board is proposing to develop site-specific criteria for copper in non-ocean, marine waters of the Region. Proposed site-specific objectives (SSOs) for copper are 2.5 and 3.9 µg/L as four-day and one-hour average criteria, respectively. If these SSOs for copper are adopted, final effluent limitations, calculated according to Section 1.4 of the SIP and continuing to use the WER of 2.4, would be 52 µg/L (AMEL) and 81 µg/L (MDEL). If these SSOs for copper are adopted, the alternate effluent limits will become effective upon the adoption date, so long as the SSOs and their current justification remain unchanged.

vi. *Antibacksliding*. The previous permit included an interim effluent limit of 27µg/L as a monthly average. Since there were no final WQBELs in the previous permit to which to compare the new final WQBELs, there is no backsliding.

(2) Cyanide

i. *Cyanide WQC*. The most stringent applicable water quality criteria for cyanide are established by the NTR for protection of aquatic life in San Francisco Bay. The NTR establishes both the saltwater Criterion Maximum Concentration (acute criterion) and the Criterion Chronic Concentration (chronic criterion) at 1.0 µg/L.

ii. *RPA Results*. This Order establishes effluent limitations for cyanide because the MEC of 26 µg/L exceeds the governing WQC of 1 µg/L, demonstrating reasonable potential by Trigger 1, as defined previously.

iii. *Cyanide WQBELs*. WQBELs for cyanide, calculated according to SIP procedures and based on a coefficient of variation of 1.2, are 17 µg/L and

45 µg/L for the AMEL and MDEL, respectively. These limits are based on a dilution of 74:1 and the non-persistent nature of cyanide.

iv. *Plant Performance and Attainability.* The Discharger's Feasibility Study asserts that it cannot immediately comply with final WQBELs for cyanide. Regional Water Board staff disagrees with the Discharger's assertions for cyanide because the currently proposed limits are higher than those anticipated by the Discharger based on its review of previously drafted limits. The revised limits now reflect a dilution ratio of 74:1, and compliance is feasible.

v. *Alternative Limits for Cyanide.* As described in *Draft Staff Report on Proposed Site-Specific Water Quality Objectives and Effluent Limit Policy for Cyanide for San Francisco Bay*, dated November 10, 2005, the Regional Water Board is proposing to develop site-specific criteria for cyanide. In this report, the proposed site-specific criteria for marine waters are 2.9 µg/L as a four-day average, and 9.4 µg/L as a one-hour average. Based on these assumptions, and the Discharger's current cyanide data (coefficient of variation of 1.2), the AMEL for cyanide will remain the same (17 µg/L) and the MDEL will be 47 µg/L. These alternative limits will become effective only if the SSOs adopted for cyanide are based on the same assumptions as stated in the draft Staff Report of November 10, 2005.

vi. *Antibacksliding*. The previous permit did not specify final WQBELs for cyanide and only contained an interim effluent limitation of 10 µg/L as a daily maximum. Since there were no final WQBELs in the previous permit to which to compare the new final WQBELs, there is no backsliding.

(3) Dioxin - TEQ

i. *Dioxin-TEQ WQC*. Regional Water Board staff derived WQBELs for dioxin-TEQ using the CTR objective for 2,3,7,8-TCDD. This approach is in accordance with 40 CFR 122.44(d)(1)(vi) which allows use of a calculated numeric water quality criterion, such as a proposed stated criterion or policy interpreting the state's narrative criterion, supplemented with other relevant information.

Toxic Equivalency Factors (TEFs) were used to translate the narrative Basin Plan WQO to a numeric WQC for 16 dioxin congeners. The Basin Plan narrative WQO for bioaccumulative substances states:

> "Many pollutants can accumulate on particulates, in sediments, or bioaccumulate in fish and other aquatic organisms. Controllable water quality factors shall not cause a detrimental increase in concentrations of toxic substances found in bottom sediments or aquatic life. Effects on aquatic organisms, wildlife, and human health will be considered."

This narrative WQO applies to dioxin and furan compounds, based in part on the consensus of the scientific community that these compounds associate with particulates, accumulate in sediments, and bioaccumulate in the fatty tissue of fish and other organisms. USEPA's 303(d) listing determined that the narrative objective for bioaccumulative pollutants was not met in San Francisco Bay because of the levels of dioxins and furans in fish tissue.

The CTR establishes a numeric human health WQO of 0.014 picogram per liter (pg/L) for 2,3,7,8-tetrachlorinated dibenzo-p-dioxin (2,3,7,8-TCDD) based on consumption of aquatic organisms. The preamble of the CTR states that California NPDES permits should use toxicity equivalents (TEQs) where dioxin-like compounds have a reasonable potential with respect to narrative criteria. In USEPA's National Recommended WQOs, December 2002, USEPA published the 1998 World Health Organization Toxicity Equivalence Factor (TEF)[1] scheme. In addition, the CTR preamble states USEPA's intent to adopt revised WQC guidance subsequent to their health reassessment for dioxin-like compounds. The SIP applies to all toxic pollutants, including dioxins and furans.

ii. *RPA Results*. Because the Lower San Francisco Bay is currently listed on the CWA 303(d) list as impaired by dioxins and furans, and dioxins were detected in the effluent (MEC estimated to be 1.44×10^{-9} µg/L) and the background dioxin-TEQ concentration (7.1×10^{-8} µg/L) exceeds the translated WQO (1.4×10^{-8} µg/L), dioxin-TEQ in the discharge has reasonable potential by Trigger 2 to contribute to exceedances of the Basin Plan's narrative bioaccumulation objective.

iii. *WQBELs*. WQBELs for dioxin-TEQ, calculated using SIP procedures as guidance, are 1.4×10^{-8} µg/L and 2.8×10^{-8} µg/L, the AMEL and MDEL, respectively. These limitations are calculated without credit for dilution as discussed previously.

iv. *Plant Performance and Attainability*. The Discharger's Feasibility Study asserts that the facility cannot immediately comply with the WQBELs for dioxin-TEQ. The effluent data are insufficient to determine the distribution of the effluent data set or to calculate a mean and standard deviation, therefore, the feasibility to comply with final effluent limitations is uncertain. The Discharger may be capable of complying with the WQBELs; however, the Discharger has only detected one congener (OCDD) in two out of six samples and both detected values were estimated. Based on the limited available data, the Regional Water Board concurs with the Discharger's assertion of infeasibility to comply.

[1] The 1998 WHO scheme includes TEFs for dioxin-like PCBs. Since dioxin-like PCBs are already included within "Total PCBs," for which the CTR has established a specific standard, dioxin-like PCBs are not included in this Order's version of the TEF scheme.

v. *Antibacksliding*. The previous permit did not include effluent limitations for dioxin-TEQ; therefore, antibacksliding requirements are satisfied.

(4) Ammonia

i. *Ammonia WQC.* The Basin Plan contains WQOs for un-ionized ammonia of 0.025 milligrams per liter (mg/L) as an annual median, 0.16 mg/L as a maximum north of the Golden Gate Channel, and 0.4 mg/L as a maximum south of the Golden Gate Channel. The WQOs are translated from un-ionized ammonia objectives to equivalent total ammonia concentrations (as nitrogen), since sampling and lab methods are not available to analyze for un-ionized ammonia and because the fraction of total ammonia that is converted to the toxic un-ionized form is dependent on pH, salinity and temperature of the receiving water.

To translate the Basin Plan unionized ammonia objective, Regional Water Board staff used pH, salinity and temperature from March 1993 to August 2003 from the San Bruno Shoal station, the closest Regional Monitoring Program (RMP) station to the outfall. The following equations for estuarine and marine waters are used to determine the percentage of total ammonia in a discharge that will be converted to the toxic un-ionized phase in receiving waters (U.S. EPA. 1989. *Ambient Water Quality Criteria for Ammonia (Saltwater)–1989*. EPA Publication No. 440/5-88-004).

For salinity > 10 ppt: fraction of $NH_3 = 1/1+10^{(pk-pH)}$

Where:

pK = 9.245 + 0.116*(I) + 0.0324*(298-T) + 0.0415*(P)/(T+273)
I = the molal ionic strength of saltwater = 19.9273*(S)/(1000-1.005109*S)
S = Salinity (parts per thousand)
T = temperature in °C
P = Pressure (one atmosphere)

To convert the chronic un-ionized ammonia WQO to an equivalent total ammonia concentration, the median un-ionized ammonia fraction at the Richardson Bay station was used. To convert the acute un-ionized ammonia WQO to an equivalent total ammonia concentration, the 90th percentile un-ionized ammonia fraction at Richardson Bay station was used. Using the median and 90th percentile to translate the chronic and acute un-ionized ammonia WQOs for un-ionized ammonia to equivalent total ammonia concentrations is consistent with US Environmental Protection Agency (U.S. EPA) Guidance on translating dissolved metal WQOs to total recoverable metal WQOs (U.S. EPA. 1996. *The Metals Translator: Guidance for Calculating a Total Recoverable Limit from a Dissolved Criterion*, EPA Publication Number 823-B-96-007). The

equivalent total ammonia acute and chronic criteria are 0.94 mg/L and 10.79 mg/L, respectively.

ii. *RPA Results.* The SIP methodology was used to perform the RPA and to calculate effluent limitations, which is consistent with the methodology to calculate WQBELs for other toxic pollutants in this Order. To set limits for toxic pollutants (section 4.5.5.2), the Basin Plan indicates that water quality-based effluent limits shall be calculated according to this SIP. As Section 3.3.20 of the Basin Plan refers to ammonia as a toxic pollutant, the use of the SIP to determine and establish limits for ammonia is consistent with the Basin Plan. This Order establishes effluent limitations for total ammonia, because the MEC of 36 mg/L exceeds the applicable water quality criteria for this pollutant, demonstrating reasonable potential by Trigger 1, as defined previously.

iii. *WQBELs.* The total ammonia WQBELs calculated according to SIP procedures are 134 mg/L as MDEL and 67 mg/L as AMEL. To calculate limits based on the chronic aquatic life criterion, statistical adjustments were conducted because the Basin Plan's value is based on an annual median instead of a 4-day average. For limits based on the chronic criterion, the SIP assumes a monthly sampling frequency of 4 days per month to calculate effluent limits. To use the SIP methodology to calculate effluent limits for a Basin Plan objective that is based on an annual median, an averaging period of 365 days and a monitoring frequency of 30 days per month are used. These statistical adjustments are supported by U.S. EPA's *Water Quality Criteria; Notice of Availability; 1999 Update of Ambient Water Quality Criteria for Ammonia;* published in the Federal Register on December 22, 1999.

Following SIP methodology as guidance, the maximum ambient background total ammonia concentration was used to calculate effluent limits based on the acute criterion. For the chronic criterion calculation, the median background total ammonia concentration was used because the Basin Plan's chronic un-ionized ammonia objective is an annual median. It is more representative to use the central tendency of ambient conditions than a daily maximum since the time-scale of this objective is over such a long period. The newly calculated limitations take into account the deep water nature of the discharge and the non-persistent nature of ammonia, and therefore, are based on an initial dilution of 74:1 as discussed previously.

iv. *Plant Performance and Attainability.* Statistical analysis of effluent data for total ammonia, collected over the period of January 2002 through April 2007, shows that immediate compliance with these final effluent limitations for total ammonia is feasible, and these final effluent limitations will become effective upon adoption of this Order.

5. Whole Effluent Acute Toxicity

a. **Permit Requirements.** The Basin Plan requires dischargers to either conduct flow-through effluent toxicity tests or perform static renewal bioassays (Chapter 4, Acute Toxicity) to measure the toxicity of wastewaters and to assess negative impacts upon water quality and beneficial uses caused by the aggregate toxic effect of the discharge of pollutants. This Order includes effluent limitations for whole effluent acute toxicity. Compliance evaluation is based on 96-hour flow-through bioassays. All bioassays shall be performed according to the USEPA-approved method in 40 CFR Part 136, currently "Methods for Measuring the Acute Toxicity of Effluents and Receiving Water, 5th Edition."

b. **Compliance History.** The Discharger's acute toxicity monitoring data show that there was no exceedance of the effluent limitations during 2002-2006, with fathead minnow survival rates ranging from 80-100%.

c. **Ammonia Toxicity.** If acute toxicity is observed in the future and the Discharger believes that it is due to ammonia toxicity, this has to be shown through a Toxicity Identification Evaluation (TIE) acceptable to the Executive Officer. If the Discharger demonstrates to the satisfaction of the Executive Officer that exceedance of the acute toxicity limits is caused by ammonia and the Discharger has not violated the permit limits for ammonia, then such toxicity does not constitute a violation of this effluent limit. If ammonia toxicity is verified in the TIE, the Discharger may utilize a pH adjustment protocol approved by the Executive Officer for the routine bioassay testing.

5. Whole Effluent Chronic Toxicity

a. **Permit Requirements.** This Order includes requirements for chronic toxicity monitoring based on the Basin Plan at Chapter 4 and in accordance with USEPA and State Water Board Task Force guidance. This Order includes the Basin Plan narrative toxicity objective as the applicable effluent limit, implemented via monitoring with numeric values as "triggers" to initiate accelerated monitoring and to initiate a chronic toxicity reduction evaluation (TRE) as necessary. The permit requirements for chronic toxicity are also consistent with the CTR and SIP requirements.

b. **Chronic Toxicity Triggers.** This Order includes chronic toxicity triggers of 10 chronic toxicity units (TUc) for a three-sample median and 20 TUc for single sample maximum, consistent with Table 4-6 of the Basin Plan for dischargers monitoring chronic toxicity quarterly.

c. **Monitoring History.** The Discharger's chronic toxicity monitoring data show that there were no exceedances of the trigger between 2002 and 2006.

d. **Screening Phase Study.** The Discharger completed a screening phase study in April 2003 and the results of this study have been incorporated herein.

e. **Permit Reopener.** The Regional Water Board will consider amending this Order to include numeric toxicity limits if the Discharger fails to aggressively implement all reasonable control measures included in any approved TRE workplan, following detection of consistent significant non-artifactual toxicity.

D. Compliance Schedule

The Discharger has shown the infeasibility of complying with final limitations for dioxin-TEQ and has demonstrated that a compliance schedule for dioxin-TEQ is justified based on the Discharger's source control and pollution minimization efforts in the past and continued efforts in the present and future.

1. The Discharger submitted a Feasibility Study for Monitoring Location E-001, dated March 19, 2007. The Feasibility Study asserts that the Discharger cannot immediately comply with final WQBELs for dioxin-TEQ. Regional Water Board staff used the Discharger's self-monitoring data from January 2002 through February 2006 to confirm the Discharger's assertion of infeasibility.

2. The Basin Plan authorizes compliance schedules in a permit if an existing Discharger cannot immediately comply with a new and more stringent effluent limitation. The Basin Plan requires the Discharger to demonstrate the infeasibility of achieving immediate compliance with the new limitation to qualify for a compliance schedule.

   The following documentation must be submitted to the Regional Water Board to support a finding of infeasibility:

   – Descriptions of diligent efforts the Discharger have made to quantify pollutant levels in the discharge, sources of the pollutant in the waste stream, and the results of those efforts.

   – Descriptions of source control and/or pollutant minimization efforts currently under way or completed.

   – A proposed schedule for additional or future source control measures, pollutant minimization, or waste treatment.

   – A demonstration that the proposed schedule is as short as practicable.

   The Basin Plan provides for up to a 10-year compliance schedule to implement measures to comply with new standards as of the effective date of those standards. A compliance schedule for dioxin-TEQ until 10 years after the effective date of this Order is based on this Order putting into effect the current new interpretation of the narrative bioaccumulative WQO in the Basin Plan.

   A maximum compliance schedule is reasonable for dioxin-TEQ because of the considerable uncertainty in determining an effective measure (e.g., pollution prevention, treatment upgrades) that should be implemented to ensure compliance with final limits. In the Regional Water Board's view, it is appropriate to allow the Discharger sufficient time to first explore source control measures before requiring it

to propose further actions, such as treatment plant upgrades, that are likely to be much more costly. This approach is supported by the Basin Plan (Section 4.13), which states, "In general, it is often more economical to reduce overall pollutant loading into treatment systems than to install complex and expensive technology at the plant."

During the compliance schedule period, the Regional Water Board may take appropriate enforcement actions if requirements are not met.

E. Land Discharge Specifications

Not Applicable.

F. Reclamation Specifications

Not applicable.

V. RATIONALE FOR RECEIVING WATER LIMITATIONS

Receiving water limitations are retained from the previous Order and reflect applicable water quality standards from the Basin Plan.

VI. RATIONALE FOR MONITORING AND REPORTING REQUIREMENTS

The principal purposes of a monitoring program by a Discharger are to:

- Document compliance with waste discharge requirements and prohibitions established by the Regional Water Board,
- Facilitate self-policing by the Discharger in the prevention and abatement of pollution arising from waste discharge,
- Develop or assist in the development of limitations, discharge prohibitions, national standards of performance, pretreatment and toxicity standards, and other standards, and
- Prepare water and wastewater quality inventories.

The MRP is a standard requirement in almost all NPDES permits issued by the Regional Water Board, including this Order. It contains definitions of terms, specifies general sampling and analytical protocols, and sets out requirements for reporting of spills, violations, and routine monitoring data in accordance with NPDES regulations, the CWC, and Regional Water Board's policies. The MRP also defines the sampling stations and frequency, the pollutants to be monitored, and additional reporting requirements. Pollutants to be monitored include all parameters for which effluent limitations are specified. Monitoring for additional constituents, for which no effluent limitations are established, is also required to provide data for future completion of RPAs for them.

A. Influent Monitoring

Influent monitoring requirements for BOD_5 and TSS allows determination of compliance with this Order's 85 percent removal requirement.

B. Effluent Monitoring

The MRP retains most effluent monitoring requirements from the previous permit. Changes in effluent monitoring are summarized as follows:

- Monitoring for settleable solids is no longer required, as the effluent limitation for this parameter has not been retained by the Order.
- Routine monitoring in effluent is required for ammonia, copper, cyanide, and dioxin-TEQ – those priority toxic pollutants with effluent limitations established by the Order. Monitoring for all other priority toxic pollutants must be conducted in accordance with frequency and methods described in the Regional Water Board's letter of August 6, 2001 – Requirements for Monitoring of Pollutants in Effluent and Receiving Water to Implement New Statewide Regulations and Policy.

C. Bypasses or Sewer Overflow Monitoring

The MRP retains monitoring requirements to record observations related to bypasses or sewer overflows.

D. Whole Effluent Toxicity Testing Requirements

1. **Acute Toxicity.** Monthly 96-hour bioassay testing is required to demonstrate compliance with the effluent limitation for acute toxicity.
2. **Chronic Toxicity.** Chronic whole effluent toxicity testing is required annually in order to demonstrate compliance with the Basin Plan's narrative toxicity objective.

E. Receiving Water Monitoring

1. Regional Monitoring Program

On April 15, 1992, the Regional Water Board adopted Resolution No. 92-043 directing the Executive Officer to implement the San Francisco Bay Regional Monitoring Program (RMP) for the San Francisco Bay. Subsequent to a public hearing and various meetings, Regional Water Board staff requested major permit holders in this region, under authority of section 13267 of CWC, to report on the water quality of the estuary. These permit holders responded to this request by participating in a collaborative effort, through the San Francisco Estuary Institute. This effort has come to be known as the RMP for Trace Substances. This Order specifies that the Discharger shall continue to participate in the RMP, which involves collection of data on pollutants and toxicity in water, sediment and biota of the estuary.

2. Monitoring Location – Receiving Waters RSW-001

The Discharger shall monitor the receiving waters (Lower San Francisco Bay) as required by Section VIII. B of the MRP in order to determine compliance with receiving water limitations of this Order.

F. Other Monitoring Requirements

Not applicable.

VII. RATIONALE FOR PROVISIONS

A. Standard Provisions (Provision VI.A)

Standard Provisions, which in accordance with 40 CFR §§122.41 and 122.42, apply to all NPDES discharges and must be included in every NPDES permit, are provided in **Attachments D and H** of this Order.

B. Monitoring and Reporting Requirements (Provision VI.B)

The Discharger is required to conduct monitoring of the permitted discharges in order to evaluate compliance with permit conditions. Monitoring requirements are contained in the MRP (Attachment E), Standard Provisions and SMP, Part A (Attachment G) of the Permit. This provision requires compliance with these documents, and is based on 40 CFR 122.63. The Standard Provisions and SMP, Part A are standard requirements in almost all NPDES permits issued by the Regional Water Board, including this Order. They contain definitions of terms, specify general sampling and analytical protocols, and set out requirements for reporting of spills, violations, and routine monitoring data in accordance with NPDES regulations, the CWC, and Regional Water Board's policies. The MRP contains a sampling program specific for the facility. It defines the sampling stations and frequency, the pollutants to be monitored, and additional reporting requirements. Pollutants to be monitored include all parameters for which effluent limitations are specified. Monitoring for additional constituents, for which no effluent limitations are established, is also required to provide data for future completion of RPAs.

C. Special Provisions (Provision VI.C)

1. Reopener Provisions

These provisions are based on 40 CFR 123 and allow future modification of this Order and its effluent limitations as necessary in response to updated WQOs that may be established in the future.

2. Special Studies, Technical Reports and Additional Reporting Requirements

a. Effluent Characterization Study. This Order does not include effluent limitations for the selected constituents addressed in the August 6, 2001 Letter that do not demonstrate reasonable potential, but this provision requires the Discharger to continue monitoring for these pollutants as described in the August 6, 2001 Letter and as specified in the MRP of this Order. If concentrations of these constituents

increase significantly, the Discharger will be required to investigate the source of the increases and establish remedial measures, if the increases result in reasonable potential to cause or contribute to an excursion above the applicable WQO/WQC. This provision is based on the Basin Plan and the SIP.

b. Ambient Background Receiving Water Study. This provision is based on the Basin Plan, the SIP, and the August 6, 2001 Letter for priority pollutant monitoring. As indicated in the Order, this requirement may be met by participating in the collaborative BACWA study.

c. Optional Mass Offset Plan: This option is provided to encourage the Discharger to further implement aggressive reduction of mass loads to the Lower San Francisco Bay. If the Discharger wishes to pursue a mass offset program, a mass offset plan for reducing 303(d)-listed pollutants to the same receiving water body needs to be submitted for Regional Water Board approval. The Regional Water Board will consider any proposed mass offset plan and amend this Order accordingly.

3. Best Management Practices and Pollutant Minimization Program

This provision is based on Chapter 4 of the Basin Plan and Chapter 2 of the SIP.

Additionally, on October 15, 2003, the Regional Water Board adopted Resolution R2-2003-0096 in support of a collaborative working approach between the Regional Water Board and BACWA to promote Pollution Minimization Program development and excellence. Specifically, the Resolution embodies a set of eleven guiding principles that will be used to develop tools such as “P2 menus” for specific pollutants, as well as provide guidance in improving P2 program efficiency and accountability. Key principles in the Resolution include promoting watershed, cross-program and cross-media approaches to pollution prevention, and jointly developing tools to assess program performance that may include peer reviews, self-audits or other formats.

4. Construction, Operation, and Maintenance Specifications

a. Wastewater Facilities, Review and Evaluation, Status Reports: This provision is based on the previous Order and the Basin Plan. See Section VI.4.a of this Order for specific requirements.

b. Operations and Maintenance Manual, Review and Status Reports: This provision is based on the Basin Plan, the requirements of 40 CFR §122, and the previous Order. See Section VI.4.b of this Order for specific requirements.

c. Contingency Plan, Review and Status Reports: This provision is based on the Basin Plan, the requirements of 40 CFR §122, and the previous Order. See Section VI.4.c of this Order for specific requirements.

5. Special Provisions for POTWs

a. Pretreatment Program. This provision is based on 40 CFR Part 403 (General Pretreatment Regulations for Existing and New Sources of Pollution). In 2005, the City of Burlingame declassified all of its Significant Industrial Users (SIUs) to Moderate Commercial Users. The users and the Regional Water Board were notified on this declassification in letters sent by the City in January and February 2005.

b. Sludge Management Practices Requirements: This provision is based on the Basin Plan (Chapter IV) and 40 CFR §§257 and 503 and the previous permit.

c. Sanitary Sewer Overflows and Sewer System Management Plan: This provision is to explain this Order's requirements as they relate to the Discharger's conveyance system, and to promote consistency with the State Water Board adopted Statewide General Waste Discharge Requirements for Sanitary Sewer Overflow (SSO WDRs) and a related Monitoring and Reporting Program (Order No. 2006-0003-DWQ). The bases for these requirements are described elsewhere in this Fact Sheet. See Section VI.C.5.c of this Order for specific requirements.

6. Nearshore Outfall

This provision is based on Discharge Prohibition III.A and Chapter 4 of the Basin Plan, which prohibits discharges that do not receive an initial 10:1 dilution. During very high wet weather flows, secondary-treated wastewater is sometimes discharged from the nearshore outfall. The Discharger reported using the outfall four times between December 2002 and December 2005, with the duration of discharge ranging from 6 hours to approximately 12 hours. The Discharger's No Feasible Alternatives Analysis submitted on February 14, 2007, primarily addresses blending during wet weather conditions, but also identifies options for eliminating the need for the shallow water discharge. These options include use of an out-of- service and empty aeration basin during wet weather events and construction of a 660,000 gallon retention basin. A preliminary design has been developed for the retention basin and construction will be financed through a State Revolving Fund loan. This provision requires completion of the basin by September 1, 2011. The schedule to implement these alternatives has been established to ensure future discharges to the nearshore outfall do not occur; it does not allow discharges to the nearshore outfall at any time. Any discharge of wastewater from the nearshore outfall is a violation of Discharge Prohibitions III.A and C.

7. Wet Weather Blending

This provision is based on 40 CFR 122.41(m)(4) as detailed in section IV.A.4 of this Fact Sheet. According to the Discharger's No Feasible Alternatives Analysis submitted on February 14, 2007, 22 blending events occurred between January 2002 and March 2006. The duration of these events ranged from 3.5 hours up to 54 hours. The Discharger's infeasibility analysis also indicates that elimination or

reduction of blending is currently infeasible in the short-term. This provision is necessary to ensure the Discharger implements corrective measures to minimize or eliminate blending consistent with 40 CFR 122.41(m). This provision also requires the Discharger to submit a No Feasible Alternatives Analysis 180 days prior to the Order expiration date to provide a current assessment for the need to blend.

8. Compliance Schedule for Dioxin-TEQ

The compliance schedule and the requirement to submit reports on further measures to reduce concentrations of dioxin-TEQ to ensure compliance with final limits are based on the Basin Plan and 40 CFR 122.47(a)(3). As previously described, the Discharger submitted a Feasibility Study, and the Regional Water Board confirmed the Discharger's assertion of infeasibility to comply with final WQBELS for dioxin-TEQ. Based on this, a compliance schedule is appropriate for dioxin-TEQ because the Discharger has made good faith and reasonable efforts towards characterizing the sources. However, time to allow additional efforts is necessary to achieve compliance. The maximum allowable compliance schedule is granted to the Discharger for dioxin-TEQ because of the considerable uncertainty in determining an effective measure (e.g., pollution prevention, treatment upgrades) that should be implemented to ensure compliance with final limits. It is appropriate to allow the Discharger sufficient time to first explore source control measures before requiring it to propose further actions, such as treatment plant upgrades, that are likely to be much more costly.

This approach is supported by the Basin Plan section 4.13 which states: "In general, it is often more economical to reduce overall pollutant loadings into the treatment systems than to install complex and expensive technology at the plant."

Because of the ubiquitous nature of the sources of dioxin-TEQ, this provision allows the Discharger to address compliance with calculated WQBELs through other strategies such as mass offsets. The previous permit did not include an effluent limit for dioxin-TEQ. Therefore, this Order grants the Discharger 10 years from the effective date of this Order to comply with final limits.

9. Action Plan for Cyanide

The proposed cyanide site-specific objectives, if approved, will require action plans for source control. Implementation of a similar action plan for cyanide at this time would ensure that any increase in cyanide limits would be consistent limits expected with the site-specific objectives. Therefore, the antidegradation analysis prepared for the site-specific objectives could also apply to these limits, which would therefore comply with antidegradation policies (i.e., increasing the limits would not degrade the quality of the receiving water).

10. Action Plan for Copper

Since the proposed SSO for copper has associated action plans for source control, this provision requires an action plan to implement source control requirements once the alternate limits become effective.

VIII. PUBLIC PARTICIPATION

The California Regional Water Quality Control Board, the San Francisco Bay Regional Water Board, is considering the issuance of waste discharge requirements (WDRs) that will serve as a National Pollutant Discharge Elimination System (NPDES) permit for City of Burlingame Wastewater Treatment Facility. As a step in the WDR adoption process, the Regional Water Board staff has developed tentative WDRs. The Regional Water Board encourages public participation in the WDR adoption process.

A. Notification of Interested Parties

The Regional Water Board has notified the Discharger and interested agencies and persons of its intent to prescribe waste discharge requirements for the discharge and has provided them with an opportunity to submit their written comments and recommendations. Notification was provided through the following: San Mateo Times.

B. Written Comments

The staff determinations are tentative. Interested persons are invited to submit written comments concerning these tentative WDRs. Comments must be submitted either in person or by mail to the Executive Officer at the Regional Water Board at the address above on the cover page of this Order.

To be fully responded to by staff and considered by the Regional Water Board, written comments should be received at the Regional Water Board offices by 5:00 p.m. on **November 14, 2007.**

C. Public Hearing

The Regional Water Board will hold a public hearing on the tentative WDRs during its Board meeting on the following date and time and at the following location:

Date: January 30, 2008
Time: 9:00am
Location: Elihu Harris State Office Building
1515 Clay Street, 1st Floor Auditorium
Oakland, CA 94612

Contact: Heather Ottaway, (510) 622-2116, email Hottaway@waterboards.ca.gov

Interested persons will be invited to attend. At the public hearing, the Regional Water Board will hear testimony, if any, pertinent to the discharge, WDRs, and permit. Oral testimony will be heard; however, for accuracy of the record, important testimony should be in writing.

Please be aware that dates and venues may change. Our Web address is http://www.waterboards.ca.gov/sanfranciscobay where you can access the current agenda for changes in dates and locations.

D. Waste Discharge Requirements Petitions

Any aggrieved person may petition the State Water Resources Control Board to review the decision of the Regional Water Board regarding the final WDRs. The petition must be submitted within 30 days of the Regional Water Board's action to the following address:

State Water Resources Control Board
Office of Chief Counsel
P.O. Box 100, 1001 I Street
Sacramento, CA 95812-0100

E. Information and Copying

The Report of Waste Discharge (RWD), related documents, tentative effluent limitations and special provisions, comments received, and other information are on file and may be inspected at the address above at any time between 8:30 a.m. and 4:45 p.m., Monday through Friday. Copying of documents may be arranged through the Regional Water Board by calling 510-622-2300.

F. Register of Interested Persons

Any person interested in being placed on the mailing list for information regarding the WDRs and NPDES permit should contact the Regional Water Board, reference this facility, and provide a name, address, and phone number.

G. Additional Information

Requests for additional information or questions regarding this order should be directed to Heather Ottaway at 510-622-2116 (e-mail at Hottaway@waterboards.ca.gov).

IX. APPENDICES

Appendix F-1: Effluent Data for Priority Pollutants (not attached due to large size)
Appendix F-2: RPA Results for Priority Pollutants (not attached due to large size)
Appendix F-3: Calculation of Final WQBELs
Appendix F-4: Discharger's Feasibility Analysis

Appendix F-3: Calculation of Final WQBELs

PRIORITY POLLUTANTS	**Copper**		**Cyanide**		**Dioxin TEQ**
Units	**ug/L**		**ug/L**		**ug/L**
Basis and Criteria type	BP & CTR SW Aquatic Life	Alternate limits using SSOs (December 2004)	NTR Criterion for the Bay	Alternate Limits Using Proposed SSOs	Basin Plan HH
CTR Criteria -Acute	5.5	-----	1.0	9.4	-----
CTR Criteria -Chronic	4.2	-----	1.0	2.9	-----
SSO Criteria -Acute (December 2004) (Diss.)	-----	3.9			
SSO Criteria -Chronic (December 2004) (Diss.)	-----	2.5			
Water Effects ratio (WER)	2.4	2.4			
Lowest WQO	4.2		1.0	1.0	1.4E-08
Site Specific Translator - MDEL	0.88	0.88			
Site Specific Translator - AMEL	0.74	0.74			
Dilution Factor (D) (if applicable)	9	9	73	9	0
No. of samples per month	4	4	4	4	4
Aquatic life criteria analysis required? (Y/N)	Y	Y	Y	Y	N
HH criteria analysis required? (Y/N)	N	N	Y	Y	Y
Applicable Acute WQO	13.1	11	1	9.4	
Applicable Chronic WQO	10.1	8.1	1	2.9	
HH criteria			220,000	220,000	1.4E-08
Background (Maximum Conc for Aquatic Life calc)	2.55	2.55	0.4	0.4	7.1E-08
Background (Average Conc for Human Health calc)			0.4	0.4	5.0E-08
Is the pollutant Bioaccumulative(Y/N)? (e.g., Hg)	N	N	N	N	Y
ECA acute	108	83.4	44.8	90.4	
ECA chronic	77.6	58.1	44.8	25.4	
ECA HH			16279971	2199996	1.40E-08
No. of data points <10 or at least 80% of data reported non detect? (Y/N)	N	N	N	N	Y
Avg of effluent data points	6.5	6.5	4.0	4.0	
Std Dev of effluent data points	2.2	2.2	4.8	4.8	
CV calculated	0.33	0.33	1.20	1.20	N/A
CV (Selected) - Final	0.33	0.33	1.20	1.20	0.60
ECA acute mult99	0.49	0.49	0.17	0.17	
ECA chronic mult99	0.69	0.69	0.32	0.32	
LTA acute	53.39	41.25	7.77	15.68	
LTA chronic	53.47	40.06	14.37	8.15	
minimum of LTAs	53.39	40.06	7.77	8.15	
AMEL mult95	1.30	1.30	2.14	2.14	1.55

MDEL mult99	2.02	2.02	5.76	5.76	3.11
AMEL (aq life)	69.20	51.92	16.60	17.41	
MDEL(aq life)	107.96	81.00	44.80	46.97	
MDEL/AMEL Multiplier	1.56	1.56	2.70	2.70	2.01
AMEL (human hlth)			16279971	2199996	1.4E-08
MDEL (human hlth)			43932691	5936851	2.8E-08
minimum of AMEL for Aq. life vs HH	69	52	16.6	17	1.4E-08
minimum of MDEL for Aq. Life vs HH	108	81	44.8	47	2.8E-08
Current limit in permit (30-day average)	27 (interim)	27 (interim)	-----	-----	-----
Current limit in permit (daily maximum)	-----	-----	10 (interim)	10 (interim)	-----
Final limit - AMEL	69	52	16.6	17	1.4E-08
Final limit - MDEL	108	81	44.8	47	2.8E-08
Max Effl Conc (MEC)	12	12	26	26	1.4E-09

AMMONIA (mg/L)	**Acute**	**Chronic**
Basis and Criteria type	BP & CTR SW Aquatic Life	BP & CTR SW Aquatic Life
CTR Criteria -Acute	10.79	
CTR Criteria -Chronic		0.94000
Water Effects ratio (WER)	1	1
Lowest WQO	10.79	0.94000
Site Specific Translator - MDEL		
Site Specific Translator - AMEL		
Dilution Factor (D) (if applicable)	73	73
No. of samples per month	4	30
Aquatic life criteria analysis required? (Y/N)	Y	Y
HH criteria analysis required? (Y/N)	N	N
Applicable Acute WQO	10.79	
Applicable Chronic WQO		0.94
HH criteria		
Background (Maximum Conc for Aquatic Life calc)	0.19	0.1
Background (Average Conc for Human Health calc)		
Is the pollutant Bioaccumulative(Y/N)? (e.g., Hg)	N	N
ECA acute	784.59	
ECA chronic		62.2600
ECA HH		
No. of data points <10 or at least 80% of data reported non detect? (Y/N)	N	N
Avg of effluent data points	20.33	20.33

Std Dev of effluent data points	8.06	8.06
CV calculated	0.40	0.40
CV (Selected) - Final	0.40	0.40
ECA acute mult99	0.44	
ECA chronic mult99		0.95
LTA acute	346.99	
LTA chronic		59.34
minimum of LTAs	346.99	59.34
AMEL mult95	1.35	1.12
MDEL mult99	2.26	2.26
AMEL (aq life)	470.14	66.66
MDEL(aq life)	784.59	134.17
MDEL/AMEL Multiplier	1.67	2.01
AMEL (human hlth)		
MDEL (human hlth)		
minimum of AMEL for Aq. life vs HH	470.1431	66.6587
minimum of MDEL for Aq. Life vs HH	784.5900	134.1713
Current limit in permit (30-day average)		
Current limit in permit (daily maximum)	-----	-----
Final limit - AMEL	470.14	66.66
Final limit - MDEL	784.59	134.17
Max Effl Conc (MEC)	36.00	36.00

Appendix F-4: Discharger's Feasibility Analysis

City of Burlingame Wastewater Treatment Facility Infeasibility Analyses

Introduction

The City of Burlingame (City) received correspondence from the San Francisco Bay Regional Water Quality Control Board (Water Board) dated February 16, 2007 and March 15, 2007 regarding the Water Board's results of its reasonable potential analysis and containing a request for infeasibility analyses for cyanide and dioxin-TEQs, priority toxic pollutants subject to the *Policy for Implementation of Toxics Standards for Inland Surface Waters, Enclosed Bays and Estuaries of California* (known as the State Implementation Policy (SIP), effective 4/28/00 and amended 7/13/05). Infeasibility analyses for priority pollutants (constituents listed in the SIP) are required for the Water Board to issue interim limits and compliance schedules for these constituents. The infeasibility analyses contained herein for cyanide and dioxin-TEQs have been conducted in accordance with section 2.1 of the SIP. The analyses contained herein are submitted to the Water Board by the City to demonstrate the City's inability to comply with certain proposed water-quality based effluent limits for discharge from the Burlingame Wastewater Treatment Facility (WWTF).

Background

The SIP establishes statewide policy for National Pollutant Discharge Elimination System (NPDES) permitting. The SIP provides for the situation where an existing NPDES discharger cannot immediately comply with an effluent limitation derived from a California Toxics Rule (CTR) or more stringent Basin Plan criterion. The SIP allows for the adoption of interim effluent limits and a schedule to come into compliance with the final limit in such cases. To qualify for interim limits and a compliance schedule, the SIP requires that an existing discharger demonstrate that it is infeasible to achieve immediate compliance with the CTR based limit.

The term "infeasible" is defined in the SIP as "not capable of being accomplished in a successful manner within a reasonable period of time, taking into account economic, environmental, legal, social, and technological factors."

The SIP requires that the following information be submitted to the Water Board to support a finding of infeasibility:

(a) documentation that diligent efforts have been made to quantify pollutant levels in the discharge and sources of the pollutant in the waste stream, including the results of those efforts;
(b) documentation of source control and/or pollution minimization efforts currently under way or completed;
(c) a proposed schedule for additional or future source control measures, pollutant minimization or waste treatment; and
(d) a demonstration that the proposed schedule is as short as practicable.

Pollutants to be Evaluated

Infeasibility analyses and a compliance schedule justification for cyanide and dioxin-TEQs were requested by the Water Board in its February 16, 2007 and March 15, 2007 correspondence.

Effluent Limit Attainability

The proposed final effluent limits calculated for cyanide and dioxin-TEQs are compared to the maximum observed effluent concentrations at the WWTF in Table 1.

Table 1. Proposed Effluent Limits for the City of Burlingame Wastewater Treatment Facility

Pollutant	Water Quality Based Effluent Limits		Effluent Quality
	AMEL [a]	MDEL [b]	MEC [c]
Cyanide (µg/L)	2.4	6.4	26
Dioxin-TEQs (pg/L)	0.014	0.028	J 0.0014

[a] AMEL: average monthly effluent limit
[b] MDEL: maximum daily effluent limit
[c] MEC: maximum effluent concentration found in the Water Board's dataset
[d] The maximum effluent concentration was J-flagged, or qualified as DNQ (Detected, Not Quantified)

The final effluent limits shown above are calculated using procedures described in Section 1.4 of the SIP. Background values were taken from the Regional Monitoring Program (RMP) at the Yerba Buena Station. The receiving water is classified as salt water with aquatic life and fish consumption beneficial uses. A dilution of 10:1 is allowed when calculating effluent limits for cyanide (deep water discharge). No dilution is allowed for dioxin-TEQs because dioxins are bioaccumulative. The dioxin-TEQ limit is required because ambient concentrations exceed the applicable water quality objective. The limit is not due to high effluent concentrations. Other variables in the effluent limit calculations included the pollutants' coefficients of variation.

Maximum observed (detected) effluent concentrations shown in Table 1 are based on recent WWTF effluent quality data collected between October 2002 and October 2006 for cyanide and dioxin-TEQ, as presented in the Water Board's datasets. The ambient concentrations for dioxin-TEQ are based on samples collected between January 2002 and August 2003, as found in the report *Dioxins in San Francisco Bay, Conceptual Model/Impairment Assessment* (Clean Estuary Partnership, November 2004). As shown in the table above, the City may not be able to comply with proposed effluent limits for cyanide. It is unknown whether the City's effluent quality will comply with the dioxin-TEQ limits. Dioxin-TEQ was undetected in the majority of samples analyzed, but two samples were detected below the lower calibration level of the analytical instrument. The reported values were "qualified" by the laboratory to indicate that there was limited confidence in these results. As such, there is an insufficient number of dioxin-TEQ datapoints (detected or quantified) to guarantee compliance. The infeasibility analyses and compliance schedule justifications for the cyanide and dioxin-TEQ are discussed below.

Source Control and Pollution Prevention Efforts

Pretreatment Program

The City's pretreatment program was initiated in 1990 to protect the treatment facility and environment from adverse impacts from hazardous or toxic wastes discharged to the sewage system. There are currently no industrial dischargers that can be considered Significant Industrial Users (SIUs) or Categorical Industrial Users (CIUs) within the treatment facility's collection area. The pretreatment program covers the City's commercial businesses, including vehicle service stations, restaurants, dental

offices, veterinarians, laboratories, printers/copiers, photo processing centers, dry cleaners, laundromats, and medical facilities.

The pretreatment program includes visits by the WWTF inspectors to educate local businesses about pollution prevention.

Pollution Prevention Program

The City's pollution prevention program includes the following activities:

- Sewer Science Outreach Program with local high school, implemented in 2002. Ten chemistry classes are instructed by Environmental Compliance Inspectors with a focus on metals and mercury.
- Safe Medicine Disposal Days, implemented April 2007. A protected permanent collection site in the City of Burlingame.
- Bay Front Clean Up for City of Burlingame, implemented in 1999. The Environmental Compliance Department hosts two sites in the City of Burlingame for participants on the third Saturday of every September.
- Residential Pesticide Outreach Program, initiated in 2002, educates residents about the correct use of pesticides and non-chemical pest control alternatives, through pamphlet stands in City Hall and the Department of Parks and Recreations.
- A thermometer exchange program was begun in September 2001, each Earth Day at City Hall, where residents exchange mercury thermometers for non-hazardous thermometers.
- Tours of the Wastewater Treatment Facility, with a focus on residential and commercial impacts on water quality.
- Participation in outreach booths for San Mateo County Fair for dissemination of pollution prevention material since before 1999, with a focus on stormwater pollution prevention information.
- Participation in the annual Jazz in the Park and Art in the Park information booths since 2000. Veolia Water sponsors Jazz in the park with a $5000 a year contribution to attract performers. A booth is set up to question residents regarding pollution prevention information.
- A website containing local recycling information has been available since 2000.
- A program for Dental Mercury Control to ensure proper amalgam waste disposal was implemented by the Environmental Compliance Office in 2002.
- Educational Stormwater Surveys educate residents about the difference between sanitary sewers and stormwater non-point source runoff since 2004.
- TMS Commute Program (revised in 2002) for employees of the City of Burlingame reduces gasoline consumption. Incentives are offered to employees who participate in the program.

Individual Constituent Analysis

Cyanide

The maximum observed effluent concentration for cyanide between October 2003 and October 2006 is 26 µg/L (measured in May 4, 2005, out of 43 data points) which would exceed the proposed final AMEL of 2.4 µg/L and MDEL of 6.4 µg/L. In addition, the four next highest cyanide concentrations would also exceed the proposed MDEL. The statistical probabilities of compliance with the AMEL and MDEL are 47% and 83%, respectively. The City is at risk of non-compliance with the proposed final

AMEL 53% of the time. Therefore, the City may not be able to consistently comply with the proposed final limits. The effluent data for cyanide are shown with the proposed final effluent limits in Figure 1.

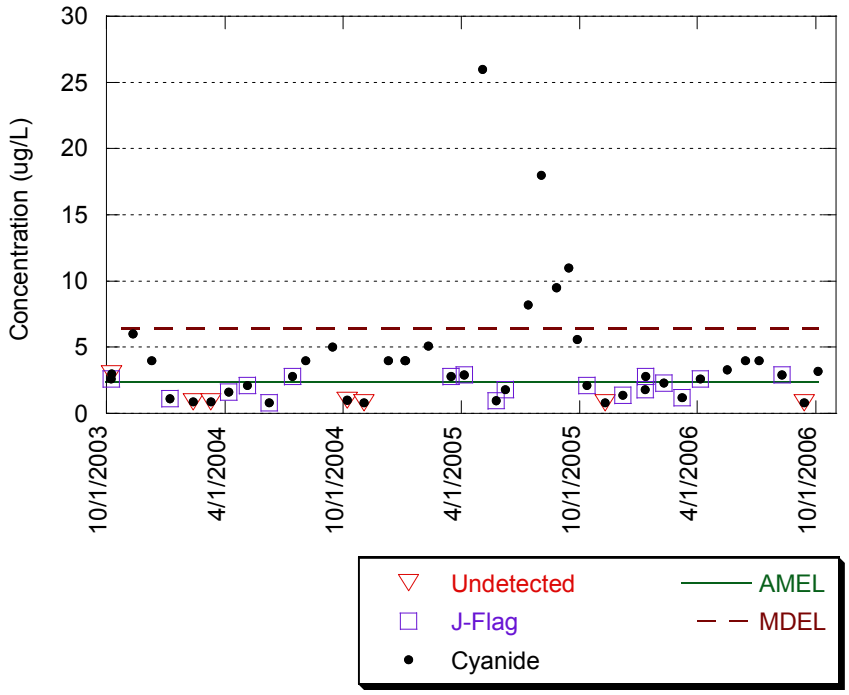

Figure 1. Effluent Cyanide Concentrations Compared to Proposed Final Effluent Limits

Cyanide has been identified as a constituent of concern, and is monitored in the influent, secondary effluent, and final effluent. Typically, cyanide is not present in wastewater influent but is generated in the treatment facility disinfection process, which would result in higher concentrations in the final effluent than the secondary effluent or influent.

Effluent monitoring for cyanide will continue as required by the City's NPDES permit, and monthly influent monitoring for cyanide will continue. The recently monitored influent data will be reviewed. If half of the influent data have been detected at levels exceeding the effluent during the previous monitoring year, source identification efforts will be initiated.

There is widespread evidence that the sampling techniques and EPA analytical method for cyanide are problematic and need to be adjusted. Currently, several special studies are being conducted by other wastewater agencies to determine if sample preservation plays a role in elevated cyanide levels being detected in effluent samples. The City considers that the maximum cyanide concentration of 26 ug/L is the result of an analytical error. Should cyanide continue to be detected in the effluent at levels that exceed the proposed final effluent limit, the City will coordinate with other wastewater agencies to determine appropriate sample preservation techniques to implement in order to avoid false readings.

Dioxin-TEQs

As shown in Table 1, the City may be capable of meeting the final effluent limits for dioxin-TEQs. However, there is limited, quantified data available to predict compliance. The City objects to use of qualified datapoints to determine effluent limits. Dioxin-TEQ data can be highly variable, due to sensitivity of the analytical procedures for dioxin congeners. The City's ability to comply with the

proposed effluent limits cannot be definitely determined. An interim limit or a maximum compliance schedule is requested in order to gather more information about dioxin and its presence in the City's wastewater.

The City has not previously identified dioxin as a pollutant of concern and, therefore, has not conducted pollution prevention activities that directly target this constituent. Effluent monitoring for dioxin will continue as required by the City's NPDES permit. If half of the effluent data are detected after 2 years of monitoring, influent bi-annual monitoring will commence. Should dioxins be detected consistently in the influent after two years of monitoring the City will evaluate potential dioxin sources in its service area and develop pollution prevention options as appropriate. Potential dioxin sources include bleached paper products, wood burning, diesel fuel vehicles, and 2,4-D (an herbicide).

Summary

This evaluation indicates that immediate compliance with proposed final effluent limits for cyanide is not feasible for the City. Immediate compliance with dioxin-TEQ limits cannot be determined at this time.

In accordance with the requirements of the SIP, the City requests that the Water Board refrain from the adoption of final effluent limits for cyanide and dioxin-TEQ. In lieu of final limits, the NPDES permit should include interim performance based limits (or a maximum compliance schedule) with which the City can comply. The City will continue monitoring and/or implement the source control actions listed in Table 2 for the constituents as appropriate. The schedules in Table 2 are as short as practicable.

Table 2. Proposed Source Control Actions

Pollutant	Proposed Action	Estimated Time to Complete
Cyanide	• Influent monitoring	• Ongoing
	• Source identification study	• If half of influent concentrations over the last year exceed effluent concentrations.
	• Refine sample preservation techniques	• In collaboration with other agencies, should effluent cyanide concentrations continue to exceed the proposed effluent limits
Dioxin-TEQs	• Potential influent monitoring	• Bi-annually, IF ½ of the effluent concentrations are detected after 2 additional years of effluent monitoring subsequent to permit adoption.
	• Source identification study	• After 2 years of influent monitoring, if the influent concentrations are consistently detected.

ATTACHMENT G – REGIONAL WATER BOARD ATTACHMENTS

The following documents are part of this Order but are not physically attached due to volume. They are available on the Internet at: http://www.waterboards.ca.gov/sanfranciscobay/Download.htm.

- Self-Monitoring Program, Part A (August 1993)
- Standard Provisions and Reporting Requirements, August 1993
- Regional Water Board Resolution No. 74-10
- August 6, 2001 Regional Water Board staff letter, "Requirement for Monitoring of Pollutants in Effluent and Receiving Water to Implement New Statewide Regulations and Policy

ATTACHMENT H – PRETREATMENT PROGRAM REQUIREMENTS

Pretreatment Program Provisions

1. The Discharger shall implement all pretreatment requirements contained in 40 CFR 403, as amended. The Discharger shall be subject to enforcement actions, penalties, and fines as provided in the Clean Water Act (33 USC 1351 et seq.), as amended. The Discharger shall implement and enforce their respective Approved Pretreatment Programs or modified Pretreatment Programs as directed by the Board's Executive Officer or the EPA. The EPA and/or the State may initiate enforcement action against an industrial user for noncompliance with applicable standards and requirements as provided in the Clean Water Act.

2. The Discharger shall enforce the requirements promulgated under Sections 307(b), 307(c), 307(d) and 402(b) of the Clean Water Act. The Discharger shall cause industrial users subject to Federal Categorical Standards to achieve compliance no later than the date specified in those requirements or, in the case of a new industrial user, upon commencement of the discharge.

3. The Discharger shall perform the pretreatment functions as required in 40 CFR Part 403 and amendments or modifications thereto including, but not limited to:

   i. Implement the necessary legal authorities to fully implement the pretreatment regulations as provided in 40 CFR 403.8(f)(1);

   ii. Implement the programmatic functions as provided in 40 CFR 403.8(f)(2);

   iii. Publish an annual list of industrial users in significant noncompliance as provided per 40 CFR 403.8(f)(2)(vii);

   iv. Provide for the requisite funding and personnel to implement the pretreatment program as provided in 40 CFR 403.8(f)(3); and

   v. Enforce the national pretreatment standards for prohibited discharges and categorical standards as provided in 40 CFR 403.5 and 403.6, respectively.

4. The Discharger shall submit annually a report to the EPA Region 9, the State Board and the Board describing the Discharger's respective pretreatment program activities over the previous twelve months. In the event that the Discharger is not in compliance with any conditions or requirements of this permit, the Discharger shall also include the reasons for noncompliance and a plan and schedule for achieving compliance. The report shall contain, but is not limited to, the information specified in **Appendix A** entitled, "Requirements for Pretreatment Annual Reports," which is made a part of this Order. The annual report is due on the last day of February each year.

5. The Discharger shall submit semiannual pretreatment reports to the EPA Region 9, the State Board and the Board describing the status of their respective significant industrial users (SIUs). The report shall contain, but not is limited to, the information specified in **Appendix B** entitled, "Requirements for Semiannual Pretreatment Reports," which is made part of this Order. The semiannual reports are due July 31st (for the period January

through June) and January 31st (for the period July through December) of each year. The Executive Officer may exempt a Discharger from the semiannual reporting requirements on a case by case basis subject to State Board and EPA's comment and approval.

6. The Discharger may combine the annual pretreatment report with the semiannual pretreatment report (for the July through December reporting period). The combined report shall contain all of the information requested in Appendices A and B and will be due on January 31st of each year.

7. The Discharger shall conduct the monitoring of its treatment plant's influent, effluent, and sludge as described in **Appendix C** entitled, "Requirements for Influent, Effluent and Sludge Monitoring," which is made part of this Order. The results of the sampling and analysis, along with a discussion of any trends, shall be submitted in the semiannual reports. A tabulation of the data shall be included in the annual pretreatment report. The Executive Officer may require more or less frequent monitoring on a case by case basis.

APPENDIX A
REQUIREMENTS FOR PRETREATMENT ANNUAL REPORTS

The Pretreatment Annual Report is due each year on the last day of February. [If the annual report is combined with the semiannual report (for the July through December period) the submittal deadline is January 31st of each year.] The purpose of the Annual Report is 1) to describe the status of the Publicly Owned Treatment Works (POTW) pretreatment program and 2) to report on the effectiveness of the program, as determined by comparing the results of the preceding year's program implementation. The report shall contain at a minimum, but is not limited to, the following information:

1. Cover Sheet

The cover sheet must contain the name(s) and National Pollutant Discharge Elimination Discharge System (NPDES) permit number(s) of those POTWs that are part of the Pretreatment Program. Additionally, the cover sheet must include: the name, address and telephone number of a pretreatment contact person; the period covered in the report; a statement of truthfulness; and the dated signature of a principal executive officer, ranking elected official, or other duly authorized employee who is responsible for overall operation of the POTW (40 CFR 403.12(j)).

2. Introduction

The Introduction shall include any pertinent background information related to the City/ District/Agency, the POTW and/or the Industrial base of the area. Also, this section shall include an update on the status of any Pretreatment Compliance Inspection (PCI) tasks, Pretreatment Performance Evaluation tasks, Pretreatment Compliance Audit (PCA) tasks, Cleanup and Abatement Order (CAO) tasks, or other pretreatment-related enforcement actions required by the Board or the EPA. A more specific discussion shall be included in the section entitled, "Program Changes."

3. Definitions

This section shall contain a list of key terms and their definitions that the POTW uses to describe or characterize elements of its pretreatment program.

4. Discussion of Upset, Interference and Pass Through

This section shall include a discussion of Upset, Interference or Pass Through incidents, if any, at the POTW(s) that the Discharger knows of or suspects were caused by industrial discharges. Each incident shall be described, at a minimum, consisting of the following information:

a. a description of what occurred;

b. a description of what was done to identify the source;

c. the name and address of the IU responsible

d. the reason(s) why the incident occurred;

e. a description of the corrective actions taken; and

f. an examination of the local and federal discharge limits and requirements for the purposes of determining whether any additional limits or changes to existing requirements may be necessary to prevent other Upset, Interference or Pass Through incidents.

5. Influent, Effluent and Sludge Monitoring Results

This section shall provide a summary of the analytical results from the "Influent, Effluent and Sludge Monitoring" as specified in Appendix C. The results should be reported in a summary matrix that lists monthly influent and effluent metal results for the reporting year.

A graphical representation of the influent and effluent metal monitoring data for the past five years shall also be provided with a discussion of any trends.

6. Inspection and Sampling Program

This section shall contain at a minimum, but is not limited to, the following information:

a. Inspections: the number of inspections performed for each type of IU; the criteria for determining the frequency of inspections; the inspection format procedures;

b. Sampling Events: the number of sampling events performed for each type of IU; the criteria for determining the frequency of sampling; the chain of custody procedures.

7. Enforcement Procedures

This section shall provide information as to when the approved Enforcement Response Plan (ERP) had been formally adopted or last revised. In addition, the date the finalized ERP was submitted to the Board shall also be given.

8. Federal Categories

This section shall contain a list of all of the federal categories that apply to the POTW. The specific category shall be listed including the subpart and 40 CFR section that applies. The maximum and average limits for the each category shall be provided. This list shall indicate the number of Categorical Industrial Users (CIUs) per category and the CIUs that are being regulated pursuant to the category. The information and data used to determine the limits for those CIUs for which a combined waste stream formula is applied shall also be provided.

9. Local Standards

This section shall include a table presenting the local limits.

10. Updated List of Regulated SIUs

This section shall contain a complete and updated list of the Discharger's Significant Industrial Users (SIUs), including their names, addresses, and a brief description of the SIU's type of business. The list shall include all deletions and additions keyed to the list as submitted in the previous annual report. All deletions shall be briefly explained.

11. Compliance Activities

a. **Inspection and Sampling Summary:** This section shall contain a summary of all the inspections and sampling activities conducted by the Discharger over the past year to gather information and data regarding the SIUs. The summary shall include:

(1) the number of inspections and sampling events conducted for each SIU;

(2) the quarters in which these activities were conducted; and

(3) the compliance status of each SIU, delineated by quarter, and characterized using all applicable descriptions as given below:

(a) in consistent compliance;

(b) in inconsistent compliance;

(c) in significant noncompliance;

(d) on a compliance schedule to achieve compliance, (include the date final compliance is required);

(e) not in compliance and not on a compliance schedule;

(f) compliance status unknown, and why not.

b. **Enforcement Summary:** This section shall contain a summary of the compliance and enforcement activities during the past year. The summary shall include the names of all the SIUs affected by the following actions:

(1) Warning letters or notices of violations regarding SIUs' apparent noncompliance with or violation of any federal pretreatment categorical standards and/or requirements, or local limits and/or requirements. For each notice, indicate whether it was for an infraction of a federal or local standard/limit or requirement.

(2) Administrative Orders regarding the SIUs' apparent noncompliance with or violation of any federal pretreatment categorical standards and/or requirements, or local limits and/or requirements. For each notice, indicate whether it was for an infraction of a federal or local standard/limit or requirement.

(3) Civil actions regarding the SIUs' apparent noncompliance with or violation of any federal pretreatment categorical standards and/or requirements, or local limits and/or requirements. For each notice, indicate whether it was for an infraction of a federal or local standard/limit or requirement.

(4) Criminal actions regarding the SIUs' apparent noncompliance with or violation of any federal pretreatment categorical standards and/or requirements, or local limits and/or requirements. For each notice, indicate whether it was for an infraction of a federal or local standard/limit or requirement.

(5) Assessment of monetary penalties. Identify the amount of penalty in each case and reason for assessing the penalty.

(6) Order to restrict/suspend discharge to the POTW.

(7) Order to disconnect the discharge from entering the POTW.

12. Baseline Monitoring Report Update

This section shall provide a list of CIUs that have been added to the pretreatment program since the last annual report. This list of new CIUs shall summarize the status of the respective Baseline Monitoring Reports (BMR). The BMR must contain all of the information specified in 40 CFR 403.12(b). For each of the new CIUs, the summary shall indicate when the BMR was due; when the CIU was notified by the POTW of this requirement; when the CIU submitted the report; and/or when the report is due.

13. Pretreatment Program Changes

This section shall contain a description of any significant changes in the Pretreatment Program during the past year including, but not limited to: legal authority, local limits, monitoring/ inspection program and frequency, enforcement protocol, program's administrative structure, staffing level, resource requirements and funding mechanism. If the manager of the pretreatment program changes, a revised organizational chart shall be included. If any element(s) of the program is in the process of being modified, this intention shall also be indicated.

14. Pretreatment Program Budget

This section shall present the budget spent on the Pretreatment Program. The budget, either by the calendar or fiscal year, shall show the amounts spent on personnel, equipment, chemical analyses and any other appropriate categories. A brief discussion of the source(s) of funding shall be provided.

15. Public Participation Summary

This section shall include a copy of the public notice as required in 40 CFR 403.8(f)(2)(vii). If a notice was not published, the reason shall be stated.

16. Sludge Storage and Disposal Practice

This section shall have a description of how the treated sludge is stored and ultimately disposed. The sludge storage area, if one is used, shall be described in detail. Its location, a description of the containment features and the sludge handling procedures shall be included.

17. PCS Data Entry Form

The annual report shall include the PCS Data Entry Form. This form shall summarize the enforcement actions taken against SIUs in the past year. This form shall include the following information: the POTW name, NPDES Permit number, period covered by the report, the number of SIUs in significant noncompliance (SNC) that are on a pretreatment compliance

schedule, the number of notices of violation and administrative orders issued against SIUs, the number of civil and criminal judicial actions against SIUs, the number of SIUs that have been published as a result of being in SNC, and the number of SIUs from which penalties have been collected.

18. Other Subjects

Other information related to the Pretreatment Program that does not fit into one of the above categories should be included in this section.

Signed copies of the reports shall be submitted to the Regional Administrator at USEPA, the State Water Resources Control Board and the Board at the following addresses:

Regional Administrator
United States Environmental Protection Agency
Region 9, Mail Code: WTR-7
Clean Water Act Compliance Office
Water Division
75 Hawthorne Street
San Francisco, CA 94105

Pretreatment Program Manager
Regulatory Unit
State Water Resources Control Board
Division of Water Quality
1001 I Street
Sacramento, CA 95814

Pretreatment Coordinator
NPDES Permits Division
SF Bay Regional Water Quality Control Board
1515 Clay Street, Suite 1400
Oakland, CA 94612

APPENDIX B
REQUIREMENTS FOR SEMIANNUAL PRETREATMENT REPORTS

The semiannual pretreatment reports are due on July 31st (for pretreatment program activities conducted from January through June) and January 31st (for pretreatment activities conducted from July through December) of each year, unless an exception has been granted by the Regional Water Board's Executive Officer. The semiannual reports shall contain, at a minimum, but are not limited to, the following information:

1. Influent, Effluent and Sludge Monitoring

The influent, effluent and sludge monitoring results shall be included in the report. The analytical laboratory report shall also be included, with the QA/QC data validation provided upon request. A description of the sampling procedures and a discussion of the results shall be given. (Please see Appendix C for specific detailed requirements.) The contributing source(s) of the parameters that exceed NPDES limits shall be investigated and discussed. In addition, a brief discussion of the contributing source(s) of all organic compounds identified shall be provided.

The Discharger has the option to submit all monitoring results via an electronic reporting format approved by the Executive Officer. The procedures for submitting the data will be similar to the electronic submittal of the NPDES self-monitoring reports as outlined in the December 17, 1999, Regional Water Board letter, Official Implementation of Electronic Reporting System (ERS). The Discharger shall contact the Board's ERS Project Manager for specific details in submitting the monitoring data.

If the monitoring results are submitted electronically, the analytical laboratory reports (along with the QA/QC data validation) should be kept at the Discharger's facility.

2. Industrial User Compliance Status

This section shall contain a list of all Significant Industrial Users (SIUs) that were not in consistent compliance with all pretreatment standards/limits or requirements for the reporting period. The compliance status for the previous reporting period shall also be included. Once the SIU has determined to be out of compliance, the SIU shall be included in the report until consistent compliance has been achieved. A brief description detailing the actions that the SIU undertook to come back into compliance shall be provided.

For each SIU on the list, the following information shall be provided:

a. Indicate if the SIU is subject to Federal categorical standards; if so, specify the category including the subpart that applies.

b. For SIUs subject to Federal Categorical Standards, indicate if the violation is of a categorical or local standard.

c. Indicate the compliance status of the SIU for the two quarters of the reporting period.

d. For violations/noncompliance occurring in the reporting period, provide (1) the date(s) of violation(s); (2) the parameters and corresponding concentrations exceeding the limits and

the discharge limits for these parameters and (3) a brief summary of the noncompliant event(s) and the steps that are being taken to achieve compliance.

3. POTW's Compliance with Pretreatment Program Requirements

This section shall contain a discussion of the Discharger's compliance status with the Pretreatment Program Requirements as indicated in the latest Pretreatment Compliance Audit (PCA) Report, Pretreatment Compliance Inspection (PCI) Report or Pretreatment Performance Evaluation (PPE) Report. It shall contain a summary of the following information:

a. Date of latest PCA, PCI or PPE and report.

b. Date of the Discharger's response.

c. List of unresolved issues.

d. Plan and schedule for resolving the remaining issues.

The reports shall be signed by a principal executive officer, ranking elected official, or other duly authorized employee who is responsible for the overall operation of the Publicly Owned Treatment Works (POTW) (40 CFR 403.12(j)). Signed copies of the reports shall be submitted to the Regional Administrator at USEPA, the State Water Resources Control Board and the Board at the following addresses:

Regional Administrator
United States Environmental Protection Agency
Region 9, Mail Code: WTR-7
Clean Water Act Compliance Office
Water Division
75 Hawthorne Street
San Francisco, CA 94105

Pretreatment Program Manager
Regulatory Unit
State Water Resources Control Board
Division of Water Quality
1001 I Street
Sacramento, CA 95814

Pretreatment Coordinator
NPDES Permits Division
SF Bay Regional Water Quality Control Board
1515 Clay Street, Suite 1400
Oakland, CA 94612

APPENDIX C
REQUIREMENTS FOR INFLUENT, EFFLUENT AND SLUDGE MONITORING

The Discharger shall conduct sampling of their respective treatment plant's influent, effluent and sludge at the frequency as shown in Tables 1and 3 of the Self Monitoring Program**.**

The monitoring and reporting requirements of the POTW's Pretreatment Program are in addition to those specified in the individual POTW's NPDES permit. Any subsequent modifications of the NPDES requirements shall be adhered to and shall not affect the requirements described in this Appendix unless written notice from the Regional Water Board is received. When sampling periods coincide, one set of test results, reported separately, may be used for those parameters that are required to be monitored in both the Discharger's NPDES permit and Pretreatment Program. Monitoring reports required by this Order shall be sent to the Pretreatment Coordinator.

1. Influent and Effluent Monitoring

The Discharger shall monitor for the parameters using the required test methods listed in Table 3 of the Self Monitoring Program. Any test method substitutions must have received prior written Regional Water Board approval. In addition, unless instructed otherwise in writing, the Discharger shall continue to monitor for those parameters at the frequency stated in Table 1. Influent and Effluent sampling locations shall be the same as those sites specified in the POTW's Self-Monitoring Program as set forth in its NPDES permit.

The influent and effluent sampled should be taken during the same 24-hour period. All samples must be representative of daily operations. A grab sample shall be used for volatile organic compounds, cyanide and phenol. In addition, any samples for oil and grease, polychlorinated biphenyls, dioxins/furans, and polynuclear aromatic hydrocarbons shall be grab samples. For all other pollutants, 24-hour composite samples must be obtained through flow-proportioned composite sampling. Sampling and analysis shall be performed in accordance with the techniques prescribed in 40 CFR Part 136 and amendments thereto. For effluent monitoring, the reporting limits for the individual parameters shall be at or below the minimum levels (MLs) as stated in the Policy for Implementation of Toxics Standards for Inland Surface Waters, Enclosed Bays, and Estuaries of California (2000) [also known as the State Implementation Policy (SIP)]; any revisions to the MLs shall be adhered to. If a parameter does not have a stated minimum level, then the Discharger shall conduct the analysis using the lowest commercially available and reasonably achievable detection levels.

The following standardized report format should be used for submittal of the influent and effluent monitoring report. A similar structured format may be used but will be subject to Regional Water Board approval. The monitoring reports shall be submitted with the Semiannual Reports.

A. Sampling Procedures – This section shall include a brief discussion of the sample locations, collection times, how the sample was collected (i.e., direct collection using vials or bottles, or other types of collection using devices such as automatic samplers, buckets, or beakers), types of containers used, storage procedures and holding times. Include description of prechlorination and chlorination/dechlorination practices during the sampling periods.

B. Method of Sampling Dechlorination – A brief description of the sample dechlorination method prior to analysis shall be provided.

C. Sample Compositing – The manner in which samples are composited shall be described. If the compositing procedure is different from the test method specifications, a reason for the variation shall be provided.

D. Data Validation – All quality assurance/quality control (QA/QC) methods to be used shall be discussed and summarized. These methods include, but are not limited to, spike samples, split samples, blanks and standards. Ways in which the QA/QC data will be used to qualify the analytical test results shall be identified. A certification statement shall be submitted with this discussion stating that the laboratory QA/QC validation data has been reviewed and has met the laboratory acceptance criteria. The QA/QC validation data shall be submitted to the Board upon request.

E. A tabulation of the test results shall be provided.

F. Discussion of Results – The report shall include a complete discussion of the test results. If any pollutants are detected in sufficient concentration to upset, interfere or pass through plant operations, the type of pollutant(s) and potential source(s) shall be noted, along with a plan of action to control, eliminate, and/or monitor the pollutant(s). Any apparent generation and/or destruction of pollutants attributable to chlorination/dechlorination sampling and analysis practices shall be noted.

2. Sludge Monitoring

Sludge should be sampled in the same 24-hour period during which the influent and effluent are sampled except as noted in (C) below. The same parameters required for influent and effluent analysis shall be included in the sludge analysis. The sludge analyzed shall be a composite sample of the sludge for final disposal consisting of:

A. Sludge lagoons – 20 grab samples collected at representative equidistant intervals (grid pattern) and composited as a single grab, or

B. Dried stockpile – 20 grab samples collected at various representative locations and depths and composited as a single grab, or

C. Dewatered sludge- daily composite of 4 representative grab samples each day for 5 days taken at equal intervals during the daily operating shift taken from a) the dewatering units or b) from each truckload, and shall be combined into a single 5-day composite.

The USEPA manual, POTW Sludge Sampling and Analysis Guidance Document, August 1989, containing detailed sampling protocols specific to sludge is recommended as a guidance for sampling procedures. The USEPA manual Analytical Methods of the National Sewage Sludge Survey, September 1990, containing detailed analytical protocols specific to sludge, is recommended as a guidance for analytical methods.

In determining if the sludge is a hazardous waste, the Dischargers shall adhere to Article 2, “Criteria for Identifying the Characteristics of Hazardous Waste,” and Article 3, “Characteristics

of Hazardous Waste," of Title 22, California Code of Regulations, Sections 66261.10 to 66261.24 and all amendments thereto.

Sludge monitoring reports shall be submitted with the appropriate Semiannual Report. The following standardized report format should be used for submittal of the report. A similarly structured form may be used but will be subject to Regional Water Board approval.

A. Sampling procedures – Include sample locations, collection procedures, types of containers used, storage/refrigeration methods, compositing techniques and holding times. Enclose a map of sample locations if sludge lagoons or stockpiled sludge is sampled.

B. Data Validation – All quality assurance/quality control (QA/QC) methods to be used shall be discussed and summarized. These methods include, but are not limited to, spike samples, split samples, blanks and standards. Ways in which the QA/QC data will be used to qualify the analytical test results shall be identified. A certification statement shall be submitted with this discussion stating that the laboratory QA/QC validation data has been reviewed and has met the laboratory acceptance criteria. The QA/QC validation data shall be submitted to the Regional Water Board upon request.

C. Test Results – Tabulate the test results and include the percent solids.

D. Discussion of Results – The report shall include a complete discussion of test results. If the detected pollutant(s) is reasonably deemed to have an adverse effect on sludge disposal, a plan of action to control, eliminate, and/or monitor the pollutant(s) and the known or potential source(s) shall be included. Any apparent generation and/or destruction of pollutants attributable to chlorination/ dechlorination sampling and analysis practices shall be noted.

The Discharger shall also provide any influent, effluent or sludge monitoring data for nonpriority pollutants that the permittee believes may be causing or contributing to Interference, Pass Through or adversely impacting sludge quality.