Linda S. Adams
Secretary for
Environmental Protection

California Regional Water Quality Control Board

San Francisco Bay Region

1515 Clay Street, Suite 1400, Oakland CA 94612
(510) 622-2300 • Fax (510) 622-2460
http://www.waterboards.ca.gov/sanfranciscobay

Arnold Schwarzenegger
Governor

ORDER NO. R2-2009-0018
NPDES NO. CA0038547

The following Discharger is subject to waste discharge requirements set forth in this Order.

Table 1. Discharger Information

Discharger	Delta Diablo Sanitation District
Name of Facility	Delta Diablo Sanitation District Wastewater Treatment Plant and its associated collection system
Facility Address	2500 Pittsburg-Antioch Highway
	Antioch, CA 94509
	Contra Costa County
The U.S. Environmental Protection Agency (USEPA) and the Regional Water Quality Control Board have classified this discharge as a major discharge.	

The discharge by the Delta Diablo Sanitation District Wastewater Treatment Plant (Plant) from the discharge point identified below is subject to waste discharge requirements as set forth in this Order.

Table 2. Discharge Location

Discharge Point	Effluent Description	Discharge Point Latitude	Discharge Point Longitude	Receiving Water
001	Secondary Treated Municipal Wastewater	38º 01' 40" N	121º 50' 14" W	New York Slough

Table 3. Administrative Information

This Order was adopted by the Regional Water Board on:	**March 11, 2009**
This Order shall become effective on:	**May 1, 2009**
This Order shall expire on:	**April 30, 2014**
The Discharger shall file a Report of Waste Discharge in accordance with title 23, California Code of Regulations, as application for issuance of new waste discharge requirements no later than:	**180 days prior to the Order expiration date**

I, Bruce H. Wolfe, Executive Officer, do hereby certify that this Order with all attachments is a full, true, and correct copy of an Order adopted by the California Regional Water Quality Control Board, San Francisco Bay Region, on March 11, 2009.

Digitally signed by Bruce Wolfe
Date: 2009.03.16 16:49:04 -07'00'

Bruce H. Wolfe, Executive Officer

Table of Contents

I. Facility Information 4
II. Findings 4
III. Discharge Prohibitions 10
IV. Effluent Limitations and Discharge Specifications 11
A. Effluent Limitations – Discharge Point 001 11
B. Land Discharge Specifications 15
C. Reclamation Specifications 15
V. Receiving Water Limitations 15
A. Surface Water Limitations 15
B. Groundwater Limitations 16
VI. Provisions 16
A. Standard Provisions 16
B. Monitoring and Reporting Program (MRP) Requirements 16
C. Special Provisions 16
1. Reopener Provisions 16
2. Special Studies, Technical Reports and Additional Monitoring Requirements 17
3. Best Management Practices and Pollution Minimization 18
4. Construction, Operation, and Maintenance Specifications 20
5. Special Provisions for POTWs 21
6. Compliance Schedule 24
7. Copper Action Plan 24
8. Cyanide Action Plan 26
9. Plant Expansion 26
VII. Compliance Determination 27

Tables

Table 1. Discharger Information 1
Table 2. Discharge Location 1
Table 3. Administrative Information 1
Table 4. Facility Information 4
Table 5. Beneficial Uses of New York Slough 7
Table 6. Effluent Limitations for Conventional and Non-conventional Pollutants – Discharge Point 001 11
Table 7. Effluent Limitations for Toxic Pollutants 12
Table 8. Minimum Levels for Pollutants with Effluent Limitations 12
Table 9. Interim Effluent Limitation for Dioxin-TEQ 13
Table 10. Dioxin-TEQ Compliance Schedule 24
Table 11. Copper Action Plan 25
Table 12. Cyanide Action Plan 26

Attachments

Attachment A – Definitions A-1
Attachment B – Facility Map B-1
Attachment C – Process Flow Diagram C-1
Attachment D – Federal Standard Provisions D-1
Attachment E – Monitoring and Reporting Program (MRP) E-1
Attachment F – Fact Sheet F-1
Attachment G – The following documents are part of this Permit, but are not physically attached due to volume. They are available on the internet at www.waterboards.ca.gov/sanfranciscobay/
- Self-Monitoring Program, Part A, adopted August 1993
- Standard Provisions and Reporting Requirements, August 1993
- August 6, 2001 Staff Letter: *Requirement for Priority Pollutant Monitoring in Receiving Water and Wastewater Discharges*
- Regional Water Board Resolution 74-10

Attachment H – Pretreatment Requirements H-1

I. FACILITY INFORMATION

The following Discharger is subject to the waste discharge requirements set forth in this Order:

Table 4. Facility Information

Discharger	Delta Diablo Sanitation District
Name of Facility	Delta Diablo Sanitation District Wastewater Treatment Plant and its collection system
Facility Address	2500 Pittsburg-Antioch Highway
	Antioch, CA 94509
	Contra Costa County
Facility Contact, Title, and Phone	Gary Darling, General Manager, (925) 756-1920
Mailing Address	Same as Facility Address
Type of Facility	Publicly Owned Treatment Works
Facility Design Flow	16.5 MGD (average dry weather treatment capacity) 26.0 MGD (peak wet weather treatment capacity) 22.7 MGD (average dry weather capacity subject to conditions in Provision VI.C.9) 35.8 MGD (future peak wet weather capacity subject to conditions in Provision VI.C.9)
Service Areas	Cities of Antioch and Pittsburg and the unincorporated community of Bay Point
Service Population	189,000

II. FINDINGS

The California Regional Water Quality Control Board, San Francisco Bay Region (hereinafter the Regional Water Board), finds:

A. Background. The Delta Diablo Sanitation District (hereinafter the "Discharger") is currently discharging under Orders No. R2-2003-0114 and R2-2004-027 (Amendment) related to National Pollutant Discharge Elimination System (NPDES) Permit No. CA0038547. The Discharger submitted a Report of Waste Discharge, dated June 30, 2008, and applied to renew its NPDES permit to discharge up to 16.5 MGD of secondary treated wastewater (average dry weather flow) from the Delta Diablo Sanitation District Wastewater Treatment Plant.

For the purposes of this Order, references to the "discharger" or "permittee" in applicable federal and state laws, regulations, plans, or policy are held to be equivalent to references to the Discharger herein.

B. Facility Description. The Discharger owns and operates the Delta Diablo Sanitation District Wastewater Treatment Plant (hereinafter "Plant"), which provides secondary treatment of wastewater from domestic, commercial, and industrial sources from Pittsburg and Antioch and the unincorporated community of Bay Point. The current total service population is approximately

189,000 (2008 estimate). The average daily discharge rate was 9.5 MGD, based on flow data from 2004-2008. During that period, the highest maximum daily effluent flow rate was 19.7 MGD.

The Discharger provides wastewater collection services for the unincorporated community of Bay Point, and conveyance services for Bay Point, Antioch and Pittsburg. The cities of Antioch and Pittsburg own, operate and maintain satellite collection systems that feed into the Discharger's conveyance system. The Discharger owns and operates about 115 km of sewer lines, five flow equalization storage facilities, and six pump stations.

Wastewater treatment processes at the Plant include screening and grit removal, primary clarification, biological treatment with trickling towers and/or aeration basins, secondary clarification, disinfection (sodium hypochlorite), and dechlorination (sodium bisulfite). Peak wet weather flows are managed with a 2.2 million gallon (MG) flow equalization tank, a 1 MG equalization basin, and a 12.8 MG emergency retention pond, in addition to approximately 4 MG of storage in collection system pump stations. All influent flows receive primary treatment. During periods of exceptionally high flows, primary-treated flows in excess of the trickling tower capacity are diverted to the storage basins and returned to the trickling towers for secondary treatment once influent flow subsides.

About half of the secondary-treated wastewater undergoes tertiary treatment at the Discharger's Recycled Water Facility. Most of this water is used for cooling water makeup at the Delta and Los Medanos Energy Centers, with a small amount (less than 1%) used for irrigation at local parks. The power plants return approximately 2 MGD of cooling tower blowdown to the Plant, where it is combined with secondary-treated wastewater and is chlorinated and dechlorinated prior to discharge.

The Discharger has received requests for additional recycled water (new irrigation sites and power plants). In response, the Discharger plans to recycle more of its secondary-treated effluent and possibly obtain recycled water from outside its service area. The Discharger is also considering use of its outfall for disposal of a potential brine discharge from a reverse osmosis desalination plant. If all of these projects are implemented, the total discharge through Outfall 001 could be up to 23.4 MGD (average annual flow). The Discharger must complete improvements to the Plant to accommodate the increased flow. These improvements are scheduled to be complete in 2013.

Biosolids are concentrated using a gravity belt thickener, anaerobically digested, and dewatered by centrifuge. Biosolids are placed in the Vasco Road Landfill or the Potrero Hills Landfill as alternative daily cover, or are applied to land.

Attachment B provides a map of the area around the Plant. Attachment C provides a flow schematic of the Plant.

C. Legal Authorities. This Order is issued pursuant to Clean Water Act (CWA) section 402 and implements regulations adopted by the United States Environmental Protection Agency (USEPA) and Chapters 5.5, Division 7 of the California Water Code (CWC) (commencing with section 13370). It shall serve as an NPDES permit for point source discharges from the Plant to surface waters. This Order also serves as Waste Discharge Requirements (WDRs) pursuant to Article 4, Chapter 4, Division 7 of the CWC (commencing with section 13260).

D. Background and Rationale for Requirements. The Regional Water Board developed the requirements in this Order based on information submitted as part of the application, through monitoring and reporting programs, and through other available sources. The Fact Sheet (Attachment F), which contains background information and rationale for requirements of the Order, is hereby incorporated into this Order and constitutes part of the Findings for this Order. Attachments A through E and G through H are also incorporated into this Order.

E. California Environmental Quality Act (CEQA). Under CWC section 13389, this action to adopt an NPDES permit is exempt from the provisions of CEQA.

F. Technology-Based Effluent Limitations. CWA Section 301(b) and NPDES regulations at 40 CFR 122.44 require that permits include conditions meeting applicable technology-based requirements at minimum, and any more stringent effluent limitations necessary to meet applicable water quality standards. The discharge authorized by this Order must meet minimum federal technology-based requirements based on Secondary Treatment Standards at 40 CFR 133. A detailed discussion of technology-based effluent limitation development is included in the Fact Sheet.

G. Water Quality-Based Effluent Limitations. CWA section 301(b) and NPDES regulations at 40 CFR 122.44(d) require that permits include limitations more stringent than applicable federal technology-based requirements where necessary to achieve applicable water quality standards.

NPDES regulations at 40 CFR 122.44(d)(1)(i) mandate that permits include effluent limitations for all pollutants that are or may be discharged at levels that have the reasonable potential to cause or contribute to an exceedance of a water quality standard, including numeric and narrative objectives within a standard. Where reasonable potential has been established for a pollutant that has no numeric criterion or objective, water quality-based effluent limitations (WQBELs) must be established using (1) USEPA criteria guidance under CWA section 304(a), supplemented where necessary by other relevant information; (2) an indicator parameter for the pollutant of concern; or (3) a calculated numeric water quality criterion, such as a proposed state criterion or policy interpreting the state's narrative criterion, supplemented with other relevant information, as provided in 40 CFR 122.44(d)(1)(vi).

H. Water Quality Control Plans. *The Water Quality Control Plan for the San Francisco Bay Basin* (the Basin Plan) is the Regional Water Board's master water quality control planning document. It designates beneficial uses and water quality objectives for waters of the State, including surface waters and groundwater. It also includes programs of implementation to achieve water quality objectives. The Basin Plan was duly adopted by the Regional Water Board and approved by the State Water Resources Control Board (State Water Board), USEPA, and the Office of Administrative Law, as required.

The Basin Plan states that the beneficial uses of any specifically identified water body generally apply to its tributaries. The Basin Plan does not specifically identify beneficial uses for New York Slough, but does identify present and potential uses for the Sacramento-San Joaquin Delta, which includes New York Slough.

Beneficial uses applicable to New York Slough are summarized in Table 5.

Table 5. Beneficial Uses of New York Slough

Discharge Point	Receiving Water Name	Beneficial Uses
001	New York Slough	Agricultural Supply (AGR) Municipal and Domestic Supply (MUN) Groundwater Recharge (GWR) Industrial Service Supply (IND) Industrial Process Supply (PRO) Ocean, Commercial, and Sport Fishing (COMM) Estuarine Habitat (EST) Fish Migration (MIGR) Preservation of Rare and Endangered Species (RARE) Fish Spawning (SPWN) Wildlife Habitat (WILD) Water Contact Recreation (REC1) Non-Contact Water Recreation (REC2) Navigation (NAV)

Requirements of this Order implement the Basin Plan.

I. **National Toxics Rule (NTR) and California Toxics Rule (CTR)**. USEPA adopted the NTR on December 22, 1992, and later amended it on May 4, 1995, and November 9, 1999. About forty criteria in the NTR apply in California. On May 18, 2000, USEPA adopted the CTR. The CTR promulgated new toxics criteria for California and, in addition, incorporated the previously adopted NTR criteria that were applicable in the State. The CTR was amended on February 13, 2001. These rules contain water quality criteria for priority pollutants.

J. **State Implementation Policy.** On March 2, 2000, the State Water Board adopted the *Policy for Implementation of Toxics Standards for Inland Surface Waters, Enclosed Bays, and Estuaries of California* (State Implementation Policy or SIP). The SIP became effective on April 28, 2000, with respect to the priority pollutant criteria promulgated for California by the USEPA through the NTR and to the priority pollutant objectives established by the Regional Water Board in the Basin Plan. The SIP became effective on May 18, 2000, with respect to the priority pollutant criteria promulgated by the USEPA through the CTR. The State Water Board adopted amendments to the SIP on February 24, 2005, that became effective on July 13, 2005. The SIP establishes implementation provisions for priority pollutant criteria and objectives and provisions for chronic toxicity control. Requirements of this Order implement the SIP.

K. **Compliance Schedules and Interim Requirements.** Section 2.1 of the SIP provides that, based on an existing discharger's request and demonstration that it is infeasible for it to achieve immediate compliance with an effluent limitation derived from a CTR criterion, a compliance schedule may be allowed in an NPDES permit. Unless an exception has been granted under section 5.3 of the SIP, a compliance schedule may not exceed 5 years from the date that the permit is issued or reissued, nor may it extend beyond 10 years from the effective date of the SIP (or May 18, 2010) to establish and comply with CTR criterion-based effluent limitations. Where a compliance schedule for a final effluent limitation exceeds 1 year, the Order must include interim numeric limitations for that constituent or parameter.

The State Water Board adopted Resolution No. 2008-0025 on April 15, 2008, titled "Policy for Compliance Schedules in National Pollutant Discharge Elimination System Permits" which includes compliance schedule policies for pollutants that are not addressed by the SIP. This policy has been approved by USEPA and OAL, and became effective on August 27, 2008, superceding the Basin Plan's compliance schedule policy. Consistent with the State Water Board's new policy, this Order includes a compliance schedule and discharge specifications for dioxin-TEQ. A detailed discussion of the basis for the compliance schedule and discharge specifications is included in the Fact Sheet.

L. Alaska Rule. On March 30, 2000, USEPA revised its regulation that specifies when new and revised state and tribal water quality standards become effective for CWA purposes. [65 Fed. Reg. 24641 (April 27, 2000) (codified at 40 CFR 131.21)]. Under the revised regulation (also known as the Alaska Rule), new and revised standards submitted to USEPA after May 30, 2000, must be approved by USEPA before being used for CWA purposes. The final rule also provides that standards already in effect and submitted to USEPA by May 30, 2000, may be used for CWA purposes, whether or not approved by USEPA.

M. Stringency of Requirements for Individual Pollutants. This Order contains both technology-based and Water Quality Based Effluent Limitations (WQBELs) for individual pollutants. The technology-based effluent limitations consist of restrictions on biological oxygen demand (BOD), total suspended solids (TSS), pH, and oil and grease. Derivation of these technology-based limitations is discussed in the Fact Sheet (Attachment F). This Order's technology-based pollutant restrictions implement the minimum applicable federal technology-based requirements. In addition, this Order contains effluent limitations more stringent than the minimum federal technology-based requirements as necessary to meet water quality standards.

WQBELs have been derived to implement water quality objectives that protect beneficial uses. Both the beneficial uses and the water quality objectives have been approved pursuant to federal law and are the applicable federal water quality standards. To the extent that toxic pollutant WQBELs were derived from the CTR, the CTR is the applicable standard pursuant to 40 CFR 131.38. The procedures for calculating the individual water quality-based effluent limitations for priority pollutants are based on the SIP, which was approved by USEPA on May 18, 2000. All beneficial uses and water quality objectives contained in the Basin Plan were approved under State law and submitted to USEPA prior to May 30, 2000. Any water quality objectives and beneficial uses submitted to USEPA prior to May 30, 2000, but not approved by USEPA before that date, are nonetheless "applicable water quality standards for the purposes of the CWA" pursuant to 40 CFR 131.21(c)(1). Collectively, this Order's restrictions on individual pollutants are no more stringent than required to implement the requirements of the CWA.

N. Antidegradation Policy. NPDES regulations at 40 CFR 131.12 require that the State water quality standards include an antidegradation policy consistent with the federal policy. The State Water Board established California's antidegradation policy in State Water Board Resolution No. 68-16. Resolution No. 68-16 incorporates the federal antidegradation policy where the federal policy applies under federal law and requires that existing water quality be maintained unless degradation is justified based on specific findings. The Basin Plan implements, and incorporates by reference, both the State and federal antidegradation policies.

O. Anti-Backsliding Requirements. CWA Sections 402(o)(2) and 303(d)(4) and NPDES regulations at 40 CFR 122.44(l) prohibit backsliding in NPDES permits. These anti-backsliding provisions require effluent limitations in a reissued permit to be as stringent as those in the previous permit, with some exceptions where limitations may be relaxed. As discussed in the Fact Sheet (**Attachment F**), anti-backsliding requirements are satisfied where effluent limitations in this Order are less stringent than those in the previous permit (Order No. R2-2003-0114.)

P. Flow Increases. The Discharger has proposed flow increases at the Plant to accommodate future growth and increased demands for recycled water. The Discharger plans to complete modifications to the Plant by 2013 to increase its capacity. Provision VI.C.9 of this Order requires the Discharger to complete the modifications and verify the increased treatment capacity. CEQA requirements for the flow increase were completed in 1988. The Discharger submitted a report titled "Anti-Degradation Analysis for Proposed Wastewater Treatment Plant Discharge Modification" in December 2008. As discussed in the Fact Sheet (**Attachment F**), the Regional Water Board finds that the increase in permitted capacity will produce minor effects that will not result in a significant reduction of water quality, and that the permitted discharge is consistent with the antidegradation provision of 40 CFR §131.12 and State Water Board Resolution 68-16.

Q. Endangered Species Act. This Order does not authorize any act that results in the taking of a threatened or endangered species or any act that is now prohibited, or becomes prohibited in the future, under either the California Endangered Species Act (Fish and Game Code sections 2050 to 2097) or the federal Endangered Species Act (16 U.S.C.A. sections 1531 to 1544). This Order requires compliance with effluent limits, receiving water limits, and other requirements to protect the beneficial uses of waters of the State. The Discharger is responsible for meeting all requirements of applicable State and federal law pertaining to threatened and endangered species.

R. Monitoring and Reporting. NPDES regulations at 40 CFR 122.48 require that all NPDES permits specify requirements for recording and reporting monitoring results. CWC sections 13267 and 13383 authorize the Regional Water Board to require technical and monitoring reports. The Monitoring and Reporting Program establishes monitoring and reporting requirements to implement federal and State requirements. This Monitoring and Reporting Program is provided in Attachment E.

S. Standard and Special Provisions. Standard Provisions, which apply to all NPDES permits in accordance with 40 CFR 122.41, and additional conditions applicable to specified categories of permits in accordance with 40 CFR 122.42, are provided in Attachment D. The Discharger must comply with all standard provisions and with those additional conditions that are applicable under 40 CFR 122.42. The Regional Water Board has also included in this Order special provisions applicable to the Discharger. A rationale for the special provisions contained in this Order is provided in the attached Fact Sheet.

T. Provisions and Requirements Implementing State Law. The provisions/requirements in subsections IV.B, IV.C, and V.B of this Order are included to implement State law only. These provisions/requirements are not required or authorized under the federal CWA, and consequently, violations of these provisions/requirements are not subject to the enforcement remedies that are available for NPDES violations.

U. Notification of Interested Parties. The Regional Water Board has notified the Discharger and interested agencies and persons of its intent to prescribe Waste Discharge Requirements for the discharge and has provided them with an opportunity to submit their written comments and recommendations. Details of notification are provided in the Fact Sheet (Attachment F.)

V. Consideration of Public Comment. The Regional Water Board, in a public meeting, heard and considered all comments pertaining to the discharge. Details of the Public Hearing are provided in the Fact Sheet.

IT IS HEREBY ORDERED that this Order supersedes Orders No. R2-2003-0114 and R2-2004-0027 except for enforcement purposes, and, in order to meet the provisions contained in Division 7 of the California Water Code (commencing with section 13000) and regulations adopted thereunder, and the provisions of the federal Clean Water Act (CWA) and regulations and guidelines adopted thereunder, the Discharger shall comply with the requirements in this Order.

III. DISCHARGE PROHIBITIONS

A. Discharge of treated wastewater at a location or in a manner different from that described in this Order is prohibited.

B. Discharge at any point at which the treated wastewater does not receive an initial dilution of at least 61:1 is prohibited.

C. The bypass of untreated or partially treated wastewater to waters of the United States is prohibited, except as provided for in the conditions stated in Subsections I.G.2 and I.G.4 of Attachment D of this Order. Routing flows to either the trickling towers or the aeration basins, but not both, is not considered bypass and is not a violation of this Order because the Discharger has dual biological treatment processes.

D. The average dry weather flow, measured at Monitoring Locations EFF-001, as described in the attached Monitoring and Reporting Plan (MRP) (Attachment E), shall not exceed 16.5 MGD. This limit may be increased to 22.7 MGD upon compliance with the tasks described in Provision VI.C.9. The average dry weather flow shall be determined for compliance with this prohibition over three consecutive dry weather months each year.

E. Any sanitary sewer overflow that results in a discharge of untreated or partially treated wastewater to waters of the United States is prohibited.

IV. EFFLUENT LIMITATIONS AND DISCHARGE SPECIFICATIONS

A. Effluent Limitations – Discharge Point 001

1. Effluent Limitations for Conventional and Non-Conventional Pollutants

a. The Discharger shall maintain compliance with the following effluent limitations for Discharge Point 001, with compliance measured at Monitoring Location EFF-001 for bacteria limits and at EFF-002 for all other effluent limits, as described in the attached MRP (Attachment E).

Table 6. Effluent Limitations for Conventional and Non-conventional Pollutants

Parameter	Units	Effluent Limitations				
		Average Monthly	Average Weekly	Maximum Daily	Instantaneous Minimum	Instantaneous Maximum
Biochemical Oxygen Demand (BOD_5)	mg/L	30	45	---	---	---
Total Suspended Solids (TSS)	mg/L	30	45	---	---	---
Oil and Grease	mg/L	10	---	20	---	---
pH [1]	s.u.	---	---	---	6.0	9.0
Chlorine, Total Residual	mg/L	---	---	---	---	0.0 [2]

Footnotes to Table 6:

[1] If the Discharger monitors pH continuously, pursuant to 40 CFR 401.17, the Discharger shall be in compliance with the pH limitation specified herein, provided that both of the following conditions are satisfied: (i) the total time during which the pH values are outside the required range of pH values shall not exceed 7 hours and 26 minutes in any calendar month; and (ii) no individual excursion from the range of pH values shall exceed 60 minutes.

[2] This requirement is defined as below the limit of detection in standard test methods as defined in the latest edition of *Standard Methods for the Examination of Water and Wastewater*. The Discharger may elect to use a continuous in-line monitoring system(s) for measuring flows, sodium hypochlorite, and sodium bisulfite dosage (including a safety factor) and concentration to prove that chlorine residual exceedances are false positives. If convincing evidence is provided, Regional Water Board staff will conclude that these chlorine residual exceedances are false positives and are not violations of the Order's Total Residual Chlorine limit.

b. **BOD_5 and TSS 85 Percent Removal:** The concentration-based average monthly percent removal of BOD_5 and TSS shall not be less than 85 percent.

c. **Enterococcus Bacteria:** The treated wastewater at EFF-001 shall meet the following limits of bacteriological quality:

The 30-day geometric mean value for all samples analyzed for enterococcus bacteria shall not exceed 33 colonies per 100 mL.

2. Effluent Limitations for Toxic Pollutants

a. The Discharger shall maintain compliance with the following effluent limitations at Discharge Point 001, with compliance measured at Monitoring Location EFF-002, as described in the attached MRP (Attachment E).

Table 7. Effluent Limitations for Toxic Pollutants

Parameter		Final Effluent Limitations [1,2]	
		Average Monthly	Maximum Daily
Copper	µg/L	38	53
Selenium	µg/L	4.1	8.2
Cyanide	µg/L	18	45
Dioxin-TEQ [3]	µg/L	1.4×10^{-8}	3.9×10^{-8}
Bromoform	µg/L	39	77
Chlorodibromomethane	µg/L	3.6	7.1
Methylene Chloride	µg/L	43	85
Bis(2-ethylhexyl)phthalate	µg/L	12	24
Ammonia, Total	mg/L as N	210	260

Footnotes to Table 7:

Units:

µg/L = micrograms per liter
mg/L = milligrams per liter
pg/L = picograms per liter

[1] a. Limitations for toxic pollutants apply to the average concentration of all samples collected during the averaging period (daily = 24-hour period; monthly = calendar month).

b. All metals limitations are expressed as total recoverable metal.

[2] A daily maximum or average monthly value for a given constituent shall be considered noncompliant with the effluent limitations only if it exceeds the effluent limitation and the Reporting Level for that constituent. As outlined in Section 2.4.5 of the SIP, Table 8, below, indicates the Minimum Level (ML) for compliance determination purposes. An ML is the concentration at which the entire analytical system must give a recognizable signal and acceptable calibration point. The ML is the concentration in a sample that is equivalent to the concentration of the lowest calibration standard analyzed by a specific analytical procedure, assuming that all the method specified sample weights, volumes, and processing steps have been followed.

[3] Final effluent limitations shall become effective on August 1, 2014. The Regional Water Board may amend these final effluent limitations prior to this date in accordance with TMDLs that become effective subsequent to the effective date of this Order.

Table 8. Minimum Levels for Pollutants with Effluent Limitations

Parameter	Minimum Level	Units
Copper	0.5	µg/L
Selenium	1	µg/L
Cyanide	5	µg/L
Bromoform	0.5	µg/L
Chlorodibromomethane	0.5	µg/L
Methylene Chloride	0.5	µg/L
Bis(2-ethylhexyl)phthalate	5	µg/L
Ammonia	0.2	mg/L
Dioxin-TEQ	As specified below	
2,3,7,8-TCDD	5	pg/L
1,2,3,7,8-PeCDD	25	pg/L
1,2,3,4,7,8-HxCDD	25	pg/L
1,2,3,6,7,8-HxCDD	25	pg/L
1,2,3,7,8,9-HxCDD	25	pg/L
1,2,3,4,6,7,8-HpCDD	25	pg/L
OCDD	50	pg/L
2,3,7,8-TCDF	5	pg/L

Parameter	Minimum Level	Units
1,2,3,7,8-PeCDF	25	pg/L
2,3,4,7,8-PeCDF	25	pg/L
1,2,3,4,7,8-HxCDF	25	pg/L
1,2,3,6,7,8-HxCDF	25	pg/L
1,2,3,7,8,9-HxCDF	25	pg/L
2,3,4,6,7,8-HxCDF	25	pg/L
1,2,3,4,6,7,8-HpCDF	25	pg/L
1,2,3,4,7,8,9-HpCDF	25	pg/L
OCDF	50	pg/L
Total Ammonia	0.2	mg/L as N

3. Interim Effluent Limitations – Discharge Point 001

a. The Discharger shall maintain compliance with the following interim effluent limitation at Discharge Point 001, with compliance measured at Monitoring Location EFF-002, as described in the attached MRP (Attachment E). Final effluent limitations shall become effective on August 1, 2014.

Table 9. Interim Effluent Limitation for Dioxin-TEQ

Parameter	Units	Interim Effluent Limitations	
		AMEL	MDEL
Dioxin-TEQ	µg/L	---	1.3×10^{-7}

4. Acute Toxicity:

a. Representative samples of the effluent at Monitoring Location EFF-002 shall meet the following limits for acute toxicity. Bioassays shall be conducted in compliance with Section V.A of the MRP (Attachment E).

The survival of organisms in undiluted combined effluent shall be:

- an eleven (11) sample median value of not less than 90 percent survival, and
- an eleven (11) sample 90 percentile value of not less than 70 percent survival.

b. These acute toxicity limitations are further defined as follows:

11 sample median: A bioassay test showing survival of less than 90 percent represents a violation of this effluent limit, if five or more of the past ten or less bioassay tests show less than 90 percent survival.

90th percentile: A bioassay test showing survival of less than 70 percent represents a violation of this effluent limit, if one or more of the past ten or less bioassay tests show less than 70 percent survival.

c. Bioassays shall be performed using the most up-to-date USEPA protocol and the most sensitive species based on the most recent screening test results. Bioassays shall be

conducted in compliance with *Methods for Measuring the Acute Toxicity of Effluents and Receiving Water to Freshwater and Marine Organisms,* currently 5th Edition (EPA-821-R-02-012).

d. If the Discharger can demonstrate to the satisfaction of the Executive Officer that toxicity exceeding the levels cited above is caused by ammonia and that the ammonia in the discharge is in compliance with effluent limits, then such toxicity does not constitute a violation of this effluent limitation.

5. Chronic Toxicity

a. Compliance with the Basin Plan narrative chronic toxicity objective shall be demonstrated according to the following tiered requirements based on results from representative samples of the treated final effluent at Monitoring Location EFF-002, which meet test acceptability criteria, and follow requirements of Section V.B of the MRP (Attachment E). Failure to conduct the required toxicity tests or a TRE within a designated period shall result in the establishment of effluent limitations for chronic toxicity.

(1) Conduct routine monitoring.

(2) Accelerate monitoring after exceeding a three sample median of 10 chronic toxicity units (TUc) or single-sample maximum of 20 TUc, consistent with Table 4-5 of the Basin Plan for deep-water dischargers. Accelerated monitoring shall consist of monthly monitoring.

(3) Return to routine monitoring if accelerated monitoring does not exceed the “trigger” in (2), above.

(4) If accelerated monitoring confirms consistent toxicity above the “trigger” in (2), above, initiate toxicity identification evaluation/toxicity reduction evaluation (TIE/TRE) in accordance with a workplan submitted in accordance with Section V.B.3 of the MRP (Attachment E) that incorporates any and all comments from the Executive Officer.

(5) Return to routine monitoring after appropriate elements of the TRE workplan are implemented and either the toxicity drops below the “trigger” level in (2), above, or, based on the results of the TRE, the Executive Officer authorizes a return to routine monitoring.

b. Test Species and Methods

The Discharger shall conduct routine monitoring with the test species and protocols specified in Section V.B of the MRP (Attachment E). The Discharger shall also perform Chronic Toxicity Screening Phase monitoring as described in the Appendix E-1 of the MRP (Attachment E). Chronic Toxicity Monitoring Screening Phase Requirements, Critical Life Stage Toxicity Tests and definitions of terms used in the chronic toxicity monitoring are identified in Appendices E-1 and E-2 of the MRP (Attachment E).

B. Land Discharge Specifications

Not Applicable.

C. Reclamation Specifications

Not Applicable.

V. RECEIVING WATER LIMITATIONS

A. Surface Water Limitations

1. Receiving water limitations are based on water quality objectives contained in the Basin Plan and are a required part of this Order. The discharges shall not cause the following in New York Slough:

   a. Floating, suspended, or deposited macroscopic particulate matter or foams;

   b. Bottom deposits or aquatic growths to the extent that such deposits or growths cause nuisance or adversely affect beneficial uses;

   c. Alteration of temperature, turbidity, or apparent color beyond present natural background levels;

   d. Visible, floating, suspended, or deposited oil and other products of petroleum origin; or

   e. Toxic or other deleterious substances to be present in concentrations or quantities that will cause deleterious effects on wildlife, waterfowl, or other aquatic biota, or that render any of these unfit for human consumption, either at levels created in the receiving waters or as a result of biological concentration.

2. The discharge of waste shall not cause the following limits to be exceeded in waters of the State within one foot of the water surface:

   a. Dissolved Oxygen 7.0 mg/L, minimum

      The median dissolved oxygen concentration for any three consecutive months shall not be less than 80% of the dissolved oxygen content at saturation. When natural factors cause concentrations less than that specified above, the discharge shall not cause further reduction in ambient dissolved oxygen concentrations.

   b. Dissolved Sulfide Natural background levels

   c. pH Within the range from 6.5 to 8.5

3. The discharge shall not cause a violation of any particular water quality standard for receiving waters adopted by the Regional or State Water Boards as required by the CWA and regulations adopted thereunder. If more stringent applicable water quality standards are promulgated or approved pursuant to Section 303 of the CWA, or amendments thereto, the

Regional Water Board will revise and modify this Order in accordance with such more stringent standards.

B. Groundwater Limitations

Not Applicable.

VI. PROVISIONS

A. Standard Provisions

1. The Discharger shall comply with Federal Standard Provisions included in Attachment D of this Order.

2. The Discharger shall comply with all applicable items of the Standard Provisions and Reporting Requirements for NPDES Surface Water Discharge Permits, August 1993 (Standard Provisions, Attachment G), except for Section A.13. Where provisions or reporting requirements specified in this Order and Attachment G are different from equivalent or related provisions or reporting requirements given in the Standard Provisions in Attachment D, the specifications of this Order and/or Attachment G shall apply in areas where those provisions are more stringent. Duplicative requirements in the federal Standard Provisions in VI.A.1, above (Attachment D), and the regional Standard Provisions (Attachment G) are not separate requirements. A violation of a duplicative requirement does not constitute two separate violations.

B. Monitoring and Reporting Program (MRP) Requirements

The Discharger shall comply with the MRP (Attachment E) and future revisions thereto. The Discharger shall also comply with the requirements contained in *Self Monitoring Programs, Part A*, August 1993 (Attachment G).

C. Special Provisions

1. Reopener Provisions

The Regional Water Board may modify or reopen this Order prior to its expiration date in any of the following circumstances as allowed by law:

a. If present or future investigations demonstrate that the discharges governed by this Order will have, or will cease to have, a reasonable potential to cause or contribute to adverse impacts on water quality and/or beneficial uses of the receiving waters.

b. If new or revised WQOs or Total Maximum Daily Loads (TMDLs) come into effect for the San Francisco Bay estuary and contiguous water bodies (whether statewide, regional, or site-specific). In such cases, effluent limitations in this Order will be modified as necessary to reflect updated WQOs and waste load allocations in TMDLs. Adoption of effluent limitations contained in this Order is not intended to restrict in any way future modifications based on legally adopted WQOs, TMDLs, or as otherwise permitted under Federal regulations governing NPDES permit modifications.

c. If translator or other water quality studies provide a basis for determining that a permit condition(s) should be modified.

d. If an administrative or judicial decision on a separate NPDES permit or WDR addresses requirements similar to this discharge.

e. Or as otherwise authorized by law.

The Discharger may request permit modification based on the above. The Discharger shall include in any such request an antidegradation and antibacksliding analysis.

2. Special Studies, Technical Reports and Additional Monitoring Requirements

a. Effluent Characterization for Selected Constituents

The Discharger shall continue to monitor and evaluate the discharge from Discharge Point 001 (measured at EFF-002) for the constituents listed in Enclosure A of the Regional Water Board's August 6, 2001, Letter entitled, *Requirement for Monitoring of Pollutants in Effluent and Receiving Water to Implement New Statewide Regulations and Policy* (Attachment G), according to the sampling frequency specified in the attached MRP (Attachment E). Compliance with this requirement shall be achieved in accordance with the specifications stated in the Regional Water Board's August 6, 2001, Letter under Effluent Monitoring for Major Dischargers.

The Discharger shall evaluate on an annual basis if concentrations of any constituent increase over past performance. The Discharger shall investigate the cause of the increase. The investigation may include, but need not be limited to, an increase in the effluent monitoring frequency, monitoring of internal process streams, and monitoring of influent sources. This requirement may be satisfied through identification of these constituents as "pollutants of concern" in the Discharger's Pollutant Minimization Program described in Provision VI.C.3, below. A summary of the annual evaluation of data and source investigation activities shall also be reported in the annual self-monitoring report.

A final report that presents all the data shall be submitted to the Regional Water Board no later than 180 days prior to the Order expiration date. This final report shall be submitted with the application for permit reissuance.

b. Ambient Background Receiving Water Study

The Discharger shall collect or participate in collecting background ambient receiving water monitoring data for priority pollutants for which the Regional Water Board is required to perform reasonable potential analyses and calculate effluent limitations. The data on the conventional water quality parameters (pH, salinity, and hardness) shall be sufficient to characterize these parameters in the receiving water at a point after the discharge has mixed with the receiving waters. This provision may be met through monitoring through a collaborative Bay Area Clean Water Agencies (BACWA) study or a similar ambient monitoring program for San Francisco Bay. This Order may be

reopened, as appropriate, to incorporate effluent limits or other requirements based on Regional Water Board review of these data.

The Discharger shall submit, or cause to have submitted on its behalf, a final report that presents all this data to the Regional Water Board 180 days prior to Order expiration, or cause one to be submitted on its behalf. This final report shall be submitted prior to or with the application for permit reissuance.

3. Best Management Practices and Pollution Minimization

a. Pollutant Minimization Program

The Discharger shall continue to improve, in a manner acceptable to the Executive Officer, its existing Pollutant Minimization Program to promote minimization of pollutant loadings to the Plant and therefore to the receiving waters.

b. Annual Pollution Prevention Report

The Discharger shall submit an annual report, acceptable to the Executive Officer, no later than February 28th of each calendar year. The annual report shall cover January through December of the preceding year. Each annual report shall include at least the following information:

(1) *A brief description of its treatment plant, treatment plant processes and service area.*

(2) *A discussion of the current pollutants of concern.* Periodically, the Discharger shall determine which pollutants are currently a problem and/or which pollutants may be potential future problems. This discussion shall include the reasons why the pollutants were chosen.

(3) *Identification of sources for the pollutants of concern.* This discussion shall include how the Discharger intends to estimate and identify pollutant sources. The Discharger should also identify sources or potential sources not directly within the ability or authority of the Discharger to control, such as pollutants in the potable water supply and air deposition.

(4) *Identification of tasks to reduce the sources of the pollutants of concern.* This discussion shall identify and prioritize tasks to address the Discharger's pollutants of concern. The Discharger may implement the tasks themselves or participate in group, regional, or national tasks that will address its pollutants of concern whenever it is efficient and appropriate to do so. A time line shall be included for the implementation of each task.

(5) *Outreach to employees.* The Discharger shall inform its employees about the pollutants of concern, potential sources, and how they might be able to help reduce the discharge of these pollutants. The Discharger may provide a forum for employees to provide input to the program.

(6) *Continuation of Public Outreach Program.* The Discharger shall prepare a public outreach program to communicate pollution minimization measures to its service area. Outreach may include participation in existing community events such as county fairs, initiating new community events such as displays and contests during Pollution Prevention Week, conducting school outreach programs, conducting Plant tours, and providing public information in various media. Information shall be specific to target audiences. The Discharger shall coordinate with other agencies as appropriate.

(7) *Discussion of criteria used to measure PMP's and tasks' effectiveness.* The Discharger shall establish criteria to evaluate the effectiveness of its PMP. This discussion shall address the specific criteria used to measure the effectiveness of each of the tasks in Provision VI.C.3.b.(3-6), above.

(8) *Documentation of efforts and progress.* This discussion shall detail all of the Discharger's activities in the Pollutant Minimization Program during the reporting year.

(9) *Evaluation of Program's and tasks' effectiveness.* The Discharger shall use the criteria established in b.(7), above, to evaluate the Pollutant Minimization Program's and tasks' effectiveness.

(10) *Identification of specific tasks and time schedules for future efforts.* Based on the evaluation of effectiveness, the Discharger shall describe how it will continue or change its PMP tasks to more effectively reduce the loadings of pollutant to the treatment plant, and subsequently to receiving waters.

c. Pollutant Minimization Program for Reportable Priority Pollutants

The Discharger shall develop and conduct a PMP as further described below when there is evidence (e.g., sample results reported as Detected but Not Quantified [DNQ] when the effluent limitation is less than the method detection limit [MDL]), sample results from analytical methods more sensitive than those methods required by this Order, presence of whole effluent toxicity, health advisories for fish consumption, results of benthic or aquatic organism tissue sampling) that a priority pollutant is present in the effluent above an effluent limitation and either:

(1) A sample result is reported as DNQ and the effluent limitation is less than the Reporting Limit (RL); or

(2) A sample result is reported as Not Detected (ND) and the effluent limitation is less than the MDL, using definitions described in the SIP.

d. If triggered by the reasons in c. above, the Discharger's PMP shall include, but not be limited to, the following actions and submittals acceptable to the Regional Water Board:

(1) An annual review and semi-annual monitoring of potential sources of the reportable priority pollutant(s), which may include fish tissue monitoring and other bio-uptake sampling, or alternative measures approved by the Executive Officer when it is demonstrated that source monitoring is unlikely to produce useful analytical data;

(2) Quarterly monitoring for the reportable priority pollutant(s) in the influent to the wastewater treatment system, or alternative measures approved by the Executive Officer when it is demonstrated that influent monitoring is unlikely to produce useful analytical data;

(3) Submittal of a control strategy designed to proceed toward the goal of maintaining concentrations of the reportable priority pollutant(s) in the effluent at or below the effluent limitation;

(4) Implementation of appropriate cost-effective control measures for the reportable priority pollutant(s), consistent with the control strategy; and

(5) The annual report required by 3.b. above, shall specifically address the following items:

i. All PMP monitoring results for the previous year;

ii. A list of potential sources of the reportable priority pollutant(s);

iii. A summary of all actions undertaken pursuant to the control strategy; and

iv. A description of actions to be taken in the following year.

4. Construction, Operation, and Maintenance Specifications

a. Wastewater Facilities Review and Evaluation and Status Reports

(1) The Discharger shall operate and maintain its wastewater collection, treatment, and disposal facilities in a manner to ensure that all facilities are adequately staffed, supervised, financed, operated, maintained, repaired, and upgraded as necessary, in order to provide adequate and reliable transport, treatment, and disposal of all wastewater from both existing and planned future wastewater sources under the Discharger's service responsibilities.

(2) The Discharger shall regularly review and evaluate its wastewater facilities and operation practices in accordance with (1) above. Reviews and evaluations shall be conducted as an ongoing component of the Discharger's administration of its wastewater facilities.

(3) The Discharger shall provide the Executive Officer, upon request, a report describing the current status of its wastewater facilities and operation practices, including any recommended or planned actions and an estimated time schedule for these actions. The Discharger shall also include, in each annual Self-Monitoring Report, a description or summary of review and evaluation procedures, and applicable wastewater facility programs or capital improvement projects.

b. Operations and Maintenance (O&M) Manual, Review and Status Reports

(1) The Discharger shall maintain an O&M manual for its wastewater facilities. The O&M Manual shall be maintained in usable condition and be available for reference and use by all applicable personnel.

(2) The Discharger shall regularly review, revise, or update, as necessary, the O&M Manual(s) to ensure that the document(s) may remain useful and relevant to current equipment and operation practices. Reviews shall be conducted annually, and revisions or updates shall be completed as necessary. Applicable revisions of the O&M manual shall be completed within 90 days of any significant changes being made in Plant equipment or operation practices.

(3) The Discharger shall provide the Executive Officer, upon request, a report describing the current status of its O&M manual, including any recommended or planned actions and an estimated time schedule for these actions, upon request. The Discharger shall also include a description or summary of review and evaluation procedures and applicable changes to its O&M manual in each Annual Self-Monitoring Report.

c. Contingency Plan, Review and Status Reports

(1) The Discharger shall maintain a Contingency Plan as required by Regional Water Board Resolution 74-10 (Attachment G) and as prudent in accordance with current municipal facility emergency planning. The discharge of pollutants in violation of this Order where the Discharger has failed to develop and/or adequately implement a Contingency Plan will be the basis for considering such discharge a willful and negligent violation of this Order pursuant to Section 13387 of the CWC.

(2) The Discharger shall regularly review the Contingency Plan so that the plan may remain useful and relevant to current equipment and operation practices. Reviews shall be conducted annually, and updates shall be completed as necessary.

(3) The Discharger shall provide the Executive Officer, upon request, a report describing the current status of its review and update of the Contingency Plan upon request. The Discharger shall also include a description or summary of review and evaluation procedures and applicable changes to its Contingency Plan in each Annual Self-Monitoring Report.

5. Special Provisions for POTWs

a. Pretreatment Program

(1) The Discharger shall implement and enforce its approved pretreatment program in accordance with federal Pretreatment Regulations (40 CFR 403), pretreatment standards promulgated under Sections 307(b), 307(c), and 307(d) of the CWA, pretreatment requirements specified under 40 CFR 122.44(j), and the requirements in Attachment H, "Pretreatment Requirements." The Discharger's responsibilities include, but are not limited to:

i. Enforcement of National Pretreatment Standards of 40 CFR 403.5 and 403.6;

ii. Implementation of its pretreatment program in accordance with legal authorities, policies, procedures, and financial provisions described in the General Pretreatment regulations (40 CFR 403) and its approved pretreatment program;

iii. Submission of reports to USEPA, the State Water Board, and the Regional Water Board, as described in Attachment H "Pretreatment Requirements."

iv. Evaluate the need to revise local limits under 40 CFR 403.5(c)(1); and within 180 days after the effective date of this Order, submit a report describing the changes with a plan and schedule for implementation. To ensure no significant increase in the discharge of copper, and thus compliance with antidegradation requirements, the Discharger shall not consider eliminating or relaxing local limits for copper in this evaluation.

(2) The Discharger shall implement its approved pretreatment program and the program shall be an enforceable condition of this Order. If the Discharger fails to perform the pretreatment functions, the Regional Water Board, the State Water Board, or the USEPA may take enforcement actions against the Discharger as authorized by the Clean Water Act.

b. Biosolids Management Practices Requirements

(1) All biosolids generated by the Discharger must be disposed of in a municipal solid waste landfill, used as part of a waste-to-energy facility, reused by land application, composted, or disposed of in a sludge-only landfill in accordance with 40 CFR 503. If the Discharger desires to dispose of biosolids by a different method, a request for permit modification must be submitted to USEPA 180 days before start-up of the alternative disposal practice. All the requirements in 40 CFR 503 are enforceable by USEPA whether or not they are stated in an NPDES permit or other permit issued to the Discharger. The Regional Water Board should be copied on relevant correspondence and reports forwarded to USEPA regarding sludge management practices.

(2) Biosolids treatment, storage and disposal or reuse shall not create a nuisance, such as objectionable odors or flies, or result in groundwater contamination.

(3) The Discharger shall take all reasonable steps to prevent or minimize any biosolids use or disposal which has a likelihood of adversely affecting human health or the environment.

(4) The discharge of biosolids shall not cause waste material to be in a position where it is or can be carried from the biosolids treatment and storage site and deposited in waters of the State.

(5) The biosolids treatment and storage site shall have facilities adequate to divert surface runoff from adjacent areas, to protect boundaries of the site from erosion, and to prevent any conditions that would cause drainage from the materials in the temporary

storage site. Adequate protection is defined as protection from at least a 100-year storm and protection from the highest possible tidal stage that may occur.

(6) For biosolids that are applied to the land, placed on a surface disposal site, or fired in a biosolids incinerator as defined in 40 CFR 503, the Discharger shall submit an annual report to USEPA and the Regional Water Board containing monitoring results and pathogen and vector attraction reduction requirements as specified by 40 CFR 503, postmarked February 15 of each year, for the period covering the previous calendar year.

(7) Biosolids that are disposed of in a municipal solid waste landfill must meet the requirements of 40 CFR 258. In the annual Self-Monitoring Report, the Discharger shall include the amount of biosolids disposed of and the landfill(s) to which it was sent.

(8) Permanent on-site biosolids storage or disposal activities are not authorized by this Order. A report of Waste Discharge shall be filed and the site brought into compliance with all applicable regulations prior to commencement of any such activity by the Discharger.

(9) Biosolids Monitoring and Reporting Provisions of this Regional Water Board's Standard Provisions (Attachment G), apply to sludge handling, disposal and reporting practices.

(10) The Regional Water Board may amend this Order prior to expiration if changes occur in applicable state and federal sludge regulations.

c. Sanitary Sewer Overflows and Sewer System Management Plan

The Discharger's collection system is part of the facility that is subject to this Order. As such, the Discharger must properly operate and maintain its collection system (Attachment D, Standard Provisions - Permit Compliance, subsection I.D). The Discharger must report any noncompliance (Attachment D, Standard Provision - Reporting, subsections V.E.1 and V.E.2), and mitigate any discharge from the Discharger's collection system in violation of this Order (Attachment D, Standard Provisions - Permit Compliance, subsection I.C). The General Waste Discharge Requirements for Sanitary Sewer Systems (General WDRs for Wastewater Collection Agencies, State Water Board Order No. 2006-0003 DWQ) includes requirements for operation and maintenance of collection systems and for reporting and mitigating sanitary sewer overflows. While the Discharger must comply with both the General WDRs for Wastewater Collection Agencies and this Order, the General WDRs for Wastewater Collection Agencies more clearly and specifically stipulate requirements for operation and maintenance and for reporting and mitigating sanitary sewer overflows.

Implementation of the requirements of the General WDRs for Wastewater Collection Agencies for proper operation and maintenance and mitigation of spills will satisfy the corresponding federal NPDES requirements specified in this Order. Following reporting requirements in the General WDRs for Wastewater Collection Agencies will satisfy NPDES reporting requirements for sewage spills. Furthermore, the Discharger shall

comply with the schedule for development of sewer system management plans as indicated in the letter issued by the Regional Water Board on July 7, 2005, pursuant to CWC Section 13267; and with the sanitary sewer overflow and unauthorized discharge notification and reporting requirements of the letter issued by the Regional Water Board on May 1, 2008, pursuant to CWC Section 13267; and with the sanitary sewer overflow and unauthorized discharge notification and reporting requirements of the letter issued by the Regional Water Board on May 1, 2008, pursuant to CWC section 13267. The Discharger shall report sanitary sewer overflows electronically using the State Water Board's on-line reporting system.

6. Compliance Schedule

a. Dioxin-TEQ. The Discharger shall adhere to the following schedule to comply with final effluent limitations established by this Order for dioxin-TEQ.

Table 10. Dioxin-TEQ Compliance Schedule

Task	Deadline
1. Implement existing source control measures to reduce concentrations of dioxin-TEQ to the Plant, and therefore to receiving waters.	Upon the effective date of this Order.
2. Evaluate and report on the effectiveness of source control measures in reducing concentrations of dioxin-TEQ to the Plant. If previous measures have not been successful in enabling the Discharger to comply with final limits for dioxin-TEQ, the Discharger shall also identify and implement additional source control measures to further reduce concentrations of these pollutants.	Annually by February 28 with the Annual Pollution Prevention Report required by Section VI.C.3.b, above.
3. In the event that source control measures are insufficient for meeting the final water quality based effluent limit specified in Effluent Limitations and Discharge Specifications A.2 for dioxin-TEQ, submit a schedule for implementation of additional actions to reduce the concentrations of these pollutants.	No later than 12 months after a detection of dioxin-TEQ that is out of compliance with the final effluent limits.
4. Commence implementation of the identified additional actions in accordance with the schedule submitted in task 3, above.	Annually by February 28 with the Annual Pollution Prevention Report required by Section VI.C.3.b, above.
5. Comply with final effluent limitations for dioxin-TEQ. (see Effluent Limitation IV.A.3)	August 1, 2014

7. Copper Action Plan

The Discharger shall implement pretreatment, source control, and pollution prevention for copper in accordance with the following tasks and time schedule.

Table 11. Copper Action Plan

Task	Deadline
1. Review Potential Copper Sources The Discharger shall submit an inventory of potential copper sources to the treatment plant.	July 1, 2009
2. Implement Copper Control Program The Discharger shall submit a plan for and begin implementation of a program to reduce copper discharges identified in Task 1. For publicly owned treatment works, the plan shall consist, at a minimum, of the following elements: a. Provide education and outreach to the public (e.g., focus on proper pool and spa maintenance and plumbers' roles in reducing corrosion). b. If corrosion is determined to be a significant copper source, work cooperatively with local water purveyors to reduce and control water corrosivity, as appropriate, and ensure that local plumbing contractors implement best management practices to reduce corrosion in pipes. c. Educate plumbers, designers, and maintenance contractors for pools and spas to encourage best management practices that minimize copper discharges.	With the annual pollution prevention report due each year on February 28 after the completion of Task 1
3. Implement Additional Measures If the three-year rolling mean dissolved copper concentration of the receiving water exceeds 2.8 ug/L, evaluate the effluent copper concentration trend, and if it is increasing, develop and implement additional measures to control copper discharges.	Within 90 days of an exceedance submit a technical report that describes effluent copper concentration trends and, if increasing, identifies additional measures that the Discharger will take to control copper along with an implementation schedule
4. Studies to Reduce Copper Pollutant Impact Uncertainties The Discharger shall conduct or cause to be conducted technical studies to investigate possible copper sediment toxicity and technical studies to investigate sublethal effects on salmonids. Specifically, the Discharger shall include the manner in which the above will be accomplished and describe the studies to be performed with an implementation schedule. To satisfy this requirement, Dischargers may collaborate and conduct these studies as a group.	Submit study plan and schedule with annual pollution prevention report due on February 28, 2010
5. Report on Status of Copper Control Program The Discharger shall submit a report to the Regional Water Board documenting implementation of the copper control program. Additionally, the Discharger shall report the findings and results of the studies completed, planned, or in progress under Task 4. On Task 4 studies, Dischargers may collaborate and provide this information in a single report to satisfy this requirement for the entire group.	With annual pollution prevention report due each year starting with the February 28, 2010 report

8. Cyanide Action Plan

The Discharger shall implement monitoring and surveillance, pretreatment, source control, and pollution prevention for cyanide in accordance with the following tasks and time schedule.

Table 12. Cyanide Action Plan

Task	Compliance Date
1. Review Potential Cyanide Contributors The Discharger shall submit an inventory of potential contributors of cyanide to the Plant (e.g., metal plating operations, hazardous waste recycling, etc.). If no contributors of cyanide are identified, Tasks 2 and 3 are not required, unless the Discharger receives a request to discharge detectable levels of cyanide to the sanitary sewer. If so, the Discharger shall notify the Executive Officer and implement Tasks 2 and 3.	July 1, 2009
2. Implement Cyanide Control Program The Discharger shall submit a plan for and begin implementation of a program to minimize cyanide discharges to the sanitary sewer system consisting, at a minimum, of the following elements: a. Inspect each potential contributor to assess the need to include that contributing source in the control program. b. Inspect contributing sources included in the control program annually. Inspection elements may be based on USEPA guidance, such as Industrial User Inspection and Sampling Manual for POTWs (EPA 831-B-94-01). c. Develop and distribute educational materials to contributing sources and potential contributing sources regarding the need to prevent cyanide discharges. d. Prepare an emergency monitoring and response plan to be implemented if a significant cyanide discharge occurs.	February 28, 2010, with 2009 annual pollution prevention report.
3. Report Status of Cyanide Control Program The Discharger shall submit a report to the Regional Water Board documenting implementation of the cyanide control program.	Annually with annual pollution prevention reports due February 28.

9. Plant Expansion

The permitted average dry weather flow capacity identified in Prohibition III.D. of this Order may be increased to 22.7 MGD by written approval from the Executive Officer in accordance with the following tasks to be performed by the Discharger:

a. Completion of the proposed improvements to the wastewater treatment facilities.

b. Evaluation reliability, capability, and performance of the wastewater treatment facilities to maintain compliance with waste discharge requirements at the proposed higher flow

rate. Hydraulic and organic loading capacities of the treatment facilities shall be evaluated by appropriate combinations of desk-top analyses and treatment process stress testing to simulate design peak loading conditions. Evaluation shall include treatment process operations under both dry weather and wet weather design flow conditions, and effluent disposal capacity including storage and discharge to land through reclamation.

c. Evaluation of the reliability and capacity of the wastewater collection facilities to maintain compliance with waste discharge requirements, specifically the prohibition against sanitary sewage overflows, at the proposed higher wastewater flow rate under both dry weather and wet weather conditions.

d. Adequate financial provisions to ensure adequate operation and maintenance of the wastewater treatment and collection facilities.

e. Submittal of a report documenting completion or implementation of the above tasks to the Executive Officer for approval.

VII. COMPLIANCE DETERMINATION

Compliance with the effluent limitations contained in Section IV of this Order will be determined as specified below:

A. General.

Compliance with effluent limitations for priority pollutants shall be determined using sample reporting protocols defined in Attachment A-Definitions, the MRP (Attachment E), and Fact Sheet Section VI. For purposes of reporting and administrative enforcement by the Regional and State Water Boards, the Discharger shall be deemed out of compliance with effluent limitations if the concentration of the priority pollutant in the monitoring sample is greater than the effluent limitation and greater than or equal to the reporting level (RL).

B. Multiple Sample Data.

When determining compliance with an AMEL or MDEL for priority pollutants and more than one sample result is available, the Discharger shall compute the arithmetic mean unless the data set contains one or more reported determinations of DNQ or ND. In those cases, the Discharger shall compute the median in place of the arithmetic mean in accordance with the following procedure:

1. The data set shall be ranked from low to high, ranking the reported ND determinations lowest, DNQ determinations next, followed by quantified values (if any). The order of the individual ND or DNQ determinations is unimportant.

2. The median value of the data set shall be determined. If the data set has an odd number of data points, then the median is the middle value. If the data set has an even number of data points, then the median is the average of the two values around the middle unless one or both of the points are ND or DNQ, in which case the median value shall be the lower of the two data points where DNQ is lower than a value and ND is lower than DNQ.

ATTACHMENT A – DEFINITIONS

Arithmetic Mean (μ), also called the average, is the sum of measured values divided by the number of samples. For ambient water concentrations, the arithmetic mean is calculated as follows:

$$\textbf{Arithmetic mean} = \mu = \Sigma x / n$$

where: Σx is the sum of the measured ambient water concentrations, and n is the number of samples.

Average Monthly Effluent Limitation (AMEL): the highest allowable average of daily discharges over a calendar month, calculated as the sum of all daily discharges measured during a calendar month divided by the number of daily discharges measured during that month.

Average Weekly Effluent Limitation (AWEL): the highest allowable average of daily discharges over a calendar week (Sunday through Saturday), calculated as the sum of all daily discharges measured during a calendar week divided by the number of daily discharges measured during that week.

Bioaccumulative pollutants are those substances taken up by an organism from its surrounding medium through gill membranes, epithelial tissue, or from food and subsequently concentrated and retained in the body of the organism.

Carcinogenic pollutants are substances that are known to cause cancer in living organisms.

Coefficient of Variation (*CV*) is a measure of the data variability and is calculated as the estimated standard deviation divided by the arithmetic mean of the observed values.

Daily Discharge: Daily Discharge is defined as either: (1) the total mass of the constituent discharged over the calendar day (12:00 am through 11:59 pm) or any 24-hour period that reasonably represents a calendar day for purposes of sampling (as specified in this Order), for a constituent with limitations expressed in units of mass or; (2) the unweighted arithmetic mean measurement of the constituent over the day for a constituent with limitations expressed in other units of measurement (e.g., concentration).

The daily discharge may be determined by the analytical results of a composite sample taken over the course of one day (a calendar day or other 24-hour period defined as a day) or by the arithmetic mean of analytical results from one or more grab samples taken over the course of the day.

For composite sampling, if 1 day is defined as a 24-hour period other than a calendar day, the analytical result for the 24-hour period will be considered as the result for the calendar day in which the 24-hour period ends.

Detected, but Not Quantified (DNQ) are those sample results less than the RL, but greater than or equal to the laboratory's MDL.

Dilution Credit is the amount of dilution granted to a discharge in the calculation of a water quality-based effluent limitation, based on the allowance of a specified mixing zone. It is calculated from the dilution ratio or determined through conducting a mixing zone study or modeling of the discharge and receiving water.

Effluent Concentration Allowance (ECA) is a value derived from the water quality criterion/objective, dilution credit, and ambient background concentration that is used, in conjunction with the coefficient of variation for the effluent monitoring data, to calculate a long-term average (LTA) discharge concentration. The ECA has the same meaning as waste load allocation (WLA) as used in USEPA guidance (Technical Support Document For Water Quality-based Toxics Control, March 1991, second printing, EPA/505/2-90-001).

Enclosed Bays means indentations along the coast that enclose an area of oceanic water within distinct headlands or harbor works. Enclosed bays include all bays where the narrowest distance between the headlands or outermost harbor works is less than 75 percent of the greatest dimension of the enclosed portion of San Francisco Bay. Enclosed bays include, but are not limited to, Humboldt Bay, Bodega Harbor, Tomales Bay, Drake's Estero, San Francisco Bay, Morro Bay, Los Angeles-Long Beach Harbor, Upper and Lower Newport Bay, Mission Bay, and San Diego Bay. Enclosed bays do not include inland surface waters or ocean waters.

Estimated Chemical Concentration is the estimated chemical concentration that results from the confirmed detection of the substance by the analytical method below the ML value.

Estuaries means waters, including coastal lagoons, located at the mouths of streams that serve as areas of mixing for fresh and ocean waters. Coastal lagoons and mouths of streams that are temporarily separated from the ocean by sandbars shall be considered estuaries. Estuarine waters shall be considered to extend from a bay or the open ocean to a point upstream where there is no significant mixing of fresh water and seawater. Estuarine waters include, but are not limited to, the Sacramento-San Joaquin Delta, as defined in California Water Code section 12220, Suisun Bay, Carquinez Strait downstream to the Carquinez Bridge, and appropriate areas of the Smith, Mad, Eel, Noyo, Russian, Klamath, San Diego, and Otay rivers. Estuaries do not include inland surface waters or ocean waters.

Inland Surface Waters are all surface waters of the State that do not include the ocean, enclosed bays, or estuaries.

Instantaneous Maximum Effluent Limitation: the highest allowable value for any single grab sample or aliquot (i.e., each grab sample or aliquot is independently compared to the instantaneous maximum limitation).

Instantaneous Minimum Effluent Limitation: the lowest allowable value for any single grab sample or aliquot (i.e., each grab sample or aliquot is independently compared to the instantaneous minimum limitation).

Maximum Daily Effluent Limitation (MDEL) means the highest allowable daily discharge of a pollutant, over a calendar day (or 24-hour period). For pollutants with limitations expressed in units of mass, the daily discharge is calculated as the total mass of the pollutant discharged over the day. For pollutants with limitations expressed in other units of measurement, the daily discharge is calculated as the arithmetic mean measurement of the pollutant over the day.

Median is the middle measurement in a set of data. The median of a set of data is found by first arranging the measurements in order of magnitude (either increasing or decreasing order). If the number of measurements (n) is odd, then the median = $X_{(n+1)/2}$. If n is even, then the median = $(X_{n/2} + X_{(n/2)+1})/2$ (i.e., the midpoint between the $n/2$ and $n/2+1$).

Method Detection Limit (MDL) is the minimum concentration of a substance that can be measured and reported with 99 percent confidence that the analyte concentration is greater than zero, as defined in title 40 of the Code of Federal Regulations, Part 136, Attachment B, revised as of July 3, 1999.

Minimum Level (ML) is the concentration at which the entire analytical system must give a recognizable signal and acceptable calibration point. The ML is the concentration in a sample that is equivalent to the concentration of the lowest calibration standard analyzed by a specific analytical procedure, assuming that all the method specified sample weights, volumes, and processing steps have been followed.

Mixing Zone is a limited volume of receiving water that is allocated for mixing with a wastewater discharge where water quality criteria can be exceeded without causing adverse effects to the overall water body.

Not Detected (ND) are those sample results less than the laboratory's MDL.

Ocean Waters are the territorial marine waters of the State as defined by California law to the extent these waters are outside of enclosed bays, estuaries, and coastal lagoons. Discharges to ocean waters are regulated in accordance with the State Water Board's California Ocean Plan.

Persistent pollutants are substances for which degradation or decomposition in the environment is nonexistent or very slow.

Pollutant Minimization Program (PMP) means waste minimization and pollution prevention actions that include, but are not limited to, product substitution, waste stream recycling, alternative waste management methods, and education of the public and businesses. The goal of the PMP shall be to reduce all potential sources of a priority pollutant(s) through pollutant minimization (control) strategies, including pollution prevention measures as appropriate, to maintain the effluent concentration at or below the water quality-based effluent limitation. Pollution prevention measures may be particularly appropriate for persistent bioaccumulative priority pollutants where there is evidence that beneficial uses are being impacted. The Regional Water Board may consider cost effectiveness when establishing the requirements of a PMP. The completion and implementation of a Pollution Prevention Plan, if required pursuant to California Water Code section 13263.3(d), shall be considered to fulfill the PMP requirements.

Pollution Prevention means any action that causes a net reduction in the use or generation of a hazardous substance or other pollutant that is discharged into water and includes, but is not limited to, input change, operational improvement, production process change, and product reformulation (as defined in California Water Code section 13263.3). Pollution prevention does not include actions that merely shift a pollutant in wastewater from one environmental medium to another environmental medium, unless clear environmental benefits of such an approach are identified to the satisfaction of the State or Regional Water Board.

Reporting Level (RL) is the ML (and its associated analytical method) chosen by the Discharger for reporting and compliance determination from the MLs included in this Order. The MLs included in this Order correspond to approved analytical methods for reporting a sample result that are selected by the Regional Water Board either from Appendix 4 of the SIP in accordance with section 2.4.2 of the SIP or established in accordance with section 2.4.3 of the SIP. The ML is based on the proper application of method-based analytical procedures for sample preparation and the absence of any matrix interferences.

Other factors may be applied to the ML depending on the specific sample preparation steps employed. For example, the treatment typically applied in cases where there are matrix-effects is to dilute the sample or sample aliquot by a factor of ten. In such cases, this additional factor must be applied to the ML in the computation of the RL.

Satellite Collection System is the portion, if any, of a sanitary sewer system owned or operated by a different public agency than the agency that owns and operates the wastewater treatment facility that a sanitary sewer system is tributary to.

Source of Drinking Water is any water designated as municipal or domestic supply (MUN) in a Regional Water Board Basin Plan.

Standard Deviation (σ) is a measure of variability that is calculated as follows:

$$\sigma = (\sum[(x - \mu)^2]/(n - 1))^{0.5}$$

where:
x is the observed value;
μ is the arithmetic mean of the observed values; and
n is the number of samples.

Toxicity Reduction Evaluation (TRE) is a study conducted in a step-wise process designed to identify the causative agents of effluent or ambient toxicity, isolate the sources of toxicity, evaluate the effectiveness of toxicity control options, and then confirm the reduction in toxicity. The first steps of the TRE consist of the collection of data relevant to the toxicity, including additional toxicity testing, and an evaluation of facility operations and maintenance practices, and best management practices. A Toxicity Identification Evaluation (TIE) may be required as part of the TRE, if appropriate. (A TIE is a set of procedures to identify the specific chemical(s) responsible for toxicity. These procedures are performed in three phases (characterization, identification, and confirmation) using aquatic organism toxicity tests.)

ATTACHMENT B – FACILITY MAP

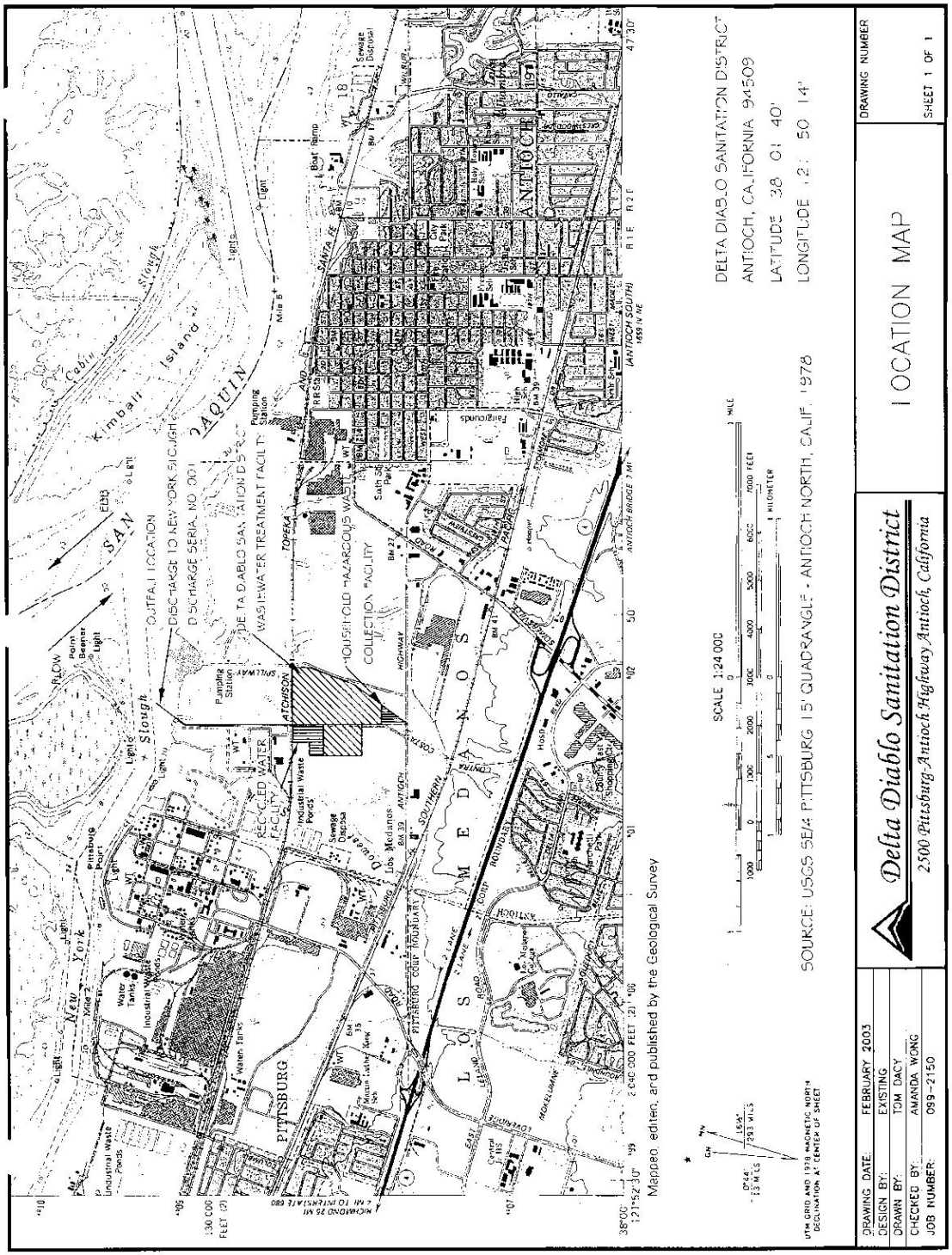

ATTACHMENT C – PROCESS FLOW DIAGRAM

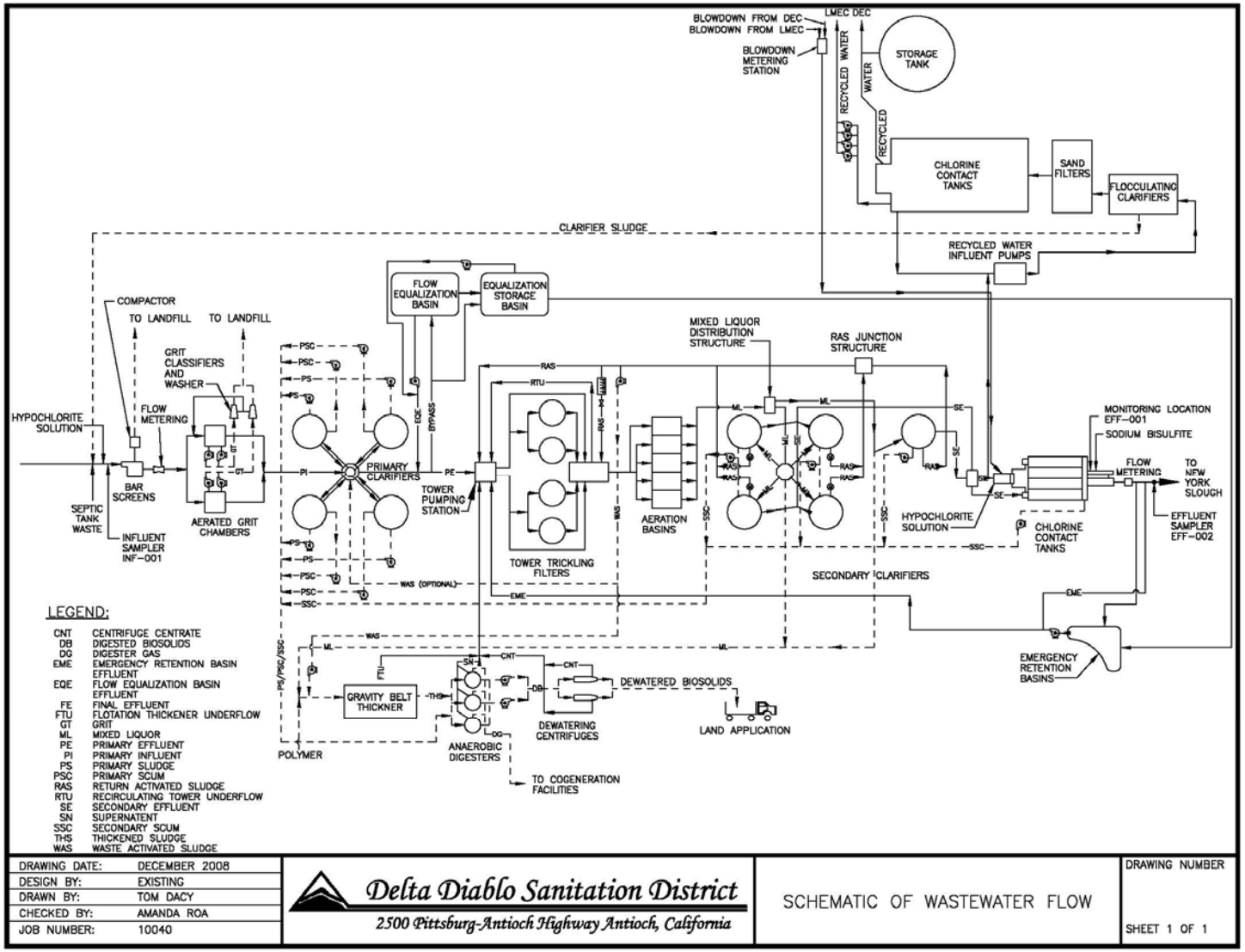

ATTACHMENT D –STANDARD PROVISIONS

I. STANDARD PROVISIONS – PERMIT COMPLIANCE

A. Duty to Comply

1. The Discharger must comply with all of the conditions of this Order. Any noncompliance constitutes a violation of the Clean Water Act (CWA) and the California Water Code and is grounds for enforcement action, for permit termination, revocation and reissuance, or modification; or denial of a permit renewal application. (40 C.F.R. § 122.41(a).)

2. The Discharger shall comply with effluent standards or prohibitions established under Section 307(a) of the CWA for toxic pollutants and with standards for sewage sludge use or disposal established under Section 405(d) of the CWA within the time provided in the regulations that establish these standards or prohibitions, even if this Order has not yet been modified to incorporate the requirement. (40 C.F.R. § 122.41(a)(1).)

B. Need to Halt or Reduce Activity Not a Defense

It shall not be a defense for a Discharger in an enforcement action that it would have been necessary to halt or reduce the permitted activity in order to maintain compliance with the conditions of this Order. (40 C.F.R. § 122.41(c).)

C. Duty to Mitigate

The Discharger shall take all reasonable steps to minimize or prevent any discharge or sludge use or disposal in violation of this Order that has a reasonable likelihood of adversely affecting human health or the environment. (40 C.F.R. § 122.41(d).)

D. Proper Operation and Maintenance

The Discharger shall at all times properly operate and maintain all facilities and systems of treatment and control (and related appurtenances) which are installed or used by the Discharger to achieve compliance with the conditions of this Order. Proper operation and maintenance also includes adequate laboratory controls and appropriate quality assurance procedures. This provision requires the operation of backup or auxiliary facilities or similar systems that are installed by a Discharger only when necessary to achieve compliance with the conditions of this Order (40 C.F.R. § 122.41(e)).

E. Property Rights

1. This Order does not convey any property rights of any sort or any exclusive privileges. (40 C.F.R. § 122.41(g).)

2. The issuance of this Order does not authorize any injury to persons or property or invasion of other private rights, or any infringement of state or local law or regulations. (40 C.F.R. § 122.5(c).)

F. Inspection and Entry

The Discharger shall allow the Regional Water Board, State Water Board, United States Environmental Protection Agency (USEPA), and/or their authorized representatives (including an authorized contractor acting as their representative), upon the presentation of credentials and other documents, as may be required by law, to (40 C.F.R. § 122.41(i); Wat. Code, § 13383):

1. Enter upon the Discharger's premises where a regulated facility or activity is located or conducted, or where records are kept under the conditions of this Order (40 C.F.R. § 122.41(i)(1));

2. Have access to and copy, at reasonable times, any records that must be kept under the conditions of this Order (40 C.F.R. § 122.41(i)(2));

3. Inspect and photograph, at reasonable times, any facilities, equipment (including monitoring and control equipment), practices, or operations regulated or required under this Order (40 C.F.R. § 122.41(i)(3)); and

4. Sample or monitor, at reasonable times, for the purposes of assuring Order compliance or as otherwise authorized by the CWA or the Water Code, any substances or parameters at any location. (40 C.F.R. § 122.41(i)(4).)

G. Bypass

1. Definitions

   a. "Bypass" means the intentional diversion of waste streams from any portion of a treatment facility. (40 C.F.R. § 122.41(m)(1)(i).)

   b. "Severe property damage" means substantial physical damage to property, damage to the treatment facilities, which causes them to become inoperable, or substantial and permanent loss of natural resources that can reasonably be expected to occur in the absence of a bypass. Severe property damage does not mean economic loss caused by delays in production. (40 C.F.R. § 122.41(m)(1)(ii).)

2. Bypass not exceeding limitations. The Discharger may allow any bypass to occur which does not cause exceedances of effluent limitations, but only if it is for essential maintenance to assure efficient operation. These bypasses are not subject to the provisions listed in Standard Provisions – Permit Compliance I.G.3, I.G.4, and I.G.5 below. (40 C.F.R. § 122.41(m)(2).)

3. Prohibition of bypass. Bypass is prohibited, and the Regional Water Board may take enforcement action against a Discharger for bypass, unless (40 C.F.R. § 122.41(m)(4)(i)):

   a. Bypass was unavoidable to prevent loss of life, personal injury, or severe property damage (40 C.F.R. § 122.41(m)(4)(i)(A));

   b. There were no feasible alternatives to the bypass, such as the use of auxiliary treatment facilities, retention of untreated wastes, or maintenance during normal periods of

equipment downtime. This condition is not satisfied if adequate back-up equipment should have been installed in the exercise of reasonable engineering judgment to prevent a bypass that occurred during normal periods of equipment downtime or preventive maintenance (40 C.F.R. § 122.41(m)(4)(i)(B)); and

c. The Discharger submitted notice to the Regional Water Board as required under Standard Provisions – Permit Compliance I.G.5 below. (40 C.F.R. § 122.41(m)(4)(i)(C).)

4. The Regional Water Board may approve an anticipated bypass, after considering its adverse effects, if the Regional Water Board determines that it will meet the three conditions listed in Standard Provisions – Permit Compliance I.G.3 above. (40 C.F.R. § 122.41(m)(4)(ii).)

5. Notice

a. Anticipated bypass. If the Discharger knows in advance of the need for a bypass, it shall submit a notice, if possible at least 10 days before the date of the bypass. (40 C.F.R. § 122.41(m)(3)(i).)

b. Unanticipated bypass. The Discharger shall submit notice of an unanticipated bypass as required in Standard Provisions - Reporting V.E below (24-hour notice). (40 C.F.R. § 122.41(m)(3)(ii).)

H. Upset

Upset means an exceptional incident in which there is unintentional and temporary noncompliance with technology-based permit effluent limitations because of factors beyond the reasonable control of the Discharger. An upset does not include noncompliance to the extent caused by operational error, improperly designed treatment facilities, inadequate treatment facilities, lack of preventive maintenance, or careless or improper operation. (40 C.F.R. § 122.41(n)(1).)

1. Effect of an upset. An upset constitutes an affirmative defense to an action brought for noncompliance with such technology-based permit effluent limitations if the requirements of Standard Provisions – Permit Compliance I.H.2 below are met. No determination made during administrative review of claims that noncompliance was caused by upset, and before an action for noncompliance, is final administrative action subject to judicial review. (40 C.F.R. § 122.41(n)(2).).

2. Conditions necessary for a demonstration of upset. A Discharger who wishes to establish the affirmative defense of upset shall demonstrate, through properly signed, contemporaneous operating logs or other relevant evidence that (40 C.F.R. § 122.41(n)(3)):

a. An upset occurred and that the Discharger can identify the cause(s) of the upset (40 C.F.R. § 122.41(n)(3)(i));

b. The permitted facility was, at the time, being properly operated (40 C.F.R. § 122.41(n)(3)(ii));

c. The Discharger submitted notice of the upset as required in Standard Provisions – Reporting V.E.2.b below (24-hour notice) (40 C.F.R. § 122.41(n)(3)(iii)); and

d. The Discharger complied with any remedial measures required under Standard Provisions – Permit Compliance I.C above. (40 C.F.R. § 122.41(n)(3)(iv).)

3. Burden of proof. In any enforcement proceeding, the Discharger seeking to establish the occurrence of an upset has the burden of proof. (40 C.F.R. § 122.41(n)(4).)

II. STANDARD PROVISIONS – PERMIT ACTION

A. General

This Order may be modified, revoked and reissued, or terminated for cause. The filing of a request by the Discharger for modification, revocation and reissuance, or termination, or a notification of planned changes or anticipated noncompliance does not stay any Order condition. (40 C.F.R. § 122.41(f).)

B. Duty to Reapply

If the Discharger wishes to continue an activity regulated by this Order after the expiration date of this Order, the Discharger must apply for and obtain a new permit. (40 C.F.R. § 122.41(b).)

C. Transfers

This Order is not transferable to any person except after notice to the Regional Water Board. The Regional Water Board may require modification or revocation and reissuance of this Order to change the name of the Discharger and incorporate such other requirements as may be necessary under the CWA and the Water Code. (40 C.F.R. § 122.41(l)(3); § 122.61.)

III. STANDARD PROVISIONS – MONITORING

A. Samples and measurements taken for the purpose of monitoring shall be representative of the monitored activity. (40 C.F.R. § 122.41(j)(1).)

B. Monitoring results must be conducted according to test procedures under Part 136 or, in the case of sludge use or disposal, approved under Part 136 unless otherwise specified in Part 503 unless other test procedures have been specified in this Order. (40 C.F.R. § 122.41(j)(4); § 122.44(i)(1)(iv).)

IV. STANDARD PROVISIONS – RECORDS

A. Except for records of monitoring information required by this Order related to the Discharger's sewage sludge use and disposal activities, which shall be retained for a period of at least five years (or longer as required by Part 503), the Discharger shall retain records of all monitoring information, including all calibration and maintenance records and all original strip chart recordings for continuous monitoring instrumentation, copies of all reports required by this Order, and records of all data used to complete the application for this Order, for a period of at least three (3) years from the date of the sample, measurement, report or application. This period may be extended by request of the Regional Water Board Executive Officer at any time. (40 C.F.R. § 122.41(j)(2).)

B. Records of monitoring information shall include:

1. The date, exact place, and time of sampling or measurements (40 C.F.R. § 122.41(j)(3)(i));

2. The individual(s) who performed the sampling or measurements (40 C.F.R. § 122.41(j)(3)(ii));

3. The date(s) analyses were performed (40 C.F.R. § 122.41(j)(3)(iii));

4. The individual(s) who performed the analyses (40 C.F.R. § 122.41(j)(3)(iv));

5. The analytical techniques or methods used (40 C.F.R. § 122.41(j)(3)(v)); and

6. The results of such analyses. (40 C.F.R. § 122.41(j)(3)(vi).)

C. Claims of confidentiality for the following information will be denied (40 C.F.R. § 122.7(b)):

1. The name and address of any permit applicant or Discharger (40 C.F.R. § 122.7(b)(1)); and

2. Permit applications and attachments, permits and effluent data. (40 C.F.R. § 122.7(b)(2).)

V. STANDARD PROVISIONS – REPORTING

A. Duty to Provide Information

The Discharger shall furnish to the Regional Water Board, State Water Board, or USEPA within a reasonable time, any information which the Regional Water Board, State Water Board, or USEPA may request to determine whether cause exists for modifying, revoking and reissuing, or terminating this Order or to determine compliance with this Order. Upon request, the Discharger shall also furnish to the Regional Water Board, State Water Board, or USEPA copies of records required to be kept by this Order. (40 C.F.R. § 122.41(h); Wat. Code, § 13267.)

B. Signatory and Certification Requirements

1. All applications, reports, or information submitted to the Regional Water Board, State Water Board, and/or USEPA shall be signed and certified in accordance with Standard Provisions – Reporting V.B.2, V.B.3, V.B.4, and V.B.5 below. (40 C.F.R. § 122.41(k).)

2. All permit applications shall be signed by either a principal executive officer or ranking elected official. For purposes of this provision, a principal executive officer of a federal agency includes: (i) the chief executive officer of the agency, or (ii) a senior executive officer having responsibility for the overall operations of a principal geographic unit of the agency (e.g., Regional Administrators of USEPA). (40 C.F.R. § 122.22(a)(3).).

3. All reports required by this Order and other information requested by the Regional Water Board, State Water Board, or USEPA shall be signed by a person described in Standard Provisions – Reporting V.B.2 above, or by a duly authorized representative of that person. A person is a duly authorized representative only if:

   a. The authorization is made in writing by a person described in Standard Provisions – Reporting V.B.2 above (40 C.F.R. § 122.22(b)(1));

   b. The authorization specifies either an individual or a position having responsibility for the overall operation of the regulated facility or activity such as the position of Plant

manager, operator of a well or a well field, superintendent, position of equivalent responsibility, or an individual or position having overall responsibility for environmental matters for the company. (A duly authorized representative may thus be either a named individual or any individual occupying a named position.) (40 C.F.R. § 122.22(b)(2)); and

c. The written authorization is submitted to the Regional Water Board and State Water Board. (40 C.F.R. § 122.22(b)(3).)

4. If an authorization under Standard Provisions – Reporting V.B.3 above is no longer accurate because a different individual or position has responsibility for the overall operation of the facility, a new authorization satisfying the requirements of Standard Provisions – Reporting V.B.3 above must be submitted to the Regional Water Board and State Water Board prior to or together with any reports, information, or applications, to be signed by an authorized representative. (40 C.F.R. § 122.22(c).)

5. Any person signing a document under Standard Provisions – Reporting V.B.2 or V.B.3 above shall make the following certification:

   "I certify under penalty of law that this document and all attachments were prepared under my direction or supervision in accordance with a system designed to assure that qualified personnel properly gather and evaluate the information submitted. Based on my inquiry of the person or persons who manage the system or those persons directly responsible for gathering the information, the information submitted is, to the best of my knowledge and belief, true, accurate, and complete. I am aware that there are significant penalties for submitting false information, including the possibility of fine and imprisonment for knowing violations." (40 C.F.R. § 122.22(d).)

C. Monitoring Reports

1. Monitoring results shall be reported at the intervals specified in the Monitoring and Reporting Program (Attachment E) in this Order. (40 C.F.R. § 122.22(l)(4).)

2. Monitoring results must be reported on a Discharge Monitoring Report (DMR) form or forms provided or specified by the Regional Water Board or State Water Board for reporting results of monitoring of sludge use or disposal practices. (40 C.F.R. § 122.41(l)(4)(i).)

3. If the Discharger monitors any pollutant more frequently than required by this Order using test procedures approved under Part 136 or, in the case of sludge use or disposal, approved under Part 136 unless otherwise specified in Part 503, or as specified in this Order, the results of this monitoring shall be included in the calculation and reporting of the data submitted in the DMR or sludge reporting form specified by the Regional Water Board. (40 C.F.R. § 122.41(l)(4)(ii).)

4. Calculations for all limitations, which require averaging of measurements, shall utilize an arithmetic mean unless otherwise specified in this Order. (40 C.F.R. § 122.41(l)(4)(iii).)

D. Compliance Schedules

Reports of compliance or noncompliance with, or any progress reports on, interim and final requirements contained in any compliance schedule of this Order, shall be submitted no later than 14 days following each schedule date. (40 C.F.R. § 122.41(l)(5).)

E. Twenty-Four Hour Reporting

1. The Discharger shall report any noncompliance that may endanger health or the environment. Any information shall be provided orally within 24 hours from the time the Discharger becomes aware of the circumstances. A written submission shall also be provided within five (5) days of the time the Discharger becomes aware of the circumstances. The written submission shall contain a description of the noncompliance and its cause; the period of noncompliance, including exact dates and times, and if the noncompliance has not been corrected, the anticipated time it is expected to continue; and steps taken or planned to reduce, eliminate, and prevent reoccurrence of the noncompliance. (40 C.F.R. § 122.41(l)(6)(i).)

2. The following shall be included as information that must be reported within 24 hours under this paragraph (40 C.F.R. § 122.41(l)(6)(ii)):

   a. Any unanticipated bypass that exceeds any effluent limitation in this Order. (40 C.F.R. § 122.41(l)(6)(ii)(A).)

   b. Any upset that exceeds any effluent limitation in this Order. (40 C.F.R. § 122.41(l)(6)(ii)(B).)

3. The Regional Water Board may waive the above-required written report under this provision on a case-by-case basis if an oral report has been received within 24 hours. (40 C.F.R. § 122.41(l)(6)(iii).)

F. Planned Changes

The Discharger shall give notice to the Regional Water Board as soon as possible of any planned physical alterations or additions to the permitted facility. Notice is required under this provision only when (40 C.F.R. § 122.41(l)(1)):

1. The alteration or addition to a permitted facility may meet one of the criteria for determining whether a facility is a new source in section 122.29(b) (40 C.F.R. § 122.41(l)(1)(i)); or

2. The alteration or addition could significantly change the nature or increase the quantity of pollutants discharged. This notification applies to pollutants that are not subject to effluent limitations in this Order. (40 C.F.R. § 122.41(l)(1)(ii).)

3. The alteration or addition results in a significant change in the Discharger's sludge use or disposal practices, and such alteration, addition, or change may justify the application of permit conditions that are different from or absent in the existing permit, including notification of additional use or disposal sites not reported during the permit application

process or not reported pursuant to an approved land application plan. (40 C.F.R.§ 122.41(l)(1)(iii).)

G. Anticipated Noncompliance

The Discharger shall give advance notice to the Regional Water Board or State Water Board of any planned changes in the permitted facility or activity that may result in noncompliance with General Order requirements. (40 C.F.R. § 122.41(l)(2).)

H. Other Noncompliance

The Discharger shall report all instances of noncompliance not reported under Standard Provisions – Reporting V.C, V.D, and V.E above at the time monitoring reports are submitted. The reports shall contain the information listed in Standard Provision – Reporting V.E above. (40 C.F.R. § 122.41(l)(7).)

I. Other Information

When the Discharger becomes aware that it failed to submit any relevant facts in a permit application, or submitted incorrect information in a permit application or in any report to the Regional Water Board, State Water Board, or USEPA, the Discharger shall promptly submit such facts or information. (40 C.F.R. § 122.41(l)(8).)

VI. STANDARD PROVISIONS – ENFORCEMENT

A. The Regional Water Board is authorized to enforce the terms of this Order under several provisions of the Water Code, including, but not limited to, sections 13385, 13386, and 13387.

VII. ADDITIONAL PROVISIONS – NOTIFICATION LEVELS

A. Publicly-Owned Treatment Works (POTWs)

All POTWs shall provide adequate notice to the Regional Water Board of the following (40 C.F.R. § 122.42(b)):

1. Any new introduction of pollutants into the POTW from an indirect discharger that would be subject to sections 301 or 306 of the CWA if it were directly discharging those pollutants (40 C.F.R. § 122.42(b)(1)); and

2. Any substantial change in the volume or character of pollutants being introduced into that POTW by a source introducing pollutants into the POTW at the time of adoption of this Order. (40 C.F.R. § 122.42(b)(2).)

3. Adequate notice shall include information on the quality and quantity of effluent introduced into the POTW as well as any anticipated impact of the change on the quantity or quality of effluent to be discharged from the POTW. (40 C.F.R. § 122.42(b)(3).)

ATTACHMENT E – MONITORING AND REPORTING PROGRAM

Table of Contents

I. General Monitoring Provisions E-2
II. Monitoring Locations E-3
III. Influent Monitoring Requirements E-4
IV. Effluent Monitoring Requirements E-4
V. Whole Effluent Toxicity Testing Requirements E-6
VI. Land Discharge Monitoring Requirements E-9
VIII. Receiving water Monitoring Requirements E-9
IX. Other Monitoring Requirements E-10
X. Modifications to Part A of Self-Monitoring Program (Attachment G) E-10
XI. Reporting Requirements E-12
A. General Monitoring and Reporting Requirements E-12
B. Self Monitoring Reports E-12
C. Discharge Monitoring Reports E-14
D. Other Reports E-15

Tables

Table E-1. Test Methods and Minimum Levels for Pollutants with Reasonable Potential E-3
Table E-2. Monitoring Station Locations E-3
Table E-3. Influent Monitoring – Monitoring Location INF-001 ..... E-4
Table E-4. Effluent Monitoring – Monitoring Location EFF-001 ..... E-4
Table E-5. Receiving Water Monitoring E-9
Table E-6. Pretreatment Monitoring Requirements E-10
Table E-7. Monitoring Periods and Reporting Schedule E-12

ATTACHMENT E – MONITORING AND REPORTING PROGRAM (MRP)

National Pollutant Discharge Elimination System (NPDES) regulations at 40 CFR 122.48 require that all NPDES permits specify monitoring and reporting requirements. California Water Code (CWC) sections 13267 and 13383 also authorize the Regional Water Quality Control Board (Regional Water Board) to require technical and monitoring reports. This MRP establishes monitoring and reporting requirements that implement the federal and State regulations.

I. GENERAL MONITORING PROVISIONS

A. The Discharger shall comply with the MRP for this Order as dated by the Regional Water Board, and with all of the Self-Monitoring Program (SMP), Part A, adopted August 1993 (SMP, Attachment G). The MRP and SMP may be amended by the Executive Officer pursuant to United States Environmental Protection Agency (USEPA) regulations at 40 CFR 122.62, 122.63, and 124.5. If any discrepancies exist between the MRP and SMP, the MRP prevails.

B. All analyses shall be conducted using current USEPA methods, or methods that have been approved by the USEPA Regional Administrator pursuant to 40 CFR 136.4 and 40 CFR 136.5, or equivalent methods that are commercially and reasonably available and that provide quantification of sampling parameters and constituents sufficient to evaluate compliance with applicable effluent limits and to perform reasonable potential analysis. Equivalent methods must be more sensitive than those specified in 40 CFR 136, must be specified in the permit, and must be approved for use by the Executive Officer following consultation with the State Water Quality Control Board (State Water Board) Quality Assurance Program.

C. Sampling and analysis of additional constituents is required pursuant to Table 1 of the Regional Water Board's August 6, 2001, Letter entitled *Requirement for Monitoring of Pollutants in Effluent and Receiving Water to Implement New Statewide Regulations and Policy* (Attachment G) in accordance with the schedule specified in Table E-4 below.

D. Laboratories analyzing monitoring samples shall be certified by the Department of Public Health, in accordance with CWC section 13176 and must include quality assurance/quality control data with their reports.

E. For compliance and reasonable potential monitoring, analyses shall be conducted using the commercially available and reasonably achievable detection levels that are lower than the effluent limitations. The objective is to provide quantification of constituents sufficient to allow evaluation of observed concentrations with respect to the Minimum Levels (MLs) given in Table 8 of the Order.

MLs are the concentrations at which the entire analytical system must give a recognizable signal and acceptable calibration point. The ML is the concentration in a sample that is equivalent to the concentration of the lowest calibration standard analyzed by a specific analytical procedure, assuming that all the method specified sample weights, volumes, and processing steps have been followed.

Table E-1 lists the test methods the Discharger may use for compliance and reasonable potential monitoring for the pollutants with effluent limits.

Table E-1. Test Methods and Minimum Levels for Pollutants with Reasonable Potential

CTR #	Constituent	Types of Analytical Methods [1] Minimum Levels (µg/L)											
		GC	GCMS	LC	Color	FAA	GFAA	ICP	ICPMS	SPGFAA	HYDRIDE	CVAF	DCP
6	Copper								0.5				
10	Selenium [2]								1				
14	Cyanide				5								
16-TEQ	Dioxin-TEQ [3]												
20	Bromoform	0.5											
23	Chlorodibromomethane	0.5											
36	Methylene Chloride	0.5											
68	Bis(2-ethylhexyl) phthalate		5										
--	Total Ammonia	0.2 mg/L (as N) using titration method											

Footnotes to Table E-1:

[1] Analytical Methods / Laboratory techniques are defined as follows:
Color = Colorimetric;
CVAF = Cold Vapor Atomic Fluorescence.
DCP = Direct Current Plasma
FAA = Furnace Atomic Absorption;
GC = Gas Chromatography
GCMS = Gas Chromatography Mass Spectroscopy
GFAA = Graphite Furnace Atomic Absorption;
ICP = Inductively Coupled Plasma
ICPMS = Inductively Coupled Plasma/Mass Spectrometry;
LC = Liquid Chromatography
SPGFAA = Stabilized Platform Graphite Furnace Atomic Absorption (i.e. USEPA 200.9)

[2] The ML of 1 ug/L is based on using the reaction cell mode before ICPMS to reduce positive interference

[3] Use USEPA Method 1613. MLs shall be those specified by Table 8 of the Order for each congener.

II. MONITORING LOCATIONS

The Discharger shall establish the following monitoring locations to demonstrate compliance with the effluent limitations, discharge specifications, and other requirements in this Order.

Table E-2. Monitoring Station Locations

Type of Sampling Location	Monitoring Location Name	Monitoring Location Description
Influent	INF-001	At a point in the treatment facilities upstream of the primary clarifiers at which all waste tributary to the treatment system is present, and preceding any phase of treatment, formerly A-001.
Effluent	EFF-001	At a point after full treatment, including disinfection (formerly E-001-D).
Effluent	EFF-002	At a point after full treatment, including disinfection and dechlorination, and prior to contact with the receiving water (formerly E-001-S).
Receiving Water	RSW-001	At a point in New York Slough directly above the center of the diffuser, formerly C-1.
Receiving Water	RSW-002-A	At a point in New York Slough approximately 300 m upstream from the center of the diffuser.
Receiving Water	RSW-002-B	At a point in New York Slough approximately 300 m downstream from the center of the diffuser.

III. INFLUENT MONITORING REQUIREMENTS

The Discharger shall monitor influent to the Plant at INF-001 as follows:

Table E-3. Influent Monitoring – Monitoring Location INF-001

Parameter	Units	Sample Type	Minimum Sampling Frequency
Flow Rate [1]	MGD	Cont/D	Cont
Biochemical Oxygen Demand (BOD)	mg/L	C-24	2/Week
	kg/day	C-24	2/Week
Total Suspended Solids (TSS)	mg/L	C-24	5/Week
	kg/day	C-24	5/Week

Footnotes t o Table E-3:

Unit Abbreviations:

MGD = million gallons per day
mg/L = milligrams per liter
kg/d = kilograms per day

Sample Type Abbreviations:

Cont = measured continuously
Cont/D = measured continuously, and recorded and reported daily
Cont/H = measured continuously, and recorded and reported hourly
C-24 = 24-hour composite

[1] For influent flows, the following information shall be reported monthly:

Daily: Total Daily Flow Volume (MG)
Monthly: Monthly Average Flow (MGD)
Monthly: Maximum Daily Flow (MGD)
Monthly: Minimum Daily Flow (MGD)
Monthly: Total Flow Volume (MG)

IV. EFFLUENT MONITORING REQUIREMENTS

The Discharger shall monitor treated effluent from the Plant at EFF-002 as follows, except for bacteria which shall be monitored at EFF-001 as follows:

Table E-4. Effluent Monitoring – Monitoring Location EFF-002

Parameter	Units	Sample Type	Minimum Sampling Frequency
Flow Rate [1]	MGD	Cont	Cont/D
BOD	mg/L	C-24	2/week
	kg/day	C-24	2/week
TSS	mg/L	C-24	5/week
	kg/day	C-24	5/week
BOD and TSS percent removal	%	Calculate	1/month
pH [2]	s.u.	G	1/day
Total Chlorine Residual [3]	mg/L	Cont/H	1/ hour
	kg/day	Calculate	1/ hour
Oil and Grease[4]	mg/L	C-24	1/month
	kg/day	C-24	1/month

Parameter	Units	Sample Type	Minimum Sampling Frequency
Enterococcus Bacteria	CFU/100 mL	G	3/week at EFF-001
Acute Toxicity [5]	% survival	C-24	1/quarter
Chronic Toxicity [6]	TUc	C-24	2/year
Temperature	^{o}C	G	1/quarter
Copper	µg/L	C-24	1/month
Selenium	µg/L	C-24	1/month
Cyanide	µg/L	G	1/month
Dioxin-TEQ	µg/L	G	2/year
Bromoform	µg/L	G	2/year
Chlorodibromomethane	µg/L	G	2/year
Methylene Chloride	µg/L	G	2/year
Bis(2-ethylhexyl)phthalate	µg/L	G	2/year
Total Ammonia	mg/L as N	C-24	1/month
Remaining Priority Pollutants	µg/L	(7)	2/year

Footnotes to Table E-4:

Unit Abbreviations:

MG	=	million gallons
MGD	=	million gallons per day
s.u.	=	standard units
TUc	=	Chronic Toxicity Units
^{o}C	=	degrees Celsius
mg/L	=	milligrams per liter
kg/d	=	kilograms per day
CFU/100mL	=	colony forming units per 100 milliliters

Sample Type Abbreviations:

Cont	=	measured continuously
Cont/D	=	measured continuously, and recorded and reported daily
Cont/H	=	measured continuously, and recorded and reported hourly
C-24	=	24-hour composite
G	=	Grab

[1] Flow Monitoring:

For effluent flows, the following information shall also be reported monthly:
Daily: Total Daily Flow Volume (MG)
Monthly: Monthly Average Flow (MGD)
Monthly: Maximum Daily Flow (MGD)
Monthly: Minimum Daily Flow (MGD)
Monthly: Total Flow Volume (MG)

[2] If pH is monitored continuously, the minimum and maximum pH values for each day shall be reported in monthly Self-Monitoring Reports (SMRs).

[3] Effluent chlorine concentrations shall be monitored continuously. Chlorine residual concentrations shall be monitored and reported for sampling points both before and after dechlorination. The discharger shall report the maximum residual chlorine concentration observed following dechlorination on a daily basis. Total chlorine dosage (kg/day) shall be recorded on a daily basis.

Instead, the Discharger may evaluate compliance with this requirement be recording discrete readings from continuous monitoring equipment every hour on the hour or by collecting grab samples every hour, for a total of 24 readings or sample per day, if the following conditions are met: (1) The Discharger shall retain continuous monitoring readings for at least three years; (2) The Discharger shall acknowledge in writing that the Regional Water Board reserves the right to use all other continuous monitoring data for discretionary enforcement; (3) The

Discharger must provide in writing the brand names(s), model number(s), and serial number(s) of the equipment used to continuously monitor dechlorinated final effluent chlorine residual. If the identified equipment is replaced, the Discharger shall provide the Regional Water Board in writing, within72 hours of the successful startup of the new equipment, the new equipment's brand name, model number, and serial number. The written notification identified in items 1 through 3 shall be in the form of a letter addressed to the Regional Water Board's Executive Officer with a certification statement as listed in the October 19, 2004 Regional Water Board letter re: Chlorine Compliance Strategy for Dischargers Using Continuous Monitoring Devices.

[4] Each oil and grease sampling event shall consist of a composite sample comprised of three grab samples taken at equal intervals during the sampling date, with each grab sample being collected in a glass container. The grab samples shall be mixed in proportion to the instantaneous flow rates occurring at the time of each sample, within the accuracy of plus or minus 5%. Each glass container used for sample collection or mixing shall be thoroughly rinsed with solvent rinsings as soon as possible after use, and the solvent rinsings shall be added to the composite sample for extraction and analysis.

[5] Acute bioassay tests shall be performed in accordance with Section V.A of this MRP.

[6] Critical Life Stage Toxicity Test shall be performed and reported in accordance with the Chronic Toxicity Requirements specified in Section V.B of this MRP.

[7] The sample type and analytical method should be as described in the August 6, 2001, letter (Attachment G.)

V. WHOLE EFFLUENT TOXICITY TESTING REQUIREMENTS

The Discharger shall monitor acute and chronic toxicity at EFF-002 as follows.

A. Whole Effluent Acute Toxicity

1. Compliance with the acute toxicity effluent limitations of this Order shall be evaluated by measuring survival of test organisms exposed to 96-hour continuous flow-through bioassays.

2. Test organisms shall be fathead minnow or rainbow trout unless specified otherwise in writing by the Executive Officer.

3. All bioassays shall be performed according to the most up-to-date protocols in 40 CFR 136, currently in *Methods for Measuring the Acute Toxicity of Effluents and Receiving Water to Freshwater and Marine Organisms,* 5th Edition.

4. If specific identifiable substances in the discharge can be demonstrated by the Discharger as being rapidly rendered harmless upon discharge to the receiving water, the Discharger may demonstrate compliance with the acute toxicity limits after the test samples are adjusted to remove the influence of those substances. The Discharger has permission to adjust the effluent pH prior to initiating a flow-through bioassay. Written approval from the Executive Officer must be obtained to authorize additional adjustments.

5. Effluent used for fish bioassays must be dechlorinated prior to testing. Monitoring of the bioassay water shall include, on a daily basis, the following parameters: pH, dissolved oxygen, ammonia (if toxicity is observed), temperature, hardness, and alkalinity. These results shall be recorded and maintained with all other analytical documents. If a violation of acute toxicity requirements occurs or if the control fish survival rate is less than 90 percent, the bioassay test shall be restarted with new batches of fish. Bioassay tests shall continue back-to-back until compliance is demonstrated.

B. Whole Effluent Chronic Toxicity

1. Chronic Toxicity Monitoring Requirements

   a. *Sampling*. The Discharger shall collect 24-hour composite samples of the effluent at the compliance point specified in Table E-4 above for critical life stage toxicity testing. For toxicity tests requiring renewals, 24-hour composite samples collected on consecutive days are required.

   b. *Test Species*. The test species shall be *Ceriodaphnia dubia.* The Executive Officer may change to another test species if data suggest that another test species is more sensitive to the discharge.

   c. *Methodology*. Sample collection, handling and preservation shall be in accordance with USEPA protocols. In addition, bioassays shall be conducted in compliance with the most recently promulgated test methods, as shown in **Appendix E-1.** These are *Short-Term Methods for Estimating the Chronic Toxicity of Effluents and Receiving Waters to Marine and Estuarine Organisms,* currently third edition (EPA-821-R-02-014), and *Short-term Methods for Estimating the Chronic Toxicity of Effluents and Receiving Waters to Freshwater Organisms,* currently fourth Edition (EPA-821-R-02-013), with exceptions granted by the Executive Officer and the Environmental Laboratory Accreditation Program (ELAP).

   d. *Dilution Series.* The Discharger shall conduct tests at 40%, 20%, 10%, 5% and 2%. The "%" represents percent effluent as discharged. The Discharger may use a buffer only after obtaining written approval from the Executive Officer.

2. Chronic Toxicity Reporting Requirements

   a. *Routine Reporting*. Toxicity test results for the current reporting period shall include, at a minimum, for each test:

      (1) Sample date(s)

      (2) Test initiation date

      (3) Test species

      (4) End point values for each dilution (e.g., number of young, growth rate, percent survival)

      (5) No Observed Effect Concentration (NOEC) value(s) in percent effluent

      (6) Inhibition Concentration (IC) values at IC_{15}, IC_{25}, IC_{40}, and IC_{50} (or Effective Concentration (EC) values at EC_{15}, EC_{25} ... etc.) as percent effluent

      (7) Chronic Toxicity Units (TUc) values (100/NOEC, $100/IC_{25}$, or $100/EC_{25}$)

(8) Mean percent mortality (±s.d.) after 96 hours in 100% effluent (if applicable)

(9) NOEC and Lowest Observed Effect Concentration (LOEC) values for reference toxicant test(s)

(10) IC_{50} or EC_{50} value(s) for reference toxicant test(s)

(11) Available water quality measurements for each test (pH, dissolved oxygen [DO], temperature, conductivity, hardness, salinity, ammonia)

b. *Compliance Summary*. The results of the chronic toxicity testing shall be provided in the Self-Monitoring Report (SMR) and shall include a summary table of chronic toxicity data from at least eleven of the most recent samples. The information in the table shall include items listed above under 2.a, specifically item numbers (1), (3), (5), (6) (IC_{25} or EC_{25}), (7), and (8).

3. Chronic Toxicity Reduction Evaluation (TRE)

a. *Prepare Generic TRE Work Plan.* To be ready to respond to toxicity events, the Discharger shall prepare a generic TRE work plan within 90 days of the effective date of this Order. The Discharger shall review and update the work plan as necessary to remain current and applicable to the discharge and discharge facilities.

b. *Submit Specific TRE Work Plan.* Within 30 days of exceeding the trigger for accelerated monitoring, the Discharger shall submit to the Regional Water Board a TRE work plan, which should be the generic work plan revised as appropriate for this toxicity event after consideration of available discharge data.

c. *Initiate TRE.* Within 30 days of the date of completion of the accelerated monitoring tests observed to exceed either trigger, the Discharger shall initiate a TRE in accordance with a TRE work plan that incorporates any and all comments from the Executive Officer.

d. The TRE shall be specific to the discharge and be prepared in accordance with current technical guidance and reference materials, including USEPA guidance materials. The TRE shall be conducted as a tiered evaluation process, such as summarized below:

(1) Tier 1 consists of basic data collection (routine and accelerated monitoring).

(2) Tier 2 consists of evaluation of optimization of the treatment process, including operation practices and in-Plant process chemicals.

(3) Tier 3 consists of a toxicity identification evaluation (TIE).

(4) Tier 4 consists of evaluation of options for additional effluent treatment processes.

(5) Tier 5 consists of evaluation of options for modifications of in-Plant treatment processes.

(6) Tier 6 consists of implementation of selected toxicity control measures, and follow-up monitoring and confirmation of implementation success.

e. The TRE may be ended at any stage if monitoring finds there is no longer consistent toxicity (complying with requirements of Section IV.A.4 of this Order).

f. The objective of the TIE shall be to identify the substance or combination of substances causing the observed toxicity. All reasonable efforts using currently available TIE methodologies shall be employed.

g. As toxic substances are identified or characterized, the Discharger shall continue the TRE by determining the source(s) and evaluating alternative strategies for reducing or eliminating the substances from the discharge. All reasonable steps shall be taken to reduce toxicity to levels consistent with chronic toxicity evaluation parameters.

h. Many recommended TRE elements parallel required or recommended efforts of source control, pollution prevention and storm water control programs. TRE efforts should be coordinated with such efforts. To prevent duplication of efforts, evidence of complying with requirements or recommended efforts of such programs may be acceptable to comply with TRE requirements.

i. The Regional Water Board recognizes that chronic toxicity may be episodic and identification of causes of and reduction of sources of chronic toxicity may not be successful in all cases. Consideration of enforcement action by the Regional Water Board will be based in part on the Discharger's actions and efforts to identify and control or reduce sources of consistent toxicity.

VI. LAND DISCHARGE MONITORING REQUIREMENTS

Not Applicable.

VII. RECLAMATION MONITORING REQUIREMENTS

Not Applicable.

VIII. RECEIVING WATER MONITORING REQUIREMENTS

The Discharger shall continue to participate in the Regional Monitoring Program (RMP), which involves collection of data on pollutants and toxicity in water, sediment and biota of the Estuary. The Discharger's participation and support of the RMP is used in consideration of the level of receiving water monitoring required by this Order. The Discharger shall also monitor its receiving from RSW-001, RSW-002-A, and RSW-002-B as follows:

Table E-5. Receiving Water Monitoring

Parameter	Units	Sample Type	Minimum Sampling Frequency
pH	s.u.	G	1/quarter
Temperature	^{o}C	G	1/quarter
Dissolved oxygen	mg/L	G	1/quarter
Total and dissolved sulfides [1]	mg/L	G	1/quarter
Unionized Ammonia	mg/L	G	1/quarter

Footnotes to Table E-5:

[1] The analysis for sulfides should be conducted when the dissolved oxygen concentration of the receiving water is less than 5.0 mg/L.

Abbreviations:

s.u.	=	standard units
^{o}C	=	degrees Celsius
mg/L	=	milligrams per liter
µg/L	=	micrograms per liter
G	=	Grab

IX. OTHER MONITORING REQUIREMENTS

A. Pretreatment Requirements

The Discharger shall comply with the pretreatment requirements specified in Table E-6 for influent (INF-001), effluent (EFF-002), and biosolids.

Table E-6. Pretreatment Monitoring Requirements [1]

Constituents	Location and Frequency			Required Test Methods
	Influent (INF-001)	Effluent (EFF-002)	Biosolids	
VOCs [2]	2/Y	2/Y	2/Y	624
BNA [3]	2/Y	2/Y	2/Y	625
Metals [4]	M	M	2/Y	(5)

Footnotes to Table E-6:

[1] Influent and effluent monitoring conducted in accordance with Tables E-3 and E-4 can be used to satisfy these pretreatment monitoring requirements.

[2] Volatile organic compounds.

[3] Base neutral, acid extractable compounds.

[4] Analyses for metals shall include arsenic, cadmium, chromium, copper, lead, mercury, nickel, silver, zinc, selenium and cyanide.

[5] Same USEPA method used to determine compliance with this Order.

B. Biosolids Monitoring

The Discharger shall adhere to sludge monitoring requirements required by 40 CFR 503.

X. MODIFICATIONS TO PART A OF SELF-MONITORING PROGRAM (ATTACHMENT G)

A. If any discrepancies exist between SMP Part A, August 1993 (Attachment G) and this MRP, this MRP prevails.

1. Modifications to Section F.4 of Part A:

   [Add the following to the beginning of the first paragraph.]

   For each calendar month, a self-monitoring report (SMR) shall be submitted to the Regional Water Board in accordance with the following the requirements listed in Self-Monitoring Program, Part A. The purpose of this report is to document treatment performance, effluent quality and compliance with waste discharge requirements prescribed by this Order, as demonstrated by the monitoring program data and the Discharger's operation practices.

[And add at the end of Section F.4 the following:]

g. If the Discharger wishes to invalidate any measurement, the letter of transmittal will include identification of the measurement suspected to be invalid and notification of intent to submit, within 60 days, a formal request to invalidate the measurement, the original measurement in question, the reason for invalidating the measurement, all relevant documentation that supports the invalidation (e.g., laboratory sheet, log entry, test results, etc.), and discussion of the corrective actions taken or planned (with a time schedule for completion), to prevent recurrence of the sampling or measurement problem.

h. Reporting Data in Electronic Format

The Discharger has the option to submit all monitoring results in an electronic reporting format approved by the Executive Officer. If the Discharger chooses to submit SMRs electronically, the following shall apply:

1) Reporting Method: The Discharger shall submit SMRs electronically via the process approved by the Executive Officer in a letter dated December 17, 1999, Official Implementation of Electronic Reporting System (ERS) and in the Progress Report letter dated December 17, 2000, or in a subsequently approved format that the Permit has been modified to include.

2) Monthly or Quarterly Reporting Requirements: For each reporting period (monthly or quarterly as specified in SMP Part B), an electronic SMR shall be submitted to the Regional Water Board in accordance with Section F.4.a-g. above. However, until U.S. EPA approves the electronic signature or other signature technologies, Dischargers that are using the ERS must submit a hard copy of the original transmittal letter, an ERS printout of the data sheet, a violation report, and a receipt of the electronic transmittal.

3) Annual Reporting Requirements: Dischargers who have submitted data using the ERS for at least one calendar year are exempt from submitting an annual report electronically, but a hard copy of the annual report <u>per Sections F.5.b, F.5.c, and F.5.d below</u> shall be submitted.

2. Section F.5, Annual Reporting:

[Add the following at the end of this section.]

d. A plan view drawing or map showing the Discharger's facility, flow routing and sampling and observation station locations.

3. Section C.2.b. of Part A:

[Modify to read]

2. Effluent
   b. Grab samples of effluent shall be collected during period of maximum peak <u>influent</u> flows and shall coincide with effluent composite sample days.

4. Section C.1. of Part A:

   [Modify to read]

   1. Influent
      Composite samples of influent shall be collected on varying days selected at random and shall not include any plant recirculation or other side stream wastes, unless the flows originate from the Recycled Water Facility. Deviation from this must be approved by the Executive Officer.

XI. REPORTING REQUIREMENTS

A. General Monitoring and Reporting Requirements

The Discharger shall comply with all Standard Provisions (Attachment D) related to monitoring, reporting, and recordkeeping.

B. Self Monitoring Reports

1. At any time during the term of this Order, the State or Regional Water Board may notify the Discharger to electronically submit SMRs using the State Water Board's California Integrated Water Quality System (CIWQS) Program Web site (http://www.waterboards.ca.gov/ciwqs/index.html). Until such notification is given, the Discharger shall submit hard copy SMRs. The CIWQS Web site will provide additional directions for SMR submittal in the event there will be service interruption for electronic submittal.

2. The Discharger shall submit monthly and annual SMRs including the results of all required monitoring using USEPA-approved test methods or other test methods specified in this Order for each calendar month. If the Discharger monitors any pollutant more frequently than required by this Order, the results of this monitoring shall be included in the calculations and reporting of the data submitted in the SMR. Monthly SMRs shall be due on the 30th day following the end of each calendar month, covering samples collected during that calendar month; Annual Reports shall be due on February 1 following each calendar year.

3. Monitoring periods and reporting for all required monitoring shall be completed according to the following schedule:

Table E-7. Monitoring Periods and Reporting Schedule

Sampling Frequency	Monitoring Period Begins On…	Monitoring Period
Continuous	Day after permit effective date	All
Hourly	Day after permit effective date	Hourly
Daily	Day after permit effective date	Midnight through 11:59 PM or any 24-hour period that reasonably represents a calendar day for purposes of sampling.

Sampling Frequency	Monitoring Period Begins On…	Monitoring Period
Weekly	Sunday following permit effective date or on permit effective date if on a Sunday	Sunday through Saturday
Monthly	First day of calendar month following permit effective date or on permit effective date if that date is first day of the month	1st day of calendar month through last day of calendar month
Quarterly	Closest of January 1, April 1, July 1, or October 1 following (or on) permit effective date	January 1 through March 31 April 1 through June 30 July 1 through September 30 October 1 through December 31
Semiannually	Closest of January 1 or July 1 following (or on) permit effective date	January 1 through June 30 July 1 through December 31
Annually	January 1 following (or on) permit effective date	January 1 through December 31
Per Discharge Event	Anytime during the discharge event or as soon as possible after aware of the event	At a time when sampling can characterize the discharge event

4. Reporting Protocols. The Discharger shall report with each sample result the applicable Reporting Level (RL) and the current Method Detection Limit (MDL), as determined by the procedure in 40 CFR 136.

   The Discharger shall report the results of analytical determinations for the presence of chemical constituents in a sample using the following reporting protocols:

   a. Sample results greater than or equal to the RL shall be reported as measured by the laboratory (i.e., the measured chemical concentration in the sample).

   b. Sample results less than the RL, but greater than or equal to the laboratory's MDL, shall be reported as "Detected, but Not Quantified," or DNQ. The estimated chemical concentration of the sample shall also be reported.

      For the purposes of data collection, the laboratory shall write the estimated chemical concentration next to DNQ as well as the words "Estimated Concentration" (may be shortened to "Est. Conc."). The laboratory may, if such information is available, include numerical estimates of the data quality for the reported result. Numerical estimates of data quality may be percent accuracy ($\pm$ a percentage of the reported value), numerical ranges (low to high), or any other means considered appropriate by the laboratory.

   c. Sample results less than the laboratory's MDL shall be reported as "Not Detected," or ND.

   d. Dischargers are to instruct laboratories to establish calibration standards so that the ML value (or its equivalent if there is differential treatment of samples relative to calibration standards) is the lowest calibration standard. At no time is the Discharger to use analytical data derived from *extrapolation* beyond the lowest point of the calibration curve.

5. The Discharger shall submit SMRs in accordance with the following requirements:

   a. The Discharger shall arrange all reported data in a tabular format. The data shall be summarized to clearly illustrate whether the facility is operating in compliance with interim and/or final effluent limitations. The Discharger is not required to duplicate the submittal of data that is entered in a tabular format within CIWQS. When electronic submittal of data is required and CIWQS does not provide for entry into a tabular format within the system, the Discharger shall electronically submit the data in a tabular format as an attachment.

   b. The Discharger shall attach a cover letter to the SMR. The information contained in the cover letter shall clearly identify violations of the WDRs; discuss corrective actions taken or planned; and the proposed time schedule for corrective actions. Identified violations must include a description of the requirement that was violated and a description of the violation.

   c. SMRs must be submitted to the Regional Water Board, signed and certified as required by the Standard Provisions (Attachment D), to the address listed below:

      Executive Officer
      California Regional Water Quality Control Board
      San Francisco Bay Region
      1515 Clay Street, Suite 1400
      Oakland, CA 94612
      ATTN: NPDES Permit Division

C. Discharge Monitoring Reports

1. As described in Section XII.B.1 above, at any time during the term of this Order, the State or Regional Water Board may notify the Discharger to electronically submit SMRs that will satisfy federal requirements for submittal of Discharge Monitoring Reports (DMRs). Until such notification is given, the Discharger shall submit DMRs in accordance with the requirements described below.

2. DMRs must be signed and certified as required by the standard provisions (Attachment D). The Discharge shall submit the original DMR and one copy of the DMR to one of the addresses listed below:

Standard Mail	FedEx/UPS/Other Private Carriers
State Water Resources Control Board Division of Water Quality c/o DMR Processing Center PO Box 100 Sacramento, CA 95812-1000	State Water Resources Control Board Division of Water Quality c/o DMR Processing Center 1001 I Street, 15th Floor Sacramento, CA 95814

3. All discharge monitoring results must be reported on the official USEPA pre-printed DMR forms (EPA Form 3320-1). Forms that are self-generated will not be accepted unless they follow the exact same format of EPA Form 3320-1.

D. Other Reports

The Discharger shall report the results of any special studies, monitoring, and reporting required by Section VI.C.2 (Special Studies, Technical Reports, and Additional Monitoring Requirements) of this Order with the first monthly SMR following the respective due date. The Discharger shall include a report of progress towards meeting compliance schedules established by section VI.C.6 of this Order in the annual SMR.

APPENDIX E-1
CHRONIC TOXICITY
DEFINITION OF TERMS AND SCREENING PHASE REQUIREMENTS

I. Definition of Terms

A. No observed effect level (NOEL) for compliance determination is equal to IC_{25} or EC_{25}. If the IC_{25} or EC_{25} cannot be statistically determined, the NOEL shall be equal to the NOEC derived using hypothesis testing.

B. Effective concentration (EC) is a point estimate of the toxicant concentration that would cause an adverse effect on a quantal, "all or nothing," response (such as death, immobilization, or serious incapacitation) in a given percent of the test organisms. If the effect is death or immobility, the term lethal concentration (LC) may be used. EC values may be calculated using point estimation techniques such as probit, logit, and Spearman-Karber. EC_{25} is the concentration of toxicant (in percent effluent) that causes a response in 25 percent of the test organisms.

C. Inhibition concentration (IC) is a point estimate of the toxicant concentration that would cause a given percent reduction in a nonlethal, nonquantal biological measurement, such as growth. For example, an IC_{25} is the estimated concentration of toxicant that would cause a 25 percent reduction in average young per female or growth. IC values may be calculated using a linear interpolation method such as USEPA's Bootstrap Procedure.

D. No observed effect concentration (NOEC) is the highest tested concentration of an effluent or a toxicant at which no adverse effects are observed on the aquatic test organisms at a specific time of observation. It is determined using hypothesis testing.

II. Chronic Toxicity Screening Phase Requirements

A. The Discharger shall perform screening phase monitoring:

1. Subsequent to any significant change in the nature of the effluent discharged through changes in sources or treatment, except those changes resulting from reductions in pollutant concentrations attributable to source control efforts, or

2. Prior to permit reissuance. Screening phase monitoring data shall be included in the NPDES permit application for reissuance. The information shall be as recent as possible, but may be based on screening phase monitoring conducted within 5 years before the permit expiration date.

B. Design of the screening phase shall, at a minimum, consist of the following elements:

1. Use of test species specified in **Appendix E-2**, attached, and use of the protocols referenced in those tables.

2. Two stages:

a. Stage 1 shall consist of a minimum of one battery of tests conducted concurrently. Selection of the type of test species and minimum number of tests shall be based on **Appendix E-2** (attached).

b. Stage 2 shall consist of a minimum of two test batteries conducted at a monthly frequency using the three most sensitive species based on the Stage 1 test results.

3. Appropriate controls.

4. Concurrent reference toxicant tests.

5. Dilution series of 2%, 5%, 10%, 20%, and 40%, where "%" is percent effluent as discharged.

C. The Discharger shall submit a screening phase proposal acceptable to the Executive Officer. The proposal shall address each of the elements listed above. If within 30 days, the Executive Officer does not comment, the Discharge shall commence with screening phase monitoring.

APPENDIX E-2
SUMMARY OF TOXICITY TEST SPECIES REQUIREMENTS

Critical Life Stage Toxicity Tests for Estuarine Waters

Species	(Scientific Name)	Effect	Test Duration	Reference
Alga	*(Skeletonema costatum)* *(Thalassiosira pseudonana)*	Growth rate	4 days	1
Red alga	*(Champia parvula)*	Number of cystocarps	7–9 days	3
Giant kelp	*(Macrocystis pyrifera)*	Percent germination; germ tube length	48 hours	2
Abalone	*(Haliotis rufescens)*	Abnormal shell development	48 hours	2
Oyster Mussel	*(Crassostrea gigas)* *(Mytilus edulis)*	Abnormal shell development; percent survival	48 hours	2
Echinoderms - Urchins Sand dollar	*(Strongylocentrotus purpuratus, S. franciscanus)* *(Dendraster excentricus)*	Percent fertilization	1 hour	2
Shrimp	*(Mysidopsis bahia)*	Percent survival; growth	7 days	3
Shrimp	*(Holmesimysis costata)*	Percent survival; growth	7 days	2
Topsmelt	*(Atherinops affinis)*	Percent survival; growth	7 days	2
Silversides	*(Menidia beryllina)*	Larval growth rate; percent survival	7 days	3

Toxicity Test References:

1. American Society for Testing Materials (ASTM). 1990. Standard Guide for Conducting Static 96-Hour Toxicity Tests with Microalgae. Procedure E 1218-90. ASTM, Philadelphia, PA.
2. Short-term Methods for Estimating the Chronic Toxicity of Effluent and Receiving Waters to West Coast Marine and Estuarine Organisms. EPA/600/R-95/136. August 1995.
3. Short-term Methods for Estimating the Chronic Toxicity of Effluent and Receiving Waters to Marine and Estuarine Organisms. EPA/600/4-90/003. July 1994.

Critical Life Stage Toxicity Tests for Fresh Waters

Species	(Scientific Name)	Effect	Test Duration	Reference
Fathead minnow	*(Pimephales promelas)*	Survival; growth rate	7 days	4
Water flea	*(Ceriodaphnia dubia)*	Survival; number of young	7 days	4
Alga	*(Selenastrum capricornutum)*	Cell division rate	4 days	4

Toxicity Test Reference:

4. Short-term Methods for Estimating the Chronic Toxicity of Effluents and Receiving Waters to Freshwater Organisms, third edition. EPA/600/4-91/002. July 1994.

Toxicity Test Requirements for Stage One Screening Phase

Requirements	Receiving Water Characteristics		
	Discharges to Coast	Discharges to San Francisco Bay[2]	
	Ocean	Marine/Estuarine	Freshwater
Taxonomic diversity	1 Plant 1 invertebrate 1 fish	1 Plant 1 invertebrate 1 fish	1 Plant 1 invertebrate 1 fish
Number of tests of each salinity type: Freshwater[1] Marine/Estuarine	0 4	1 or 2 3 or 4	3 0
Total number of tests	4	5	3

[1] The freshwater species may be substituted with marine species if:

(a) The salinity of the effluent is above 1 part per thousand (ppt) greater than 95 percent of the time, or

(b) The ionic strength (TDS or conductivity) of the effluent at the test concentration used to determine compliance is documented to be toxic to the test species.

[2] (a) Marine/Estuarine refers to receiving water salinities greater than 1 ppt at least 95 percent of the time during a normal water year.

(b) Fresh refers to receiving water with salinities less than 1 ppt at least 95 percent of the time during a normal water year.

ATTACHMENT F - FACT SHEET

Table of Contents

I. Permit Information F-3
II. Facility Description F-4
  A. Description of Wastewater Treatment F-4
  B. Discharge Point and Receiving Water F-5
  C. Summary of Existing Requirements and Self-Monitoring Report Data F-5
  D. Compliance Summary F-7
  E. Planned Changes F-7
III. Applicable Plans, Policies, and Regulations F-8
  A. Legal Authorities F-8
  B. California Environmental Quality Act (CEQA) F-8
  C. State and Federal Regulations, Policies, and Plans F-8
  D. Impaired Water Bodies on CWA 303(d) List F-10
IV. Rationale For Effluent Limitations and Discharge Specifications F-10
  A. Discharge Prohibitions F-11
  B. Effluent Limitations for Conventional and Non-Conventional Pollutants F-11
    1. Scope and Authority F-11
    2. Applicable Effluent Limitations F-12
  C. Effluent Limitations for Toxic Pollutants F-13
    1. Scope and Authority F-13
    2. Applicable Beneficial Uses and Water Quality Criteria and Objectives F-14
    3. Determining the Need for WQBELs F-15
    4. WQBEL Calculations. F-21
    5. Whole Effluent Acute Toxicity F-34
  E. Land Discharge Specifications F-36
  F. Reclamation Specifications F-36
V. Rationale for Receiving Water Limitations F-37
VI. RationalE for Monitoring and Reporting Requirements F-37
  A. Influent Monitoring F-37
  B. Effluent Monitoring F-37
  C. Receiving Water Monitoring F-38
  D. Other Monitoring Requirements F-38
VII. Rationale for Provisions F-38
  A. Standard Provisions (Provision VI.A) F-38
  B. Monitoring and Reporting Requirements (Provision VI.B) F-38
  C. Special Provisions (Provision VI.C) F-39
    1. Reopener Provisions F-39
    2. Special Studies and Additional Monitoring Requirements F-39
    3. Best Management Practices and Pollution Minimization Program F-39
    4. Construction, Operation, and Maintenance Specifications F-39
    5. Special Provisions for Municipal Facilities (POTWs Only) F-40
    6. Compliance Schedule F-40
    7. Copper Action Plan F-40
    8. Cyanide Action Plan F-41
    9. Plant Expansion F-41

VIII. Public Participation F-41
A. Notification of Interested Parties F-41
B. Written Comments F-41
C. Public Hearing F-41
D. Waste Discharge Requirements Petitions F-42
E. Information and Copying F-42
F. Register of Interested Persons F-42
G. Additional Information F-42

List of Tables

Table F-1. Facility Information F-3
Table F-2. Outfall Location F-5
Table F-3. Effluent Limitations (Order No. R2-2003-0114, as amended by Order No. R2-2004-027) and Monitoring Data for Conventional and Non-Conventional Pollutants F-6
Table F-4. Effluent Limitations (Order No. R2-2003-0114, as amended by Order No. R2-2004-027) and Monitoring Data for Toxic Pollutants F-6
Table F-5. Compliance with Previous Order Provisions F-7
Table F-6. Beneficial Uses of New York Slough F-8
Table F-7. Secondary Treatment Requirements F-12
Table F-8. Summary of Effluent Limitations for Conventional and Non-conventional Pollutants F-12
Table F-9. Reasonable Potential Analysis Summary F-17
Table F-10a. Effluent Limit Calculations for Copper, Selenium, Cyanide, Dioxin-TEQ, and Bromoform. F-31
Table F-10b. Effluent Limit Calculations for Chlorodibromomethane, Methylene Chloride, Bis(2-ethylhexyl)phthalate, and Total Ammonia. F-32

ATTACHMENT F – FACT SHEET

As described in Section II of this Order, this Fact Sheet includes the legal requirements and technical rationale that serve as the basis for the requirements of this Order.

This Order has been prepared under a standardized format to accommodate a broad range of discharge requirements for dischargers in California. Only those sections or subsections of this Order that are specifically identified as "not applicable" have been determined not to apply to this Discharger. Sections or subsections of this Order not specifically identified as "not applicable" fully apply to this Discharger.

I. PERMIT INFORMATION

The following table summarizes administrative information related to the Delta Diablo Sanitation District Wastewater Treatment Plant.

Table F-1. Facility Information

WDID	2 071013001
Discharger	Delta Diablo Sanitation District
Name of Facility	Delta Diablo Wastewater Treatment Plant and its collection system
Facility Address	2500 Pittsburg-Antioch Highway
	Antioch, CA 94509
	Contra Costa County
Facility Contact, Title, Phone	Gary Darling, General Manager, (925) 756-1920
Authorized Person to Sign and Submit Reports	Steve Dominguez, Plant Manager, (925) 756-1967
Mailing Address	Same as Facility Address
Billing Address	Same as Facility Address
Type of Facility	Publicly Owned Treatment Works (POTW)
Major or Minor Facility	Major
Threat to Water Quality	1
Complexity	A
Pretreatment Program	Yes
Facility Permitted Flow	16.5 million gallons per day (MGD) average dry weather flow
Facility Design Flow	16.5 MGD (average dry weather treatment capacity) 26.0 MGD (peak wet weather treatment capacity) 22.7 MGD (average dry weather capacity subject to conditions in Provision VI.C.9) 35.8 MGD (future peak wet weather capacity subject to conditions in Provision VI.C.9)
Watershed	Suisun Basin
Receiving Water	New York Slough
Receiving Water Type	Estuarine
Service Areas	Cities of Antioch and Pittsburg (and surrounding area)
Service Area Population	189,000

A. The Delta Diablo Sanitation District owns and operates the Delta Diablo Sanitation District Wastewater Treatment Plant (Plant) and some of its associated collection system. The facility provides secondary treatment of the wastewater collected from its service areas and discharges to New York Slough. For the purposes of this Order, references to the "discharger" or "permittee" in applicable federal and state laws, regulations, plans, or policy are held to be equivalent to references to the Discharger herein.

B. The discharge of treated wastewater from the Plant to New York Slough, a water of the United States, is currently regulated by Order No. R2-2003-0114 (NPDES Permit No. CA0038547), which was adopted on December 3, 2003, became effective on February 1, 2004, and was amended by Order No. R2-2004-027. The previous permit expired on January 1, 2009.

C. The Discharger filed a Report of Waste Discharge and submitted an application for renewal of its WDRs and NPDES permit on June 30, 2008. The application was deemed complete, and the previous Order has been administratively extended.

II. FACILITY DESCRIPTION

A. Description of Wastewater Treatment

The Discharger provides secondary treatment of wastewater from domestic, commercial and industrial sources from the Cities of Antioch and Pittsburg and the unincorporated community of Bay Point. The current total service population is approximately 189,000 (2008 estimate). The Plant has an average dry weather design treatment capacity of 16.5 MGD, and can treat up to 26.0 MGD during wet weather. The average daily discharge rate was 9.5 MGD based on flow data from 2004-2008. During that period, the highest maximum daily effluent flow rate was 19.7 MGD.

The Discharger provides wastewater collection services for the unincorporated community of Bay Point, and conveyance services for Bay Point, Antioch and Pittsburg. The cities of Antioch and Pittsburg own, operate and maintain about 720 km of satellite collection systems that feed into the Discharger's conveyance system. The Discharger owns and operates about 115 km of sewer lines, five flow equalization storage facilities, and six pump stations.

Wastewater treatment processes at the facility include screening and grit removal, primary clarification, biological treatment with trickling towers and/or aeration basins, secondary clarification, disinfection (sodium hypochlorite), and dechlorination (sodium bisulfite). Peak wet weather flows are managed with a 2.2 million gallon (MG) flow equalization tank, a 1 MG equalization basin, and a 12.8 MG emergency retention pond, in addition to approximately 4 MG of storage in collection system pump stations. All influent flows receive primary treatment. During periods of exceptionally high flows, primary-treated flows in excess of the trickling tower capacity are diverted to the storage basins and returned to the trickling towers for secondary treatment once influent flow subsides.

About half of the secondary-treated wastewater undergoes tertiary treatment at the Discharger's Recycled Water Facility. Most of this water is used for cooling water makeup at the Delta and Los Medanos Energy Centers, with a small amount (less than 1%) used for irrigation at local parks. The power plants return approximately 2 MGD of cooling tower blowdown to the Plant, where it combines with secondary-treated wastewater and is chlorinated and dechlorinated prior to discharge.

The Discharger has received requests for additional recycled water (new irrigation sites and power plants). In response, the Discharger plans to recycle more of its secondary effluent and possibly obtain recycled water from outside its service area. The Discharger is also considering use of its outfall for disposal of a potential brine discharge from a reverse osmosis desalination plant. If all of these projects are implemented, the total discharge through Outfall 001 could be up to 23.4 MGD (average annual flow). The Discharger must first complete Plant improvements to accommodate the increased flow. These improvements are scheduled to be complete in 2013.

Biosolids are anaerobically digested, concentrated using a gravity belt and dewatered by centrifuge. Biosolids are placed in the Vasco Road Landfill or the Potrero Hills Landfill, as alternative daily cover, or it is land applied.

The Discharger is not required to be covered under the State Water Board's statewide NPDES permit for storm water discharges associated with industrial activities (NPDES General Permit CAS000001) because all of the storm water captured within the Plant storm drain system is contained in the Discharger's emergency retention basin and is directed to the trickling tower pump station of the Plant and treated to the standards contained in this Order. The storm water drain system is also used to collect minor flows from the Recycled Water Facility generated from the pH meter, the seal to the sand filter, and cleaning waters from the mud valve. These flows do not exceed 1000 gallons per day and are returned to the trickling tower pump station for treatment.

B. Discharge Point and Receiving Water

The receiving water and the location of the Plant discharge point are shown in Table F-2 below.

Table F-2. Outfall Location

Discharge Point	Effluent Description	Discharge Point Latitude	Discharge Point Longitude	Receiving Water
001	Secondary treated municipal wastewater	38º 01' 40" N	121º 50' 14" W	New York Slough

New York Slough is located in Sacramento-San Joaquin Delta, which is in the Suisun Basin identified in the Basin Plan.

C. Summary of Existing Requirements and Self-Monitoring Report Data

Effluent limitations of the previous Order (Order No. R2-2003-0114, as amended by Order No. R2-2004-027) for discharges to New York Slough and representative monitoring data from the term of the previous permit are as follows:

Table F-3. Effluent Limitations (Order No. R2-2003-0114, as amended by Order No. R2-2004-027) and Monitoring Data for Conventional and Non-Conventional Pollutants

Parameter	Units	Effluent Limitations			Monitoring Data (From February 2004 to July 2008)		
		Monthly Average	Weekly Average	Daily Maximum	Highest Monthly Average	Highest Weekly Average	Highest Daily Discharge
Biochemical Oxygen Demand (BOD)	mg/L	30	45	---	17.46	---	---
Total Suspended Solids (TSS)	mg/L	30	45	---	17.61	21.84	---
pH	standard units	6.0 – 9.0			Minimum – 6.9 Maximum – 7.8		
Oil and Grease	mg/L	10	---	20	9 (J)		9(J)
Total Coliform Bacteria	MPN/100 mL	(1)			(2)		
Chlorine, Total Residual (TRC)	mg/L	---	---	0.0 (3)	---	---	0
Settleable Matter	mL/L-hr	0.1	---	0.2	<0.1	---	<0.1

Footnotes to Table F-3:

Unit Abbreviations

mg/L = milligrams per liter
mL/L-hr = milliliters per liter per hour
MPN/100 mL = Most Probable Number per 100 milliliters
ND = Non-Detect
NA = Not Applicable
J = Detected, Not Quantified

[1] The five-sample moving median value not to exceed 23 MPN/100mL, and no single sample not exceed to 500 MPN/100 mL.
[2] The highest single sample reported was 145 MPN/100mL, and the highest five sample median reported was 13 MPN/100 mL.
[3] For TRC, 0.0 mg/L was established as an instantaneous maximum effluent limitation.

Table F-4. Effluent Limitations (Order No. R2-2003-0114, as amended by Order No. R2-2004-027) and Monitoring Data for Toxic Pollutants

Parameter	Units	Final Limits		Interim Limits		Monitoring Data (From 02/02 to 08/07)
		Daily Maximum	Monthly Average	Daily Maximum	Monthly Average	Highest Daily Concentration
Copper	µg/L	---	---	16	---	11
Lead	µg/L	3.2	1.6	---	---	1.4
Mercury	µg/L	---	---	---	0.084	0.016
Nickel	µg/L	---	---	20	---	13
Cyanide	µg/L	---	---	25	---	9.7
Dioxin-TEQ	µg/L	---	---	---	1.3×10^{-8}	1.3×10^{-7}
Bromoform	µg/L	77	39	---	---	5
Chlorodibromomethane	µg/L	7.3	3.7	---	---	1
Dichlorobromomethane	µg/L	10.3	5.2	---	---	0.4
Bis(2-ethylhexyl)phthalate	µg/L	---	---	46	---	6.6

Parameter	Units	Final Limits		Interim Limits		Monitoring Data (From 02/02 to 08/07)
		Daily Maximum	Monthly Average	Daily Maximum	Monthly Average	Highest Daily Concentration
Aldrin	µg/L	---	---	0.005	---	<0.002
4,4'-DDE	µg/L	---	---	0.05	---	<0.002
Dieldrin	µg/L	---	---	0.01	---	0.003

Footnotes to Table F-4:

Unit Abbreviations

µg/L = micrograms per liter
< = Not Detected

D. Compliance Summary

1. **Compliance with Previous Numeric Effluent Limits.** No exceedances of numeric effluent limits were observed during the previous permit term.

2. **Compliance with Previous Permit Provisions.** A list of special activities required by the previous Order and the status of those requirements are shown in Table F-5, below.

Table F-5. Compliance with Previous Order Provisions

Provision Number	Requirement	Status of Completion
E.2	Regional Cyanide Study and Schedule – SSO for Cyanide	Annual report submitted by January 31 2005, and annually thereafter.
E.3	Dioxin and Furan Detection Limit Study	Final report submitted November 1, 2006
E.4	Bis(2-ethylhexyl)phthalate Laboratory Analysis Study	Final report submitted June 30, 2004.
E.6	Advanced Mercury Source Reduction Project	Final report submitted February 27, 2007
E.18	Annual Status Reports	Annual report submitted by February 28, 2005, and annually thereafter.

E. Planned Changes

The Discharger is planning to increase the design dry weather treatment capacity of the facility from 16.5 MGD (average dry weather flow) to 22.7 MGD during the term of this permit by upgrading and modifying certain treatment processes. The Discharger will test its system after the upgrades and modifications have been made to determine the new treatment capacity. Provision VI.C.9 requires the Discharger to demonstrate that the proposed Plant modifications will increase the treatment capacity to 22.7 MGD. The Discharger prepared an Environmental Impact Report in 1988 that addresses expansion of its secondary capacity to 22.7 MGD. The document is titled: "Delta Diablo Sanitation District Wastewater Facility Expansion Environmental Impact Report." The Final EIR was adopted by the Discharger's Board of Directors in 1988. The Discharger submitted a report titled "Anti-Degradation Analysis for Proposed Wastewater Treatment Plant Discharge Modification" in December 2008, which affirms that an increase in the effluent discharge flow rate to 23.4 MGD conforms to federal and state Antidegradation Policy requirements.

III. APPLICABLE PLANS, POLICIES, AND REGULATIONS

The requirements contained in the proposed Order are based on the requirements and authorities described in this section.

A. Legal Authorities

This Order is issued pursuant to CWA section 402 and implementing regulations adopted by the USEPA and Chapter 5.5, Division 7 of the CWC (commencing with section 13370). It shall serve as an NPDES permit for point source discharges from the Plant to surface waters. This Order also serves as WDRs pursuant to CWC Article 4, Chapter 4, Division 7 (commencing with section 13260).

B. California Environmental Quality Act (CEQA)

Under CWC section 13389, this action to adopt an NPDES permit is exempt from the provisions of CEQA.

C. State and Federal Regulations, Policies, and Plans

1. **Water Quality Control Plans.** *The Water Quality Control Plan for the San Francisco Bay Basin* (the Basin Plan) is the Regional Water Board's master water quality control planning document. It designates beneficial uses and water quality objectives for waters of the State, including surface waters and groundwater. It also includes programs of implementation to achieve water quality objectives. The Basin Plan was adopted by the Regional Water Board and approved by the State Water Resources Control Board, USEPA, and the Office of Administrative Law, as required. Requirements of this Order implement the Basin Plan.

   Beneficial uses applicable to New York Slough are as follows:

Table F-6. Beneficial Uses of New York Slough

Discharge Point	Receiving Water Name	Beneficial Use(s)
001	New York Slough	Agricultural Supply (AGR) Municipal and Domestic Supply (MUN) Groundwater Recharge (GWR) Industrial Service Supply (IND) Industrial Process Supply (PRO) Ocean, Commercial, and Sport Fishing (COMM) Estuarine Habitat (EST) Fish Migration (MIGR) Preservation of Rare and Endangered Species (RARE) Fish Spawning (SPWN) Wildlife Habitat (WILD) Water Contact Recreation (REC1) Non-Contact Water Recreation (REC2) Navigation (NAV)

2. **National Toxics Rule (NTR) and California Toxics Rule (CTR).** USEPA adopted the NTR on December 22, 1992, and amended it on May 4, 1995, and November 9, 1999. About 40 criteria in the NTR applied in California. On May 18, 2000, USEPA adopted the CTR.

The CTR promulgated new toxics criteria for California and, in addition, incorporated the previously adopted NTR criteria that were applicable in the state. The CTR was amended on February 13, 2001. These rules contain water quality criteria for priority toxic pollutants, which are applicable to New York Slough.

3. **State Implementation Policy.** On March 2, 2000, the State Water Board adopted the *Policy for Implementation of Toxics Standards for Inland Surface Waters, Enclosed Bays, and Estuaries of California* (State Implementation Policy or SIP*).* The SIP became effective on April 28, 2000, with respect to the priority pollutant criteria promulgated for California by the USEPA through the NTR and to the priority pollutant objectives established by the Regional Water Board in the Basin Plan. The SIP became effective on May 18, 2000, with respect to the priority pollutant criteria promulgated by the USEPA through the CTR. The State Water Board adopted amendments to the SIP on February 24, 2005 that became effective on July 13, 2005. The SIP establishes implementation provisions for priority pollutant criteria and objectives and provisions for chronic toxicity control. Requirements of this Order implement the SIP.

4. **Alaska Rule.** On March 30, 2000, USEPA revised its regulation that specifies when new and revised state and tribal water quality standards (WQS) become effective for CWA purposes [65 Fed. Reg. 24641 (April 27, 2000) codified at 40 CFR 131.21]. Under the revised regulation (also known as the Alaska Rule), new and revised standards submitted to USEPA after May 30, 2000, must be approved by USEPA before being used for CWA purposes. The final rule also provides that standards already in effect and submitted to USEPA by May 30, 2000, may be used for CWA purposes, whether or not approved by USEPA.

5. **Antidegradation Policy.** Regulations at 40 CFR section 131.12 require that State water quality standards include an antidegradation policy consistent with the federal policy. The State Water Board established California's antidegradation policy in State Water Board Resolution 68-16. Resolution 68-16 incorporates the federal antidegradation policy where the federal policy applies under federal law. Resolution 68-16 requires that existing water quality be maintained unless degradation is justified based on specific findings. The Regional Water Board's Basin Plan implements, and incorporates by reference, both the State and federal antidegradation policies. The permitted discharge is consistent with the antidegradation provisions of 40 CFR 131.12 and State Water Board Resolution 68-16.

   This Order provides for an increase in the volume of pollutants discharged and is consistent with the antidegradation provisions of 40 CFR 131.12 and State Water Resources Control Board Resolution 68-16. Detailed socioeconomic and alternatives analyses are required when the water quality impacts are significant. APU 90-004 states: "…a complete antidegradation analysis is not required if…[t]he "Regional Board determines the proposed action will produce minor effects which will not result in a significant reduction of water quality…" This is consistent with the federal guidance that states: "Applying antidegradation review requirements only to those activities that may result in significant degradation of water quality is a useful approach that allows states and tribes to focus their resources where they may result in the greatest environmental protection" (EPA, 2005).

The Discharger conducted a water quality impacts assessment to determine if the proposed increase in discharge from 16.5 MGD to 23.4 MGD will produce significant changes in the ambient water quality of Suisun Bay and the western Delta. The results of the water quality impact analysis are contained in a report titled, "*Anti-Degradation Analysis for Proposed Wastewater Treatment Plant Discharge Modification*," which was submitted to the Regional Water Board in December 2008. The report concluded that the impacts to Suisun Bay and the western Delta would be insignificant. Based on the information in the report, and other information contained in the record, the Regional Water Board finds that the proposed action to increase the discharge volume from 16.5 MGD to 23.4 MGD, as an average dry weather flow, will produce minor effects which will not result in a significant reduction of water quality.

6. **Anti-Backsliding Requirements.** CWA Sections 402(o)(2) and 303(d)(4) and NPDES regulations at 40 CFR 122.44(l) prohibit backsliding in NPDES permits. These anti-backsliding provisions require that effluent limitations in a reissued permit must be as stringent as those in the previous permit, with some exceptions in which limitations may be relaxed.

D. Impaired Water Bodies on CWA 303(d) List

In November 2006, the USEPA approved a revised list of impaired water bodies prepared by the State [hereinafter referred to as the 303(d) List], prepared pursuant to provisions of CWA section 303(d), which requires identification of specific water bodies where it is expected that water quality standards will not be met after implementation of technology-based effluent limitations on point sources. New York Slough is not listed as an impaired waterbody, but it is tributary to the Sacramento-San Joaquin Delta, which is a 303(d) listed waterbody for chlordane, DDT, dieldrin, dioxin compounds, exotic species, furan compounds, mercury, nickel, PCBs, selenium, and dioxin-like PCBs. The SIP requires final effluent limitations for all 303(d)-listed pollutants to be consistent with total maximum daily loads and associated waste load allocations. The Regional Water Board plans to adopt Total Maximum Daily Loads (TMDLs) for pollutants on the 303(d) list in the Sacramento-San Joaquin Delta within the next ten years. (A TMDL for mercury was adopted February 12, 2008.) TMDLs will establish waste load allocations (WLAs) for point sources and load allocations (LAs) for non-point sources, and will result in achieving the water quality standards for the waterbodies.

IV. RATIONALE FOR EFFLUENT LIMITATIONS AND DISCHARGE SPECIFICATIONS

The CWA requires point source dischargers to control the amount of conventional, non-conventional, and toxic pollutants that are discharged into waters of the United States. The control of pollutants discharged is established through effluent limitations and other requirements in NPDES permits. There are two principal bases for effluent limitations in the NPDES regulations: 40 CFR 122.44(a) requires that permits include applicable technology-based limitations and standards; and 40 CFR 122.44(d) requires that permits include WQBELs to attain and maintain applicable numeric and narrative water quality criteria to protect the beneficial uses of the receiving water. Where Reasonable Potential has been established for a pollutant, but there is no numeric criterion or objective for the pollutant, WQBELs may be established (1) using USEPA criteria guidance under CWA section 304(a), supplemented where necessary by other relevant information; (2) using an indicator parameter for the pollutant of concern; or (3) using a calculated numeric water

quality criterion, such as a proposed state criterion or policy interpreting the state's narrative criterion, supplemented with other relevant information, as provided in 40 CFR 122.44(d)(1)(vi).

Specific factors affecting the development of limitations and requirements in this Order are discussed below.

A. Discharge Prohibitions

1. **Discharge Prohibition III.A (No discharge other than that described in this Order):** This prohibition is the same as in the previous permit and is based on CWC section 13260, which requires filing a Report of Waste Discharge before discharges can occur. Discharges not described in the Report of Waste Discharge, and subsequently in this Order, are prohibited.

2. **Discharge Prohibition III.B (No discharge receiving less than 61:1 dilution):** This provision is based on the performance of the Discharger's outfall diffuser as modeled in the Discharger's 2008 dilution study[1]. Some water quality-based effluent limitations in this Order are based on this level of dilution.

3. **Discharge Prohibition III.C (No bypass or overflow of untreated or partially treated wastewaters):** This prohibition is based on 40 CFR 122.41(m) (see Federal Standard Provisions, Attachment D, section G.) This prohibition is changed from the previous permit in that the practice of blending is no longer allowed.

4. **Discharge Prohibition III.D (Average dry weather flow not to exceed dry weather design capacity):** This prohibition is based on the design treatment capacity of the Plant. Exceedance of the Plant's average dry weather flow design capacity of 16.5 MGD may result in lowering the reliability of achieving compliance with water quality requirements. The treatment capacity may be increased up to 22.7 MGD if the conditions of Provision VI.C.9 are met.

5. **Discharge Prohibition III. E (No sanitary sewer overflows to waters of the United States):** Discharge Prohibition No. 15 from Basin Plan Table 4-1 and the CWA prohibit the discharge of wastewater to surface waters except as authorized under an NPDES permit. POTWs must achieve secondary treatment, at a minimum, and any more stringent limitations that are necessary to achieve water quality standards [33 U.S.C. § 1311 (b)(1)(B and C)]. Therefore, a sanitary sewer overflow that results in the discharge of raw sewage, or sewage not meeting secondary treatment requirements, to surface waters is prohibited under the CWA and the Basin Plan.

B. Effluent Limitations for Conventional and Non-Conventional Pollutants

1. Scope and Authority

CWA section 301(b)(1)(B) requires USEPA to develop secondary treatment standards (the level of effluent quality attainable through application of secondary or equivalent treatment)

[1] Near-field Mixing Zone and Dilution Analysis for the Delta Diablo Sanitation District Outfall Diffuser to New York Slough, December 17, 2008. Larry Walker Associates

for POTWs. USEPA promulgated such technology-based effluent guidelines for POTWs at 40 CFR 133. These Secondary Treatment Regulations include the following minimum requirements for POTWs, which are applicable to discharges from the Plant.

Table F-7. Secondary Treatment Requirements

	30-Day Average	7-Day Average
BOD [1]	30 mg/L	45 mg/L
TSS [1]	30 mg/L	45 mg/L
pH	6.0 – 9.0	

[1] The 30 day average percent removal shall not be less than 85 percent.

2. Applicable Effluent Limitations

This Order contains the following effluent limitations for conventional and non-conventional pollutants, applicable to Discharge Point 001.

Table F-8. Summary of Effluent Limitations for Conventional and Non-conventional Pollutants

Parameter	Units	Effluent Limitations				
		Average Monthly	Average Weekly	Maximum Daily	Instantaneous Minimum	Instantaneous Maximum
BOD_5	mg/L	30	45	---	---	---
TSS	mg/L	30	45	---	---	---
BOD_5 and TSS % Removal	%	85	---	---	---	---
Oil and Grease	mg/L	10	---	20	---	---
pH	s.u.	---	---	---	6.0	9.0
Total Residual Chlorine	mg/L	---	---	---	---	0.0 [1]
Enterococcus Bacteria	CFU/ 100 mL	(2)				

[1] Requirement defined as below the limit of detection in standard test methods defined in the latest USEPA approved edition of *Standard Methods for the Examination of Water and Wastewater*. The Discharger may elect to use a continuous on-line monitoring system for measuring flow, chlorine, and sodium bisulfite dosage (including a safety factor) and concentration to prove that chlorine residual exceedances are false positives. Convincing evidence must be provided to Regional Water Board staff to conclude these false positive exceedances are not violations of this permit.

[2] The 30-day geometric mean value shall not exceed 33 colony forming units (CFU)/100 mL.

The limitations established for Oil and Grease are levels attainable by secondary treatment and are required by the Basin Plan (Table 4-2) for all discharges to inland surface waters and enclosed bays and estuaries of the San Francisco Bay Region.

The limitation for pH is retained from Order No. R2-2003-0114 and is required by USEPA's Secondary Treatment Regulation at 40 CFR 133 and by the Basin Plan (Table 4-2) for deep water discharges.

This Order retains the instantaneous maximum limitation for chlorine of 0.0 mg/L, which is based on Table 4-2 of the Basin Plan.

Effluent limitations for BOD and TSS, including the 85% removal requirement, are retained from Order No. R2-2003-0114. NPDES regulations at 40 CFR 122.45(d)(2) specify that discharge limitations for POTWs shall be stated as average weekly limitations and average monthly limitations, unless impracticable.

The effluent limitation for total coliform has been replaced by an effluent limitation for enterococcus bacteria. Shellfish harvesting is not a beneficial use for New York Slough. The alternate enterococcus limitation is based on the freshwater objectives for water contact recreation from Table 3-2 of the Basin Plan.

The technology-based effluent limitations for settleable matter are not retained from Order No. R2-2003-0114, as the Regional Water Board has determined that compliance with the Secondary Treatment Regulation at 40 CFR 133 and with the Basin Plan (Table 4-2) requirements for all discharges to inland surface waters and enclosed bays and estuaries of the San Francisco Bay Region will ensure removal of settleable solids to acceptably low levels below 0.1 mL/L-hr (30 day average) and 0.2 mL/L-hr (daily maximum).

C. Effluent Limitations for Toxic Pollutants

1. Scope and Authority

a. NPDES regulations at 40 CFR 122.44(d)(1)(i) require permits to include Water Quality-Based Effluent Limitations (WQBELs) for pollutants (including toxicity) that are or may be discharged at levels that cause, have reasonable potential to cause, or contribute to an excursion above any state water quality standard (Reasonable Potential). The process for determining Reasonable Potential and, when necessary, calculating WQBELs is intended to (1) protect the designated beneficial uses of the receiving water specified in the Basin Plan, and (2) achieve applicable WQOs and WQO that are contained in the California Toxics Rule (CTR), National Toxics Rule (NTR), Basin Plan, and other State plans and policies.

b. NPDES regulations and the SIP provide the basis to establish Maximum Daily Effluent Limitations (MDELs).

(1) NPDES Regulations. NPDES regulations at 40 CFR 122.45(d) state: "For continuous discharges all permit effluent limitations, standards, and prohibitions, including those necessary to achieve water quality standards, shall *unless impracticable* be stated as maximum daily and average monthly discharge limitations for all discharges other than publicly owned treatment works."

(2) SIP. The SIP (page 8, Section 1.4) requires WQBELs be expressed as MDELs and average monthly effluent limitations (AMELs).

c. MDELs are used in this Order to protect against acute water quality effects. The MDELs are necessary for preventing fish kills or mortality to aquatic organisms.

2. Applicable Beneficial Uses and Water Quality Criteria and Objectives

The WQC and WQOs applicable to the receiving waters for this discharge are from the Basin Plan; the CTR, established by USEPA at 40 CFR 131.38; and the NTR, established by USEPA at 40 CFR 131.36. Some pollutants have WQC/WQOs established by more than one of these three sources.

a. Basin Plan. The Basin Plan specifies numeric WQOs for 10 priority toxic pollutants, as well as narrative WQOs for toxicity and bioaccumulation in order to protect beneficial uses. The pollutants for which the Basin Plan specifies numeric objectives are arsenic, cadmium, chromium (VI), copper in freshwater, lead, mercury, nickel, silver, zinc, and cyanide. The narrative toxicity objective states in part that "[a]ll waters shall be maintained free of toxic substances in concentrations that are lethal to or that produce other detrimental responses in aquatic organisms." The bioaccumulation objective states in part that "[c]ontrollable water quality factors shall not cause a detrimental increase in concentrations of toxic substances found in bottom sediments or aquatic life. Effects on aquatic organisms, wildlife, and human health will be considered." Effluent limitations and provisions contained in this Order are designed based on available information to implement these objectives.

The Basin Plan contains narrative WQOs for constituents of concern for municipal supplies. The receiving water for the Delta Diablo discharge includes a beneficial use category of Municipal and Domestic Supply (MUN). Chapter 3 of the Basin Plan incorporates the provisions of Title 22, Division 4, Chapter 15 of Title 22 of the California Code of Regulations, which has established Maximum Contaminant Levels (MCLs) for certain pollutants, as applicable water quality objectives for receiving waters with the MUN designation.

b. CTR. The CTR specifies numeric aquatic life criteria for 23 priority toxic pollutants and numeric human health criteria for 57 priority toxic pollutants. These criteria apply to all inland surface waters and enclosed bays and estuaries of San Francisco Bay Region, although Basin Plan Tables 3-3 and 3-4 include numeric objectives for certain of these priority toxic pollutants, which supersede CTR criteria (except in the South Bay south of the Dumbarton Bridge).

CTR human health criteria are further categorized as "water and organisms" and "organisms only." Because the receiving water is designated for municipal and domestic supply, both categories apply to this discharge.

c. NTR. The NTR establishes numeric aquatic life criteria for selenium and numeric human health criteria for 33 toxic organic pollutants for waters of San Francisco Bay upstream to and including Suisun Bay and the Sacramento River Delta. These criteria of the NTR apply to New York Slough, the receiving water for this Discharger.

d. Basin Plan Receiving Water Salinity Policy. The Basin Plan (like the CTR and the NTR) states that the salinity characteristics (i.e., freshwater vs. saltwater) of the receiving water shall be considered in determining the applicable WQO. Freshwater criteria shall apply to discharges to waters with salinities equal to or less than one part per thousand (ppt) at least 95 percent of the time. Saltwater criteria shall apply to discharges to waters

with salinities equal to or greater than 10 ppt at least 95 percent of the time in a normal water year. For discharges to water with salinities in between these two categories, or tidally influenced freshwaters that support estuarine beneficial uses, the criteria shall be the lower of the salt or freshwater criteria (the latter calculated based on ambient hardness) for each substance.

The receiving water for this discharger is New York Slough, which is tidally influenced. New York Slough is located within the Sacramento-San Joaquin Delta, which is specifically identified as supporting an estuarine habitat beneficial use. The salinity of the receiving water is therefore considered estuarine, and the lower of the marine and freshwater WQOs from the Basin Plan, NTR, and CTR apply to this discharge.

e. **Receiving Water Hardness.** Ambient hardness values are used to calculate freshwater WQOs that are hardness dependent. In determining the WQOs for this Order, Regional Water Board staff used a hardness of 90 mg/L as $CaCO_3$, which was calculated as the adjusted geometric mean (AGM) of the hardness data (censored for hardness greater than 400 mg/L and salinity greater than 1 ppt) collected at the San Joaquin Regional Monitoring Program station, an upstream background station to the discharge.

f. **Site-Specific Metals Translators.** Because NPDES regulations at 40 CFR 122.45(c) require that effluent limitations for metals be expressed as total recoverable metal, and applicable WQO for metals are typically expressed as dissolved metal, factors or translators must be used to convert metals concentrations from dissolved to total recoverable and vice versa. In the CTR, USEPA establishes default translators that are used in NPDES permitting activities; however, site-specific conditions, such as water temperature, pH, suspended solids, and organic carbon, greatly impact the form of metal (dissolved, filterable, or otherwise) that is present in the water and therefore available to cause toxicity. In general, the dissolved form of the metals is more available and more toxic to aquatic life than filterable forms. Site-specific translators can be developed to account for site-specific conditions, thereby preventing exceedingly stringent or under protective WQOs.

For deep water discharges to New York Slough, the Regional Water Board used translators for copper and nickel, based on recommendations of the Clean Estuary Partnership's *North of Dumbarton Bridge Copper and Nickel Development and Selection of Final Translators* (2005). The copper translator for deepwater discharges to New York Slough are 0.38 (chronic) and 0.66 (acute). In determining the need for and calculating WQBELs for all other metals, the Regional Water Board staff used default translators established by the USEPA in the CTR at 40 CFR 131.38(b)(2), Table 2.

3. Determining the Need for WQBELs

NPDES regulations at 40 CFR 122.44 (d)(1)(i) require permits to include WQBELs for all pollutants (non-priority and priority) "which the Director determines are or may be discharged at a level which will cause, have the reasonable potential to cause, or contribute to an excursion above any narrative or numeric criteria within a State water quality standard." Thus, assessing whether a pollutant has "Reasonable Potential" is the fundamental step in determining whether or not a WQBEL is required. For non-priority pollutants, Regional

Water Board staff used available monitoring data, the receiving water's designated beneficial uses, and/or previous permit pollutant limitations to determine Reasonable Potential. For priority pollutants, Regional Water Board staff used the methods prescribed in SIP Section 1.3 to determine if the discharge from the Plant demonstrates Reasonable Potential.

a. Reasonable Potential Analysis (RPA)

Using the methods prescribed in SIP Section 1.3, Regional Water Board staff analyzed the effluent data to determine if the discharge from the Plant demonstrates Reasonable Potential. The RPA compares the effluent data with numeric and narrative WQOs in the Basin Plan and numeric WQO established by USEPA in the NTR and CTR.

b. Reasonable Potential Methodology

Using the methods and procedures prescribed in SIP Section 1.3, Regional Water Board staff analyzed the effluent and background data and the nature of facility operations to determine if the discharge has Reasonable Potential to cause or contribute to exceedances of applicable WQOs (including site-specific objectives). The RPA projects a maximum effluent concentration (MEC) for each pollutant based on existing data, while accounting for a limited data set and effluent variability. There are three triggers in determining Reasonable Potential.

(1) The first trigger is activated if the MEC is greater than or equal to the lowest applicable WQO (MEC $\geq$ WQO), which has been adjusted, if appropriate, for pH, hardness, and translator data. If the MEC is greater than or equal to the adjusted WQO, then that pollutant has Reasonable Potential, and a WQBEL is required.

(2) The second trigger is activated if the observed maximum ambient background concentration (B) is greater than the adjusted WQO (B > WQO), and the pollutant is detected in any of the effluent samples (MEC > ND).

(3) The third trigger is activated if a review of other information determines that a WQBEL is required to protect beneficial uses, even though both MEC and B are less than the WQO. A limitation may be required under certain circumstances to protect beneficial uses.

c. Effluent Data

The Regional Water Board's August 6, 2001, letter titled *Requirement for Monitoring of Pollutants in Effluent and Receiving Water to Implement New Statewide Regulations and Policy* (August 6, 2001 Letter – available online; see Standard Language and Other References Available Online, below) to all permittees, formally required the Discharger (pursuant to CWC Section 13267) to initiate or continue monitoring for the priority pollutants using analytical methods that provide the best detection limits reasonably feasible. Regional Water Board staff analyzed these data and the nature of the effluent to determine if the discharge has Reasonable Potential. The RPA is based on the effluent monitoring data collected by the Discharger from August 2005 through July 2008 for most inorganic pollutants, and from March 2004 through March 2008 for most organic pollutants.

d. Ambient Background Data

Ambient background values are used to determine reasonable potential and to calculate effluent limitations, when necessary. For the RPA, ambient background concentrations are the observed maximum detected water column concentrations. The SIP states that for calculating WQBELs, ambient background concentrations are either the observed maximum ambient water column concentrations or, for criteria intended to protect human health from carcinogenic effects, the arithmetic mean of observed ambient water concentrations. The RMP station located in the Sacramento River is a far field background station that has been monitored for most of the inorganic (CTR constituent numbers 1–15) and some of the organic (CTR constituent numbers 16–126) toxic pollutants, and these data from the RMP were used as background data in performing the RPA for this Discharger.

The RMP has not analyzed all the constituents listed in the CTR. These data gaps are addressed by the August 6, 2001, Letter. The August 6, 2001, Letter formally required Dischargers (pursuant to CWC Section 13267) to conduct ambient background monitoring and effluent monitoring for those constituents not currently monitored by the RMP, and to provide this technical information to the Regional Water Board.

On May 15, 2003, a group of several San Francisco Bay Region dischargers (known as the Bay Area Clean Water Agencies, or BACWA) submitted a collaborative receiving water study, entitled the *San Francisco Bay Ambient Water Monitoring Interim Report* (2003). This study includes monitoring results from sampling events in 2002 and 2003 for the remaining priority pollutants not monitored by the RMP. The RPA was conducted and the WQBELs were calculated using RMP data from 1996 through 2006 for inorganics and organics at the Sacramento River RMP station, and additional data from BACWA's *Ambient Water Monitoring: Final CTR Sampling Update* (2004) for the Sacramento RMP station.

e. Reasonable Potential Determination

The MECs, most stringent applicable WQOs, and background concentrations used in the RPA are presented in the following table, along with the RPA results (Yes or No) for each pollutant analyzed. Reasonable Potential was not determined for all pollutants, as there are not applicable WQOs for all pollutants, and monitoring data are not available for others. RPA results are shown below. Based on a review of the effluent data collected during the previous permit term, the pollutants that exhibit Reasonable Potential are copper, selenium, cyanide, dioxin-TEQ, bromoform, chlorodibromomethane, methylene chloride, bis(2-ethylhexyl)phthalate, total ammonia, and mercury. The discharge of mercury is not covered by this Order because it is regulated by Regional Water Board Order No. R2-2007-0077.

Table F-9. Reasonable Potential Analysis Summary

CTR #	Priority Pollutants	MEC or Minimum DL [a][b] (µg/L)	Governing WQO (µg/L)	Maximum Background or Minimum DL [a][b] (µg/L)	RPA Results [c]
1	Antimony	1	6	0.34	No
2	Arsenic	17	36	3.7	No

CTR #	Priority Pollutants	MEC or Minimum DL [a][b] (µg/L)	Governing WQO (µg/L)	Maximum Background or Minimum DL [a][b] (µg/L)	RPA Results [c]
3	Beryllium	< 0.006	4	0.126	No
4	Cadmium	0.2	1.0	0.066	No
5a	Chromium (III)	2.1	50	Not Available	No
5b	Chromium (VI)	2.1	11	Not Available	No
6	**Copper**	**11**	7.2	9.9	**Yes**
7	Lead	1.4	2.8	2.3	No
8	**Mercury (303d listed)**	**0.016**	0.025	**0.038**	**Yes**
9	Nickel (303d listed)	13	30	22	No
10	**Selenium (303d listed)**	**7**	5	0.45	**Yes**
11	Silver	0.05	2.2	0.057	No
12	Thallium	0.03	1.7	0.143	No
13	Zinc	28	86	18	No
14	**Cyanide**	**9.7**	2.9	0.5	**Yes**
15	Asbestos	< 1	7000000	Not Available	No
16	2,3,7,8-TCDD	< 5.6E-07	1.3E-08	6.0E-09	No
	Dioxin TEQ (303d listed)	**1.3E-07**	1.3E-08	4.8E-08	**Yes**
17	Acrolein	< 0.5	320	< 0.5	No
18	Acrylonitrile	< 0.33	0.059	< 0.02	No
19	Benzene	< 0.03	1	< 0.05	No
20	**Bromoform**	**5**	4.3	< 0.5	**Yes**
21	Carbon Tetrachloride	< 0.04	0.25	0.06	No
22	Chlorobenzene	< 0.03	70	< 0.5	No
23	**Chlorodibromomethane**	**1**	0.41	< 0.05	**Yes**
24	Chloroethane	< 0.03	No Criteria	< 0.5	Ud
25	2-Chloroethylvinyl ether	< 0.1	No Criteria	< 0.5	Ud
26	Chloroform	1.3	No Criteria	< 0.5	Ud
27	Dichlorobromomethane	0.4	0.56	< 0.05	No
28	1,1-Dichloroethane	< 0.04	5	< 0.05	No
29	1,2-Dichloroethane	< 0.04	0.38	0.04	No
30	1,1-Dichloroethylene	< 0.06	0.057	< 0.5	No
31	1,2-Dichloropropane	< 0.03	0.52	< 0.5	No
32	1,3-Dichloropropylene	< 0.03	0.5	Not Available	No
33	Ethylbenzene	< 0.04	300	< 0.5	No
34	Methyl Bromide	< 0.05	48	< 0.5	No
35	Methyl Chloride	< 0.04	No Criteria	< 0.5	Ud
36	**Methylene Chloride**	**11**	4.7	< 0.5	**Yes**
37	1,1,2,2-Tetrachloroethane	< 0.04	0.17	< 0.05	No
38	Tetrachloroethylene	< 0.04	0.8	< 0.05	No
39	Toluene	0.1	150	< 0.3	No
40	1,2-Trans-Dichloroethylene	< 0.05	10	< 0.5	No
41	1,1,1-Trichloroethane	< 0.03	200	< 0.5	No
42	1,1,2-Trichloroethane	< 0.05	0.6	< 0.05	No
43	Trichloroethylene	< 0.05	2.7	< 0.5	No
44	Vinyl Chloride	< 0.05	0.5	< 0.5	No
45	2-Chlorophenol	< 0.6	120	Not Available	No
46	2,4-Dichlorophenol	< 0.7	93	< 1.3	No
47	2,4-Dimethylphenol	< 0.8	540	< 1.3	No
48	2-Methyl- 4,6-Dinitrophenol	< 0.6	13	< 1.2	No
49	2,4-Dinitrophenol	< 0.6	70	< 0.7	No
50	2-Nitrophenol	< 0.6	No Criteria	< 1.3	Ud
51	4-Nitrophenol	4.7	No Criteria	< 1.6	Ud
52	3-Methyl 4-Chlorophenol	< 0.5	No Criteria	< 1.1	Ud
53	Pentachlorophenol	< 0.6	0.28	< 1	No

CTR #	Priority Pollutants	MEC or Minimum DL [a][b] (µg/L)	Governing WQO (µg/L)	Maximum Background or Minimum DL [a][b] (µg/L)	RPA Results [c]
54	Phenol	6	21000	< 1.3	No
55	2,4,6-Trichlorophenol	< 0.6	2.1	< 1.3	No
56	Acenaphthene	< 0.017	1200	0.0019	No
57	Acenaphthylene	< 0.019	No Criteria	0.000492	Ud
58	Anthracene	< 0.02	9600	0.000389	No
59	Benzidine	< 0.95	0.00012	< 0.0003	No
60	Benzo(a)Anthracene	< 0.019	0.0044	0.0011	No
61	Benzo(a)Pyrene	< 0.019	0.0044	0.0008215	No
62	Benzo(b)Fluoranthene	< 0.02	0.0044	0.0019	No
63	Benzo(ghi)Perylene	< 0.02	No Criteria	0.0012465	Ud
64	Benzo(k)Fluoranthene	< 0.02	0.0044	0.000928	No
65	Bis(2-Chloroethoxy)Methane	< 0.7	No Criteria	< 10	Ud
66	Bis(2-Chloroethyl)Ether	< 0.67	0.031	< 0.3	No
67	Bis(2-Chloroisopropyl)Ether	< 0.6	1400	Not Available	No
68	**Bis(2-Ethylhexyl)Phthalate**	**6.6**	1.8	0.68	**Yes**
69	4-Bromophenyl Phenyl Ether	< 0.4	No Criteria	< 0.23	Ud
70	Butylbenzyl Phthalate	0.7	3000	< 0.5	No
71	2-Chloronaphthalene	< 0.5	1700	< 0.3	No
72	4-Chlorophenyl Phenyl Ether	< 0.5	No Criteria	< 0.3	Ud
73	Chrysene	< 0.02	0.0044	0.001067	No
74	Dibenzo(a,h)Anthracene	< 0.02	0.0044	0.00067	No
75	1,2-Dichlorobenzene	< 0.03	600	< 0.3	No
76	1,3-Dichlorobenzene	< 0.03	400	< 0.3	No
77	1,4-Dichlorobenzene	0.3	5	< 0.3	No
78	3,3 Dichlorobenzidine	< 0.3	0.04	< 0.0002	No
79	Diethyl Phthalate	1.3	23000	Not Available	No
80	Dimethyl Phthalate	< 0.57	313000	Not Available	No
81	Di-n-Butyl Phthalate	< 0.57	2700	1.72	No
82	2,4-Dinitrotoluene	< 0.6	0.11	< 0.27	No
83	2,6-Dinitrotoluene	< 0.48	No Criteria	< 0.29	Ud
84	Di-n-Octyl Phthalate	< 0.67	No Criteria	Not Available	Ud
85	1,2-Diphenylhydrazine	< 0.6	0.04	0.0087	No
86	Fluoranthene	0.03	300	0.0034255	No
87	Fluorene	< 0.02	1300	0.0024	No
88	Hexachlorobenzene	< 0.4	0.00075	0.000109	No
89	Hexachlorobutadiene	< 0.7	0.44	< 0.3	No
90	Hexachlorocyclopentadiene	< 0.4	50	< 0.3	No
91	Hexachloroethane	< 0.6	1.9	< 0.2	No
92	Indeno(1,2,3-cd)Pyrene	< 0.02	0.0044	0.001317	No
93	Isophorone	< 0.48	8.4	< 0.3	No
94	Naphthalene	0.07	No Criteria	0.00681	Ud
95	Nitrobenzene	< 0.67	17	< 0.25	No
96	N-Nitrosodimethylamine	< 0.57	0.00069	< 0.3	No
97	N-Nitrosodi-n-Propylamine	< 0.6	0.005	< 0.0002	No
98	N-Nitrosodiphenylamine	< 0.57	5	< 0.001	No
99	Phenanthrene	< 0.02	No Criteria	0.003442	Ud
100	Pyrene	0.2	960	0.00358	No
101	1,2,4-Trichlorobenzene	< 0.6	5	< 0.3	No
102	Aldrin	< 0.002	0.00013	0.00000404	No
103	Alpha-BHC	< 0.002	0.0039	0.0003468	No
104	Beta-BHC	< 0.002	0.014	0.000118	No
105	Gamma-BHC	< 0.002	0.019	0.0010032	No
106	Delta-BHC	< 0.002	No Criteria	0.000038	Ud

CTR #	Priority Pollutants	MEC or Minimum DL [a][b] (µg/L)	Governing WQO (µg/L)	Maximum Background or Minimum DL [a][b] (µg/L)	RPA Results [c]
107	Chlordane (303d listed)	< 0.003	0.00057	0.0003	No
108	4,4'-DDT (303d listed)	< 0.002	0.00059	0.000349	No
109	4,4'-DDE (linked to DDT)	< 0.002	0.00059	0.00092	No
110	4,4'-DDD	< 0.0019	0.00083	0.000347	No
111	Dieldrin (303d listed)	< 0.0019	0.00014	0.00038	No
112	Alpha-Endosulfan	0.003	0.0087	0.0000571	No
113	beta-Endolsulfan	< 0.0019	0.0087	0.0000424	No
114	Endosulfan Sulfate	< 0.002	110	0.000284	No
115	Endrin	< 0.0019	0.0023	0.00015	No
116	Endrin Aldehyde	< 0.002	0.76	Not Available	No
117	Heptachlor	< 0.0029	0.00021	0.000011	No
118	Heptachlor Epoxide	< 0.0019	0.0001	0.000097	No
119-125	PCBs sum (303d listed)	< 0.02	0.00017	0.0007923	No
126	Toxaphene	< 0.14	0.0002	Not Available	No
	Tributylin	< 0.00036	0.0074 [d]	0.00214	No
	Total PAHs	0.2	15	0.0175332	No
	Total Ammonia (mg/L N)	**52**	1.2	0.18	**Yes**

[a] The Maximum Effluent Concentration (MEC) and maximum background concentration are the actual detected concentrations unless preceded by a "<" sign, in which case the value shown is the minimum detection level.
[b] The MEC or maximum background concentration is "Not Available" when there are no monitoring data for the constituent.
[c] RPA Results = Yes, if MEC > WQO/WQC, B > WQO/WQC and MEC is detected, or Trigger 3;
= No, if MEC and B are < WQO/WQC or all effluent data are undetected;
= Undetermined (Ud), if no criteria have been promulgated or there are insufficient data.
[d] from *Ambient Aquatic Life Water Quality Criteria for Tributylin (TBT).* EPA 822-R-03-031

(1) Constituents with limited data. The Discharger has performed sampling and analysis for the constituents listed in the CTR. This data set was used to perform the RPA. In some cases, Reasonable Potential cannot be determined because effluent data are limited, or ambient background concentrations are not available. The Discharger will continue to monitor for these constituents in the effluent using analytical methods that provide the best feasible detection limits. When additional data become available, further RPA will be conducted to determine whether to add numeric effluent limitations to this Order or to continue monitoring.

(2) Pollutants with no Reasonable Potential. WQBELs are not included in this Order for constituents that do not demonstrate Reasonable Potential; however, monitoring for those pollutants is still required. If concentrations of these constituents are found to have increased significantly, this Order requires the Discharger to investigate the source(s) of the increase(s). Remedial measures are required if the increases pose a threat to water quality in the receiving water.

Order No. R2-2003-0114, as amended by Order No. R2-2004-027, included final WQBELs for lead and dichlorobromomethane; however, because the RPA showed that discharges from the Plant no longer demonstrate Reasonable Potential for these pollutants, effluent limitations for these pollutants are not retained by this Order, and new effluent limitations are not established. Elimination of final WQBELs for lead and dichlorobromomethane in this Order is consistent with anti-backsliding requirements in accordance with State Water Board Order No. WQ 2001-16.

4. WQBEL Calculations.

a. Pollutants with Reasonable Potential

WQBELs were developed for the toxic and priority pollutants that were determined to have reasonable potential to cause or contribute to exceedances of the WQOs or WQC. The WQBELs were calculated based on appropriate WQOs and the appropriate procedures specified in SIP Section 1.4. The WQOs used for each pollutant with Reasonable Potential are discussed below.

b. Shallow/Deep Water Discharge

The discharge from the Plant to New York Slough is a deep water discharge, which is defined by the Basin Plan as a discharge through a diffuser that receives a minimum initial dilution of 10 to 1.

c. Dilution Credit

The SIP provides the basis for dilution credits. The Plant is designed to achieve a minimum initial dilution of at least 10:1. Based on review of RMP data from local and Central Bay monitoring stations, there is variability in receiving water quality, and the hydrology of the receiving water is complex. There is uncertainty, therefore, regarding the representative nature of ambient background data for effluent limitation calculations. Pursuant to SIP section 1.4.2.1, "dilution credit may be limited or denied on a pollutant-by-pollutant basis…." The Regional Water Board has determined that a conservative 10:1 (D=9) dilution credit is appropriate for most toxic priority pollutants to protect beneficial uses. No dilution credit is granted, however, for bioaccumulative pollutants that impair the Sacramento-San Joaquin Delta pursuant to CWA 303(d). The basis for the Regional Water Board's determination regarding dilution is further explained below.

(1) For certain pollutants, dilution credits are not included in calculating the final WQBELs. This decision is based on the concentrations of these pollutants in aquatic organisms, sediment, and the water column. The Regional Water Board updated and approved the 303(d) list on October 25, 2006. For the Sacrament-San Joaquin Delta, the Regional Water Board placed mercury, polychlorinated biphenyls (PCBs), and selenium on the 303(d) list. USEPA added dioxin and furan compounds, chlordane, dieldrin, nickel, and 4,4'-DDT. These decisions are based on the following factors that suggest there is no assimilative capacity in the Sacramento-San Joaquin Delta for these pollutants.

Samples of tissue taken from fish in San Francisco Bay show the presence of these pollutants at concentrations greater than screening levels (*Contaminant Concentrations in Fish from San Francisco Bay*, May 1997). The Office of Environmental Health and Hazard Assessment (OEHHA) also completed a preliminary review of data in the 1994 San Francisco Bay pilot study, *Contaminated Levels in Fish Tissue from San Francisco Bay*. The results of the study showed elevated levels of chemical contaminants in fish tissues. In December 1994, OEHHA subsequently issued an interim consumption advisory covering certain fish species in

the Delta. This advisory is still in effect for exposure to sport fish that are found to be contaminated with dioxins and certain pesticides (e.g., DDT).

(2) For most other constituents (except ammonia and cyanide, which are discussed below), a conservative allowance of 10:1 dilution has been assigned to protect beneficial uses and is retained from the previous permit. This 10:1 dilution ratio is from the Basin Plan Prohibition 1, which prohibits discharges with less than 10:1 dilution. The dilution credit is also based on SIP Section1.4.2 as follows:

(a) A far-field background station is appropriate because the receiving water body (the Delta) is a very complex estuarine system with highly variable and seasonal upstream freshwater inflows and diurnal tidal saltwater inputs. The SIP allows background to be determined on a discharge-by-discharge or water body-by-water body basis (SIP section 1.4.3). Consistent with the SIP, a water body-by-water body basis is used because of the uncertainties inherent in accurately characterizing ambient background conditions in a complex estuarine system on a discharge-by-discharge basis.

(b) Because of the complex hydrology of the Delta, a mixing zone has not been established. There are uncertainties in accurately determining the mixing zones for each discharge. The models that have been used to predict dilution have not considered the three-dimensional nature of the currents in the Delta resulting from the interaction of tidal flushes and seasonal fresh water outflows. Being heavier and colder than fresh water, ocean salt water enters San Francisco Bay on diurnal tidal cycles, generally flowing beneath the warmer fresh water that moves seaward during wet seasons. When these waters mix and interact, complex circulation patterns occur throughout the Delta but are most prevalent in the San Pablo, Carquinez Straight, and Suisun Bay areas. The locations of this mixing and interaction change, depending on the strength of each tide and variable rate of delta outflow. Additionally, sediment loads to the Bay from the Central Valley change on a long-term basis, affecting the depth of different parts of the Delta and resulting in alteration of flow patterns and mixing and dilution that is achieved at an outfall.

(c) The SIP allows a limited mixing zone and dilution credit for persistent pollutants. SIP Section 1.4.2.2 specifies that the Regional Water Board shall "significantly limit a mixing zone and dilution credit as necessary. For example, in determining the extent of a mixing zone or dilution credit, the RWQCB shall consider the presence of pollutants in the discharge that are … persistent." The SIP defines persistent pollutants as "substances for which degradation or decomposition in the environment is nonexistent or very slow." The pollutants at issue here are persistent pollutants (e.g., copper). The dilution studies that estimate initial dilution do not address the effects of these persistent pollutants, such as their long term effects on sediment concentrations.

(3) Applying actual initial dilution is appropriate for calculating the effluent limits for ammonia, which are non-persistent pollutants that rapidly disperse and degrade to a non-toxic state. A dilution of 61:1 (D=60) was used for calculating WQBELs for

ammonia based on modeling[2] of flow conditions appropriate for acute toxicity concerns (maximum daily flow) because the results were more conservative than those based on flow conditions for chronic toxicity concerns (average dry-weather flow).

d. Calculation of Pollutant-Specific WQBELs

WQBELs were developed for the toxic and priority pollutants that were determined to have reasonable potential to cause or contribute to exceedances of applicable WQOs. The WQBELs were calculated based on appropriate WQOs and the appropriate procedures specified in SIP Section 1.4. The WQOs and calculations of WQBELs for each pollutant with Reasonable Potential are discussed below.

(1) Copper

(a) Copper WQO. The chronic and acute marine WQO for copper from the Basin Plan and the CTR are 2.5 and 3.9 micrograms per liter (µg/L), respectively, expressed as dissolved metal. These Site Specific Objectives (SSOs) were established by Regional Water Board Order No. R2-2006-0086 and approved by the USEPA on January 6, 2009. Regional Water Board staff converted these WQO to total recoverable metal using the site-specific translators of 0.38 (chronic) and 0.66 (acute), as recommended by the Clean Estuary Project's *North of Dumbarton Bridge Copper and Nickel Development and Selection of Final Translators* (2005) and a Water Effects Ratio of 2.4. The resulting chronic water quality criterion of 16 µg/L and acute water quality criterion of 14 µg/L were used to perform the RPA.

(b) RPA Results. This Order establishes effluent limitations for copper by Trigger 3.

(c) Copper WQBELs. WQBELs for copper, calculated according to SIP procedures (using a CV of 0.24) are an AMEL of 38 µg/L and an MDEL of 53 µg/L, based on the Basin Plan's copper SSOs (Regional Water Board Resolution R2-2007-0042, which was approved by the State Water Board on January 15, 2008 and by USEPA on January 6, 2009). The limitations take into account the deep water nature of the discharge and are based on an initial dilution of 10:1.

(d) Immediate Compliance Feasible. Statistical analysis of effluent data for copper, collected over the period of August 2005 through July 2008, shows that the 95th percentile (9.2 µg/L) is less than the AMEL (38 µg/L); the 99th percentile (11 µg/L) is less than the MDEL (53 µg/L); and the mean (6.5 µg/L) is less than the long term averages of the projected lognormal distribution of the effluent data set after accounting for effluent variability (31 µg/L). Therefore, the Regional Water Board concludes that immediate compliance with final effluent limitations for copper is feasible.

[2] Near Field Mixing Zone and Dilution Analysis for the Delta Diablo Sanitation District Outfall Diffuser to New York Slough, December 17, 2008. Larry Walker Associates

(e) Antibacksliding. Antibacksliding requirements are satisfied because the previous Order did not include final effluent limitations for copper.

(2) Selenium

(a) Selenium WQO. The NTR for protection of aquatic life, 20 µg/L (acute) and 5.0 µg/L (chronic), establishes the most stringent WQO for selenium.

(b) RPA Results. This Order establishes effluent limitations for selenium because the MEC of 7.0 µg/L exceeds the WQO, demonstrating Reasonable Potential by Trigger 1.

(c) Selenium WQBELs. WQBELs for selenium, calculated according to SIP procedures (using a CV of 0.6) are an AMEL of 4.1 µg/L and an MDEL of 8.2 µg/L. No dilution credit is granted in because selenium is bioaccumulative and it is identified as an impairing pollutant in the Sacramento San Joaquin Delta on the 303(d) list.

(d) Immediate Compliance Feasible. It is immediately feasible for the Discharger to comply with WQBELS for selenium. Reasonable Potential was triggered by a series of unusually high results in May 2004. The cause of the high selenium levels was never discovered, but results since then have been consistently much lower and are below the WQBELs.

(e) Antibacksliding. Antibacksliding requirements are satisfied because the previous Order did not include final effluent limitations for selenium.

(3) Cyanide

(a) Cyanide WQO. The most stringent WQO for cyanide are an acute criterion of 9.4 µg/L and a chronic criterion of 2.9 µg/L. These site-specific objectives appear in Basin Plan Table 3-3C and were established by Regional Water Board Order No. R2-2006-0086 and approved by USEPA on July 22, 2008.

(b) RPA Results. This Order establishes effluent limitations for cyanide because the MEC of 9.7 µg/L exceeds the governing WQO of 2.9 µg/L, demonstrating Reasonable Potential by Trigger 1.

(c) Cyanide WQBELs. WQBELs for cyanide, calculated according to SIP procedures, are an AMEL of 18 µg/L and an MDEL of 45 µg/L. These limitations take into account the deep water nature of the discharge, and are therefore based on a minimum initial dilution of 10:1.

(d) Immediate Compliance Feasible. Statistical analysis of effluent data for cyanide collected over the period of August 2005 through July 2008 shows that the 95th percentile (5.3 µg/L) is less than the AMEL (18 µg/L); the 99th percentile (9.7 µg/L) is less than the MDEL (45 µg/L); and the mean (1.8 µg/L) is less than the long term average of the projected lognormal distribution of the effluent data set after accounting for effluent variability (9.0 µg/L). Based on this

analysis, the Regional Water Board concludes that immediate compliance with final WQBELs for cyanide is feasible.

(e) Antibacksliding. Antibacksliding requirements are satisfied because the previous Order did not include final effluent limitations for cyanide.

(4) Dioxin – TEQ

(a) Dioxin-TEQ WQO. The Basin Plan narrative WQO for bioaccumulative substances states:

> Many pollutants can accumulate on particulates, in sediments, or bioaccumulate in fish and other aquatic organisms. Controllable water quality factors shall not cause a detrimental increase in concentrations of toxic substances found in bottom sediments or aquatic life. Effects on aquatic organisms, wildlife, and human health will be considered.

Because it is the consensus of the scientific community that dioxins and furans associate with particulates, accumulate in sediments, and bioaccumulate in the fatty tissue of fish and other organisms, the Basin Plan's narrative bioaccumulation WQO applies to these pollutants. Elevated levels of dioxins and furans in fish tissue in San Francisco Bay demonstrate that the narrative bioaccumulation WQO is not being met. USEPA has therefore listed the Sacramento-San Joaquin Delta as impaired by dioxin and furan compounds in the current 303(d) listing of receiving waters.

The CTR establishes a numeric WQO for 2,3,7,8-tetrachlorodibenzo-p-dioxin (2,3,7,8-TCDD) of 1.3×10^{-8} µg/L for the protection of human health when water and aquatic organisms are consumed. When the CTR was promulgated, USEPA stated its support of the regulation of other dioxin and dioxin-like compounds through the use of toxicity equivalencies (TEQs) in NPDES permits. For California waters, USEPA stated specifically, "If the discharge of dioxin or dioxin-like compounds has reasonable potential to cause or contribute to a violation of a narrative criterion, numeric WQBELs for dioxin or dioxin-like compounds should be included in NPDES permits and should be expressed using a TEQ scheme" [65 Fed. Reg. 31682, 31695 (2000)]. This procedure, developed by the World Health Organization (WHO) in 1998, uses a set of toxicity equivalency factors (TEFs) to convert the concentration of any congener of dioxin or furan into an equivalent concentration of 2,3,7,8-TCDD. The CTR criterion is used as a criterion for dioxin-TEQ because dioxin-TEQ represents a toxicity weighted concentration equivalent to 2,3,7,8-TCDD, thus translating the narrative bioaccumulation objective into a numeric criterion.

To determine if the discharge of dioxin or dioxin-like compounds from the Delta Diablo Sanitation District facility has reasonable potential to cause or contribute to a violation of the Basin Plan's narrative bioaccumulation WQO, Regional Water Board staff used TEFs to express the measured concentrations of 16 dioxin congeners in effluent and background samples as 2,3,7,8-TCDD. These

"equivalent" concentrations were then compared to the CTR numeric criterion for 2,3,7,8-TCDD (1.3 x 10^{-8} µg/L). Although the 1998 WHO scheme includes TEFs for dioxin-like PCBs, they are not included in this Order's version of the TEF procedure because the CTR has established a specific water quality standard for dioxin-like PCBs and they are included in the analysis of total PCBs.

(b) RPA Results. This Order establishes effluent limitations for dioxin-TEQ because the MEC (1.3 x 10^{-7} µg/L) exceeds the applicable water quality criterion (1.3 x 10^{-8} µg/L), demonstrating Reasonable Potential by Trigger 1. The average background concentration of dioxin-TEQ at the Sacramento River RMP station (3.4 x 10^{-8} µg/L) also exceeds the applicable water quality criterion (Trigger 2).

(c) Dioxin-TEQ WQBELs. WQBELs for dioxin-TEQ, calculated using SIP procedures as guidance, with a CV of 1.4, are an AMEL of 1.3 x 10^{-8} µg/L and an MDEL of 3.7 x 10^{-8} µg/L. No dilution credit is granted in because dioxin-TEQ is bioaccumulative and it is identified as an impairing pollutant in the Sacramento San Joaquin Delta on the 303(d) list.

(d) Immediate Compliance Infeasible. The Discharger cannot immediately comply with the final WQBELs for dioxin-TEQ because statistical analysis of effluent data for dioxin-TEQ collected over the period of March 2004 through March 2008 shows that the 95th percentile (9.2 x 10^{-8} µg/L) is greater than the AMEL (1.3 x 10^{-8} µg/L), and the 99th percentile (1.2 x 10^{-7} µg/L) is greater than the MDEL (3.7 x 10^{-8} µg/L).

(e) Interim Effluent Limitation. Order R2-2003-0114 (as amended by Order R2-2004-027) did not include final effluent limitations for dioxin-TEQ. It contained a compliance schedules and a performance based interim limitation of 1.3 x 10^{-7} µg/L. The ten-year term of the compliance schedule is carried over from the previous permit and is to remain in effect until August 1, 2014, at which point the final effluent limitations will become effective. The compliance schedule is also based on a new interpretation of the narrative objective as authorized by State Water Board Resolution No. 2008-0025, *Policy for Compliance Schedules in National Pollutant Discharge Elimination System Permits*, which was approved by USEPA on August 27, 2008.

(f) Antibacksliding. Antibacksliding requirements are satisfied because the previous Order did not include final effluent limitations for dioxin-TEQ.

(5) Bromoform.

(a) Bromoform WQO. The most stringent applicable WQO for bromoform is the CTR criterion for protection of human health of 4.3 µg/L.

(b) RPA Results. This Order finds reasonable potential and thus establishes effluent limitations for bromoform because the MEC (5.0 µg/L) exceeds the most stringent applicable criterion (4.3 µg/L), demonstrating Reasonable Potential by Trigger 1.

(c) Bromoform WQBELs. WQBELs for bromoform, calculated according to SIP procedures, with a CV of 0.60 and a dilution credit of 10:1, are an AMEL of 39 µg/L and an MDEL of 77 µg/L.

(d) Immediate Compliance Feasible. With insufficient data to determine the distribution of the data set or to calculate a mean and standard deviation, feasibility to comply with final effluent limitations is determined by comparing the MEC (5 µg/L) to the AMEL (39 µg/L) and the MDEL (77 µg/L). Based on this comparison, the Regional Water Board concludes that immediate compliance with WQBELs is feasible.

(e) Antibacksliding. Antibacksliding requirements are satisfied because final limitations for bromoform are identical to those included in the previous Order.

(6) Chlorodibromomethane.

(a) Chlorodibromomethane WQO. The most stringent applicable WQO for chlorodibromomethane is the CTR criterion for protection of human health of 0.41 µg/L.

(b) RPA Results. This Order finds reasonable potential and thus establishes effluent limitations for chlorodibromomethane because the MEC (1.0 µg/L) exceeds the most stringent applicable criterion (0.41 µg/L), demonstrating Reasonable Potential by Trigger 1.

(c) Chlorodibromomethane WQBELs. WQBELs for chlorodibromomethane, calculated according to SIP procedures, with a CV of 0.60 and a dilution credit of 10:1, are an AMEL of 3.6 µg/L and an MDEL of 7.1 µg/L.

(d) Immediate Compliance Feasible. With insufficient data to determine the distribution of the data set or to calculate a mean and standard deviation, feasibility to comply with final effluent limitations is determined by comparing the MEC (1.0 µg/L) to the AMEL (3.6 µg/L) and the MDEL (7.1 µg/L). Based on this comparison, the Regional Water Board concludes that immediate compliance with WQBELs is feasible.

(e) Antibacksliding. Antibacksliding requirements are satisfied because final limitations for chlorodibromomethane are the same as those included in the previous Order.

(7) Methylene Chloride.

(a) Methylene Chloride WQO. The most stringent applicable WQO for methylene chloride is the CTR criterion for protection of human health of 4.7 µg/L.

(b) RPA Results. This Order finds reasonable potential and thus establishes effluent limitations for methylene chloride because the MEC (11 µg/L) exceeds the most stringent applicable criterion (4.7 µg/L), demonstrating Reasonable Potential by Trigger 1.

(c) Methylene Chloride WQBELs. WQBELs for methylene chloride, calculated according to SIP procedures, with a CV of 0.60 and a dilution credit of 10:1, are an AMEL of 43 µg/L and an MDEL of 85 µg/L.

(d) Immediate Compliance Feasible. With insufficient data to determine the distribution of the data set or to calculate a mean and standard deviation, feasibility to comply with the WQBELs is determined by comparing the MEC (11 µg/L) to the AMEL (43 µg/L) and the MDEL (85 µg/L). Based on this comparison, the Regional Water Board concludes that immediate compliance with these WQBELs is feasible.

(e) Antibacksliding. Antibacksliding requirements are satisfied because final limitations for methylene chloride were not included in the previous Order.

(8) Bis(2-ethylhexyl)phthalate.

(a) Bis(2-ethylhexyl)phthalate WQO. The most stringent applicable WQO for bis(2-ethylhexyl)phthalate is the CTR criterion for protection of human health of 1.8 µg/L.

(b) RPA Results. This Order finds reasonable potential and thus establishes effluent limitations for bis(2-ethylhexyl)phthalate because the MEC (6.6 µg/L) exceeds the most stringent applicable criterion (1.8 µg/L), demonstrating Reasonable Potential by Trigger 1.

(c) Bis(2-ethylhexyl)phthalate WQBELs. WQBELs for bis(2-ethylhexyl)phthalate, calculated according to SIP procedures, with a CV of 0.60 and a dilution credit of 10:1, are an AMEL of 12 µg/L and an MDEL of 24 µg/L.

(d) Immediate Compliance Feasible. With insufficient data to determine the distribution of the data set or to calculate a mean and standard deviation, feasibility to comply with the WQBELs is determined by comparing the MEC (6.6 µg/L) to the AMEL (12 µg/L) and the MDEL (24 µg/L). Based on this comparison, the Regional Water Board concludes that immediate compliance with these WQBELs is feasible.

(e) Antibacksliding. Antibacksliding requirements are satisfied because final limitations for bis(2-ethylhexyl)phthalate were not included in the previous Order.

(9) Total Ammonia.

(a) Ammonia WQO. The Basin Plan contains WQOs for un-ionized ammonia of 0.025 milligrams per liter (mg/L) as an annual median and 0.16 mg/L as a maximum north of the Golden Gate Channel. Regional Water Board staff translated these WQOs for un-ionized ammonia to equivalent total ammonia concentrations (as nitrogen) since (1) sampling and laboratory methods are not available to analyze for un-ionized ammonia; and (2) the fraction of total ammonia that exists in the toxic un-ionized form depends on the pH, salinity, and temperature of the receiving water. To translate the Basin Plan un-ionized

ammonia objectives, Regional Water Board staff used pH, salinity, and temperature data from 1994 through 2002 from the nearest RMP station to the outfall, the San Joaquin River station (BG30). Regional Water Board staff used the following equations to determine the fraction of total ammonia that would exist in the toxic, un-ionized form in the estuarine receiving water. [*Ambient Water Quality Criteria for Ammonia* (saltwater) – 1989, EPA Publication 440/5-88-004, USEPA, 1989]:

For salinity > 10 ppt: fraction of NH_3 = $\frac{1}{1+10^{(pK - pH)}}$

Where:

pK = 9.245 + 0.116*(I) + 0.0324*(298-T) + 0.0415*(P)/(T+273)
I = the molal ionic strength of saltwater = 19.9273*(S)/(1000-1.005109*S)
S = Salinity (parts per thousand)
T = Temperature in degrees Celsius
P = Pressure (one atmosphere)

To convert the Basin Plan's chronic un-ionized ammonia WQO to an equivalent total ammonia concentration, the median un-ionized ammonia fraction at the San Joaquin River monitoring station was used. To convert the Basin Plan's acute un-ionized ammonia WQO to an equivalent total ammonia concentration, the 90th percentile un-ionized ammonia fraction at the San Joaquin River station was used. Using the 90th percentile and median to express the acute and chronic un-ionized ammonia WQOs as equivalent total ammonia concentrations is consistent with USEPA guidance, as expressed by USEPA in *The Metals Translator: Guidance for Calculating a Total Recoverable Limit from a Dissolved Criterion* (EPA Publication Number 823-B-96-007, 1996). The equivalent total ammonia acute and chronic WQOs are 4.4 mg/L and 1.2 mg/L, respectively.

(b) RPA Results. This Order establishes effluent limitations for total ammonia because the MEC of 52 mg/L exceeds the translated WQO calculated above, demonstrating Reasonable Potential by Trigger 1.

(c) Ammonia WQBELs. To establish limitations for toxic pollutants, Basin Plan Section 4.5.5.2 indicates that WQBELs are to be calculated according to the SIP. Basin Plan Section 3.3.20 refers to ammonia as a toxic pollutant; therefore, it is consistent with the Basin Plan to use the SIP methodology to establish effluent limitations for ammonia. The total ammonia WQBELs were 210 mg/L AMEL and 260 mg/L MDEL, calculated according to SIP procedures as explained below.

To calculate total ammonia limits, some statistical adjustments were made because the Basin Plan's chronic WQO for un-ionized ammonia is based on an annual median, while chronic criteria are usually based on a 4-day average; also, the SIP assumes a monthly sampling frequency of 4 days per month to calculate effluent limitations based on chronic criteria. To use the SIP methodology to calculate effluent limits for a Basin Plan objective that is based on an annual

median, an averaging period of 365 days and a monitoring frequency of 30 days per month (the maximum daily sampling frequency in a month since the averaging period for a chronic criterion is longer than 30 days) were used. These statistical adjustments are supported by USEPA's *Water Quality Criteria; Notice of Availability; 1999 Update of Ambient Water Quality Criteria for Ammonia*; published on December 22, 1999, in the Federal Register.

Following the SIP methodology as guidance, Regional Water Board staff used the maximum ambient background total ammonia concentration to calculate effluent limitations based on the acute criterion and the median background total ammonia concentration to calculate effluent limitations based on the chronic criterion. Because the Basin Plan's chronic un-ionized ammonia objective is an annual median, the median background concentration is more representative of ambient conditions than a daily maximum.

The estimated actual dilution of 61:1 was used to calculate the final effluent limitations for ammonia because ammonia, a non-persistent pollutant, is quickly dispersed and degraded to a non-toxic state, and cumulative toxicity effects are unlikely. The Discharger used the model CORMIX to calculate the initial dilution using the average dry weather flow for chronic toxicity concerns and the maximum wet weather flow for acute toxicity concerns. The estimated actual dilutions (using a CV of 0.14) were 345:1 for calculating chronic limits and 61:1 for calculating acute limits. The final limits (210 mg/L AMEL, 260 mg/L MDEL) were based on acute criteria because they were lower than those based on the chronic criteria.

(d) Immediate Compliance Feasible. Immediate compliance with ammonia effluent limitations is feasible because statistical analysis of effluent data for total ammonia collected over the period of October 2005 through September 2008 shows that the 95th percentile (45 mg/L) is less than the AMEL (210 mg/L); the 99th percentile (49 mg/L) is less than the MDEL (260 mg/L).

(f) Antibacksliding. Antibacksliding requirements are satisfied because final limitations for total ammonia were not included in the previous Order.

e. Effluent Limit Calculations

Tables F-10a and F-10b show the WQBEL calculations for copper, selenium, cyanide, dioxin-TEQ, bromoform, chlorodibromomethane, methylene chloride, bis(2-ethylhexyl)phthalate, and total ammonia.

Table F-10a. Effluent Limit Calculations for Copper, Selenium, Cyanide, Dioxin-TEQ, and Bromoform

PRIORITY POLLUTANTS	**Copper**	**Selenium**	**Cyanide**	**Dioxin-TEQ**	**Bromoform**
Units	**µg/L**	**µg/L**	**µg/L**	**µg/L**	**µg/L**
Basin and Criteria Type	SSOs	NTR	SSOs	BP narrative	CTR HH
Criteria – Acute		20			
Criteria - Chronic		5			
SSO Criteria – Acute	3.9		9.4		
SSO Criteria – Chronic	2.5		2.9		
Water Effects Ratio (WER)	2.4	1	1	1	1
Lowest WQO		5.0	2.9	1.3E-08	4.3
Site Specific Translator – MDEL	0.66				
Site Specific Translator – AMEL	0.38				
Dilution Factor (D)	9	0	9	0	9
No of samples per month	4	4	4	4	4
Aq. life criteria analysis required?	Y	Y	Y	N	N
HH criteria analysis required?	N	Y	N	Y	N
Applicable Acute WQO	14	20	9.4		
Applicable Chronic WQO	16	5	2.9		
HH criteria			700	1.3E-08	4.3
Background(max for aq. life calc)	9.9	0.45	0.5	4.8E-08	
Background(ave for HH calc)			0.5	3.4E-08	0.5
Is pollutant on 303d list?	N	Y	N	Y	N
ECA acute	53	20	90		
ECA chronic	69	5.0	430		
ECA HH			7000	1.3E-08	39
No. of data points <10 or at least 80% of data ND?	N	N	N	N	Y
Average of effluent data	6.5	2.4	1.8	2.9E-08	
St. dev. of effluent data	1.6	1.4	1.8	4.0E-08	
CV calculated	0.24	0.6	1.0	1.4	N/A
CV selected – Final	0.24	0.6	1.0	1.4	0.6
ECA acute mult99	0.59	0.32	0.20		
ECA chronic mult99	0.76	0.53	0.37		

PRIORITY POLLUTANTS	**Copper**	**Selenium**	**Cyanide**	**Dioxin-TEQ**	**Bromoform**
Units	**µg/L**	**µg/L**	**µg/L**	**µg/L**	**µg/L**
LTA acute	31	6.4	18		
LTA chronic	53	2.6	9.0		
Minimum of LTAs	31	2.6	9.0		
AMEL mult95	1.2	1.6	2.0	2.3	1.6
MDEL mult99	1.7	3.1	5.0	6.5	3.1
AMEL aq life	38	4.1	18		
MDEL aq life	53	8.2	45		
MDEL/AMEL Multiplier	1.4	2.01	2.54	2.82	2.01
AMEL human health			7000	0	39
MDEL human health			18000	0	77
minimum of AMEL aq life vs. HH	38	4.1	18	0	39
minimum of MDEL aq life vs. HH	53	8.2	45	0	77
Current limit in permit (30 day ave)				1.3E-07 (interim)	39
Current limit in permit (daily)	16 (interim)		25 (interim)		77
Final limit – AMEL	**38**	**4.1**	**18**	**1.4E-08**	**39**
Final limit - MDEL	**53**	**8.2**	**45**	**3.9E-08**	**77**

Table F-10b. Effluent Limit Calculations for Chlorodibromomethane, Methylene Chloride, Bis(2-ethylhexyl)phthalate, and Total Ammonia.

PRIORITY POLLUTANT	**Chlorodibro-momethane**	**Methylene Chloride**	**Bis(2-ethylhexyl) phthalate**	**Total Ammonia Acute**	**Total Ammonia Chronic**
Units	**µg/L**	**µg/L**	**µg/L**	**mg/L N**	**mg/L N**
Basis and Criteria Type	CTR HH	CTR HH	CTR HH	BP aq. life	BP aq. life
Lowest WQO	0.41	4.7	1.8	4.43	1.22
Dilution Factor (D)	9	9	9	60	344
No of samples per month	4	4	4	4	30
Aq. life criteria analysis required?	N	N	N	Y	Y
HH criteria analysis required?	Y	Y	Y	N	N
Applicable Acute WQO				4.43	

PRIORITY POLLUTANT	**Chlorodibro-momethane**	**Methylene Chloride**	**Bis(2-ethylhexyl) phthalate**	**Total Ammonia Acute**	**Total Ammonia Chronic**
Units	**µg/L**	**µg/L**	**µg/L**	**mg/L N**	**mg/L N**
Applicable Chronic WQO					1.22
HH criteria	0.41	4.7	1.8		
Background (max for aq. life calc)				0.18	0.04
Background (ave for HH calc)	0.05	0.5	0.64		
Is pollutant on 303d list?	N	N	N	N	N
ECA acute				260	
ECA chronic					410
ECA HH	3.7	43	12		
No. of data points <10 or at least 80% of data ND?	Y	Y	Y	N	N
Ave. of effluent data				37	37
St. dev. of effluent data				5	5
CV calculated	N/A	N/A	N/A	0.14	0.14
CV selected – Final	0.60	0.60	0.60	0.14	0.14
ECA acute mult99				0.74	
ECA chronic mult99					0.98
LTA acute				190	
LTA chronic					400
AMEL mult95	1.6	1.6	1.6	1.1	1.0
MDEL mult99	3.1	3.1	3.1	1.4	1.4
AMEL aq life				210	420
MDEL aq life				260	540
MDEL/AMEL Multiplier	2.0	2.0	2.0		
AMEL human health	3.7	43	12		
MDEL human health	7.3	85	24		
Current limit in permit (30 day)	3.7				
Current limit in permit (daily)	7.3		46 (interim)		
Final limit – AMEL	**3.7**	**43**	**12**	**210**	**---**
Final limit – MDEL	**7.3**	**85**	**24**	**260**	**---**

5. Whole Effluent Acute Toxicity

The Basin Plan requires dischargers to either conduct flow-through effluent toxicity tests or perform static renewal bioassays (Chapter 4, Acute Toxicity) to measure the toxicity of wastewaters and to assess negative impacts upon water quality and beneficial uses caused by the aggregate toxic effect of the discharge of pollutants. This Order includes effluent limitations for whole effluent acute toxicity. Compliance evaluation is based on 96-hour static-renewal bioassays. All bioassays are to be performed according to the USEPA-approved method in 40 CFR Part 136, currently *"Methods for Measuring the Acute Toxicity of Effluents and Receiving Water, 5th Edition."*

6. Whole Effluent Chronic Toxicity

This permit includes requirements for chronic toxicity monitoring based on the Basin Plan narrative toxicity objective and the USEPA and State Water Board Task Force guidance. This permit includes the Basin Plan narrative toxicity objective as the applicable effluent limit, implemented via monitoring with numeric values as 'triggers' to initiate accelerated monitoring and to initiate a chronic toxicity reduction evaluation (TRE) as necessary. The permit requirements for chronic toxicity are also consistent with the CTR and SIP requirements. Accelerated monitoring is required after exceeding a single-sample maximum of 10 TUc, consistent with Basin Plan Table 4-5.

D. Anti-Backsliding and Anti-Degradation

1. **Effluent Limitations Retained from Order No. R2-2003-0114, as amended by Order No. R2-2004-027**. Limitations for the following parameters are retained and unchanged from the previous permit.

   - Oil and grease
   - pH
   - BOD_5 and TSS
   - Total residual chlorine
   - 85% removal requirement for BOD and TSS
   - Acute toxicity
   - Chronic toxicity
   - Bromoform
   - Chlorodibromomethane

   Retaining effluent limitations for these parameters in this Order ensures that these limitations are at least as stringent as those in Orders No. R2-2003-0114 and No. R2-2004-027, meeting applicable anti-backsliding and antidegradation requirements.

2. **Effluent Limitations Different than Order No. R2-2003-0114 (as amended by Order No. R2-2004-027**). Final, concentration-based limitations were calculated for the following parameters. These final limitations replace the interim limitations in the previous permit. The final limits for dioxin-TEQ become effective February 1, 2014.

- Copper
- Cyanide
- Bis(2-ethylhexyl)phthalate
- Dioxin-TEQ

The final effluent limitations for bis(2-ethylhexyl)phthalate and dioxin-TEQ are more stringent than the previous permit; therefore, they meet applicable anti-backsliding and antidegradation requirements. Although the new final limits for copper and cyanide are higher than the interim limits for these parameters in Order No. R2-2003-0114, performance-based interim limits and water quality-based final limits are not comparable for purposes of complying with antibacksliding requirements. Compliance with antidegradation requirements is discussed below.

The Regional Water Board has determined that implementation of the newly established SSOs for cyanide in San Francisco Bay is consistent with applicable antidegradation requirements. [See *Staff Report on Proposed Site-Specific Water Quality Objectives and Effluent Limit Policy for Cyanide for San Francisco Bay* (December 4, 2006).] This conclusion is based on assumed implementation of a Cyanide Action Plan. Provision VI.C.8 requires such a plan.

The final effluent limitation for copper is higher than the previous copper interim limitation. Nevertheless, the limit complies with antidegradation requirements. The standards-setting process for the SSOs addressed anti-degradation and concluded that water quality would not be degraded in establishing SSOs, based on the implementation of a Copper Action Plan. [See *Copper Site-Specific Objectives in San Francisco Bay: Proposed Basin Plan Amendment and Draft Staff Report* (June 6, 2007).] Provision VI.C.7 requires implementation of a Copper Action Plan. To ensure that the new copper limits that take effect immediately upon the effective date of the Order also comply with anti-degradation policies, implementation of the Copper Action Plan is required immediately upon the effective date of the Order.

3. **New Effluent Limitations**. Final, concentration-based limitations for the following parameters were not contained in Orders No. R2-2003-0114 and No. R2-2004-027, and are newly established by this Order.

- Selenium
- Methylene chloride
- Enterococcus bacteria
- Ammonia

The establishment of effluent limitations for these pollutants effectively creates limitations that are more stringent than in Order No. R2-2003-0114, as amended by Order No. R2-2004-027; therefore, these limits meet applicable anti-backsliding and antidegradation requirements.

The bacteriological limitations for enterococcus are established by this Order as alternate limitations to the total coliform bacteria limitations in the previous permit.

4. **Effluent Limitations Not Retained from Order No. R2-2003-0114, as amended by Order No. R2-2004-027.** Final limitations for the following parameters are not retained by this Order.

   - Settleable matter
   - Mercury
   - Lead
   - Nickel
   - Dichlorobromomethane
   - Aldrin
   - 4,4-DDE
   - Dieldrin
   - Total coliform bacteria

   This Order does not retain effluent limitations for settleable matter. As with other facilities achieving secondary or more advanced levels of treatment, compliance with the requirements of 40 CFR 133 and of Basin Plan Table 4-2 will ensure removal of settleable solids to equivalently low levels - below 0.1 mL/L-hr (30-day average) and 0.2 mL/L-hr (daily maximum).

   The previous permit included an interim effluent limitation for mercury. Mercury discharges to San Francisco Bay are now regulated by Regional Water Board Order No. R2-2007-0077, which became effective March 1, 2008. Order No. R2-2007-0077 is a watershed permit that implements the San Francisco Bay Mercury TMDL and establishes waste load allocations for industrial and municipal wastewater discharges of this pollutant. The Plant discharge of mercury is therefore regulated by another means. Order No. R2-2007-0077 was established in accordance with anti-backsliding and antidegradation requirements.

   Order No. R2-2003-0114, as amended by Order No. R2-2004-027, included final or interim effluent limitations for lead, nickel, dichlorobromomethane, aldrin, 4,4-DDE, and dieldrin. However, because the RPA showed that discharges from the Plant no longer demonstrate a reasonable potential to cause or contribute to exceedances of applicable water quality criteria for these pollutants, this Order does not retain these limitations. Elimination of WQBELs for these pollutants is consistent with State Water Board Order WQ 2001-16.

   Effluent limitations for total coliform bacteria are not retained by this permit, because a new, equivalently-protective enterococcus limitation is established.

E. Land Discharge Specifications

Not Applicable

F. Reclamation Specifications

Not Applicable.

V. RATIONALE FOR RECEIVING WATER LIMITATIONS

Receiving water limitations are retained from Order No. R2-2003-0114 and reflect applicable water quality standards from the Basin Plan.

VI. RATIONALE FOR MONITORING AND REPORTING REQUIREMENTS

The principal purposes of a monitoring program by a discharger are to:

- document compliance with waste discharge requirements and prohibitions established by the Regional Water Board;
- facilitate self-policing by the discharger in the prevention and abatement of pollution arising from waste discharge;
- develop or assist in the development of limitations, discharge prohibitions, national standards of performance, pretreatment and toxicity standards, and other standards; and
- prepare water and wastewater quality inventories.

The Monitoring and Reporting Program (MRP) is a standard requirement in almost all NPDES permits issued by the Regional Water Board, including this Order. It contains definitions of terms, specifies general sampling and analytical protocols, and sets out requirements for reporting of spills, violations, and routine monitoring data in accordance with NPDES regulations, the CWC, and Regional Water Board policies. The MRP also defines the sampling stations and frequency, the pollutants to be monitored, and additional reporting requirements. Pollutants to be monitored include all parameters for which effluent limitations are specified. Monitoring for additional constituents, for which no effluent limitations are established, is also required to provide data for future completion of RPAs for them.

A. Influent Monitoring

Influent monitoring requirements for BOD_5 and TSS allow determination of compliance with this Order's 85 percent removal requirement.

B. Effluent Monitoring

The MRP retains most effluent monitoring requirements from the previous permit. Changes in effluent monitoring are summarized as follows.

- Monitoring for settleable matter is no longer required, because the effluent limitation for this parameter has not been retained by this Order.
- Monthly routine monitoring for lead, nickel, dichlorobromomethane, aldrin, 4,4'-DDE, and dieldrin is no longer required because these pollutants no longer demonstrate reasonable potential. Monthly monitoring for mercury is no longer required because the discharge of mercury from the Plant is now regulated by Regional Water Board Order No. 2007-0077.

- Routine effluent monitoring for selenium, methylene chloride, and total ammonia (priority toxic pollutants with effluent limitations established by this Order) is established by this Order. Monitoring for all other priority toxic pollutants must be conducted in accordance with frequency and methods described in the August 6, 2001 Letter.

- Effluent monitoring for total coliform bacteria is no longer required, but monitoring for enterococcus bacteria has been established to reflect the change in effluent limitations from total coliform to enterococcus bacteria.

- The frequency of effluent monitoring for acute toxicity has been reduced from monthly to quarterly based on historical performance that indicates acute toxicity survival has been high and does not vary significantly from month to month.

- The frequency of effluent monitoring for chronic toxicity has been reduced from quarterly to semi-annually based on historical performance that indicates chronic toxicity survival has been high and does not vary significantly from quarter to quarter.

C. Receiving Water Monitoring

Receiving water monitoring requirements are unchanged from the previous permit. On April 15, 1992, the Regional Water Board adopted Resolution No. 92-043 directing the Executive Officer to implement the San Francisco Bay Regional Monitoring Program for Trace Substances, or RMP (RMP). Subsequent to a public hearing and various meetings, Regional Water Board staff requested under authority of CWC section 13267 that major permit holders in the San Francisco Bay region report on the water quality of the San Francisco Estuary. This Order specifies that the Discharger shall continue to participate in the RMP, which involves collection of data on pollutants and toxicity in water, sediment, and biota of the estuary.

D. Other Monitoring Requirements

1. **Pretreatment Requirements.** Pretreatment monitoring requirements for the influent, effluent, and biosolids are retained from the previous permit, and are required to assess compliance with the Discharger's USEPA approved pretreatment program.

2. **Biosolids Requirements.** Biosolids monitoring is required pursuant to 40 CFR Part 503.

VII. RATIONALE FOR PROVISIONS

A. Standard Provisions (Provision VI.A)

Standard Provisions, which in accordance with 40 CFR sections 122.41and 122.42 apply to all NPDES discharges and must be included in every NPDES permit, are provided in Attachments D and G through H of this Order.

B. Monitoring and Reporting Requirements (Provision VI.B)

The Discharger is required to monitor the permitted discharges in order to evaluate compliance with permit conditions. Monitoring requirements are contained in the MRP (Attachment E), Standard Provisions and SMP, Part A (Attachment G), of this Order. This provision requires compliance

with these documents and is based on 40 CFR 122.63. The Standard Provisions and SMP, Part A, are standard requirements in almost all NPDES permits issued by the Regional Water Board, including this Order. They contain definitions of terms, specify general sampling and analytical protocols, and set out requirements for reporting of spills, violations, and routine monitoring data in accordance with NPDES regulations, the CWC, and Regional Water Board's policies. The MRP contains a sampling program specific for the Plant. It defines the sampling stations and frequency, the pollutants to be monitored, and additional reporting requirements. Pollutants to be monitored include all parameters for which effluent limitations are specified. Monitoring for additional constituents, for which no effluent limitations are established, is also required to provide data for future completion of RPAs for them.

C. Special Provisions (Provision VI.C)

1. Reopener Provisions

These provisions are based on 40 CFR 123 and allow modification of this Order and its effluent limitations, as necessary, to respond to updated information.

2. Special Studies and Additional Monitoring Requirements

a. Effluent Characterization Study. This Order does not include effluent limitations for constituents addressed in the August 6, 2001, Letter that do not demonstrate Reasonable Potential, but this provision requires the Discharger to continue monitoring for these pollutants as described in the August 6, 2001 Letter and as specified in the MRP to provide date for future RPAs. If concentrations of these constituents increase significantly, this provision requites the Discharger to investigate the source of the increases and establish remedial measures if the increases result in reasonable potential to cause or contribute to an excursion above the applicable WQO. This provision is based on the Basin Plan and the SIP.

b. Ambient Background Receiving Water Study. This provision is based on the Basin Plan, the SIP, and the August 6, 2001, Letter for priority pollutant monitoring. As indicated in this Order, this requirement may be met by participating in a collaborative BACWA study.

3. Best Management Practices and Pollution Minimization Program

This provision is based on Basin Plan Chapter 4 and SIP Section 2.4.5.

4. Construction, Operation, and Maintenance Specifications

a. Wastewater Facilities, Review and Evaluation, Status Reports: This provision is based on Order No. R2-2003-0114 and the Basin Plan. See Section VI.C.4.a of this Order for specific requirements.

b. Operations and Maintenance Manual, Review and Status Reports: This provision is based on the Basin Plan, the requirements of 40 CFR 122, and Order No. R2-2003-0114. See Section VI.C.4.b of this Order for specific requirements.

c. Contingency Plan, Review and Status Reports: This provision is based on the Basin Plan, the requirements of 40 CFR 122, and Order No. R2-2003-0114. See Section VI.C.4.c of this Order for specific requirements.

5. Special Provisions for Municipal Facilities (POTWs Only)

a. Pretreatment Program. This provision is based on 40 CFR 403 and carried over from the previous permit.

b. Biosolids Management Practices Requirements: This provision is based on the Basin Plan (Chapter 4, Section 17), 40 CFR §§257, and 503 and the previous permit.

c. Sanitary Sewer Overflows and Sewer System Management Plan: This provision is to explain this Order's requirements as they relate to the Discharger's conveyance system, and to promote consistency with the State Water Board-adopted Statewide General Waste Discharge Requirements for Sanitary Sewer Overflow (SSO WDRs) and a related Monitoring and Reporting Program (Order No. 2006-0003-DWQ). The bases for these requirements are described elsewhere in this Fact Sheet (section IV.A.5). See Section VI.C.5.c of this Order for specific requirements of this provision.

6. Compliance Schedule

The compliance schedule and the requirement to submit reports on further measures to reduce concentrations of dioxin-TEQ to ensure compliance with final limits are based on State Water Board Resolution No. 2008-0025, *Policy for Compliance Schedules in National Pollutant Discharge Elimination System Permits*, which was approved by the U.S. EPA on August 27, 2008. This Order includes a compliance schedule and discharge specifications for dioxin-TEQ..

A maximum compliance schedule is reasonable for dioxin-TEQ, because of the considerable uncertainty in determining effective measures (e.g., pollution prevention, treatment upgrades) that should be implemented to ensure compliance with final limitations. In the Regional Water Board's view, it is appropriate to allow the Discharger sufficient time to explore source control measures before requiring it to propose further actions, such as Plant upgrades, that are likely to be much more costly. This approach is supported by the Basin Plan (section 4.13), which states, "In general, it is often more economical to reduce overall pollutant loading into treatment systems than to install complex and expensive technology at the Plant."

7. Copper Action Plan

This provision is required because the final effluent limitations for copper established by this Order are less stringent than the interim effluent limitation from the previous Order. Immediate implementation of the copper action plan is necessary to ensure that any increase in copper limitations is consistent with antidegradation policies. The copper action plan is therefore required immediately upon the effective date of the Order.

8. Cyanide Action Plan

The Basin Plan contains SSOs for cyanide for San Francisco Bay. Along with the cyanide SSOs, the Basin Plan requires that Cyanide Action Plans be implemented to ensure compliance with antidegradation policies.

9. Plant Expansion

This Provision requires tasks to ensure that the Plant can adequately treat the increased flows allowed by this Order.

VIII. PUBLIC PARTICIPATION

The San Francisco Bay Regional Water Board is considering the issuance of Waste Discharge Requirements (WDRs) that will serve as an NPDES permit for the Plant. As a step in the WDR adoption process, the Regional Water Board has developed tentative WDRs. The Regional Water Board encourages public participation in the WDR adoption process.

A. Notification of Interested Parties

The Regional Water Board has notified the Dischargers and interested agencies and persons of its intent to prescribe waste discharge requirements for the discharge and has provided them with an opportunity to submit their written comments and recommendations. Notification was provided through the Contra Costa Times**.**

B. Written Comments

The staff determinations are tentative. Interested persons are invited to submit written comments concerning these tentative WDRs. Comments must be submitted either in person or by mail to the attention of Vince Christian at the Regional Water Board at the address above on the cover page of this Order.

To be fully responded to by staff and considered by the Regional Water Board, written comments should be received at the Regional Water Board offices by 5:00 p.m. on February 10, 2009**.**

C. Public Hearing

The Regional Water Board will hold a public hearing on the tentative WDRs during its regular Board meeting on the following date and time and at the following location:

Date: March 11, 2009
Time: 9:00 am
Location: Elihu Harris State Office Building
1515 Clay Street, 1st Floor Auditorium
Oakland, CA 94612

Contact: Vince Christian, (510) 622-2336, email vchristian@waterboards.ca.gov

Interested persons are invited to attend. At the public hearing, the Regional Water Board will hear testimony, if any, pertinent to the discharge, WDRs, and permit. Oral testimony will be heard; however, for accuracy of the record, important testimony should be in writing.

Please be aware that dates and venues may change. Our Web address is http://www.waterboards.ca.gov/sanfranciscobay where you can access the current agenda for changes in dates and locations.

D. Waste Discharge Requirements Petitions

Any aggrieved person may petition the State Water Resources Control Board to review the decision of the Regional Water Board regarding the final WDRs. The petition must be submitted within 30 days of the Regional Water Board's action to the following address:

State Water Resources Control Board
Office of Chief Counsel
P.O. Box 100, 1001 I Street
Sacramento, CA 95812-0100

E. Information and Copying

The (ROWD), related documents, tentative effluent limitations and special provisions, comments received, and other information are on file and may be inspected at the address above at any time between 8:30 a.m. and 4:45 p.m., except from noon to 1:00 p.m., Monday through Friday. Copying of documents may be arranged through the Regional Water Board by calling 510-622-2300.

F. Register of Interested Persons

Any person interested in being placed on the mailing list for information regarding the WDRs and NPDES permit should contact the Regional Water Board, reference the Plant, and provide a name, address, and phone number.

G. Additional Information

Requests for additional information or questions regarding this order should be directed to Vince Christian at 510-622-2336 (e-mail at vchristian@waterboards.ca.gov).

ATTACHMENT H - PRETREATMENT REQUIREMENTS

Pretreatment Program Provisions

1. The Discharger shall implement all pretreatment requirements contained in 40 CFR 403, as amended. The Discharger shall be subject to enforcement actions, penalties, and fines as provided in the Clean Water Act (33 USC 1351 et seq.), as amended. The Discharger shall implement and enforce its Approved Pretreatment Program or modified Pretreatment Program as directed by the Board's Executive Officer or the EPA. The EPA and/or the State may initiate enforcement action against an industrial user for noncompliance with applicable standards and requirements as provided in the Clean Water Act.

2. The Discharger shall enforce the requirements promulgated under Sections 307(b), 307(c), 307(d) and 402(b) of the Clean Water Act. The Discharger shall cause industrial users subject to Federal Categorical Standards to achieve compliance no later than the date specified in those requirements or, in the case of a new industrial user, upon commencement of the discharge.

3. The Discharger shall perform the pretreatment functions as required in 40 CFR Part 403 and amendments or modifications thereto including, but not limited to:

    a. Implement the necessary legal authorities to fully implement the pretreatment regulations as provided in 40 CFR 403.8(f)(1);

    b. Implement the programmatic functions as provided in 40 CFR 403.8(f)(2);

    c. Publish an annual list of industrial users in significant noncompliance as provided per 40 CFR 403.8(f)(2)(vii);

    d. Provide for the requisite funding and personnel to implement the pretreatment program as provided in 40 CFR 403.8(f)(3); and

    e. Enforce the national pretreatment standards for prohibited discharges and categorical standards as provided in 40 CFR 403.5 and 403.6, respectively.

4. The Discharger shall submit annually a report to the EPA Region 9, the State Board and the Regional Water Board describing its pretreatment program activities over the previous twelve months. In the event that the Discharger is not in compliance with any conditions or requirements of the Pretreatment Program, the Discharger shall also include the reasons for noncompliance and a plan and schedule for achieving compliance. The report shall contain, but is not limited to, the information specified in Appendix A entitled, "Requirements for Pretreatment Annual Reports," which is made a part of this Order. The annual report is due on the last day of February each year.

5. The Discharger shall submit semiannual pretreatment reports to the EPA Region 9, the State Board and the Board describing the status of its significant industrial users (SIUs). The report shall contain, but not is limited to, the information specified in Appendix B entitled, "Requirements for Semiannual Pretreatment Reports," which is made part of this Order. The semiannual reports are due July 31st (for the period January through June) and January 31st (for the period July through December) of each year. The Executive Officer may exempt a Discharger from the semiannual

reporting requirements on a case by case basis subject to State Board and EPA's comment and approval.

6. The Discharger may combine the annual pretreatment report with the semiannual pretreatment report (for the July through December reporting period). The combined report shall contain all of the information requested in Appendices A and B and will be due on January 31st of each year.

7. The Discharger shall conduct the monitoring of the Plant's influent, effluent, and sludge as described in Appendix C entitled, "Requirements for Influent, Effluent and Sludge Monitoring," which is made part of this Order. The results of the sampling and analysis, along with a discussion of any trends, shall be submitted in the semiannual reports. A tabulation of the data shall be included in the annual pretreatment report. The Executive Officer may require more or less frequent monitoring on a case by case basis.

APPENDIX A

REQUIREMENTS FOR PRETREATMENT ANNUAL REPORTS

The Pretreatment Annual Report is due each year on the last day of February. [If the annual report is combined with the semiannual report (for the July through December period) the submittal deadline is January 31st of each year.] The purpose of the Annual Report is 1) to describe the status of the Publicly Owned Treatment Works (POTW) pretreatment program and 2) to report on the effectiveness of the program, as determined by comparing the results of the preceding year's program implementation. The report shall contain at a minimum, but is not limited to, the following information:

1. **Cover Sheet**

   The cover sheet must contain the name(s) and National Pollutant Discharge Elimination Discharge System (NPDES) permit number(s) of those POTWs that are part of the Pretreatment Program. Additionally, the cover sheet must include: the name, address and telephone number of a pretreatment contact person; the period covered in the report; a statement of truthfulness; and the dated signature of a principal executive officer, ranking elected official, or other duly authorized employee who is responsible for overall operation of the POTW (40 CFR 403.12(j)).

2. **Introduction**

   The Introduction shall include any pertinent background information related to the Discharger, the POTW and/or the industrial user base of the area. Also, this section shall include an update on the status of any Pretreatment Compliance Inspection (PCI) tasks, Pretreatment Performance Evaluation tasks, Pretreatment Compliance Audit (PCA) tasks, Cleanup and Abatement Order (CAO) tasks, or other pretreatment-related enforcement actions required by the Regional Water Board or the EPA. A more specific discussion shall be included in the section entitled, "Program Changes."

3. **Definitions**

   This section shall contain a list of key terms and their definitions that the Discharger uses to describe or characterize elements of its pretreatment program.

4. **Discussion of Upset, Interference and Pass Through**

   This section shall include a discussion of Upset, Interference or Pass Through incidents, if any, at the POTW(s) that the Discharger knows of or suspects were caused by industrial discharges. Each incident shall be described, at a minimum, consisting of the following information:

   a. a description of what occurred;

   b. a description of what was done to identify the source;

   c. the name and address of the IU responsible

   d. the reason(s) why the incident occurred;

   e. a description of the corrective actions taken; and

f. an examination of the local and federal discharge limits and requirements for the purposes of determining whether any additional limits or changes to existing requirements may be necessary to prevent other Upset, Interference or Pass Through incidents.

5. Influent, Effluent and Sludge Monitoring Results

This section shall provide a summary of the analytical results from the "Influent, Effluent and Sludge Monitoring" as specified in Appendix C. The results should be reported in a summary matrix that lists monthly influent and effluent metal results for the reporting year.

A graphical representation of the influent and effluent metal monitoring data for the past five years shall also be provided with a discussion of any trends.

6. Inspection and Sampling Program

This section shall contain at a minimum, but is not limited to, the following information:

a. Inspections: the number of inspections performed for each type of IU; the criteria for determining the frequency of inspections; the inspection format procedures;

b. Sampling Events: the number of sampling events performed for each type of IU; the criteria for determining the frequency of sampling; the chain of custody procedures.

7. Enforcement Procedures

This section shall provide information as to when the approved Enforcement Response Plan (ERP) had been formally adopted or last revised. In addition, the date the finalized ERP was submitted to the Regional Water Board shall also be given.

8. Federal Categories

This section shall contain a list of all of the federal categories that apply to the Discharger. The specific category shall be listed including the subpart and 40 CFR section that applies. The maximum and average limits for the each category shall be provided. This list shall indicate the number of Categorical Industrial Users (CIUs) per category and the CIUs that are being regulated pursuant to the category. The information and data used to determine the limits for those CIUs for which a combined waste stream formula is applied shall also be provided.

9. Local Standards

This section shall include a table presenting the local limits.

10. Updated List of Regulated SIUs

This section shall contain a complete and updated list of the Discharger's Significant Industrial Users (SIUs), including their names, addresses, and a brief description of the individual SIU's type of business. The list shall include all deletions and additions keyed to the list as submitted in the previous annual report. All deletions shall be briefly explained.

11. Compliance Activities

a. Inspection and Sampling Summary: This section shall contain a summary of all the inspections and sampling activities conducted by the Discharger over the past year to gather information and data regarding the SIUs. The summary shall include:

(1) the number of inspections and sampling events conducted for each SIU;

(2) the quarters in which these activities were conducted; and

(3) the compliance status of each SIU, delineated by quarter, and characterized using all applicable descriptions as given below:

(a) in consistent compliance;

(b) in inconsistent compliance;

(c) in significant noncompliance;

(d) on a compliance schedule to achieve compliance, (include the date final compliance is required);

(e) not in compliance and not on a compliance schedule;

(f) compliance status unknown, and why not.

b. Enforcement Summary: This section shall contain a summary of the compliance and enforcement activities during the past year. The summary shall include the names of all the SIUs affected by the following actions:

(1) Warning letters or notices of violations regarding SIUs' apparent noncompliance with or violation of any federal pretreatment categorical standards and/or requirements, or local limits and/or requirements. For each notice, indicate whether it was for an infraction of a federal or local standard/limit or requirement.

(2) Administrative Orders regarding the SIUs' apparent noncompliance with or violation of any federal pretreatment categorical standards and/or requirements, or local limits and/or requirements. For each notice, indicate whether it was for an infraction of a federal or local standard/limit or requirement.

(3) Civil actions regarding the SIUs' apparent noncompliance with or violation of any federal pretreatment categorical standards and/or requirements, or local limits and/or requirements. For each notice, indicate whether it was for an infraction of a federal or local standard/limit or requirement.

(4) Criminal actions regarding the SIUs' apparent noncompliance with or violation of any federal pretreatment categorical standards and/or requirements, or local limits and/or requirements. For each notice, indicate whether it was for an infraction of a federal or local standard/limit or requirement.

(5) Assessment of monetary penalties. Identify the amount of penalty in each case and reason for assessing the penalty.

(6) Order to restrict/suspend discharge to the POTW.

(7) Order to disconnect the discharge from entering the POTW.

12. Baseline Monitoring Report Update

This section shall provide a list of CIUs that have been added to the pretreatment program since the last annual report. This list of new CIUs shall summarize the status of the respective Baseline Monitoring Reports (BMR). The BMR must contain all of the information specified in 40 CFR 403.12(b). For each of the new CIUs, the summary shall indicate when the BMR was due; when the CIU was notified by the POTW of this requirement; when the CIU submitted the report; and/or when the report is due.

13. Pretreatment Program Changes

This section shall contain a description of any significant changes in the Pretreatment Program during the past year including, but not limited to: legal authority, local limits, monitoring/ inspection program and frequency, enforcement protocol, program's administrative structure, staffing level, resource requirements and funding mechanism. If the manager of the pretreatment program changes, a revised organizational chart shall be included. If any element(s) of the program is in the process of being modified, this intention shall also be indicated.

14. Pretreatment Program Budget

This section shall present the budget spent on the Pretreatment Program. The budget, either by the calendar or fiscal year, shall show the amounts spent on personnel, equipment, chemical analyses and any other appropriate categories. A brief discussion of the source(s) of funding shall be provided.

15. Public Participation Summary

This section shall include a copy of the public notice as required in 40 CFR 403.8(f)(2)(vii). If a notice was not published, the reason shall be stated.

16. Sludge Storage and Disposal Practice

This section shall have a description of how the treated sludge is stored and ultimately disposed. The sludge storage area, if one is used, shall be described in detail. Its location, a description of the containment features and the sludge handling procedures shall be included.

17. PCS Data Entry Form

The annual report shall include the PCS Data Entry Form. This form shall summarize the enforcement actions taken against SIUs in the past year. This form shall include the following information: the POTW name, NPDES Permit number, period covered by the report, the number of SIUs in significant noncompliance (SNC) that are on a pretreatment compliance schedule, the

number of notices of violation and administrative orders issued against SIUs, the number of civil and criminal judicial actions against SIUs, the number of SIUs that have been published as a result of being in SNC, and the number of SIUs from which penalties have been collected.

18. Other Subjects

Other information related to the Pretreatment Program that does not fit into one of the above categories should be included in this section.

Signed copies of the reports shall be submitted to the Regional Administrator at USEPA, the State Water Resources Control Board and the Regional Water Board at the following addresses:

Regional Administrator
United States Environmental Protection Agency
Region 9, Mail Code: WTR-7
Clean Water Act Compliance Office
Water Division
75 Hawthorne Street
San Francisco, CA 94105

Pretreatment Program Manager
Regulatory Unit
State Water Resources Control Board
Division of Water Quality
1001 I Street
Sacramento, CA 95814

Pretreatment Coordinator
NPDES Permits Division
SF Bay Regional Water Quality Control Board
1515 Clay Street, Suite 1400
Oakland, CA 94612

APPENDIX B:

REQUIREMENTS FOR SEMIANNUAL PRETREATMENT REPORTS

The semiannual pretreatment reports are due on July 31 (for pretreatment program activities conducted from January through June) and January 31 (for pretreatment activities conducted from July through December) of each year, unless an exception has been granted by the Board's Executive Officer. The semiannual reports shall contain, at a minimum, but is not limited to, the following information:

1. Influent, Effluent and Sludge Monitoring

The influent, effluent and sludge monitoring results shall be included in the report. The analytical laboratory report shall also be included, with the QA/QC data validation provided upon request. A description of the sampling procedures and a discussion of the results shall be given. (Please see Appendix C for specific detailed requirements.) The contributing source(s) of the parameters that exceed NPDES limits shall be investigated and discussed. In addition, a brief discussion of the contributing source(s) of all organic compounds identified shall be provided.

The Discharger has the option to submit all monitoring results via an electronic reporting format approved by the Executive Officer. The procedures for submitting the data will be similar to the electronic submittal of the NPDES self-monitoring reports as outlined in the December 17, 1999 Regional Water Board letter, Official Implementation of Electronic Reporting System (ERS). The Discharger shall contact the Regional Water Board's ERS Project Manager for specific details in submitting the monitoring data.

If the monitoring results are submitted electronically, the analytical laboratory reports (along with the QA/QC data validation) should be kept at the Discharger's facility.

2. Industrial User Compliance Status

This section shall contain a list of all Significant Industrial Users (SIUs) that were not in consistent compliance with all pretreatment standards/limits or requirements for the reporting period. The compliance status for the previous reporting period shall also be included. Once the SIU has determined to be out of compliance, the SIU shall be included in the report until consistent compliance has been achieved. A brief description detailing the actions that the SIU undertook to come back into compliance shall be provided.

For each SIU on the list, the following information shall be provided:

a. Indicate if the SIU is subject to Federal categorical standards; if so, specify the category including the subpart that applies.

b. For SIUs subject to Federal Categorical Standards, indicate if the violation is of a categorical or local standard.

c. Indicate the compliance status of the SIU for the two quarters of the reporting period.

d. For violations/noncompliance occurring in the reporting period, provide (1) the date(s) of violation(s); (2) the parameters and corresponding concentrations exceeding the limits and the discharge limits for these parameters and (3) a brief summary of the noncompliant event(s) and the steps that are being taken to achieve compliance.

3. POTW's Compliance with Pretreatment Program Requirements

This section shall contain a discussion of the Discharger's compliance status with the Pretreatment Program Requirements as indicated in the latest Pretreatment Compliance Audit (PCA) Report, Pretreatment Compliance Inspection (PCI) Report or Pretreatment Performance Evaluation (PPE) Report. It shall contain a summary of the following information:

a. Date of latest PCA, PCI or PPE and report.

b. Date of the Discharger's response.

c. List of unresolved issues.

d. Plan and schedule for resolving the remaining issues.

The reports shall be signed by a principal executive officer, ranking elected official, or other duly authorized employee who is responsible for the overall operation of the Publicly Owned Treatment Works (POTW)(40 CFR 403.12(j)). Signed copies of the reports shall be submitted to the Regional Administrator at USEPA, the State Water Board and the Regional Water Board at the following addresses:

Regional Administrator
United States Environmental Protection Agency
Region 9, Mail Code: WTR-7
Clean Water Act Compliance Office
Water Division
75 Hawthorne Street
San Francisco, CA 94105

Pretreatment Program Manager
Regulatory Unit
State Water Resources Control Board
Division of Water Quality
1001 I Street
Sacramento, CA 95814

Pretreatment Coordinator
NPDES Permits Division
SF Bay Regional Water Quality Control Board
1515 Clay Street, Suite 1400
Oakland, CA 94612

APPENDIX C

REQUIREMENTS FOR INFLUENT, EFFLUENT AND SLUDGE MONITORING

The Discharger shall conduct sampling of the Plant's influent, effluent and sludge at the frequency as shown in Table E-5 of the Self-Monitoring Program (SMP).

The monitoring and reporting requirements of the POTW's Pretreatment Program are in addition to those specified in Tables E-3 and E-4 of the SMP. Any subsequent modifications of the requirements specified in Tables E-3 and E-4 shall be adhered to and shall not affect the requirements described in this Appendix unless written notice from the Regional Water Board is received. When sampling periods coincide, one set of test results, reported separately, may be used for those parameters that are required to be monitored by both Table E-5 and the Pretreatment Program. The Pretreatment Program monitoring reports shall be sent to the Pretreatment Program Coordinator.

1. Influent and Effluent Monitoring

The Discharger shall monitor for the parameters using the required test methods listed in Tables E-3 and E-4 of the SMP. Any test method substitutions must have received prior written Regional Water Board approval. Influent and Effluent sampling locations shall be the same as those sites specified in the Self-Monitoring Program.

The influent and effluent sampled should be taken during the same 24-hour period. All samples must be representative of daily operations. A grab sample shall be used for volatile organic compounds, cyanide and phenol. In addition, any samples for oil and grease, polychlorinated biphenyls, dioxins/furans, and polynuclear aromatic hydrocarbons shall be grab samples. For all other pollutants, 24-hour composite samples must be obtained through flow-proportioned composite sampling. Sampling and analysis shall be performed in accordance with the techniques prescribed in 40 CFR Part 136 and amendments thereto. For effluent monitoring, the reporting limits for the individual parameters shall be at or below the minimum levels (MLs) as stated in the Policy for Implementation of Toxics Standards for Inland Surface Waters, Enclosed Bays, and Estuaries of California (2000) [also known as the State Implementation Policy (SIP)]; any revisions to the MLs shall be adhered to. If a parameter does not have a stated minimum level, then the Discharger shall conduct the analysis using the lowest commercially available and reasonably achievable detection levels.

The following standardized report format should be used for submittal of the influent and effluent monitoring report. A similar structured format may be used but will be subject to Regional Water Board approval. The monitoring reports shall be submitted with the Semiannual Reports.

a. Sampling Procedures – This section shall include a brief discussion of the sample locations, collection times, how the sample was collected (i.e., direct collection using vials or bottles, or other types of collection using devices such as automatic samplers, buckets, or beakers), types of containers used, storage procedures and holding times. Include description of prechlorination and chlorination/dechlorination practices during the sampling periods.

b. Method of Sampling Dechlorination – A brief description of the sample dechlorination method prior to analysis shall be provided.

c. Sample Compositing – The manner in which samples are composited shall be described. If the compositing procedure is different from the test method specifications, a reason for the variation shall be provided.

d. Data Validation – All quality assurance/quality control (QA/QC) methods to be used shall be discussed and summarized. These methods include, but are not limited to, spike samples, split samples, blanks and standards. Ways in which the QA/QC data will be used to qualify the analytical test results shall be identified. A certification statement shall be submitted with this discussion stating that the laboratory QA/QC validation data has been reviewed and has met the laboratory acceptance criteria. The QA/QC validation data shall be submitted to the Regional Water Board upon request.

e. A tabulation of the test results shall be provided.

f. Discussion of Results – The report shall include a complete discussion of the test results. If any pollutants are detected in sufficient concentration to upset, interfere or pass through Plant operations, the type of pollutant(s) and potential source(s) shall be noted, along with a plan of action to control, eliminate, and/or monitor the pollutant(s). Any apparent generation and/or destruction of pollutants attributable to chlorination/dechlorination sampling and analysis practices shall be noted.

2. Sludge Monitoring

Sludge should be sampled in the same 24-hour period during which the influent and effluent are sampled except as noted in (C) below. The same parameters required for influent and effluent analysis shall be included in the sludge analysis. The sludge analyzed shall be a composite sample of the sludge for final disposal consisting of:

a. Sludge lagoons – 20 grab samples collected at representative equidistant intervals (grid pattern) and composited as a single grab, or

b. Dried stockpile – 20 grab samples collected at various representative locations and depths and composited as a single grab, or

c. Dewatered sludge- daily composite of 4 representative grab samples each day for 5 days taken at equal intervals during the daily operating shift taken from a) the dewatering units or b) from each truckload, and shall be combined into a single 5-day composite.

The U.S. EPA manual, POTW Sludge Sampling and Analysis Guidance Document, August 1989, containing detailed sampling protocols specific to sludge is recommended as a guidance for sampling procedures. The U.S. EPA manual Analytical Methods of the National Sewage Sludge Survey, September 1990, containing detailed analytical protocols specific to sludge, is recommended as a guidance for analytical methods.

In determining if the sludge is a hazardous waste, the Dischargers shall adhere to Article 2, "Criteria for Identifying the Characteristics of Hazardous Waste," and Article 3, "Characteristics of Hazardous Waste," of Title 22, California Code of Regulations, Sections 66261.10 to 66261.24 and all amendments thereto.

Sludge monitoring reports shall be submitted with the appropriate Semiannual Report. The following standardized report format should be used for submittal of the report. A similarly structured form may be used but will be subject to Regional Water Board approval.

a. Sampling procedures – Include sample locations, collection procedures, types of containers used, storage/refrigeration methods, compositing techniques and holding times. Enclose a map of sample locations if sludge lagoons or stockpiled sludge is sampled.

b. Data Validation – All quality assurance/quality control (QA/QC) methods to be used shall be discussed and summarized. These methods include, but are not limited to, spike samples, split samples, blanks and standards. Ways in which the QA/QC data will be used to qualify the analytical test results shall be identified. A certification statement shall be submitted with this discussion stating that the laboratory QA/QC validation data has been reviewed and has met the laboratory acceptance criteria. The QA/QC validation data shall be submitted to the Regional Water Board upon request.

c. Test Results – Tabulate the test results and include the percent solids.

d. Discussion of Results – The report shall include a complete discussion of test results. If the detected pollutant(s) is reasonably deemed to have an adverse effect on sludge disposal, a plan of action to control, eliminate, and/or monitor the pollutant(s) and the known or potential source(s) shall be included. Any apparent generation and/or destruction of pollutants attributable to chlorination/ dechlorination sampling and analysis practices shall be noted.

The Discharger shall also provide any influent, effluent or sludge monitoring data for nonpriority pollutants that the permittee believes may be causing or contributing to Interference, Pass Through or adversely impacting sludge quality.