Linda S. Adams
Secretary for
Environmental Protection

California Regional Water Quality Control Board

San Francisco Bay Region

1515 Clay Street, Suite 1400, Oakland CA 94612
(510) 622-2300 • Fax (510) 622-2460
http://www.waterboards.ca.gov/sanfranciscobay

Arnold Schwarzenegger
Governor

ORDER NO. R2-2010-0096
NPDES NO. CA0029122

The following Discharger is subject to waste discharge requirements set forth in this Order.

Table 1. Discharger Information

Discharger	GWF Power Systems, L.P.
Name of Facility	Nichols Road (Site V) Power Plant
Facility Address	555 Nichols Road
	Bay Point, CA 94565
	Contra Costa County
The U.S. Environmental Protection Agency (USEPA) and the Regional Water Quality Control Board have classified this discharge as a **minor** discharge.	

Discharges by GWF Power Systems, L.P. from the discharge point identified below are subject to waste discharge requirements as set forth in this Order.

Table 2. Discharge Locations

Discharge Point	Effluent Description	Discharge Point Latitude	Discharge Point Longitude	Receiving Water
001	Cooling Tower Blowdown	38° 03' 15"	121° 59' 15"	Suisun Bay

Table 3. Administrative Information

This Order was adopted by the Regional Water Board on:	**July 14, 2010**
This Order shall become effective on:	**September 1, 2010**
This Order shall expire on:	**August 31, 2015**
The Discharger shall file a Report of Waste Discharge in accordance with Title 23, California Code of Regulations, as application for issuance of new waste discharge requirements no later than:	**180 days prior to the Order expiration date**

I, Bruce H. Wolfe, Executive Officer, do hereby certify that this Order with all attachments is a full, true, and correct copy of an Order adopted by the California Regional Water Quality Control Board, San Francisco Bay Region, on the date shown above.

Digitally signed by Bruce Wolfe
Date: 2010.07.15 19:19:14 -07'00'

Bruce H. Wolfe, Executive Officer

Table of Contents

I. Facility Information....3
II. Findings....3
III. Discharge Prohibitions....8
IV. Effluent Limitations and Discharge Specifications....8
V. Receiving Water Limitations....10
VI. Groundwater Limitations....11
VII. Provisions....11
VIII Compliance Determination....17

Appendix A – Definitions

Appendix B – Site Map

Appendix C – Flow Schematic

Appendix D – Federal Standard Provisions

Appendix E – Monitoring and Reporting Program

Appendix F – Fact Sheet

Appendix G – Regional Standard Provisions

List of Tables

Table 1. Discharger Information....1
Table 2. Discharge Locations....1
Table 3. Administrative Information....1
Table 4. Facility Information....3
Table 5. Basin Plan Beneficial Uses of Suisun Bay....5
Table 6. Effluent Limitations for Technology-Based Pollutants....9
Table 7. Effluent Limitations for Toxic Pollutants....9
Table 8. Copper Action Plan....15
Table 9. Cyanide Action Plan....17
Table 10. Dilution Study....17

I. FACILITY INFORMATION

The following Discharger is subject to the waste discharge requirements set forth in this Order:

Table 4. Facility Information

Discharger	GWF Power Systems, L.P.
Name of Facility	Nichols Road (Site V) Power Plant
Facility Address	555 Nichols Road
	Bay Point, CA 94565
	Contra Costa County
Facility Contact, Title, and Phone	Mark Kehoe, Director of Environmental and Safety Programs, 925-431-1440
Mailing Address	4300 Railroad Avenue Pittsburg, CA 94565
Type of Facility	Power Plant
Facility Design Flow	0.125 million gallons per day (MGD) maximum, 0.053 MGD average

II. FINDINGS

The California Regional Water Quality Control Board, San Francisco Bay Region (hereinafter the Regional Water Board), finds:

A. Background. GWF Power Systems, L.P. (hereinafter the Discharger) is currently discharging under Order No. R2-2005-0019, as amended by Order No. R2-2010-0058 and National Pollutant Discharge Elimination System (NPDES) Permit No. CA0029122. The Discharger submitted a Report of Waste Discharge, dated September 18, 2009, and applied for reissuance of its NPDES permit to discharge up to 0.125 MGD of cooling tower blowdown from its Nichols Road (Site V) Power Plant (hereinafter the Plant). The Discharger's discharge is also currently covered under Order No. R2-2007-0077 (NPDES Permit CA0038849), which supersedes all requirements on mercury from wastewater discharges in the region. The mercury permit is unaffected by this Order.

For the purposes of this Order, references to the "discharger" or "permittee" in applicable federal and State laws, regulations, plans, or policy are held to be equivalent to references to the Discharger herein.

B. Facility Description. The Discharger owns and operates a power plant capable of producing approximately 18.2 megawatts of electricity. Steam is generated by the combustion of petroleum coke in a fluidized bed. The superheated steam expands through a turbine, producing electricity. The steam is then condensed and recycled back to the boiler. Most of the water at the Plant is used by the cooling tower. About 5.6 gallons per minute (gpm) of hot water from the boiler/condenser loop

(boiler blowdown) is mixed with the water in the cooling tower. The cooling tower cools the water by continuously circulating about 12,000 gpm of water over a tower about 40 feet tall. The water is spread out into a thin layer at the top of the tower and is allowed to fall over baffles, cooling the water through evaporation on its way to a reservoir at the bottom. About 204 gpm is lost through evaporation in the tower and about 37 gpm of cooling tower blowdown is discharged to Suisun Bay through a deep-water outfall. About 241 gpm of source water (50% municipal drinking water supplied by Cal Cities Water and 50% untreated water from the Contra Costa Canal) is sent to the cooling tower to make up for the water lost through evaporation and discharge. The cooling tower also receives about 10 gpm of reverse osmosis reject water and about 0.15 gpm of auxiliary cooling water, equipment washdown water, and storm water. The Discharger adds a microbicide, a dispersant, a corrosion inhibitor, and a water conditioner to the boiler.

The Discharger collects and uses most of the storm water that falls on site for cooling water (about 95%) and discharges very little to the storm drains. The Discharger is covered under the Statewide General Permit for Industrial Stormwater Discharges (NPDES General Permit CAS000001). The Discharger has developed and maintains a Stormwater Pollution Prevention Plan.

Attachment B provides a map of the area around the Plant. Attachment C provides a flow schematic of the Plant.

C. Legal Authorities. This Order is issued pursuant to Clean Water Act (CWA) section 402 and implements regulations adopted by the U. S. Environmental Protection Agency (USEPA) and Chapter 5.5, Division 7, of the California Water Code (CWC) (commencing with section 13370). It shall serve as an NPDES permit for point source discharges from the Plant to surface waters. This Order also serves as Waste Discharge Requirements (WDRs) pursuant to Article 4, Chapter 4, Division 7, of the CWC (commencing with section 13260).

D. Background and Rationale for Requirements. The Regional Water Board developed the requirements in this Order based on information submitted as part of the application, through monitoring and reporting programs, and other available information. The Fact Sheet (Attachment F), which contains background information and rationale for the requirements of this Order, is hereby incorporated into this Order and constitutes part of the findings for this Order. Attachments A through E and G are also incorporated into this Order.

E. California Environmental Quality Act (CEQA). Under CWC section 13389, this action to adopt an NPDES permit is exempt from the provisions of CEQA.

F. Technology-Based Effluent Limitations. CWA section 301(b) and NPDES regulations at 40 CFR 122.44 require that permits include conditions meeting applicable technology-based requirements at minimum, and any more stringent

effluent limitations necessary to meet applicable water quality standards. The discharge authorized by this Order must meet minimum federal technology-based requirements based on Secondary Treatment Standards at 40 CFR 423. A detailed discussion of technology-based effluent limitation development is included in the Fact Sheet.

G. Water Quality-Based Effluent Limitations. CWA section 301(b) and 40 CFR 122.44(d) require that permits include limitations more stringent than applicable federal technology-based requirements where necessary to achieve applicable water quality standards. 40 CFR 122.44(d)(1)(i) mandates that permits include effluent limitations for all pollutants that are or may be discharged at levels that have the reasonable potential to cause or contribute to an exceedance of a water quality standard, including numeric and narrative objectives within a standard.

H. Water Quality Control Plans. *The Water Quality Control Plan for the San Francisco Bay Basin* (hereinafter the Basin Plan) is the Regional Water Board's master water quality control planning document. It designates beneficial uses and water quality objectives for waters of the State, including surface waters and groundwater. It also includes programs of implementation to achieve water quality objectives. The Basin Plan was duly adopted by the Regional Water Board and approved by the State Water Resources Control Board (State Water Board), USEPA, and the Office of Administrative Law, as required. Requirements of this Order implement the Basin Plan. Beneficial uses of Suisun Bay are listed in Table 5 below.

Table 5. Beneficial Uses of Suisun Bay

Receiving Water Name	Beneficial Uses
Suisun Bay	Ocean, Commercial, and Sport Fishing (COMM) Industrial Service Supply (IND) Industrial Process Supply (PROC) Estuarine Habitat (EST) Fish Spawning (SPWN) Wildlife Habitat (WILD) Water Contact Recreation (REC1) Non-Contact Water Recreation (REC2) Navigation (NAV) Fish Migration (MIGR) Preservation of Rare and Endangered Species (RARE)

I. Thermal Plan. The State Water Board adopted a Water Quality Control Plan for the Control of Temperature in Coastal and Interstate Water and Enclosed Bays and Estuaries of California (Thermal Plan) on May 18, 1972, and amended this plan on September 18, 1975. This plan contains temperature objectives for surface waters. Requirements of this Order implement the Thermal Plan.

J. National Toxics Rule (NTR) and California Toxics Rule (CTR). USEPA adopted the NTR on December 22, 1992, and later amended it on May 4, 1995, and November 9, 1999. About 40 criteria in the NTR apply in California. On May 18, 2000, USEPA adopted the CTR. The CTR promulgated new toxics criteria for California and, in addition, incorporated the previously adopted NTR criteria that applied in the State. The State Water Board amended the CTR on February 13, 2001. These rules contain water quality criteria for priority pollutants.

K. State Implementation Policy. On March 2, 2000, the State Water Board adopted the *Policy for Implementation of Toxics Standards for Inland Surface Waters, Enclosed Bays, and Estuaries of California* (State Implementation Policy or SIP). The SIP became effective on April 28, 2000, with respect to the priority pollutant criteria USEPA promulgated for California through the NTR and the priority pollutant objectives the Regional Water Board established in the Basin Plan. The SIP became effective on May 18, 2000, with respect to the priority pollutant criteria USEPA promulgated through the CTR. The State Water Board adopted amendments to the SIP on February 24, 2005, which became effective on July 13, 2005. The SIP establishes implementation provisions for priority pollutant objectives and provisions for chronic toxicity control. Requirements of this Order implement the SIP.

L. Alaska Rule. On March 30, 2000, USEPA revised its regulation that specifies when new and revised state and tribal water quality standards become effective for CWA purposes. [65 Fed. Reg. 24641 (April 27, 2000) (codified at 40 CFR 131.21)]. Under the revised regulation (also known as the Alaska Rule), new and revised standards submitted to USEPA after May 30, 2000, must be approved by USEPA before being used for CWA purposes. The final rule also provides that standards already in effect and submitted to USEPA by May 30, 2000, may be used for CWA purposes, whether or not approved by USEPA.

M. Stringency of Requirements for Individual Pollutants. This Order contains both technology-based and water quality-based effluent limits for individual pollutants. The technology-based effluent limitations consist of restrictions on total suspended solids (TSS) and pH. Derivation of these technology-based limitations is discussed in the Fact Sheet (Attachment F). This Order's technology-based pollutant restrictions implement the minimum applicable federal technology-based requirements. In addition, this Order contains effluent limitations more stringent than the minimum federal technology-based requirements as necessary to meet water quality standards.

Water quality-based effluent limitations (WQBELs) have been derived to implement water quality objectives that protect beneficial uses. Both the beneficial uses and the water quality objectives have been approved pursuant to federal law and are the applicable federal water quality standards. To the extent that toxic pollutant WQBELs were derived from the CTR, the CTR is the applicable standard pursuant

to 40 CFR 131.38. The procedures for calculating the individual WQBELs for priority pollutants are based on the SIP, which USEPA approved on May 18, 2000. All beneficial uses and water quality objectives contained in the Basin Plan were approved under State law and submitted to USEPA prior to May 30, 2000. Any water quality objectives and beneficial uses submitted to USEPA prior to May 30, 2000, but not approved by USEPA before that date, are nonetheless "applicable water quality standards for the purposes of the CWA" pursuant to 40 CFR 131.21(c)(1). Collectively, this Order's restrictions on individual pollutants are no more stringent than required to implement the requirements of the CWA.

N. Antidegradation Policy. 40 CFR 131.12 requires that State water quality standards include an antidegradation policy consistent with the federal policy. The State Water Board established California's antidegradation policy through State Water Board Resolution No. 68-16, which incorporates the federal antidegradation policy where the federal policy applies under federal law and requires that existing water quality be maintained unless degradation is justified based on specific findings. The Basin Plan implements, and incorporates by reference, both the State and federal antidegradation policies. As discussed in the Fact Sheet, the discharge subject to this Order is consistent with the antidegradation provisions of 40 CFR 131.12 and State Water Board Resolution No. 68-16.

O. Anti-Backsliding Requirements. CWA sections 402(o)(2) and 303(d)(4) and 40 CFR 122.44(l) prohibit backsliding in NPDES permits. These anti-backsliding provisions require effluent limitations in a reissued permit to be as stringent as those in the previous permit, with some exceptions where limitations may be relaxed. All effluent limitations in this Order are at least as stringent as those in Order No. R2-2005-0019. As discussed in the Fact Sheet, the permitted discharge is consistent with anti-backsliding requirements.

P. Endangered Species Act. This Order does not authorize any act that results in the taking of a threatened or endangered species or any act that is now prohibited, or becomes prohibited in the future, under either the California Endangered Species Act (Fish and Game Code sections 2050 to 2097) or the federal Endangered Species Act (16 U.S.C.A. sections 1531 to 1544). This Order requires compliance with effluent limits, receiving water limits, and other requirements to protect the beneficial uses of waters of the State. The Discharger is responsible for meeting all requirements of applicable State and federal law pertaining to threatened and endangered species.

Q. Monitoring and Reporting. 40 CFR 122.48 requires that all NPDES permits specify requirements for recording and reporting monitoring results. CWC sections 13267 and 13383 authorize the Regional Water Board to require technical and monitoring reports. The Monitoring and Reporting Program (Attachment E) establishes monitoring and reporting requirements to implement federal and State requirements.

R. Standard and Special Provisions. Standard Provisions, which apply to all NPDES permits in accordance with 40 CFR 122.41, and additional conditions applicable to specified categories of permits in accordance with 40 CFR 122.42, are provided in Attachment D. The Discharger must comply with all standard provisions and with those additional conditions that apply under 40 CFR 122.42. The Regional Water Board has also included in this Order special provisions applicable to the Discharger. Rationale for the special provisions contained in this Order is provided in the Fact Sheet.

S. Provisions and Requirements Implementing State Law. This Order contains no provisions or requirements that only implement State law.

T. Notification of Interested Parties. The Regional Water Board has notified the Discharger and interested agencies and persons of its intent to prescribe Waste Discharge Requirements for the discharge, and has provided them with an opportunity to submit their written comments and recommendations. Details of the notification are provided in the Fact Sheet.

U. Consideration of Public Comment. The Regional Water Board, in a public meeting, heard and considered all comments pertaining to the discharge. Details of the public hearing are provided in the Fact Sheet.

THEREFORE, IT IS HEREBY ORDERED, that this Order supercedes Order No. R2-2005-0019, as amended by Order No. R2-2010-0058, except for enforcement purposes, and, in order to meet the provisions contained in division 7 of the Water Code (commencing with section 13000) and regulations adopted thereunder, and the provisions of the federal Clean Water Act (CWA) and regulations and guidelines adopted thereunder, the Discharger shall comply with the requirements in this Order.

III. DISCHARGE PROHIBITIONS

A. Discharge of treated wastewater at a location or in a manner different from that described in this Order is prohibited.

B. Discharge of wastewater at E-001 at any point at which the wastewater does not receive a minimum initial dilution of at least 10:1 is prohibited.

C. The Discharge shall not contain detectable concentrations of priority pollutants (listed in Attachment G, Table C), except for chromium and zinc, contained in chemicals added for cooling tower maintenance. Compliance with this prohibition shall be determined through annual reports by the Discharger identifying all priority pollutants (listed in Attachment G, Table C), except for chromium and zinc, contained in chemicals the Discharger used for cooling tower maintenance in the previous calendar year. The annual report shall be submitted with the annual Self-Monitoring Report required in Monitoring and Reporting Program VII.B.2 (Attachment E of this Order).

D. There shall be no discharge of polychlorinated biphenyl compounds, such as those historically used for transformer fluid.

IV. EFFLUENT LIMITATIONS AND DISCHARGE SPECIFICATIONS

A. Temperature Effluent Limitation

The temperature of the effluent, as measured at Monitoring Location E-001, shall not exceed a daily average of 86ºF.

B. Technology-Based Effluent Limitations

The Discharger shall maintain compliance with the effluent limitations in Table 6, with compliance measured at Monitoring Location E-001 as described in the attached MRP (Attachment E).

Table 6. Effluent Limitations for Technology-Based Pollutants

Parameter	Units	Maximum Daily	Average Monthly	Instantaneous Minimum	Instantaneous Maximum
Residual chlorine	mg/L	---	---	---	0.0
Total Suspended Solids	mg/L	45	30	---	---
Oil and Grease	mg/L	20	10	---	---
Total Chromium	mg/L	0.2	0.2	---	---
pH [1]	s.u.	---	---	6.0	9.0

Units:
mg/L = milligrams per liter
s.u. = standard units

Footnote for Table 6:

[1] If the Discharger monitors pH continuously, pursuant to 40 CFR 401.17, the Discharger shall be in compliance with the pH limitation specified herein provided that both of the following conditions are satisfied: (i) the total time during which the pH values are outside the required range of pH values shall not exceed 7 hours and 26 minutes in any calendar month; and (ii) no individual excursion from the range of pH values shall exceed 60 minutes.

C. Effluent Limitations for Toxic Pollutants

The Discharger shall maintain compliance with the effluent limitations in Table 7, with compliance measured at Monitoring Location E-001, as described in the attached MRP (Attachment E).

Table 7. Effluent Limitations for Toxic Pollutants

Parameter	Units	Effluent Limitations [1][2]	
		Average Monthly	Maximum Daily
Copper	µg/L	39	54
Lead	µg/L	9.9	20
Zinc	µg/L	430	790

Parameter	Units	Effluent Limitations [1][2]	
		Average Monthly	Maximum Daily
Cyanide	µg/L	21	41

Units:
µg/L = micrograms per liter

Footnotes for Table 7:

[1] a. Limitations for toxic pollutants apply to the average concentration of all samples collected during the averaging period (daily = 24-hour period; monthly = calendar month).

b. All metals limitations are expressed as total recoverable metal.

D. Acute Toxicity:

Representative samples of the effluent, with compliance measured at Monitoring Location EFF-001, shall meet the following limits for acute toxicity. Bioassays shall be conducted in compliance with MRP section V (Attachment E).

a. The survival of organisms in a 96-hour bioassay of undiluted effluent shall be:

- An 11-sample median value of not less than 90 percent survival, and
- An 11-sample 90th percentile value of not less that 70 percent survival.

b. The acute toxicity limitations are further defined as follows:

11 sample median limit: If five or more of the past ten or fewer samples show less than 90 percent survival, then survival of less than 90 percent on the next sample represents a violation of the effluent limitation.

90th percentile limit: If one or more of the past ten or fewer samples show less than 70 percent survival, then survival of less than 70 percent on the next sample represents a violation of the effluent limitation.

c. Bioassays shall be performed using the most up-to-date USEPA protocol and the most sensitive species based on the most recent screening test results. Bioassays shall be conducted in compliance with *Methods for Measuring the Acute Toxicity of Effluents and Receiving Water to Freshwater and Marine Organisms,* currently 5th Edition (EPA-821-R-02-012), with exceptions granted to the Discharger by the Executive Officer and the Environmental Laboratory Accreditation Program (ELAP) upon the Discharger's request with justification.

V. RECEIVING WATER LIMITATIONS

A. Receiving water limitations are based on WQOs contained in the Basin Plan and are a required part of this Order. The discharges shall not cause the following in the Suisun Bay:

1. Floating, suspended, or deposited macroscopic particulate matter or foams;

2. Bottom deposits or aquatic growths to the extent that such deposits or growths cause nuisance or adversely affect beneficial uses;

3. Alteration of temperature, turbidity, or apparent color beyond present natural background levels;

4. Visible, floating, suspended, or deposited oil and other products of petroleum origin; or

5. Toxic or other deleterious substances to be present in concentrations or quantities that will cause deleterious effects on wildlife, waterfowl, or other aquatic biota, or that render any of these unfit for human consumption, either at levels created in the receiving waters or as a result of biological concentration.

B. The discharge of waste shall not cause the following limits to be exceeded in waters of the State within one foot of the water surface:

1. Dissolved Oxygen 7.0 mg/L, minimum

   The median dissolved oxygen concentration for any three consecutive months shall not be less than 80% of the dissolved oxygen content at saturation. When natural factors cause concentrations less than that specified above, the discharge shall not cause further reduction in ambient dissolved oxygen concentrations.

2. Dissolved Sulfide Natural background levels

3. pH Variation from normal ambient pH by more than 0.5 pH units

C. The discharge shall not cause a violation of any particular water quality standard for receiving waters adopted by the Regional or State Water Boards as required by the CWA and regulations adopted thereunder. If more stringent applicable water quality standards are promulgated or approved pursuant to CWA section 303, or amendments thereto, the Regional Water Board will revise and modify this Order in accordance with such more stringent standards.

VI. GROUNDWATER LIMITATIONS

Not applicable.

VII. PROVISIONS

A. Standard Provisions

1. The Discharger shall comply with Federal Standard Provisions included in Attachment D of this Order.

2. The Discharger shall comply with all applicable items of the Regional Standard Provisions, and Monitoring and Reporting Requirements for NPDES Surface Water Discharge Permits included in Attachment G of this Order.

B. Monitoring and Reporting Program (MRP) Requirements

The Discharger shall comply with the MRP (Attachment E) and future revisions thereto, including applicable sampling and reporting requirements in the two Standard Provisions listed in VII.A, above.

C. Special Provisions

1. Reopener Provisions

The Regional Water Board may modify or reopen this Order prior to its expiration date in any of the following circumstances as allowed by law:

a. If present or future investigations demonstrate that the discharges governed by this Order will have, or will cease to have, a reasonable potential to cause or contribute to adverse impacts on water quality and/or beneficial uses of the receiving waters.

b. If new or revised WQOs or Total Maximum Daily Loads (TMDLs) come into effect for the San Francisco Bay estuary and contiguous water bodies (whether statewide, regional, or site-specific). In such cases, effluent limitations in this Order will be modified as necessary to reflect updated WQOs and wasteload allocations in TMDLs. Adoption of effluent limitations contained in this Order is not intended to restrict in any way future modifications based on legally adopted WQOs, TMDLs, or as otherwise permitted under federal regulations governing NPDES permit modifications.

c. If translator or other water quality studies provide a basis for determining that a permit condition should be modified.

d. If an administrative or judicial decision on a separate NPDES permit or WDR addresses requirements similar to this discharge.

e. Or as otherwise authorized by law.

The Discharger may request permit modification based on the above. The Discharger shall include in any such request an antidegradation and anti-backsliding analysis.

2. Best Management Practices and Pollution Minimization

a. Pollution Minimization Program (PMP)

The Discharger shall continue to improve, in a manner acceptable to the Executive Officer, its PMP to reduce pollutant loadings to the cooling tower and therefore to the receiving waters.

b. Annual Pollution Prevention (P2) Report

The Discharger shall submit an annual report, acceptable to the Executive Officer, no later than February 28 each calendar year. The annual report shall cover January through December of the preceding year. Each annual report shall include at least the following information:

(1) *A brief description of the Plant and Plant processes.*

(2) *Discussion of current pollutants of concern.* Periodically, the Discharger shall determine which pollutants are currently a problem and/or which pollutants may be potential future problems. This discussion shall address why the pollutants were identified as pollutants of concern.

(3) *Identification of sources of pollutants of concern.* This discussion shall address how the Discharger identifies pollutant sources. The Discharger should also identify sources or potential sources not directly within its ability or authority to control, such as pollutants in the potable water supply and air deposition.

(4) *Identification and implementation of measures to reduce the sources of the pollutants of concern.* This discussion shall identify and prioritize tasks to address the Discharger's pollutants of concern. The Discharger may implement the tasks themselves or participate in a regional, State, or national group to address its pollutants of concern whenever it is efficient and appropriate to do so. A time line shall be included for the implementation of each task.

(5) *Continuation of outreach tasks for employees.* The Discharger shall develop outreach tasks for its employees. The overall goal of this task is to inform employees about the pollutants of concern, potential sources, and how they might be able to reduce the discharge of

pollutants. The Discharger may provide a forum for employees to provide input to the Program.

(6) *Discussion of criteria used to measure the Program's effectiveness*. The Discharger shall establish criteria to evaluate the effectiveness of its Pollution Prevention Program. This shall include a discussion of the specific criteria used to measure the effectiveness in the tasks in items (4), (5), and (6), above.

(7) *Documentation of efforts and progress*. This discussion shall detail all of the Discharger's activities in the Pollution Prevention Program during the reporting year.

(8) *Evaluation of the Program's effectiveness*. The Discharger shall utilize the criteria established in task (6) above to evaluate the Program's effectiveness.

(9) *Identification of specific tasks and time schedules for future efforts.* Based on the evaluation of effectiveness, the Discharger shall describe how it will continue or change its PMP tasks to more effectively reduce the loading of pollutants to the treatment plant and therefore in its effluent.

c. PMP for Pollutants with Effluent Limitations

The Discharger shall develop and conduct a PMP when there is evidence (e.g., sample results reported as DNQ when the effluent limitation is less than the MDL, sample results from analytical methods more sensitive than those methods required by this Order, presence of whole effluent toxicity, health advisories for fish consumption, results of benthic or aquatic organism tissue sampling) that a priority pollutant is present in the effluent above an effluent limitation and either:

(1) A sample result is reported as DNQ and the effluent limitation is less than the RL; and

(2) A sample result is reported as ND and the effluent limitation is less than the MDL, using definitions described in the SIP.

d. PMP submittals for Pollutants with Effluent Limitations

If triggered by the reasons in section VII.C.2.c, above, the Discharger's PMP shall include, but not be limited to, the following actions and submittals acceptable to the Regional Water Board:

(1) An annual review and semi-annual monitoring of potential sources of the reportable priority pollutant(s), which may include fish tissue monitoring and other bio-uptake sampling, or alternative measures approved by the Executive Officer when it is demonstrated that source monitoring is unlikely to produce useful analytical data;

(2) Quarterly monitoring for the reportable priority pollutant(s) in the influent to the wastewater treatment system, or alternative measures approved by the Executive Officer, when it is demonstrated that influent monitoring is unlikely to produce useful analytical data;

(3) Submittal of a control strategy designed to proceed toward the goal of maintaining concentrations of the reportable priority pollutant(s) in the effluent at or below the effluent limitation;

(4) Implementation of appropriate cost-effective control measures for the reportable priority pollutant(s), consistent with the control strategy; and

(5) The annual report required by section VII.C.2.b. above, shall specifically address the following items:

i. All PMP monitoring results for the previous year,

ii. A list of potential sources of the reportable priority pollutants(s),

iii. A summary of all actions undertaken pursuant to the control strategy, and

iv. A description of actions to be taken in the following year.

3. Copper Action Plan

The Discharger shall implement source control and pollution prevention measures for copper in accordance with the tasks and time schedule in Table 8.

Table 8. Copper Action Plan

Task	Deadline
1. Implement Copper Control Program. The Discharger shall submit a plan for and begin implementation of a program to reduce copper discharges identified as required by Order No. R2-2010-0056.	With annual pollution prevention report due February 28, 2011
2. Implement Additional Measures. If the Regional Water Board notifies the Discharger that the three-year rolling mean dissolved copper concentration of the receiving water exceeds 2.8 µg/L, then the Discharger shall evaluate the effluent copper concentration trend, develop and	Begin implementation of additional measures within 90-days of the notification

Task	Deadline
begin implementation of additional measures to control copper discharges.	
3. Studies to Reduce Copper Pollutant Impact Uncertainties. The Discharger shall submit a study plan and schedule to conduct or cause to be conducted technical studies to investigate possible copper sediment toxicity and technical studies to investigate sublethal effects on salmonids. Specifically, the Discharger shall include the manner in which the above will be accomplished and describe the studies to be performed with an implementation schedule. To satisfy this requirement, the Discharger may collaborate and conduct these studies as a group.	With annual pollution prevention report due February 28, 2011
4. Report on Status of Copper Control Program. The Discharger shall submit a report documenting copper control program implementation and addressing the effectiveness of the actions taken, including any additional copper controls that are required by Task 2 above, together with a schedule for actions to be taken in the next 12 months. Additionally, report the findings and results of studies completed, planned, or in progress under Task 3. Regarding the Task 3 studies, the Discharger may collaborate and provide this information in a single report for an entire group.	With annual pollution prevention report each year starting with report due February 28, 2011

4. Cyanide Action Plan

The Discharger shall implement source control and pollution prevention measures for cyanide in accordance with the tasks and time schedule in Table 9.

Table 9. Cyanide Action Plan

Task	Deadline
1. Submit Cyanide Control Program Action Plan The Discharger shall submit a plan for minimizing cyanide discharges consisting at a minimum, of the following elements: a. Monitor each potential cyanide source identified to assess the need to include that contributing source in the control program. b. Prepare an emergency monitoring and response plan to be implemented if a significant cyanide discharge occurs.	With annual pollution prevention report due February 28, 2011
2. Implement Cyanide Control Program The Discharger shall begin implementation of the plan required in Task 1 to minimize cyanide discharges.	With annual pollution prevention report due February 28, 2011
3. Implement Additional Cyanide Control Measures If the Regional Water Board notifies the Discharger that ambient monitoring shows cyanide concentrations of 1.0 µg/L or higher in the main body of San Francisco Bay, then the Discharger shall commence with actions to identify and abate cyanide sources responsible for the elevated ambient concentrations.	Within 90-days of notification

4. Report Status of Cyanide Control Program Submit an annual report documenting implementation of the cyanide control program and addressing the effectiveness of actions taken, including any additional cyanide controls that are required by Task 3 above, together with a schedule for actions to be taken in the next 12 months.	With annual pollution prevention report due February 28 each year starting with 2011 report

5. Dilution Study

The Discharger shall submit a dilution study in accordance to Table 10 below.

Table 10. Dilution Study

Task	Deadline
1. Submit Study Plan Submit a study plan acceptable to the Executive Officer to determine the dilution at the outfall consistent with the State Implementation Policy. At a minimum, the study plan shall consist of the following elements: a. The dilution study shall be based on a USEPA-approved model, such as Visual PLUMES or CORMIX, to estimate the initial dilution at the outfall at slack tide for both maximum wet weather discharges and average daily discharges. b. The study plan shall include tasks to determine if the discharge is completely mixed as defined in the State Implementation Policy, and/or if not, then also tasks to address each of the 11 points in Section 1.4.2.2.A of the State Implementation Policy. c. The study plan shall include a timeline of tasks and completion dates.	January 1, 2011
2. Implement Study Plan Implement the study plan, including any revisions that the Executive Officer requires.	April 1, 2011
3. Submit Dilution Study Submit a report acceptable to the Executive Officer documenting completion of the dilution study and its results.	August 1, 2011

VIII. COMPLIANCE DETERMINATION

Compliance with effluent limitations for priority pollutants shall be determined using sample reporting protocols defined in Attachment A-Definitions, the MRP (Attachment E), and Fact Sheet Section VI. For purposes of reporting and administrative enforcement by the Regional and State Water Boards, the Discharger shall be deemed out of compliance with effluent limitations if the concentration of the priority pollutant in the monitoring sample is greater than the effluent limitation and greater than or equal to the reporting level (RL).

ATTACHMENT A – DEFINITIONS

Arithmetic Mean (μ), also called the average, is the sum of measured values divided by the number of samples. For ambient water concentrations, the arithmetic mean is calculated as follows:

$$\textbf{Arithmetic mean} = \mu = \Sigma x / n$$

where: Σx is the sum of the measured ambient water concentrations, and n is the number of samples.

Average Monthly Effluent Limitation (AMEL): the highest allowable average of daily discharges over a calendar month, calculated as the sum of all daily discharges measured during a calendar month divided by the number of daily discharges measured during that month.

Average Weekly Effluent Limitation (AWEL): the highest allowable average of daily discharges over a calendar week (Sunday through Saturday), calculated as the sum of all daily discharges measured during a calendar week divided by the number of daily discharges measured during that week.

Bioaccumulative pollutants are those substances taken up by an organism from its surrounding medium through gill membranes, epithelial tissue, or from food and subsequently concentrated and retained in the body of the organism.

Carcinogenic pollutants are substances that are known to cause cancer in living organisms.

Coefficient of Variation (*CV*) is a measure of the data variability and is calculated as the estimated standard deviation divided by the arithmetic mean of the observed values.

Daily Discharge: Daily Discharge is defined as either: (1) the total mass of the constituent discharged over the calendar day (12:00 am through 11:59 pm) or any 24-hour period that reasonably represents a calendar day for purposes of sampling (as specified in this Order), for a constituent with limitations expressed in units of mass or; (2) the unweighted arithmetic mean measurement of the constituent over the day for a constituent with limitations expressed in other units of measurement (e.g., concentration).

The daily discharge may be determined by the analytical results of a composite sample taken over the course of one day (a calendar day or other 24-hour period defined as a day) or by the arithmetic mean of analytical results from one or more grab samples taken over the course of the day.

For composite sampling, if 1 day is defined as a 24-hour period other than a calendar day, the analytical result for the 24-hour period will be considered as the result for the calendar day in which the 24-hour period ends.

Detected, but Not Quantified (DNQ) are those sample results less than the RL, but greater than or equal to the laboratory's MDL.

Dilution Credit is the amount of dilution granted to a discharge in the calculation of a water quality-based effluent limitation, based on the allowance of a specified mixing zone. It is calculated from the dilution ratio or determined through conducting a mixing zone study or modeling of the discharge and receiving water.

Effluent Concentration Allowance (ECA) is a value derived from the water quality criterion/objective, dilution credit, and ambient background concentration that is used, in conjunction with the coefficient of variation for the effluent monitoring data, to calculate a long-term average (LTA) discharge concentration. The ECA has the same meaning as waste load allocation (WLA) as used in USEPA guidance (Technical Support Document For Water Quality-based Toxics Control, March 1991, second printing, EPA/505/2-90-001).

Enclosed Bays means indentations along the coast that enclose an area of oceanic water within distinct headlands or harbor works. Enclosed bays include all bays where the narrowest distance between the headlands or outermost harbor works is less than 75 percent of the greatest dimension of the enclosed portion of San Francisco Bay. Enclosed bays include, but are not limited to, Humboldt Bay, Bodega Harbor, Tomales Bay, Drake's Estero, San Francisco Bay, Morro Bay, Los Angeles-Long Beach Harbor, Upper and Lower Newport Bay, Mission Bay, and San Diego Bay. Enclosed bays do not include inland surface waters or ocean waters.

Estimated Chemical Concentration is the estimated chemical concentration that results from the confirmed detection of the substance by the analytical method below the ML value.

Estuaries means waters, including coastal lagoons, located at the mouths of streams that serve as areas of mixing for fresh and ocean waters. Coastal lagoons and mouths of streams that are temporarily separated from the ocean by sandbars shall be considered estuaries. Estuarine waters shall be considered to extend from a bay or the open ocean to a point upstream where there is no significant mixing of fresh water and seawater. Estuarine waters include, but are not limited to, the Sacramento-San Joaquin Delta, as defined in California Water Code section 12220, Suisun Bay, Carquinez Strait downstream to the Carquinez Bridge, and appropriate areas of the Smith, Mad, Eel, Noyo, Russian, Klamath, San Diego, and Otay rivers. Estuaries do not include inland surface waters or ocean waters.

Inland Surface Waters are all surface waters of the State that do not include the ocean, enclosed bays, or estuaries.

Instantaneous Maximum Effluent Limitation: the highest allowable value for any single grab sample or aliquot (i.e., each grab sample or aliquot is independently compared to the instantaneous maximum limitation).

Instantaneous Minimum Effluent Limitation: the lowest allowable value for any single grab sample or aliquot (i.e., each grab sample or aliquot is independently compared to the instantaneous minimum limitation).

Maximum Daily Effluent Limitation (MDEL) means the highest allowable daily discharge of a pollutant, over a calendar day (or 24-hour period). For pollutants with limitations expressed in units of mass, the daily discharge is calculated as the total mass of the pollutant discharged over the day. For pollutants with limitations expressed in other units of measurement, the daily discharge is calculated as the arithmetic mean measurement of the pollutant over the day.

Median is the middle measurement in a set of data. The median of a set of data is found by first arranging the measurements in order of magnitude (either increasing or decreasing order). If the number of measurements (n) is odd, then the median = $X_{(n+1)/2}$. If n is even, then the median = $(X_{n/2} + X_{(n/2)+1})/2$ (i.e., the midpoint between the $n/2$ and $n/2+1$).

Method Detection Limit (MDL) is the minimum concentration of a substance that can be measured and reported with 99 percent confidence that the analyte concentration is greater than zero, as defined in title 40 of the Code of Federal Regulations, Part 136, Attachment B, revised as of July 3, 1999.

Minimum Level (ML) is the concentration at which the entire analytical system must give a recognizable signal and acceptable calibration point. The ML is the concentration in a sample that is equivalent to the concentration of the lowest calibration standard analyzed by a specific analytical procedure, assuming that all the method specified sample weights, volumes, and processing steps have been followed.

Mixing Zone is a limited volume of receiving water that is allocated for mixing with a wastewater discharge where water quality criteria can be exceeded without causing adverse effects to the overall water body.

Not Detected (ND) are those sample results less than the laboratory's MDL.

Ocean Waters are the territorial marine waters of the State as defined by California law to the extent these waters are outside of enclosed bays, estuaries, and coastal lagoons. Discharges to ocean waters are regulated in accordance with the State Water Board's California Ocean Plan.

Persistent pollutants are substances for which degradation or decomposition in the environment is nonexistent or very slow.

Pollutant Minimization Program (PMP) means waste minimization and pollution prevention actions that include, but are not limited to, product substitution, waste stream recycling, alternative waste management methods, and education of the public and businesses. The goal of the PMP shall be to reduce all potential sources of a priority pollutant(s) through pollutant minimization (control) strategies, including pollution prevention measures as appropriate, to maintain the effluent concentration at or below the water quality-based effluent limitation. Pollution prevention measures may be particularly appropriate for persistent bioaccumulative priority pollutants where there is evidence that beneficial uses are being impacted. The Regional Water Board may consider cost effectiveness when establishing the requirements of a PMP. The completion and implementation of a Pollution Prevention Plan, if required pursuant to California Water Code section 13263.3(d), shall be considered to fulfill the PMP requirements.

Pollution Prevention means any action that causes a net reduction in the use or generation of a hazardous substance or other pollutant that is discharged into water and includes, but is not limited to, input change, operational improvement, production process change, and product reformulation (as defined in California Water Code section 13263.3). Pollution prevention does not include actions that merely shift a pollutant in wastewater from one environmental medium to another environmental medium, unless clear environmental benefits of such an approach are identified to the satisfaction of the State or Regional Water Board.

Reporting Level (RL) is the ML (and its associated analytical method) chosen by the Discharger for reporting and compliance determination from the MLs included in this Order. The MLs included in this Order correspond to approved analytical methods for reporting a sample result that are selected by the Regional Water Board either from Appendix 4 of the SIP in accordance with section 2.4.2 of the SIP or established in accordance with section 2.4.3 of the SIP. The ML is based on the proper application of method-based analytical procedures for sample preparation and the absence of any matrix interferences. Other factors may be applied to the ML depending on the specific sample preparation steps employed. For example, the treatment typically applied in cases where there are matrix-effects is to dilute the sample or sample aliquot by a factor of ten. In such cases, this additional factor must be applied to the ML in the computation of the RL.

Satellite Collection System is the portion, if any, of a sanitary sewer system owned or operated by a different public agency than the agency that owns and operates the wastewater treatment facility that a sanitary sewer system is tributary to.

Source of Drinking Water is any water designated as municipal or domestic supply (MUN) in a Regional Water Board Basin Plan.

Standard Deviation (σ) is a measure of variability that is calculated as follows:

$$\sigma = (\sum[(x - \mu)^2]/(n - 1))^{0.5}$$

where:

x is the observed value;

μ is the arithmetic mean of the observed values; and

n is the number of samples.

Toxicity Reduction Evaluation (TRE) is a study conducted in a step-wise process designed to identify the causative agents of effluent or ambient toxicity, isolate the sources of toxicity, evaluate the effectiveness of toxicity control options, and then confirm the reduction in toxicity. The first steps of the TRE consist of the collection of data relevant to the toxicity, including additional toxicity testing, and an evaluation of facility operations and maintenance practices, and best management practices. A Toxicity Identification Evaluation (TIE) may be required as part of the TRE, if appropriate. (A TIE is a set of procedures to identify the specific chemical(s) responsible for toxicity. These procedures are performed in three phases (characterization, identification, and confirmation) using aquatic organism toxicity tests.)

ATTACHMENT B – SITE MAP

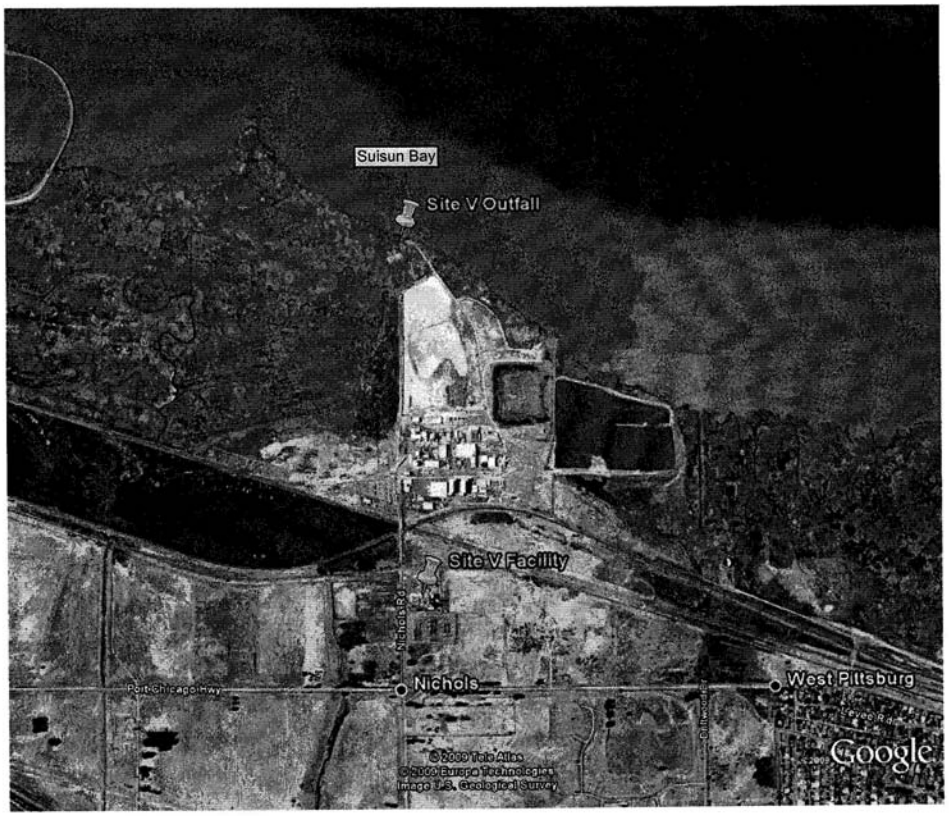

ATTACHMENT C – FLOW SCHEMATIC

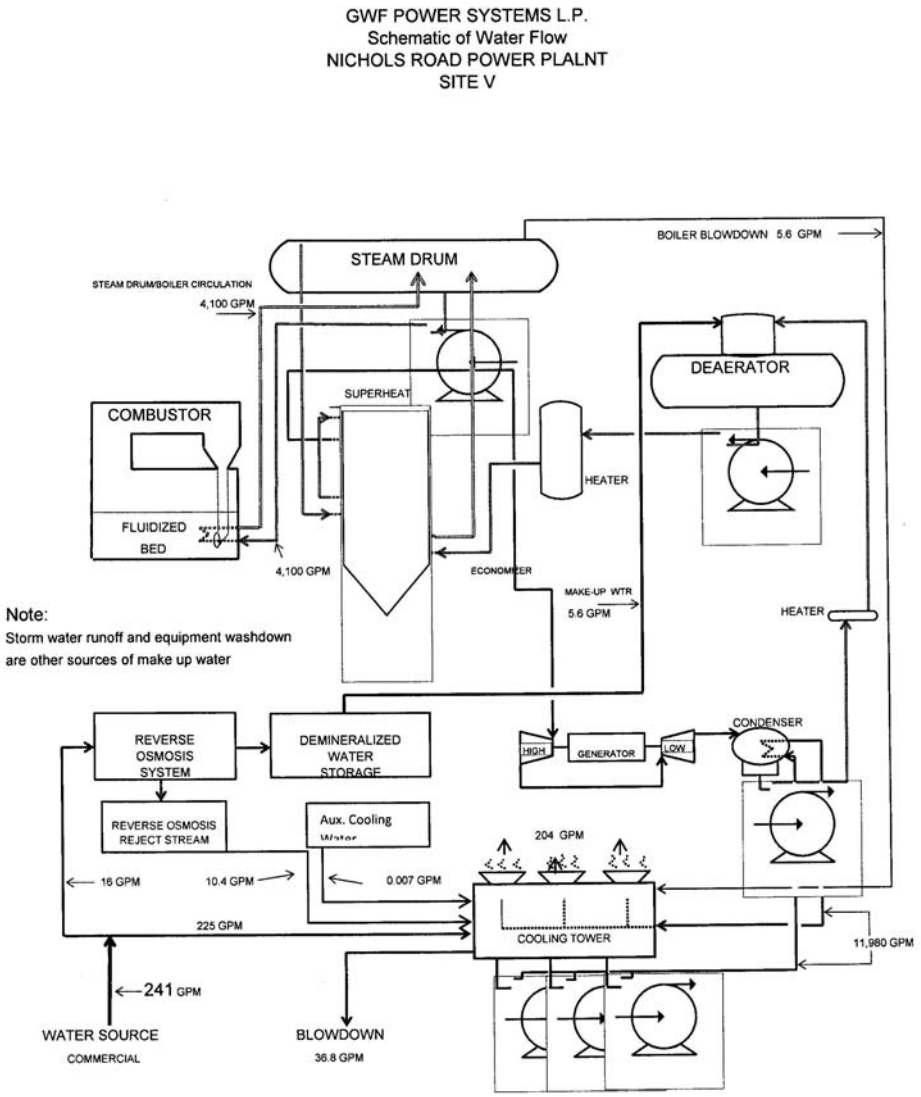

ATTACHMENT D – FEDERAL STANDARD PROVISIONS

I. STANDARD PROVISIONS – PERMIT COMPLIANCE

A. Duty to Comply

1. The Discharger must comply with all of the conditions of this Order. Any noncompliance constitutes a violation of the Clean Water Act (CWA) and the California Water Code and is grounds for enforcement action, for permit termination, revocation and reissuance, or modification; or denial of a permit renewal application. (40 C.F.R. § 122.41(a).)

2. The Discharger shall comply with effluent standards or prohibitions established under Section 307(a) of the CWA for toxic pollutants and with standards for sewage sludge use or disposal established under Section 405(d) of the CWA within the time provided in the regulations that establish these standards or prohibitions, even if this Order has not yet been modified to incorporate the requirement. (40 C.F.R. § 122.41(a)(1).)

B. Need to Halt or Reduce Activity Not a Defense

It shall not be a defense for a Discharger in an enforcement action that it would have been necessary to halt or reduce the permitted activity in order to maintain compliance with the conditions of this Order. (40 C.F.R. § 122.41(c).)

C. Duty to Mitigate

The Discharger shall take all reasonable steps to minimize or prevent any discharge or sludge use or disposal in violation of this Order that has a reasonable likelihood of adversely affecting human health or the environment. (40 C.F.R. § 122.41(d).)

D. Proper Operation and Maintenance

The Discharger shall at all times properly operate and maintain all facilities and systems of treatment and control (and related appurtenances) which are installed or used by the Discharger to achieve compliance with the conditions of this Order. Proper operation and maintenance also includes adequate laboratory controls and appropriate quality assurance procedures. This provision requires the operation of backup or auxiliary facilities or similar systems that are installed by a Discharger only when necessary to achieve compliance with the conditions of this Order (40 C.F.R. § 122.41(e)).

E. Property Rights

1. This Order does not convey any property rights of any sort or any exclusive privileges. (40 C.F.R. § 122.41(g).)

2. The issuance of this Order does not authorize any injury to persons or property or invasion of other private rights, or any infringement of state or local law or regulations. (40 C.F.R. § 122.5(c).)

F. Inspection and Entry

The Discharger shall allow the Regional Water Board, State Water Board, United States Environmental Protection Agency (USEPA), and/or their authorized representatives (including an authorized contractor acting as their representative), upon the presentation of credentials and other documents, as may be required by law, to (40 C.F.R. § 122.41(i); Wat. Code, § 13383):

1. Enter upon the Discharger's premises where a regulated facility or activity is located or conducted, or where records are kept under the conditions of this Order (40 C.F.R. § 122.41(i)(1));

2. Have access to and copy, at reasonable times, any records that must be kept under the conditions of this Order (40 C.F.R. § 122.41(i)(2));

3. Inspect and photograph, at reasonable times, any facilities, equipment (including monitoring and control equipment), practices, or operations regulated or required under this Order (40 C.F.R. § 122.41(i)(3)); and

4. Sample or monitor, at reasonable times, for the purposes of assuring Order compliance or as otherwise authorized by the CWA or the Water Code, any substances or parameters at any location. (40 C.F.R. § 122.41(i)(4).)

G. Bypass

1. Definitions

   a. "Bypass" means the intentional diversion of waste streams from any portion of a treatment facility. (40 C.F.R. § 122.41(m)(1)(i).)

   b. "Severe property damage" means substantial physical damage to property, damage to the treatment facilities, which causes them to become inoperable, or substantial and permanent loss of natural resources that can reasonably be expected to occur in the absence of a bypass. Severe property damage does not mean economic loss caused by delays in production. (40 C.F.R. § 122.41(m)(1)(ii).)

2. Bypass not exceeding limitations. The Discharger may allow any bypass to occur which does not cause exceedances of effluent limitations, but only if it is for essential maintenance to assure efficient operation. These bypasses are not subject to the provisions listed in Standard Provisions – Permit Compliance I.G.3, I.G.4, and I.G.5 below. (40 C.F.R. § 122.41(m)(2).)

3. Prohibition of bypass. Bypass is prohibited, and the Regional Water Board may take enforcement action against a Discharger for bypass, unless (40 C.F.R. § 122.41(m)(4)(i)):

    a. Bypass was unavoidable to prevent loss of life, personal injury, or severe property damage (40 C.F.R. § 122.41(m)(4)(i)(A));

    b. There were no feasible alternatives to the bypass, such as the use of auxiliary treatment facilities, retention of untreated wastes, or maintenance during normal periods of equipment downtime. This condition is not satisfied if adequate back-up equipment should have been installed in the exercise of reasonable engineering judgment to prevent a bypass that occurred during normal periods of equipment downtime or preventive maintenance (40 C.F.R. § 122.41(m)(4)(i)(B)); and

    c. The Discharger submitted notice to the Regional Water Board as required under Standard Provisions – Permit Compliance I.G.5 below. (40 C.F.R. § 122.41(m)(4)(i)(C).)

4. The Regional Water Board may approve an anticipated bypass, after considering its adverse effects, if the Regional Water Board determines that it will meet the three conditions listed in Standard Provisions – Permit Compliance I.G.3 above. (40 C.F.R. § 122.41(m)(4)(ii).)

5. Notice

    a. Anticipated bypass. If the Discharger knows in advance of the need for a bypass, it shall submit a notice, if possible at least 10 days before the date of the bypass. (40 C.F.R. § 122.41(m)(3)(i).)

    b. Unanticipated bypass. The Discharger shall submit notice of an unanticipated bypass as required in Standard Provisions - Reporting V.E below (24-hour notice). (40 C.F.R. § 122.41(m)(3)(ii).)

H. Upset

Upset means an exceptional incident in which there is unintentional and temporary noncompliance with technology-based permit effluent limitations because of factors beyond the reasonable control of the Discharger. An upset does not include noncompliance to the extent caused by operational error, improperly designed

treatment facilities, inadequate treatment facilities, lack of preventive maintenance, or careless or improper operation. (40 C.F.R. § 122.41(n)(1).)

1. Effect of an upset. An upset constitutes an affirmative defense to an action brought for noncompliance with such technology-based permit effluent limitations if the requirements of Standard Provisions – Permit Compliance I.H.2 below are met. No determination made during administrative review of claims that noncompliance was caused by upset, and before an action for noncompliance, is final administrative action subject to judicial review. (40 C.F.R. § 122.41(n)(2).).

2. Conditions necessary for a demonstration of upset. A Discharger who wishes to establish the affirmative defense of upset shall demonstrate, through properly signed, contemporaneous operating logs or other relevant evidence that (40 C.F.R. § 122.41(n)(3)):

   a. An upset occurred and that the Discharger can identify the cause(s) of the upset (40 C.F.R. § 122.41(n)(3)(i));

   b. The permitted facility was, at the time, being properly operated (40 C.F.R. § 122.41(n)(3)(ii));

   c. The Discharger submitted notice of the upset as required in Standard Provisions – Reporting V.E.2.b below (24-hour notice) (40 C.F.R. § 122.41(n)(3)(iii)); and

   d. The Discharger complied with any remedial measures required under Standard Provisions – Permit Compliance I.C above. (40 C.F.R. § 122.41(n)(3)(iv).)

3. Burden of proof. In any enforcement proceeding, the Discharger seeking to establish the occurrence of an upset has the burden of proof. (40 C.F.R. § 122.41(n)(4).)

II. STANDARD PROVISIONS – PERMIT ACTION

A. General

This Order may be modified, revoked and reissued, or terminated for cause. The filing of a request by the Discharger for modification, revocation and reissuance, or termination, or a notification of planned changes or anticipated noncompliance does not stay any Order condition. (40 C.F.R. § 122.41(f).)

B. Duty to Reapply

If the Discharger wishes to continue an activity regulated by this Order after the expiration date of this Order, the Discharger must apply for and obtain a new permit. (40 C.F.R. § 122.41(b).)

C. Transfers

This Order is not transferable to any person except after notice to the Regional Water Board. The Regional Water Board may require modification or revocation and reissuance of this Order to change the name of the Discharger and incorporate such other requirements as may be necessary under the CWA and the Water Code. (40 C.F.R. § 122.41(l)(3); § 122.61.)

III. STANDARD PROVISIONS – MONITORING

A. Samples and measurements taken for the purpose of monitoring shall be representative of the monitored activity. (40 C.F.R. § 122.41(j)(1).)

B. Monitoring results must be conducted according to test procedures under Part 136 or, in the case of sludge use or disposal, approved under Part 136 unless otherwise specified in Part 503 unless other test procedures have been specified in this Order. (40 C.F.R. § 122.41(j)(4); § 122.44(i)(1)(iv).)

IV. STANDARD PROVISIONS – RECORDS

A. Except for records of monitoring information required by this Order related to the Discharger's sewage sludge use and disposal activities, which shall be retained for a period of at least five years (or longer as required by Part 503), the Discharger shall retain records of all monitoring information, including all calibration and maintenance records and all original strip chart recordings for continuous monitoring instrumentation, copies of all reports required by this Order, and records of all data used to complete the application for this Order, for a period of at least three (3) years from the date of the sample, measurement, report or application. This period may be extended by request of the Regional Water Board Executive Officer at any time. (40 C.F.R. § 122.41(j)(2).)

B. Records of monitoring information shall include:

1. The date, exact place, and time of sampling or measurements (40 C.F.R. § 122.41(j)(3)(i));

2. The individual(s) who performed the sampling or measurements (40 C.F.R. § 122.41(j)(3)(ii));

3. The date(s) analyses were performed (40 C.F.R. § 122.41(j)(3)(iii));

4. The individual(s) who performed the analyses (40 C.F.R. § 122.41(j)(3)(iv));

5. The analytical techniques or methods used (40 C.F.R. § 122.41(j)(3)(v)); and

6. The results of such analyses. (40 C.F.R. § 122.41(j)(3)(vi).)

C. Claims of confidentiality for the following information will be denied (40 C.F.R. § 122.7(b)):

1. The name and address of any permit applicant or Discharger (40 C.F.R. § 122.7(b)(1)); and

2. Permit applications and attachments, permits and effluent data. (40 C.F.R. § 122.7(b)(2).)

V. STANDARD PROVISIONS – REPORTING

A. Duty to Provide Information

The Discharger shall furnish to the Regional Water Board, State Water Board, or USEPA within a reasonable time, any information which the Regional Water Board, State Water Board, or USEPA may request to determine whether cause exists for modifying, revoking and reissuing, or terminating this Order or to determine compliance with this Order. Upon request, the Discharger shall also furnish to the Regional Water Board, State Water Board, or USEPA copies of records required to be kept by this Order. (40 C.F.R. § 122.41(h); Wat. Code, § 13267.)

B. Signatory and Certification Requirements

1. All applications, reports, or information submitted to the Regional Water Board, State Water Board, and/or USEPA shall be signed and certified in accordance with Standard Provisions – Reporting V.B.2, V.B.3, V.B.4, and V.B.5 below. (40 C.F.R. § 122.41(k).)

2. All permit applications shall be signed by either a principal executive officer or ranking elected official. For purposes of this provision, a principal executive officer of a federal agency includes: (i) the chief executive officer of the agency, or (ii) a senior executive officer having responsibility for the overall operations of a principal geographic unit of the agency (e.g., Regional Administrators of USEPA). (40 C.F.R. § 122.22(a)(3).).

3. All reports required by this Order and other information requested by the Regional Water Board, State Water Board, or USEPA shall be signed by a person described in Standard Provisions – Reporting V.B.2 above, or by a duly authorized representative of that person. A person is a duly authorized representative only if:

a. The authorization is made in writing by a person described in Standard Provisions – Reporting V.B.2 above (40 C.F.R. § 122.22(b)(1));

b. The authorization specifies either an individual or a position having responsibility for the overall operation of the regulated facility or activity such as the position of plant manager, operator of a well or a well field, superintendent, position of equivalent responsibility, or an individual or position having overall responsibility for environmental matters for the company. (A duly authorized representative may thus be either a named individual or any individual occupying a named position.) (40 C.F.R. § 122.22(b)(2)); and

c. The written authorization is submitted to the Regional Water Board and State Water Board. (40 C.F.R. § 122.22(b)(3).)

4. If an authorization under Standard Provisions – Reporting V.B.3 above is no longer accurate because a different individual or position has responsibility for the overall operation of the facility, a new authorization satisfying the requirements of Standard Provisions – Reporting V.B.3 above must be submitted to the Regional Water Board and State Water Board prior to or together with any reports, information, or applications, to be signed by an authorized representative. (40 C.F.R. § 122.22(c).)

5. Any person signing a document under Standard Provisions – Reporting V.B.2 or V.B.3 above shall make the following certification:

   "I certify under penalty of law that this document and all attachments were prepared under my direction or supervision in accordance with a system designed to assure that qualified personnel properly gather and evaluate the information submitted. Based on my inquiry of the person or persons who manage the system or those persons directly responsible for gathering the information, the information submitted is, to the best of my knowledge and belief, true, accurate, and complete. I am aware that there are significant penalties for submitting false information, including the possibility of fine and imprisonment for knowing violations." (40 C.F.R. § 122.22(d).)

C. Monitoring Reports

1. Monitoring results shall be reported at the intervals specified in the Monitoring and Reporting Program (Attachment E) in this Order. (40 C.F.R. § 122.22(l)(4).)

2. Monitoring results must be reported on a Discharge Monitoring Report (DMR) form or forms provided or specified by the Regional Water Board or State Water Board for reporting results of monitoring of sludge use or disposal practices. (40 C.F.R. § 122.41(l)(4)(i).)

3. If the Discharger monitors any pollutant more frequently than required by this Order using test procedures approved under Part 136 or, in the case of sludge use or disposal, approved under Part 136 unless otherwise specified in Part 503, or as specified in this Order, the results of this monitoring shall be included in the calculation and reporting of the data submitted in the DMR or sludge reporting form specified by the Regional Water Board. (40 C.F.R. § 122.41(l)(4)(ii).)

4. Calculations for all limitations, which require averaging of measurements, shall utilize an arithmetic mean unless otherwise specified in this Order. (40 C.F.R. § 122.41(l)(4)(iii).)

D. Compliance Schedules

Reports of compliance or noncompliance with, or any progress reports on, interim and final requirements contained in any compliance schedule of this Order, shall be submitted no later than 14 days following each schedule date. (40 C.F.R. § 122.41(l)(5).)

E. Twenty-Four Hour Reporting

1. The Discharger shall report any noncompliance that may endanger health or the environment. Any information shall be provided orally within 24 hours from the time the Discharger becomes aware of the circumstances. A written submission shall also be provided within five (5) days of the time the Discharger becomes aware of the circumstances. The written submission shall contain a description of the noncompliance and its cause; the period of noncompliance, including exact dates and times, and if the noncompliance has not been corrected, the anticipated time it is expected to continue; and steps taken or planned to reduce, eliminate, and prevent reoccurrence of the noncompliance. (40 C.F.R. § 122.41(l)(6)(i).)

2. The following shall be included as information that must be reported within 24 hours under this paragraph (40 C.F.R. § 122.41(l)(6)(ii)):

   a. Any unanticipated bypass that exceeds any effluent limitation in this Order. (40 C.F.R. § 122.41(l)(6)(ii)(A).)

   b. Any upset that exceeds any effluent limitation in this Order. (40 C.F.R. § 122.41(l)(6)(ii)(B).)

3. The Regional Water Board may waive the above-required written report under this provision on a case-by-case basis if an oral report has been received within 24 hours. (40 C.F.R. § 122.41(l)(6)(iii).)

F. Planned Changes

The Discharger shall give notice to the Regional Water Board as soon as possible of any planned physical alterations or additions to the permitted facility. Notice is required under this provision only when (40 C.F.R. § 122.41(l)(1)):

1. The alteration or addition to a permitted facility may meet one of the criteria for determining whether a facility is a new source in section 122.29(b) (40 C.F.R. § 122.41(l)(1)(i)); or

2. The alteration or addition could significantly change the nature or increase the quantity of pollutants discharged. This notification applies to pollutants that are not subject to effluent limitations in this Order. (40 C.F.R. § 122.41(l)(1)(ii).)

3. The alteration or addition results in a significant change in the Discharger's sludge use or disposal practices, and such alteration, addition, or change may justify the application of permit conditions that are different from or absent in the existing permit, including notification of additional use or disposal sites not reported during the permit application process or not reported pursuant to an approved land application plan. (40 C.F.R.§ 122.41(l)(1)(iii).)

G. Anticipated Noncompliance

The Discharger shall give advance notice to the Regional Water Board or State Water Board of any planned changes in the permitted facility or activity that may result in noncompliance with General Order requirements. (40 C.F.R. § 122.41(l)(2).)

H. Other Noncompliance

The Discharger shall report all instances of noncompliance not reported under Standard Provisions – Reporting V.C, V.D, and V.E above at the time monitoring reports are submitted. The reports shall contain the information listed in Standard Provision – Reporting V.E above. (40 C.F.R. § 122.41(l)(7).)

I. Other Information

When the Discharger becomes aware that it failed to submit any relevant facts in a permit application, or submitted incorrect information in a permit application or in any report to the Regional Water Board, State Water Board, or USEPA, the Discharger shall promptly submit such facts or information. (40 C.F.R. § 122.41(l)(8).)

VI. STANDARD PROVISIONS – ENFORCEMENT

The Regional Water Board is authorized to enforce the terms of this Order under several provisions of the Water Code, including, but not limited to, sections 13385, 13386, and 13387.

VII. ADDITIONAL PROVISIONS – NOTIFICATION LEVELS

A. Publicly-Owned Treatment Works (POTWs)

All POTWs shall provide adequate notice to the Regional Water Board of the following (40 C.F.R. § 122.42(b)):

1. Any new introduction of pollutants into the POTW from an indirect discharger that would be subject to sections 301 or 306 of the CWA if it were directly discharging those pollutants (40 C.F.R. § 122.42(b)(1)); and

2. Any substantial change in the volume or character of pollutants being introduced into that POTW by a source introducing pollutants into the POTW at the time of adoption of this Order. (40 C.F.R. § 122.42(b)(2).)

3. Adequate notice shall include information on the quality and quantity of effluent introduced into the POTW as well as any anticipated impact of the change on the quantity or quality of effluent to be discharged from the POTW. (40 C.F.R. § 122.42(b)(3).)

ATTACHMENT E – MONITORING AND REPORTING PROGRAM

I. General Monitoring Provisions E-2
II. Monitoring Locations E-2
III. Effluent Monitoring Requirements E-3
IV. Whole Effluent Toxicity Testing Requirements E-4
V. Land Discharge Monitoring Requirements E-8
VI. Receiving water Monitoring Requirements E-8
VII. Reporting Requirements E-8

List of Tables

Table E-1. Monitoring Station Locations E-2
Table E-2. Effluent Monitoring – Monitoring Location E-001 ..... E-3
Table E-3. Receiving Water Monitoring – Monitoring Location RSW-001 ..... E-8
Table E-4. Monitoring Periods and Reporting Schedule E-9

MONITORING AND REPORTING PROGRAM

National Pollutant Discharge Elimination System (NPDES) regulations at 40 CFR 122.48 require that all NPDES permits specify monitoring and reporting requirements. California Water Code (CWC) sections 13267 and 13383 also authorize the Regional Water Quality Control Board (Regional Water Board) to require technical and monitoring reports. This MRP establishes monitoring and reporting requirements that implement federal and State regulations.

I. GENERAL MONITORING PROVISIONS

A. The Discharger shall comply with this MRP for the Order as adopted by the Regional Water Board. The MRP may be amended by the Executive Officer pursuant to United States Environmental Protection Agency (USEPA) regulations 40 CFR 122.62, 122.63, and 124.5. If any discrepancies exist between the MRP and the Regional Standard Provisions, the MRP prevails.

B. All monitoring shall be conducted in accordance with Section III of Attachment D and as supplemented in Attachment G of this Order. Equivalent test methods must be more sensitive than those specified in 40 CFR 136, must be specified in the permit, and must be approved for use by the Executive Officer, following consultation with the State Water Quality Control Board (State Water Board) Quality Assurance Program.

II. MONITORING LOCATIONS

The Discharger shall establish the following monitoring locations to demonstrate compliance with the effluent limitations, discharge specifications, and other requirements in the Order.

Table E-1. Monitoring Station Locations

Type of Sampling Location	Monitoring Location Name	Monitoring Location Description
Effluent	E-001	Discharge from the cooling tower at any point after the cooling tower and before discharge to Suisun Bay.
Receiving Water	C-1	300 feet upstream from the point of discharge, equidistant from the shoreline with that of the diffuser.
Receiving Water	C-2	300 feet downstream from the point of discharge, equidistant from the shoreline with that of the diffuser.
Receiving Water	C-3	In Suisun Bay, located above the diffuser and two feet below the water surface.

III. EFFLUENT MONITORING REQUIREMENTS

The Discharger shall monitor flow rates and effluent at E-001 according to Table E-2 below.

Table E-2. Effluent Monitoring

Parameter	Units	Sample Type	Minimum Sampling Frequency
Discharge Flow Rate [1]	MGD	Continuous	Continuous
Flow rate of low volume waste sources[2]	MGD	Estimate	1/month
pH	standard units	Grab	1/day
Temperature	°F	Grab	1/day
Total Suspended Solids	mg/L	24-hour composite	1/month
Oil and Grease [3]	mg/L	24-hour composite	1/month
Chlorine residual [4]	mg/L	Grab	1/month[4]
Acute Toxicity [5]	% survival	24-hour composite	1/quarter
Chronic Toxicity [6]	TUc	24-hour composite	1/permit term
Total Chromium	µg/L	24-hour composite	1/month
Copper	µg/L	24-hour composite	1/month
Lead	µg/L	24-hour composite	1/month
Zinc	µg/L	24-hour composite	1/month
Cyanide [7]	µg/L	Grab	1/month
Remaining Priority Pollutants	µg/L	24-hour composite	1/permit term

Units:

MGD	=	million gallons per day
ºF	=	degrees Fahrenheit
g/day	=	grams per day
kg/day	=	kilograms per day
µg/L	=	micrograms per liter
mg/L	=	milligrams per liter
TUc	=	chronic toxicity units

Footnotes:

[1] For each calendar month, the Discharger shall report the average daily flow rate for each day of discharge and the average monthly flow rate for that month.

[2] Low volume waste sources include boiler/steam condensate, reverse osmosis/demineralization wastewater, equipment wastewater, and auxiliary cooling water.

[3] Each Oil & Grease sample event shall consist of a composite sample comprised of three grab samples taken at equal intervals during the sampling date, with each grab sample being collected in a glass container. The grab samples shall be mixed in proportion to the instantaneous flow rates occurring at the time of each grab sample, within an accuracy of plus or minus 5%. Each glass container used for sample collection or mixing shall be thoroughly rinsed with solvent rinsings as soon as possible after use, and the solvent rinsings shall be added to the composite sample for extraction and analysis.

[4] Test required only when the Discharger adds chlorine to its process. Testing is required on the same day the Discharger adds chlorine if chlorine is used irregularly. If the Discharger adds chlorine on a regularly, the monitoring frequency is once each month.

[5] Acute bioassay tests shall be performed in accordance with MRP section IV.A.

[6] Chronic bioassay tests shall be performed in accordance with MRP section IV.B.

[7] The Discharger may, at its option, analyze for cyanide as Weak Acid Dissociable Cyanide using protocols specified in Standard Method Part 4500-CN-I, USEPA Method OI 1677, or an equivalent method in the latest edition. The Executive Officer must approve any alternative method of analysis.

IV. WHOLE EFFLUENT TOXICITY TESTING REQUIREMENTS

A. Whole Effluent Acute Toxicity

1. Compliance with the acute toxicity effluent limitations of the Order shall be evaluated by measuring survival of test organisms exposed to 96-hour static renewal bioassays.

2. Test organisms shall be fathead minnow unless the Executive Officer specified otherwise in writing.

3. All bioassays shall be performed according to the most up-to-date protocols in 40 CFR 136, currently in *Methods for Measuring the Acute Toxicity of Effluents and Receiving Water to Freshwater and Marine Organisms,* 5th Edition.

4. If the Discharger can demonstrate that specific identifiable substances in the discharge are being rapidly rendered harmless upon discharge to the receiving water, compliance with the acute toxicity limit may be determined after the test samples are adjusted to remove the influence of those substances. The Executive Officer shall approve any such adjustments.

5. Effluent used for fish bioassays shall be dechlorinated prior to testing. Monitoring of the bioassay water shall include, on a daily basis, the following parameters: pH, dissolved oxygen, ammonia (if toxicity is observed), temperature, hardness, and alkalinity. These results shall be reported. If a violation of acute toxicity requirements occurs, the bioassay test shall be repeated with new fish as soon as practical and shall be repeated until a test fish survival rate of 90 percent or greater is observed. If the control fish survival rate is less than 90 percent, the bioassay test shall be restarted with new fish and shall continue as soon as practical until an acceptable test is completed (i.e., control fish survival rate is 90 percent or greater).

B. Whole Effluent Chronic Toxicity

1. Monitoring Requirements

a. *Sampling*. The Discharger shall collect 24-hour composite samples of the effluent at EFF-001 for critical life stage toxicity testing as indicated below. For toxicity tests requiring renewals, 24-hour composite samples collected on consecutive days are required.

b. *Test Species*. Chronic toxicity shall be monitored using critical life stage tests(s) and the most sensitive test species identified by screening phase testing. At the time of this permit adoption, the approved species is *Mytilus* sp. The Executive Officer may change to another test species if data suggest that another test species is more sensitive to the discharge.

c. *Methodology*. Sample collection, handling and preservation shall be in accordance with USEPA protocols. In addition, bioassays shall be conducted in compliance with the most recently promulgated test methods, as shown in Appendix E-1. These are *Short-Term Methods for Estimating the Chronic Toxicity of Effluents and Receiving Waters to Marine and Estuarine Organisms*, currently third edition (EPA-821-R-02-014), and *Short-term Methods for Estimating the Chronic Toxicity of Effluents and Receiving Waters to Freshwater Organisms*, currently fourth Edition (EPA-821-R-02-013), with exceptions granted the Discharger by the Executive Officer and the Environmental Laboratory Accreditation Program (ELAP).

d. *Dilution Series.* The Discharger shall conduct tests at 50%, 25%, 10%, 5%, and 2.5%. The "%" represents percent effluent as discharged.

e. *Accelerated Monitoring*. The Discharger shall accelerate monitoring to occur monthly when either of the following conditions is exceeded:

(1) Three sample median value of 10 chronic toxicity units (TUc), or

(2) Single sample maximum value of 20 TUc.

2. Reporting Requirements

a. *Routine Reporting*. Toxicity test results for the current reporting period shall include, at a minimum, for each test:

(1) Sample dates

(2) Test initiation date

(3) Test species

(4) End point values for each dilution (e.g., number of young, growth rate, percent survival)

(5) NOEC values in percent effluent

(6) IC_{15}, IC_{25}, IC_{40}, and IC_{50} values (or EC_{15}, EC_{25} ... etc.) as percent effluent

(7) TUc values (100/NOEC, $100/IC_{25}$, or $100/EC_{25}$)

(8) Mean percent mortality (±s.d.) after 96 hours in 100% effluent (if applicable)

(9) NOEC and LOEC values for reference toxicant tests

(10) IC50 or EC50 values for reference toxicant tests

(11) Available water quality measurements for each test (pH, dissolved oxygen, temperature, conductivity, hardness, salinity, ammonia)

b. *Compliance Summary*. The results of the chronic toxicity testing shall be provided in the self-monitoring report and shall include a summary table of chronic toxicity data from at least three of the most recent samples. The information in the table shall include items listed above under 2.a, specifically item numbers (1), (3), (5), (6)[IC_{25} or EC_{25}], (7), and (8).

3. Toxicity Reduction Evaluation (TRE)

a. To be ready to respond to toxicity events, the Discharger shall prepare a generic TRE work plan within 90 days of the effective date of this Order. The Discharger shall review and update the work plan as necessary to remain current and applicable to the discharge and discharge facilities.

b. Within 30 days of exceeding either trigger for accelerated monitoring, the Discharger shall submit to the Regional Water Board a specific TRE work plan, which should be the generic work plan revised as appropriate for this toxicity event after consideration of available discharge data.

c. Within 30 days of the date of completion of the accelerated monitoring tests observed to exceed either trigger, the Discharger shall initiate a TRE in accordance with a TRE work plan that incorporates any and all comments from the Executive Officer.

d. The TRE shall be specific to the discharge and be prepared in accordance with current technical guidance and reference materials, including USEPA guidance materials. The TRE shall be conducted as a tiered evaluation process, as summarized below:

(1) Tier 1 consists of basic data collection (routine and accelerated monitoring).

(2) Tier 2 consists of evaluation of optimization of the treatment process, including operation practices and in-plant process chemicals.

(3) Tier 3 consists of a toxicity identification evaluation (TIE).

(4) Tier 4 consists of evaluation of options for additional effluent treatment processes.

(5) Tier 5 consists of evaluation of options for modifications of in-plant treatment processes.

(6) Tier 6 consists of implementation of selected toxicity control measures, and follow-up monitoring and confirmation of implementation success.

e. The TRE may be ended at any stage if monitoring finds there is no longer consistent toxicity (complying with requirements of section IV.A.6 of this Order).

f. The objective of the TIE shall be to identify the substance or combination of substances causing the observed toxicity. All reasonable efforts using currently available TIE methods shall be employed.

g. As toxic substances are identified or characterized, the Discharger shall continue the TRE by determining the sources and evaluating alternative strategies for reducing or eliminating the substances from the discharge. All reasonable steps shall be taken to reduce toxicity to levels consistent with chronic toxicity evaluation parameters.

h. Many recommended TRE elements parallel required or recommended efforts of source control, pollution prevention, and storm water control programs. TRE efforts should be coordinated with such efforts. To prevent duplication of efforts, evidence of complying with requirements or recommended efforts of such programs may be acceptable to comply with TRE requirements.

i. The Regional Water Board recognizes that chronic toxicity may be episodic and identification of causes of, and reduction of, sources of chronic toxicity may not be successful in all cases. Consideration of enforcement action by the Regional Water Board will be based in part on the Discharger's actions and efforts to identify and control or reduce sources of consistent toxicity.

V. LAND DISCHARGE MONITORING REQUIREMENTS

Not Applicable.

VI. RECEIVING WATER MONITORING REQUIREMENTS

The Discharger shall conduct receiving water monitoring at monitoring stations C-1, C-2, and C-3 according to Table E-3 using the analytical methods described in 40 CFR 136. The monitoring frequency shall be twice per year, at about six month intervals.

Table E-3. Receiving Water Monitoring

Parameter	Units	Sample Type
pH	Standard units	Grab
Temperature	^{o}F	Grab
Dissolved Oxygen	mg/L	Grab
Dissolved Sulfide	mg/L	Grab
Hardness	mg/L as $CaCO_3$	Grab
Standard Observations [1]	---	Observation

Units:
^{o}F = degrees Fahrenheit
mg/L = milligrams per liter
Footnote:
[1] Standard observations are described in Attachment G.

VII. REPORTING REQUIREMENTS

A. General Monitoring and Reporting Requirements

The Discharger shall comply with all federal Standard Provisions (Attachment D) and Regional Standard Provisions (Attachment G) related to monitoring, reporting, and recordkeeping.

B. Self Monitoring Reports (SMRs)

1. At any time during the term of this Order, the State or Regional Water Board may notify the Discharger to electronically submit SMRs using the State Water Board's California Integrated Water Quality System (CIWQS) Program Web site (www.waterboards.ca.gov/ciwqs/index.html). Until such notification is given, the Discharger shall submit hard copy SMRs. The CIWQS web site will provide additional directions for SMR submittal in the event of a service interruption for electronic submittal.

2. The Discharger shall submit monthly and annual SMRs including the results of all required monitoring using USEPA-approved test methods or other test methods specified in this Order for each calendar month. If the Discharger

monitors any pollutant more frequently than required by this Order, the results of this monitoring shall be included in the calculations and reporting of the data submitted in the SMR. Monthly SMRs shall be due on the 30th day following the end of each calendar month, covering samples collected during that calendar month; Annual Reports shall be due on February 1 following each calendar year.

3. Monitoring periods and reporting for all required monitoring shall be completed according to the following schedule:

Table E-4. Monitoring Periods and Reporting Schedule

Sampling Frequency	Monitoring Period Begins On…	Monitoring Period
Continuous	Day after permit effective date	All
Hourly	Day after permit effective date	Hourly
Daily	Day after permit effective date	Midnight through 11:59 PM or any 24-hour period that reasonably represents a calendar day for purposes of sampling.
Weekly	Sunday following permit effective date or on permit effective date if on a Sunday	Sunday through Saturday
Monthly	First day of calendar month following permit effective date or on permit effective date if that date is first day of the month	1st day of calendar month through last day of calendar month
Quarterly	Closest of January 1, April 1, July 1, or October 1 following (or on) permit effective date	January 1 through March 31 April 1 through June 30 July 1 through September 30 October 1 through December 31
Semiannually	Closest of January 1 or July 1 following (or on) permit effective date	January 1 through June 30 July 1 through December 31
Annually	January 1 following (or on) permit effective date	January 1 through December 31
Per Discharge Event	Anytime during the discharge event or as soon as possible after aware of the event	At a time when sampling can characterize the discharge event

4. The Discharger shall report with each sample result the applicable Reporting Level (RL) and the current Method Detection Limit (MDL), as determined by the procedure in 40 CFR 136.

   The Discharger shall report the results of analytical determinations for the presence of chemical constituents in a sample using the following reporting protocols:

   a. Sample results greater than or equal to the RL shall be reported as measured by the laboratory (i.e., the measured chemical concentration in the sample).

b. Sample results less than the RL, but greater than or equal to the laboratory's MDL, shall be reported as "Detected, but Not Quantified," or DNQ. The estimated chemical concentration of the sample shall also be reported.

   For the purposes of data collection, the laboratory shall write the estimated chemical concentration next to DNQ as well as the words "Estimated Concentration" (may be shortened to "Est. Conc."). The laboratory may, if such information is available, include numerical estimates of the data quality for the reported result. Numerical estimates of data quality may be percent accuracy (± a percentage of the reported value), numerical ranges (low to high), or any other means considered appropriate by the laboratory.

c. Sample results less than the laboratory's MDL shall be reported as "Not Detected," or ND.

d. Dischargers are to instruct laboratories to establish calibration standards so that the ML value (or its equivalent if there is differential treatment of samples relative to calibration standards) is the lowest calibration standard. At no time is the Discharger to use analytical data derived from *extrapolation* beyond the lowest point of the calibration curve.

5. The Discharger shall submit SMRs in accordance with the following requirements:

   a. The Discharger shall arrange all reported data in a tabular format. The data shall be summarized to clearly illustrate whether the facility is operating in compliance with interim and final effluent limitations. The Discharger is not required to duplicate the submittal of data entered in a tabular format within CIWQS. When electronic submittal of data is required and CIWQS does not provide for entry into a tabular format within the system, the Discharger shall electronically submit the data in a tabular format as an attachment.

   b. The Discharger shall attach a cover letter to the SMR. The information contained in the cover letter shall clearly identify violations of the WDRs, discuss corrective actions taken or planned, and the proposed time schedule for corrective actions. Identified violations shall include a description of the requirement that was violated and a description of the violation.

   c. The Discharger shall submit SMRs to the Regional Water Board, signed and certified as required by the federal Standard Provisions (Attachment D), to the address listed below:

California Regional Water Quality Control Board
San Francisco Bay Region
1515 Clay Street, Suite 1400
Oakland, CA 94612
ATTN: NPDES Wastewater Division

C. Discharge Monitoring Reports

1. As described in Section XI.B.1 above, at any time during the term of this Order, the State or Regional Water Board may notify the Discharger to electronically submit SMRs that will satisfy federal requirements for submittal of Discharge Monitoring Reports (DMRs). Until such notification is given, the Discharger shall submit DMRs in accordance with the requirements described below.

2. Once notified by the State or Regional Water Board, the Discharger shall submit hard copy DMRs. DMRs must be signed and certified as required by the Federal Standard Provisions (Attachment D). The Discharger shall submit the original DMR and one copy of the DMR to one of the addresses listed below:

Standard Mail	FedEx/UPS/Other Private Carriers
State Water Resources Control Board Division of Water Quality c/o DMR Processing Center PO Box 100 Sacramento, CA 95812-1000	State Water Resources Control Board Division of Water Quality c/o DMR Processing Center 1001 I Street, 15th Floor Sacramento, CA 95814

3. All discharge monitoring results must be reported on the official USEPA pre-printed DMR forms (EPA Form 3320-1). Forms that are self-generated will not be accepted unless they follow the exact same format as EPA Form 3320-1.

D. Other Reports

The Discharger shall report the results of any special studies, monitoring, and reporting required by Section VI.C.2 (Special Studies, Technical Reports, and Additional Monitoring Requirements) of the Order with the first monthly SMR following the respective due date. The Discharger shall include a report of progress toward meeting compliance schedules established by section VI.C.2 of the Order in the annual SMR.

ATTACHMENT F – FACT SHEET

I. Permit Information 2
II. Facility Description 3
III. Applicable Plans, Policies, and Regulations 6
IV. Rationale For Effluent Limitations and Discharge Specifications 8
V. Rationale for Receiving Water Limitations 27
VI. Rationale for Monitoring and Reporting Requirements 27
VII. Rationale for Provisions 28
VIII. Public Participation 29

List of Tables

Table F-1. Facility Information 2
Table F-2. Outfall Location 4
Table F-3. Effluent Limitations (Order No. R2-2005-0019) and Monitoring Data for Conventional and Non-Conventional Pollutants 4
Table F-4. Effluent Limitations (Order No. R2-2005-0019) and Monitoring Data for Toxic Pollutants 4
Table F-5. Compliance with Previous Order Provisions 5
Table F-6. Basin Plan Beneficial Uses of Suisun Bay 6
Table F-7. NSPS Concentrations for Low Volume Waste Sources 12
Table F-8. NSPS Mass Limits for Low Volume Wastes Sources 12
Table F-9. Basin Plan Table 4-2 Limits 12
Table F-10. Reasonable Potential Analysis Summary 18
Table F-11. Effluent Limit Calculations 24

FACT SHEET

As described in Section II of this Order, this Fact Sheet includes the legal requirements and technical rationale that serve as the basis for the requirements of this Order.

This Order has been prepared under a standardized format to accommodate a broad range of discharge requirements for dischargers in California. Only those sections or subsections of this Order that are specifically identified as "not applicable" have been determined not to apply to this Discharger. Sections or subsections of this Order not specifically identified as "not applicable" fully apply to this Discharger.

I. PERMIT INFORMATION

The following table summarizes administrative information related to the GWF Power Systems Nichols Road Power Plant (Site V).

Table F-1. Facility Information

WDID	2 071170002
Discharger	GWF Power Systems, L.P.
Name of Facility	GWF Power Systems Nichols Road (Site V) Plant
Facility Address	555 Nichols Road
	Bay Point, CA 94565
	Contra Costa County
Facility Contact, Title, Phone	Mark Kehoe, Director of Environmental and Safety Programs, 925-431-1440
Authorized Person to Sign and Submit Reports	Same as above
Mailing Address	4300 Railroad Avenue, Pittsburg, CA 94565
Billing Address	Same as Mailing Address
Type of Facility	Power Plant
Major or Minor Facility	Minor
Threat to Water Quality	3
Complexity	C
Facility Permitted Flow	0.125 million gallons per day (MGD) maximum flow, 0.053 MGD average flow
Watershed	Suisun Bay
Receiving Water	Suisun Bay
Receiving Water Type	Estuarine

A. GWF Power Systems, L.P. (the Discharger) owns and operates an 18.2 megawatt power plant (Plant). The Plant produces electricity by a steam turbine through the combustion of petroleum coke. The Plant discharges water from its cooling tower to prevent the buildup of dissolved solids as cooling water is lost through evaporation.

For the purposes of this Order, references to the "discharger" or "permittee" in applicable federal and state laws, regulations, plans, or policy are held to be equivalent to references to the Discharger herein.

B. The discharge of wastewater from the Plant to Suisun Bay, a water of the United States, is currently regulated by Order No. R2-2005-0019 (NPDES Permit No. CA0029122), which was adopted on May 18, 2005, became effective on May 19, 2005, and expired on May 18, 2010. The Discharger's discharge is also currently covered under Order No. 2007-0077 (NPDES Permit CA0038849), which superseded all requirements on mercury from wastewater discharges in the region. The mercury permit is unaffected by this Order.

C. The Discharger filed a Report of Waste Discharge dated September 28, 2009, and submitted an application for renewal of its NPDES permit.

II. FACILITY DESCRIPTION

A. Description of the Cooling Water Discharge

Wastewater is produced and discharged from the Discharger's cooling water operations. The Plant produces electricity by steam generation through the combustion of petroleum coke, and this produces wastewater that must be disposed of to prevent the buildup of excess solids. The process works by superheating steam that expands through a turbine, producing electricity. The steam is then condensed and recycled back to the boiler. Most of the water at the Plant is used by the cooling tower. About 5.6 gallons per minute (gpm) of hot water from the boiler/condenser loop (boiler blowdown) is mixed with the water in the cooling tower. The cooling tower cools the water by continuously circulating about 12,000 gpm of water over a tower about 40 feet tall. The water is spread out into a thin layer at the top of the tower and is allowed to fall over baffles, cooling the water through evaporation on its way to a reservoir at the bottom. About 204 gpm is lost through evaporation in the tower and about 37 gpm of cooling tower blowdown is discharged to Suisun Bay through a deep-water outfall. About 241 gpm of source water (50% municipal drinking water supplied by Cal Cities Water and 50% untreated water from the Contra Costa Canal) is sent to the cooling tower to make up for the water lost through evaporation and discharge. The cooling tower also receives about 10 gpm of reverse osmosis reject water and about 0.15 gpm of auxiliary cooling water, equipment washdown water, and storm water. The Discharger adds a microbicide, a dispersant, a corrosion inhibitor, and a water conditioner to the boiler.

The Discharger collects and uses most of the storm water that falls on site for cooling water (about 95%) and discharges very little to the storm drains. The Discharger is covered under the Statewide General Permit for Industrial Stormwater Discharges (NPDES General Permit CAS000001). The Discharger has developed and maintains a Stormwater Pollution Prevention Plan.

B. Discharge Points and Receiving Waters

Table F-2 provides the location of the discharge point and the receiving water.

Table F-2. Outfall Location

Discharge Point	Effluent Description	Discharge Point Latitude	Discharge Point Longitude	Receiving Water
E-001	Cooling Tower Blowdown	38º 03' 15" N	121º 59' 15" W	Suisun Bay

Suisun Bay is located in the Suisun Bay Watershed.

C. Summary of Existing Requirements and Self-Monitoring Report Data

Tables F-3 (conventional and non-conventional pollutants) and F-4 (toxic pollutants) show recent monitoring data and the effluent limitations contained in the previous permit (No. R2-2005-0019).

Table F-3. Previous Effluent Limitations and Monitoring Data for Conventional and Non-Conventional Pollutants

Parameter	units	Limitations		Monitoring Data (1/06 to 11/09)			
		Daily Maximum	Monthly Average	Highest Daily Discharge	Average Daily Discharge	Highest Monthly Average	Average Monthly Discharge
TSS concentration	mg/L	45	30	33	6.8±5.6	23	6.6±4.6
TSS load	kg/d	15.70	10.47	10.8	1.75±1.73	5.1	1.34±1.0
Oil and Grease concentration	mg/L	20	10	No samples above detection limit			
Oil and Grease load	kg/d	6.98	3.49				
Settleable Matter	mg/L	0.2	0.1	No samples above detection limit			
pH	Standard units	6.0-9.0		6.1 minimum 8.7 maximum			
Chlorine residual	mg/L	0.0 [1]		No samples taken			
Temperature [2]	°F	86	---	79	68.2±4.1	---	---

Footnotes to Table F-3:
[1] Limitation applicable only if chlorine is used. Chlorine was not used during permit cycle.
[2] Temperatures are daily averages.
Units:
mg/L = milligrams per liter
kg/d = kilograms per day
°F = degrees Fahrenheit

Table F-4. Previous Effluent Limitations and Monitoring Data for Toxic Pollutants

Parameter	Units	Interim Daily Maximum Effluent Limits	Monitoring Data (1/06 to 11/09)	
			Monthly Maximum	Monthly Average
Copper	µg/L	36	33	21.4±4.9
Lead	µg/L	34	6.9	2.1±1.4
Mercury	µg/L	0.071	0.034	0.017±0.008

Parameter	Units	Interim Daily Maximum Effluent Limits	Monitoring Data (1/06 to 11/09)	
			Monthly Maximum	Monthly Average
Nickel	µg/L	92.9	17	6.9±3.0
Selenium	µg/L	34.6	4.9	1.4±0.8
Zinc	µg/L	562	154	41.2±21.4
Cyanide	µg/L	5	9.0	3.4±2.0
4,4-DDE	µg/L	0.05	No samples above detection limit	
Dieldrin	µg/L	0.01	No samples above detection limit	

Units:
µg/L = micrograms per liter

D. Compliance Summary

1. **Compliance with Numeric Effluent Limits.** No exceedances of numeric effluent limits were observed during the previous permit term.

2. **Acute toxicity.** The Discharger's quarterly acute toxicity monitoring results from January 2006 – December 2009 on fathead minnow ranged from 75% survival to 100% survival in 100% effluent. There were no acute toxicity violations.

3. **Compliance with Previous Permit Provisions.** Table F-5 lists the special activities required by the previous permit and the status of those requirements.

Table F-5. Compliance with Previous Permit Provisions

Provision Number	Requirement	Status of Completion
D.4	Cyanide Compliance Schedule	Discharger satisfied requirements
D.5	Pollution Prevention/Minimization Plan	Discharger satisfied requirements
D.6	Compliance Attainability Analysis for Lead, Nickel, and Zinc	Discharger satisfied requirements
D.7	Storm Water Pollution Prevention Plan (SWPPP)	Discharger satisfied requirements

E. Planned Changes

The Discharger has not proposed any operational or equipment changes to the Plant.

III. APPLICABLE PLANS, POLICIES, AND REGULATIONS

The requirements contained in the Order are based on the requirements and authorities described in this section.

A. Legal Authorities

This Order is issued pursuant to Clean Water Act (CWA) section 402 and implementing regulations adopted by the USEPA, and California Water Code (CWC) Chapter 5.5, Division 7 (commencing with section 13370). It will serve as an NPDES permit for point source discharges from the Plant to surface waters. This Order also serves as Waste Discharge Requirements (WDRs) pursuant to CWC Article 4, Chapter 4, Division 7 (commencing with section 13260).

B. California Environmental Quality Act (CEQA)

Under CWC section 13389, this action to adopt an NPDES permit is exempt from the provisions of CEQA.

C. State and Federal Regulations, Policies, and Plans

1. **Water Quality Control Plans.** The *Water Quality Control Plan for the San Francisco Bay Basin* (the Basin Plan) is the Regional Water Board's master water quality control planning document. It designates beneficial uses and water quality objectives for waters of the State, including surface waters and groundwater. It also includes programs of implementation to achieve water quality objectives. The Basin Plan was adopted by the Regional Water Board and approved by the State Water Resources Control Board, USEPA, and the Office of Administrative Law, as required. Requirements of this Order implement the Basin Plan.

   Table F-6 lists the beneficial uses of Suisun Bay as specified in the Basin Plan.

Table F-6. Beneficial Uses of Suisun Bay

Receiving Water Name	Beneficial Uses
Suisun Bay	Ocean, Commercial, and Sport Fishing (COMM) Industrial Service Supply (IND) Industrial Process Supply (PROC) Estuarine Habitat (EST) Fish Spawning (SPWN) Wildlife Habitat (WILD) Water Contact Recreation (REC1) Non-Contact Water Recreation (REC2) Navigation (NAV) Fish Migration (MIGR) Preservation of Rare and Endangered Species (RARE)

2. **Thermal Plan.** The State Water Board adopted a Water Quality Control Plan for the Control of Temperature in Coastal and Interstate Water and Enclosed Bays and Estuaries of California (Thermal Plan) on May 18, 1972, and amended this plan on September 18, 1975. This plan contains temperature objectives for surface waters. Requirements of this Order implement the Thermal Plan by imposing temperature restrictions on the discharge.

3. **National Toxics Rule (NTR) and California Toxics Rule (CTR).** USEPA adopted the NTR on December 22, 1992, and amended it on May 4, 1995, and November 9, 1999. About 40 criteria in the NTR applied in California. On May 18, 2000, USEPA adopted the CTR. The CTR promulgated new toxics criteria for California and, in addition, incorporated the previously adopted NTR criteria that applied in the State. The State Water Board amended the CTR on February 13, 2001. These rules contain water quality criteria for priority toxic pollutants.

4. **State Implementation Policy.** On March 2, 2000, the State Water Board adopted the *Policy for Implementation of Toxics Standards for Inland Surface Waters, Enclosed Bays, and Estuaries of California* (State Implementation Policy or SIP*)*. The SIP became effective on April 28, 2000, with respect to the priority pollutant criteria USEPA promulgated for California through the NTR and the priority pollutant objectives the Regional Water Board established in the Basin Plan. The SIP became effective on May 18, 2000, with respect to the priority pollutant criteria USEPA promulgated through the CTR. The State Water Board adopted amendments to the SIP on February 24, 2005, which became effective on July 13, 2005. The SIP establishes implementation provisions for priority pollutant objectives and provisions for chronic toxicity control. Requirements of this Order implement the SIP.

5. **Alaska Rule.** On March 30, 2000, USEPA revised its regulation that specifies when new and revised state and tribal water quality standards (WQS) become effective for CWA purposes [40 CFR 131.21, 65 Fed. Reg. 24641 (April 27, 2000)]. Under the revised regulation (also known as the Alaska Rule), new and revised standards submitted to USEPA after May 30, 2000, must be approved by USEPA before being used for CWA purposes. The final rule also provides that standards already in effect and submitted to USEPA by May 30, 2000, may be used for CWA purposes, whether or not approved by USEPA.

6. **Antidegradation Policy.** 40 CFR 131.12 requires that State water quality standards include an antidegradation policy consistent with the federal policy. The State Water Board established California's antidegradation policy through State Water Board Resolution 68-16, which incorporates the federal antidegradation policy where the federal policy applies under federal law.

Resolution 68-16 requires that existing water quality be maintained unless degradation is justified based on specific findings. The Regional Water Board's Basin Plan implements, and incorporates by reference, both the State and federal antidegradation policies. The permitted discharge is consistent with the antidegradation provisions of 40 CFR 131.12 and Resolution 68-16.

7. **Anti-Backsliding Requirements.** CWA sections 402(o)(2) and 303(d)(4), and 40 CFR 122.44(l), prohibit backsliding in NPDES permits. These anti-backsliding provisions require that effluent limitations in a reissued permit to be as stringent as those in the previous permit, with some exceptions in which limitations may be relaxed. The permitted discharge is consistent with anti-backsliding requirements.

D. Impaired Water Bodies on CWA 303(d) List

In November 2006, the USEPA approved a revised list of impaired water bodies prepared by the State [the 303(d) list] pursuant to CWA section 303(d), which requires identification of specific water bodies where it is expected that water quality standards will not be met after implementation of technology-based effluent limitations on point sources. Suisun Bay is 303(d) listed for chlordane, DDT, dieldrin, dioxin compounds, exotic species, furan compounds, mercury, nickel, PCBs, dioxin-like PCBs, and selenium. The SIP requires final effluent limitations for all 303(d)-listed pollutants to be consistent with total maximum daily loads and associated wasteload allocations.

IV. RATIONALE FOR EFFLUENT LIMITATIONS AND DISCHARGE SPECIFICATIONS

The CWA requires point source dischargers to control the amount of conventional, non-conventional, and toxic pollutants that are discharged into waters of the United States. The control of pollutants discharged is established through effluent limitations and other requirements in NPDES permits. There are two principal bases for effluent limitations in the NPDES regulations: 40 CFR 122.44(a) requires that permits include applicable technology-based limitations and standards; and 40 CFR 122.44(d) requires that permits include water quality-based effluent limitations (WQBELs) to attain and maintain applicable numeric and narrative water quality criteria to protect the beneficial uses of the receiving water. Where Reasonable Potential has been established for a pollutant, but there is no numeric criterion or objective for the pollutant, WQBELs may be established (1) using USEPA criteria guidance under CWA section 304(a), supplemented where necessary by other relevant information; (2) using an indicator parameter for the pollutant of concern; or (3) using a calculated numeric water quality criterion, such as a proposed state criterion or policy interpreting the state's narrative criterion, supplemented with other relevant information, as provided in 40 CFR 122.44(d)(1)(vi).

A. Discharge Prohibitions

1. **Discharge Prohibition III.A (No discharge other than that described in this Order):** This prohibition is based on CWC section 13260, which requires filing a Report of Waste Discharge before discharges can occur. Discharges not described in the Report of Waste Discharge, and subsequently in this Order, are prohibited.

2. **Discharge Prohibition III.B (Discharge that does not receive a minimum 10:1 dilution):** This prohibition is based on Basin Plan Table 4-1, Discharge Prohibition 1, which prohibits the discharge of any wastewater that does not receive a minimum initial dilution of at least 10:1. The prohibition is also to ensure that those limits calculated using this dilution ratio are protective of water quality.

3. **Discharge Prohibition III.C (No discharge of detectable priority pollutants):** This prohibition is based on 40 CFR 423.15(j)(1).

4. **Discharge Prohibition III.D (No discharge of polychlorinated biphenyl compounds):** This prohibition is based on 40 CFR 423.12(b)(2).

B. Temperature Effluent Limitation

The temperature effluent limitation is based on the Thermal Plan. The discharge is considered an existing, continuous discharge of thermal waste as defined in the Thermal Plan. The discharge is low volume cooling tower blowdown. The Thermal Plan requires that the temperature of the discharge be less than 86ºF, and that:

- the maximum temperature not exceed the natural receiving water temperature by more than 20ºF,
- the discharge not create a zone, defined by water temperatures of more than 1°F above natural receiving water temperature, that exceeds 25 percent of the cross sectional area of a main river channel at any point,
- the discharge not cause a surface water temperature rise greater than 4°F above the receiving waters at any time and place, and
- additional limitations be imposed when necessary to ensure protection of beneficial uses.

Regional Monitoring Program data from 1993-2008 indicate that the average temperature of Suisun Bay was 62.9±7.9ºF and the range was 48.2-72.5ºF. The daily average temperature of the effluent over the past permit cycle (2005-2009) was 68.2±4.1ºF, and the highest daily average temperature was 79ºF. The discharge flow is very small compared to the size of the receiving

water, the average temperature of the discharge is only slightly elevated over the receiving water temperature, and the deep-water outfall is equipped with a diffuser. For these reasons, the discharge is unlikely to exceed the natural receiving water temperature by more than 20ºF, create an elevated temperature zone larger than 25 percent of the area of Suisun Bay, or cause surface water temperatures to rise more than 4ºF above receiving water temperatures. No additional limitations appear necessary to protect beneficial uses.

C. Technology-Based Effluent Limitations

a. Scope and Authority

CWA Section 301(b) and implementing regulations at 40 CFR 122.44 require that permits include conditions meeting applicable technology-based requirements at a minimum, and any more stringent effluent limitations necessary to meet applicable water quality standards. The CWA requires that technology-based effluent limitations be established based on several levels of controls:

1. Best practicable treatment control technology (BPT) represents the average of the best performance by plants within an industrial category or subcategory. BPT standards apply to toxic, conventional, and non-conventional pollutants.

2. Best available technology economically achievable (BAT) represents the best existing performance of treatment technologies that are economically achievable within an industrial point source category. BAT standards apply to toxic and non-conventional pollutants.

3. Best conventional pollutant control technology (BCT) represents the control from existing industrial point sources of conventional pollutants, including biochemical oxygen demand (BOD), total suspected solids (TSS), fecal coliform, pH, and oil and grease. The BCT standard is established after considering the "cost reasonableness" of the relationship between the cost of attaining a reduction in effluent discharge and the benefits that would result, and also the cost effectiveness of additional industrial treatment beyond BPT.

4. New source performance standards (NSPS) represent the best available demonstrated control technology standards. The intent of NSPS guidelines is to set limitations that represent state-of-the-art treatment technology for new sources.

The CWA requires USEPA to develop effluent limitations, guidelines, and standards for many source categories representing application of BPT, BAT,

BCT, and NSPS. The discharge authorized by this Order must meet minimum federal technology-based requirements based on Effluent Limitations Guidelines (ELGs) for the Steam Electric Power Generating Point Source Category in 40 CFR 423.

b. Steam Electric Power Generating Point Source Category ELGs

The discharge consists of cooling tower blowdown and low volume waste sources. The low volume waste sources (boiler/steam condensate, reverse osmosis/demineralizer wastewater, equipment washdown water, and auxiliary cooling water) are added to the cooling tower as make-up water and the combined flow is discharged.

The Plant was constructed after USEPA promulgated its Steam Electric Power Generating Point Source Category ELGs in 1982; therefore, the Plant is subject to NSPS requirements. It is not subject to the BPT, BAT, and BCT requirements in 40 CFR 423. The NSPS requirements in 40 CFR 423.15 apply to the Plant's low volume waste sources and cooling tower blowdown, and control pH, PCBs, TSS, oil and grease, free available chlorine, and priority pollutants (those listed in Attachment G, Table C), including chromium and zinc.

Many ELG requirements in 40 CFR 423 are to be derived from reasonable estimates of actual production. In this case, the requirements are to be based on actual long-term average flows from low volume waste sources and cooling tower blowdown [USEPA Memorandum dated December 18, 1984, from J. William Jordan, Chief of NPDES Technical Support Branch to Regional Permits Branch Chiefs]. The ELGs account for variations that occur within long-term flows. Over the most recent five years, the average low volume waste source flow was 0.023 MGD, and the average cooling tower blowdown flow was 0.053 MGD.

While the ELGs have different guidelines for cooling tower blowdown and low volume waste sources, monitoring occurs only after the discharge is combined.

The NSPS requirements control pH, PCBs, TSS, oil and grease, and free available chlorine.

pH. The pH of the discharge must be within the range of 6.0 to 9.0 [40 CFR 423.15(a)]. Basin Plan Table 4-2 also imposes this requirement.

PCBs. Discharges of PCBs, such as those commonly used for transformer fluid, must be prohibited [40 CFR 423.15(b)].

TSS and Oil and Grease. Discharge quantities of TSS and oil and grease from low volume waste sources must not exceed the low volume waste sources flow times the concentrations in Table F-7 [40 CFR 423.15(c)].

Table F-7. NSPS Concentrations for Low Volume Waste Sources

Pollutant	Daily Maximum	Monthly Average
Units	**mg/L**	**mg/L**
Total Suspended Solids	100.0	30.0
Oil and Grease	20.0	15.0

These limits only apply to low volume waste sources and may be imposed as concentrations or masses. Based on the average flow of 0.023 MGD, the allowable TSS and oil and grease masses for the low volume waste sources are as shown in Table F-8.

Table F-8. NSPS Allowable Masses for Low Volume Waste Sources

Pollutant	Daily Maximum	Monthly Average
Units	**kg/day**	**kg/day**
Total Suspended Solids	8.7	2.6
Oil and Grease	1.7	1.3

Though mass limits for the low volume waste sources can be calculated as shown above, the Discharger currently does not wish to directly determine compliance with these NSPS limits. This is because it does not sample the low volume wastes since it reuses the streams as makeup water in the cooling tower. However, an indirect way to assure compliance with the mandated BPT limits can be accomplished through application of Basin Plan Table 4-2 limitations on the cooling tower blowdown that contains the low volume waste sources. The Basin Plan sets forth technology-based limits the Regional Water Board may apply as long as they do not preempt the ELGs. Based on Basin Plan Table 4-2, allowable TSS and oil and grease concentrations from cooling tower blowdown must not exceed the following concentrations.

Table F-9. Basin Plan Table 4-2 Limits

Pollutant	Daily Maximum	Weekly Average[1]	Monthly Average[1]
Units	**mg/L**	**mg/L**	**mg/L**
Total Suspended Solids	--	45	30
Oil and Grease	20	--	10

[1] The Basin Plan specifies 7-day and 30-day limitations. These are reflected as weekly and monthly averages above in accordance with USEPA Region IX letter of June 28, 1985, from Dave Jones, California Branch Chief, to Michael Campos, Executive Director of the State Water Board.

Based on the information above, this Order contains the following technology-based effluent limits for TSS and oil and grease:

- This Order imposes a Monthly average TSS limit of 30 mg/L on the cooling tower blowdown discharge (which contains the low volume waste discharge). This Basin Plan Table 4-2 limit is the same as the ELG concentration for low volume waste sources; therefore, this limit is consistent with the ELGs. It is also consistent with the previous permit.

- This Order imposes a daily maximum TSS limit of 45 mg/L on the cooling tower blowdown discharge. This limit is more stringent than both the ELGs for low volume waste sources and Basin Plan Table 4-2, which specifies a weekly average limit of 45 mg/L (rather than a daily maximum limit). Nevertheless, this limit is consistent with the previous permit and is retained to avoid unnecessary backsliding.

- This Order imposes a monthly average oil and grease limit of 10 mg/L on the cooling tower blowdown discharge. This Basin Plan Table 4-2 limit is more stringent than the ELGs that apply only to low volume waste sources. Nevertheless, this more stringent limit is consistent with the previous permit and is retained to avoid unnecessary backsliding.

- This Order imposes a daily maximum oil and grease limit of 20 mg/L on the cooling tower blowdown discharge. This Basin Plan Table 4-2 limit is the same as the ELG concentration for low volume waste sources; therefore, this limit is consistent with the ELGs. It is also consistent with the previous permit.

This Order does not retain the mass-based limits from the previous permit because they are unnecessary. The ELGs may be imposed as concentration-based limits or mass-based limits. Since any mass-based limits would be based on the concentration-based limits, they would be redundant.

Free Available Chlorine. The daily mass of free available chlorine from cooling tower blowdown must not exceed the cooling tower blowdown flow times 0.5 mg/L, and the 30-day average mass must not exceed the flow times 0.2 mg/L [40 CFR 423.15(j)(1)]. Basin Plan Table 4-2 requires that the total residual chlorine concentration not exceed 0.0 mg/L; therefore, the Order contains only the more stringent Basin Plan requirement.

Chromium and Zinc. The daily maximum and 30-day average masses of chromium and zinc from cooling tower blowdown must not exceed the cooling tower blowdown flow times 0.2 mg/L (chromium) and 1.0 mg/L (zinc) [40 CFR 423.15(j)(2)]. The Order contains these concentration limits for chromium. However, the Water Quality-Based Effluent Limitations (WQBELs) for zinc are more stringent than the Technology-Based Limitations, and therefore apply.

Other Priority Pollutants. With the exception of chromium and zinc, concentrations of any priority pollutant contained in any chemical added for cooling tower maintenance must not be detectable [40 CFR 423.15(j)(2)]. This Order prohibits the discharge of detectable concentrations of priority pollutant used for cooling tower maintenance, excluding chromium or zinc.

D. Water Quality-Based Effluent Limitations (WQBELs)

WQBELs have been derived to implement water quality objectives (WQOs) that protect beneficial uses. Both the beneficial uses and the WQOs have been approved pursuant to federal law. The procedures for calculating individual WQBELs are based on the SIP and the Basin Plan. Most beneficial uses and WQOs contained in the Basin Plan were approved under State law and submitted to and approved by USEPA prior to May 30, 2000. Any WQOs and beneficial uses submitted to USEPA prior to May 30, 2000, but not approved by USEPA before that date, are nonetheless applicable water quality standards for purposes of the Clean Water Act pursuant to 40 CFR 131.21(c)(1). Collectively, this Order's restrictions on individual pollutants are no more stringent than the applicable CWA water quality standards.

1. Scope and Authority

a. 40 CFR 122.44(d)(1)(i) requires permits to include effluent limitations for pollutants (including toxicity) that are or may be discharged at levels that cause, have reasonable potential to cause, or contribute to an excursion of a water quality standard, including numeric and narrative objectives within a standard. The process for determining Reasonable Potential and calculating WQBELs when necessary is intended to protect the designated beneficial uses of the receiving water as specified in the Basin Plan, and to achieve applicable WQOs contained in other State plans and policies, and applicable WQC contained in the CTR and NTR.

b. NPDES regulations and the SIP provide the basis to establish maximum daily effluent limitations (MDELs).

(1) NPDES Regulations. 40 CFR 122.45(d) states: "For continuous discharges all permit effluent limitations, standards, and prohibitions, including those necessary to achieve water quality standards, shall *unless impracticable* be stated as maximum daily and average monthly discharge limitations for all discharges other than publicly owned treatment works."

(2) SIP. The SIP (page 8, Section 1.4) requires WQBELs to be expressed as MDELs and average monthly effluent limitations (AMELs).

c. MDELs are used in this Order to protect against acute water quality effects. The MDELs are necessary for preventing fish kills or mortality to aquatic organisms.

2. Applicable Water Quality Objectives

The WQOs applicable to the receiving water for this discharge are from the Basin Plan; the CTR, established by USEPA at 40 CFR 131.38; and the NTR, established by USEPA at 40 CFR 131.36. Some pollutants have WQOs established by more than one of these three sources.

a. Basin Plan. The Basin Plan specifies numeric WQOs for 10 priority toxic pollutants, as well as narrative WQOs for toxicity and bioaccumulation in order to protect beneficial uses. The pollutants for which the Basin Plan specifies numeric objectives are arsenic, cadmium, chromium (VI), copper, lead, mercury, nickel, silver, zinc, and cyanide. The narrative toxicity objective states in part "[a]ll waters shall be maintained free of toxic substances in concentrations that are lethal to or that produce other detrimental responses in aquatic organisms." The bioaccumulation objective states in part that "[c]ontrollable water quality factors shall not cause a detrimental increase in concentrations of toxic substances found in bottom sediments or aquatic life. Effects on aquatic organisms, wildlife, and human health will be considered." Effluent limitations and provisions contained in this Order are based on available information to implement these objectives.

b. CTR. The CTR specifies numeric aquatic life criteria for 23 priority toxic pollutants and numeric human health criteria for 57 priority toxic pollutants. These criteria apply to all inland surface waters and enclosed bays and estuaries of the San Francisco Bay Region, although the Basin Plan includes numeric objectives for certain of these priority toxic pollutants that supersede the CTR criteria.

c. NTR. The NTR establishes numeric aquatic life criteria for selenium and numeric human health criteria for 33 toxic organic pollutants for waters of San Francisco Bay upstream to and including Suisun Bay and the Sacramento River-San Joaquin River Delta.

d. Basin Plan Receiving Water Salinity Policy. The Basin Plan (like the CTR and the NTR) states that the salinity characteristics (i.e., freshwater vs. saltwater) of the receiving water shall be considered in determining the applicable WQOs. Freshwater objectives shall apply to discharges to waters with salinities equal to or less than one part per thousand (ppt) at least 95 percent of the time. Saltwater criteria shall apply to discharges to waters with salinities equal to or greater than 10 ppt at least 95 percent of

the time in a normal water year. Suisun Bay has salinities that transition between these two categories (estuarine), so the criteria shall be the lower of the marine or freshwater criteria (the latter calculated based on ambient hardness) for each substance.

e. **Receiving Water Hardness.** Ambient hardness values are used to calculate freshwater WQOs that are hardness dependent. Hardness data are collected through the Regional Monitoring Program for water bodies in the San Francisco Bay region. The objectives for this Order were determined using a hardness value of 104 mg/L. The hardness was calculated using the adjusted geometric mean of hardness values at the Sacramento River and San Joaquin River RMP Stations. Consistent with 40 CFR 131.38(c)(4), values over 400 mg/L were set to 400 mg/L and a Water Effects Ratio (WER) of one (1) was used for the calculation of hardness-dependent WQBELs. These data are shown in Attachment 1 and represent the best available information for the hardness of the receiving water.

f. **Site-Specific Metals Translators (SSTs).** 40 CFR 122.45(c) requires that effluent limitations for metals be expressed as total recoverable metal. Since applicable metal WQOs are typically expressed as dissolved metal, factors or translators must be used to convert metals concentrations from dissolved to total recoverable and vice versa. The CTR includes default translators for NPDES permitting activities; however, site-specific conditions, such as water temperature, pH, suspended solids, and organic carbon, greatly impact the form of metal (dissolved, non-filterable, or otherwise) present in the water and therefore available to cause toxicity. In general, the dissolved form of a metal is more available and more toxic to aquatic life than non-filterable forms. Site-specific translators can be developed to account for site-specific conditions, thereby preventing exceedingly stringent or under protective WQOs. Default translators USEPA established in the CTR at 40 CFR 131.38(b)(2), Table 2, were used to calculate WQBELs for all applicable metals.

3. Determining the Need for WQBELs

Assessing whether a pollutant has "Reasonable Potential" is the fundamental step in determining whether or not a WQBEL is required. Using the methods prescribed in SIP section 1.3, effluent data were analyzed to determine if the discharge demonstrates Reasonable Potential. The Reasonable Potential Analysis (RPA) compares the effluent data with numeric and narrative WQOs in the Basin Plan, the NTR, and the CTR.

a. **Reasonable Potential Methodology.** The RPA identifies the observed maximum effluent concentration (MEC) for each pollutant based on

existing effluent data. There are three triggers in determining Reasonable Potential.

(1) The first trigger (Trigger 1) is activated if the MEC is greater than or equal to the lowest applicable WQO (MEC ≥ WQO), which has been adjusted, if appropriate, for pH, hardness, and translator data. If the MEC is greater than or equal to the adjusted WQO, then that pollutant has Reasonable Potential, and a WQBEL is required.

(2) The second trigger (Trigger 2) is activated if the observed maximum ambient background concentration (B) is greater than the adjusted WQO (B>WQO), and the pollutant is detected in any of the effluent samples (MEC>ND).

(3) The third trigger (Trigger 3) is activated if a review of other information determines that a WQBEL is required to protect beneficial uses, even though both MEC and B are less than the WQO. A limitation may be required if necessary to protect beneficial uses.

b. Effluent Data. The RPA was based on the effluent monitoring data from February 2006 through September 2009.

c. Ambient Background Data. Ambient background values were used to determine reasonable potential and to calculate effluent limitations when necessary. The ambient background concentrations were the observed maximum detected water column concentrations from the Sacramento River RMP station. The SIP states that, for calculating WQBELs, ambient background concentrations are either the observed maximum ambient water column concentrations or, for objectives intended to protect human health from carcinogenic effects, the arithmetic mean of observed ambient water concentrations. The maximum ambient concentrations were used for the purposes of the RPA.

d. Reasonable Potential Determination. The MECs, most stringent applicable WQOs, and background concentrations used in the RPA are presented in Table F-10, below, along with the RPA result (Yes or No) for each pollutant analyzed. Reasonable Potential was not determined for all pollutants because there are not applicable WQOs for all pollutants and monitoring data are not available for others. Copper, lead, zinc, and cyanide demonstrate reasonable potential by Trigger 1.

Table F-10. Reasonable Potential Analysis Summary

CTR #	Priority Pollutants	MEC or Minimum DL (µg/L)	Governing WQO (µg/L)	Maximum Background or Minimum DL (µg/L)	RPA Results [c]
1	Antimony	0.73	6	<0.5	No
2	Arsenic	5.3	36	2.2	No
3	Beryllium	<0.5	4	<0.5	No
4	Cadmium	<0.25	1.0	<0.5	No
5b	Chromium (VI)	5	11	Not Available	No
6	**Copper**	**33**	**16**	9.8	**Yes**
7	**Lead**	**6.9**	**3.3**	2.3	**Yes**
9	Nickel (303d listed)	16	44	5.8	No
10	Selenium (303d listed)	4.9	5	<0.5	No
11	Silver	<0.24	2.2	<0.19	No
12	Thallium	<0.5	1.7	<0.5	No
13	**Zinc**	**154**	**86**	18	**Yes**
14	**Cyanide**	**9**	**2.9**	0.5	**Yes**
16	2,3,7,8-TCDD	<2.0E-09	1.3E-08	6.0E-09	No
17	Acrolein	<5	320	< 0.5	No
18	Acrylonitrile	<2	0.059	< 0.02	No
19	Benzene	<0.5	1	< 0.05	No
20	Bromoform	3.7	4.3	< 0.5	No
21	Carbon Tetrachloride	<0.5	0.25	0.06	No
22	Chlorobenzene	<0.5	70	< 0.5	No
23	Chlorodibromomethane	<0.5	0.41	< 0.05	Ud
24	Chloroethane	<0.5	No Criteria	< 0.5	Ud
25	2-Chloroethylvinyl ether	<1	No Criteria	< 0.5	Ud
26	Chloroform	<0.5	No Criteria	< 0.5	Ud
27	Dichlorobromomethane	<0.5	0.56	< 0.05	No
28	1,1-Dichloroethane	<0.5	5	< 0.05	No
29	1,2-Dichloroethane	<0.5	0.38	0.04	No
30	1,1-Dichloroethylene	<0.5	0.057	< 0.5	No
31	1,2-Dichloropropane	<0.5	0.52	< 0.5	No
32	1,3-Dichloropropylene	<0.5	0.5	Not Available	No
33	Ethylbenzene	<0.5	300	< 0.5	No
34	Methyl Bromide	<0.5	48	< 0.5	No
35	Methyl Chloride	<0.5	No Criteria	< 0.5	Ud
36	Methylene Chloride	<0.5	4.7	< 0.5	No
37	1,1,2,2-Tetrachloroethane	<0.5	0.17	< 0.05	No
38	Tetrachloroethylene	<0.5	0.8	< 0.05	No
39	Toluene	<0.5	150	< 0.3	No
40	1,2-Trans-Dichloroethylene	<0.5	10	< 0.5	No
41	1,1,1-Trichloroethane	<0.5	200	< 0.5	No
42	1,1,2-Trichloroethane	<0.5	0.6	< 0.05	No
43	Trichloroethylene	<0.5	2.7	< 0.5	No
44	Vinyl Chloride	<0.5	0.5	< 0.5	No
45	2-Chlorophenol	<1	120	Not Available	No
46	2,4-Dichlorophenol	<1	93	< 1.3	No
47	2,4-Dimethylphenol	<1	540	< 1.3	No
48	2-Methyl- 4,6-Dinitrophenol	<5	13	< 1.2	No
49	2,4-Dinitrophenol	<5	70	< 0.7	No
50	2-Nitrophenol	<5	No Criteria	< 1.3	Ud

CTR #	Priority Pollutants	MEC or Minimum DL (µg/L)	Governing WQO (µg/L)	Maximum Background or Minimum DL (µg/L)	RPA Results [c]
51	4-Nitrophenol	<5	No Criteria	< 1.6	Ud
52	3-Methyl 4-Chlorophenol	<1	No Criteria	< 1.1	Ud
53	Pentachlorophenol	<5	0.28	< 1	No
54	Phenol	<1	21000	< 1.3	No
55	2,4,6-Trichlorophenol	<1	2.1	< 1.3	No
56	Acenaphthene	<1	1200	0.0019	No
57	Acenaphthylene	<1	No Criteria	0.000492	Ud
58	Anthracene	<1	9600	0.000389	No
59	Benzidine	<5	0.00012	< 0.0003	No
60	Benzo(a)Anthracene	<1	0.0044	0.0011	No
61	Benzo(a)Pyrene	<1	0.0044	0.0008215	No
62	Benzo(b)Fluoranthene	<1	0.0044	0.0019	No
63	Benzo(ghi)Perylene	<1	No Criteria	0.0012465	Ud
64	Benzo(k)Fluoranthene	<1	0.0044	0.000928	No
65	Bis(2-Chloroethoxy)Methane	<1	No Criteria	< 10	Ud
66	Bis(2-Chloroethyl)Ether	<1	0.031	< 0.3	No
67	Bis(2-Chloroisopropyl)Ether	<1	1400	Not Available	No
68	Bis(2-Ethylhexyl)Phthalate	<5	1.8	0.68	Ud
69	4-Bromophenyl Phenyl Ether	<1	No Criteria	< 0.23	Ud
70	Butylbenzyl Phthalate	<1	3000	< 0.5	No
71	2-Chloronaphthalene	<1	1700	< 0.3	No
72	4-Chlorophenyl Phenyl Ether	<1	No Criteria	< 0.3	Ud
73	Chrysene	<1	0.0044	0.001067	No
74	Dibenzo(a,h)Anthracene	<1	0.0044	0.00067	No
75	1,2-Dichlorobenzene	<0.5	600	< 0.3	No
76	1,3-Dichlorobenzene	<0.5	400	< 0.3	No
77	1,4-Dichlorobenzene	<0.5	5	< 0.3	No
78	3,3 Dichlorobenzidine	<2	0.04	< 0.0002	No
79	Diethyl Phthalate	<1	23000	Not Available	No
80	Dimethyl Phthalate	<1	313000	Not Available	No
81	Di-n-Butyl Phthalate	<10	2700	1.72	No
82	2,4-Dinitrotoluene	<1	0.11	< 0.27	No
83	2,6-Dinitrotoluene	<1	No Criteria	< 0.29	Ud
84	Di-n-Octyl Phthalate	<1	No Criteria	Not Available	Ud
85	1,2-Diphenylhydrazine	<1	0.04	0.0087	No
86	Fluoranthene	<1	300	0.0034255	No
87	Fluorene	<1	1300	0.0024	No
88	Hexachlorobenzene	<0.5	0.00075	0.000109	No
89	Hexachlorobutadiene	<0.5	0.44	< 0.3	No
90	Hexachlorocyclopentadiene	<1	50	< 0.3	No
91	Hexachloroethane	<0.5	1.9	< 0.2	No
92	Indeno(1,2,3-cd)Pyrene	<1	0.0044	0.001317	No
93	Isophorone	<1	8.4	< 0.3	No
94	Naphthalene	<0.5	No Criteria	0.00681	Ud
95	Nitrobenzene	<1	17	< 0.25	No
96	N-Nitrosodimethylamine	<5	0.00069	< 0.3	No
97	N-Nitrosodi-n-Propylamine	<1	0.005	< 0.0002	No
98	N-Nitrosodiphenylamine	<1	5	< 0.001	No
99	Phenanthrene	<1	No Criteria	0.003442	Ud

CTR #	Priority Pollutants	MEC or Minimum DL (µg/L)	Governing WQO (µg/L)	Maximum Background or Minimum DL (µg/L)	RPA Results [c]
100	Pyrene	<1	960	0.00358	No
101	1,2,4-Trichlorobenzene	<0.5	5	< 0.3	No
102	Aldrin	<0.005	0.00013	0.00000404	No
103	Alpha-BHC	<0.01	0.0039	0.0003468	No
104	Beta-BHC	<0.005	0.014	0.000118	No
105	Gamma-BHC	<0.02	0.019	0.0010032	No
106	Delta-BHC	<0.005	No Criteria	0.000038	Ud
107	Chlordane (303d listed)	<0.05	0.00057	0.0003	No
108	4,4'-DDT (303d listed)	<0.01	0.00059	0.000349	No
109	4,4'-DDE (linked to DDT)	<0.01	0.00059	0.00092	No
110	4,4'-DDD	<0.01	0.00083	0.000347	No
111	Dieldrin (303d listed)	<0.01	0.00014	0.00038	No
112	Alpha-Endosulfan	<0.02	0.0087	0.0000571	No
113	beta-Endolsulfan	<0.01	0.0087	0.0000424	No
114	Endosulfan Sulfate	<0.05	110	0.000284	No
115	Endrin	<0.01	0.0023	0.00015	No
116	Endrin Aldehyde	<0.05	0.76	Not Available	No
117	Heptachlor	<0.01	0.00021	0.000011	No
118	Heptachlor Epoxide	<0.01	0.0001	0.000097	No
119-125	PCBs sum (303d listed)	<0.5	0.00017	0.0007923	No
126	Toxaphene	<0.5	0.0002	Not Available	No
	Total Ammonia (mg/L N)	0.55	1.2	0.18	No

Footnotes:

[a] The Maximum Effluent Concentration (MEC) and maximum background concentration are the actual detected concentrations unless preceded by a "<" sign, in which case the value shown is the minimum detection level.

[b] The MEC or maximum background concentration is "Not Available" when there are no monitoring data for the constituent.

[c] RPA Results = Yes, if MEC > WQO/WQC, B > WQO/WQC and MEC is detected, or Trigger 3;
= No, if MEC and B are < WQO/WQC or all effluent data are undetected;
= Undetermined (Ud), if no criteria have been promulgated or data are insufficient.

(1) Constituents with limited data. In some cases, Reasonable Potential cannot be determined because effluent data are limited, or ambient background concentrations are unavailable. The Discharger will continue to monitor for these constituents in the effluent using analytical methods that provide the best feasible detection limits. When additional data become available, further RPA will be conducted to determine whether to add numeric effluent limitations.

(2) Pollutants with no Reasonable Potential. WQBELs are not included in this Order for constituents that do not demonstrate Reasonable Potential; however, monitoring for those pollutants is still required.

The previous permit included WQBELs for nickel and selenium; however, because the RPA showed no reasonable potential for these

pollutants, these effluent limitations are not retained in this Order. The elimination of these effluent limits is consistent with anti-backsliding requirements in accordance with State Water Board Order WQ-2001-16.

4. WQBEL Calculations.

a. Pollutants with Reasonable Potential. WQBELs were developed for the pollutants determined to have reasonable potential to cause or contribute to exceedances of WQOs. The WQBELs were calculated based on appropriate WQOs and the procedures specified in SIP section 1.4. The WQOs used for each pollutant with Reasonable Potential are discussed below.

b. Dilution Credit. The SIP provides the basis for dilution credits. The Plant has a diffuser on its outfall to achieve a minimum initial dilution of at least 10:1. Provision VII.C.5 requires a study to verify this assumption. Based on review of RMP data from local and Central Bay monitoring stations, there is variability in receiving water quality, and the hydrology of the receiving water is complex. There is uncertainty, therefore, regarding the representative nature of ambient background data for effluent limitation calculations. Pursuant to SIP section 1.4.2.1, "dilution credit may be limited or denied on a pollutant-by-pollutant basis…." The Regional Water Board has determined that a conservative 10:1 (D=9) dilution credit is appropriate for most toxic priority pollutants to protect beneficial uses.

c. Calculation of Pollutant-Specific WQBELs

(1) Copper

(a) WQOs. The most stringent applicable WQOs for copper are from the Basin Plan for protection of freshwater aquatic life: 14 µg/L for acute and 16 µg/L for chronic, expressed as total metal, based on a hardness of 104 mg/L.

(b) RPA. This Order establishes effluent limitations for copper because the maximum effluent concentration (MEC, 33 µg/L) exceeds the governing WQO for copper, demonstrating Reasonable Potential by Trigger 1.

(c) WQBELs. WQBELs for copper, calculated according to SIP procedures with a coefficient of variation (CV) of 0.23, are 39 µg/L AMEL and 54 µg/L MDEL.

(d) Feasibility of Compliance. It is feasible for the Discharger to comply with the copper effluent limits because the effluent data show that the 95th percentile (30 µg/L) is less than the AMEL (39 µg/L); the 99th percentile (35 µg/L) is less than the MDEL (54 µg/L); and the mean (22 µg/L) is less than the long term average of the projected lognormal distribution of the effluent data set after accounting for effluent variability (32 µg/L). Attachment B to this Fact Sheet shows the probability distribution.

(e) Antibacksliding. The previous permit contained interim performance-based limits, but did not contain final WQBELs for copper, so anti-backsliding requirements are satisfied.

(2) Lead

(a) WQOs. The most stringent applicable WQOs for lead are from the Basin Plan for protection of freshwater aquatic life: 86 µg/L for acute and 3.3 µg/L for chronic, expressed as total metal, based on a hardness of 104 mg/L.

(b) RPA. This Order establishes effluent limitations for lead because the MEC (6.9 µg/L) exceeds the chronic WQO for this pollutant, demonstrating Reasonable Potential by Trigger 1.

(c) WQBELs. WQBELs for lead, calculated according to SIP procedures with a CV of 0.63, are 9.9 µg/L AMEL and 20 µg/L MDEL.

(d) Feasibility of Compliance. It is feasible for the Discharger to comply with the lead effluent limits because the effluent data show that the 95th percentile (5.7 µg/L) is less than the AMEL (9.9 µg/L); the 99th percentile (9.3 µg/L) is less than the MDEL (20 µg/L); and the mean (2.2 µg/L) is less than the long term average of the projected lognormal distribution of the effluent data set after accounting for effluent variability (6.2 µg/L). Attachment 2 to this Fact Sheet shows the probability distribution.

(e) Anti-backsliding. The previous permit contained interim performance-based limits, but did not contain final WQBELs for lead, so anti-backsliding requirements are satisfied.

(3) Zinc

(a) WQOs. The most stringent applicable WQOs for zinc are from the Basin Plan for protection of freshwater aquatic life: 95µg/L for

acute and 86 µg/L chronic, expressed as total metal, based on a hardness of 104 mg/L.

(b) RPA. This Order establishes effluent limitations for zinc because the MEC (154 µg/L) exceeds the applicable WQOs for this pollutant, demonstrating Reasonable Potential by Trigger 1.

(c) WQBELs. WQBELs for zinc, calculated according to SIP procedures with a CV of 0.5, are 430 µg/L AMEL and 790 µg/L MDEL.

(d) Feasibility of Compliance. It is feasible for the Discharger to comply with the zinc effluent limits because the effluent data show that the 95th percentile (80 µg/L) is less than the AMEL (430 µg/L); the 99th percentile (110 µg/L) is less than the MDEL (790 µg/L); and the mean (44 µg/L) is less than the long term average of the projected lognormal distribution of the effluent data set after accounting for effluent variability (290 µg/L). Attachment 2 to this Fact Sheet shows the probability distribution.

(e) Anti-backsliding. The previous permit contained interim performance-based limits, but did not contain final WQBELs for zinc, so anti-backsliding requirements are satisfied.

(4) Cyanide

(a) WQOs. The most stringent applicable WQOs for cyanide are from the Basin Plan for protection of fresh water aquatic life: 9.4 µg/L and 2.9 µg/L, acute and chronic criteria, respectively.

(b) RPA. This Order establishes effluent limitations for cyanide because the MEC of 9.0 µg/L exceeds the chronic WQO for this pollutant, demonstrating Reasonable Potential by Trigger 1.

(c) WQBELs. WQBELs for cyanide, calculated according to SIP procedures with a CV of 0.57, are 21 µg/L AMEL and 41 µg/L MDEL.

(d) Feasibility of Compliance. It is feasible for the Discharger to comply with the cyanide effluent limits because the effluent data show that the 95th percentile (7.5 µg/L) is less than the AMEL (21 µg/L); the 99th percentile (12 µg/L) is less than the MDEL (41 µg/L); and the mean (3.5 µg/L) is less than the long term average of the projected lognormal distribution of the effluent data set after accounting for effluent variability (14 µg/L). Attachment 2 to this Fact Sheet shows the probability distribution.

(e) Anti-backsliding. The cyanide limits are at least as stringent as the previous permit limits, so anti-backsliding requirements are satisfied.

e. Effluent Limit Calculations. Table F-11 shows the WQBEL calculations for copper, lead, zinc, and cyanide.

Table F-11. Effluent Limit Calculations

Pollutant	**Copper**	**Lead**	**Zinc**	**Cyanide**
Units	µg/L	µg/L	µg/L	µg/L
Basis	BP SSO	BP & CTR FW aq life	BP & CTR FW aq life	BP SSO
Criteria-Acute	9.4	86	95	9.4
Criteria-Chronic	6	3.3	86	2.9
Water Effects Ratio	1	1	1	1
Site Specific Translator - MDEL	0.66	---	---	---
Site Specific Translator - AMEL	0.38	---	---	---
Water Quality Objective-Acute	14.2	86	95	9.4
Water Quality Objective-Chronic	15.8	3.3	86	2.9
Dilution factor	9	9	9	9
No. of samples per month	4	4	4	4
Aquatic life criteria analysis required (Y/N)	Y	Y	Y	Y
HH criteria analysis required (Y/N)	N	N	N	Y
Background	9.9	2.3	18.2	0.5
ECA acute	53.6	689	786	89.5
ECA chronic	69.1	11.9	696	24.5
ECA HH				7000
Average effluent	21.5	2.23	43.7	3.52
Standard deviation	5.04	1.41	21.8	2.03
CV	0.23	0.63	0.50	0.58
ECA acute mult99	0.60	0.31	0.37	0.33
ECA chronic mult99	0.78	0.53	0.60	0.55
LTA acute	32.2	212	294	29.7
LTA chronic	54.2	6.24	417	13.6
Minimum LTA	32.2	6.24	294	13.6
AMEL mult95	1.20	1.58	1.45	1.53
MDEL mult99	1.67	3.24	2.68	3.02
AMEL (aq life)	38.7	9.87	427	20.8
MDEL (aq life)	53.7	20.25	786	40.9
MDEL/AMEL multiplier				1.97
AMEL (human health)				7000
MDEL (human health)				13800
Final limit – AMEL	**39**	**9.9**	**430**	**21**
Final limit – MDEL	**54**	**20**	**790**	**41**

5. Whole Effluent Acute Toxicity

This Order includes effluent limitations for whole effluent acute toxicity that are based on Basin Plan Table 4-3. The previous permit required acute toxicity tests using fathead minnow. Compliance evaluation is based on 96-hour static-renewal bioassays. All bioassays are to be performed according to the USEPA-approved method in 40 CFR Part 136, currently *Methods for Measuring the Acute Toxicity of Effluents and Receiving Water, 5th Edition.*

6. Whole Effluent Chronic Toxicity

Chronic toxicity monitoring was reduced from twice per year to once per five years because the Discharger has not violated any chronic toxicity requirements during the last permit cycle. Basin Plan section 4.5.5.3.2 lists the types of facilities that are required to monitor for chronic toxicity: all municipal facilities with approved pretreatment programs, all major industrial facilities, and selected groundwater dischargers. While none of these categories apply to the Discharger, chronic toxicity monitoring is required once per permit cycle to determine if there is reasonable potential for chronic toxicity for the next permit cycle.

E. Anti-backsliding and Antidegradation

1. **Effluent Limitations Retained from the Previous Permit**. Limitations for the following parameters are retained and are unchanged from the previous permit.

   - Residual Chlorine
   - pH
   - Temperature
   - Total Suspended Solids
   - Oil and Grease

   Retaining effluent limitations for these parameters ensures that existing receiving water quality will not be degraded and that anti-backsliding requirements are met.

2. **New Effluent Limitations**. This Order establishes WQBELs for the following parameters.

   - Copper
   - Lead
   - Zinc
   - Cyanide

These limits are new. The establishment of new effluent limitations effectively creates limitations more stringent than those in the previous permit, thereby meeting applicable anti-backsliding requirements and ensuring that the existing quality of the receiving water will not be degraded.

3. **More Stringent Effluent Limitations**. There are no parameters more stringent than the previous permit.

4. **Effluent Limitations Not Retained from the Previous Permit.** This Order does not retain limitations for the following parameters.

   - Settleable matter
   - Chronic toxicity
   - Nickel
   - Selenium
   - 4,4-DDE
   - Dieldrin
   - Mercury

   This Order does not retain effluent limitations for settleable matter. Historical monitoring does not show settleable matter concentrations above the limits in Basin Plan Table 4-2 [below 0.1 mL/L-hr (30-day average) and 0.2 mL/L-hr (daily maximum)], and total suspended solids requirements will ensure removal of settleable solids to equivalently low levels.

   Chronic toxicity monitoring is not required because historic monitoring has not shown chronic toxicity above effluent limits, and the nature of the discharge have not changed. The State Water Board is developing a chronic toxicity policy; therefore, this permit may be amended in the future to reflect the State policy once it becomes effective.

   This Order does not retain effluent limitations for nickel, selenium, 4,4-DDE, and dieldrin because the RPA did not show reasonable potential for these pollutants to violate WQOs. Elimination of WQBELs for these pollutants is consistent with State Water Board Order WQ-2001-16, and does not violate anti-backsliding policies.

   This Order does not retain effluent limitations for mercury because mercury is now regulated by Regional Water Board Order No. R2-2007-0077.

   Eliminating these effluent limits will not degrade receiving water quality because many other limits remain in place to ensure that the current performance will be maintained. Because the Discharger readily complied with these limits in the past, it did not modify its operations in any way to

comply with them; therefore, it will not modify its operations when these limits are eliminated. Because current performance will be maintained, existing water quality will also be maintained.

V. RATIONALE FOR RECEIVING WATER LIMITATIONS

Receiving water limitations are based on the Basin Plan's numeric and narrative objectives for surface water.

VI. RATIONALE FOR GROUNDWATER LIMITATIONS

Not applicable.

VII. RATIONALE FOR MONITORING AND REPORTING REQUIREMENTS

The principal purposes of a discharge monitoring program are to:

- document compliance with waste discharge requirements and prohibitions established by the Regional Water Board;
- facilitate self-policing by the discharger in the prevention and abatement of pollution arising from waste discharge;
- develop or assist in the development of limitations, discharge prohibitions, national standards of performance, pretreatment and toxicity standards, and other standards; and to
- prepare water and wastewater quality inventories.

The monitoring and reporting program (MRP) is a standard requirement in almost all NPDES permits issued by the Regional Water Board, including this Order. It contains definitions of terms, and sets out requirements for reporting of routine monitoring data in accordance with NPDES regulations, the CWC, and Regional Water Board policies. The MRP also defines the sampling stations and frequency, the pollutants to be monitored, and additional reporting requirements. Pollutants to be monitored include all parameters for which effluent limitations are specified. Monitoring for additional constituents, for which no effluent limitations are established, is also required to provide data for future completion of RPAs.

A. Influent Monitoring

There are no influent monitoring requirements. Since the source water is predominantly drinking water, information about influent water quality can be obtained from the supplier if needed.

B. Effluent Monitoring

The MRP retains all effluent monitoring requirements from the previous permit with the following exceptions. Monitoring for settleable matter and mercury are no

longer required because this Order does not retain the effluent limitations for these parameters. The monitoring frequencies for nickel, selenium, 4,4-DDE, and dieldrin have been reduced from monthly to once per five years, the same as other priority pollutants, because monitoring data indicate there is no reasonable potential for these pollutants to exceed WQOs. The monitoring frequency for chronic toxicity has been reduced from semi-annually to once per five years because monitoring data indicate there is no reasonable potential for chronic toxicity.

C. Receiving Water Monitoring

All receiving water monitoring requirements, except for unionized ammonia, have been retained from the previous order to ensure receiving waters are protected. Unionized ammonia was not retained because historical effluent data indicates that the discharge does not contain ammonia in detectable concentrations. Hardness monitoring was added for the development of future reasonable potential analyses and effluent limits.

VIII. RATIONALE FOR PROVISIONS

A. Standard Provisions (Provision VII.A)

Federal Standard Provisions, which in accordance with 40 CFR 122.41and 122.42 apply to all NPDES discharges and must be included in every NPDES permit, are provided in Attachments D of this Order.

Attachment G contains Regional Standard Provisions that supplement Attachment D. These standard provisions contain definitions of terms, specify general sampling and analytical protocols, and set forth consistent requirements for reporting spills, violations, and routine monitoring data in accordance with NPDES regulations, the CWC, and Regional Water Board policies.

B. Monitoring and Reporting Requirements (Provision VII.B)

The Discharger is required to monitor its effluent and the receiving water to evaluate compliance with permit conditions and to provide data for future RPAs. Monitoring requirements are contained in the MRP (Attachment E), Federal Standard Provisions (Attachment D) and Regional Standard Provisions (Attachment G).

C. Special Provisions (Provision VII.C)

1. Reopener Provisions

These provisions are based on 40 CFR 123 and allow modification of this Order and its effluent limitations as necessary in response to updated WQOs that may be established in the future.

2. Best Management Practices and Pollution Minimization Program

This provision is based on Basin Plan Chapter 4 and SIP section 2.4.5.

3. Copper Action Plan

This provision is based on Basin Plan section 7.2.2.2 and 7.2.2.5. It is necessary to ensure that reliance on copper site-specific objectives is consistent with antidegradation policies.

4. Cyanide Action Plan

This provision is based on Basin Plan Chapter 4 (see Regional Water Board Resolution No. R2-2006-0086 regarding Cyanide Site-Specific Objectives). It is necessary to ensure that reliance on cyanide site-specific objectives is consistent with antidegradation policies.

5. Dilution Study

This provision is based on the SIP section 1.4.2, which requires that dilution credits be based on the actual dilution achieved. The water quality-based effluent limits in this permit are calculated using a dilution credit of 10:1 (dilution factor of 9) that the Regional Water Board granted historically based on a study conducted by the Discharger many years ago. Unfortunately, neither the Discharger nor the Regional Water Board can locate a copy of this study to determine its adequacy in justifying dilution credits consistent with current policy in the State Implementation Policy. Therefore, the new study requirement is necessary to allow the Regional Water Board to consider continuing to grant dilution credits in the future. The study will also confirm whether the discharge continues to comply with Basin Plan Prohibition 1, which requires a minimum initial dilution of 10:1. If the study demonstrates less initial dilution than 10:1, the Regional Water Board may amend the order as allowed by law to reflect more accurate assumptions.

IX. PUBLIC PARTICIPATION

A. Notification of Interested Parties

The Regional Water Board has notified the Discharger and interested agencies and persons of its intent to prescribe waste discharge requirements for the discharge and has provided them with an opportunity to submit their written comments and recommendations. Notification was provided through the Contra Costa Times.

B. Written Comments

The staff determinations are tentative. Interested persons are invited to submit written comments concerning the tentative order. Comments must be submitted either in person or by mail to the Executive Office at the Regional Water Board at the address on the cover page of this Order, Attention: Vincent Christian.

To be fully responded to by staff and considered by the Regional Water Board, written comments must be received at the Regional Water Board offices by 5:00 p.m. on May 24, 2010**.**

C. Public Hearing

The Regional Water Board will hold a public hearing on the tentative WDRs during its regular Board meeting on the following date and time and at the following location:

Date:	July 14, 2010
Time:	9:00 am
Location:	Elihu Harris State Office Building 1515 Clay Street, 1st Floor Auditorium Oakland, CA 94612
Contact:	Vincent Christian, (510) 622-2336, email vchristian@waterboards.ca.gov.

Interested persons are invited to attend. At the public hearing, the Regional Water Board will hear testimony, if any, pertinent to the discharge and tentative WDRs. Oral testimony will be heard; however, for accuracy of the record, important testimony should be in writing.

Dates and venues may change. The Regional Water Board's web address is http://www.waterboards.ca.gov/sanfranciscobay, where one can access the current agenda for changes in dates and locations.

D. Waste Discharge Requirements Petitions

Any aggrieved person may petition the State Water Resources Control Board to review the decision of the Regional Water Board regarding the final Waste Discharge Requirements (WDRs). The petition must be submitted within 30 days of the Regional Water Board's action to the following address:

State Water Resources Control Board
Office of Chief Counsel
P.O. Box 100, 1001 I Street
Sacramento, CA 95812-0100

E. Information and Copying

The Report of Waste Discharge, related documents, tentative effluent limitations and special provisions, comments received, and other information are on file and may be inspected at the address above at any time between 8:45 a.m. and 5:00 p.m., except from noon to 1:00 p.m., Monday through Friday. Copying of documents may be arranged through the Regional Water Board by calling 510-622-2300.

F. Register of Interested Persons

Any person interested in being placed on the mailing list for information regarding the WDRs and NPDES permit should contact the Regional Water Board, reference GWF Power Systems, and provide a name, address, and phone number.

G. Additional Information

Requests for additional information or questions regarding this order should be directed to Vincent Christian at 510-622-2336 (e-mail at vchristian@waterboards.ca.gov).

Attachment 1 - Hardness Data from Sacramento River and San Joaquin River RMP Stations

Site Code	Collection Date	All Results	Adjusted results
BG30	02/09/1994	170.0	170.0
BG30	04/28/1994	150.0	150.0
BG30	08/24/1994	530	400.0
BG30	02/15/1995	64.0	64.0
BG30	04/18/1995	68.0	68.0
BG30	08/23/1995	76.0	76.0
BG30	02/14/1996	170.0	170.0
BG30	04/23/1996	96.0	96.0
BG30	07/22/1996	84.0	84.0
BG30	01/29/1997	43.4	43.4
BG30	04/23/1997	70.0	70.0
BG30	08/06/1997	110.0	110.0
BG30	02/04/1998	66.9	66.9
BG30	04/16/1998	67.2	67.2
BG30	07/29/1998	46.9	46.9
BG30	02/10/1999	58.5	58.5
BG30	04/21/1999	62.0	62.0
BG30	07/21/1999	101.0	101.0
BG30	02/09/2000	66.8	66.8
BG30	07/19/2000	108.0	108.0
BG30	02/14/2001	168.0	168.0
BG30	08/07/2001	246.0	246.0
BG30	07/30/2002	218.0	218.0
BG30	08/15/2003	75.3	75.3
BG30	07/23/2004	134.0	134.0
BG30	08/08/2005	134.0	134.0
BG30	08/24/2006	100.0	100.0
BG30	08/07/2007	340	340
BG30	07/09/2008	160.0	160.0

Site Code	Collection Date	All Results	Adjusted results
BG20	02/09/1994	96.0	96.0
BG20	04/28/1994	180.0	180.0
BG20	08/24/1994	420	400
BG20	02/15/1995	68	68
BG20	04/18/1995	56.0	56.0
BG20	08/23/1995	56.0	56.0
BG20	02/14/1996	210.0	210.0
BG20	04/23/1996	68.0	68.0
BG20	07/22/1996	84.0	84.0
BG20	01/29/1997	49.0	49.0
BG20	04/23/1997	74.0	74.0
BG20	08/06/1997	85.0	85.0
BG20	02/04/1998	47.2	47.2
BG20	04/16/1998	74.5	74.5
BG20	07/29/1998	47.9	47.9
BG20	02/10/1999	42.7	42.7
BG20	04/21/1999	67.4	67.4
BG20	07/21/1999	93.1	93.1
BG20	02/09/2000	62.2	62.2
BG20	07/19/2000	97.9	97.9
BG20	02/14/2001	185.5	185.5
BG20	08/07/2001	96.7	96.7
BG20	07/30/2002	394.5	394.5
BG20	08/15/2003	71.8	71.8
BG20	07/23/2004	267.0	267.0
BG20	2/28/2005	125.0	125.0
BG20	08/08/2005	66.0	66.0
BG20	08/24/2006	58.0	58.0
BG20	8/7/2007	400.0	400.0
BG20	7/9/2008	360.0	360.0
		GEOMEAN	**103.6706697**

Attachment 2 - Probability Plots for Nichols Road (Site V)

Copper

Lognormal distribution

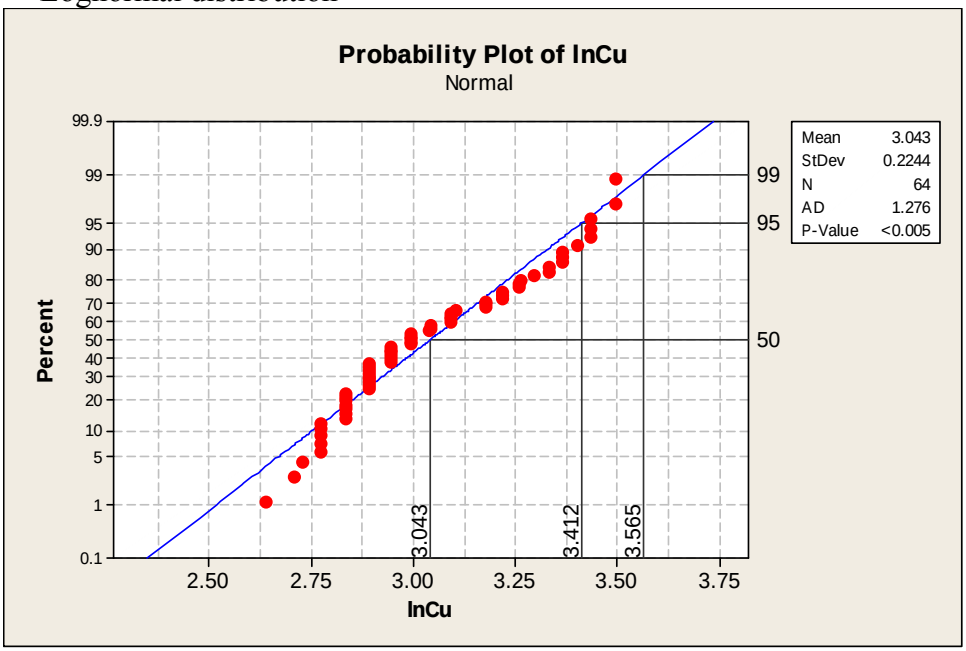

Zinc

Lognormal distribution

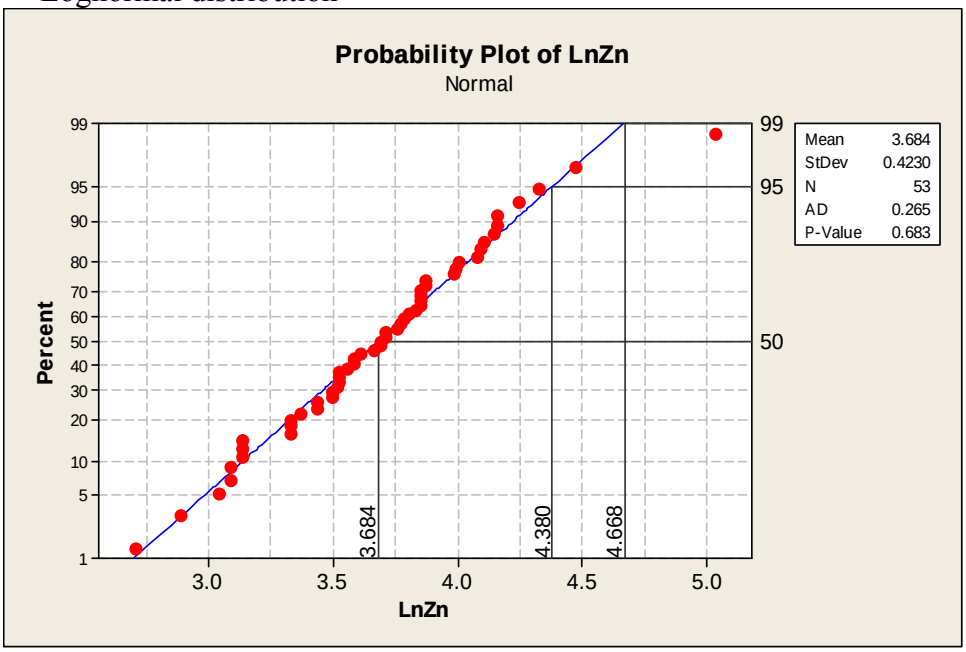

Lead

Lognormal distribution

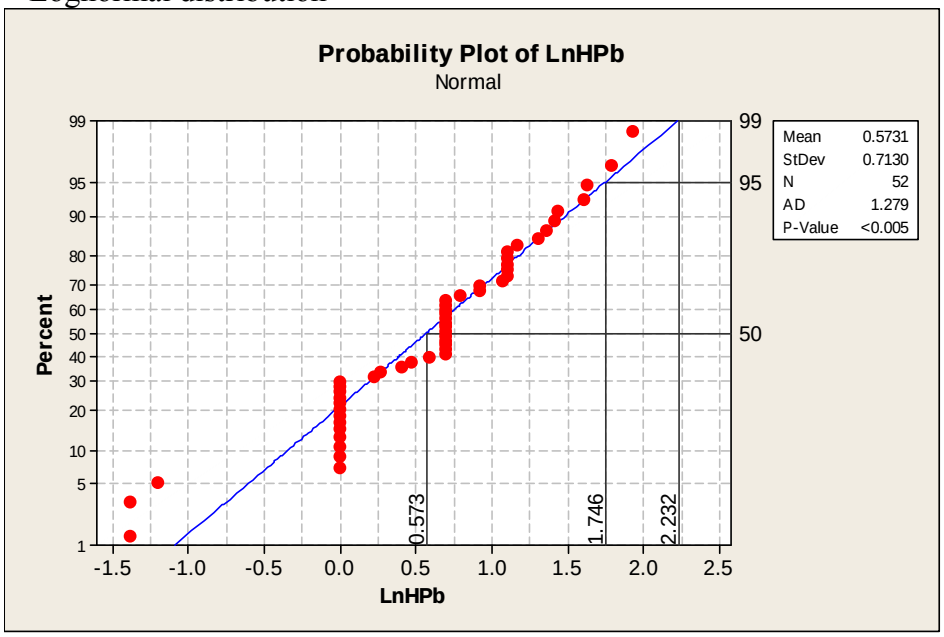

Cyanide

Lognormal distribution

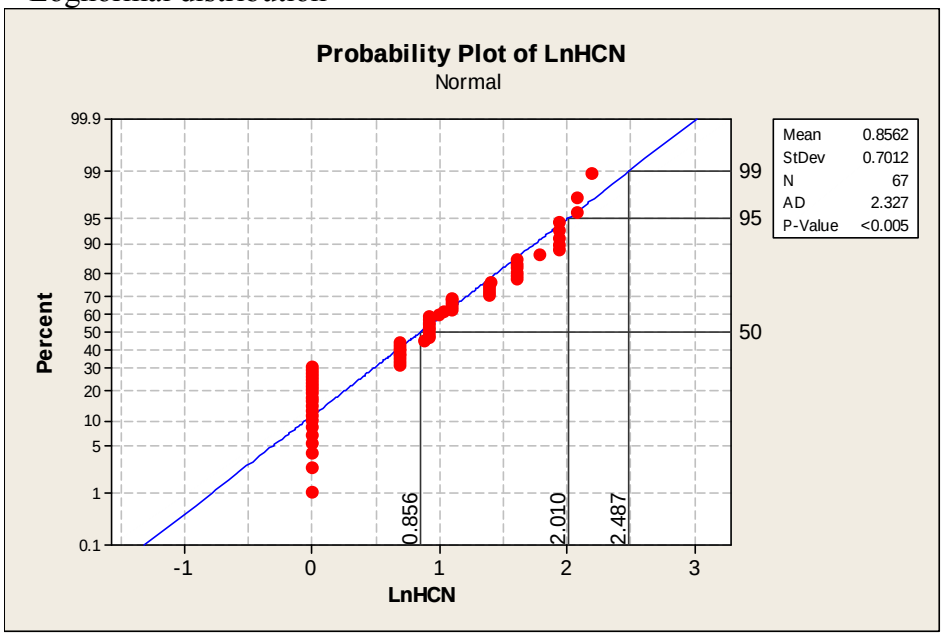

CALIFORNIA REGIONAL WATER QUALITY CONTROL BOARD
SAN FRANCISCO BAY REGION

ATTACHMENT G

REGIONAL STANDARD PROVISIONS, AND MONITORING AND REPORTING REQUIREMENTS
(SUPPLEMENT TO ATTACHMENT D)

For

NPDES WASTEWATER DISCHARGE PERMITS

March 2010

Table of Contents

I. STANDARD PROVISIONS - PERMIT COMPLIANCE G-1
- A. Duty to Comply G-1
- B. Need to Halt or Reduce Activity Not a Defense G-1
- C. Duty to Mitigate G-1
  - 1. Contingency Plan G-1
  - 2. Spill Prevention Plan G-2
- D. Proper Operation & Maintenance G-2
  - 1. Operation and Maintenance (O&M) Manual G-2
  - 2. Wastewater Facilities Status Report G-2
  - 3. Proper Supervision and Operation of Publicly Owned Treatment Works (POTWs) G-3
- E. Property Rights G-3
- F. Inspection and Entry G-3
- G. Bypass G-3
- H. Upset G-3
- I. Other G-3
- J. Storm Water G-3
  - 1. Storm Water Pollution Prevention Plan (SWPP Plan) G-3
  - 2. Source Identification G-4
  - 3. Storm Water Management Controls G-5
  - 4. Annual Verification of SWPP Plan G-6
- K. Biosolids Management G-6

II. STANDARD PROVISIONS – PERMIT ACTION G-7

III. STANDARD PROVISIONS – MONITORING G-7
- A. Sampling and Analyses G-7
  - 1. Use of Certified Laboratories G-7
  - 2. Use of Appropriate Minimum Levels G-7
  - 3. Frequency of Monitoring G-7
- B. Biosolids Monitoring G-10
  - 1. Biosolids Monitoring Frequency G-10
  - 2. Biosolids Pollutants to Monitor G-11
- C. Standard Observations G-11
  - 1. Receiving Water Observations G-11
  - 2. Wastewater Effluent Observations G-11
  - 3. Beach and Shoreline Observations G-12
  - 4. Land Retention or Disposal Area Observations G-12
  - 5. Periphery of Waste Treatment and/or Disposal Facilities Observations G-12

IV. STANDARD PROVISIONS – RECORDS G-12
- A. Records to be Maintained G-12
- B. Records of monitoring information shall include G-13
  - 1. Analytical Information G-13
  - 2. Flow Monitoring Data G-13
  - 3. Wastewater Treatment Process Solids G-13
  - 4. Disinfection Process G-13

5. Treatment Process Bypasses G-14
6. Treatment Facility Overflows G-14
V. STANDARD PROVISIONS – REPORTING G-14
A. Duty to Provide Information G-14
B. Signatory and Certification Requirements G-14
C. Monitoring Reports G-15
1. Self Monitoring Reports G-15
D. Compliance Schedules G-19
E. Twenty-Four Hour Reporting G-19
1. Spill of Oil or Other Hazardous Material Reports G-19
2. Unauthorized Discharges from Municipal Wastewater Treatment Plants G-20
F. Planned Changes G-23
G. Anticipated Noncompliance G-23
H. Other Noncompliance G-23
I. Other Information G-23
VI. STANDARD PROVISIONS – ENFORCEMENT G-23
VII. ADDITIONAL PROVISIONS – NOTIFICATION LEVELS G-23
VIII. DEFINITIONS – This section is an addition to Standard Provisions (Attachment D) G-23

CALIFORNIA REGIONAL WATER QUALITY CONTROL BOARD
SAN FRANCISCO BAY REGION

REGIONAL STANDARD PROVISIONS, AND MONITORING AND REPORTING REQUIREMENTS (SUPPLEMENT TO ATTACHMENT D)

FOR

NPDES WASTEWATER DISCHARGE PERMITS

APPLICABILITY

This document applies to dischargers covered by a National Pollutant Discharge Elimination System (NPDES) permit. This document does not apply to Municipal Separate Storm Sewer System (MS4) NPDES permits.

The purpose of this document is to supplement the requirements of Attachment D, Standard Provisions. The requirements in this supplemental document are designed to ensure permit compliance through preventative planning, monitoring, recordkeeping, and reporting. In addition, this document requires proper characterization of issues as they arise, and timely and full responses to problems encountered. To provide clarity on which sections of Attachment D this document supplements, this document is arranged in the same format as Attachment D.

I. STANDARD PROVISIONS - PERMIT COMPLIANCE

A. Duty to Comply – Not Supplemented

B. Need to Halt or Reduce Activity Not a Defense – Not Supplemented

C. Duty to Mitigate – This supplements I.C. of Standard Provisions (Attachment D)

1. **Contingency Plan -** The Discharger shall maintain a Contingency Plan as originally required by Regional Water Board Resolution 74-10 and as prudent in accordance with current municipal facility emergency planning. The Contingency Plan shall describe procedures to ensure that existing facilities remain in, or are rapidly returned to, operation in the event of a process failure or emergency incident, such as employee strike, strike by suppliers of chemicals or maintenance services, power outage, vandalism, earthquake, or fire. The Discharger may combine the Contingency Plan and Spill Prevention Plan into one document. Discharge in violation of the permit where the Discharger has failed to develop and implement a Contingency Plan as described below will be the basis for considering the discharge a willful and negligent violation of the permit pursuant to California Water Code Section 13387. The Contingency Plan shall, at a minimum, contain the provisions of a. through g. below.

    a. Provision of personnel for continued operation and maintenance of sewerage facilities during employee strikes or strikes against contractors providing services.

b. Maintenance of adequate chemicals or other supplies and spare parts necessary for continued operations of sewerage facilities.

c. Provisions of emergency standby power.

d. Protection against vandalism.

e. Expeditious action to repair failures of, or damage to, equipment and sewer lines.

f. Report of spills and discharges of untreated or inadequately treated wastes, including measures taken to clean up the effects of such discharges.

g. Programs for maintenance, replacement, and surveillance of physical condition of equipment, facilities, and sewer lines.

2. **Spill Prevention Plan -** The Discharger shall maintain a Spill Prevention Plan to prevent accidental discharges and minimize the effects of such events. The Spill Prevention Plan shall:

   a. Identify the possible sources of accidental discharge, untreated or partially treated waste bypass, and polluted drainage;

   b. Evaluate the effectiveness of present facilities and procedures, and state when they became operational; and

   c. Predict the effectiveness of the proposed facilities and procedures, and provide an implementation schedule containing interim and final dates when they will be constructed, implemented, or operational.

   This Regional Water Board, after review of the Contingency and Spill Prevention Plans or their updated revisions, may establish conditions it deems necessary to control accidental discharges and to minimize the effects of such events. Such conditions may be incorporated as part of the permit upon notice to the Discharger.

D. Proper Operation & Maintenance – This supplements I.D of Standard Provisions (Attachment D)

1. **Operation and Maintenance (O&M) Manual -** The Discharger shall maintain an O&M Manual to provide the plant and regulatory personnel with a source of information describing all equipment, recommended operational strategies, process control monitoring, and maintenance activities. To remain a useful and relevant document, the O&M Manual shall be kept updated to reflect significant changes in treatment facility equipment and operational practices. The O&M Manual shall be maintained in usable condition and be available for reference and use by all relevant personnel and Regional Water Board staff.

2. **Wastewater Facilities Status Report -** The Discharger shall regularly review, revise, or update, as necessary, its Wastewater Facilities Status Report. This report shall document how the Discharger operates and maintains its wastewater collection, treatment, and disposal facilities to ensure that all facilities are adequately staffed, supervised, financed, operated,

maintained, repaired, and upgraded as necessary to provide adequate and reliable transport, treatment, and disposal of all wastewater from both existing and planned future wastewater sources under the Discharger's service responsibilities.

3. **Proper Supervision and Operation of Publicly Owned Treatment Works (POTWs) -** POTWs shall be supervised and operated by persons possessing certificates of appropriate grade pursuant to Division 4, Chapter 14, Title 23 of the California Code of Regulations.

E. Property Rights – Not Supplemented

F. Inspection and Entry – Not Supplemented

G. Bypass – Not Supplemented

H. Upset – Not Supplemented

I. Other – This section is an addition to Standard Provisions (Attachment D)

1. Neither the treatment nor the discharge of pollutants shall create pollution, contamination, or nuisance as defined by California Water Code Section 13050.

2. Collection, treatment, storage, and disposal systems shall be operated in a manner that precludes public contact with wastewater, except in cases where excluding the public is infeasible, such as private property. If public contact with wastewater could reasonably occur on public property, warning signs shall be posted.

3. If the Discharger submits a timely and complete Report of Waste Discharge for permit reissuance, this permit continues in force and effect until a new permit is issued or the Regional Water Board rescinds the permit.

J. Storm Water – This section is an addition to Standard Provisions (Attachment D)

These provisions apply to facilities that do not direct all storm water flows from the facility to the wastewater treatment plant headworks.

1. **Storm Water Pollution Prevention Plan (SWPP Plan)**

   The SWPP Plan shall be designed in accordance with good engineering practices and shall address the following objectives:

   a. To identify pollutant sources that may affect the quality of storm water discharges; and

   b. To identify, assign, and implement control measures and management practices to reduce pollutants in storm water discharges.

   The SWPP Plan may be combined with the existing Spill Prevention Plan as required in accordance with Section C.2. The SWPP Plan shall be retained on-site and made available upon request of a representative of the Regional Water Board.

2. Source Identification

The SWPP Plan shall provide a description of potential sources that may be expected to add significant quantities of pollutants to storm water discharges, or may result in non-storm water discharges from the facility. The SWPP Plan shall include, at a minimum, the following items:

a. A topographical map (or other acceptable map if a topographical map is unavailable), extending one-quarter mile beyond the property boundaries of the facility, showing the wastewater treatment facility process areas, surface water bodies (including springs and wells), and discharge point(s) where the facility's storm water discharges to a municipal storm drain system or other points of discharge to waters of the State. The requirements of this paragraph may be included in the site map required under the following paragraph if appropriate.

b. A site map showing the following:

   1) Storm water conveyance, drainage, and discharge structures;

   2) An outline of the storm water drainage areas for each storm water discharge point;

   3) Paved areas and buildings;

   4) Areas of actual or potential pollutant contact with storm water or release to storm water, including but not limited to outdoor storage and process areas; material loading, unloading, and access areas; and waste treatment, storage, and disposal areas;

   5) Location of existing storm water structural control measures (i.e., berms, coverings, etc.);

   6) Surface water locations, including springs and wetlands; and

   7) Vehicle service areas.

c. A narrative description of the following:

   1) Wastewater treatment process activity areas;

   2) Materials, equipment, and vehicle management practices employed to minimize contact of significant materials of concern with storm water discharges;

   3) Material storage, loading, unloading, and access areas;

   4) Existing structural and non-structural control measures (if any) to reduce pollutants in storm water discharges; and

   5) Methods of on-site storage and disposal of significant materials.

d. A list of pollutants that have a reasonable potential to be present in storm water discharges in significant quantities.

3. Storm Water Management Controls

The SWPP Plan shall describe the storm water management controls appropriate for the facility and a time schedule for fully implementing such controls. The appropriateness and priorities of controls in the SWPP Plan shall reflect identified potential sources of pollutants. The description of storm water management controls to be implemented shall include, as appropriate:

a. Storm water pollution prevention personnel

Identify specific individuals (and job titles) that are responsible for developing, implementing, and reviewing the SWPP Plan.

b. Good housekeeping

Good housekeeping requires the maintenance of clean, orderly facility areas that discharge storm water. Material handling areas shall be inspected and cleaned to reduce the potential for pollutants to enter the storm drain conveyance system.

c. Spill prevention and response

Identify areas where significant materials can spill into or otherwise enter storm water conveyance systems and their accompanying drainage points. Specific material handling procedures, storage requirements, and cleanup equipment and procedures shall be identified, as appropriate. The necessary equipment to implement a cleanup shall be available, and personnel shall be trained in proper response, containment, and cleanup of spills. Internal reporting procedures for spills of significant materials shall be established.

d. Source control

Source controls include, for example, elimination or reduction of the use of toxic pollutants, covering of pollutant source areas, sweeping of paved areas, containment of potential pollutants, labeling of all storm drain inlets with “No Dumping” signs, isolation or separation of industrial and non-industrial pollutant sources so that runoff from these areas does not mix, etc.

e. Storm water management practices

Storm water management practices are practices other than those that control the sources of pollutants. Such practices include treatment or conveyance structures, such as drop inlets, channels, retention and detention basins, treatment vaults, infiltration galleries, filters, oil/water separators, etc. Based on assessment of the potential of various sources to contribute pollutants to storm water discharges in significant quantities, additional storm water management practices to remove pollutants from storm water discharges shall be implemented and design criteria shall be described.

f. Sediment and erosion control

Measures to minimize erosion around the storm water drainage and discharge points, such as riprap, revegetation, slope stabilization, etc., shall be described.

g. Employee training

Employee training programs shall inform all personnel responsible for implementing the SWPP Plan. Training shall address spill response, good housekeeping, and material management practices. New employee and refresher training schedules shall be identified.

h. Inspections

All inspections shall be done by trained personnel. Material handling areas shall be inspected for evidence of, or the potential for, pollutants entering storm water discharges. A tracking or follow up procedure shall be used to ensure appropriate response has been taken in response to an inspection. Inspections and maintenance activities shall be documented and recorded. Inspection records shall be retained for five years.

i. Records

A tracking and follow-up procedure shall be described to ensure that adequate response and corrective actions have been taken in response to inspections.

4. Annual Verification of SWPP Plan

An annual facility inspection shall be conducted to verify that all elements of the SWPP Plan are accurate and up-to-date. The results of this review shall be reported in the Annual Report to the Regional Water Board described in Section V.C.f.

K. Biosolids Management – This section is an addition to Standard Provisions (Attachment D)

Biosolids must meet the following requirements prior to land application. The Discharger must either demonstrate compliance or, if it sends the biosolids to another party for further treatment or distribution, must give the recipient the information necessary to ensure compliance.

1. Exceptional quality biosolids meet the pollutant concentration limits in Table III of 40 CFR Part 503.13, Class A pathogen limits, and one of the vector attraction reduction requirements in 503.33(b)(1)-(b)(8). Such biosolids do not have to be tracked further for compliance with general requirements (503.12) and management practices (503.14).

2. Biosolids used for agricultural land, forest, or reclamation shall meet the pollutant limits in Table I (ceiling concentrations) and Table II or Table III (cumulative loadings or pollutant concentration limits) of 503.13. They shall also meet the general requirements (503.12) and management practices (503.14) (if not exceptional quality biosolids) for Class A or Class B pathogen levels with associated access restrictions (503.32) and one of the 10 vector attraction reduction requirements in 503.33(b)(1)-(b)(10).

3. Biosolids used for lawn or home gardens must meet exceptional quality biosolids limits.

4. Biosolids sold or given away in a bag or other container must meet the pollutant limits in either Table III or Table IV (pollutant concentration limits or annual pollutant loading rate limits) of 503.13. If Table IV is used, a label or information sheet must be attached to the biosolids packing that explains Table IV (see 503.14). The biosolids must also meet the Class A pathogen limits and one of the vector attraction reduction requirements in 503.33(b)(1)-(b)(8).

II. STANDARD PROVISIONS – PERMIT ACTION – Not Supplemented

III. STANDARD PROVISIONS – MONITORING

A. Sampling and Analyses – This section is a supplement to III.A and III.B of Standard Provisions (Attachment D)

1. Use of Certified Laboratories

Water and waste analyses shall be performed by a laboratory certified for these analyses in accordance with California Water Code Section 13176.

2. Use of Appropriate Minimum Levels

Table C lists the suggested analytical methods for the 126 priority pollutants and other toxic pollutants that should be used, unless a particular method or minimum level (ML) is required in the MRP.

For priority pollutant monitoring, when there is more than one ML value for a given substance, the Discharger may select any one of the analytical methods cited in Table C for compliance determination, or any other method described in 40 CFR part 136 or approved by USEPA (such as the 1600 series) if authorized by the Regional Water Board. However, the ML must be below the effluent limitation and water quality objective. If no ML value is below the effluent limitation and water quality objective, then the method must achieve an ML no greater than the lowest ML value indicated in Table C. All monitoring instruments and equipment shall be properly calibrated and maintained to ensure accuracy of measurements.

3. Frequency of Monitoring

The minimum schedule of sampling analysis is specified in the MRP portion of the permit.

a. Timing of Sample Collection

1) The Discharger shall collect samples of influent on varying days selected at random and shall not include any plant recirculation or other sidestream wastes, unless otherwise stipulated by the MRP.

2) The Discharger shall collect samples of effluent on days coincident with influent sampling unless otherwise stipulated by the MRP or the Executive Officer. The Executive Officer may approve an alternative sampling plan if it is demonstrated to be representative of plant discharge flow and in compliance with all other permit requirements.

3) The Discharger shall collect grab samples of effluent during periods of day-time maximum peak effluent flows (or peak flows through secondary treatment units for facilities that recycle effluent flows).

4) Effluent sampling for conventional pollutants shall occur on at least one day of any multiple-day bioassay test the MRP requires. During the course of the test, on at least one day, the Discharger shall collect and retain samples of the discharge. In the event a bioassay test does not comply with permit limits, the Discharger shall analyze these retained samples for pollutants that could be toxic to aquatic life and for which it has effluent limits.

   i. The Discharger shall perform bioassay tests on final effluent samples; when chlorine is used for disinfection, bioassay tests shall be performed on effluent after chlorination-dechlorination; and

   ii. The Discharger shall analyze for total ammonia nitrogen and calculate the amount of un-ionized ammonia whenever test results fail to meet the percent survival specified in the permit.

b. Conditions Triggering Accelerated Monitoring

1) If the results from two consecutive samples of a constituent monitored in a 30-day period exceed the monthly average limit for any parameter (or if the required sampling frequency is once per month and the monthly sample exceeds the monthly average limit), the Discharger shall, within 24 hours after the results are received, increase its sampling frequency to daily until the results from the additional sampling show that the parameter is in compliance with the monthly average limit.

2) If any maximum daily limit is exceeded, the Discharger shall increase its sampling frequency to daily within 24 hours after the results are received that indicate the exceedance of the maximum daily limit until two samples collected on consecutive days show compliance with the maximum daily limit.

3) If final or intermediate results of an acute bioassay test indicate a violation or threatened violation (e.g., the percentage of surviving test organisms of any single acute bioassay test is less than 70 percent), the Discharger shall initiate a new test as soon as practical, and the Discharger shall investigate the cause of the mortalities and report its findings in the next self monitoring report (SMR).

4) The Discharger shall calibrate chlorine residual analyzers against grab samples as frequently as necessary to maintain accurate control and reliable operation. If an effluent violation is detected, the Discharger shall collect grab samples at least every 30 minutes until compliance with the limit is achieved, unless the Discharger monitors chlorine residual continuously. In such cases, the Discharger shall continue to conduct continuous monitoring as required by its permit.

5) When a bypass occurs (except one subject to provision III.A.3.b.6 below), the Discharger shall monitor flows and collect samples on a daily basis for all constituents at affected discharge points that have effluent limits for the duration of

the bypass (including acute toxicity using static renewals), except chronic toxicity, unless otherwise stipulated by the MRP.

6) Unless otherwise stipulated by the MRP, when a bypass approved pursuant to Attachment D, Standard Provisions, Sections I.G.2 or I.G.4, occurs, the Discharger shall monitor flows and, using appropriate procedures as specified in the MRP, collect and retain samples for affected discharge points on a daily basis for the duration of the bypass. The Discharger shall analyze for total suspended solids (TSS) using 24-hour composites (or more frequent increments) and for bacteria indicators with effluent limits using grab samples. If TSS exceeds 45 mg/L in any composite sample, the Discharger shall also analyze the retained samples for that discharge for all other constituents that have effluent limits, except oil and grease, mercury, dioxin-TEQ, and acute and chronic toxicity. Additionally, at least once each year, the Discharger shall analyze the retained samples for one approved bypass discharge event for all other constituents that have effluent limits, except oil and grease, mercury, dioxin-TEQ, and acute and chronic toxicity. This monitoring shall be in addition to the minimum monitoring specified in the MRP.

c. Storm Water Monitoring

The requirements of this section only apply to facilities that are not covered by an NPDES permit for storm water discharges and where not all site storm drainage from process areas (i.e., areas of the treatment facility where chemicals or wastewater could come in contact with storm water) is directed to the headworks. For storm water not directed to the headworks during the wet season (October 1 to April 30), the Discharger shall:

1) Conduct visual observations of the storm water discharge locations during daylight hours at least once per month during a storm event that produces significant storm water discharge to observe the presence of floating and suspended materials, oil and grease, discoloration, turbidity, and odor, etc.

2) Measure (or estimate) the total volume of storm water discharge, collect grab samples of storm water discharge from at least two storm events that produce significant storm water discharge, and analyze the samples for oil and grease, pH, TSS, and specific conductance.

   The grab samples shall be taken during the first 30 minutes of the discharge. If collection of the grab samples during the first 30 minutes is impracticable, grab samples may be taken during the first hour of the discharge, and the Discharger shall explain in the Annual Report why the grab sample(s) could not be taken in the first 30 minutes.

3) Testing for the presence of non-storm water discharges shall be conducted no less than twice during the dry season (May 1 to September 30) at all storm water discharge locations. Tests may include visual observations of flows, stains, sludges, odors, and other abnormal conditions; dye tests; TV line surveys; or analysis and validation of accurate piping schematics. Records shall be maintained describing the method used, date of testing, locations observed, and test results.

4) Samples shall be collected from all locations where storm water is discharged. Samples shall represent the quality and quantity of storm water discharged from the facility. If a facility discharges storm water at multiple locations, the Discharger may sample a reduced number of locations if it establishes and documents through the monitoring program that storm water discharges from different locations are substantially identical.

5) Records of all storm water monitoring information and copies of all reports required by the permit shall be retained for a period of at least three years from the date of sample, observation, or report.

d. Receiving Water Monitoring

The requirements of this section only apply when the MRP requires receiving water sampling.

1) Receiving water samples shall be collected on days coincident with effluent sampling for conventional pollutants.

2) Receiving water samples shall be collected at each station on each sampling day during the period within one hour following low slack water. Where sampling during lower slack water is impractical, sampling shall be performed during higher slack water. Samples shall be collected within the discharge plume and down current of the discharge point so as to be representative, unless otherwise stipulated in the MRP.

3) Samples shall be collected within one foot of the surface of the receiving water, unless otherwise stipulated in the MRP.

B. Biosolids Monitoring – This section supplements III.B of Standard Provisions (Attachment D)

When biosolids are sent to a landfill, sent to a surface disposal site, or applied to land as a soil amendment, they must be monitored as follows:

1. Biosolids Monitoring Frequency

Biosolids disposal must be monitored at the following frequency:

Metric tons biosolids/365 days	Frequency
0-290	Once per year
290-1500	Quarterly
1500-15,000	Six times per year
Over 15,000	Once per month

(Metric tons are on a dry weight basis)

2. **Biosolids Pollutants to Monitor**

Biosolids shall be monitored for the following constituents:

Land Application: arsenic, cadmium, copper, mercury, molybdenum, nickel, lead, selenium, and zinc

Municipal Landfill: Paint filter test (pursuant to 40 CFR 258)

Biosolids-only Landfill or Surface Disposal Site (if no liner and leachate system): arsenic, chromium, and nickel

C. Standard Observations – This section is an addition to III of Standard Provisions (Attachment D)

1. **Receiving Water Observations**

The requirements of this section only apply when the MRP requires standard observations of the receiving water. Standard observations shall include the following:

a. *Floating and suspended materials* (e.g., oil, grease, algae, and other macroscopic particulate matter): presence or absence, source, and size of affected area.

b. *Discoloration and turbidity*: description of color, source, and size of affected area.

c. *Odor*: presence or absence, characterization, source, distance of travel, and wind direction.

d. *Beneficial water use*: presence of water-associated waterfowl or wildlife, fisherpeople, and other recreational activities in the vicinity of each sampling station.

e. *Hydrographic condition*: time and height of corrected high and low tides (corrected to nearest National Oceanic and Atmospheric Administration location for the sampling date and time of sample collection).

f. *Weather conditions*:

1) Air temperature; and

2) Total precipitation during the five days prior to observation.

2. **Wastewater Effluent Observations**

The requirements of this section only apply when the MRP requires wastewater effluent standard observations. Standard observations shall include the following:

a. *Floating and suspended material of wastewater origin* (e.g., oil, grease, algae, and other macroscopic particulate matter): presence or absence.

b. *Odor*: presence or absence, characterization, source, distance of travel, and wind direction.

3. Beach and Shoreline Observations

The requirements of this section only apply when the MRP requires beach and shoreline standard observations. Standard observations shall include the following:

a. *Material of wastewater origin*: presence or absence, description of material, estimated size of affected area, and source.

b. *Beneficial use*: estimate number of people participating in recreational water contact, non-water contact, or fishing activities.

4. Land Retention or Disposal Area Observations

The requirements of this section only apply to facilities with on-site surface impoundments or disposal areas that are in use. This section applies to both liquid and solid wastes, whether confined or unconfined. The Discharger shall conduct the following for each impoundment:

a. Determine the amount of freeboard at the lowest point of dikes confining liquid wastes.

b. Report evidence of leaching liquid from area of confinement and estimated size of affected area. Show affected area on a sketch and volume of flow (e.g., gallons per minute [gpm]).

c. Regarding odor, describe presence or absence, characterization, source, distance of travel, and wind direction.

d. Estimate number of waterfowl and other water-associated birds in the disposal area and vicinity.

5. Periphery of Waste Treatment and/or Disposal Facilities Observations

The requirements of this section only apply when the MRP specifies periphery standard observations. Standard observations shall include the following:

a. *Odor*: presence or absence, characterization, source, and distance of travel.

b. *Weather conditions*: wind direction and estimated velocity.

IV. STANDARD PROVISIONS – RECORDS

A. Records to be Maintained – This supplements IV.A of Standard Provisions (Attachment D)

The Discharger shall maintain records in a manner and at a location (e.g., wastewater treatment plant or Discharger offices) such that the records are accessible to Regional Water Board staff. The minimum period of retention specified in Section IV, Records, of the Federal Standard Provisions shall be extended during the course of any unresolved litigation regarding the subject discharge, or when requested by the Regional Water Board or Regional Administrator of USEPA, Region IX.

A copy of the permit shall be maintained at the discharge facility and be available at all times to operating personnel.

B. Records of monitoring information shall include – This supplements IV.B of Standard Provision (Attachment D)

1. Analytical Information

Records shall include analytical method detection limits, minimum levels, reporting levels, and related quantification parameters.

2. Flow Monitoring Data

For all required flow monitoring (e.g., influent and effluent flows), the additional records shall include the following, unless otherwise stipulated by the MRP:

a. Total volume for each day; and

b. Maximum, minimum, and average daily flows for each calendar month.

3. Wastewater Treatment Process Solids

a. For each treatment unit process that involves solids removal from the wastewater stream, records shall include the following:

1) Total volume or mass of solids removed from each collection unit (e.g., grit, skimmings, undigested biosolids, or combination) for each calendar month or other time period as appropriate, but not to exceed annually; and

2) Final disposition of such solids (e.g., landfill, other subsequent treatment unit).

b. For final dewatered biosolids from the treatment plant as a whole, records shall include the following:

1) Total volume or mass of dewatered biosolids for each calendar month;

2) Solids content of the dewatered biosolids; and

3) Final disposition of dewatered biosolids (disposal location and disposal method).

4. Disinfection Process

For the disinfection process, these additional records shall be maintained documenting process operation and performance:

a. For bacteriological analyses:

1) Wastewater flow rate at the time of sample collection; and

2) Required statistical parameters for cumulative bacterial values (e.g., moving median or geometric mean for the number of samples or sampling period identified in this Order).

b. For the chlorination process, when chlorine is used for disinfection, at least daily average values for the following:

1) Chlorine residual of treated wastewater as it enters the contact basin (mg/L);

2) Chlorine dosage (kg/day); and

3) Dechlorination chemical dosage (kg/day).

5. Treatment Process Bypasses

A chronological log of all treatment process bypasses, including wet weather blending, shall include the following:

a. Identification of the treatment process bypassed;

b. Dates and times of bypass beginning and end;

c. Total bypass duration;

d. Estimated total bypass volume; and

e. Description of, or reference to other reports describing, the bypass event, the cause, the corrective actions taken (except for wet weather blending that is in compliance with permit conditions), and any additional monitoring conducted.

6. Treatment Facility Overflows

This section applies to records for overflows at the treatment facility. This includes the headworks and all units and appurtenances downstream. The Discharger shall retain a chronological log of overflows at the treatment facility and records supporting the information provided in section V.E.2.

C. Claims of Confidentiality – Not Supplemented

V. STANDARD PROVISIONS – REPORTING

A. Duty to Provide Information – Not Supplemented

B. Signatory and Certification Requirements – Not Supplemented

C. Monitoring Reports – This section supplements V.C of Standard Provisions (Attachment D)

1. Self Monitoring Reports

For each reporting period established in the MRP, the Discharger shall submit an SMR to the Regional Water Board in accordance with the requirements listed in this document and at the frequency the MRP specifies. The purpose of the SMR is to document treatment performance, effluent quality, and compliance with the waste discharge requirements of this Order.

a. Transmittal letter

Each SMR shall be submitted with a transmittal letter. This letter shall include the following:

1) Identification of all violations of effluent limits or other waste discharge requirements found during the reporting period;

2) Details regarding violations: parameters, magnitude, test results, frequency, and dates;

3) Causes of violations;

4) Discussion of corrective actions taken or planned to resolve violations and prevent recurrences, and dates or time schedule of action implementation (if previous reports have been submitted that address corrective actions, reference to the earlier reports is satisfactory);

5) Data invalidation (Data should not be submitted in an SMR if it does not meet quality assurance/quality control standards. However, if the Discharger wishes to invalidate any measurement after it was submitted in an SMR, a letter shall identify the measurement suspected to be invalid and state the Discharger's intent to submit, within 60 days, a formal request to invalidate the measurement. This request shall include the original measurement in question, the reason for invalidating the measurement, all relevant documentation that supports invalidation [e.g., laboratory sheet, log entry, test results, etc.], and discussion of the corrective actions taken or planned [with a time schedule for completion] to prevent recurrence of the sampling or measurement problem.);

6) If the Discharger blends, the letter shall describe the duration of blending events and certify whether blended effluent was in compliance with the conditions for blending; and

7) Signature (The transmittal letter shall be signed according to Section V.B of this Order, Attachment D – Standard Provisions.).

b. Compliance evaluation summary

Each report shall include a compliance evaluation summary. This summary shall include each parameter for which the permit specifies effluent limits, the number of

samples taken during the monitoring period, and the number of samples that exceed applicable effluent limits.

c. Results of analyses and observations

1) Tabulations of all required analyses and observations, including parameter, date, time, sample station, type of sample, test result, method detection limit, method minimum level, and method reporting level, if applicable, signed by the laboratory director or other responsible official.

2) When determining compliance with an average monthly effluent limitation and more than one sample result is available in a month, the Discharger shall compute the arithmetic mean unless the data set contains one or more reported determinations of detected but not quantified (DNQ) or nondetect (ND). In those cases, the Discharger shall compute the median in place of the arithmetic mean in accordance with the following procedure:

i. The data set shall be ranked from low to high, reported ND determinations lowest, DNQ determinations next, followed by quantified values (if any). The order of the individual ND or DNQ determinations is unimportant.

ii. The median value of the data set shall be determined. If the data set has an odd number of data points, then the median is the middle value. If the data set has an even number of data points, then the median is the average of the two values around the middle unless one or both of the points are ND or DNQ, in which case the median value shall be the lower of the two data points where DNQ is lower than a value and ND is lower than DNQ.

If a sample result, or the arithmetic mean or median of multiple sample results, is below the reporting limit, and there is evidence that the priority pollutant is present in the effluent above an effluent limitation and the Discharger conducts a Pollutant Minimization Program, the Discharger shall not be deemed out of compliance.

3) Dioxin-TEQ Reporting: The Discharger shall report for each dioxin and furan congener the analytical results of effluent monitoring, including the quantifiable limit (reporting level), the method detection limit, and the measured concentration. The Discharger shall report all measured values of individual congeners, including data qualifiers. When calculating dioxin-TEQ, the Discharger shall set congener concentrations below the minimum levels (ML) to zero. The Discharger shall calculate and report dioxin-TEQs using the following formula, where the MLs, toxicity equivalency factors (TEFs), and bioaccumulation equivalency factors (BEFs) are as provided in Table A:

$$\text{Dioxin-TEQ} = \Sigma\,(C_x \times TEF_x \times BEF_x)$$

where: C_x = measured or estimated concentration of congener *x*
TEF_x = toxicity equivalency factor for congener x
BEFx = bioaccumulation equivalency factor for congener *x*

Table A

Minimum Levels, Toxicity Equivalency Factors,
and Bioaccumulation Equivalency Factors

Dioxin or Furan Congener	Minimum Level (pg/L)	1998 Toxicity Equivalency Factor (TEF)	Bioaccumulation Equivalency Factor (BEF)
2,3,7,8-TCDD	10	1.0	1.0
1,2,3,7,8-PeCDD	50	1.0	0.9
1,2,3,4,7,8-HxCDD	50	0.1	0.3
1,2,3,6,7,8-HxCDD	50	0.1	0.1
1,2,3,7,8,9-HxCDD	50	0.1	0.1
1,2,3,4,6,7,8-HpCDD	50	0.01	0.05
OCDD	100	0.0001	0.01
2,3,7,8-TCDF	10	0.1	0.8
1,2,3,7,8-PeCDF	50	0.05	0.2
2,3,4,7,8-PeCDF	50	0.5	1.6
1,2,3,4,7,8-HxCDF	50	0.1	0.08
1,2,3,6,7,8-HxCDF	50	0.1	0.2
1,2,3,7,8,9-HxCDF	50	0.1	0.6
2,3,4,6,7,8-HxCDF	50	0.1	0.7
1,2,3,4,6,7,8-HpCDF	50	0.01	0.01
1,2,3,4,7,8,9-HpCDF	50	0.01	0.4
OCDF	100	0.0001	0.02

d. Data reporting for results not yet available

The Discharger shall make all reasonable efforts to obtain analytical data for required parameter sampling in a timely manner. Certain analyses require additional time to complete analytical processes and report results. For cases where required monitoring parameters require additional time to complete analytical processes and reports, and results are not available in time to be included in the SMR for the subject monitoring period, the Discharger shall describe such circumstances in the SMR and include the data for these parameters and relevant discussions of any observed exceedances in the next SMR due after the results are available.

e. Flow data

The Discharger shall provide flow data tabulation pursuant to Section IV.B.2.

f. Annual self monitoring report requirements

By the date specified in the MRP, the Discharger shall submit an annual report to the Regional Water Board covering the previous calendar year. The report shall contain the following:

1) Annual compliance summary table of treatment plant performance, including documentation of any blending events;

2) Comprehensive discussion of treatment plant performance and compliance with the permit (This discussion shall include any corrective actions taken or planned, such as changes to facility equipment or operation practices that may be needed to achieve compliance, and any other actions taken or planned that are intended to improve performance and reliability of the Discharger's wastewater collection, treatment, or disposal practices.);

3) Both tabular and graphical summaries of the monitoring data for the previous year if parameters are monitored at a frequency of monthly or greater;

4) List of approved analyses, including the following:

   (i) List of analyses for which the Discharger is certified;

   (ii) List of analyses performed for the Discharger by a separate certified laboratory (copies of reports signed by the laboratory director of that laboratory shall not be submitted but be retained onsite); and

   (iii) List of "waived" analyses, as approved;

5) Plan view drawing or map showing the Discharger's facility, flow routing, and sampling and observation station locations;

6) Results of annual facility inspection to verify that all elements of the SWPP Plan are accurate and up to date (only required if the Discharger does not route all storm water to the headworks of its wastewater treatment plant); and

7) Results of facility report reviews (The Discharger shall regularly review, revise, and update, as necessary, the O&M Manual, the Contingency Plan, the Spill Prevention Plan, and Wastewater Facilities Status Report so that these documents remain useful and relevant to current practices. At a minimum, reviews shall be conducted annually. The Discharger shall include, in each Annual Report, a description or summary of review and evaluation procedures, recommended or planned actions, and an estimated time schedule for implementing these actions. The Discharger shall complete changes to these documents to ensure they are up-to-date.).

g. Report submittal

The Discharger shall submit SMRs to:

California Regional Water Quality Control Board
San Francisco Bay Region
1515 Clay Street, Suite 1400
Oakland, CA 94612
Attn: NPDES Wastewater Division

h. Reporting data in electronic format

The Discharger has the option to submit all monitoring results in an electronic reporting format approved by the Executive Officer. If the Discharger chooses to submit SMRs electronically, the following shall apply:

1) *Reporting Method*: The Discharger shall submit SMRs electronically via a process approved by the Executive Officer (see, for example, the letter dated December 17, 1999, "Official Implementation of Electronic Reporting System [ERS]" and the progress report letter dated December 17, 2000).

2) *Monthly or Quarterly Reporting Requirements*: For each reporting period (monthly or quarterly as specified in the MRP), the Discharger shall submit an electronic SMR to the Regional Water Board in accordance with the provisions of Section V.C.1.a-e, except for requirements under Section V.C.1.c(1) where ERS does not have fields for dischargers to input certain information (e.g., sample time). However, until USEPA approves the electronic signature or other signature technologies, Dischargers that use ERS shall submit a hard copy of the original transmittal letter, an ERS printout of the data sheet, and a violation report (a receipt of the electronic transmittal shall be retained by the Discharger). This electronic SMR submittal suffices for the signed tabulations specified under Section V.C.1.c(1).

3) *Annual Reporting Requirements*: Dischargers who have submitted data using the ERS for at least one calendar year are exempt from submitting the portion of the annual report required under Section V.C.1.f(1) and (3).

D. Compliance Schedules – Not supplemented

E. Twenty-Four Hour Reporting – This section supplements V.E of Standard Provision (Attachment D)

1. Spill of Oil or Other Hazardous Material Reports

a. Within 24 hours of becoming aware of a spill of oil or other hazardous material that is not contained onsite and completely cleaned up, the Discharger shall report by telephone to the Regional Water Board at (510) 622-2369.

b. The Discharger shall also report such spills to the State Office of Emergency Services [telephone (800) 852-7550] only when the spills are in accordance with applicable reporting quantities for hazardous materials.

c. The Discharger shall submit a written report to the Regional Water Board within five working days following telephone notification unless directed otherwise by Regional Water Board staff. A report submitted electronically is acceptable. The written report shall include the following:

1) Date and time of spill, and duration if known;

2) Location of spill (street address or description of location);

3) Nature of material spilled;

4) Quantity of material involved;

5) Receiving water body affected, if any;

6) Cause of spill;

7) Estimated size of affected area;

8) Observed impacts to receiving waters (e.g., oil sheen, fish kill, water discoloration);

9) Corrective actions taken to contain, minimize, or clean up the spill;

10) Future corrective actions planned to be taken to prevent recurrence, and schedule of implementation; and

11) Persons or agencies notified.

2. Unauthorized Discharges from Municipal Wastewater Treatment Plants[1]

The following requirements apply to municipal wastewater treatment plants that experience an unauthorized discharge at their treatment facilities and are consistent with and supercede requirements imposed on the Discharger by the Executive Officer by letter of May 1, 2008, issued pursuant to California Water Code Section 13383.

a. Two (2)-Hour Notification

For any unauthorized discharges that result in a discharge to a drainage channel or a surface water, the Discharger shall, as soon as possible, but not later than two (2) hours after becoming aware of the discharge, notify the State Office of Emergency Services (telephone 800-852-7550), the local health officers or directors of environmental health with jurisdiction over the affected water bodies, and the Regional Water Board. The notification to the Regional Water Board shall be via the Regional Water Board's online reporting system at www.wbers.net, and shall include the following:

1) Incident description and cause;

2) Location of threatened or involved waterway(s) or storm drains;

3) Date and time the unauthorized discharge started;

4) Estimated quantity and duration of the unauthorized discharge (to the extent known), and the estimated amount recovered;

[1] California Code of Regulations, Title 23, Section 2250(b), defines an unauthorized discharge to be a discharge, not regulated by waste discharge requirements, of treated, partially treated, or untreated wastewater resulting from the intentional or unintentional diversion of wastewater from a collection, treatment or disposal system.

5) Level of treatment prior to discharge (e.g., raw wastewater, primary treated, undisinfected secondary treated, and so on); and

6) Identity of the person reporting the unauthorized discharge.

b. 24-hour Certification

Within 24 hours, the Discharger shall certify to the Regional Water Board, at www.wbers.net, that the State Office of Emergency Services and the local health officers or directors of environmental health with jurisdiction over the affected water bodies have been notified of the unauthorized discharge.

c. 5-Day Written Report

Within five business days, the Discharger shall submit a written report, via the Regional Water Board's online reporting system at www.wbers.net, that includes, in addition to the information required above, the following:

1) Methods used to delineate the geographical extent of the unauthorized discharge within receiving waters;

2) Efforts implemented to minimize public exposure to the unauthorized discharge;

3) Visual observations of the impacts (if any) noted in the receiving waters (e.g., fish kill, discoloration of water) and the extent of sampling if conducted;

4) Corrective measures taken to minimize the impact of the unauthorized discharge;

5) Measures to be taken to minimize the chances of a similar unauthorized discharge occurring in the future;

6) Summary of Spill Prevention Plan or O&M Manual modifications to be made, if necessary, to minimize the chances of future unauthorized discharges; and

7) Quantity and duration of the unauthorized discharge, and the amount recovered.

d. Communication Protocol

To clarify the multiple levels of notification, certification, and reporting, the current communication requirements for unauthorized discharges from municipal wastewater treatment plants are summarized in Table B that follows.

Table B

Summary of Communication Requirements for Unauthorized Discharges[1] from Municipal Wastewater Treatment Plants

Discharger is required to:	Agency Receiving Information	Time frame	Method for Contact
1. Notify	California Emergency Management Agency (Cal EMA)	As soon as possible, but not later than **2 hours** after becoming aware of the unauthorized discharge.	Telephone – (800) 852-7550 (obtain a control number from Cal EMA)
	Local health department	As soon as possible, but not later than **2 hours** after becoming aware of the unauthorized discharge.	Depends on local health department
	Regional Water Board	As soon as possible, but not later than **2 hours** after becoming aware of the unauthorized discharge.	Electronic[2] www.wbers.net
2. Certify	Regional Water Board	As soon as possible, but not later than **24 hours** after becoming aware of the unauthorized discharge.	Electronic[3] www.wbers.net
3. Report	Regional Water Board	Within **5 business days** of becoming aware of the unauthorized discharge.	Electronic[4] www.wbers.net

[1] California Code of Regulations, Title 23, Section 2250(b), defines an unauthorized discharge to be a discharge, not regulated by waste discharge requirements, of treated, partially treated, or untreated wastewater resulting from the intentional or unintentional diversion of wastewater from a collection, treatment or disposal system.

[2] In the event that the Discharger is unable to provide online notification within 2 hours of becoming aware of an unauthorized discharge, it shall phone the Regional Water Board's spill hotline at (510) 622-2369 and convey the same information contained in the notification form. In addition, within 3 business days of becoming aware of the unauthorized discharge, the Discharger shall enter the notification information into the Regional Water Board's online system in electronic format.

[3] In most instances, the 2-hour notification will also satisfy 24-hour certification requirements. This is because the notification form includes fields for documenting that OES and the local health department have been contacted. In other words, if the Discharger is able to complete all the fields in the notification form within 2 hours, certification requirements are also satisfied. In the event that the Discharger is unable to provide online certification within 24 hours of becoming aware of an unauthorized discharge, it shall phone the Regional Water Board's spill hotline at (510) 622-2369 and convey the same information contained in the certification form. In addition, within 3 business days of becoming aware of the unauthorized discharge, the Discharger shall enter the certification information into the Regional Water Board's online system in electronic format.

[4] If the Discharger cannot satisfy the 5-day reporting requirements via the Regional Water Board's online reporting system, it shall submit a written report (preferably electronically in pdf) to the appropriate Regional Water Board case manager. In cases where the Discharger cannot satisfy the 5-day reporting requirements via the online reporting system, it must still complete the Regional Water Board's online reporting requirements within 15 calendar days of becoming aware of the unauthorized discharge.

F. Planned Changes – Not supplemented

G. Anticipated Noncompliance – Not supplemented

H. Other Noncompliance – Not supplemented

I. Other Information – Not supplemented

VI. STANDARD PROVISIONS – ENFORCEMENT – Not Supplemented

VII. ADDITIONAL PROVISIONS – NOTIFICATION LEVELS – Not Supplemented

VIII. DEFINITIONS – This section is an addition to Standard Provisions (Attachment D)

More definitions can be found in Attachment A of this NPDES Permit.

1. Arithmetic Calculations

   a. Geometric mean is the antilog of the log mean or the back-transformed mean of the logarithmically transformed variables, which is equivalent to the multiplication of the antilogarithms. The geometric mean can be calculated with either of the following equations:

   $$\text{Geometric Mean} = Anti\log\left(\frac{1}{N}\sum_{i=1}^{N} Log(C_i)\right)$$

   or

   $$\text{Geometric Mean} = (C_1 * C_2 * \ldots * C_N)^{1/N}$$

   Where "N" is the number of data points for the period analyzed and "C" is the concentration for each of the "N" data points.

   b. Mass emission rate is obtained from the following calculation for any calendar day:

   $$\text{Mass emission rate (lb/day)} = \frac{8.345}{N}\sum_{i=1}^{N} Q_i C_i$$

   $$\text{Mass emission rate (kg/day)} = \frac{3.785}{N}\sum_{i=1}^{N} Q_i C_i$$

   In which "N" is the number of samples analyzed in any calendar day and "Q_i" and "C_i" are the flow rate (MGD) and the constituent concentration (mg/L) associated with each of the "N" grab samples that may be taken in any calendar day. If a composite sample is taken, "C_i" is the concentration measured in the composite sample and "Q_i" is the average flow rate occurring during the period over which the samples are composited. The daily concentration of a constituent measured over any calendar day shall be determined from the flow-weighted average of the same constituent in the combined waste streams as follows:

C_d = Average daily concentration = $\frac{1}{Q_t}\sum_{i=1}^{N} Q_i C_i$

In which "N" is the number of component waste streams and "Q" and "C" are the flow rate (MGD) and the constituent concentration (mg/L) associated with each of the "N" waste streams. "Q_t" is the total flow rate of the combined waste streams.

c. Maximum allowable mass emission rate, whether for a 24-hour, weekly 7-day, monthly 30-day, or 6-month period, is a limitation expressed as a daily rate determined with the formulas in the paragraph above, using the effluent concentration limit specified in the permit for the period and the specified allowable flow.

d. POTW removal efficiency is the ratio of pollutants removed by the treatment facilities to pollutants entering the treatment facilities (expressed as a percentage). The Discharger shall determine removal efficiencies using monthly averages (by calendar month unless otherwise specified) of pollutant concentration of influent and effluent samples collected at about the same time and using the following equation (or its equivalent):

Removal Efficiency (%) = 100 × [1-(Effluent Concentration/Influent Concentration)]

2. Biosolids means the solids, semi-liquid suspensions of solids, residues, screenings, grit, scum, and precipitates separated from or created in wastewater by the unit processes of a treatment system. It also includes, but is not limited to, all supernatant, filtrate, centrate, decantate, and thickener overflow and underflow in the solids handling parts of the wastewater treatment system.

3. Blending is the practice of recombining wastewater that has been biologically treated with wastewater that has bypassed around biological treatment units.

4. Bottom sediment sample is (1) a separate grab sample taken at each sampling station for the determination of selected physical-chemical parameters, or (2) four grab samples collected from different locations in the immediate vicinity of a sampling station while the boat is anchored and analyzed separately for macroinvertebrates.

5. Composite sample is a sample composed of individual grab samples collected manually or by an automatic sampling device on the basis of time or flow as specified in the MRP. For flow-based composites, the proportion of each grab sample included in the composite sample shall be within plus or minus five percent (+/-5%) of the representative flow rate of the waste stream being measured at the time of grab sample collection. Alternatively, equal volume grab samples may be individually analyzed with the flow-weighted average calculated by averaging flow-weighted ratios of each grab sample analytical result. Grab samples comprising time-based composite samples shall be collected at intervals not greater than those specified in the MRP. The quantity of each grab sample comprising a time-based composite sample shall be a set of flow proportional volumes as specified in the MRP. If a particular time-based or flow-based composite sampling protocol is not specified in the MRP, the Discharger shall determine and implement the most representative sampling protocol for the given parameter subject to Executive Officer approval.

6. Depth-integrated sample is defined as a water or waste sample collected by allowing a sampling device to fill during a vertical traverse in the waste or receiving water body being sampled. The

Discharger shall collect depth-integrated samples in such a manner that the collected sample will be representative of the waste or water body at that sampling point.

7. Flow sample is an accurate measurement of the average daily flow volume using a properly calibrated and maintained flow measuring device.

8. Grab sample is an individual sample collected in a short period of time not exceeding 15 minutes. Grab samples represent only the condition that exists at the time the wastewater is collected.

9. Initial dilution is the process that results in the rapid and irreversible turbulent mixing of wastewater with receiving water around the point of discharge.

10. Overflow is the intentional or unintentional spilling or forcing out of untreated or partially treated wastes from a transport system (e.g., through manholes, at pump stations, and at collection points) upstream from the treatment plant headworks or from any part of a treatment plant facility.

11. Priority pollutants are those constituents referred to in 40 CFR Part 122 as promulgated in the Federal Register, Vol. 65, No. 97, Thursday, May 18, 2000, also known as the California Toxics Rule, the presence or discharge of which could reasonably be expected to interfere with maintaining designated uses.

12. Storm water means storm water runoff, snow melt runoff, and surface runoff and drainage. It excludes infiltration and runoff from agricultural land.

13. Toxic pollutant means any pollutant listed as toxic under federal Clean Water Act section 307(a)(1) or under 40 CFR 401.15.

14. Untreated waste is raw wastewater.

15. Waste, waste discharge, discharge of waste, and discharge are used interchangeably in the permit. The requirements of the permit apply to the entire volume of water, and the material therein, that is disposed of to surface and ground waters of the State of California.

Table C

List of Monitoring Parameters and Analytical Methods

CTR No.	Pollutant/Parameter	Analytical Method[1]	Minimum Levels[2] (µg/l)											
			GC	GCMS	LC	Color	FAA	GFAA	ICP	ICP MS	SPGFAA	HYD RIDE	CVAA	DCP
1.	Antimony	204.2					10	5	50	0.5	5	0.5		1000
2.	Arsenic	206.3				20		2	10	2	2	1		1000
3.	Beryllium						20	0.5	2	0.5	1			1000
4.	Cadmium	200 or 213				10	0.5	10	0.25	0.5				1000
5a.	Chromium (III)	SM 3500												
5b.	Chromium (VI)	SM 3500				10	5							1000
6.	Copper	200.9					25	5	10	0.5	2			1000
7.	Lead	200.9					20	5	5	0.5	2			10,000
8.	Mercury	1631 (note)[3]												
9.	Nickel	249.2					50	5	20	1	5			1000
10.	Selenium	200.8 or SM 3114B or C						5	10	2	5	1		1000
11.	Silver	272.2					10	1	10	0.25	2			1000
12.	Thallium	279.2					10	2	10	1	5			1000
13.	Zinc	200 or 289					20		20	1	10			
14.	Cyanide	SM 4500 CN^- C or I				5								
15.	Asbestos (only required for dischargers to MUN waters)[4]	0100.2 [5]												
16.	2,3,7,8-TCDD and 17 congeners (Dioxin)	1613												
17.	Acrolein	603	2.0	5										
18.	Acrylonitrile	603	2.0	2										
19.	Benzene	602	0.5	2										
33.	Ethylbenzene	602	0.5	2										
39.	Toluene	602	0.5	2										

[1] The suggested method is the USEPA Method unless otherwise specified (SM = Standard Methods). The Discharger may use another USEPA-approved or recognized method if that method has a level of quantification below the applicable water quality objective. Where no method is suggested, the Discharger has the discretion to use any standard method.

[2] Minimum levels are from the *State Implementation Policy*. They are the concentration of the lowest calibration standard for that technique based on a survey of contract laboratories. Laboratory techniques are defined as follows: GC = Gas Chromatography; GCMS = Gas Chromatography/Mass Spectrometry; LC = High Pressure Liquid Chromatography; Color = Colorimetric; FAA = Flame Atomic Absorption; GFAA = Graphite Furnace Atomic Absorption; ICP = Inductively Coupled Plasma; ICPMS = Inductively Coupled Plasma/Mass Spectrometry; SPGFAA = Stabilized Platform Graphite Furnace Atomic Absorption (i.e., USEPA 200.9); Hydride = Gaseous Hydride Atomic Absorption; CVAA = Cold Vapor Atomic Absorption; DCP = Direct Current Plasma.

[3] The Discharger shall use ultra-clean sampling (USEPA Method 1669) and ultra-clean analytical methods (USEPA Method 1631) for mercury monitoring. The minimum level for mercury is 2 ng/l (or 0.002 ug/l).

[4] MUN = Municipal and Domestic Supply. This designation, if applicable, is in the Findings of the permit.

[5] *Determination of Asbestos Structures over 10 [micrometers] in Length in Drinking Water Using MCE Filters*, USEPA 600/R-94-134, June 1994.

CTR No.	Pollutant/Parameter	Analytical Method[1]	Minimum Levels[2] (µg/l)											
			GC	GCMS	LC	Color	FAA	GFAA	ICP	ICP MS	SPGFAA	HYD RIDE	CVAA	DCP
20.	Bromoform	601	0.5	2										
21.	Carbon Tetrachloride	601	0.5	2										
22.	Chlorobenzene	601	0.5	2										
23.	Chlorodibromomethane	601	0.5	2										
24.	Chloroethane	601	0.5	2										
25.	2-Chloroethylvinyl Ether	601	1	1										
26.	Chloroform	601	0.5	2										
75.	1,2-Dichlorobenzene	601	0.5	2										
76.	1,3-Dichlorobenzene	601	0.5	2										
77.	1,4-Dichlorobenzene	601	0.5	2										
27.	Dichlorobromomethane	601	0.5	2										
28.	1,1-Dichloroethane	601	0.5	1										
29.	1,2-Dichloroethane	601	0.5	2										
30.	1,1-Dichloroethylene or 1,1-Dichloroethene	601	0.5	2										
31.	1,2-Dichloropropane	601	0.5	1										
32.	1,3-Dichloropropylene or 1,3-Dichloropropene	601	0.5	2										
34.	Methyl Bromide or Bromomethane	601	1.0	2										
35.	Methyl Chloride or Chloromethane	601	0.5	2										
36.	Methylene Chloride or Dichlorormethane	601	0.5	2										
37.	1,1,2,2-Tetrachloroethane	601	0.5	1										
38.	Tetrachloroethylene	601	0.5	2										
40.	1,2-Trans-Dichloroethylene	601	0.5	1										
41.	1,1,1-Trichloroethane	601	0.5	2										
42.	1,1,2-Trichloroethane	601	0.5	2										
43.	Trichloroethene	601	0.5	2										
44.	Vinyl Chloride	601	0.5	2										
45.	2-Chlorophenol	604	2	5										
46.	2,4-Dichlorophenol	604	1	5										
47.	2,4-Dimethylphenol	604	1	2										
48.	2-Methyl-4,6-Dinitrophenol or Dinitro-2-methylphenol	604	10	5										
49.	2,4-Dinitrophenol	604	5	5										
50.	2-Nitrophenol	604		10										
51.	4-Nitrophenol	604	5	10										
52.	3-Methyl-4-Chlorophenol	604	5	1										
53.	Pentachlorophenol	604	1	5										
54.	Phenol	604	1	1		50								
55.	2,4,6-Trichlorophenol	604	10	10										
56.	Acenaphthene	610 HPLC	1	1	0.5									
57.	Acenaphthylene	610 HPLC		10	0.2									
58.	Anthracene	610 HPLC		10	2									
60.	Benzo(a)Anthracene or 1,2 Benzanthracene	610 HPLC	10	5										
61.	Benzo(a)Pyrene	610 HPLC		10	2									
62.	Benzo(b)Fluoranthene or 3,4 Benzofluoranthene	610 HPLC		10	10									
63.	Benzo(ghi)Perylene	610 HPLC		5	0.1									

CTR No.	Pollutant/Parameter	Analytical Method[1]	Minimum Levels[2] (µg/l)											
			GC	GCMS	LC	Color	FAA	GFAA	ICP	ICP MS	SPGFAA	HYD RIDE	CVAA	DCP
64.	Benzo(k)Fluoranthene	610 HPLC		10	2									
74.	Dibenzo(a,h)Anthracene	610 HPLC		10	0.1									
86.	Fluoranthene	610 HPLC	10	1	0.05									
87.	Fluorene	610 HPLC		10	0.1									
92.	Indeno(1,2,3-cd) Pyrene	610 HPLC		10	0.05									
100.	Pyrene	610 HPLC		10	0.05									
68.	Bis(2-Ethylhexyl)Phthalate	606 or 625	10	5										
70.	Butylbenzyl Phthalate	606 or 625	10	10										
79.	Diethyl Phthalate	606 or 625	10	2										
80.	Dimethyl Phthalate	606 or 625	10	2										
81.	Di-n-Butyl Phthalate	606 or 625		10										
84.	Di-n-Octyl Phthalate	606 or 625		10										
59.	Benzidine	625		5										
65.	Bis(2-Chloroethoxy)Methane	625		5										
66.	Bis(2-Chloroethyl)Ether	625	10	1										
67.	Bis(2-Chloroisopropyl)Ether	625	10	2										
69.	4-Bromophenyl Phenyl Ether	625	10	5										
71.	2-Chloronaphthalene	625		10										
72.	4-Chlorophenyl Phenyl Ether	625		5										
73.	Chrysene	625		10	5									
78.	3,3'-Dichlorobenzidine	625		5										
82.	2,4-Dinitrotoluene	625	10	5										
83.	2,6-Dinitrotoluene	625		5										
85.	1,2-Diphenylhydrazine (note)[6]	625		1										
88.	Hexachlorobenzene	625	5	1										
89.	Hexachlorobutadiene	625	5	1										
90.	Hexachlorocyclopentadiene	625	5	5										
91.	Hexachloroethane	625	5	1										
93.	Isophorone	625	10	1										
94.	Naphthalene	625	10	1	0.2									
95.	Nitrobenzene	625	10	1										
96.	N-Nitrosodimethylamine	625	10	5										
97.	N-Nitrosodi-n-Propylamine	625	10	5										
98.	N-Nitrosodiphenylamine	625	10	1										
99.	Phenanthrene	625		5	0.05									
101.	1,2,4-Trichlorobenzene	625	1	5										
102.	Aldrin	608	0.005											
103.	α-BHC	608	0.01											
104.	β-BHC	608	0.005											
105.	γ-BHC (Lindane)	608	0.02											
106.	δ-BHC	608	0.005											
107.	Chlordane	608	0.1											
108.	4,4'-DDT	608	0.01											
109.	4,4'-DDE	608	0.05											
110.	4,4'-DDD	608	0.05											

[6] Measurement for 1,2-Diphenylhydrazine may use azobenzene as a screen: if azobenzene is measured at >1 ug/l, then the Discharger shall analyze for 1,2-Diphenylhydrazine.

CTR No.	Pollutant/Parameter	Analytical Method[1]	Minimum Levels[2] (µg/l)											
			GC	GCMS	LC	Color	FAA	GFAA	ICP	ICP MS	SPGFAA	HYD RIDE	CVAA	DCP
111.	Dieldrin	608	0.01											
112.	Endosulfan (alpha)	608	0.02											
113.	Endosulfan (beta)	608	0.01											
114.	Endosulfan Sulfate	608	0.05											
115.	Endrin	608	0.01											
116.	Endrin Aldehyde	608	0.01											
117.	Heptachlor	608	0.01											
118.	Heptachlor Epoxide	608	0.01											
119-125	PCBs: Aroclors 1016, 1221, 1232, 1242, 1248, 1254, 1260	608	0.5											
126.	Toxaphene	608	0.5											