Linda S. Adams
Acting Secretary for Environmental Protection

California Regional Water Quality Control Board

San Francisco Bay Region

Edmund G. Brown, Jr.
Governor

1515 Clay Street, Suite 1400, Oakland CA 94612
(510) 622-2300 • Fax (510) 622-2460
http://www.waterboards.ca.gov/sanfranciscobay

ORDER NO. R2-2011-0027
NPDES NO. CA0005053

The following Discharger is subject to waste discharge requirements as set forth in this Order.

Table 1. Discharger Information

Discharger	**ConocoPhillips Company**
Name of Facility	San Francisco Refinery at Rodeo
Facility Address	1380 San Pablo Avenue
	Rodeo, CA 94572
	Contra Costa County
The United States Environmental Protection Agency (USEPA) and the Regional Water Quality Control Board have classified this discharge as a major discharge.	

Discharges by ConocoPhillips from the discharge points identified below are subject to waste discharge requirements as set forth in this Order.

Table 2. Discharge Location

Discharge Point	Effluent Description	Discharge Point Latitude	Discharge Point Longitude	Receiving Water
002	Treated refinery wastewater	38º 03’ 22” N	122º 15’ 36” W	San Pablo Bay
003	Non-contact once-through cooling water, demineralizer regeneration wastewater, stormwater, and runoff from sections of Interstate-80 and San Pablo Avenue.	38º 02’ 41” N	122º 15’ 41” W	San Pablo Bay
004	Stormwater and run-off from the marine terminal and marine terminal causeway.	38º 03’ 22” N	122º 15’ 36” W	San Pablo Bay

Table 3. Administrative Information

This Order was adopted by the Regional Water Board on:	**May 11, 2011**
This Order shall become effective on:	**July 1, 2011**
This Order shall expire on:	**June 30, 2016**
The Discharger shall file a Report of Waste Discharge in accordance with Title 23, California Code of Regulations, as application for issuance of new waste discharge requirements no later than:	**180 days prior to the Order expiration date**

I, Bruce H. Wolfe, Executive Officer, do hereby certify that this Order with all attachments is a full, true, and correct copy of an Order adopted by the California Regional Water Quality Control Board, San Francisco Bay Region, on the date shown above.

Digitally signed by Bruce Wolfe
Date: 2011.05.13 15:37:47 -07'00'

Bruce H. Wolfe, Executive Officer

Table of Contents

I. Facility Information 5
II. Findings 5
III. Discharge Prohibitions 11
IV. Effluent Limitations and Discharge Specifications 12
A. Effluent Limitations – Discharge Point 002 12
1. Technology-Based Effluent Limitations 12
2. Effluent Limitations for Toxic Substances 13
3. Mass Emission Limitation for Selenium 14
4. Bacteria 14
5. Acute Toxicity 15
6. Chronic Toxicity 15
7. Effluent Limit Adjustments for Recycled Water Use 16
B. Effluent Limitations – Discharge Point 003 18
C. Effluent Limitations – Discharge Point 004 20
V. Receiving Water Limitations 20
VI. Provisions 21
A. Standard Provisions 21
B. Monitoring and Reporting Program (MRP) Requirements 22
C. Special Provisions 22
1. Reopener Provisions 22
2. Special Studies and Additional Monitoring 22
3. Best Management Practices and Pollution Minimization 26
4. Other Special Provisions 29
VII. Compliance Determination 32

Tables

Table 1. Discharger Information 1
Table 2. Discharge Location 1
Table 3. Administrative Information 1
Table 4. Facility Information 5
Table 5. Beneficial Uses of Receiving Waters 8
Table 6a. Technology-Based Effluent Limitations at Discharge Point 002 12
Table 6b. Additional Contaminated Runoff Effluent Limitation Allocations 12
Table 6c. Additional Ballast Water Effluent Limitation Allocations 13
Table 7. Effluent Limitations for Toxic Substances at Discharge Point 002 13
Table 8. Technology-Based Effluent Limitations at Discharge Point 003 18
Table 9. Effluent Limitations for Toxic Substances at Discharge Point 003 19
Table 10. 99th Percentile Differences Between Influent and Effluent Concentrations at Discharge Point 003 19
Table 11. Additional Water Quality-Based Effluent Limitations at Discharge Point 003 20
Table 12. Effluent Limitations at Discharge Point 004 20
Table 13. Receiving Waters and Effluent Selenium Characterization Study Tasks and Schedule 23
Table 14. Thermal Plume Monitoring Study and Tasks 25
Table 15. Cyanide Action Plan 29
Table 16. Copper Action Plan 30

Attachments

Attachment A – Definitions A-1
Attachment B – Facility Map B-1
Attachment C – Process Flow Diagram C-1
Attachment D – Federal Standard Provisions D-1
Attachment E – Monitoring and Reporting Program (MRP) E-1
Attachment F – Fact Sheet F-1
Attachment G – Regional Standard Provisions, and Monitoring and Reporting Requirements (Supplement to Attachment D) G-1

I. FACILITY INFORMATION

The following Discharger is subject to the waste discharge requirements set forth in this Order:

Table 4. Facility Information

Discharger	ConocoPhillips Company
Name of Facility	San Francisco Refinery at Rodeo
Facility Address	1380 San Pablo Avenue
	Rodeo, CA 94572
	Contra Costa County
Facility Contact, Title, Phone No.	Dennis Quilici, Water Compliance Specialist (510) 245-4403
Mailing Address	1380 San Pablo Avenue, Rodeo, CA 94572
Type of Facility	Petroleum Refinery
Facility Flow (January 2005- March 2010)	Discharge Point 002: 8.89 million gallons per day (MGD) (maximum reported daily flow) Discharge Point 003: 54.0 MGD (maximum reported daily flow) Discharge Point 004: Not Available

II. FINDINGS

The California Regional Water Quality Control Board, San Francisco Bay Region (hereinafter Regional Water Board), finds:

A. Background. The ConocoPhillips Company (hereinafter Discharger) currently discharges under Order No. R2-2005-0030 (hereinafter previous permit) and National Pollutant Discharge Elimination System (NPDES) Permit No. CA0005053. Order No. R2-2005-0030 was amended by Order No. R2-2010-0056, which implemented site-specific objectives for cyanide and copper, and by Order No. R2-2010-0057, which amended requirements for selenium. The Discharger submitted a Report of Waste Discharge dated March 4, 2010, and applied for reissuance of its NPDES permit to discharge treated wastewater and stormwater from the San Francisco Refinery at Rodeo (hereinafter Facility). The Facility's discharges also currently are regulated under Order No. R2-2007-0077 (NPDES Permit CA0038849), which supersedes all requirements on mercury and PCBs from wastewater discharges in the region. This Order does not affect Order No. R2-2007-0077.

For purposes of this Order, references to the "Discharger" or "Permittee" in applicable federal and State laws, regulations, plans, or policies are held to be equivalent to references to the Discharger herein.

B. Facility Description. The Discharger owns and operates the Facility, which processes an average crude oil throughput of approximately 77,360 barrels per day (bbls/day). The Facility produces gasoline, diesel fuel, jet fuel, fuel oil, and other petroleum products. Sulfur and petroleum coke are sold as by-products. The Facility discharges to San Pablo Bay via three outfalls (Discharge Points 002, 003, and 004). Attachment B shows the facility location. Attachment C shows the Facility's wastewater flows.

1. **Discharge Point 002.** The Facility's wastewater treatment plant treats and discharges the following treated wastewaters (and annual average flows) from Discharge Point 002: refinery process wastewaters (1.7 MGD), boiler blowdown (0.1 MGD), cooling tower blowdown (0.3 MGD), sanitary wastewater (0.012 MGD), sour water stripper bottoms (0.5 MGD), groundwater (0.001 MGD), stormwater runoff from refinery process areas (0.56 MGD), and offsite wastewater generated at other ConocoPhillips facilities, including remediation wastewater and cargo hold washwater (0.01 MGD). Periodically, water from process area fire equipment monitoring and fire hydrant testing also is directed to the wastewater treatment plant.

   The Facility's wastewater collection system transports all process wastewater (with the exception of wastewater from the lower tank farm), refinery process area stormwater, and sanitary wastewater to a stormwater splitter box. Some process wastewater is treated by non-phenolic and phenolic sour water strippers, and the Selenium Reduction Plant, prior to entering the Facility's wastewater collection system.

   Wastewater that flows from the stormwater splitter box or lower tank farm to the dry and wet weather sumps is pumped to equalization and storage tanks, then flows by gravity to an American Petroleum Institute (API) oil-water separator, which removes most oil and solids. Removed oil is transferred to an oil recovery system, and solids are transferred to a collection tank. API oil-water separator effluent flows to a flash-mixing chamber, where primary and secondary coagulants may be added, then to dissolved air flotation (DAF) units, which remove remaining oil and solids.

   If wastewater flow exceeds the pumping capacity of the wet weather sumps and/or volumetric capacity of the equalization tanks, excess wastewater overflows to primary and main storm basins. When wastewater flow returns to normal, wastewater in the primary and main storm basins is drained back to the wet weather sumps and pumped to the equalization tanks.

   DAF unit effluent is treated by biological oxidation (activated sludge), augmented by powdered activated carbon (PAC) treatment, in two parallel aeration tanks. Biological solids, spent PAC, and inert solids are then settled out in two parallel clarifiers. The settled biological solids and PAC are recycled based on sludge age and influent wastewater flow. The Discharger also routes a portion of the recycled solids to its wet air regeneration system.

   Clarifier effluent is normally filtered by granular media filters (up to 8 operate in parallel), then routed by gravity to a sump, from which it is pumped to a deepwater diffuser in San Pablo Bay at Discharge Point 002. Treated wastewater is disinfected using sodium hypochlorite and dechlorinated using sodium bisulfite before discharge. The Facility can redirect treated flows to Discharge Point 003 if there is a failure in the deepwater diffuser line (which, to date, has never occurred).

2. **Discharge Point 003.** The Facility discharges once-through, non-contact cooling water (38.3 MGD); demineralizer regeneration wastewater (0.2 MGD); and stormwater from non-industrial and undeveloped areas of the refinery, sections of Interstate 80, San Pablo Avenue, adjacent parking lots and paved areas, and residential portions of Rodeo (0.45 MGD) through Discharge Point 003. Once-through cooling water and demineralizer regeneration wastewater

are monitored at Monitoring Point EFF-003B; the remaining flow is monitored at Monitoring Point EFF-003A. Discharges other than once-through cooling water are less than 2 percent of the flow from Discharge Point 003. The Facility can chlorinate cooling water before use, as needed, and dechlorinate it after use, before it mixes with stormwater runoff and is discharged. Fresh water may be used as a substitute or supplement for once-through, non-contact cooling water if necessary as a result of loss of saltwater pump flow or maintenance work on the saltwater cooling system.

Once-through cooling water discharge flows are conveyed below grade through a 36-inch pipe, across refinery property and under Highway 40 (San Pablo Avenue), daylighting in an open splitter-box. Flows from the splitter-box lead separately to an open channel and to a large, shallow retention basin. Cooling water flows across the basin down a short rock weir to rejoin the divided flow in the open channel, which goes around the retention basin. This system reduces the temperature of the discharge. The combined flows are discharged at Discharge Point 003, located approximately 20 meters downstream from the confluence of the basin and open channel.

The intake structure for once-through, non-contact saltwater is located at the base of the Marine Terminal Causeway, 2,500 feet to the north. The intake structure consists of four intake bays with 30-inch diameter T-shaped intake pipes covered by 3/32-inch mesh wedgewire screens, with five pumps capable of withdrawing a maximum flow of 49,000 gallons per minute (gpm). Typically, a maximum of four are operated at a time. The wedgewire screens are part of a system to reduce impingement and entrainment of aquatic life.

3. **Discharge Point 004.** The Facility discharges stormwater runoff from its marine terminal complex, including the wharf and access road causeway, directly to San Pablo Bay. The Discharger has developed and implements a stormwater pollution prevention program addressing this discharge. Fire equipment monitoring and fire hydrant testing water is discharged from the Marine Terminal during annual safety testing. Steam and, potentially, condensate drips are discharged from steam traps on insulated pipelines along the Marine Terminal causeway. Infrequent discharges of boom boat wash-off water and algae removal water from the boat launch ramp occur, if necessary.

C. Legal Authorities. This Order is issued pursuant to Clean Water Act (CWA) section 402 and implementing regulations adopted by USEPA, and California Water Code (CWC) Chapter 5.5, Division 7 (commencing with section 13370). It shall serve as an NPDES permit for the point source discharges identified in Table 2. This Order also serves as Waste Discharge Requirements (WDRs) pursuant to CWC Article 4, Chapter 4, Division 7 (commencing with section 13260).

D. Background and Rationale for Requirements. The Regional Water Board developed the requirements in this Order based on information submitted as part of the application, through monitoring and reporting programs, and other available information. The Fact Sheet (Attachment F), which contains background information and rationale for Order requirements, is hereby incorporated into this Order and constitutes part of the findings for this Order. Attachments A through E and G are also incorporated into this Order.

E. California Environmental Quality Act (CEQA). Pursuant to CWC section 13389, this action to adopt an NPDES permit is exempt from CEQA provisions.

F. Technology-Based Effluent Limitations. CWA section 301(b) and NPDES regulations at 40 CFR 122.44 require permits, at a minimum, to include conditions meeting applicable technology-based requirements and any more stringent effluent limitations necessary to meet applicable water quality standards. Discharges authorized by this Order must meet technology-based requirements USEPA established at 40 CFR 419, *Effluent Limitations Guidelines for the Petroleum Refining Point Source Category*, as well as any technology-based requirements established using Best Professional Judgment (BPJ) pursuant to 40 CFR 125.3. The Fact Sheet includes a detailed discussion of the development of the technology-based effluent limitations in this Order.

G. Water Quality-Based Effluent Limitations. CWA section 301(b) and NPDES regulations at 40 CFR 122.44(d) require that permits include limitations more stringent than applicable federal technology-based requirements when necessary to achieve applicable water quality standards. NPDES regulations at 40 CFR 122.44(d)(1)(i) mandate that permits include effluent limitations for all pollutants that are or may be discharged at levels that have a reasonable potential to cause or contribute to an exceedance of a water quality standard, including numeric and narrative objectives within a standard. Where reasonable potential has been established for a pollutant, but there is no numeric objective for the pollutant, water quality-based effluent limitations (WQBELs) must be established using (1) USEPA criteria guidance under CWA section 304(a), supplemented where necessary by other relevant information; (2) an indicator parameter for the pollutant of concern; or (3) a calculated numeric water quality criterion, such as a proposed State criterion or policy interpreting the State's narrative criterion, supplemented with other relevant information, as provided in 40 CFR 122.44(d)(1)(vi).

H. Water Quality Control Plans. *The Water Quality Control Plan for the San Francisco Bay Basin* (hereinafter Basin Plan) is the Regional Water Board's master water quality control planning document. It designates beneficial uses and water quality objectives for waters of the State, including surface waters and groundwater. It also includes programs of implementation to achieve water quality objectives. The Basin Plan was adopted by the Regional Water Board and approved by the State Water Resources Control Board (hereinafter State Water Board), the Office of Administrative Law (OAL), and USEPA, as required.

The Basin Plan implements State Water Board Resolution No. 88-63, which establishes State policy that all waters, with certain exceptions, should be considered suitable or potentially suitable for municipal or domestic supply (MUN). Because of the marine influence on receiving waters of San Francisco Bay, total dissolved solids levels in San Francisco Bay commonly (and often significantly) exceed 3,000 mg/L and thereby meet an exception to State Water Board Resolution No. 88-63. The designation MUN does not apply to San Pablo Bay. Table 5 lists beneficial uses the Basin Plan identifies as applicable to San Pablo Bay. Requirements of this Order implement the Basin Plan.

Table 5. Beneficial Uses of Receiving Waters

Discharge Point(s)	Receiving Water Name	Beneficial Uses
002, 003, 004	San Pablo Bay	Industrial Service Supply (IND)

Discharge Point(s)	Receiving Water Name	Beneficial Uses
		Ocean, Commercial and Sport Fishing (COMM) Shellfish Harvesting (SHELL) Estuarine Habitat (EST) Fish Migration (MIGR) Preservation of Rare and Endangered Species (RARE) Fish Spawning (SPWN) Wildlife Habitat (WILD) Water Contact Recreation (REC1) Non-Contact Water Recreation (REC2) Navigation (NAV)

The State Water Board adopted the *Water Quality Control Plan for Control of Temperature in the Coastal and Interstate Water and Enclosed Bays and Estuaries of California* (hereinafter Thermal Plan) on May 18, 1972, and amended this plan on September 18, 1975. This plan contains temperature objectives for surface waters. Requirements of this Order implement the Thermal Plan.

The State Water Board's *Water Quality Control Plan for Enclosed Bays and Estuaries – Part 1, Sediment Quality* became effective on August 25, 2009. This plan supersedes other narrative sediment quality objectives, and establishes new sediment quality objectives and related implementation provisions for specifically defined sediments in most bays and estuaries.

I. **National Toxics Rule (NTR) and California Toxics Rule (CTR)**. USEPA adopted the NTR on December 22, 1992, and later amended it on May 4, 1995, and November 9, 1999. About forty criteria in the NTR applied in California. On May 18, 2000, USEPA adopted the CTR. The CTR promulgated new toxics criteria for California and, in addition, incorporated the previously adopted NTR criteria that applied in the State. The CTR was amended on February 13, 2001. These rules contain water quality criteria for priority pollutants.

J. **State Implementation Policy.** On March 2, 2000, the State Water Board adopted the *Policy for Implementation of Toxics Standards for Inland Surface Waters, Enclosed Bays, and Estuaries of California* (hereinafter State Implementation Policy or SIP). The SIP became effective on April 28, 2000, with respect to the priority pollutant criteria USEPA promulgated for California through the NTR and to the priority pollutant objectives the Regional Water Board established in the Basin Plan. The SIP became effective on May 18, 2000, with respect to the priority pollutant criteria USEPA promulgated through the CTR. On February 24, 2005, the State Water Board adopted amendments to the SIP that became effective on July 13, 2005. The SIP establishes implementation provisions for priority pollutant objectives and provisions for chronic toxicity control. Requirements of this Order implement the SIP.

K. **Compliance Schedules and Interim Requirements.** The State Water Board adopted Resolution No. 2008-0025 on April 15, 2008, titled *Policy for Compliance Schedules in National Pollutant Discharge Elimination System Permits*. Under limited circumstances, this policy allows the Regional Water Board to grant a compliance schedule based on a Discharger's request and demonstration that it is infeasible to comply immediately with certain effluent limitations. This

policy became effective on August 27, 2008. This Order does not include a compliance schedule or interim effluent limitations.

L. Alaska Rule. On March 30, 2000, USEPA revised its regulation that specifies when new and revised State and tribal water quality standards become effective for CWA purposes [65 Fed. Reg. 24641 (April 27, 2000) (codified at 40 CFR 131.21)]. Under the revised regulation (also known as the Alaska Rule), USEPA must approve new and revised standards submitted to USEPA after May 30, 2000, before they can be used for CWA purposes. The final rule also provides that standards already in effect and submitted to USEPA by May 30, 2000, may be used for CWA purposes, whether or not approved by USEPA.

M. Stringency of Requirements for Individual Pollutants. This Order contains both technology-based effluent limitations and WQBELs for individual pollutants. This Order's technology-based pollutant restrictions implement the minimum applicable federal technology-based requirements. In addition, this Order contains effluent limitations more stringent than the minimum federal technology-based requirements as necessary to meet water quality standards. These limitations are not more stringent than required by the CWA.

WQBELs have been derived to implement water quality objectives that protect beneficial uses. Both the beneficial uses and the water quality objectives have been approved pursuant to federal law and are the applicable federal water quality standards. To the extent that toxic pollutant WQBELs were derived from the CTR, the CTR is the applicable standard pursuant to 40 CFR 131.38. The procedures for calculating the individual WQBELs for priority pollutants are based on the SIP, which was approved by USEPA on May 18, 2000. All beneficial uses and water quality objectives in the Basin Plan approved under State law after May 30, 2000, were submitted to and approved by USEPA. Any water quality objectives and beneficial uses submitted to USEPA prior to May 30, 2000, but not approved by USEPA before that date, are nonetheless applicable water quality standards for CWA purposes pursuant to 40 CFR 131.21(c)(1). Collectively, this Order's restrictions on individual pollutants are no more stringent than required to implement CWA requirements.

N. Antidegradation Policy. 40 CFR 131.12 requires that state water quality standards include an antidegradation policy consistent with the federal policy. The State Water Board established California's antidegradation policy through State Water Board Resolution No. 68-16, which incorporates the federal antidegradation policy where the federal policy applies under federal law and requires that the existing quality of receiving waters be maintained unless degradation is justified based on specific findings. The Basin Plan incorporates by reference and implements both the State and federal antidegradation policies. As discussed in the Fact Sheet, the permitted discharges are consistent with the antidegradation provisions of 40 CFR 131.12 and State Water Board Resolution No. 68-16.

O. Anti-Backsliding Requirements. CWA sections 402(o)(2) and 303(d)(4) and 40 CFR 122.44(l) prohibit backsliding in NPDES permits. These anti-backsliding provisions require effluent limitations in a reissued permit to be at least as stringent as those in the previous permit, with some exceptions where limitations may be relaxed. Some effluent limitations in this Order are less stringent than those in the previous permit. As discussed in the Fact Sheet, the permitted discharge is consistent with the CWA anti-backsliding requirements and federal regulations.

P. Monitoring and Reporting. 40 CFR 122.48 requires that all NPDES permits specify requirements for recording and reporting monitoring results. CWC sections 13267 and 13383 authorize the Regional Water Board to require technical and monitoring reports. The Monitoring and Reporting Program (Attachment E) establishes monitoring and reporting requirements to implement federal and State requirements.

Q. Standard and Special Provisions. Attachment D contains standard provisions, which apply to all NPDES permits in accordance with 40 CFR 122.41, and additional conditions applicable to specified categories of permits in accordance with 40 CFR 122.42. The Discharger must comply with all Standard Provisions and with those additional conditions that apply pursuant to 40 CFR 122.42. The Regional Water Board has also included in this Order special provisions applicable to the Discharger. The Fact Sheet provides rationales for the special provisions.

R. Provisions and Requirements Implementing State Law. There are no provisions or requirements in this Order that implement State law only.

S. Notification of Interested Parties. The Regional Water Board has notified the Discharger and interested agencies and persons of its intent to prescribe Waste Discharge Requirements for the discharge and has provided them with an opportunity to submit written comments and recommendations. The Fact Sheet provides details regarding the notification.

T. Consideration of Public Comment. The Regional Water Board, in a public meeting, heard and considered all comments pertaining to the discharges authorized by this Order. The Fact Sheet provides details regarding the public hearing.

IT IS HEREBY ORDERED, that this Order supersedes Order No. R2-2005-0030, as amended, except for enforcement purposes, and, in order to meet the provisions contained in CWC Division 7 (commencing with section 13000) and regulations adopted thereunder, and CWA provisions and regulations and guidelines adopted thereunder, the Discharger shall comply with the requirements in this Order.

III. DISCHARGE PROHIBITIONS

A. Discharge of treated wastewater, cooling water, other wastewaters as described in the Findings, and stormwater runoff at the locations or in a manner different from that described in this Order is prohibited.

B. Discharge of treated process wastewater at any point that does not receive an initial dilution of at least 37:1 is prohibited.

C. The bypass of untreated or partially treated process wastewater to waters of the United States is prohibited, except as provided for in Attachment D, sections I.G.2 and I.G.4.

IV. EFFLUENT LIMITATIONS AND DISCHARGE SPECIFICATIONS

A. Effluent Limitations – Discharge Point 002

1. Technology-Based Effluent Limitations

a. The Discharger shall comply with the following effluent limitations at Discharge Point 002, with compliance measured at Monitoring Location EFF-002, as described in the attached MRP (Attachment E).

Table 6a. Technology-Based Effluent Limitations at Discharge Point 002

Parameter	Units	Effluent Limitations		
		Average Monthly	Maximum Daily	Instantaneous Maximum
Biochemical Oxygen Demand (BOD) (5-day @ 20 Deg. C)	Lbs/day	910	1,600	--
Total Suspended Solids (TSS)	Lbs/day	730	1,100	--
Chemical Oxygen Demand (COD)	Lbs/day	6,300	12,000	--
Oil and Grease	Lbs/day	260	500	--
Phenolic Compounds, Total	Lbs/day	5.9	12	--
Ammonia Nitrogen, Total (as N)	Lbs/day	500	1,100	--
Sulfide, Total	Lbs/day	4.8	11	--
Chromium, Total	Lbs/day	7.7	22	--
Chromium, Hexavalent	Lbs/day	0.63	1.4	--
Total Residual Chlorine	mg/L	--	--	0.0
pH	s.u.	6.0 – 9.0		--

b. Additional effluent limitation allocations for contaminated runoff commingled with process wastewater are established in addition to the process wastewater mass-based limitations in Provision IV.A.1.a above. When contaminated runoff is discharged through Discharge Point 002, a mass of each pollutant in Table 6b below may be added to the limit for that pollutant in Table 6a. The additional allocation shall be equal to the contaminated runoff flow times the pollutant's concentration in Table 6b.

Table 6b. Additional Contaminated Runoff Effluent Limitation Allocations

Parameter	Units	Average Monthly	Maximum Daily
Biochemical Oxygen Demand (BOD) (5-day @ 20 Deg. C)	mg/L	26	48
Total Suspended Solids (TSS)	mg/L	21	33
Chemical Oxygen Demand (COD)	mg/L	180	360
Oil and Grease	mg/L	8	15
Phenolic Compounds, Total	mg/L	0.17	0.35
Chromium, Total Recoverable	mg/L	0.21	0.60

Parameter	Units	Average Monthly	Maximum Daily
Chromium (VI) Total Recoverable	mg/L	0.028	0.062

c. Additional effluent limitation allocations for ballast water are established in addition to the process wastewater mass-based limitations in Provision IV.A.1.a above. When ballast water is discharged through Discharge Point 002, a mass of each pollutant in Table 6c below may be added to the limit for that pollutant in Table 6a. The additional allocation shall be equal to the ballast water flow times the pollutant's concentration in Table 6c.

Table 6c. Additional Ballast Water Effluent Limitation Allocations

Parameter	Units	Average Monthly	Maximum Daily
Biochemical Oxygen Demand (BOD) (5-day @ 20 Deg. C)	mg/L	26	48
Total Suspended Solids (TSS)	mg/L	21	33
Chemical Oxygen Demand (COD)	mg/L	240	470
Oil and Grease	mg/L	8	15

2. Effluent Limitations for Toxic Substances

The Discharger shall comply with the following effluent limitations at Discharge Point 002, with compliance measured at Monitoring Location EFF-002, as described in the attached MRP (Attachment E):

Table 7. Effluent Limitations for Toxic Substances at Discharge Point 002

Parameter	Units	Final Effluent Limitations[1]	
		Average Monthly	Maximum Daily
Copper	µg/L	48	120
Selenium	µg/L	37	50
Dioxin-TEQ[2]	µg/L	1.4×10^{-8}	2.8×10^{-8}
Benzo(a)Pyrene	µg/L	0.48	0.97
Benzo(b)Fluoranthene	µg/L	0.47	0.95
Bis(2-Ethylhexyl)Phthalate	µg/L	53	110
Chrysene	µg/L	0.48	0.96
Dibenzo(a,h)Anthracene	µg/L	0.49	0.98
Indeno(1,2,3-cd)Pyrene	µg/L	0.48	0.96
Dichlorobromomethane	µg/L	340	650
Total PAHs[3]	µg/L	120	250
Ammonia Nitrogen, Total (as N)	mg/L	61	200

[1] a. Limitations apply to the average concentration of all samples collected during the averaging period (daily = 24-hour period; monthly = calendar month).

b. All metals limitations are expressed as total recoverable metal.

[2] When calculating Dioxin-TEQ, the Discharger shall set individual dioxin and furan congener concentrations that are below minimum levels (MLs) to zero. See also Attachment G, Regional Standard Provision V.C.1.c.(3).

[3] When calculating total PAHs, the Discharger shall set individual PAH concentrations below MLs to zero. Total PAHs refers to the sum of the concentrations of acenaphthene, acenaphthylene, anthracene, benzo(a)anthracene, benzo(a)pyrene, benzo(b)fluoranthene, benzo(g,h,i)perylyene, benzo(k)fluoranthene, chrysene, dibenzo(a,h)antrhacene, fluoranthene, fluorene, indeno(1,2,3-c,d)pyrene, phenanthrene, and pyrene.

3. Mass Emission Limitation for Selenium

Until implementation of a total maximum daily load (TMDL) is in effect for selenium, the Discharger shall comply with the following mass emission limitation at Discharge Point 002, with compliance measured at Monitoring Location EFF-002, as described in the attached MRP (Attachment E).

Selenium mass emissions shall not exceed 0.39 kilograms per day (kg/d) as a running annual average.

The running annual average is the arithmetic average of the current day's mass load and the mass loads for each of the previous 364 days, as shown in the following example:

$$\text{Annual Mass emission rate (kg/day)} = \frac{3.785}{N}\sum_{i=1}^{N} Q_i C_i$$

where:

N = number of samples analyzed in any calendar year

Q_i = flow rate (MGD) associated with the Nth sample

C_i = selenium concentration (mg/L) associated with the Nth sample.

4. Bacteria

The Discharger shall comply with the following effluent limitation at Discharge Point 002, with compliance measured at Monitoring Location EFF-002, as described in the attached MRP (Attachment E):

a) The median total coliform bacteria concentration of all samples in a calendar month shall not exceed 240 MPN/100 mL.

b) The maximum total coliform concentration in any sample shall not exceed 10,000 MPN/100 mL.

5. Acute Toxicity

a. The Discharger shall comply with the following effluent limitations at Discharge Point 002, with compliance measured at Monitoring Location EFF-002. Acute bioassays shall be conducted in compliance with MRP section V.A (Attachment E).

The survival of organisms in undiluted effluent shall be:

i. an eleven (11) sample median value of not less than 90 percent survival, and

ii. an eleven (11) sample 90 percentile value of not less than 70 percent survival.

b. These acute toxicity limitations are further defined as follows:

11 sample median: A bioassay test showing survival of less than 90 percent represents a violation of this effluent limit, if five or more of the past ten or less bioassay tests show less than 90 percent survival.

90th percentile: A bioassay test showing survival of less than 70 percent represents a violation of this effluent limit, if one or more of the past ten or less bioassay tests show less than 70 percent survival.

c. Bioassays shall be performed using the most up-to-date USEPA protocol and the most sensitive species as specified in the MRP. Bioassays shall be conducted in compliance with *Methods for Measuring the Acute Toxicity of Effluents and Receiving Water to Freshwater and Marine Organisms*, currently 5th Edition (EPA-821-R-02-012).

d. If the Discharger can demonstrate to the satisfaction of the Executive Officer that toxicity exceeding the levels cited above is caused by ammonia and that the ammonia in the discharge complies with effluent limitations in Table 7 above, then such toxicity does not constitute a violation of this effluent limitation.

6. Chronic Toxicity

a. The Discharger shall comply with the following effluent limitations at Discharge Point 002, with compliance measured at Monitoring Location EFF-002. Chronic bioassays shall be conducted in compliance with MRP section V.B (Attachment E).

The survival of bioassay test organisms in the discharge at Discharge Point 001 shall be:

(1) An eleven sample median value equal to or less than 10 TUc, and

(2) An eleven sample 90-percentile value equal to or less than 20 TUc.

b. These chronic toxicity limits are defined as follows:

(1) A test sample showing chronic toxicity greater than 10 TUc represents consistent toxicity, and a violation of this limitation if five or more of the past ten or fewer tests show toxicity greater than 10 TUc.

(2) A TUc equals 100/NOEL. The NOEL is the no observable effect level, determined from IC_{25}, EC_{25}, or NOEC values. These terms and their usage in determining compliance with the limitations are defined in Attachment E of this Order. The NOEL shall be based on a critical life stage test using the most sensitive test species as specified in MRP section V.B (Attachment E). If two compliance test species are specified, compliance shall be based in the maximum TUc value for the discharge sample based on a comparison of TUc values obtained through concurrent testing of the two species.

(3) A test sample showing chronic toxicity greater than 20 TUc represents a violation of this limitation, if one or more of the past ten or less samples shows toxicity greater than 20 TUc.

c. Test Species and Methods

The Discharger shall conduct routine monitoring with the test species and protocols specified in MRP section V.B (Attachment E). The Discharger shall also perform Chronic Toxicity Screening Phase monitoring as described in the MRP Appendix E-1 (Attachment E). Chronic Toxicity Monitoring Screening Phase Requirements, Critical Life Stage Toxicity Tests and definitions of terms used in the chronic toxicity monitoring are identified in MRP Appendices E-1 and E-2 (Attachment E).

7. Effluent Limit Adjustments for Recycled Water Use

a. Conditions for Granting Effluent Limit Adjustment

If the Discharger uses recycled water, mass and concentration-based adjustments for influent pollutants listed in Tables 6a and 7, with the exceptions of residual chlorine and total ammonia, may be applied, as appropriate provided provision VI.C.4.c has been met. (The basis for this adjustment is discussed in Fact Sheet section VII.C.4.c.) When applying a recycled water adjustment, the Discharger must report that it has done so and for which pollutant and limit in its transmittal letter to the appropriate Self-Monitoring Report. The Discharger shall also include necessary supporting calculations in the comment field for the effluent data, and/or as an attachment to the Self-Monitoring Report.

(1) The Discharger shall monitor influent concentrations of pollutants for which it seeks effluent limit adjustment at least as frequently as the MRP (Attachment E) requires at Monitoring Location I-002. The timing of sampling at I-002 shall precede sampling at E-002 by the average residence time of the recycled water within the Facility (see below).

(2) The Discharger shall determine, in a manner consistent with good engineering practice, an average residence time for the recycled water within the Facility (i.e., the time interval between when recycled water enters the facility at I-002 and when that recycled water is discharged). Effluent limit adjustment shall apply only after recycled water is introduced to the wastewater treatment plant and the average residence time has passed.

b. Effluent Limit Adjustment Calculations

(1) Mass basis effluent limit adjustment

The effluent limit adjustment shall be calculated on a mass basis as follows:

1. The influent mass of a given pollutant associated with recycled water use shall equal the recycled water volume (average daily flow) multiplied by the pollutant's concentration in the recycled water and an appropriate unit conversion factor:

   $M_p = V_r * c_p * k$

   Where:
   M_p = Influent pollutant mass
   V_r = Recycled water volume
   c_p = Pollutant concentration in recycled water
   k = Unit conversion factor

2. The effluent limit adjustment for a given pollutant shall equal the pollutant mass calculated in step 1, above, divided by the number of days in the monitoring period less the average residence time of recycled water:

   $M_c = M_p/(T_m - T_r)$

   Where:
   M_c = Effluent limit adjustment
   T_m = Monitoring period, days
   T_r = Residence time, days

3. The effluent limit adjustment for a given pollutant shall apply until the end of the monitoring period, accounting for the residence time within the Facility. While the effluent limit adjustment applies, the Discharger shall comply with the adjusted effluent limits, as set forth below, in lieu of those in Table 6a:

   Adjusted Effluent Limit = $M_c + M$

   Where:
   M_c = Effluent limit adjustment
   M = Mass effluent limit in Table 6a

(2) Concentration-based effluent limit adjustment

The effluent limit adjustment shall be calculated on a concentration basis as follows:

1. The influent mass of a given pollutant associated with recycled water use shall equal the recycled water volume (average daily flow) multiplied by the pollutant's concentration in the recycled water and an appropriate unit conversion factor:

   $M_p = V_r * c_p * k$

   Where:
   M_p = Influent pollutant mass
   V_r = Recycled water volume
   c_p = Pollutant concentration in recycled water
   k = Unit conversion factor

2. The effluent limit adjustment for a given pollutant shall equal the pollutant mass calculated in step 1, above, divided by the wastewater effluent volume (average daily flow):

   $C_c = M_p/V_d$

   Where:
   C_c = Effluent limit adjustment
   V_d = Discharge volume

3. The effluent limit adjustment for a given pollutant shall apply until the end of the monitoring period, accounting for the residence time within the Facility. While the effluent limit adjustment applies, the Discharger shall comply with the adjusted effluent limits, as set forth below, in lieu of those in Table 7:

   Adjusted Effluent Limit = $C_c + C$

   Where:
   C_c = Effluent limit adjustment
   C = Concentration effluent limit in Table 7

B. Effluent Limitations – Discharge Point 003

1. Technology-Based Effluent Limitations

The Discharger shall comply with the following effluent limitations at Discharge Point 003, with compliance measured at Monitoring Location EFF-003A, as described in the attached MRP (Attachment E).

Table 8. Technology-Based Effluent Limitations at Discharge Point 003

Parameter	Units	Effluent Limitations			
		Average Monthly	Maximum Daily	Instantaneous Minimum	Instantaneous Maximum
Total Organic Carbon (TOC)	mg/L	5.0	--	--	--

Parameter	Units	Effluent Limitations			
		Average Monthly	Maximum Daily	Instantaneous Minimum	Instantaneous Maximum
Chlorine, Total Residual	mg/L	--	--	--	0.0[1]

[1] Applies only when the facility chlorinates its once-through cooling water.

2. Water Quality-Based Effluent Limitations for Toxic Substances

The Discharger shall comply with the following effluent limitations at Discharge Point 003, with compliance measured at Monitoring Location EFF-003B, as described in the attached MRP (Attachment E):

Table 9. Effluent Limitations for Toxic Substances at Discharge Point 003

Parameter	Units	Effluent Limitations[1]	
		Average Monthly	Maximum Daily
Copper[2]	µg/L	6.6	11
Nickel[2]	µg/L	12	22
Zinc	µg/L	56	95
Dioxin-TEQ[2]	µg/L	1.4×10^{-8}	2.8×10^{-8}

[1] a. Limitations apply to the average concentration of all samples collected during the averaging period (daily = 24-hour period; monthly = calendar month).

b. All metals limitations are expressed as total recoverable metal.

[2] In accordance with Provision IV.B.3, the discharge at Discharge Point 003 qualifies for copper, nickel, and dioxin-TEQ intake water credits.

3. Intake Water Credits

The Discharger qualifies for intake water credits for copper, nickel, and dioxin-TEQ at Discharge Point 003. Effluent sample concentration that exceeds a limitation in Table 9 shall be considered in compliance with that limitation if the arithmetic difference between measured effluent concentration and its respective intake concentration (as measured at I-001 defined in MRP section II in the sample collected on the same day) is less than or equal to the 99th percentile difference value in Table 10. For monthly average intake credits, the comparison shall be between the monthly average of effluent concentrations to the monthly average of the intake concentrations. When applying intake credits, the Discharger must report that it has done so and for which pollutant and limit in its transmittal letter to the appropriate Self-Monitoring Report. The Discharger shall also include necessary supporting calculations in the comment field for the effluent data, and/or as an attachment to the Self-Monitoring Report.

Table 10. 99th Percentile Differences Between Influent and Effluent Concentrations at Discharge Point 003

Parameter	Units	Effluent Limits from Table 9		99th Percentile Difference	
		Monthly Average	Daily Maximum	Monthly Average	Daily Maximum
Copper	µg/L	6.6	11	5.0	9.4
Nickel	µg/L	12	22	10	14
Dioxin-TEQ	µg/L	0.014	0.028	0.75	0.75

4. Additional Water Quality-Based Effluent Limitations

The Discharger shall comply with the following effluent limitations at Discharge Point 003, with compliance measured at Monitoring Location EFF-003A, as described in the attached MRP (Attachment E):

Table 11. Additional Water Quality-Based Effluent Limitations at Discharge Point 003

Parameter	Units	Effluent Limitations	
		Average Monthly	Maximum Daily
pH	s.u.	6.5 - 8.5[2]	
Temperature	°F	110[1]	--

[1] Limitation apply to the average of all samples collected during the averaging period (monthly = calendar month).

[2] Established as an instantaneous minimum of 6.5 and instantaneous maximum of 8.5

C. Effluent Limitations – Discharge Point 004

The Discharger shall comply with the following effluent limitations at Discharge Point 004, with compliance measured at Monitoring Location EFF-004, as described in the attached MRP (Attachment E):

Table 12. Effluent Limitations at Discharge Point 004

Parameter	Units	Effluent Limitations			
		Average Monthly	Maximum Daily	Instantaneous Minimum	Instantaneous Maximum
Total Organic Carbon	mg/L	--	110	--	--
Oil and Grease	mg/L	--	15	--	--
pH	s.u.	--	--	6.5	8.5
Visible Oil	--	None observed			
Visible Color	--	None observed			

V. RECEIVING WATER LIMITATIONS

A. Receiving water limitations are based on water quality objectives in the Basin Plan and are a required part of this Order. The discharges shall not cause the following in San Pablo Bay:

1. Floating, suspended, or deposited macroscopic particulate matter or foams;

2. Bottom deposits or aquatic growths to the extent that such deposits or growths cause nuisance or adversely affect beneficial uses;

3. Alteration of temperature, turbidity, or apparent color beyond present natural background levels;

4. Visible, floating, suspended, or deposited oil and other products of petroleum origin; and

5. Toxic or other deleterious substances to be present in concentrations or quantities that cause deleterious effects on wildlife, waterfowl, or other aquatic biota, or render any of these unfit for human consumption, either at levels created in the receiving waters or as a result of biological concentration.

B. The discharge of waste shall not cause the following limits to be exceeded in waters of the State within one foot of the water surface:

1.	Dissolved Oxygen	5.0 mg/L, minimum The median dissolved oxygen concentration for any three consecutive months shall not be less than 80% of the dissolved oxygen content at saturation. When natural factors cause concentrations less than that specified above, the discharge shall not cause further reduction in ambient dissolved oxygen concentrations.
2.	Dissolved Sulfide	0.1 mg/L, maximum
3.	pH	6.5 (minimum) to 8.5 (maximum), nor caused to vary from normal ambient pH by more than 0.5 pH units.
4.	Nutrients	Waters shall not contain biostimulatory substances in concentrations that promote aquatic growths to the extent that such growths cause nuisance or adversely affect beneficial uses.

C. The discharge shall not cause a violation of any water quality standard for receiving waters adopted by the Regional Water Board or the State Water Board as required by the CWA and regulations adopted thereunder. If more stringent applicable water quality standards are promulgated or approved, as provided in Section VI.C.1 of this Order, the Regional Water Board may revise and modify this Order in accordance with them.

VI. PROVISIONS

A. Standard Provisions

1. Federal Standard Provisions

The Discharger shall comply with the Federal Standard Provisions included in Attachment D of this Order.

2. Regional Standard Provisions

The Discharger shall comply with all applicable items of the Regional Standard Provisions and Monitoring and Reporting Requirements (Supplement to Attachment D) for NPDES Wastewater Discharge Permits (Attachment G of this Order), including amendments thereto.

B. Monitoring and Reporting Program (MRP) Requirements

The Discharger shall comply with the MRP (Attachment E) and future revisions thereto, including applicable sampling and reporting requirements in the two standard provisions listed in Provision VI.A, above.

C. Special Provisions

1. Reopener Provisions

The Regional Water Board may modify or reopen this Order (in accordance with federal regulations) prior to its expiration date in any of the following circumstances as allowed by law:

a. If present or future investigations demonstrate that the discharge governed by this Order will have, or will cease to have, a Reasonable Potential to cause or contribute to adverse impacts on water quality or beneficial uses of the receiving waters.

b. If new or revised water quality objectives or TMDLs come into effect for the San Francisco Bay estuary and contiguous water bodies (whether statewide, regional, or site-specific). In such cases, effluent limitations in this Order may be modified as necessary to reflect updated water quality objectives and wasteload allocations in TMDLs. Adoption of effluent limitations in this Order is not intended to restrict in any way future modifications based on legally adopted water quality objectives or TMDLs, or as otherwise permitted under federal regulations governing NPDES permit modifications.

c. If translator or other water quality studies provide a basis for determining that a permit condition should be modified.

d. If an administrative or judicial decision on a separate NPDES permit or WDR addresses requirements similar to this discharge.

e. Or as otherwise authorized by law.

The Discharger may request a permit modification based on the above. The Discharger shall include in any such request an antidegradation and anti-backsliding analysis.

2. Special Studies and Additional Monitoring

a. Effluent Characterization Study – Discharge Point 002

The Discharger shall continue to monitor and evaluate the discharge from the Facility (measured at Monitoring Location EFF-002) for the constituents listed in the Regional Standard Provisions (Attachment G) according to the sampling frequency specified in the MRP (Attachment E). Compliance with this requirement shall be achieved in accordance with the Regional Standard Provisions.

The Discharger shall evaluate on an annual basis if concentrations of any constituent increase over past performance. The Discharger shall investigate the cause of any such

increase. The investigation may include, but need not be limited to, an increase in the effluent monitoring frequency, monitoring of internal process streams, and monitoring of influent sources. This requirement may be satisfied through identification of these constituents as "pollutants of concern" in the Discharger's Pollutant Minimization Program described in Provision VI.C.3, below. A summary of the annual data evaluation and source investigation activities shall be reported in the annual self-monitoring report.

A final report that presents all the data shall be submitted to the Regional Water Board no later than 180 days prior to the Order expiration date. This final report shall be submitted with the application for permit reissuance.

b. Ambient Background Receiving Water Study

The Discharger shall collect, or participate in collecting, ambient background receiving water priority pollutant monitoring data necessary to perform reasonable potential analyses and to calculate effluent limitations. The data on the conventional water quality parameters (pH, salinity, and hardness) shall also be sufficient to characterize these parameters in the receiving waters at a point after the discharge has mixed with the receiving waters. This provision may be met through the Collaborative Bay Area Clean Water Agencies (BACWA) Study or a similar ambient monitoring program for San Francisco Bay. This Order may be reopened, as appropriate, to incorporate effluent limits or other requirements based on these data.

c. Effluent and Receiving Water Selenium Characterization Study – Discharge Point 002

The Discharger shall comply with the tasks and schedule set forth in Table 13. The Discharger may complete, or cause to be completed, all or some of the required tasks collaboratively. All submittals shall be acceptable to the Executive Officer. Upon request by the Discharger, the Executive Officer may modify the deadlines for the following tasks by no more than three years if good cause exists, such as delays in data collection, sample collection, analytical turnaround, or receipt of third party reports; laboratory QA/QC problems; other factors outside the Discharger's control; or new information that warrants schedule modification. Good cause does not include delays caused by the Discharger, or that could have been reasonably avoided. Any requests for schedule modification shall be in writing with necessary justification. Any approval shall also be in writing.

Table 13. Receiving Waters and Effluent Selenium Characterization Study Tasks and Schedule

Tasks	Compliance Date
1. Submit a study plan for a minimum two-year study that includes the following elements: (a) effluent and receiving water sampling locations (the effluent sampling location may be the existing effluent compliance sampling point; receiving water sampling locations shall be within a 100-foot radius of the outfall to characterize near-field concentrations and speciation); (b) receiving water sampling along transects from the Pacific Ocean (Golden	Completed

Tasks	Compliance Date
Gate) to the Sacramento River (Rio Vista) and San Joaquin River (USGS Station 757), including sampling in the freshwater portions of the rivers at Vernalis (San Joaquin River) and Freeport (Sacramento River); (c) sampling and analysis protocols (including means to evaluate seasonal conditions under low and high flows from the Sacramento / San Joaquin River Delta, selenium concentrations in the water column and suspended particles, and speciation and particulate selenium content in the effluent); (d) comparison of the proposed protocols and analytical methods to previous sampling efforts; (e) sampling parameters (including, at a minimum, salinity, carbon, nitrogen, and chlorophyll-a in receiving water, and dissolved and particulate selenate, selenite, organic selenides, and elemental selenium concentrations in both effluent and receiving water); (f) data interpretation models and other methods to be used (representing conservative, reasonable worst case conditions); and (g) implementation schedule.	
2. Begin implementation of the study plan developed for Task (1).	Completed
3. Submit a status report for Tasks 1 and 2 containing, at a minimum, monitoring data collected since the beginning of the study, summary of results to date, and necessary updates to the study plan.	Completed
4. Submit a final study report that includes the following elements: (a) sampling results, data interpretation, and conclusions, such as receiving water and mixing zone characterization, seasonal variability, etc.; (b) effluent characterization; (c) determination if there is reasonable potential for selenium in the discharge to violate the Basin Plan's narrative bioaccumulation objective through the use of pertinent models; (d) comparison of near-field selenium water column concentrations to applicable numeric objectives; (e) demonstration of spatial and temporal extent to which the objectives and other relevant guidelines are being exceeded; and (f) determination of whether selenium levels adversely affect food web or wildlife, or contribute to bioaccumulation.	August 15, 2012

d. Thermal Plume Monitoring – Discharge Point 003

To determine the extent of the potential impact of the elevated-temperature discharge on aquatic life, the Discharger shall implement a thermal plume monitoring study as described in the table below. If requested by the Discharger, the Executive Officer may modify the deadlines for the following tasks and schedule by no more than 3 years if good cause exists, such as data collection delays, sample collection or laboratory quality control problems, analytical turnaround times, third party reports, or other factors outside the Discharger's control. Any requests for modifications must be in writing with necessary justification. Any approval must be in writing.

Table 14. Thermal Plume Monitoring Study and Tasks

Tasks	Compliance Date
1. The Discharger shall prepare and submit a Phase 2 thermal plume study plan and schedule, in accordance with the recommendations provided in the Phase 1 study (*Cooling Water Discharge Thermal Plume Study*, *2006-2007*, Tenera Environmental, September 24, 2007). The Discharger shall meet with the Regional Water Board, National Marine Fisheries Service, and California Department of Fish and Game to discuss the Phase 1 study conclusions and the need for and focus of the Phase 2 study. The Phase 2 study plan shall include additional monitoring of the large cove south of the Facility for impacts on ambient temperature, biological monitoring to determine the impact of the thermal plume from the Facility on aquatic life, and recommendations for, and implementation of, management alternatives to reduce the discharge temperature and minimize potential impacts. The study plan shall be acceptable to the Executive Officer; if no changes or comments are provided within 45 days of submittal, the Discharger may assume that the study plan is acceptable. The Discharger shall also send copies of the plan to the California Department of Fish and Game and National Marine Fisheries Service.	July 29, 2011
2. The Discharger shall commence implementation of the Phase 2 thermal plume study in accordance with the study plan and schedule incorporating any changes the Executive Officer may provide to the Discharger.	October 28, 2011
3. The Discharger shall complete the Phase 2 thermal plume study and submit a final report containing its findings, conclusions, and recommendations, including any measures necessary to ensure the protection of beneficial uses, and a schedule to implement those measures. The report shall be acceptable to the Executive Officer; if no changes or comments are provided within 45 days of submittal, the Discharger may assume that the study plan is acceptable.	December 15, 2012
4. The Discharger shall commence implementation of measures identified in the final report as necessary to ensure the protection of beneficial uses incorporating any changes the Executive Officer may provide to the Discharger.	In accordance with the schedule set forth in the final report.
5. The Discharger shall report on its progress toward implementing the measures identified in the final report as necessary to ensure the protection of beneficial uses.	Annually on February 1, with annual self-monitoring reports

e. Once-Through Cooling Water Intake Structure

i. The Discharger shall properly operate the once-through cooling water intake structure in accordance with its Maintenance Procedure Manual so as to minimize impingement and entrainment of fish, shellfish, and other organisms.

ii. The Discharger shall prepare and submit an annual report that certifies the proper operation and maintenance of the once-through cooling water intake structure,

identifying any operational problems or necessary changes to the Maintenance Procedure Manual; and identifies work planned or completed that is beyond routine maintenance. The Discharger shall submit this annual status report annually with its annual self-monitoring report.

f. Cooling Tower Replacement Feasibility Evaluation

By September 30, 2012, the Discharger shall prepare and submit a Cooling Tower Replacement Feasibility Evaluation. This evaluation shall include, at a minimum, the following elements:

- An evaluation of the Facility's existing heat exchangers and cooling water system condition and remaining design life of critical structures;
- A conceptual design for a closed loop cooling tower system, including estimated costs (capital and operation) and construction timetable;
- An impacts evaluation on refinery process operations that may result from implementation of a closed loop cooling system; and
- An analysis of the costs of replacing the existing cooling system compared to potential benefits of a closed loop cooling system.

In submitting this technical report, the Discharger shall also send copies to the California Department of Fish & Game, and National Oceanic and Atmospheric Administration – National Marine Fisheries Service.

If requested by the Discharger, the Executive Officer may modify the deadline for this study by no more than 3 years if good cause exists due to factors outside the Discharger's control. Any requests for modifications must be in writing with necessary justification. Any approval must be in writing.

g. Dilution Modeling – Discharge Point 002

The Discharger shall perform a dilution modeling study for the deepwater diffuser at Discharge Point 002 and report the results no later than 180 days prior to the expiration date of this Order (the Discharger may report the results with its application for permit reissuance). The study shall use a USEPA-approved modeling program such as Visual PLUMES or CORMIX and estimate the initial dilution at Discharge Point 002 at slack tide for both the maximum wet-weather discharge and the average daily discharge.

3. Best Management Practices and Pollution Minimization

a. The Discharger shall continue to improve, in a manner acceptable to the Executive Officer, its Pollution Minimization Program to promote minimization of pollutant loadings to the treatment plant and therefore to the receiving waters.

b. The Discharger shall submit an annual report, acceptable to the Executive Officer, no later than February 28 of each calendar year. Each annual report shall include at least the following information:

i. *A brief description of the treatment plant and treatment plant processes.*

ii. *A discussion of the current pollutants of concern.* Periodically, the Discharger shall determine which pollutants are currently a problem and which pollutants may be potential future problems. This discussion shall include the reasons for choosing the pollutants.

iii. *Identification of sources of pollutants of concern.* This discussion shall address how the Discharger intends to estimate and identify sources of pollutants of concern. The Discharger shall also identify sources or potential sources not directly within its ability or authority to control, such as pollutants in the potable water supply and air deposition.

iv. *Identification of tasks to reduce the sources of pollutants of concern.* This discussion shall identify and prioritize tasks to address the Discharger's pollutants of concern. The Discharger may implement tasks themselves or participate in group, regional, or national tasks that will address its pollutants of concern. The Discharger is strongly encouraged to participate in group, regional, or national actions that will address its pollutants of concern whenever it is efficient and appropriate to do so. A time line shall be included for the implementation of each task.

v. *Outreach to employees.* The Discharger shall inform its employees regarding pollutants of concern, potential sources, and how they might be able to help reduce discharge of these pollutants into the treatment facilities. The Discharger may provide a forum for employees to provide input.

vi. *Discussion of criteria used to measure Pollutant Minimization Program and task effectiveness.* The Discharger shall establish criteria to evaluate the effectiveness of its Pollutant Minimization Program. The section shall discuss the specific criteria used to measure the effectiveness of each task in sections VI.C.3.b.iv and v.

vii. *Documentation of efforts and progress.* This discussion shall detail all of the Discharger's activities in the Pollutant Minimization Program during the reporting year.

viii. *Evaluation of Pollutant Minimization Program and task effectiveness.* The Discharger shall use the criteria established in section VI.C.3.b.vi to evaluate the Program's and tasks' effectiveness.

ix. *Identification of specific tasks and time schedules for future efforts.* Based on the evaluation, the Discharger shall describe how it intends to continue or change its tasks to more effectively reduce the loading of pollutants to the treatment plant and subsequently in its effluent.

c. Pollutant Minimization Program for Pollutants with Effluent Limitations

The Discharger shall develop and conduct a Pollutant Minimization Program as further described below when there is evidence that a priority pollutant is present in the effluent

above an effluent limitation (e.g., sample results reported as "detected but not quantified" (DNQ) when the effluent limitation is less than the method detection limit (MDL), sample results from analytical methods more sensitive than those methods required by this Order, presence of whole effluent toxicity, health advisories for fish consumption, results of benthic or aquatic organism tissue sampling) and either:

i. A sample result is reported as DNQ and the effluent limitation is less than the reporting level (RL); or

ii. A sample result is reported as ND and the effluent limitation is less than the MDL, using SIP definitions.

d. Pollutant Minimization Program Submittals for Pollutants with Effluent Limitations

If triggered by the reasons in section VI.C.3.c., above, the Discharger's Pollutant Minimization Program shall include, but not be limited to, the following actions and submittals acceptable to the Regional Water Board:

i. Annual review and semi-annual monitoring of potential sources of the reportable priority pollutants, which may include fish tissue monitoring and other bio-uptake sampling, or alternative measures approved by the Executive Officer when it is demonstrated that source monitoring is unlikely to produce useful analytical data;

ii. Quarterly monitoring for the reportable priority pollutants in the influent to the wastewater treatment system, or alternative measures approved by the Executive Officer when it is demonstrated that influent monitoring is unlikely to produce useful analytical data;

iii. Submittal of a control strategy designed to proceed toward the goal of maintaining concentrations of the reportable priority pollutants in the effluent at or below effluent limitations;

iv. Implementation of appropriate cost-effective control measures for the reportable priority pollutants, consistent with the control strategy; and

v. Annual report required by section VI.C.3.b above, which shall specifically include the following items:

(a) All Pollutant Minimization Program monitoring results for the previous year;

(b) List of potential sources of the reportable priority pollutants;

(c) Summary of all actions undertaken pursuant to the control strategy; and

(d) Description of actions to be taken in the following year.

e. Best Management Practices Plan – Discharge Point 004

(1) The Discharger shall maintain a Best Management Practices (BMP) plan in usable condition and available for reference and use by all applicable personnel. The BMP plan shall address the periodic discharges from the marine terminal causeway area, including fire equipment monitoring and fire hydrant testing water, boom boat wash-off water, steam condensate drips from lines at the marine terminal causeway, and algae removal water from the boat launch ramp, all of which are discharged directly to San Pablo Bay. The BMP plan shall be developed and implemented to minimize the potential impact of these periodic discharges on San Pablo Bay, to prevent the accidental release of toxic or hazardous substances into the environment, and to minimize and mitigate the effects of such releases using equipment and techniques available and practical for such use. The BMP plan shall be consistent with the guidance provided in USEPA *Guidance Manual for Developing Best Management Practices (BMP)* (October 1993, EPA 833-B-93-004).

(2) The Discharger shall regularly review, revise, or update, as necessary, the BMP plan to ensure that it remains useful and relevant to current equipment and operation practices. Reviews shall be conducted annually, and revisions or updates shall be completed as necessary. Applicable revisions of the BMP plan shall be completed within 90 days of any significant changes being made in facility equipment or operation practices.

(3) The Discharger shall provide the Executive Officer a report describing the current status of its BMP plan, including any recommended or planned actions and an estimated time schedule for these actions, upon request. The Discharger shall also include a description or summary of review and evaluation procedures and applicable changes to its BMP plan in each Annual Self-Monitoring Report.

4. Other Special Provisions

a. Cyanide Action Plan

The Discharger shall implement monitoring and surveillance, source control, and pollution prevention for cyanide in accordance with the following tasks and time schedule.

Table 15. Cyanide Action Plan

Task	Compliance Date
1. Review Potential Cyanide Contributors The Discharger shall submit an inventory of potential cyanide sources to its treatment plant.	Completed June 9, 2010

Task	Compliance Date
2. Implement Cyanide Control Program The Discharger shall submit a plan and begin implementation of a program to minimize cyanide discharges due to sources identified in its June 9, 2010, letter report *Cyanide and Copper Action Plan Inventories*, consisting, at a minimum, of the following elements: a. Inspect each potential source to assess the need to include that contributing source in the control program. b. Prepare an emergency monitoring and response plan to be implemented if a significant cyanide discharge occurs.	Completed February 28, 2011
3. Implement Additional Cyanide Control Measures If the Regional Water Board notifies the Discharger that ambient monitoring shows cyanide concentrations are 1.0 µg/L or higher in the main body of San Francisco Bay, then within 90 days of the notification, the Discharger shall commence actions to identify and abate cyanide sources responsible for the elevated ambient concentrations, and shall report on the progress and effectiveness of actions taken, together with a schedule for actions to be taken in the next 12 months.	With next annual pollution prevention report due February 28 (at least 90 days following notification)
4. Report Status of Cyanide Control Program The Discharger shall submit an annual report documenting cyanide control program implementation and addressing the effectiveness of actions taken, including any additional cyanide controls required by Task 3, above, together with a schedule for actions to be taken in the next 12 months.	With annual pollution prevention report due February 28 each year

b. Copper Action Plan

The Discharger shall implement source control and pollution prevention for copper in accordance with the following tasks and time schedule.

Table 16. Copper Action Plan

Task	Compliance Date
1. **Implement Copper Control Program** The Discharger shall submit a plan for and begin implementation of a program to reduce copper sources identified in its June 9, 2010, letter report *Cyanide and Copper Action Plan Inventories*.	Completed February 28, 2011
2. **Implement Additional Measures** If the Regional Water Board notifies the Discharger that the three-year rolling mean dissolved copper concentration of San Pablo Bay exceeds 3.0 µg/L, then within 90 days of the notification, the Discharger shall evaluate its effluent copper concentration trend, and if it is increasing, develop and begin implementation of additional measures to control copper discharges. The Discharger shall report on the progress and effectiveness of actions taken, together with a schedule for actions to be taken in the next 12 months.	With annual pollution prevention report due February 28 following notification

Task	Compliance Date
3. **Undertake Studies to Reduce Copper Pollutant Impact Uncertainties** The Discharger shall submit an updated study plan and schedule to conduct, or cause to be conducted, technical studies to investigate possible copper sediment toxicity and technical studies to investigate sublethal effects on salmonids. Specifically, the Discharger shall include the manner in which the above will be accomplished and describe the studies to be performed with an implementation schedule. To satisfy this requirement, the Discharger may collaborate and conduct these studies as a group.	Completed April 1, 2011
4. **Report Status of Copper Control Program** The Discharger shall submit an annual report documenting copper control program implementation and addressing the effectiveness of the actions taken, including any additional copper controls required by Task 2, above, together with a schedule for actions to be taken in the next 12 months. Additionally, the Discharger shall report the findings and results of the studies completed, planned, or in progress under Task 3. Regarding the Task 3 studies, dischargers may collaborate and provide this information in a single report to satisfy this requirement for an entire group.	With annual pollution prevention report due February 28 each year

c. Mass and Concentration Effluent Limit Adjustments

Prior to obtaining mass or concentration effluent limit adjustments for using recycled water, the Discharger shall submit a technical report that demonstrates such credits will not cause impairment of beneficial uses in the vicinity of its discharge, such as a zone of acute toxicity to aquatic life. The demonstration shall include, but not be limited to, an assessment of the results of whole effluent toxicity testing, and mass balance calculations that compare the as-discharged effluent concentrations (i.e., before effluent limit adjustments) to potential WQBELs for constituents for which effluent limit adjustments are sought. The report shall also include one or more examples of how the effluent limit adjustment calculations will be performed and reported based on the site-specific conditions of the Discharger. Following written approval of the technical report from the Executive Officer, this provision shall be considered satisfied.

d. Stormwater Pollution Prevention Plan and Annual Report

The Discharger shall submit an updated Stormwater Pollution Prevention Plan (SWPPP) acceptable to the Executive Officer by October 1 of each year. If the Discharger determines that it does not need to update the SWPPP, it shall submit a letter indicating that no revision is necessary and stating the last year it updated the SWPPP. The SWPPP shall comply with the requirements in the federal Standard Provisions (Attachment D).

The Discharger shall submit an annual stormwater report acceptable to the Executive Officer by July 1 of each year covering data for the previous wet weather season for the identified stormwater discharge points. The annual stormwater report shall include, at minimum:

i. a tabulated summary of all sampling results and a summary of visual observations taken during inspections;

ii. a comprehensive discussion of the compliance record and any corrective actions taken or planned to ensure compliance with WDRs; and

iii. a comprehensive discussion of source identification and control programs for total suspended solids.

VII. COMPLIANCE DETERMINATION

Compliance with effluent limitations for priority pollutants shall be determined using sample reporting protocols defined in Attachment A—Definitions, the MRP (Attachment E), Fact Sheet section VI, and the Regional Standard Provisions (Attachment G). For purposes of reporting and administrative enforcement by the Regional and State Water Boards, the Discharger shall be deemed out of compliance with effluent limitations if the concentration of the priority pollutant in the monitoring sample is greater than the effluent limitation and greater than or equal to the RL. Where intake credits are allowed, compliance will be determined as described in Fact Sheet section IV.C.4.k.(2).

ATTACHMENT A – DEFINITIONS

Arithmetic Mean (μ), also called the average, is the sum of measured values divided by the number of samples. For ambient water concentrations, the arithmetic mean is calculated as follows:

> Arithmetic mean = $\mu = \Sigma x / n$ where: Σx is the sum of the measured ambient water concentrations, and n is the number of samples.

Average Monthly Effluent Limitation (AMEL): the highest allowable average of daily discharges over a calendar month, calculated as the sum of all daily discharges measured during a calendar month divided by the number of daily discharges measured during that month.

Average Weekly Effluent Limitation (AWEL): the highest allowable average of daily discharges over a calendar week (Sunday through Saturday), calculated as the sum of all daily discharges measured during a calendar week divided by the number of daily discharges measured during that week.

Bioaccumulative pollutants are those substances taken up by an organism from its surrounding medium through gill membranes, epithelial tissue, or from food and subsequently concentrated and retained in the body of the organism.

Carcinogenic pollutants are substances that are known to cause cancer in living organisms.

Coefficient of Variation (*CV*) is a measure of the data variability and is calculated as the estimated standard deviation divided by the arithmetic mean of the observed values.

Daily Discharge: Daily Discharge is defined as either: (1) the total mass of the constituent discharged over the calendar day (12:00 am through 11:59 pm) or any 24-hour period that reasonably represents a calendar day for purposes of sampling (as specified in this Order), for a constituent with limitations expressed in units of mass or; (2) the unweighted arithmetic mean measurement of the constituent over the day for a constituent with limitations expressed in other units of measurement (e.g., concentration).

The daily discharge may be determined by the analytical results of a composite sample taken over the course of one day (a calendar day or other 24-hour period defined as a day) or by the arithmetic mean of analytical results from one or more grab samples taken over the course of the day.

For composite sampling, if 1 day is defined as a 24-hour period other than a calendar day, the analytical result for the 24-hour period will be considered as the result for the calendar day in which the 24-hour period ends.

Detected, but Not Quantified (DNQ) are those sample results less than the RL, but greater than or equal to the laboratory's MDL.

Dilution Credit is the amount of dilution granted to a discharge in the calculation of a water quality-based effluent limitation, based on the allowance of a specified mixing zone. It is calculated from the dilution ratio or determined through conducting a mixing zone study or modeling of the discharge and receiving water.

Effluent Concentration Allowance (ECA) is a value derived from the water quality criterion/objective, dilution credit, and ambient background concentration that is used, in conjunction with the coefficient of variation for the effluent monitoring data, to calculate a long-term average (LTA) discharge concentration. The ECA has the same meaning as wasteload allocation (WLA) as used in USEPA guidance (Technical Support Document For Water Quality-based Toxics Control, March 1991, second printing, EPA/505/2-90-001).

Enclosed Bays means indentations along the coast that enclose an area of oceanic water within distinct headlands or harbor works. Enclosed bays include all bays where the narrowest distance between the headlands or outermost harbor works is less than 75 percent of the greatest dimension of the enclosed portion of the bay. Enclosed bays include, but are not limited to, Humboldt Bay, Bodega Harbor, Tomales Bay, Drake's Estero, San Francisco Bay, Morro Bay, Los Angeles-Long Beach Harbor, Upper and Lower Newport Bay, Mission Bay, and San Diego Bay. Enclosed bays do not include inland surface waters or ocean waters.

Estimated Chemical Concentration is the estimated chemical concentration that results from the confirmed detection of the substance by the analytical method below the ML value.

Estuaries means waters, including coastal lagoons, located at the mouths of streams that serve as areas of mixing for fresh and ocean waters. Coastal lagoons and mouths of streams that are temporarily separated from the ocean by sandbars shall be considered estuaries. Estuarine waters shall be considered to extend from a bay or the open ocean to a point upstream where there is no significant mixing of fresh water and seawater. Estuarine waters include, but are not limited to, the Sacramento-San Joaquin Delta, as defined in California Water Code section 12220, Suisun Bay, Carquinez Strait downstream to the Carquinez Bridge, and appropriate areas of the Smith, Mad, Eel, Noyo, Russian, Klamath, San Diego, and Otay rivers. Estuaries do not include inland surface waters or ocean waters.

Inland Surface Waters are all surface waters of the State that do not include the ocean, enclosed bays, or estuaries.

Instantaneous Maximum Effluent Limitation: the highest allowable value for any single grab sample or aliquot (i.e., each grab sample or aliquot is independently compared to the instantaneous maximum limitation).

Instantaneous Minimum Effluent Limitation: the lowest allowable value for any single grab sample or aliquot (i.e., each grab sample or aliquot is independently compared to the instantaneous minimum limitation).

Maximum Daily Effluent Limitation (MDEL) means the highest allowable daily discharge of a pollutant, over a calendar day (or 24-hour period). For pollutants with limitations expressed in units of mass, the daily discharge is calculated as the total mass of the pollutant discharged over the day. For pollutants with limitations expressed in other units of measurement, the daily discharge is calculated as the arithmetic mean measurement of the pollutant over the day.

Median is the middle measurement in a set of data. The median of a set of data is found by first arranging the measurements in order of magnitude (either increasing or decreasing order). If the number of measurements (n) is odd, then the median = $X_{(n+1)/2}$. If n is even, then the median = $(X_{n/2} + X_{(n/2)+1})/2$ (i.e., the midpoint between the $n/2$ and $n/2+1$).

Method Detection Limit (MDL) is the minimum concentration of a substance that can be measured and reported with 99 percent confidence that the analyte concentration is greater than zero, as defined in title 40 of the Code of Federal Regulations, Part 136, Attachment B, revised as of July 3, 1999.

Minimum Level (ML) is the concentration at which the entire analytical system must give a recognizable signal and acceptable calibration point. The ML is the concentration in a sample that is equivalent to the concentration of the lowest calibration standard analyzed by a specific analytical procedure, assuming that all the method specified sample weights, volumes, and processing steps have been followed.

Mixing Zone is a limited volume of receiving water that is allocated for mixing with a wastewater discharge where water quality criteria can be exceeded without causing adverse effects to the overall water body.

Not Detected (ND) are those sample results less than the laboratory's MDL.

Ocean Waters are the territorial marine waters of the State as defined by California law to the extent these waters are outside of enclosed bays, estuaries, and coastal lagoons. Discharges to ocean waters are regulated in accordance with the State Water Board's California Ocean Plan.

Persistent pollutants are substances for which degradation or decomposition in the environment is nonexistent or very slow.

Pollutant Minimization Program (PMP) means waste minimization and pollution prevention actions that include, but are not limited to, product substitution, waste stream recycling, alternative waste management methods, and education of the public and businesses. The goal of the PMP shall be to reduce all potential sources of a priority pollutant(s) through pollutant minimization (control) strategies, including pollution prevention measures as appropriate, to maintain the effluent concentration at or below the water quality-based effluent limitation. Pollution prevention measures may be particularly appropriate for persistent bioaccumulative priority pollutants where there is evidence that beneficial uses are being impacted. The Regional Water Board may consider cost effectiveness when establishing the requirements of a PMP. The completion and implementation of a Pollution Prevention Plan, if required pursuant to California Water Code section 13263.3(d), shall be considered to fulfill the PMP requirements.

Pollution Prevention means any action that causes a net reduction in the use or generation of a hazardous substance or other pollutant that is discharged into water and includes, but is not limited to, input change, operational improvement, production process change, and product reformulation (as defined in California Water Code section 13263.3). Pollution prevention does not include actions that merely shift a pollutant in wastewater from one environmental medium to another environmental medium, unless clear environmental benefits of such an approach are identified to the satisfaction of the State or Regional Water Board.

Reporting Level (RL) is the ML (and its associated analytical method) chosen by the Discharger for reporting and compliance determination from the MLs included in this Order. The MLs included in this Order correspond to approved analytical methods for reporting a sample result that are selected by the Regional Water Board either from SIP Appendix 4 in accordance with SIP section 2.4.2 or established in accordance with SIP section 2.4.3. The ML is based on the proper application of method-based

analytical procedures for sample preparation and the absence of any matrix interferences. Other factors may be applied to the ML depending on the specific sample preparation steps employed. For example, the treatment typically applied in cases where there are matrix-effects is to dilute the sample or sample aliquot by a factor of ten. In such cases, this additional factor must be applied to the ML in the computation of the RL.

Satellite Collection System is the portion, if any, of a sanitary sewer system owned or operated by a different public agency than the agency that owns and operates the wastewater treatment facility that a sanitary sewer system is tributary to.

Source of Drinking Water is any water designated as municipal or domestic supply (MUN) in a Regional Water Board Basin Plan.

Standard Deviation (σ) is a measure of variability that is calculated as follows:

$$\sigma = (\sum[(x - \mu)^2]/(n - 1))^{0.5}$$

where:
x is the observed value;
μ is the arithmetic mean of the observed values; and
n is the number of samples.

Toxicity Reduction Evaluation (TRE) is a study conducted in a step-wise process designed to identify the causative agents of effluent or ambient toxicity, isolate the sources of toxicity, evaluate the effectiveness of toxicity control options, and then confirm the reduction in toxicity. The first steps of the TRE consist of the collection of data relevant to the toxicity, including additional toxicity testing, and an evaluation of facility operations and maintenance practices, and best management practices. A Toxicity Identification Evaluation (TIE) may be required as part of the TRE, if appropriate. (A TIE is a set of procedures to identify the specific chemical(s) responsible for toxicity. These procedures are performed in three phases (characterization, identification, and confirmation) using aquatic organism toxicity tests.)

ATTACHMENT B – MAP

ATTACHMENT C – PROCESS FLOW DIAGRAM

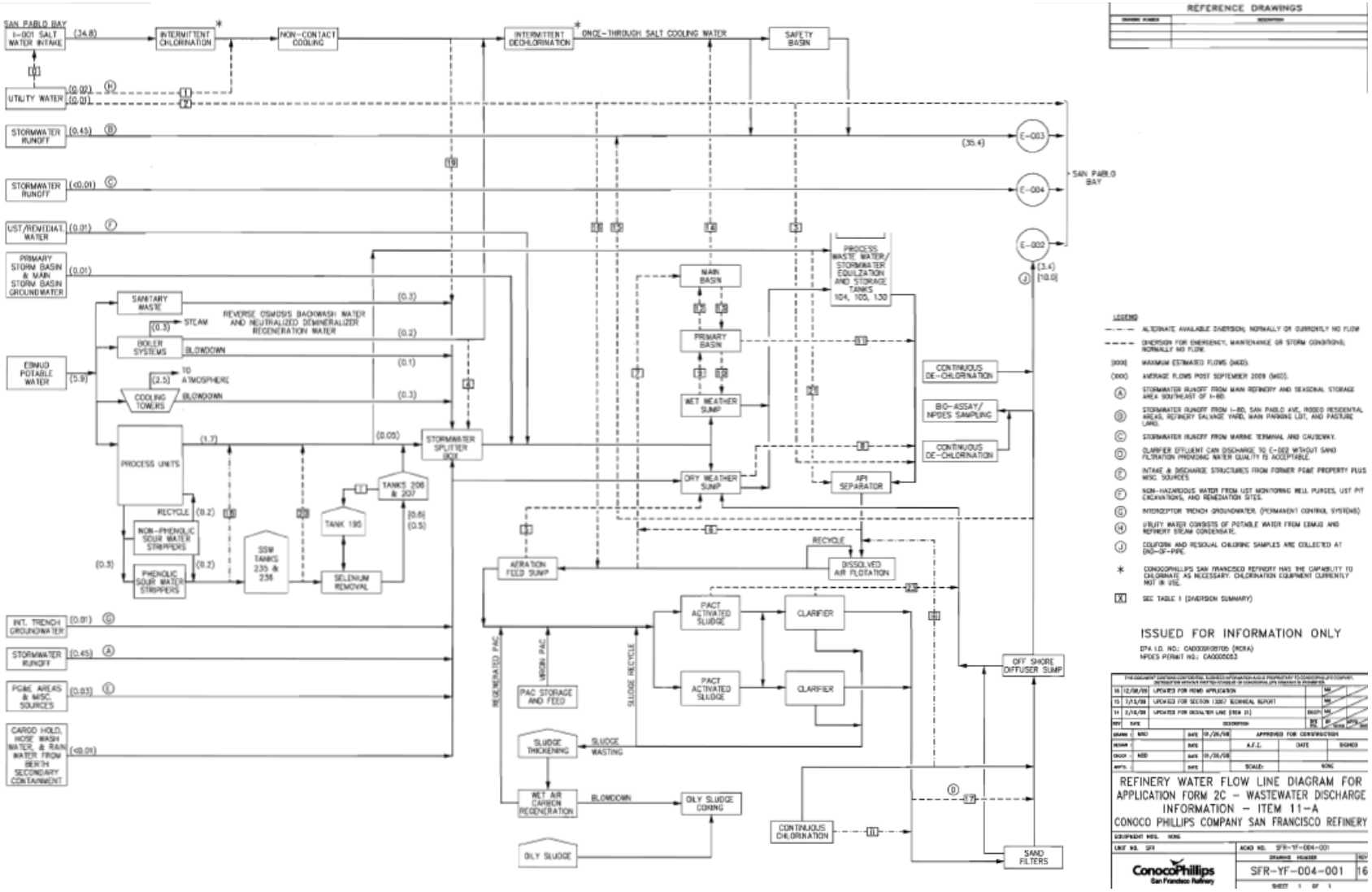

FIGURE 2: FLOW PROCESS DIAGRAM – TABLE 1 (DIVERSION SUMMARY)

Diversion for emergency, maintenance or storm conditions – normally no flow – flow data in gallons per minute (GPM)

	From	Conditions	Annual Freq.	Est. Flow	Design Flow	To
0	Utility Water System	Periodic cleaning of SWIS screens	52	125	none	San Pablo Bay
1		Saltwater pump failure or maintenance (supplemental cooling)	0 - 10	250-750	varies	E-003
NA		Process Area fire monitor / hydrant flow testing (all locations)	240	500	none	DWS
2		MTC fire monitor / hydrant flow testing (10 locations)	40	500	none	San Pablo Bay
2		Wash off boom boat	0 - 50	25	none	
2		Steam condensate drips from lines @ MTC	ongoing	0.005	none	
2		Algae removal from boat launch ramp	0 - 2	10	none	
3	SSW	Utility Carrier Water for pH control	As needed	30-50	none	API inlet
4	Neut. demin. backwash	Line plugged, value failure @ U240 / SPP, or salt water outage	0 - 1	0 250	none	Sewer System
5	Aeration feed sump	AFS pump failure or HC contamination	0 - 4	~2,000	~7,500	DWS
6	API out	DAF Failure	Never used	~2,000	~7,500	Main Basin
7	DAF out	Equalization Tanks full with no discharge to the Bay	Never used	~2,000	~7,500	Main Basin
8	DWS	Line to equalization tanks is not available / out of service	Never used	~2,000	3,600	API In
9	WWS	EQ tanks full, rainfall > pumping capacity, power outage or WWS pump / level control failure	0 - 1	~100,000	~100,000	Primary Basin
10	Primary Basin	Pump out Primary Basin after diversion (gravity flow)	0 - 1	15-72,000	72,000	WWS
11		Return line to WWS not available / out of service	Never used	~5,000	~5,000	API In
12		Primary Basin is full – overflow to Main Basin	1/10	~100,000	~100,000	Main Basin
13	Main Basin	Pump out Main Basin after diversion (gravity drain)	1/ 10	0-1,600	1,600	Primary Basin
14		Main Basin is full – overflowing to safety Basin	1/25	~100,000	~100,000	Safety Basin
15	OSD Line	OSD Line failure – U100 discharge bypassed to E-003	Never used	~2,000	~7,500	E003
16	Utility Water	Hi-temperature control to prevent Bio-plant failure	0 - 3	500	none	Aeration Sump
17	Clarifier out	Providing water quality is acceptable	0 - 2	~5,000	~7500	OSD sump
18	SW Strippers	Wastewater does not require treatment @ SRP	0 - 1	0 - 150	none	Sewer System
19	Saltwater dist. system	Maintenance or equipment failure	0 - 5	0 - 100	none	Sewer System
20	Tanks 235 / 236	Wastewater does not require treatment @ SRP	0 - 1	0 - 150	none	Sewer System
21	Desalter (BWON)	Equalization tank maintenance - brine to API	0 - 1	0 - 50	50	API
NA	Utility Water	Mutual Aid Fire Training *	12-15	1,000-5,000	none	Vegetated areas

* Details available in SWPPP

Alternate available diversion - normally or currently no flow

	From	Conditions	Annual Freq.	Est. Flow	Design Flow	To
i	Tanks 206 / 207	Off spec proving tank (Se or Cu)	0 - 2	500	500	Tank 195
ii	Metered hypochlorite	Degrease / clean media	0 - 4	metered	65	Media filters
iii		H2S control in DAF / supplemental disinfection	TBD	TBD	TBD	DAF Inlet

Updated 2/23/2010

ATTACHMENT D – FEDERAL STANDARD PROVISIONS

I. STANDARD PROVISIONS – PERMIT COMPLIANCE

A. Duty to Comply

1. The Discharger must comply with all of the conditions of this Order. Any noncompliance constitutes a violation of the Clean Water Act (CWA) and the California Water Code and is grounds for enforcement action, for permit termination, revocation and reissuance, or modification; or denial of a permit renewal application. (40 C.F.R. § 122.41(a).)

2. The Discharger shall comply with effluent standards or prohibitions established under section 307(a) of the CWA for toxic pollutants and with standards for sewage sludge use or disposal established under section 405(d) of the CWA within the time provided in the regulations that establish these standards or prohibitions, even if this Order has not yet been modified to incorporate the requirement. (40 C.F.R. § 122.41(a)(1).)

B. Need to Halt or Reduce Activity Not a Defense

It shall not be a defense for a Discharger in an enforcement action that it would have been necessary to halt or reduce the permitted activity in order to maintain compliance with the conditions of this Order. (40 C.F.R. § 122.41(c).)

C. Duty to Mitigate

The Discharger shall take all reasonable steps to minimize or prevent any discharge or sludge use or disposal in violation of this Order that has a reasonable likelihood of adversely affecting human health or the environment. (40 C.F.R. § 122.41(d).)

D. Proper Operation and Maintenance

The Discharger shall at all times properly operate and maintain all facilities and systems of treatment and control (and related appurtenances) which are installed or used by the Discharger to achieve compliance with the conditions of this Order. Proper operation and maintenance also includes adequate laboratory controls and appropriate quality assurance procedures. This provision requires the operation of backup or auxiliary facilities or similar systems that are installed by a Discharger only when necessary to achieve compliance with the conditions of this Order (40 C.F.R. § 122.41(e)).

E. Property Rights

1. This Order does not convey any property rights of any sort or any exclusive privileges. (40 C.F.R. § 122.41(g).)

2. The issuance of this Order does not authorize any injury to persons or property or invasion of other private rights, or any infringement of State or local law or regulations. (40 C.F.R. § 122.5(c).)

F. Inspection and Entry

The Discharger shall allow the Regional Water Board, State Water Board, United States Environmental Protection Agency (USEPA), or their authorized representatives (including an authorized contractor acting as their representative), upon the presentation of credentials and other documents, as may be required by law, to (40 C.F.R. § 122.41(i); Wat. Code, § 13383):

1. Enter upon the Discharger's premises where a regulated facility or activity is located or conducted, or where records are kept under the conditions of this Order (40 C.F.R. § 122.41(i)(1));

2. Have access to and copy, at reasonable times, any records that must be kept under the conditions of this Order (40 C.F.R. § 122.41(i)(2));

3. Inspect and photograph, at reasonable times, any facilities, equipment (including monitoring and control equipment), practices, or operations regulated or required under this Order (40 C.F.R. § 122.41(i)(3)); and

4. Sample or monitor, at reasonable times, for the purposes of assuring Order compliance or as otherwise authorized by the CWA or the Water Code, any substances or parameters at any location. (40 C.F.R. § 122.41(i)(4).)

G. Bypass

1. Definitions

a. "Bypass" means the intentional diversion of waste streams from any portion of a treatment facility. (40 C.F.R. § 122.41(m)(1)(i).)

b. "Severe property damage" means substantial physical damage to property, damage to the treatment facilities, which causes them to become inoperable, or substantial and permanent loss of natural resources that can reasonably be expected to occur in the absence of a bypass. Severe property damage does not mean economic loss caused by delays in production. (40 C.F.R. § 122.41(m)(1)(ii).)

2. Bypass not exceeding limitations. The Discharger may allow any bypass to occur which does not cause exceedances of effluent limitations, but only if it is for essential maintenance to assure efficient operation. These bypasses are not subject to the provisions listed in Standard Provisions – Permit Compliance I.G.3, I.G.4, and I.G.5 below. (40 C.F.R. § 122.41(m)(2).)

3. Prohibition of bypass. Bypass is prohibited, and the Regional Water Board may take enforcement action against a Discharger for bypass, unless (40 C.F.R. § 122.41(m)(4)(i)):

a. Bypass was unavoidable to prevent loss of life, personal injury, or severe property damage (40 C.F.R. § 122.41(m)(4)(i)(A));

b. There were no feasible alternatives to the bypass, such as the use of auxiliary treatment facilities, retention of untreated wastes, or maintenance during normal periods of equipment downtime. This condition is not satisfied if adequate back-up equipment should have been installed in the exercise of reasonable engineering judgment to prevent

a bypass that occurred during normal periods of equipment downtime or preventive maintenance (40 C.F.R. § 122.41(m)(4)(i)(B)); and

c. The Discharger submitted notice to the Regional Water Board as required under Standard Provisions – Permit Compliance I.G.5 below. (40 C.F.R. § 122.41(m)(4)(i)(C).)

4. The Regional Water Board may approve an anticipated bypass, after considering its adverse effects, if the Regional Water Board determines that it will meet the three conditions listed in Standard Provisions – Permit Compliance I.G.3 above. (40 C.F.R. § 122.41(m)(4)(ii).)

5. Notice

a. Anticipated bypass. If the Discharger knows in advance of the need for a bypass, it shall submit a notice, if possible at least 10 days before the date of the bypass. (40 C.F.R. § 122.41(m)(3)(i).)

b. Unanticipated bypass. The Discharger shall submit notice of an unanticipated bypass as required in Standard Provisions - Reporting V.E below (24-hour notice). (40 C.F.R. § 122.41(m)(3)(ii).)

H. Upset

Upset means an exceptional incident in which there is unintentional and temporary noncompliance with technology based permit effluent limitations because of factors beyond the reasonable control of the Discharger. An upset does not include noncompliance to the extent caused by operational error, improperly designed treatment facilities, inadequate treatment facilities, lack of preventive maintenance, or careless or improper operation. (40 C.F.R. § 122.41(n)(1).)

1. Effect of an upset. An upset constitutes an affirmative defense to an action brought for noncompliance with such technology based permit effluent limitations if the requirements of Standard Provisions – Permit Compliance I.H.2 below are met. No determination made during administrative review of claims that noncompliance was caused by upset, and before an action for noncompliance, is final administrative action subject to judicial review. (40 C.F.R. § 122.41(n)(2).).

2. Conditions necessary for a demonstration of upset. A Discharger who wishes to establish the affirmative defense of upset shall demonstrate, through properly signed, contemporaneous operating logs or other relevant evidence that (40 C.F.R. § 122.41(n)(3)):

a. An upset occurred and that the Discharger can identify the cause(s) of the upset (40 C.F.R. § 122.41(n)(3)(i));

b. The permitted facility was, at the time, being properly operated (40 C.F.R. § 122.41(n)(3)(ii));

c. The Discharger submitted notice of the upset as required in Standard Provisions – Reporting V.E.2.b below (24-hour notice) (40 C.F.R. § 122.41(n)(3)(iii)); and

d. The Discharger complied with any remedial measures required under Standard Provisions – Permit Compliance I.C above. (40 C.F.R. § 122.41(n)(3)(iv).)

3. Burden of proof. In any enforcement proceeding, the Discharger seeking to establish the occurrence of an upset has the burden of proof. (40 C.F.R. § 122.41(n)(4).)

II. STANDARD PROVISIONS – PERMIT ACTION

A. General

This Order may be modified, revoked and reissued, or terminated for cause. The filing of a request by the Discharger for modification, revocation and reissuance, or termination, or a notification of planned changes or anticipated noncompliance does not stay any Order condition. (40 C.F.R. § 122.41(f).)

B. Duty to Reapply

If the Discharger wishes to continue an activity regulated by this Order after the expiration date of this Order, the Discharger must apply for and obtain a new permit. (40 C.F.R. § 122.41(b).)

C. Transfers

This Order is not transferable to any person except after notice to the Regional Water Board. The Regional Water Board may require modification or revocation and reissuance of this Order to change the name of the Discharger and incorporate such other requirements as may be necessary under the CWA and the Water Code. (40 C.F.R. § 122.41(l)(3); § 122.61.)

III. STANDARD PROVISIONS – MONITORING

A. Samples and measurements taken for the purpose of monitoring shall be representative of the monitored activity. (40 C.F.R. § 122.41(j)(1).)

B. Monitoring results must be conducted according to test procedures under Part 136 or, in the case of sludge use or disposal, approved under Part 136 unless otherwise specified in Part 503 unless other test procedures have been specified in this Order. (40 C.F.R. § 122.41(j)(4); § 122.44(i)(1)(iv).)

IV. STANDARD PROVISIONS – RECORDS

A. Except for records of monitoring information required by this Order related to the Discharger's sewage sludge use and disposal activities, which shall be retained for a period of at least five years (or longer as required by Part 503), the Discharger shall retain records of all monitoring information, including all calibration and maintenance records and all original strip chart recordings for continuous monitoring instrumentation, copies of all reports required by this Order, and records of all data used to complete the application for this Order, for a period of at least three (3) years from the date of the sample, measurement, report or application. This period may be extended by request of the Regional Water Board Executive Officer at any time. (40 C.F.R. § 122.41(j)(2).)

B. Records of monitoring information shall include:

1. The date, exact place, and time of sampling or measurements (40 C.F.R. § 122.41(j)(3)(i));

2. The individual(s) who performed the sampling or measurements (40 C.F.R. § 122.41(j)(3)(ii));

3. The date(s) analyses were performed (40 C.F.R. § 122.41(j)(3)(iii));

4. The individual(s) who performed the analyses (40 C.F.R. § 122.41(j)(3)(iv));

5. The analytical techniques or methods used (40 C.F.R. § 122.41(j)(3)(v)); and

6. The results of such analyses. (40 C.F.R. § 122.41(j)(3)(vi).)

C. Claims of confidentiality for the following information will be denied (40 C.F.R. § 122.7(b)):

1. The name and address of any permit applicant or Discharger (40 C.F.R. § 122.7(b)(1)); and

2. Permit applications and attachments, permits and effluent data. (40 C.F.R. § 122.7(b)(2).)

V. STANDARD PROVISIONS – REPORTING

A. Duty to Provide Information

The Discharger shall furnish to the Regional Water Board, State Water Board, or USEPA within a reasonable time, any information which the Regional Water Board, State Water Board, or USEPA may request to determine whether cause exists for modifying, revoking and reissuing, or terminating this Order or to determine compliance with this Order. Upon request, the Discharger shall also furnish to the Regional Water Board, State Water Board, or USEPA copies of records required to be kept by this Order. (40 C.F.R. § 122.41(h); Wat. Code, § 13267.)

B. Signatory and Certification Requirements

1. All applications, reports, or information submitted to the Regional Water Board, State Water Board, or USEPA shall be signed and certified in accordance with Standard Provisions – Reporting V.B.2, V.B.3, V.B.4, and V.B.5 below. (40 C.F.R. § 122.41(k))

2. All permit applications shall be signed by a responsible corporate officer. For purposes of this provision, a responsible corporate officer means: (i) A president, secretary, treasurer, or vice-president of the corporation in charge of a principal business function, or any other person who performs similar policy- or decision-making functions for the corporation, or (ii) the manager of one or more manufacturing, production, or operating facilities, provided, the manager is authorized to make management decisions which govern the operation of the regulated facility including having the explicit or implicit duty of making major capital investment recommendations, and initiating and directing other comprehensive measures to assure ling term environmental compliance with environmental laws and regulations; the manager can ensure that the necessary systems are established or actions taken to gather complete and accurate information for permit application requirements; and where authority to sign documents has been assigned or delegated to the manager in accordance with corporate procedures. (40 C.F.R. § 122.22(a)(1))

3. All reports required by this Order and other information requested by the Regional Water Board, State Water Board, or USEPA shall be signed by a person described in Standard Provisions – Reporting V.B.2 above, or by a duly authorized representative of that person. A person is a duly authorized representative only if:

a. The authorization is made in writing by a person described in Standard Provisions – Reporting V.B.2 above (40 C.F.R. § 122.22(b)(1));

b. The authorization specifies either an individual or a position having responsibility for the overall operation of the regulated facility or activity such as the position of plant manager, operator of a well or a well field, superintendent, position of equivalent responsibility, or an individual or position having overall responsibility for environmental matters for the company. (A duly authorized representative may thus be either a named individual or any individual occupying a named position.) (40 C.F.R. § 122.22(b)(2)); and

c. The written authorization is submitted to the Regional Water Board and State Water Board. (40 C.F.R. § 122.22(b)(3).)

4. If an authorization under Standard Provisions – Reporting V.B.3 above is no longer accurate because a different individual or position has responsibility for the overall operation of the facility, a new authorization satisfying the requirements of Standard Provisions – Reporting V.B.3 above must be submitted to the Regional Water Board and State Water Board prior to or together with any reports, information, or applications, to be signed by an authorized representative. (40 C.F.R. § 122.22(c).)

5. Any person signing a document under Standard Provisions – Reporting V.B.2 or V.B.3 above shall make the following certification:

"I certify under penalty of law that this document and all attachments were prepared under my direction or supervision in accordance with a system designed to assure that qualified personnel properly gather and evaluate the information submitted. Based on my inquiry of the person or persons who manage the system or those persons directly responsible for gathering the information, the information submitted is, to the best of my knowledge and belief, true, accurate, and complete. I am aware that there are significant penalties for submitting false information, including the possibility of fine and imprisonment for knowing violations." (40 C.F.R. § 122.22(d).)

C. Monitoring Reports

1. Monitoring results shall be reported at the intervals specified in the Monitoring and Reporting Program (Attachment E) in this Order. (40 C.F.R. § 122.22(l)(4).)

2. Monitoring results must be reported on a Discharge Monitoring Report (DMR) form or forms provided or specified by the Regional Water Board or State Water Board for reporting results of monitoring of sludge use or disposal practices. (40 C.F.R. § 122.41(l)(4)(i).)

3. If the Discharger monitors any pollutant more frequently than required by this Order using test procedures approved under Part 136 or, in the case of sludge use or disposal, approved under Part 136 unless otherwise specified in Part 503, or as specified in this Order, the results of this monitoring shall be included in the calculation and reporting of the data submitted in the DMR or sludge reporting form specified by the Regional Water Board. (40 C.F.R. § 122.41(l)(4)(ii).)

4. Calculations for all limitations, which require averaging of measurements, shall utilize an arithmetic mean unless otherwise specified in this Order. (40 C.F.R. § 122.41(l)(4)(iii).)

D. Compliance Schedules

Reports of compliance or noncompliance with, or any progress reports on, interim and final requirements in any compliance schedule of this Order, shall be submitted no later than 14 days following each schedule date. (40 C.F.R. § 122.41(l)(5).)

E. Twenty-Four Hour Reporting

1. The Discharger shall report any noncompliance that may endanger health or the environment. Any information shall be provided orally within 24 hours from the time the Discharger becomes aware of the circumstances. A written submission shall also be provided within five (5) days of the time the Discharger becomes aware of the circumstances. The written submission shall contain a description of the noncompliance and its cause; the period of noncompliance, including exact dates and times, and if the noncompliance has not been corrected, the anticipated time it is expected to continue; and steps taken or planned to reduce, eliminate, and prevent reoccurrence of the noncompliance. (40 C.F.R. § 122.41(l)(6)(i).)

2. The following shall be included as information that must be reported within 24 hours under this paragraph (40 C.F.R. § 122.41(l)(6)(ii)):

   a. Any unanticipated bypass that exceeds any effluent limitation in this Order. (40 C.F.R. § 122.41(l)(6)(ii)(A).)

   b. Any upset that exceeds any effluent limitation in this Order. (40 C.F.R. § 122.41(l)(6)(ii)(B).)

3. The Regional Water Board may waive the above-required written report under this provision on a case-by-case basis if an oral report has been received within 24 hours. (40 C.F.R. § 122.41(l)(6)(iii).)

F. Planned Changes

The Discharger shall give notice to the Regional Water Board as soon as possible of any planned physical alterations or additions to the permitted facility. Notice is required under this provision only when (40 C.F.R. § 122.41(l)(1)):

1. The alteration or addition to a permitted facility may meet one of the criteria for determining whether a facility is a new source in section 122.29(b) (40 C.F.R. § 122.41(l)(1)(i)); or

2. The alteration or addition could significantly change the nature or increase the quantity of pollutants discharged. This notification applies to pollutants that are not subject to effluent limitations in this Order. (40 C.F.R. § 122.41(l)(1)(ii).)

3. The alteration or addition results in a significant change in the Discharger's sludge use or disposal practices, and such alteration, addition, or change may justify the application of permit conditions that are different from or absent in the existing permit, including

notification of additional use or disposal sites not reported during the permit application process or not reported pursuant to an approved land application plan. (40 C.F.R.§ 122.41(l)(1)(iii).)

G. Anticipated Noncompliance

The Discharger shall give advance notice to the Regional Water Board or State Water Board of any planned changes in the permitted facility or activity that may result in noncompliance with General Order requirements. (40 C.F.R. § 122.41(l)(2).)

H. Other Noncompliance

The Discharger shall report all instances of noncompliance not reported under Standard Provisions – Reporting V.C, V.D, and V.E above at the time monitoring reports are submitted. The reports shall contain the information listed in Standard Provision – Reporting V.E above. (40 C.F.R. § 122.41(l)(7).)

I. Other Information

When the Discharger becomes aware that it failed to submit any relevant facts in a permit application, or submitted incorrect information in a permit application or in any report to the Regional Water Board, State Water Board, or USEPA, the Discharger shall promptly submit such facts or information. (40 C.F.R. § 122.41(l)(8).)

VI. STANDARD PROVISIONS – ENFORCEMENT

A. The Regional Water Board is authorized to enforce the terms of this Order under several provisions of the Water Code, including, but not limited to, sections 13385, 13386, and 13387.

VII. ADDITIONAL PROVISIONS – NOTIFICATION LEVELS

A. Non-Municipal Facilities

Existing manufacturing, commercial, mining, and silvicultural Dischargers shall notify the Regional Water Board as soon as they know or have reason to believe (40 C.F.R. § 122.42(a)):

1. That any activity has occurred or will occur that would result in the discharge, on a routine or frequent basis, of any toxic pollutant that is not limited in this Order, if that discharge will exceed the highest of the following "notification levels" (40 C.F.R. § 122.42(a)(1)):

a. 100 micrograms per liter (µg/L) (40 C.F.R. § 122.42(a)(1)(i));

b. 200 µg/L for acrolein and acrylonitrile; 500 µg/L for 2,4-dinitrophenol and 2-methyl-4,6-dinitrophenol; and 1 milligram per liter (mg/L) for antimony (40 C.F.R. § 122.42(a)(1)(ii));

c. Five (5) times the maximum concentration value reported for that pollutant in the Report of Waste Discharge (40 C.F.R. § 122.42(a)(1)(iii)); or

d. The level established by the Regional Water Board in accordance with section 122.44(f). (40 C.F.R. § 122.42(a)(1)(iv).)

2. That any activity has occurred or will occur that would result in the discharge, on a non-routine or infrequent basis, of any toxic pollutant that is not limited in this Order, if that discharge will exceed the highest of the following "notification levels" (40 C.F.R. § 122.42(a)(2)):

a. 500 micrograms per liter (µg/L) (40 C.F.R. § 122.42(a)(2)(i));

b. 1 milligram per liter (mg/L) for antimony (40 C.F.R. § 122.42(a)(2)(ii));

c. Ten (10) times the maximum concentration value reported for that pollutant in the Report of Waste Discharge (40 C.F.R. § 122.42(a)(2)(iii)); or

d. The level established by the Regional Water Board in accordance with section 122.44(f). (40 C.F.R. § 122.42(a)(2)(iv).)

ATTACHMENT E – MONITORING AND REPORTING PROGRAM

Table of Contents

I. General Monitoring Provisions....E-2
II. Monitoring Locations....E-2
III. Influent Monitoring Requirements....E-3
IV. Effluent Monitoring Requirements....E-4
V. Whole Effluent Toxicity Testing....E-7
VI. Receiving Water Monitoring Requirements....E-10
VII. Legend for MRP Tables....E-11
VIII. Reporting Requirements....E-11
IX. Bypass Requirements....E-14

Tables

Table E-1. Monitoring Station Locations....E-2
Table E-2. Influent Monitoring at INF-001....E-3
Table E-3. Influent Monitoring at INF-002....E-3
Table E-4. Effluent Monitoring at EFF-002....E-4
Table E-5. Effluent Monitoring at EFF-003A....E-6
Table E-6. Effluent Monitoring at EFF-003B....E-6
Table E-7. Stormwater Monitoring at EFF-004....E-7
Table E-8. Receiving Water Monitoring at RSW-002 and RSW-003....E-10
Table E-9. Monitoring Periods and Reporting Schedule....E-12

ATTACHMENT E – MONITORING AND REPORTING PROGRAM (MRP)

40 CFR 122.48 requires that all National Pollution Discharge Elimination System (NPDES) permits specify monitoring and reporting requirements. California Water Code (CWC) sections 13267 and 13383 also authorize the Regional Water Quality Control Board (Regional Water Board) to require technical and monitoring reports. This MRP establishes monitoring and reporting requirements that implement federal and California regulations.

I. GENERAL MONITORING PROVISIONS

A. The Discharger shall comply with this MRP. The Executive Officer may amend this MRP pursuant to 40 CFR 122.62, 122.63, and 124.5. If any discrepancies exist between the MRP and the Regional Standard Provisions, the MRP shall prevail.

B. The Discharger shall conduct all monitoring in accordance with Attachment D, section III, as supplemented by Attachment G of this Order. Equivalent test methods must be more sensitive than those specified in 40 CFR 136, must be specified in the permit, and must be approved for use by the Executive Officer, following consultation with the State Water Board Quality Assurance Program.

II. MONITORING LOCATIONS

The Discharger shall monitor at the following locations to demonstrate compliance with the effluent limitations, discharge specifications, and other requirements in this Order.

Table E-1. Monitoring Station Locations

Type of Sampling Location	Monitoring Location Name	Monitoring Location Description
Influent	INF-001	At any point in the saltwater pump intake that delivers San Pablo Bay water to the Facility, prior to any treatment or use for cooling or processing.
Influent	INF-002	At any point in the pipe that delivers only recycled water to the facility, upstream of any water treatment unit, blending point, or point of use.
Effluent	EFF-002	At any point in the outfall from the treatment facilities to Discharge Point 002, at which all wastewaters tributary to the outfall are present.
Effluent	EFF-003A	At any point in the outfall for Discharge Point 003 between the point of discharge and the point where all wastes tributary thereto are present.
Effluent	EFF-003B	At any point in the outfall for Discharge Point 003 that includes once-through cooling water and neutralized demineralizer wastewaters but does not include the inflow of stormwater runoff for the purpose of priority pollutant monitoring such that the sample is representative of once-through cooling water.
Effluent	EFF-004	At a point in each of the three source areas (may be composited) resulting in the discharge from Discharge Point 004, not more than 5 feet from the point(s) of discharge. Exact sampling point for each discharge area shall be determined at the time of sampling.
Receiving Water	RSW-002	At a point in San Pablo Bay, located no more than 200 feet over the geometric center of the deepwater diffusers for Discharge Point 002.
Receiving Water	RSW-003	At a point in San Pablo Bay, located not more than 1,000 feet west of Discharge Point 003, where representative ambient temperature and receiving water quality can be measured.

Type of Sampling Location	Monitoring Location Name	Monitoring Location Description
Rainfall	R-1	The nearest official National Weather Service rainfall station, the Discharger's Laboratory rain gauge, or another station acceptable to the Executive Officer.

III. INFLUENT MONITORING REQUIREMENTS

The Discharger shall monitor the once-through water cooling water intake at Monitoring Location INF-001 as follows:

Table E-2. Influent Monitoring at INF-001

Parameter	Units	Sample Type	Minimum Sampling Frequency	Required Analytical Test Method
Flow Rate [2]	MGD	Continuous	1/Day	[1]
Copper, Total Recoverable	µg/L	Grab/C-24	1/Month	[1]
Nickel, Total Recoverable	µg/L	Grab/C-24	1/Month	[1]
Zinc, Total Recoverable	µg/L	Grab/C-24	1/Month	[1]
Dioxin-TEQ	pg/L	Grab/C-24	2/Year	[1]
TOC	mg/L	Grab/C-24	1/Month	[1]

[1] Pollutants shall be analyzed using the analytical methods described in 40 CFR Part 136.

[2] For influent flows, the following information shall also be monitored and reported in the monthly SMRs:

a. Daily Total Flow Volume (million gallons, MG)
b. Average Daily Flow (million gallons per day, MGD)
c. Maximum Daily Flow (MGD)
d. Minimum Daily Flow (MGD)

Monitoring at I-002 is not required unless the Discharger has begun a wastewater recycling program. Monitoring at I-002 is also not required if the Discharger chooses to forgo effluent limit credits.

Table E-3. Influent Monitoring at INF-002

Parameter	Units	Sample Type	Minimum Sampling Frequency	Required Analytical Test Method
Recycled Water Flow Rate [2]	MGD	Continuous	1/Day	[1]
Copper	µg/L	C-24	1/Week	[1]
Selenium	µg/L	C-24	1/Week	[1]
Benzo(a)Pyrene	µg/L	Grab	2/Year	[4]
Benzo(b)Fluoranthene	µg/L	Grab	2/Year	[4]
Bis(2-Ethylhexyl)Phthalate	µg/L	Grab	2/Year	[4]
Chrysene	µg/L	Grab	2/Year	[4]
Dibenzo(a,h)Anthracene	µg/L	Grab	2/Year	[4]
Indeno(1,2,3-cd)Pyrene	µg/L	Grab	2/Year	[4]
Dichlorobromomethane	µg/L	Grab	2/Year	[1]

Parameter	Units	Sample Type	Minimum Sampling Frequency	Required Analytical Test Method
Total PAHs[5]	µg/L	Grab	2/Year	[1]
Ammonia Nitrogen, Total (as N)	mg/L	Grab	1/Month	[1]

[1] Pollutants shall be analyzed using the analytical methods described in 40 CFR Part 136.

[2] For influent recycled water flows, the following information shall also be monitored and reported in the monthly SMRs:

a. Daily Total Flow Volume (million gallons, MG)
b. Average Daily Flow (million gallons per day, MGD)
c. Maximum Daily Flow (MGD)
d. Minimum Daily Flow (MGD)

[3] Chlorinated dibenzodioxins and chlorinated dibenzofurans shall be analyzed using the latest version of USEPA Method 1613. The Discharger shall collect 4-liter samples to lower the detection limits to the greatest extent practicable. Alternative methods of analysis must be approved by the Executive Officer.

[4] The latest versions of USEPA Methods 624 (or 8240) and 625 (or 8270) shall be used.

[5] When calculating total PAHs, the Discharger shall set individual PAH concentrations below minimum levels (MLs) to zero.

IV. EFFLUENT MONITORING REQUIREMENTS

A. Discharge Point 002

The Discharger shall monitor Discharge Point 002 (treated effluent) at Monitoring Location EFF-002 as follows:

Table E-4. Effluent Monitoring at EFF-002

Parameter	Units	Sample Type	Minimum Sampling Frequency	Required Analytical Test Method
Flow Rate [1]	MGD	Continuous	1/Day	[2]
pH [3]	s.u.	Continuous	Continuous	[2]
Temperature	°F	Continuous	Continuous	[2]
Total Coliform Bacteria	MPN / 100 mL	Grab	1/Week	[2]
Enterococcus Bacteria	MPN / 100 mL	Grab	1/Quarter	[2]
Chlorine, Total Residual	mg/L	Grab	1/Day	[2]
BOD_5	mg/L	C-24	1/Month	[2]
	lbs/day	C-24	1/Month	[2]
COD	mg/L	C-24	1/Month	[2]
	lbs/day	C-24	1/Month	[2]
TSS	mg/L	C-24	1/Month	[2]
	lbs/day	C-24	1/Month	[2]
Oil and Grease[4]	mg/L	C-24	1/Month	[2]
	lbs/day	C-24	1/Month	[2]
Phenolic Compounds, Total	mg/l	Grab	1/Month	[2]
	lbs/day	Grab	1/Month	[2]

Parameter	Units	Sample Type	Minimum Sampling Frequency	Required Analytical Test Method
Chromium, Total Recoverable [5]	µg/L	C-24	1/Month	[2]
	lbs/day	C-24	1/Month	[2]
Chromium (VI)	µg/L	C-24	1/Month	[2]
	lbs/day	C-24	1/Month	[2]
Sulfide, Total	mg/L	Grab	1/Month	[2],[6]
	lbs/day	Grab	1/Month	[2],[6]
Ammonia Nitrogen, Total (as N)	mg/L	Grab	1/Month	[2]
	lbs/day	Grab	1/Month	[2]
Acute Toxicity	% Survival	C-24	1/Week	[7]
Chronic Toxicity	TU_c	C-24	2/Year	[8]
Copper, Total Recoverable	µg/L	C-24	1/Week	[2]
Selenium	µg/L	C-24	1/Week	[9]
Dichlorobromomethane	µg/L	Grab	2/Year	[2]
Benzo(a)Pyrene	µg/L	Grab	2/Year	[10]
Benzo(b)Fluoranthene	µg/L	Grab	2/Year	[10]
Chrysene	µg/L	Grab	2/Year	[10]
Bis(2-Ethylhexyl)Phthalate	µg/L	Grab	2/Year	[10]
Dibenzo(a,h)Anthracene	µg/L	Grab	2/Year	[10]
Indeno(1,2,3-cd)Pyrene	µg/L	Grab	2/Year	[10]
2,3,7,8-TCDD and congeners	ρg/L	Grab	2/Year	[11]
Polynuclear Aromatic Hydrocarbons (PAHs)	µg/L	Grab	2/Year	[2]
Remaining Priority Pollutants [12]	µg/L	Grab	1/Year	[2]
Standard Observations	--	Daily	1/Day	--

[1] For effluent flows, the following information shall also be monitored and reported in the monthly SMRs:

a. Daily Total Flow Volume (million gallons, MG)
b. Average Daily Flow (million gallons per day, MGD)
c. Maximum Daily Flow (MGD)
d. Minimum Daily Flow (MGD)

[2] Pollutants and pollutant parameters shall be analyzed using the analytical methods described in 40 CFR 136.

[3] If pH is monitored continuously, the minimum and maximum pH values for each day shall be reported in monthly Self-Monitoring Reports (SMRs).

[4] Each oil and grease sampling and analysis event shall be conducted in accordance with EPA Method 1664.

[5] The Discharger may, at its option, comply with the limits for hexavalent chromium by using total chromium results. In this case, analysis for hexavalent chromium is waived.

[6] Grab samples shall be collected coincident with composite samples collected for the analysis of regulated parameters.

[7] Acute bioassay tests shall be performed in accordance with MRP section V.A.

[8] Critical Life Stage Toxicity Tests shall be performed and reported in accordance with MRP section V.B.

[9] Selenium shall be analyzed using methods described in USEPA Method No. 200.8 or Standard Method No. 3114B or 3114C.

[10] The latest versions of USEPA Methods 624 (or 8240) and 625 (or 8270) shall be used.

[11] Chlorinated dibenzodioxins and chlorinated dibenzofurans shall be analyzed using the latest version of USEPA Method 1613. The Discharger shall collect 4-liter samples to lower the detection limits to the greatest extent practicable. Alternative methods of analysis must be approved by the Executive Officer.

[12] Priority pollutant sampling is addressed in the Regional Standard Provisions (Attachment G).

B. Discharge Point 003

1. The Discharger shall monitor Discharge Point 003 at Monitoring Location EFF-003A as follows:

Table E-5. Effluent Monitoring at EFF-003A

Parameter	Units	Sample Type	Minimum Sampling Frequency	Required Analytical Test Method
Flow Rate [1]	MGD	Continuous	1/Day	[2]
pH [3]	s.u.	Grab	1/Month	[2]
Temperature	^{o}F	Continuous	Continuous	[2]
Chlorine, Total Residual	mg/L	Grab	[4]	[2]
Standard Observations	--	Daily	1/Day	--

[1] For effluent flows, the following information shall also be monitored and reported in the monthly SMRs:

a. Daily Total Flow Volume (million gallons, MG)
b. Average Daily Flow (million gallons per day, MGD)
c. Maximum Daily Flow (MGD)
d. Minimum Daily Flow (MGD)

[2] Pollutants and pollutant parameters shall be analyzed using the analytical methods described in 40 CFR 136.

[3] If pH is monitored continuously, the minimum and maximum pH values for each day shall be reported in monthly Self-Monitoring Reports (SMRs).

[4] The Discharger shall monitor for Total Residual Chlorine at EFF-003 every 2 hours if intake chlorination occurs or if fresh water is used as a substitute for once-through cooling water. If fresh water is used to supplement once-through cooling water, the Discharger shall monitor for Total Residual Chlorine daily.

2. The Discharger shall monitor Discharge Point 003 at Monitoring Location EFF-003B as follows:

Table E-6. Effluent Monitoring at EFF-003B

Parameter	Units	Sample Type	Minimum Sampling Frequency	Required Analytical Test Method
Copper	µg/L	Grab/C-24	1/Month	[1]
Nickel	µg/L	Grab/C-24	1/Month	[1]
Selenium	µg/L	Grab/C-24	1/Year	[1][2]
Zinc	µg/L	Grab/C-24	1/Month	[1]
Dioxin-TEQ	ρg/L	Grab	2/Year	[1][3]
TOC	mg/L	Grab/C-24	1/Month	[1]
Remaining Priority Pollutants[4]	µg/L	Grab	1/Year	[1]

[1] Pollutants and pollutant parameters shall be analyzed using the analytical methods described in 40 CFR 136.

[2] Selenium shall be analyzed using methods described in USEPA Method No. 200.8.

[3] Chlorinated dibenzodioxins and chlorinated dibenzofurans shall be analyzed using the latest version of USEPA Method 1613. The Discharger shall collect 4-liter samples to lower the detection limits to the greatest extent practicable. Alternative methods of analysis must be approved by the Executive Officer.

[4] Sampling for all priority pollutants is addressed in the Regional Standard Provisions (Attachment G).

C. Discharge Point 004

The Discharger shall monitor stormwater discharges from Discharge Point 004 at Monitoring Location EFF-004 as follows.

Table E-7. Stormwater Monitoring at EFF-004

Parameter	Units	Sample Type	Minimum Sampling Frequency	Required Analytical Test Method
pH	s.u.	Continuous	2/Year	[1]
Oil and Grease	mg/L	Grab	2/Year	[1]
Total Organic Carbon (TOC)	mg/L	Grab	2/Year	[1]
Total Petroleum Hydrocarbons (TPH)	mg/L	Grab	[2]	[1]
TSS	mg/L	Grab	2/Year	[1]
Specific Conductance	µmhos/cm	Grab	2/Year	[1]

[1] Pollutants and pollutant parameters shall be analyzed using the analytical methods described in 40 CFR 136.

[2] TPH shall be monitored when TOC is detected.

V. WHOLE EFFLUENT TOXICITY TESTING

The Discharger shall monitor acute and chronic toxicity at Monitoring Location EFF-002 as described below.

A. Whole Effluent Acute Toxicity

1. Compliance with the acute toxicity effluent limitations of this Order shall be evaluated by measuring survival of test organisms exposed to 96-hour continuous flow-through bioassays.

2. Test species shall be rainbow trout unless the Executive Officer specifies otherwise in writing.

3. All bioassays shall be performed according to the most up-to-date protocols in 40 CFR 136, currently in *Methods for Measuring the Acute Toxicity of Effluents and Receiving Water to Freshwater and Marine Organisms*, 5th Edition.

4. If the Discharger demonstrates that specific identifiable substances in the discharge are rapidly rendered harmless upon discharge to the receiving water, compliance with the acute toxicity limit may be determined after test samples are adjusted to remove the influence of those substances. Written approval from the Executive Officer must be obtained to authorize such an adjustment.

5. Effluent used for fish bioassays must be dechlorinated prior to testing. Monitoring of the bioassay water shall include, on a daily basis, the following parameters: pH, dissolved oxygen, ammonia (if toxicity is observed), temperature, hardness, and alkalinity. These results shall be reported. If a violation of acute toxicity requirements occurs, the bioassay test shall be repeated with new fish as soon as practical and shall be repeated until a test fish survival rate of 90 percent or greater is observed. If the control fish survival rate is less than

90 percent, the bioassay test shall be restarted with new fish and shall continue as soon as practical until an acceptable test is completed (i.e., control fish survival rate is 90 percent or greater).

B. Whole Effluent Chronic Toxicity

1. Monitoring Requirements

a. *Sampling*. The Discharger shall collect 24-hour composite samples of the effluent at EFF-002 for critical life stage toxicity testing as indicated below. For toxicity tests requiring renewals, 24-hour composite samples collected on consecutive days are required.

b. *Test Species*. Chronic toxicity shall be monitored using critical life stage tests(s) and the most sensitive test species identified by screening phase testing. At the time of this permit adoption, the approved species is mysid shrimp (*Americamysis bahia*). The Executive Officer may change to another test species if data suggest that another test species is more sensitive to the discharge.

c. *Methodology*. Sample collection, handling and preservation shall be in accordance with USEPA protocols. In addition, bioassays shall be conducted in compliance with the most recently promulgated test methods, as shown in Appendix E-1. These are *Short-Term Methods for Estimating the Chronic Toxicity of Effluents and Receiving Waters to Marine and Estuarine Organisms*, currently third edition (EPA-821-R-02-014), and *Short-term Methods for Estimating the Chronic Toxicity of Effluents and Receiving Waters to Freshwater Organisms*, currently fourth Edition (EPA-821-R-02-013), with exceptions granted the Discharger by the Executive Officer and the Environmental Laboratory Accreditation Program (ELAP).

d. *Dilution Series.* The Discharger shall conduct tests at 100%, 50%, 25%, 10%, 5%, and 2.5%. The "%" represents percent effluent as discharged.

e. *Accelerated Monitoring*. The Discharger shall accelerate monitoring to occur monthly when either of the following conditions is exceeded:

(1) Three sample median value of 10 chronic toxicity units (TUc), or

(2) Single sample maximum value of 20 TUc.

2. Reporting Requirements

a. *Routine Reporting*. Toxicity test results for the current reporting period shall include, at a minimum, for each test:

i. Sample dates

ii. Test initiation date

iii. Test species

iv. End point values for each dilution (e.g., number of young, growth rate, percent survival)

v. NOEC values in percent effluent

vi. IC_{15}, IC_{25}, IC_{40}, and IC_{50} values (or EC_{15}, EC_{25} ... etc.) as percent effluent

vii. TUc values ($100/IC_{25}$ or $100/EC_{25}$, or 100/NOEC if the IC_{25} or EC_{25} cannot be statistically determined.)

viii. Mean percent mortality (±s.d.) after 96 hours in 100% effluent (if applicable)

ix. NOEC and LOEC values for reference toxicant tests

x. IC50 or EC50 values for reference toxicant tests

xi. Available water quality measurements for each test (pH, dissolved oxygen, temperature, conductivity, hardness, salinity, ammonia)

b. *Compliance Summary*. The results of the chronic toxicity testing shall be provided in the self-monitoring report and shall include a summary table of chronic toxicity data from at least 11 of the most recent samples. The information in the table shall include items listed above under MRP section V.B.2.a, specifically item numbers i, ii, iii, vi (IC_{25} or EC_{25}), vii, and viii.

3. Toxicity Reduction Evaluation (TRE)

a. To be ready to respond to toxicity events, the Discharger shall prepare a generic TRE work plan by August 29, 2011. The Discharger shall review and update the work plan as necessary to remain current and applicable to the discharge and discharge facilities.

b. Within 30 days of exceeding the accelerated monitoring trigger, the Discharger shall submit to the Regional Water Board a specific TRE work plan, which should be the generic work plan revised as appropriate for the toxicity event after consideration of available discharge data.

c. Within 30 days of the date of completion of the accelerated monitoring tests observed to exceed either trigger, the Discharger shall initiate a TRE in accordance with a TRE work plan that incorporates any and all comments from the Executive Officer.

d. The TRE shall be specific to the discharge and be prepared in accordance with current technical guidance and reference materials, including USEPA guidance materials. The TRE shall be conducted as a tiered evaluation process, as summarized below:

i. Tier 1 consists of basic data collection (routine and accelerated monitoring).

ii. Tier 2 consists of evaluation of optimization of the treatment process, including operation practices and in-plant process chemicals.

iii. Tier 3 consists of a toxicity identification evaluation (TIE).

iv. Tier 4 consists of evaluation of options for additional effluent treatment processes.

v. Tier 5 consists of evaluation of options for modifications of in-plant treatment processes.

vi. Tier 6 consists of implementation of selected toxicity control measures, and follow-up monitoring and confirmation of implementation success.

e. The TRE may be ended at any stage if monitoring finds there is no longer consistent toxicity (complying with requirements of section IV.A.6 of this Order).

f. The objective of the TIE shall be to identify the substance or combination of substances causing the observed toxicity. All reasonable efforts using currently available TIE methods shall be employed.

g. As toxic substances are identified or characterized, the Discharger shall continue the TRE by determining the sources and evaluating alternative strategies for reducing or eliminating the substances from the discharge. All reasonable steps shall be taken to reduce toxicity to levels consistent with chronic toxicity evaluation parameters.

h. Many recommended TRE elements parallel required or recommended efforts of source control, pollution prevention, and stormwater control programs. TRE efforts should be coordinated with such efforts. To prevent duplication of efforts, evidence of complying with requirements or recommended efforts of such programs may be acceptable to comply with TRE requirements.

i. Chronic toxicity may be episodic and identification of causes of, and reduction of, sources of chronic toxicity may not be successful in all cases. Regional Water Board consideration of enforcement action will be based in part on the Discharger's actions and efforts to identify and control or reduce sources of consistent toxicity.

VI. RECEIVING WATER MONITORING REQUIREMENTS

The Discharger shall monitor receiving water at Monitoring Locations RSW-002 and RSW-003 as follows.

Table E-8. Receiving Water Monitoring at RSW-002 and RSW-003

Parameter	Units	Sample Type	Minimum Sampling Frequency	Required Analytical Test Method
pH	s.u.	Grab	1/Quarter	[1]
Temperature	°F	Grab	1/Quarter	[1]
Dissolved Oxygen	mg/L	Grab	1/Quarter	[1]
Sulfides	mg/L	Grab	1/Quarter	[1]
Unionized Ammonia	mg/L	Grab	1/Quarter	[1]
Salinity	ppt	Grab	1/Quarter	[1]
Hardness	mg/L	Grab	1/Quarter	[1]
Standard Observations	--	--	1/Quarter	[2]

[1] Pollutants and pollutant parameters shall be analyzed using the analytical methods described in 40 CFR 136.

[2] Standard observations are listed in Attachment G (Standard Provisions), section III.C.1, Receiving Water Observations.

VII. LEGEND FOR MRP TABLES

Types of Samples

C-24	=	composite sample, 24 hours (includes continuous sampling, such as for flows)
Grab	=	grab sample

Frequency of Sampling

1/Week	=	once each week
1/Month	=	once each month
1/Quarter	=	once each calendar quarter (at about three month intervals)
2/Year	=	twice each calendar year (at about 6 months intervals, once during dry season, once during wet season)

Parameter and Unit Abbreviations

BOD_5	=	5-day biochemical oxygen demand
COD	=	chemical oxygen demand
TUc	=	chronic toxicity units
°C	=	degrees Celsius
DO	=	dissolved oxygen
µg/L	=	micrograms per liter
µmhos/cm	=	micromhos/centimeter
MG	=	million gallons
MGD	=	million gallons per day
mg/L	=	milligrams per liter
ml/L-hr	=	milliliters per liter, per hour
MPN/100 ml	=	most probable number per 100 milliliters
% survival	=	percent survival
PAHs	=	polycyclic aromatic hydrocarbons
lbs/day	=	pounds per day
TSS	=	total suspended solids
s.u.	=	standard pH units

VIII. REPORTING REQUIREMENTS

A. General Monitoring and Reporting Requirements

The Discharger shall comply with all Federal Standard Provisions (Attachment D) and Regional Standard Provisions (Attachment G) related to monitoring, reporting, and recordkeeping.

B. Self Monitoring Reports

1. At any time during the term of this Order, the State or Regional Water Board may notify the Discharger to electronically submit Self-Monitoring Reports (SMRs) using the State Water Board's California Integrated Water Quality System (CIWQS) Program Web site (http://www.waterboards.ca.gov/ciwqs/index.html). Until such notification is given, the

Discharger shall submit hard copy SMRs. The CIWQS Web site will provide additional directions for SMR submittal in the event there will be service interruption for electronic submittal.

2. The Discharger shall report in each SMR the results for all monitoring specified in this MRP. The Discharger shall submit monthly and annual SMRs including the results of all required monitoring using USEPA-approved test methods or other test methods specified in this Order. If the Discharger monitors any pollutant more frequently than required by this Order, the results of such monitoring shall be included in the calculations and reporting of the data submitted in the SMR. Monthly SMRs shall be due on the 30th day following the end of each calendar month, covering samples collected during that calendar month; Annual Reports shall be due on February 1 following each calendar year.

3. Monitoring periods and reporting for all required monitoring shall be completed according to the following schedule:

Table E-9. Monitoring Periods and Reporting Schedule

Sampling Frequency	Monitoring Period Begins On…	Monitoring Period
Continuous	Day after permit effective date	All
1/Hour	Day after permit effective date	Hourly
1/Day	Day after permit effective date	Midnight through 11:59 PM or any 24-hour period that reasonably represents a calendar day for purposes of sampling.
1/Week	Sunday following permit effective date or on permit effective date if on a Sunday	Sunday through Saturday
1/Month	First day of calendar month following permit effective date or on permit effective date if that date is first day of the month	1st day of calendar month through last day of calendar month
1/Quarter	Closest of January 1, April 1, July 1, or October 1 following (or on) permit effective date	January 1 through March 31 April 1 through June 30 July 1 through September 30 October 1 through December 31
2/Year	Closest of January 1 or July 1 following (or on) permit effective date	January 1 through June 30 July 1 through December 31
1/Year	January 1 following (or on) permit effective date	January 1 through December 31
1/Discharge Event	Anytime during the discharge event or as soon as possible after aware of the event	At a time when sampling can characterize the discharge event

4. The Discharger shall report with each sample result the applicable Reporting Level (RL) and the current Method Detection Limit (MDL), as determined by the procedure in 40 CFR 136.

The Discharger shall report the results of analytical determinations for the presence of chemical constituents in a sample using the following reporting protocols:

a. Sample results greater than or equal to the RL shall be reported as measured by the laboratory (i.e., the measured chemical concentration in the sample).

b. Sample results less than the RL, but greater than or equal to the laboratory's MDL, shall be reported as "Detected, but Not Quantified" or DNQ. The estimated chemical concentration of the sample shall also be reported.

For the purposes of data collection, the laboratory shall write the estimated chemical concentration next to DNQ as well as the words "Estimated Concentration" (may be shortened to "Est. Conc."). The laboratory may, if such information is available, include numerical estimates of the data quality for the reported result. Numerical estimates of data quality may be percent accuracy (± a percentage of the reported value), numerical ranges (low to high), or any other means considered appropriate by the laboratory.

c. Sample results less than the laboratory's MDL shall be reported as "Not Detected" or "ND."

d. Dischargers are to instruct laboratories to establish calibration standards so that the ML (or its equivalent if there is differential treatment of samples relative to calibration standards) is the lowest calibration standard. At no time is the Discharger to use analytical data derived from extrapolation beyond the lowest point of the calibration curve.

5. The Discharger shall submit SMRs in accordance with the following requirements:

a. The Discharger shall arrange all reported data in a tabular format. The data shall be summarized to clearly illustrate whether the facility is operating in compliance with effluent limitations. The Discharger is not required to duplicate the submittal of data entered in a tabular format within CIWQS. When electronic submittal of data is required and CIWQS does not provide for entry into a tabular format within the system, the Discharger shall electronically submit the data in a tabular format as an attachment.

b. The Discharger shall attach a cover letter to the SMR. The information in the cover letter shall clearly identify violations of the Waste Discharge Requirements, discuss corrective actions taken or planned, and specify the proposed time schedule for corrective actions. Identified violations shall include a description of the requirement that was violated and a description of the violation.

c. The Discharger shall submit SMRs to the Regional Water Board, signed and certified as required by the Federal Standard Provisions (Attachment D), to the address listed below:

California Regional Water Quality Control Board
San Francisco Bay Region
1515 Clay Street, Suite 1400
Oakland, CA 94612
ATTN: NPDES Wastewater Division

C. Discharge Monitoring Reports

1. As described in section VIII.B.1 above, at any time during the term of this Order, the State or Regional Water Board may notify the Discharger to electronically submit SMRs that will satisfy federal requirements for submittal of Discharge Monitoring Reports (DMRs). Until

such notification is given, the Discharger shall submit DMRs in accordance with the requirements described below.

2. DMRs shall be signed and certified as required by the Federal Standard Provisions (Attachment D). The Discharger shall submit the original DMR and one copy of the DMR to one of the addresses listed below:

Standard Mail	FedEx/UPS/Other Private Carriers
State Water Resources Control Board Division of Water Quality c/o DMR Processing Center PO Box 100 Sacramento, CA 95812-1000	State Water Resources Control Board Division of Water Quality c/o DMR Processing Center 1001 I Street, 15th Floor Sacramento, CA 95814

3. All discharge monitoring results shall be reported on the official USEPA pre-printed DMR forms (EPA Form 3320-1). Forms that are self-generated will not be accepted unless they follow the exact same format as EPA Form 3320-1.

D. Other Reports

Annually, with the first monthly SMR following the respective due dates, the Discharger shall report the results of any special studies, monitoring, and reporting required by section VI.C.2 (Special Studies, Technical Reports, and Additional Monitoring Requirements) of this Order.

IX. BYPASS REQUIREMENTS

If the Discharger bypasses any of its treatment units under the conditions stated in Attachment D, section I.G.2, it shall monitor flows and collect samples daily at affected discharge points for all constituents with effluent limits (except chronic toxicity) for the duration of the bypass (including acute toxicity using static renewals). Because such discharges may result in noncompliance that may endanger health or the environment, the Discharger shall follow the reporting requirements of Attachment D, section V.E.1.

APPENDIX E-1
CHRONIC TOXICITY
DEFINITION OF TERMS AND SCREENING PHASE REQUIREMENTS

I. Definition of Terms

A. No observed effect level (NOEL) for compliance determination is equal to IC_{25} or EC_{25}. If the IC_{25} or EC_{25} cannot be statistically determined, the NOEL shall be equal to the NOEC derived using hypothesis testing.

B. Effective concentration (EC) is a point estimate of the toxicant concentration that would cause an adverse effect on a quantal, "all or nothing," response (such as death, immobilization, or serious incapacitation) in a given percent of the test organisms. If the effect is death or immobility, the term lethal concentration (LC) may be used. EC values may be calculated using point estimation techniques such as probit, logit, and Spearman-Karber. EC_{25} is the concentration of toxicant (in percent effluent) that causes a response in 25 percent of the test organisms.

C. Inhibition concentration (IC) is a point estimate of the toxicant concentration that would cause a given percent reduction in a nonlethal, nonquantal biological measurement, such as growth. For example, an IC_{25} is the estimated concentration of toxicant that would cause a 25 percent reduction in average young per female or growth. IC values may be calculated using a linear interpolation method such as USEPA's Bootstrap Procedure.

D. No observed effect concentration (NOEC) is the highest tested concentration of an effluent or a toxicant at which no adverse effects are observed on the aquatic test organisms at a specific time of observation. It is determined using hypothesis testing.

II. Chronic Toxicity Screening Phase Requirements

A. The Discharger shall perform screening phase monitoring:

1. Subsequent to any significant change in the nature of the effluent discharged through changes in sources or treatment, except those changes resulting from reductions in pollutant concentrations attributable to source control efforts, or

2. Prior to permit reissuance. Screening phase monitoring data shall be included in the NPDES permit application for reissuance. The information shall be as recent as possible, but may be based on screening phase monitoring conducted within 5 years before the permit expiration date.

B. Design of the screening phase shall, at a minimum, consist of the following elements:

1. Use of test species specified in **Appendix E-2**, attached, and use of the protocols referenced in those tables, or as approved by the Executive Officer.

2. Two stages:

a. Stage 1 shall consist of a minimum of one battery of tests conducted concurrently. Selection of the type of test species and minimum number of tests shall be based on **Appendix E-2** (attached).

b. Stage 2 shall consist of a minimum of two test batteries conducted at a monthly frequency using the three most sensitive species based on the Stage 1 test results and as approved by the Executive Officer.

3. Appropriate controls.

4. Concurrent reference toxicant tests.

5. Dilution series 100%, 50%, 25%, 10%, 5%, 0 %, where "%" is percent effluent as discharged, or as otherwise approved the Executive Officer.

C. The Discharger shall submit a screening phase proposal acceptable to the Executive Officer. The proposal shall address each of the elements listed above. If within 30 days, the Executive Officer does not comment, the Discharge shall commence with screening phase monitoring.

APPENDIX E-2
SUMMARY OF TOXICITY TEST SPECIES REQUIREMENTS

Critical Life Stage Toxicity Tests for Estuarine Waters

Species	(Scientific Name)	Effect	Test Duration	Reference
Alga	*(Skeletonema costatum)* *(Thalassiosira pseudonana)*	Growth rate	4 days	1
Red alga	*(Champia parvula)*	Number of cystocarps	7–9 days	3
Giant kelp	*(Macrocystis pyrifera)*	Percent germination; germ tube length	48 hours	2
Abalone	*(Haliotis rufescens)*	Abnormal shell development	48 hours	2
Oyster Mussel	*(Crassostrea gigas)* *(Mytilus edulis)*	Abnormal shell development; percent survival	48 hours	2
Echinoderms - Urchins Sand dollar	*(Strongylocentrotus purpuratus, S. franciscanus)* *(Dendraster excentricus)*	Percent fertilization	1 hour	2
Shrimp	*(Mysidopsis bahia)*	Percent survival; growth	7 days	3
Shrimp	*(Holmesimysis costata)*	Percent survival; growth	7 days	2
Topsmelt	*(Atherinops affinis)*	Percent survival; growth	7 days	2
Silversides	*(Menidia beryllina)*	Larval growth rate; percent survival	7 days	3

Toxicity Test References:

1. American Society for Testing Materials (ASTM). 1990. Standard Guide for Conducting Static 96-Hour Toxicity Tests with Microalgae. Procedure E 1218-90. ASTM, Philadelphia, PA.
2. Short-term Methods for Estimating the Chronic Toxicity of Effluent and Receiving Waters to West Coast Marine and Estuarine Organisms. EPA/600/R-95/136. August 1995.
3. Short-term Methods for Estimating the Chronic Toxicity of Effluent and Receiving Waters to Marine and Estuarine Organisms. EPA/600/4-90/003. July 1994.

Critical Life Stage Toxicity Tests for Fresh Waters

Species	(Scientific Name)	Effect	Test Duration	Reference
Fathead minnow	*(Pimephales promelas)*	Survival; growth rate	7 days	4
Water flea	*(Ceriodaphnia dubia)*	Survival; number of young	7 days	4
Alga	*(Selenastrum capricornutum)*	Cell division rate	4 days	4

Toxicity Test Reference:

4. Short-term Methods for Estimating the Chronic Toxicity of Effluents and Receiving Waters to Freshwater Organisms, third edition. EPA/600/4-91/002. July 1994.

Toxicity Test Requirements for Stage One Screening Phase

Requirements	Receiving Water Characteristics		
	Discharges to Coast	Discharges to San Francisco Bay[2]	
	Ocean	Marine/Estuarine	Freshwater
Taxonomic diversity	1 plant 1 invertebrate 1 fish	1 plant 1 invertebrate 1 fish	1 plant 1 invertebrate 1 fish
Number of tests of each salinity type: Freshwater[1] Marine/Estuarine	0 4	1 or 2 3 or 4	3 0
Total number of tests	4	5	3

[1] The freshwater species may be substituted with marine species if:

(a) The salinity of the effluent is above 1 part per thousand (ppt) greater than 95 percent of the time, or

(b) The ionic strength (TDS or conductivity) of the effluent at the test concentration used to determine compliance is documented to be toxic to the test species.

[2] (a) Marine/Estuarine refers to receiving water salinities greater than 1 ppt at least 95 percent of the time during a normal water year.

(b) Fresh refers to receiving water with salinities less than 1 ppt at least 95 percent of the time during a normal water year.

ATTACHMENT F – FACT SHEET

Table of Contents

I. Permit Information F-3
II. Facility Description F-4
  A. Description of Wastewater Treatment or Controls F-4
  B. Discharge Points and Receiving Waters F-6
  C. Summary of Existing Requirements and Self-Monitoring Report (SMR) Data F-6
  D. Compliance Summary F-8
  E. Planned Changes F-10
III. Applicable Plans, Policies, and Regulations F-10
  A. Legal Authorities F-11
  B. California Environmental Quality Act (CEQA) F-11
  C. State and Federal Regulations, Policies, and Plans F-11
  D. Impaired Water Bodies on CWA 303(d) List F-12
IV. Rationale For Effluent Limitations and Discharge Specifications F-12
  A. Discharge Prohibitions F-13
  B. Technology-Based Effluent Limitations F-14
    1. Scope and Authority F-14
    2. Technology-Based Effluent Limitations – Discharge Point 002 ..... F-15
    3. Technology-Based Effluent Limitations – Discharge Point 003 ..... F-15
    4. Technology-Based Effluent Limitations – Discharge Point 004 ..... F-16
  C. Water Quality-Based Effluent Limitations for Toxic Substances F-16
    1. Scope and Authority F-16
    2. Applicable Beneficial Uses and Water Quality Objectives F-16
    3. Determining the Need for WQBELs F-19
    4. WQBEL Calculations F-28
  D. Anti-backsliding and Antidegradation F-52
    1. Anti-backsliding F-52
    2. Antidegradation F-52
V. Rationale for Receiving Water Limitations F-55
VI. Rationale for Monitoring and Reporting Requirements F-56
  A. Influent Monitoring F-56
  B. Effluent Monitoring F-56
  C. Whole Effluent Toxicity Testing Requirements F-57
  D. Receiving Water Monitoring F-57
VII. Rationale for Provisions F-57
  A. Standard Provisions (Provision VI.A) F-57
  B. Monitoring and Reporting Requirements (Provision VI.B) F-58
  C. Special Provisions (Provision VI.C) F-58
    1. Reopener Provisions F-58
    2. Special Studies and Additional Monitoring F-58
    3. Best Management Practices Program (BMP Program) and Pollution Minimization Program (PMP) F-61
    4. Other Special Provisions F-61
VIII. Public Participation F-62

A. Notification of Interested Parties F-62
B. Written Comments F-62
C. Public Hearing F-62
D. Waste Discharge Requirements Petitions F-62
E. Information and Copying F-63
F. Register of Interested Persons F-63
G. Additional Information F-63

List of Tables

Table F-1. Facility Information F-3
Table F-2. Outfall Locations F-6
Table F-3. Historical Effluent Limitations and Monitoring Data for Conventional and Non-Conventional Pollutants for Discharge Point 002 ..... F-6
Table F-4. Historical Effluent Limitations and Monitoring Data for Toxic Pollutants at Discharge Point 002 ..... F-7
Table F-5. Historical Effluent Limitations and Monitoring Data for Conventional and Non-Conventional Pollutants for Discharge Point 003 ..... F-8
Table F-6. Historical Effluent Limitations and Monitoring Data for Conventional and Non-Conventional Pollutants for Discharge Point 004 ..... F-8
Table F-7. Discharge Point 002 Numeric Effluent Violations F-8
Table F-8. Hydrocarbon Spills F-10
Table F-9. Technology-Based Effluent Limitations for Discharge Point 004 ..... F-16
Table F-10. Basin Plan Beneficial Uses F-17
Table F-11. Translators for Copper and Nickel for Deepwater Discharges North of Dumbarton Bridge F-19
Table F-12. Site-Specific Translators for Copper and Nickel for Discharge Point 003 ..... F-19
Table F-13. Summary of RPA Results – Discharge Point 002 ..... F-21
Table F-14. Summary of RPA Results – Discharge Point 003 ..... F-24
Table F-15. Effluent Limitation Calculations for Discharge Point 002 ..... F-39
Table F-16. Effluent Limitation Calculations for Discharge Point 003 ..... F-47
Table F-17. 99th Percentile Differences Between Influent and Effluent Concentrations at Discharge Point 003 ..... F-51
Table F-18. Comparison of Historical Effluent Limitations and Effluent Limitations in this Order for Discharge Point 002 ..... F-54

ATTACHMENT F – FACT SHEET

As described in section II of this Order, this Fact Sheet includes the legal requirements and technical rationale that serve as the basis for the requirements of this Order.

This Order has been prepared under a standardized format to accommodate a broad range of discharge requirements for dischargers in California. Only those sections or subsections of this Order that are specifically identified as "not applicable" have been determined not to apply to this Discharger. All other sections or subsections of this Order apply fully to this Discharger.

I. PERMIT INFORMATION

The following table summarizes administrative information related to the ConocoPhillips San Francisco Refinery at Rodeo.

Table F-1. Facility Information

WDID	2071051001
Discharger	ConocoPhillips Company
Name of Facility	San Francisco Refinery at Rodeo
Facility Address	1380 San Pablo Avenue
	Rodeo, CA 94572
	Contra Costa County
Facility Contact, Title, Phone	Dennis Quilici, Water Compliance Specialist, (510) 245-4403
Authorized Person to Sign and Submit Reports	Kevin Schmitt, Environmental Services Superintendent (510) 245-5825
Mailing Address	1380 San Pablo Avenue, Rodeo, CA 94572
Billing Address	1380 San Pablo Avenue, Rodeo, CA 94572
Type of Facility	Petroleum Refinery
Major or Minor Facility	Major
Threat to Water Quality	1
Complexity	A
Pretreatment Program	No
Reclamation Requirements	No
Facility Flow	Discharge Point 002: 8.89 million gallons per day (MGD) (maximum reported daily flow) Discharge Point 003: 54.0 MGD (maximum reported daily flow) Discharge Point 004: Not Available
Watershed	San Pablo Basin
Receiving Water	San Pablo Bay
Receiving Water Type	Estuarine

A. The ConocoPhillips Company (hereinafter Discharger) owns and operates the San Francisco Refinery (hereinafter Facility). For the purposes of this Order, references to the "Discharger" or "Permittee" in applicable federal and state laws, regulations, plans, or policy are held to be equivalent to references to the Discharger herein.

B. The Facility discharges treated wastewater and stormwater to San Pablo Bay, a water of the United States, and is currently regulated by Order No. R2-2005-0030, which was adopted on June 15, 2005. Order No. R2-2005-0030 was amended by Order No. R2-2010-0056 (Amendment of Waste Discharge Requirements for Municipal and Industrial Dischargers to Implement Cyanide and Copper Site-specific Objectives), which amended limits on cyanide and copper, and by Order No. R2-2010-0057 (Amendment of Waste Discharge Requirements for San Francisco Bay Region Refineries), which amended effluent limitations for selenium. The Discharger is also regulated by Order No. R2-2007-0077 (NPDES Permit CA0038849), which supersedes all requirements on mercury and PCBs from wastewater discharges in the region. This Order does not affect Order No. R2-2007-0077.

C. The Discharger filed a Report of Waste Discharge and submitted an application for reissuance of its NPDES permit on March 4, 2010.

II. FACILITY DESCRIPTION

A. Description of Wastewater Treatment or Controls

The Discharger owns and operates the Facility, which processes an average crude oil throughput of approximately 77,360 barrels per day (bbls/day). The Facility produces gasoline, diesel fuel, jet fuel, fuel oil and other petroleum products. Sulfur and petroleum coke are sold as by-products. The Facility discharges to San Pablo Bay via three outfalls (Discharge Points 002, 003, and 004). Discharge from Discharge Point 001 was discontinued on January 24, 2003. In May 2004, the Discharger plugged the last 40 feet of the Discharge Point 001 outfall pipe and sump with concrete.

1. **Discharge Point 002.** The Facility's wastewater treatment plant treats and discharges the following treated wastewaters (and annual average flows) from Discharge Point 002: refinery process wastewaters (1.7 MGD), boiler blowdown (0.1 MGD), cooling tower blowdown (0.3 MGD), sanitary wastewater (0.012 MGD), sour water stripper bottoms (0.5 MGD), groundwater (0.001 MGD), stormwater runoff from refinery process areas (0.56 MGD), offsite wastewater generated at other ConocoPhillips facilities, including remediation wastewater and cargo hold washwater (0.01 MGD). Periodically, water from process area fire equipment monitoring and fire hydrant testing is also directed to the wastewater treatment plant.

   The Facility's wastewater collection system transports all process wastewater (except wastewater from the lower tank farm), refinery process area stormwater, and sanitary wastewater to a stormwater splitter box. Some process wastewater is treated by non-phenolic and phenolic sour water strippers, and the Selenium Reduction Plant, prior to entering the Facility's wastewater collection system.

   Wastewater that flows from the stormwater splitter box or lower tank farm to dry and wet weather sumps is pumped to equalization and storage tanks, then flows by gravity to an American Petroleum Institute (API) oil-water separator, which removes most oil and solids. Removed oil is transferred to an oil recovery system, and solids are transferred to a collection tank. API oil-water separator effluent flows to a flash-mixing chamber, where primary and secondary coagulants may be added, then to dissolved air flotation (DAF) units, which remove remaining oil and solids.

   If wastewater flow exceeds the pumping capacity of the wet weather sumps and/or volumetric capacity of the equalization tanks, excess wastewater overflows to primary and main storm

basins. When wastewater flow returns to normal, wastewater in the primary and main storm basins is drained back to the wet weather sump and pumped to the equalization tanks.

The DAF units (four in total) treat wastewater through (a) chemical addition and flocculation of wastewater, (b) aeration to float flocculated solids and oil to the surface, and (c) mechanical removal of floated solids and oil. The Discharger sends settled solids from the API and DAF units to the collection tank for transport to a delayed coking unit.

DAF unit effluent is treated by biological oxidation (activated sludge) augmented by powdered activated carbon (PAC) treatment, in two parallel aeration tanks. Biological solids, spent PAC, and inert solids are then settled out in two parallel clarifiers. The settled biological solids and PAC are recycled based on sludge age and influent wastewater flow. The Discharger routes a portion of recycled solids to its wet air regeneration system.

Clarifier effluent is normally filtered by granular media filters (up to 8 operate in parallel), then routed by gravity to a sump, from which it is pumped to a deepwater diffuser in San Pablo Bay at Discharge Point 002. Treated wastewater is disinfected using sodium hypochlorite and dechlorinated using sodium bisulfite before discharge. The Facility can redirect treated flows to Discharge Point 003 if there is a failure in the deepwater diffuser line (which, to date, has never occurred).

2. **Discharge Point 003.** The Facility discharges once-through non-contact cooling water (38.3 MGD); demineralizer regeneration wastewater (0.2 MGD); and stormwater from non-industrial and undeveloped areas of the refinery, sections of Interstate-80, San Pablo Avenue, adjacent parking lots and paved areas, and residential portions of Rodeo (0.45 MGD) through Discharge Point 003. Once-through cooling water and demineralizer regeneration wastewater are monitored at Monitoring Point EFF-003B; the remaining flow is monitored at Monitoring Point EFF-003A. Discharges other than cooling water are less than 2 percent of the flow from Discharge Point 003. The Facility can chlorinate cooling water before use, as needed, and dechlorinate it after use, before it mixes with stormwater runoff and is discharged. Fresh water may be used as a substitute or supplement for once-through, non-contact cooling water if necessary as a result of loss of saltwater pump flow or maintenance work on the saltwater cooling system.

   Once-through cooling water discharge flows are conveyed below grade through a 36-inch pipe, across Refinery property and under Highway 40 (San Pablo Avenue), daylighting in an open splitter-box. Flows from the splitter-box lead separately to an open channel and to a large, shallow retention basin. Cooling water flows across the basin down a short rock weir to rejoin the divided flow from the open channel, which goes around the retention basin. This system reduces the temperature of the discharge. The combined flows are discharged at Discharge Point 003, located approximately 20 meters downstream from the confluence of the basin and open channel.

   The intake structure for once-through cooling water is located at the base of the Marine Terminal Causeway, 2,500 feet to the north. The intake structure consists of four intake bays with 30-inch diameter T-shaped intake pipes covered by 3/32-inch mesh wedgewire screens, with five pumps capable of withdrawing a maximum flow of 49,000 gallons per minute (gpm). Typically, a maximum of four are operated at a time. The wedgewire screens are part of a system to reduce impingement and entrainment of aquatic life.

3. **Discharge Point 004.** The Facility discharges stormwater run-off from its marine terminal complex, including the wharf and access road causeway, directly to San Pablo Bay. The Discharger has developed and implements a stormwater pollution prevention program addressing this discharge. Fire equipment monitoring and fire hydrant testing water is discharged from the Marine Terminal during annual safety testing. Steam and, potentially, condensate drips are discharged from steam traps on insulated pipelines along the Marine Terminal causeway. Infrequent discharges of boom boat wash-off water and algae removal water from the boat launch ramp occur, if necessary.

B. Discharge Points and Receiving Waters

The receiving water and the discharge point locations are shown in Table F-2 below and Attachment B. Compliance monitoring is conducted at Monitoring Locations EFF-002, EFF-003, and EFF-004 as described in Attachment E, Monitoring and Reporting Program (MRP). San Pablo Bay is located in the San Pablo Bay Watershed.

Table F-2. Outfall Locations

Discharge Point	Effluent Description	Discharge Point Latitude	Discharge Point Longitude	Receiving Water
002	Treated refinery wastewater, boiler blowdown, cooling tower blowdown, sanitary wastewater, groundwater, process area stormwater, remediation wastewater, and fire equipment monitoring and fire hydrant testing water	38º 03’ 22” N	122º 15’ 36” W	San Pablo Bay
003	Non-contact once-through cooling water, demineralizer regeneration wastewater, stormwater, and runoff from sections of Interstate 80 and San Pablo Avenue	38º 02’ 41” N	122º 15’ 41” W	San Pablo Bay
004	Stormwater and runoff from the marine terminal and marine terminal causeway, marine terminal causeway area fire equipment monitoring and fire hydrant testing water, boom boat wash-off water, steam condensate drips, and algae removal water from the boat launch ramp	38º 03’ 22” N	122º 15’ 36” W	San Pablo Bay

C. Summary of Existing Requirements and Self-Monitoring Report (SMR) Data

Effluent limitations for discharges to San Pablo Bay and representative monitoring data from the term of previous permit are as follows:

Table F-3. Historical Effluent Limitations and Monitoring Data for Conventional and Non-Conventional Pollutants for Discharge Point 002

Parameter	Units	Effluent Limitations		Monitoring Data (From September 2005 to March 2010)	
		Monthly Average	Daily Maximum	Highest Monthly Average	Highest Daily Discharge
Biochemical Oxygen Demand (BOD) (5-day @ 20 °C)	lbs/day	850	1,500	370	370
Total Suspended Solids (TSS)	lbs/day	700	1,100	771	1,482

Parameter	Units	Effluent Limitations		Monitoring Data (From September 2005 to March 2010)	
		Monthly Average	Daily Maximum	Highest Monthly Average	Highest Daily Discharge
Chemical Oxygen Demand (COD)	lbs/day	5,900	11,000	3,810	3,810
Oil and Grease	lbs/day	250	460	--	<331
	mg/L	8.0	15	5.5	5.5
Phenolic Compounds	lbs/day	4.7	11	0.20[1]	--
Ammonia as N	lbs/day	460	1,000	377	914
Sulfide	lbs/day	4.8	10	4.76	4.76
Settleable Solids	mL/L	0.1	0.2	--	0.1
Total Chromium	lbs/day	5.4	16	--	<1.9
Hexavalent Chromium	lbs/day	0.45	1.0	--	<1.9
pH	standard units	6.0 – 9.0		6.5 – 8.9	
Residual Chlorine	mg/L	0.0[2]		--	0.45
Total Coliform	MPN/100 mL	240[3]	10,000[4]	--	500

[1] Converted to lbs/day from reported 6.0 lbs/month.
[2] Residual chlorine limit expressed as instantaneous maximum.
[3] Limit expressed as median of five consecutive samples
[4] Limit expressed as single sample maximum.

Table F-4. Historical Effluent Limitations and Monitoring Data for Toxic Pollutants at Discharge Point 002

Parameter	Units	Final Limits		Interim Limits[1]		Monitoring Data (From September 2005 to March 2010)
		Daily Maximum	Monthly Average	Daily Maximum	Monthly Average	Highest Daily Concentration
Copper	µg/L	25	13	37	--	66
Lead	µg/L	9.5	3.2	--	--	2.0
Mercury	µg/L	0.045	0.019	--	0.075	0.11
Nickel	µg/L	82	41	--	--	5.4
Selenium	µg/L	8.0	4.2	50	--	75
Cyanide	µg/L	6.4	3.2	25	--	ND(2.0)[2]
Chlorodibromomethane	µg/L	650	340	--	--	31
Dichlorobromomethane	µg/L	940	460	--	--	47
4,4'-DDE	µg/L	0.0012	0.00059	0.05	--	ND(0.003)[2]
Dieldrin	µg/L	0.00028	0.00014	0.01	--	ND(0.002)[2]
Total PCBs (Sum)	µg/L	0.00034	0.00017	0.5	--	<0.5
TCDD Equivalents	ρg/L	0.028	0.014	--	0.14[1]	0.025

[1] Interim limits were effective until April 27, 2010, for cyanide and selenium; until May 17, 2010, for copper, 4,4'-DDE, dieldrin, and PCBs; and until August 13, 2015, for TCDD Equivalents.
[2] Analyte not detected in effluent. Number is the lowest method detection limit (MDL) reported by the analytical laboratory.

Table F-5. Historical Effluent Limitations and Monitoring Data for Conventional and Non-Conventional Pollutants for Discharge Point 003

Parameter	Units	Effluent Limitations		Monitoring Data (From September 2005 to May 2010)	
		Monthly Average	Daily Maximum	Highest Monthly Average	Highest Daily Discharge
pH	standard units	6.5 – 8.5		7.6 – 8.2	
Temperature	°F	--	110	--	108
Total Organic Carbon (TOC)	mg/L	5[1]		4.7	
Residual Chlorine	mg/L	--	0.0	--	ND(0.05)[2]

[1] Total organic carbon limit expressed as any value shall not to be greater than 5 mg/L.
[2] Analyte not detected in effluent. Number is the lowest method detection limit (MDL) reported by the analytical laboratory.

Table F-6. Historical Effluent Limitations and Monitoring Data for Conventional and Non-Conventional Pollutants for Discharge Point 004

Parameter	Units	Effluent Limitations		Monitoring Data (From December 2005 to February 2010)	
		Monthly Average	Daily Maximum	Highest Monthly Average	Highest Daily Discharge
pH	standard units	6.5 – 8.5		7.1 – 7.9	
Oil and Grease	mg/L	--	15	--	<8.62
Total Organic Carbon (TOC)	mg/L	--	110	--	32
Visible Oil	--	[1]		--	
Visible Color	--	[1]		--	

[1] Narrative limits expressed as no visible oil or color observed in the effluent discharged from Discharge Point 004.

D. Compliance Summary

1. **Compliance with Numeric Effluent Limits.** The Discharger violated numeric effluent limits for copper, selenium, acute toxicity, and total residual chlorine at Discharge Point 002 during the previous permit term. The following table outlines the violations and associated enforcement actions.

Table F-7. Discharge Point 002 Numeric Effluent Violations

Date of Violation	Violated Parameter	Units	Effluent Limitation	Reported Value
Informal Enforcement				
April 17, 2006	Copper, Effluent Interim Daily Maximum	µg/L	37	43
Enforcement Order SWB-2008-2-003				
April 12, 2006	Copper, Effluent Interim Daily Maximum	µg/L	37	66.7
Enforcement Order R2-2010-0103				
January 7, 2008	Acute Toxicity, 11-Sample 90th Percentile	% Survival	70	60
January 8, 2008	Copper, Effluent Interim Daily Maximum	µg/L	37	38.33
January 15, 2008	Acute Toxicity, 11-Sample 90th Percentile	% Survival	70	35
January 15, 2008	Acute Toxicity, 11-Sample Moving Median	% Survival	90	85

January 28, 2008	Acute Toxicity, 11-Sample 90th Percentile	% Survival	70	25
March 31, 2008	Acute Toxicity, 11-Sample 90th Percentile	% Survival	70	65
May 13, 2008	Selenium, Interim Daily Maximum	µg/L	50	69
May 14, 2008	Selenium, Interim Daily Maximum	µg/L	50	75
May 15, 2008	Selenium, Interim Daily Maximum	µg/L	50	69
May 16, 2008	Selenium, Interim Daily Maximum	µg/L	50	71
May 17, 2008	Selenium, Interim Daily Maximum	µg/L	50	75
May 18, 2008	Selenium, Interim Daily Maximum	µg/L	50	60
May 19, 2008	Acute Toxicity, 11-Sample 90th Percentile	% Survival	70	65
May 22, 2008	Acute Toxicity, 11-Sample 90th Percentile	% Survival	70	30
July 1, 2008	Selenium, Interim Daily Maximum	µg/L	50	65
July 2, 2008	Selenium, Interim Daily Maximum	µg/L	50	62
July 3, 2008	Selenium, Interim Daily Maximum	µg/L	50	62
April 16, 2009	Total Residual Chlorine	mg/L	0	0.45
October 26, 2009	Acute Toxicity, 11-Sample 90th Percentile	% Survival	70	65
October 30, 2009	Acute Toxicity, 11-Sample 90th Percentile	% Survival	70	65
November 16, 2009	Acute Toxicity, 11-Sample 90th Percentile	% Survival	70	50
November 19, 2009	Acute Toxicity, 11-Sample 90th Percentile	% Survival	70	50
November 24, 2009	Acute Toxicity, 11-Sample 90th Percentile	% Survival	70	35
November 24, 2009	Acute Toxicity, 11-Sample Moving Median	% Survival	90	65
November 29, 2009	Acute Toxicity, 11-Sample 90th Percentile	% Survival	70	35
November 29, 2009	Acute Toxicity, 11-Sample Moving Median	% Survival	90	65
December 14, 2009	Acute Toxicity, 11-Sample Moving Median	% Survival	90	65
December 19, 2009	Acute Toxicity, 11-Sample 90th Percentile	% Survival	70	0
December 19, 2009	Acute Toxicity, 11-Sample Moving Median	% Survival	90	65
December 21, 2009	Acute Toxicity, 11-Sample 90th Percentile	% Survival	70	0
December 21, 2009	Acute Toxicity, 11-Sample Moving Median	% Survival	90	65
December 24, 2009	Acute Toxicity, 11-Sample Moving Median	% Survival	90	65

The April 17, 2006 copper effluent violation was neither chronic nor serious under CWC 13385; therefore, enforcement was informal.

State Water Board Order No. SWB-2008-2-0003, issued on July 24, 2008, fined the Discharger $3,000 in mandatory minimum penalties (MMPs) to address the April 12, 2006, copper effluent violation.

Regional Water Board Order No. R2-2010-0103, issued on July 16, 2010, fined the Discharger $600,000 through an Administrative Civil Liability (ACL) action to address effluent violations between January 1, 2008, and December 31, 2009. Order No. R2-2010-0103 required the Discharger to:

- pay $310,000 to the State Cleanup and Abatement Account;
- contribute $190,000 to a Supplemental Environmental Project; and
- complete two Enhanced Compliance Actions with a total estimated cost of $316,000 for suspension of $100,000 of the liability.

The Supplemental Environmental Project, to be performed with the Contra Costa Resource Conservation District, is to restore steelhead trout access to the upper reaches of Pinole Creek

by installing fish passage improvements at the I-80 culvert. ConocoPhillips funded the Supplemental Environmental Project on time (by October 14, 2010), and Contra Costa Resource Conservation District began work.

The Enhanced Compliance Actions consist of installing a total organic carbon/nitrogen analyzer at the DAF system outlet and upgrading one DAF unit. It is to be completed by October 1, 2011.

2. **Reported Spills.** The Discharger reported six hydrocarbon spills over the term of its previous permit, as listed in the following table.

Table F-8: Hydrocarbon Spills

Date	Estimated Volume	Location	Source (if determined)	Response (if any)
September 14, 2005	1 gallon	Light sheen observed in Discharge Point 003 cooling water channel	Oil leaked from once-through water cooling system heat exchangers	Deployed absorbent booms and vacuum trucks
December 31, 2005	N/A	Light, intermittent sheen observed at Discharge Point 003	Stormwater from San Pablo Avenue	Deployed absorbent booms and used underflow weirs
June 13, 2006	< 1 gallon	Light, intermittent sheen visible in Discharge Point 003 cooling water channel	Oil seep from groundwater extraction zone next to channel	Deployed absorbent booms and vacuum trucks
August 20, 2008	< 1 gallon	San Pablo Bay near Discharge Point 004	Pipeline leak during maintenance	Deployed boom boat and absorbent booms
January 30, 2009	< 0.1 gallon	Oil sheen observed near Discharge Point 003	Disturbance of an oil-water separator during construction	Deployed adsorbent booms, skimmer, boom boat, and vacuum trucks
January 18, 2010	0.01 gallon	Oil sheen observed near Discharge Point 003	Runoff from parking lot and asphalted area near Discharge Point 003	Deployed absorbent booms and vacuum trucks

These hydrocarbon releases violated the Discharger's receiving water limit prohibiting visible, floating, suspended, or deposited oil or other products of petroleum origin. Enforcement was informal because the amounts released were small, the Discharger notified the Regional Water Board appropriately, and the Discharger's responses to control and mitigate the spills were adequate.

E. Planned Changes

No changes to the Facility are planned.

III. APPLICABLE PLANS, POLICIES, AND REGULATIONS

The requirements in this Order are based on the requirements and authorities described in this section.

A. Legal Authorities

This Order is issued pursuant to federal Clean Water Act (CWA) section 402 and implements regulations adopted by USEPA, and pursuant to California Water Code (CWC) Chapter 5.5, Division 7 (commencing with section 13370). It shall serve as an NPDES permit for point source discharges from this facility to surface waters. This Order also serves as Waste Discharge Requirements (WDRs) pursuant to CWC Article 4, Chapter 4, Division 7 (commencing with section 13260).

B. California Environmental Quality Act (CEQA)

Under CWC section 13389, this action to adopt an NPDES permit is exempt from CEQA provisions.

C. State and Federal Regulations, Policies, and Plans

1. **Water Quality Control Plans.** *The Water Quality Control Plan for the San Francisco Bay Basin* (hereinafter Basin Plan) is the Regional Water Board's master water quality control planning document. It designates beneficial uses and water quality objectives for waters of the State, including surface waters and groundwater. It also includes programs of implementation to achieve the water quality objectives. The Basin Plan was duly adopted by the Regional Water Board and approved by the State Water Board, the Office of Administrative Law (OAL), and USEPA, as required. Requirements of this Order implement the Basin Plan.

   The State Water Board's *Water Quality Control Plan for Enclosed Bays and Estuaries – Part 1, Sediment Quality* became effective on August 25, 2009. This plan supersedes other narrative sediment quality objectives, and establishes new sediment quality objectives and related implementation provisions for specifically defined sediments in most bays and estuaries.

   The State Water Board adopted a *Water Quality Control Plan for Control of Temperature in the Coastal and Interstate Water and Enclosed Bays and Estuaries of California* (hereinafter Thermal Plan) on May 18, 1972, and amended this plan on September 18, 1975. This plan contains water quality objectives (WQOs) for coastal and interstate surface waters as well as enclosed bays and estuaries. The Facility discharges to San Pablo Bay, which the Thermal Plan defines as an enclosed bay. Requirements of this Order implement the Thermal Plan.

2. **National Toxics Rule (NTR) and California Toxics Rule (CTR).** USEPA adopted the NTR on December 22, 1992, and later amended it on May 4, 1995, and November 9, 1999. About forty criteria in the NTR applied in California. On May 18, 2000, USEPA adopted the CTR. The CTR promulgated new toxics criteria for California and, in addition, incorporated the previously adopted NTR criteria that applied in the State. The CTR was amended on February 13, 2001. These rules contain water quality criteria for priority toxic pollutants that apply to San Pablo Bay.

3. **State Implementation Policy.** On March 2, 2000, the State Water Board adopted the *Policy for Implementation of Toxics Standards for Inland Surface Waters, Enclosed Bays, and Estuaries of California* (hereinafter State Implementation Policy or SIP). The SIP became effective on April 28, 2000, with respect to the priority pollutant criteria USEPA promulgated for California through the NTR and to the priority pollutant objectives the Regional Water

Board established in the Basin Plan. The SIP became effective on May 18, 2000, with respect to the priority pollutant criteria USEPA promulgated through the CTR. On February 24, 2005, the State Water Board adopted amendments to the SIP that became effective on July 13, 2005. The SIP establishes implementation provisions for priority pollutant objectives and provisions for chronic toxicity control. Requirements of this Order implement the SIP.

4. **Alaska Rule.** On March 30, 2000, USEPA revised its regulation that specifies when new and revised State and tribal water quality standards (WQS) become effective for CWA purposes [65 Fed. Reg. 24641 (April 27, 2000) (codified at 40 CFR 131.21)]. Under the revised regulation (also known as the Alaska Rule), USEPA must approve any new and revised standards submitted to USEPA after May 30, 2000, before they can be used for CWA purposes. The final rule also provides that standards already in effect and submitted to USEPA by May 30, 2000, may be used for CWA purposes, whether or not approved by USEPA.

5. **Antidegradation Policy.** 40 CFR 131.12 requires that State water quality standards include an antidegradation policy consistent with the federal policy. The State Water Board established California's antidegradation policy through State Water Board Resolution 68-16, which incorporates the federal antidegradation policy where the federal policy applies under federal law. It also requires that existing water quality be maintained unless degradation is justified based on specific findings. The Regional Water Board's Basin Plan implements, and incorporates by reference, both the State and federal antidegradation policies. The permitted discharge must be consistent with the antidegradation provisions of 40 CFR 131.12 and State Water Board Resolution No. 68-16. Antidegradation is discussed further in Fact Sheet section IV.D.2.

6. **Anti-Backsliding Requirements.** CWA sections 402(o)(2) and 303(d)(4) and 40 CFR 122.44(l) prohibit backsliding in NPDES permits. These anti-backsliding provisions require that effluent limitations in a reissued permit be as stringent as those in the previous permits, with some exceptions where limitations may be relaxed. Some effluent limitations in this Order are less stringent than those in the previous permit. Anti-backsliding is discussed further in Fact Sheet section IV.D.1.

D. Impaired Water Bodies on CWA 303(d) List

In November 2006, the USEPA approved a revised list (hereinafter 303(d) list) of impaired water bodies prepared by the State pursuant to provisions of CWA section 303(d), which requires identification of specific water bodies where it is expected that water quality standards will not be met after implementation of technology-based effluent limitations on point sources. San Pablo Bay is listed as impaired by chlordane, DDT, dieldrin, dioxin compounds, exotic species, furan compounds, mercury, nickel, polychlorinated biphenyls (PCBs), dioxin-like PCBs, and selenium. The SIP requires final effluent limitations for all 303(d)-listed pollutants to be consistent with total maximum daily loads (TMDLs) and associated wasteload allocations. The Regional Water Board plans to adopt TMDLs for pollutants on the 303(d) list. On February 12, 2008, USEPA approved a TMDL for mercury for San Pablo Bay. On March 29, 2010, USEPA approved a TMDL for PCBs in San Pablo Bay. Regional Water Board Order No. R2-2007-0077 implements these TMDLs.

IV. RATIONALE FOR EFFLUENT LIMITATIONS AND DISCHARGE SPECIFICATIONS

The CWA requires point source dischargers to control the amount of conventional, non-conventional, and toxic pollutants discharged into waters of the United States. The control of pollutants discharged is

established through effluent limitations and other requirements in NPDES permits. There are two principal bases for effluent limitations in the NPDES regulations: 40 CFR 122.44(a) requires that permits include applicable technology-based limitations and standards, and 40 CFR 122.44(d) requires that permits include water quality-based effluent limitations (WQBELs) to attain and maintain applicable numeric and narrative water quality criteria to protect the beneficial uses of the receiving water.

A. Discharge Prohibitions

1. **Discharge Prohibition III.A (No discharge different from that described in this Order):** This prohibition is the same as in the previous permit and is based on 40CFR122.21(a), duty to apply, and CWC section 13260, which requires filing an application and Report of Waste Discharge before discharges can occur. Discharges not described in the permit application and Report of Waste Discharge, and subsequently in this Order, are prohibited.

2. **Discharge Prohibition III.B (No discharge of process wastewater without at least 37:1 dilution):** The ammonia WQBELs in this Order for discharge point 002 are based on a conservative estimate of the actual minimum initial dilution of 37:1 (see Fact Sheet section IV.C.4.a). These WQBELs would not be protective of water quality if the discharge did not actually achieve at least a 37:1 minimum initial dilution.

   This Order allows discharge of once-through cooling water from discharge point 003 and stormwater from discharge point 004 without a minimum initial dilution of at least 10:1. Basin Plan Table 4-1 prohibits the discharge of any wastewater that has particular characteristics of concern to beneficial uses at any point at which the wastewater does not receive an initial dilution of at least 10:1. Based on the factors described below, this prohibition does not apply to these discharges, and, even if it did, these discharges would qualify for an exception to the prohibition.

   As the Basin Plan indicates, discharges of treated sewage and other discharges where the treatment process is subject to upset contain particular characteristics of concern. The Basin Plan states, "This prohibition will…provide a buffer against the effects of abnormal discharges caused by temporary plant upsets or malfunctions… ." The dilution requirement is to provide a contingency in the event of temporary treatment plant malfunction and to minimize public contact with undiluted waste. However, the once-through cooling water and stormwater discharges do not contain treated sewage and are not subject to upset. Since the cooling water itself comes from San Pablo Bay (the receiving water), providing at least 10:1 initial dilution at the outfall would not dilute any chemical constituents in the cooling water. Therefore, the prohibition cannot apply.

   The only characteristic of concern in the once-through cooling water discharge is thermal waste. Cooling water is primarily used, via 45 heat exchangers, to cool Crude Unit 200 (25 heat exchangers), debutanizer Unit 215 (12 heat exchangers), and Crude Unit 267 (8 heat exchangers). It is then returned to San Pablo Bay at a temperature higher than the intake temperature. The Basin Plan, in addition to requiring that the receiving water temperature not be altered if doing so adversely affects beneficial uses, refers to regulation of thermal waste by the Thermal Plan. Compliance with the Thermal Plan is discussed in Section IV.C.4.l of this Fact Sheet. The other characteristics of potential concern are copper, nickel, zinc, and dioxin-TEQ. However, existing information suggests that the Discharger is not a substantial source of

these pollutants. Because most of the effluent flow is once-through cooling water, the copper, nickel, and dioxin-TEQ concentrations of the effluent essentially reflect the copper, nickel, and dioxin-TEQ concentrations of the receiving water. In fact, Provision IV.B.3 of this Order provides intake credits for copper, nickel, and dioxin-TEQ, as explained further in Fact Sheet sections IV.C.4.i.(1)-(2) and (4), and IV.C.4.k.

Even if Prohibition 1 were to apply, the Basin Plan provides for an exception where an "inordinate burden would be placed on the discharger relative to beneficial uses protected." The Discharger provided evidence in its November 12, 2010, letter *Response to Request for Additional Information for Permit Reissuance,* that construction of a deepwater outfall for this discharge would be inordinately burdensome relative to the beneficial uses protected, based on estimates of cost and the likely project complexity. The Basin Plan further states, "In reviewing requests for exceptions, the Regional Board will consider the reliability of the discharger's system in preventing inadequately treated wastewater from being discharged to the receiving water…." Because the system is very reliable and construction of a deepwater outfall would result in no dilution benefit, even if Prohibition 1 were to apply to this discharge, it would qualify for this exception.

3. **Discharge Prohibition III.C (No bypass or overflow of untreated or partially treated wastewaters):** This prohibition is retained from the previous permit and based on 40 CFR 122.41(m) (see federal Standard Provisions, Attachment D).

B. Technology-Based Effluent Limitations

1. Scope and Authority

CWA section 301(b) and 40 CFR 122.44(a) require that permits include technology-based effluent limitations based on several levels of control:

a. Best practicable treatment control technology (BPT) represents the average of the best performance by plants within an industrial category or subcategory. BPT standards apply to toxic, conventional, and non-conventional pollutants. Conventional pollutants include biochemical oxygen demand (BOD), total suspended solids (TSS), fecal coliform, pH, and oil and grease.

b. Best available technology economically achievable (BAT) represents the best existing performance of treatment technologies that are economically achievable within an industrial point source category. BAT standards apply to toxic and non-conventional pollutants.

c. Best conventional control technology (BCT) represents the control from existing industrial point sources of conventional pollutants. The BCT standard is established after considering the "cost reasonableness" of the relationship between the cost of attaining a reduction in effluent discharge and the benefits that would result, and also the cost effectiveness of additional industrial treatment beyond BPT.

d. New source performance standards (NSPS) represent the best available demonstrated control technology standards for new sources. The intent of NSPS guidelines is to set limitations that represent state-of-the-art treatment technology for new sources.

The CWA requires USEPA to develop effluent limitations, guidelines, and standards for many source categories representing application of BPT, BAT, BCT, and NSPS. The discharge authorized by this Order must meet the minimum federal technology-based requirements based on Effluent Limitations Guidelines (ELGs) for the Petroleum Refining Point Source Category (Cracking Subcategory) in 40 CFR 419.20 *et seq*. Because the Facility was constructed prior to 1982, when USEPA established the NSPS requirements, it is not subject to the NSPS requirements. It is, however, subject to the BPT, BAT, and BCT requirements in 40 CFR 419.

2. Technology-Based Effluent Limitations – Discharge Point 002

a. Process Wastewater Mass-Based Effluent Limitations

40 CFR 419 Subpart B requires that technology-based effluent limitations for Discharge Point 002 be derived based on refinery production (the total crude oil throughput of the Facility) and the treatment processes used. The Facility currently operates with a maximum crude oil throughput of 77,360 bbls/day. Attachment F-1 presents the derivation of the production-based effluent limitations based on 40 CFR 419 Subpart B.

b. Additional Effluent Limitation Allocations for Ballast Water and Contaminated Runoff

Because ballast water (e.g., cargo hold wash water) and contaminated runoff commingled with process wastewater are discharged through the same outfall as the process wastewater, this Order provides additional allocations that may be applied to the process wastewater limits. These allocations are in addition to the process wastewater mass-based limitations. The ballast water allocations are based on 40 CFR 419.22(c), 419.23(d), and 419.24(c); the contaminated runoff allocations are based on 40 CFR 419.22(e)(2), 419.23(f)(2), and 419.24(e)(2). Attachment F-1 further explains these additional effluent limitation allocations.

c. Basin Plan Technology-Based Effluent Limitation

This Order establishes an instantaneous maximum effluent limitation for residual chlorine of 0.0 mg/L based on Basin Plan section 4.5.5.1 (Table 4-2). This limit is retained from the previous permit.

3. Technology-Based Effluent Limitations – Discharge Point 003

This Order establishes a maximum daily effluent limitation for total organic carbon (TOC) of 5.0 mg/L at Discharge Point 003 based on 40 CFR 419.22(d) and 419.23(e). This limit is retained from the previous permit.

This Order establishes an instantaneous effluent limitation of 0.0 mg/L for total residual chlorine at Discharge Point 003 based on Basin Plan Table 4-2, which establishes this limit for all treatment facilities. Since the Discharger occasionally chlorinates and dechlorinates its once-through cooling water, this limitation applies to Discharge Point 003. This limit is retained from the previous permit.

4. Technology-Based Effluent Limitations – Discharge Point 004

This Order establishes single-sample effluent limitations for oil and grease and TOC at Discharge Point 004 based on 40 CFR 419.22(e)(1), 419.23(f)(1), and 419.24(e)(1) as follows:

Table F-9. Technology-Based Effluent Limitations for Discharge Point 004

Parameter	Units	Daily Maximum
TOC	mg/L	110
Oil and Grease	mg/L	15

Water quality-based effluent limitations for Discharge Point 004 for pH, Visible Oil, and Visible Color, are discussed at Fact Sheet section IV.C.4.m.

C. Water Quality-Based Effluent Limitations for Toxic Substances

1. Scope and Authority

a. 40 CFR 122.44(d)(1)(i) requires permits to include WQBELs for pollutants (including toxicity) that are or may be discharged at levels that cause, have reasonable potential to cause, or contribute to an excursion above any State water quality standard (Reasonable Potential). The process for determining Reasonable Potential and, when necessary, calculating WQBELs is intended to (1) protect the designated beneficial uses of the receiving water, and (2) achieve applicable WQOs in the CTR, NTR, and the Basin Plan.

b. NPDES regulations and the SIP provide the basis to establish Maximum Daily Effluent Limitations (MDELs).

i. NPDES Regulations. 40 CFR 122.45(d) states "For continuous discharges all permit effluent limitations, standards, and prohibitions, including those necessary to achieve water quality standards, shall *unless impracticable* be stated as maximum daily and average monthly discharge limitations for all discharges other than publicly owned treatment works."

ii. SIP. SIP section 1.4 requires that WQBELs be expressed as MDELs and average monthly effluent limitations (AMELs).

MDELs are used in this Order to protect against acute water quality effects. The MDELs are necessary for preventing fish kills or mortality to aquatic organisms.

2. Applicable Beneficial Uses and Water Quality Objectives

a. The Basin Plan implements State Water Board Resolution No. 88-63, which establishes State policy that all waters, with certain exceptions, should be considered suitable or potentially suitable for municipal or domestic supply (MUN). Because of the marine influence on receiving waters of San Francisco Bay, total dissolved solids levels in San Francisco Bay commonly (and often significantly) exceed 3,000 mg/L and thereby meet an exception to State Water Board Resolution No. 88-63. The designation MUN does not apply to San Pablo Bay. Beneficial uses applicable to San Pablo Bay are as follows:

Table F-10. Basin Plan Beneficial Uses

Discharge Point	Receiving Water Name	Beneficial Use(s)
002, 003, 004	San Pablo Bay	Industrial Service Supply (IND) Ocean, Commercial and Sport Fishing (COMM) Shellfish Harvesting (SHELL) Estuarine Habitat (EST) Fish Migration (MIGR) Preservation of Rare and Endangered Species (RARE) Fish Spawning (SPWN) Wildlife Habitat (WILD) Water Contact Recreation (REC1) Non-Contact Water Recreation (REC2) Navigation (NAV)

b. The WQOs applicable to the receiving waters for this discharge are from the Basin Plan; the CTR, established by USEPA at 40 CFR 131.38; and the NTR, established by USEPA at 40 CFR 131.36. Some pollutants have WQOs established by more than one of these three sources.

i. Basin Plan. The Basin Plan specifies numeric WQOs for 10 priority toxic pollutants, as well as narrative WQOs for toxicity and bioaccumulation in order to protect beneficial uses. The pollutants for which the Basin Plan specifies numeric objectives are arsenic, cadmium, hexavalent chromium, copper in freshwater, lead, mercury, nickel, silver, zinc, and cyanide. The Basin Plan's narrative toxicity objective (section 3.3.18) states in part, "All waters shall be maintained free of toxic substances in concentrations that are lethal to or that produce other detrimental responses in aquatic organisms." The bioaccumulation objective (section 3.3.2) states in part, "Controllable water quality factors shall not cause a detrimental increase in concentrations of toxic substances found in bottom sediments or aquatic life. Effects on aquatic organisms, wildlife, and human health will be considered."

ii. CTR. The CTR specifies numeric aquatic life criteria for 23 priority toxic pollutants and numeric human health criteria for 57 priority toxic pollutants. These criteria apply to all inland surface waters and enclosed bays and estuaries of the San Francisco Bay Region.

iii. NTR. The NTR establishes numeric aquatic life criteria for selenium, numeric aquatic life and human health criteria for cyanide, and numeric human health criteria for 34 other toxic organic pollutants for waters of San Francisco Bay upstream to, and including, Suisun Bay and the Delta. These NTR criteria apply to San Pablo Bay, the receiving water for Discharge Points 002, 003, and 004.

iv. Sediment Quality Objectives. The *Water Quality Control Plan for Enclosed Bays and Estuaries—Part 1, Sediment Quality* contains a narrative WQO: "Pollutants in sediments shall not be present in quantities that, alone or in combination, are toxic to benthic communities in bays and estuaries of California." This WQO is to be implemented by integrating three lines of evidence: sediment toxicity, benthic community condition, and sediment chemistry. The Policy requires that if the Regional

Water Board determines that a discharge has reasonable potential to cause or contribute to an exceedance of this WQO, it is to impose the WQO as a receiving water limit.

v. **Basin Plan Receiving Water Salinity Policy and Hardness.** The Basin Plan (like the CTR and the NTR) states that the salinity characteristics (i.e., freshwater vs. saltwater) of the receiving water shall be considered in determining the applicable WQO. Freshwater objectives shall apply to discharges to waters with salinities equal to or less than one part per thousand (ppt) at least 95 percent of the time. Saltwater objectives shall apply to discharges to waters with salinities equal to or greater than 10 ppt at least 95 percent of the time in a normal water year. For discharges to water with salinities in between these two categories, or tidally influenced freshwaters that support estuarine beneficial uses, the objectives shall be the lower of the salt or freshwater objectives (the latter calculated based on ambient hardness) for each substance.

The receiving water for Discharge Points 002, 003 and 004, San Pablo Bay, is an estuarine environment based on salinity data generated through the Regional Monitoring Program (RMP) at the Davis Point Station (BD40) sampling station between 1993 and 2001. In that period, the receiving water's minimum salinity was 0.0 ppt, its maximum salinity was 25.1 ppt, and its average salinity was 12.3 ppt. Because the salinity was between 1 and 10 ppt in 51 percent of receiving water samples, both the freshwater and saltwater Basin Plan, NTR, and CTR objectives apply to this discharge.

Some freshwater metal objectives are hardness dependent. Hardness data are collected through the RMP for water bodies in the San Francisco Bay region. A hardness value of 96 mg/L was used to determine the objectives for this Order. This is the adjusted geometric mean of the hardness values observed below 400 mg/L at the Davis Point Station between 1993 and 2001. This represents the best available information for the hardness of the receiving water after it has mixed with the deepwater discharge. For Discharge Point 003, a near shore, shallow water discharge, Discharger data indicate that the receiving water hardness ranges from 647 mg/L to 7,600 mg/L. A hardness value of 400 mg/L was used to calculate the freshwater metal objectives because this is the highest value allowed by the CTR, and receiving water data show that hardness values have always been higher.

vi. **Site-Specific Metal Translators.** 40 CFR 122.45(c) requires effluent limitations for metals to be expressed as total recoverable metal. Because water quality criteria for metals are typically expressed in the dissolved form, translators must be used to convert metals concentrations from dissolved to total recoverable and vice versa. In the CTR, USEPA establishes default translators; however, site-specific conditions, such as water temperature, pH, suspended solids, and organic carbon, affect the form of metal (dissolved, filterable, or otherwise) present and therefore available to cause toxicity. In general, the dissolved form is more available and more toxic to aquatic life than filterable forms. Site-specific translators can be developed to account for site-specific conditions, thereby preventing exceedingly stringent or under-protective water quality objectives.

For deepwater discharges to San Pablo Bay (Discharge Point 002), translators for copper and nickel are based on Basin Plan Table 7.2-2 and recommendations of the

Clean Estuary Partnership's *North of Dumbarton Bridge Copper and Nickel Development and Selection of Final Translators* (2005). These translators are shown in the table below:

Table F-11. Translators for Copper and Nickel for Deepwater Discharges North of Dumbarton Bridge

	Copper	Nickel
AMEL Translator	0.38	0.27
MDEL Translator	0.66	0.57

For discharges from Discharge Point 003, site-specific translators were applied to copper and nickel criteria based on those in the Discharger's February 24, 2010, report, *ConocoPhillips Translator Study Report*. These translators are shown in the table below:

Table F-12. Site-Specific Translators for Copper and Nickel for Discharge Point 003

	Copper	Nickel
AMEL Translator	0.59	0.57
MDEL Translator	0.84	0.78

Default translators from 40 CFR 131.38(b)(2), Table 2, were used to determine the need for and calculate WQBELs for all other metals.

3. Determining the Need for WQBELs

40 CFR 122.44(d)(1)(i) requires permits to include WQBELs for all pollutants (non-priority or priority) "which the Director determines are or may be discharged at a level which will cause, have the reasonable potential to cause, or contribute to an excursion above any narrative or numeric criteria within a State water quality standard" (i.e., which have "Reasonable Potential"). Assessing whether a pollutant has Reasonable Potential is the fundamental step in determining whether or not a WQBEL is required.

a. Reasonable Potential Analysis

Regional Water Board staff used the methods and procedures prescribed in SIP section 1.3 to analyze the effluent and background data and the nature of Facility operations to determine if each discharge has Reasonable Potential. The Reasonable Potential Analysis (RPA) compares the effluent data with numeric and narrative WQOs in the Basin Plan, NTR, and CTR.

b. Reasonable Potential Methodology

The RPA projects a maximum effluent concentration (MEC) for each pollutant based on existing data, while accounting for a limited data set and effluent variability. There are three triggers in determining Reasonable Potential.

i. The first trigger is activated if the MEC is greater than the lowest applicable WQO (MEC $\geq$ WQO), which has been adjusted, if appropriate, for pH, hardness, and

translator data. If the MEC is greater than the adjusted WQO, then that pollutant has Reasonable Potential, and a WQBEL is required.

ii. The second trigger is activated if the observed maximum ambient background concentration (B) is greater than the adjusted WQO (B > WQO) and the pollutant is detected in any of the effluent samples.

iii. The third trigger is activated if a review of other information determines that a WQBEL is required to protect beneficial uses, even though both MEC and B are less than the WQO. A limitation may be required under certain circumstances to protect beneficial uses.

c. Effluent Data

The RPA was based on the effluent monitoring data collected by the Discharger from January 2005 through March 2010 for most pollutants. For selenium at Discharge Point 003, the RPA was based on the effluent monitoring data the Discharger collected from January 2009 through March 2010. In a December 9, 2008, letter, the Discharger stated that it was transitioning from using Standard Method 3114B (Hydride Generation/Atomic Absorption Spectrometry) to USEPA Method 200.8 (Inductively Coupled Plasma - Mass Spectrometry), primarily because a study suggests it is possible to get significant positive interference with selenium in saline waters. Therefore, only data from USEPA Method 200.8 were used for purposes of the RPA.

d. Ambient Background Data

Ambient background values are used in the RPA and in the calculation of effluent limitations. For the RPA, ambient background concentrations are the observed maximum detected water column concentrations. The SIP states that, for calculating WQBELs, ambient background concentrations are either the observed maximum ambient water column concentrations or, for objectives intended to protect human health from carcinogenic effects, the arithmetic mean of observed ambient water concentrations. The RMP station at Yerba Buena Island, located in the Central Bay, has been monitored for most of the inorganic (CTR constituent numbers 1–15) and some of the organic (CTR constituent numbers 16–126) toxic pollutants, and these data were used as background data in performing this RPA.

The RMP has not analyzed all the constituents listed in the CTR. On May 15, 2003, a group of several San Francisco Bay Region dischargers (known as the Bay Area Clean Water Agencies, or BACWA) submitted a collaborative receiving water study, entitled the *San Francisco Bay Ambient Water Monitoring Interim Report*. This study includes monitoring results from sampling events in 2002 and 2003 for the remaining priority pollutants not monitored by the RMP. The RPA was conducted and the WQBELs were calculated using RMP data from 1993 through 2008 for inorganics and organics at the Yerba Buena Island RMP station, and additional data from the BACWA *Ambient Water Monitoring: Final CTR Sampling Update Report* for the Yerba Buena Island RMP station.

SIP section 1.4.3 allows background conditions to be determined on a discharge-by-discharge or water body-by-water body basis. A water body-by-water body approach is

taken here due to inherent uncertainties in characterizing ambient background conditions in a complex estuarine system on a discharge-by-discharge basis. The Yerba Buena Island RMP monitoring station, relative to other RMP stations, fits SIP guidance criteria for establishing background conditions. Taken together with restrictions on dilution credits (see section 4, below), a far-field background station is appropriate because San Francisco Bay is a very complex estuarine system with highly variable and seasonal upstream freshwater inflows and diurnal tidal saltwater inputs. The SIP requires that background water quality data be representative of the ambient receiving water that will mix with the discharge. Water quality data from the Yerba Buena Island monitoring station is representative of the water that will mix with the discharge.

e. RPA Determination

The MECs, most stringent applicable WQOs, and background concentrations used in the RPA are presented in the following tables for Discharge Points 002 and 003, along with the RPA results (yes or no) for each pollutant analyzed. Reasonable Potential was not determined for all pollutants because there are not applicable water quality objectives for all pollutants and monitoring data are unavailable for others. The pollutants that exhibit Reasonable Potential for Discharge Point 002 are copper, selenium, dioxin-TEQ, dichlorobromomethane, benzo(a)pyrene, benzo(b)fluoranthene, bis(2-ethylhexyl)phthalate, chrysene, dibenzo(a,h)anthracene, indeno(1,2,3-cd)pyrene, total PAHs, and total ammonia. The pollutants that exhibit Reasonable Potential for Discharge Point 003 are copper, nickel, selenium, zinc, and dioxin-TEQ.

Table F-13. Summary of RPA Results – Discharge Point 002

CTR #	Priority Pollutants	MEC or Minimum DL [1],[2] (µg/L)	Governing WQO/WQC (µg/L)	Maximum Background or Minimum DL [1],[2] (µg/L)	RPA Results [3]
1	Antimony	1.2	4300	1.8	No
2	Arsenic	24	36	2.46	No
3	Beryllium	<0.04	No Criteria	0.215	Ud
4	Cadmium	0.2	1.1	0.13	No
5a	Chromium (III)	1.9	201	4.4	No
5b	Hexavalent Chromium	1.9	11	4.4	No
6	Copper	67	14.2	2.549	Yes[4]
7	Lead	2	3.0	0.804	No
8	Mercury (303d listed)	0.108	[5]	0.0086	[6]
9	Nickel (303d listed)	12	30	3.73	No
10	Selenium (303d listed)	75	5	0.39	Yes
11	Silver	<0.009	2.2	0.052	No
12	Thallium	<0.006	6.3	0.21	No
13	Zinc	14	86	5.092	No
14	Cyanide	<2	2.9	<0.4	No
15	Asbestos	Not Available	No Criteria	Not Available	Ud
16	2,3,7,8-TCDD (303d listed)	<0.0639	1.4E-08	8.2E-09	No
	Dioxin TEQ (303d listed)	1.50E-08	1.4E-08	5.32E-08	Yes
17	Acrolein	<0.5	780	<0.5	No
18	Acrylonitrile	<0.33	0.66	0.03	No
19	Benzene	<0.03	71	<0.05	No
20	Bromoform	7.4	360	<0.5	No
21	Carbon Tetrachloride	<0.04	4.4	0.06	No

CTR #	Priority Pollutants	MEC or Minimum DL [1],[2] (µg/L)	Governing WQO/WQC (µg/L)	Maximum Background or Minimum DL [1],[2] (µg/L)	RPA Results [3]
22	Chlorobenzene	<0.03	21000	<0.5	No
23	Chlorodibromomethane	31	34	<0.05	No
24	Chloroethane	<0.03	No Criteria	<0.5	Ud
25	2-Chloroethylvinyl ether	<0.1	No Criteria	<0.5	Ud
26	Chloroform	56	No Criteria	<0.5	Ud
27	Dichlorobromomethane	47	46	<0.05	Yes
28	1,1-Dichloroethane	<0.04	No Criteria	<0.05	Ud
29	1,2-Dichloroethane	<0.04	99	0.04	No
30	1,1-Dichloroethylene	<0.06	3.2	<0.5	No
31	1,2-Dichloropropane	<0.03	39	<0.05	No
32	1,3-Dichloropropylene	<0.06	1700	<0.5	No
33	Ethylbenzene	<0.04	29000	<0.5	No
34	Methyl Bromide	0.05	4000	<0.5	No
35	Methyl Chloride	<0.04	No Criteria	<0.5	Ud
36	Methylene Chloride	0.3	1600	22	No
37	1,1,2,2-Tetrachloroethane	<0.04	11	<0.05	No
38	Tetrachloroethylene	<0.04	8.85	<0.05	No
39	Toluene	<0.06	200000	<0.3	No
40	1,2-Trans-Dichloroethylene	<0.05	140000	<0.5	No
41	1,1,1-Trichloroethane	<0.03	No Criteria	<0.5	Ud
42	1,1,2-Trichloroethane	<0.05	42	<0.05	No
43	Trichloroethylene	<0.05	81	<0.5	No
44	Vinyl Chloride	<0.05	525	<0.5	No
45	2-Chlorophenol	<0.7	400	<1.2	No
46	2,4-Dichlorophenol	<0.7	790	<1.3	No
47	2,4-Dimethylphenol	<0.8	2300	<1.3	No
48	2-Methyl- 4,6-Dinitrophenol	<0.6	765	<1.2	No
49	2,4-Dinitrophenol	<0.6	14000	<0.7	No
50	2-Nitrophenol	<0.6	No Criteria	<1.3	Ud
51	4-Nitrophenol	<0.6	No Criteria	<1.6	Ud
52	3-Methyl 4-Chlorophenol	<0.6	No Criteria	<1.1	Ud
53	Pentachlorophenol	<0.6	7.9	<1	No
54	Phenol	<0.005	4600000	<1.3	No
55	2,4,6-Trichlorophenol	<0.6	6.5	<1.3	No
56	Acenaphthene	<0.028	2700	0.00193	No
57	Acenaphthylene	0.4	No Criteria	0.001285	Ud
58	Anthracene	1.1	110000	0.000592	No
59	Benzidine	<1	0.00054	<0.0015	No
60	Benzo(a)Anthracene	<0.019	0.049	0.005315	No
61	Benzo(a)Pyrene	1.6	0.049	0.00333	Yes
62	Benzo(b)Fluoranthene	0.9	0.049	0.00459	Yes
63	Benzo(ghi)Perylene	0.6	No Criteria	0.004544	Ud
64	Benzo(k)Fluoranthene	<0.02	0.049	0.00177	No
65	Bis(2-Chloroethoxy)Methane	<0.7	No Criteria	<0.3	Ud
66	Bis(2-Chloroethyl)Ether	<0.7	1.4	<0.0002	No
67	Bis(2-Chloroisopropyl)Ether	<0.6	170000	Not Available	No
68	Bis(2-Ethylhexyl)Phthalate	34	5.9	<0.7	Yes
69	4-Bromophenyl Phenyl Ether	<0.4	No Criteria	<0.23	Ud
70	Butylbenzyl Phthalate	<0.6	5200	0.0056	No
71	2-Chloronaphthalene	<0.6	4300	<0.3	No
72	4-Chlorophenyl Phenyl Ether	<0.2	No Criteria	<0.3	Ud

CTR #	Priority Pollutants	MEC or Minimum DL [1],[2] (µg/L)	Governing WQO/WQC (µg/L)	Maximum Background or Minimum DL [1],[2] (µg/L)	RPA Results [3]
73	Chrysene	5.4	0.049	0.002781	Yes
74	Dibenzo(a,h)Anthracene	1	0.049	0.00064	Yes
75	1,2-Dichlorobenzene	<0.03	17000	<0.3	No
76	1,3-Dichlorobenzene	<0.03	2600	<0.3	No
77	1,4-Dichlorobenzene	<0.04	2600	<0.3	No
78	3,3 Dichlorobenzidine	<0.6	0.077	<0.001	No
79	Diethyl Phthalate	8.2	120000	<0.21	No
80	Dimethyl Phthalate	<0.6	2900000	<0.21	No
81	Di-n-Butyl Phthalate	<0.6	12000	0.016	No
82	2,4-Dinitrotoluene	<0.6	9.1	<0.27	No
83	2,6-Dinitrotoluene	<0.5	No Criteria	<0.29	Ud
84	Di-n-Octyl Phthalate	<0.7	No Criteria	<0.38	Ud
85	1,2-Diphenylhydrazine	<0.6	0.54	0.0037	No
86	Fluoranthene	0.9	370	0.0109	No
87	Fluorene	1	14000	0.00208	No
88	Hexachlorobenzene	<0.7	0.00077	0.0000221	No
89	Hexachlorobutadiene	<0.7	50	<0.3	No
90	Hexachlorocyclopentadiene	<0.8	17000	<0.3	No
91	Hexachloroethane	<0.6	8.9	<0.2	No
92	Indeno(1,2,3-cd)Pyrene	0.3	0.049	0.00398	Yes
93	Isophorone	<0.5	600	<0.3	No
94	Naphthalene	2	No Criteria	0.01262	Ud
95	Nitrobenzene	<0.7	1900	<0.25	No
96	N-Nitrosodimethylamine	<0.6	8.1	<0.3	No
97	N-Nitrosodi-n-Propylamine	<0.6	1.4	<0.001	No
98	N-Nitrosodiphenylamine	<0.6	16	<0.001	No
99	Phenanthrene	3.2	No Criteria	0.00951	Ud
100	Pyrene	1.6	11000	0.0194	No
101	1,2,4-Trichlorobenzene	<0.8	No Criteria	<0.3	Ud
102	Aldrin	<0.002	0.00014	0.00000285	No
103	Alpha-BHC	<0.002	0.013	0.000496	No
104	beta-BHC	<0.002	0.046	0.000413	No
105	gamma-BHC	<0.002	0.063	0.000703	No
106	delta-BHC	<0.002	No Criteria	0.000053	Ud
107	Chlordane (303d listed)	<0.02	0.00059	0.000178	No
108	4,4'-DDT (303d listed)	<0.002	0.00059	0.000167	No
109	4,4'-DDE (linked to DDT)	<0.003	0.00059	0.000693	No
110	4,4'-DDD	<0.002	0.00084	0.000313	No
111	Dieldrin (303d listed)	<0.002	0.00014	0.000264	No
112	Alpha-Endosulfan	<0.002	0.0087	0.000031	No
113	beta-Endolsulfan	<0.002	0.0087	0.000069	No
114	Endosulfan Sulfate	<0.002	240	0.0000819	No
115	Endrin	<0.002	0.0023	0.00004	No
116	Endrin Aldehyde	<0.002	0.81	Not Available	No
117	Heptachlor	<0.003	0.00021	0.000019	No
118	Heptachlor Epoxide	<0.002	0.00011	0.000094	No
119-125	PCBs sum (303d listed)	<0.02	0.00017	0.00146	[6]
126	Toxaphene	<0.15	0.0002	Not Available	No
	Tributyltin	Not Available	0.0074	0.00222	No
	Total PAHs	18.11	15	0.0841	Yes
	Total Ammonia (mg/L)	19.4	1.27	0.2	Yes

[1] The MEC or maximum background concentration is the actual detected concentration unless there is a "<" sign before it, in which case the value shown is the minimum detection level.

[2] The MEC or maximum background concentration is "Not Available" when there are no monitoring data for the constituent.

[3] RPA Results = Yes, if MEC => WQO/WQC, or B > WQO/WQC and MEC is detected;
= No, if MEC and B are < WQO/WQC or all effluent data are undetected;
= Undetermined (Ud), if no criteria have been promulgated;
= Cannot Determine, if there are insufficient data.

[4] Basin Plan section 7.2.2.2 requires that individual NPDES permits for municipal and industrial wastewater treatment facilities include copper WQBELs.

[5] A Basin Plan amendment approved by the State Water Board on July 17, 2007, added two new mercury water quality objectives; 0.2 mg mercury per kg fish tissue (average wet weight concentration measured in the muscle tissue of fish large enough to be consumed by humans) and 0.03 mg mercury per kg fish (average wet weight concentration) in small fish (3–5 cm in length) commonly consumed by the California least tern, an endangered species. The new objectives apply to all segments of San Francisco Bay, including all marine and estuarine waters contiguous to San Francisco Bay. and replace the water column four-day average marine mercury objective of 0.025 µg/L, which no longer applies to San Francisco Bay waters.

[6] SIP section 1.3 excludes from its RPA procedure priority pollutants for which a TMDL has been developed. TMDLs have been developed for mercury and PCBs in San Francisco Bay. Mercury and PCBs from wastewater discharges are regulated by NPDES Permit No. CA0038849 (currently Regional Water Board Order No. R2-2007-0077), which implements the San Francisco Bay Mercury and PCB TMDLs.

Table F-14. Summary of RPA Results – Discharge Point 003

CTR #	Priority Pollutants	MEC or Minimum DL [1],[2] (µg/L)	Governing WQO/WQC (µg/L)	Maximum Background or Minimum DL [1],[2] (µg/L)	RPA Results [3]
1	Antimony	1.2	4300	1.8	No
2	Arsenic	32	36	2.46	No
3	Beryllium	0.3	No Criteria	0.215	Ud
4	Cadmium	0.15	3.37	0.13	No
5a	Chromium (III)	97.5	644	4.4	No
5b	Hexavalent Chromium	<1.7	11	4.4	No
6	Copper	18	10.2	2.549	Yes[4]
7	Lead	8.4	8.5	0.804	No
8	Mercury (303d listed)	0.015	[5]	0.0086	[6]
9	Nickel (303d listed)	41	14	3.73	Yes
10	Selenium (303d listed)	2	5	0.39	No
11	Silver	<0.03	2.2	0.052	No
12	Thallium	<0.03	6.3	0.21	No
13	Zinc	120	86	5.092	Yes
14	Cyanide	<5	2.9	<4	No
15	Asbestos	Not Available	No Criteria	Not Available	Ud
16	2,3,7,8-TCDD (303d listed)	<0.0639	1.4E-08	8.2E-09	No
	Dioxin TEQ (303d listed)	2.53E-08	1.4E-08	7.1E-08	Yes
17	Acrolein	<0.5	780	<0.5	No
18	Acrylonitrile	<0.33	0.66	0.03	No
19	Benzene	<0.03	71	<0.05	No
20	Bromoform	<0.03	360	<0.5	No
21	Carbon Tetrachloride	<0.04	4.4	0.06	No
22	Chlorobenzene	<0.03	21000	<0.5	No
23	Chlorodibromomethane	<0.07	34	<0.05	No
24	Chloroethane	<0.03	No Criteria	<0.5	Ud
25	2-Chloroethylvinyl ether	<0.1	No Criteria	<0.5	Ud
26	Chloroform	0.5	No Criteria	<0.5	Ud
27	Dichlorobromomethane	<0.06	46	<0.05	No

CTR #	Priority Pollutants	MEC or Minimum DL [1],[2] (µg/L)	Governing WQO/WQC (µg/L)	Maximum Background or Minimum DL [1],[2] (µg/L)	RPA Results [3]
28	1,1-Dichloroethane	<0.04	No Criteria	<0.05	Ud
29	1,2-Dichloroethane	<0.04	99	0.04	No
30	1,1-Dichloroethylene	<0.06	3.2	<0.5	No
31	1,2-Dichloropropane	<0.03	39	<0.05	No
32	1,3-Dichloropropylene	<0.03	1700	<0.5	No
33	Ethylbenzene	<0.06	29000	<0.5	No
34	Methyl Bromide	<0.05	4000	<0.5	No
35	Methyl Chloride	<0.04	No Criteria	<0.5	Ud
36	Methylene Chloride	0.2	1600	22	No
37	1,1,2,2-Tetrachloroethane	<0.04	11	<0.05	No
38	Tetrachloroethylene	<0.06	8.55	<0.05	No
39	Toluene	0.3	200000	<0.3	No
40	1,2-Trans-Dichloroethylene	<0.05	140000	<0.5	No
41	1,1,1-Trichloroethane	<0.03	No Criteria	<0.5	Ud
42	1,1,2-Trichloroethane	<0.05	42	<0.05	No
43	Trichloroethylene	0.06	81	<0.5	No
44	Vinyl Chloride	<0.05	525	<0.5	No
45	2-Chlorophenol	<0.98	400	<1.2	No
46	2,4-Dichlorophenol	<0.9	790	<1.3	No
47	2,4-Dimethylphenol	<0.87	2300	<1.3	No
48	2-Methyl- 4,6-Dinitrophenol	<0.91	765	<1.2	No
49	2,4-Dinitrophenol	<0.83	14000	<0.7	No
50	2-Nitrophenol	<0.89	No Criteria	<1.3	Ud
51	4-Nitrophenol	<0.83	No Criteria	<1.6	Ud
52	3-Methyl 4-Chlorophenol	<0.91	No Criteria	<1.1	Ud
53	Pentachlorophenol	<0.81	7.9	<1	No
54	Phenol	<0.69	4600000	<1.3	No
55	2,4,6-Trichlorophenol	<0.97	6.5	<1.3	No
56	Acenaphthene	<0.028	2700	0.00193	No
57	Acenaphthylene	<0.019	No Criteria	0.001285	Ud
58	Anthracene	<0.028	110,000	0.000592	No
59	Benzidine	<1	0.00054	<0.0015	No
60	Benzo(a)Anthracene	<0.019	0.049	0.005315	No
61	Benzo(a)Pyrene	<0.019	0.049	0.00333	No
62	Benzo(b)Fluoranthene	<0.028	0.049	0.00459	No
63	Benzo(ghi)Perylene	<0.028	No Criteria	0.004544	Ud
64	Benzo(k)Fluoranthene	<0.03	0.049	0.00177	No
65	Bis(2-Chloroethoxy)Methane	<0.8	No Criteria	<0.3	Ud
66	Bis(2-Chloroethyl)Ether	<0.7	1.4	<0.3	No
67	Bis(2-Chloroisopropyl)Ether	<0.7	170000	Not Available	No
68	Bis(2-Ethylhexyl)Phthalate	<0.5	5.9	<0.000151	No
69	4-Bromophenyl Phenyl Ether	<0.97	No Criteria	<0.23	Ud
70	Butylbenzyl Phthalate	<0.98	5200	0.0056	No
71	2-Chloronaphthalene	<0.6	4300	<0.3	No
72	4-Chlorophenyl Phenyl Ether	<0.99	No Criteria	<0.3	Ud
73	Chrysene	<0.03	0.049	0.002781	No
74	Dibenzo(a,h)Anthracene	<0.028	0.049	0.00064	No
75	1,2-Dichlorobenzene	<0.03	17000	<0.3	No
76	1,3-Dichlorobenzene	<0.03	2600	<0.3	No
77	1,4-Dichlorobenzene	<0.04	2600	<0.3	No
78	3,3 Dichlorobenzidine	<0.6	0.077	<0.001	No

CTR #	Priority Pollutants	MEC or Minimum DL [1],[2] (µg/L)	Governing WQO/WQC (µg/L)	Maximum Background or Minimum DL [1],[2] (µg/L)	RPA Results [3]
79	Diethyl Phthalate	<0.86	120000	<0.21	No
80	Dimethyl Phthalate	<0.6	2900000	<0.21	No
81	Di-n-Butyl Phthalate	<0.6	12000	0.016	No
82	2,4-Dinitrotoluene	<0.9	9.1	<0.27	No
83	2,6-Dinitrotoluene	<0.5	No Criteria	<0.29	Ud
84	Di-n-Octyl Phthalate	<0.7	No Criteria	<0.38	Ud
85	1,2-Diphenylhydrazine	<0.9	0.54	0.0037	No
86	Fluoranthene	<0.028	370	0.0109	No
87	Fluorene	<0.028	14000	0.00208	No
88	Hexachlorobenzene	<0.8	0.00077	0.0000221	No
89	Hexachlorobutadiene	<0.8	50	<0.3	No
90	Hexachlorocyclopentadiene	<0.8	17000	<0.3	No
91	Hexachloroethane	<0.9	8.9	<0.2	No
92	Indeno(1,2,3-cd)Pyrene	<0.028	0.049	0.00398	No
93	Isophorone	<0.5	600	<0.3	No
94	Naphthalene	0.019	No Criteria	0.01262	Ud
95	Nitrobenzene	<0.7	1900	<0.25	No
96	N-Nitrosodimethylamine	<0.6	8.1	<0.3	No
97	N-Nitrosodi-n-Propylamine	<0.8	1.4	<0.001	No
98	N-Nitrosodiphenylamine	<0.6	16	<0.001	No
99	Phenanthrene	<0.028	No Criteria	0.00951	Ud
100	Pyrene	<0.028	11000	0.0194	No
101	1,2,4-Trichlorobenzene	<0.98	No Criteria	<0.3	Ud
102	Aldrin	<0.002	0.00014	0.00000285	No
103	Alpha-BHC	<0.002	0.013	0.000496	No
104	beta-BHC	<0.002	0.046	0.000413	No
105	gamma-BHC	<0.002	0.063	0.000703	No
106	delta-BHC	<0.002	No Criteria	0.000053	Ud
107	Chlordane (303d listed)	<0.02	0.00059	0.000178	No
108	4,4'-DDT (303d listed)	<0.002	0.00059	0.000167	No
109	4,4'-DDE (linked to DDT)	<0.003	0.00059	0.000693	No
110	4,4'-DDD	<0.002	0.00084	0.000313	No
111	Dieldrin (303d listed)	<0.002	0.00014	0.000264	No
112	Alpha-Endosulfan	<0.002	0.0087	0.000031	No
113	beta-Endolsulfan	<0.002	0.0087	0.000069	No
114	Endosulfan Sulfate	<0.002	240	0.0000819	No
115	Endrin	<0.002	0.0023	0.00004	No
116	Endrin Aldehyde	<0.002	0.81	Not Available	No
117	Heptachlor	<0.003	0.00021	0.000019	No
118	Heptachlor Epoxide	<0.002	0.00011	0.000094	No
119-125	PCBs sum (303d listed)	<0.03	0.00017	0.00146	[6]
126	Toxaphene	<0.15	0.0002	Not Available	No
	Tributyltin	Not Available	0.0074	0.00222	No
	Total PAHs	<0.019	15	0.0841	No
	Total Ammonia (mg/L)	<0.05	1.27	0.2	No

[1] The MEC or maximum background concentration is the actual detected concentration unless there is a "<" sign before it, in which case the value shown is the minimum detection level.

[2] The MEC or maximum background concentration is "Not Available" when there are no monitoring data for the constituent.

[3] RPA Results = Yes, if MEC > WQO/WQC, or B > WQO/WQC and MEC is detected;
= No, if MEC and B are < WQO/WQC or all effluent data are undetected;
= Undetermined (Ud), if no criteria have been promulgated;
= Cannot Determine, if there are insufficient data.

[4] Basin Plan section 7.2.2.2 requires that individual NPDES permits for municipal and industrial wastewater treatment facilities include copper WQBELs

[5] A Basin Plan amendment approved by the State Water Board on July 17, 2007, added two new mercury water quality objectives; 0.2 mg mercury per kg fish tissue (average wet weight concentration measured in the muscle tissue of fish large enough to be consumed by humans) and 0.03 mg mercury per kg fish (average wet weight concentration) in small fish (3–5 cm in length) commonly consumed by the California least tern, an endangered species. The new objectives apply to all segments of San Francisco Bay, including all marine and estuarine waters contiguous to San Francisco Bay. and replace the water column four-day average marine mercury objective of 0.025 µg/L, which no longer applies to San Francisco Bay waters.

[6] SIP section 1.3 excludes from its RPA procedure priority pollutants for which a TMDL has been developed. TMDLs have been developed for mercury and PCBs in San Francisco Bay. These TMDLs do not identify once-through cooling water as a source of these pollutants because once-through cooling water delivers no net load of them to San Francisco Bay. Any mercury or PCBs discharged to San Francisco Bay in once-through cooling water is simply the same mercury or PCBs present in influent once-through cooling water. Therefore, the discharge of once-through cooling water at Discharge Point 003 has no reasonable potential to cause or contribute to an exceedance of the mercury or PCBs water quality objectives.

(1) Constituents with limited data. The Discharger has performed sampling and analysis for the constituents listed in the CTR. This data set was used to perform the RPA. In some cases, Reasonable Potential cannot be determined because effluent data are limited or ambient background concentrations are unavailable. The Discharger will continue to monitor for these constituents in the effluent using analytical methods that provide the best feasible detection limits. When additional data become available, further RPA will be conducted to determine whether to add numeric effluent limitations to this Order or to continue monitoring.

(2) Pollutants with no Reasonable Potential. WQBELs are not included in this Order for constituents that do not demonstrate Reasonable Potential; however, monitoring for such pollutants is still required. If concentrations of these constituents are found to have increased significantly, Provision VI.C.2.a of this Order requires the Discharger to investigate the source of the increase. Remedial measures are required if the increase poses a threat to water quality.

f. RPA Determination for Sediment Quality Objectives

Pollutants in some receiving water sediments may be present in quantities that, alone or in combination, are toxic to benthic communities. Efforts are underway to identify stressors causing such conditions. However, to date there is no evidence directly linking compromised sediment conditions to the discharges subject to this Order; therefore, the Regional Water Board cannot draw a conclusion about reasonable potential for the discharges to cause or contribute to exceedances of the sediment quality objectives. Nevertheless, the Discharger continues to participate in the RMP, which monitors San Francisco Bay sediment and seeks to identify stressors responsible for degraded sediment quality. Thus far, the monitoring has provided only limited information about potential stressors and sediment transport. The Regional Water Board is exploring appropriate

requirements to impose on the Discharger, along with other dischargers in the region, to obtain additional information that may inform future RPAs.

4. WQBEL Calculations

WQBELs were developed for the toxic and priority pollutants determined to have Reasonable Potential. The WQBELs were calculated based on appropriate WQOs and the procedures in SIP section 1.4.

a. Dilution Credits

Based on the Entrix, Inc. study *Field Dye Tracer Studies and Initial Dilution Modeling of the Process Wastewater Effluent from the UNOCAL San Francisco Refinery Diffuser NPDES Permit No. CA0005053*, dated December 1989, the Discharger indicates that the diffuser at Discharge Point 002 achieves a probable minimum initial dilution of 37:1 at the maximum design flow of 10 MGD, and 42:1 at 2.0 MGD. These dilution ratios are conservative, estimated to be those with a one percent probability of occurring at slack tide. The flows at Discharge Point 002 from 2005 through 2010 average 2.8 MGD (dry weather), with a maximum daily average flow of 8.89 MGD (wet weather). Based on these rates, the 37:1 is justified, but the 42:1 is not reliable and not used in the following effluent limit calculations.

The SIP provides the basis for dilution credits. Pursuant to SIP section 1.4.2.1, "Dilution credit may be limited or denied on a pollutant-by-pollutant basis…." Due to the near shore locations of Discharge Points 003 and 004, no dilution credits are provided. The bases for dilution credits at Discharge Point 002 are explained below.

(1) Bioaccumulative Pollutants: For certain bioaccumulative pollutants, dilution credit is significantly restricted or denied. This determination is based on available data on concentrations of these pollutants in aquatic organisms, sediment, and the water column. Specifically, these pollutants include chlordane, DDT, dieldrin, dioxin and furan compounds, nickel, and selenium, which all appear on the CWA section 303(d) list for San Pablo Bay because they impair San Pablo Bay's beneficial uses.

(a) Bioaccumulative Pollutants, Excluding Selenium

Tissue samples taken from fish in San Francisco Bay show the presence of these pollutants at concentrations greater than screening levels (*Contaminant Concentrations in Fish from San Francisco Bay*, San Francisco Estuary Institute, May 1997). The results of the 1994 San Francisco Bay pilot study, presented in *Contaminated Levels in Fish Tissue from San Francisco Bay* (Regional Water Board, 1994) also showed elevated levels of chemical contaminants in fish tissues. The Office of Environmental Health and Hazard Assessment completed a preliminary review of the data in the 1994 report and subsequently issued an interim consumption advisory covering certain fish species in San Francisco Bay due to the levels of some of these pollutants, including dioxins and pesticides (e.g., DDT). This advisory is still in effect. Therefore, dilution credits are denied for bioaccumulative pollutants on the 303(d) list for which there is lack of data on

sources and significant uncertainty about how different sources of these pollutants contribute to bioaccumulation.

(b) Selenium

For selenium, San Francisco Bay waterfowl tissue data presented in the State Water Board and California Department of Fish and Game's *Selenium Verification Study*, 1988-1990 (Document 91-2-WQ, May 1991) showed elevated selenium levels in the livers of waterfowl that feed on bottom-dwelling organisms, such as clams. In addition, the Office of Environmental Health and Hazard Assessment issued an advisory in 1987 for consumption of two species of North Bay diving ducks found to have high tissue levels of selenium. This advisory is still in effect. Elevated selenium levels have also been found in the tissue of white sturgeon, which also feed on clams.

This information, together with high uncertainty regarding how different sources of selenium contribute to bioaccumulation, has previously led the Regional Water Board to deny dilution credit for selenium. However, since the last permit reissuance, substantially more information has been generated to advance development of a TMDL for selenium in north San Francisco Bay segments. Based on this preliminary information, limited dilution credit for selenium is granted, but only to a level where existing treatment performance is maintained until completion of the selenium TMDL, after which time the Regional Water Board will amend the limits to be consistent with the TMDL wasteload allocations. Granting dilution credit for selenium is appropriate only because of the substantial amount of new information that has been generated that does not apply to any other pollutant. Therefore, this Order uses a dilution credit of D = 9 (10:1 dilution) to calculate selenium WQBELs. Using this dilution will maintain existing performance, because it is the same dilution granted in the previous permit, as amended by Order No. R2-2010-0057.

(2) Non-Bioaccumlative Pollutants: SIP section 1.4.2 allows for limiting the dilution credit. For most non-bioaccumulative pollutants, dilution credit is restricted.

(a) Non-Bioaccumlative Pollutants, Excluding Ammonia

For non-bioaccumulative pollutants (except ammonia), a conservative dilution credit of 10:1 (D = 9) has been assigned for Discharge Point 002 to address uncertainties with mixing. The 10:1 dilution credit is consistent with the previous permit and is also based, in part, on Basin Plan Prohibition 1 (Basin Plan Table 4-1), which prohibits discharges with less than 10:1 dilution.

Based on RMP monitoring data for San Francisco Bay, there is variability in the receiving water, and the hydrology of the receiving water is very complex. Therefore, it is uncertain how representative the ambient background data used to determine the effluent limitations is. Models used to predict dilution have not considered the three dimensional nature of San Francisco Bay currents resulting from the interaction of tidal flushes and seasonal fresh water outflows. Being heavier and colder than fresh water, ocean salt water enters San Francisco Bay on

twice-daily tidal cycles, generally beneath the warmer fresh water that flows seaward. When these waters mix and interact, complex circulation patterns occur due to the varying densities of the fresh and ocean waters. The complex patterns occur throughout San Francisco Bay, but are most prevalent in the San Pablo Bay, Carquinez Straight, and Suisun Bay areas. The locations of this mixing and interaction change, depending on the strength of each tide. Additionally, sediment loads from the Central Valley change on a long-term basis, affecting the depth of different parts of San Francisco Bay, resulting in alteration of flow patterns, mixing, and dilution at the outfall.

(b) Ammonia

For ammonia, a non-persistent pollutant, a conservative estimate of actual initial dilution was used to calculate the effluent limitations for Discharge Point 002. This is justified because ammonia quickly disperses and degrades to a non-toxic state, and cumulative toxicity effects are unlikely. As described above, the 1989 field dye tracer studies and initial dilution modeling estimated an actual initial dilution ratio with a 1 percent probability of occurring to be 37:1 (D = 36) at the maximum design flow rate of 10 MGD. For this Order, the 37:1 dilution ratio was used for calculating WQBELs based on both the acute and chronic objectives. To ensure that the 1989 study and modeling results are still valid, this Order requires the Discharger to update the study and modeling (see Provision VI.C.2.g of this Order).

b. Calculation of Pollutant-Specific WQBELs - Discharge Point 002

(1) Copper

(a) *Copper WQOs*. The most stringent applicable WQOs for copper are the Basin Plan site-specific chronic and acute marine WQOs, 6.0 and 9.4 micrograms per liter (µg/L), respectively, expressed as dissolved metal. Converting these WQOs to total recoverable metal using site-specific translators of 0.38 (chronic) and 0.67 (acute) results in a chronic WQC of 16 µg/L and an acute WQC of 14 µg/L.

(b) *RPA Results*. This Order establishes effluent limitations for copper because the MEC of 67 µg/L exceeds the most stringent applicable WQO for this pollutant, demonstrating Reasonable Potential by Trigger 1. In addition, Basin Plan section 7.2.2.2 requires that individual NPDES permits for municipal and industrial wastewater treatment facilities include copper WQBELs.

(c) C*opper WQBELs*. WQBELs for copper, calculated according to SIP procedures using a coefficient of variation (CV) of 0.95 and a dilution credit of D = 9, are an AMEL of 48 µg/L and an MDEL of 120 µg/L. Order No. R2-2010-0056, which amended the previous permit, contained an AMEL of 60 µg/L and an MDEL of 120 µg/L. Therefore, this Order establishes the more stringent limits.

(d) *Feasibility of Compliance*. Statistical analysis of effluent data for copper collected over the period of January 2005 through March 2010 shows that the 95th percentile (30 µg/L) is less than the AMEL (48 µg/L); the 99th percentile (50 µg/L) is less than the MDEL (120 µg/L); and the mean (2.1 µg/L) is less than the long term

average of the projected lognormal distribution of the effluent data set after accounting for effluent variability (25 µg/L). Therefore, immediate compliance with these effluent limitations is feasible.

(e) *Anti-backsliding*. Anti-backsliding requirements are satisfied because the WQBELs are no less stringent than those in the previous permit as amended.

(2) Selenium

(a) *Selenium WQC.* The most stringent applicable WQC for selenium are the NTR saltwater and freshwater aquatic life acute criterion of 20 µg/L and chronic criterion of 5.0 µg/L.

(b) *RPA Results.* This Order establishes effluent limitations for selenium because the MEC of 47 µg/L exceeds the most stringent applicable WQC for this pollutant, demonstrating Reasonable Potential by Trigger 1.

(c) *Selenium WQBELs.* WQBELs for selenium, calculated according to SIP procedures using a CV of 0.66 and a dilution credit of D = 9, are an AMEL of 37 µg/L and an MDEL of 78 µg/L. Order No. R2-2010-0057, which amended the previous permit, contained an AMEL of 37 µg/L and an MDEL of 50 µg/L. Therefore, this Order retains the more stringent previous limits.

(d) *Feasibility of Compliance*. Statistical analysis of effluent data for selenium collected over the period of January 2005 through March 2010 shows that the 95th percentile (46 µg/L) is greater than the AMEL (37 µg/L); the 99th percentile (70 µg/L) is greater than the MDEL (50 µg/L); but that the mean (21 µg/L) is less than the long term average of the projected lognormal distribution of the effluent data set after accounting for effluent variability (23 µg/L). However, the statistics are significantly affected by effluent limit violations caused by a selenium treatment plant upset that occurred from May to July of 2008. These effluent violations do not reflect normal selenium treatment plant operation. Therefore, immediate compliance with these effluent limitations is likely feasible.

(e) *Anti-backsliding.* Anti-backsliding requirements are satisfied because the WQBELs are no less stringent than those in the previous permit as amended.

(3) Dioxin-TEQ

(a) *Bioaccumulation WQO*. The Basin Plan narrative WQO for bioaccumulative substances states, "Many pollutants can accumulate on particulates, in sediments, or bioaccumulate in fish and other aquatic organisms. Controllable water quality factors shall not cause a detrimental increase in concentrations of toxic substances found in bottom sediments or aquatic life. Effects on aquatic organisms, wildlife, and human health will be considered."

Because the consensus of the scientific community is that dioxins and furans associate with particulates, accumulate in sediments, and bioaccumulate in the fatty tissues of fish and other organisms, the Basin Plan's narrative bioaccumulation

WQO applies to these pollutants. Elevated levels of dioxins and furans in San Francisco Bay fish tissue demonstrate that the narrative bioaccumulation WQO is not being met. USEPA therefore included San Francisco Bay as impaired by dioxins and furans in the CWA section 303(d) listing of receiving waters where WQOs are not being met after imposition of technology-based requirements.

The CTR establishes a numeric WQO for 2,3,7,8-tetrachlorinated dibenzo-p-dioxin (2,3,7,8-TCDD) of 1.4 x 10^{-8} µg/L to protect human health when aquatic organisms are consumed. When the CTR was promulgated, USEPA stated its support of the regulation of other dioxin and dioxin-like compounds through the use of toxicity equivalencies (TEQs) in NPDES permits. USEPA stated specifically, "For California waters, if the discharge of dioxin or dioxin-like compounds has reasonable potential to cause or contribute to a violation of a narrative criterion, numeric WQBELs for dioxin or dioxin-like compounds should be included in NPDES permits and should be expressed using a TEQ scheme" [65 Fed. Reg. 31682, 31695 (2000)].

This Order uses a TEQ scheme based on a set of toxicity equivalency factors (TEFs) the World Health Organization (WHO) developed in 1998, and a set of bioaccumulation equivalency factors (BEFs) USEPA developed for the Great Lakes region (40 CFR 132, Appendix F), to convert the concentration of any congener of dioxin or furan into an equivalent concentration of 2,3,7,8-TCDD. The CTR criterion is used as a criterion for dioxin-TEQ because dioxin-TEQ represents a toxicity-weighted concentration equivalent to 2,3,7,8-TCDD, thus translating the narrative bioaccumulation objective into a numeric criterion appropriate for the RPA.

To determine if the discharge of dioxin or dioxin-like compounds has Reasonable Potential to cause or contribute to a violation of the Basin Plan's narrative bioaccumulation WQO, TEFs and BEFs were used to express the measured concentrations of 16 dioxin congeners in effluent and background samples as 2,3,7,8-TCDD. These "equivalent" concentrations were then compared to the CTR numeric criterion for 2,3,7,8-TCDD (1.4 x 10^{-8} µg/L). Although the 1998 WHO scheme includes TEFs for dioxin-like PCBs, they are not included in this Order's TEQ scheme. The CTR has established a specific water quality standard for PCBs, and dioxin-like PCBs are included in the analysis of total PCBs.

(b) *RPA Results*. To determine if Reasonable Potential exists for dioxin or dioxin-like compounds, TEFs and BEFs were applied to the measured concentrations of 16 dioxin congeners in effluent and background samples. These "equivalent" concentrations were then compared to the CTR numeric criterion for 2,3,7,8-TCDD (1.4 x 10^{-8} µg/L). This Order establishes effluent limitations for dioxin-TEQ because the MEC (1.5 x 10^{-8} µg/L) exceeds the WQC for dioxin-TEQ translated from the narrative bioaccumulation objective (1.4 x 10^{-8} µg/L), demonstrating Reasonable Potential by Trigger 1.

(c) *Dioxin-TEQ WQBELs*. WQBELs for dioxin-TEQ, calculated according to SIP procedures with a default CV of 0.6 and no dilution credit, are an AMEL of 1.4 x 10^{-8} and an MDEL of 2.8 x 10^{-8} µg/L.

(d) *Feasibility of Compliance*. The Discharger is required to perform monitoring and reporting for dioxin-TEQ consistent with Attachment G, section V.C.1.c.(3), using applicable MLs, TEFs, and BEFs. Dioxin data collected between February 2006 and February 2010, when analyzed consistent with the requirements of Attachment G section V.C.1.c.(3), results in an MEC of ND. Since there is insufficient effluent data to determine the distribution of the effluent data set or to calculate a mean and standard deviation, feasibility to comply with final effluent limitations is determined by directly comparing the MEC (ND) to the AMEL (1.4×10^{-8} µg/L) and MDEL (2.8×10^{-8} µg/L). Thus, the Discharger is expected to be able to comply with the dioxin-TEQ WQBELs.

(e) *Anti-backsliding*. Anti-backsliding requirements are satisfied because the previous permit did not contain dioxin-TEQ WQBELs for Discharge Point 002 that were in effect.

(4) Dichlorobromomethane

(a) *Dichlorobromomethane WQC.* The most stringent applicable WQC for dichlorobromomethane is the CTR human health criterion of 46 µg/L.

(b) *RPA Results.* This Order establishes effluent limitations for dichlorobromomethane because the MEC of 47 µg/L exceeds the most stringent applicable WQC for this pollutant, demonstrating Reasonable Potential by Trigger 1.

(c) *Dichlorobromomethane WQBELs.* WQBELs for dichlorobromomethane, calculated according to SIP procedures using a CV of 0.62 and a dilution credit of D = 9, are an AMEL of 460 µg/L and an MDEL of 938 µg/L. The previous permit contained an AMEL of 340 µg/L and an MDEL of 650 µg/L. Therefore, this Order retains the more stringent previous limits.

(d) *Feasibility of Compliance*. Statistical analysis of effluent data for dichlorobromomethane collected over the period of February 2005 through February 2010 shows that the 95th percentile (43 µg/L) is less than the AMEL (340 µg/L) and the 99th percentile (46 µg/L) is less than the MDEL (650 µg/L). Therefore, immediate compliance with these effluent limitations is feasible.

(e) *Anti-backsliding.* Anti-backsliding requirements are satisfied because the WQBELs are no less stringent than those in the previous permit as amended.

(5) Benzo(a)Pyrene

(a) *Benzo(a)Pyrene WQC.* The most stringent applicable WQC for benzo(a)pyrene is the CTR human health criterion of 0.049 µg/L.

(b) *RPA Results.* This Order establishes effluent limitations for benzo(a)pyrene because the MEC of 1.6 µg/L exceeds the most stringent applicable WQC for this pollutant, demonstrating Reasonable Potential by Trigger 1.

(c) *Benzo(a)Pyrene WQBELs.* WQBELs for benzo(a)pyrene, calculated according to SIP procedures using a default CV of 0.6 and a dilution credit of D = 9, are an AMEL of 0.48 µg/L and an MDEL of 0.97 µg/L.

(d) *Feasibility of Compliance*. Statistical analysis of effluent data for benzo(a)pyrene collected over the period of February 2005 through February 2010 shows that the 95th percentile (0.04 µg/L) is less than the AMEL (0.48 µg/L) and the 99th percentile (1.3 µg/L) is *greater* than the MDEL (0.97 µg/L). This suggests that the Discharger could find immediate compliance with these WQBELs to be challenging. However, these statistics are affected significantly by data collected on a single day (January 8, 2008); the other 21 benzo(a)pyrene results were non-detect. Therefore, immediate compliance with these WQBELs is probably feasible.

(e) Anti-backsliding. Anti-backsliding requirements are satisfied because the previous permit did not include WQBELs for benzo(a)pyrene.

(6) Benzo(b)Fluoranthene

(a) *Benzo(b)Fluoranthene WQC.* The most stringent applicable WQC for benzo(b)fluoranthene is the CTR human health criterion of 0.049 µg/L.

(b) *RPA Results.* This Order establishes effluent limitations for benzo(b)fluoranthene because the MEC of 0.9 µg/L exceeds the most stringent applicable WQC for this pollutant, demonstrating Reasonable Potential by Trigger 1.

(c) *Benzo(b)Fluoranthene WQBELs.* WQBELs for benzo(b)fluoranthene, calculated according to SIP procedures using a default CV of 0.6 and a dilution credit of D = 9, are an AMEL of 0.47 µg/L and an MDEL of 0.95 µg/L.

(d) *Feasibility of Compliance*. Statistical analysis of effluent data for benzo(b)fluoranthene collected over the period of February 2005 through February 2010 shows that the 95th percentile (0.22 µg/L) is less than the AMEL (0.47 µg/L) and the 99th percentile (0.76 µg/L) is less than the MDEL (0.95 µg/L). Therefore, immediate compliance with these effluent limitations is feasible. These statistics are affected significantly by data collected on a single day (January 8, 2008); the other benzo(b)fluoranthene results were non-detect.

(e) *Anti-backsliding.* Anti-backsliding requirements are satisfied because the previous permit did not include WQBELs for benzo(b)fluoranthene.

(7) Bis(2-Ethylhexyl)Phthalate

(a) *Bis(2-Ethylhexyl)Phthalate WQC.* The most stringent applicable WQC for bis(2-ethylhexyl)phthalate is the CTR human health criterion of 5.9 µg/L.

(b) *RPA Results.* This Order establishes effluent limitations for bis(2-ethylhexyl)phthalate because the MEC of 34 µg/L exceeds the most stringent applicable WQC for this pollutant, demonstrating Reasonable Potential by Trigger 1.

(c) *Bis(2-Ethylhexyl)Phthalate WQBELs.* WQBELs for bis(2-ethylhexyl)phthalate, calculated according to SIP procedures using a default CV of 0.6 and a dilution credit of D = 9, are an AMEL of 53 µg/L and an MDEL of 110 µg/L.

(d) *Feasibility of Compliance*. Statistical analysis of effluent data for bis(2-ethylhexyl)phthalate collected over the period of February 2005 through February 2010 shows that the 95th percentile (19 µg/L) is less than the AMEL (53 µg/L) and the 99th percentile (31 µg/L) is less than the MDEL (110 µg/L). Therefore, immediate compliance with these effluent limitations is feasible.

(e) *Anti-backsliding.* Anti-backsliding requirements are satisfied because the previous permit did not include WQBELs for bis(2-ethylhexyl)phthalate.

(8) Chrysene

(a) *Chrysene WQC.* The most stringent applicable WQC for chrysene is the CTR human health criterion of 0.049 µg/L.

(b) *RPA Results.* This Order establishes effluent limitations for chrysene because the MEC of 5.4 µg/L exceeds the most stringent applicable WQC for this pollutant, demonstrating Reasonable Potential by Trigger 1.

(c) *Chrysene WQBELs.* WQBELs for chrysene, calculated according to SIP procedures using a default CV of 0.6 and a dilution credit of D = 9, are an AMEL of 0.48 µg/L and an MDEL of 0.96 µg/L.

(d) *Feasibility of Compliance*. Statistical analysis of effluent data for chrysene collected over the period of February 2005 through February 2010 shows that the 95th percentile (1.2 µg/L) is *greater* than the AMEL (0.48 µg/L) and the 99th percentile (4.6 µg/L) is *greater* than the MDEL (0.97 µg/L). This suggests that the Discharger could find immediate compliance with these WQBELs to be challenging. However, these statistics are affected significantly by data collected on a single day (January 8, 2008); the other 16 chrysene results were non-detect or estimated (detected but not quantified). Therefore, immediate compliance with these WQBELs is probably feasible.

(e) *Anti-backsliding.* Anti-backsliding requirements are satisfied because the previous permit did not include WQBELs for chrysene.

(9) Dibenzo(a,h)Anthracene

(a) *Dibenzo(a,h)Anthracene WQC.* The most stringent applicable WQC for dibenzo(a,h)anthraceneis the CTR human health criterion of 0.049 µg/L.

(b) *RPA Results.* This Order establishes effluent limitations for dibenzo(a,h)anthracene because the MEC of 1 µg/L exceeds the most stringent applicable WQC for this pollutant, demonstrating Reasonable Potential by Trigger 1.

(c) *Dibenzo(a,h)Anthracene WQBELs.* WQBELs for dibenzo(a,h)anthracene, calculated according to SIP procedures using a default CV of 0.6 and a dilution credit of D = 9, are an AMEL of 0.49 µg/L and an MDEL of 0.98 µg/L.

(d) *Feasibility of Compliance*. Statistical analysis of effluent data for dibenzo(a,h)anthracene collected over the period of February 2005 through February 2010 shows that the 95th percentile (0.22 µg/L) is less than the AMEL (0.49 µg/L) and the 99th percentile (0.84 µg/L) is less than the MDEL (0.98 µg/L). Therefore, immediate compliance with these effluent limitations is feasible. These statistics are affected significantly by data collected on a single day (January 8, 2008); the other dibenzo(a,h)anthracene results were non-detect.

(e) *Anti-backsliding.* Anti-backsliding requirements are satisfied because the previous permit did not include WQBELs for dibenzo(a,h)anthracene.

(10) Indeno(1,2,3-cd)Pyrene

(a) *Indeno(1,2,3-cd)Pyrene WQC.* The most stringent applicable WQC for indeno(1,2,3-cd)pyrene is the CTR human health criterion of 0.049 µg/L.

(b) *RPA Results.* This Order establishes effluent limitations for indeno(1,2,3-cd)pyrene because the MEC of 0.3 µg/L exceeds the most stringent applicable WQC for this pollutant, demonstrating Reasonable Potential by Trigger 1.

(c) *Indeno(1,2,3-cd)Pyrene WQBELs.* WQBELs for indeno(1,2,3-cd)pyrene, calculated according to SIP procedures using a default CV of 0.6 and a dilution credit of D = 9, are an AMEL of 0.48 µg/L and an MDEL of 0.96 µg/L.

(d) *Feasibility of Compliance*. Statistical analysis of effluent data for indeno(1,2,3-cd)pyrene collected over the period of February 2005 through February 2010 shows that the 95th percentile (0.08 µg/L) is less than the AMEL (0.48 µg/L) and the 99th percentile (0.26 µg/L) is less than the MDEL (0.96 µg/L). Therefore, immediate compliance with these effluent limitations is feasible. These statistics are affected significantly by data collected on a single day (January 8, 2008); the other indeno(1,2,3-cd)pyrene results were non-detect.

(e) *Anti-backsliding.* Anti-backsliding requirements are satisfied because the previous permit did not include WQBELs for indeno(1,2,3-cd) pyrene.

(11) Total PAHs

(a) *Total PAHs WQO.* The most stringent applicable WQO for total PAHs is the Basin Plan marine aquatic life objective of 15 µg/L.

(b) *RPA Results.* This Order establishes effluent limitations for total PAHs because the MEC of 18 µg/L exceeds the most stringent applicable WQO for this pollutant, demonstrating Reasonable Potential by Trigger 1.

(c) *Total PAHs WQBELs.* WQBELs for total PAHs, calculated according to SIP procedures using a default CV of 0.6 and a dilution credit of D = 9, are an AMEL of 94 µg/L and an MDEL of 189 µg/L.

(d) *Feasibility of Compliance*. Statistical analysis of effluent data for total PAHs collected over the period of February 2005 through February 2010 shows that the 95th percentile (3.9 µg/L) is less than the AMEL (94 µg/L) and the 99th percentile (15.2 µg/L) is less than the MDEL (189 µg/L). Therefore, immediate compliance with these effluent limitations is feasible.

(e) *Anti-backsliding.* Anti-backsliding requirements are satisfied because the previous permit did not include WQBELs for total PAHs.

(12) Ammonia

(a) *Ammonia WQOs*. The Basin Plan contains WQOs for un-ionized ammonia of 0.025 mg/L as an annual median and 0.16 mg/L as a maximum upstream of the San Francisco Bay Bridge. These WQOs were translated from un-ionized ammonia concentrations to equivalent total ammonia concentrations (as nitrogen) since (1) sampling and laboratory methods are not available to analyze for un-ionized ammonia, and (2) the fraction of total ammonia that exists in the toxic un-ionized form depends on the pH, salinity, and temperature of the receiving water. Salinity, pH, and temperature data from 1993 through 2001 from the nearest RMP station to the outfall, the Davis Point Station (BD40), were used to translate the Basin Plan un-ionized ammonia objective. The following equations were applied to determine the fraction of total ammonia that would exist in the toxic un-ionized form in the estuarine receiving water where the various measurements were taken (USEPA, 1989, Ambient Water Quality Criteria for Ammonia (Saltwater)–1989, EPA Publication 440/5-88-004):

For salinity > 10 ppt: fraction of NH_3 = $\frac{1}{1+10^{(pK-pH)}}$

Where:

$$pK = 9.245 + 0.116(I) + 0.0324(298 - T) + \frac{0.0415(P)}{(T)}$$

I = Molal ionic strength of saltwater = $\frac{19.9273(S)}{(1{,}000 - 1.005109[S])}$

S = Salinity (parts per thousand)

T = Temperature in degrees Kelvin

P = Pressure (one atmosphere)

The 90th percentile and median un-ionized ammonia fractions from 1993 to 2001 were then used to express the acute and chronic un-ionized ammonia WQOs as total ammonia concentrations. This approach is consistent with USEPA guidance on translating dissolved metal WQOs to total recoverable metal WQOs (USEPA, 1996,

The Metals Translator: Guidance for Calculating a Total Recoverable Limit from a Dissolved Criterion, EPA Publication 823-B-96-007). The equivalent total ammonia acute and chronic WQC are 5.67 mg/L and 1.49 mg/L, respectively.

(b) *RPA Results.* Basin Plan section 4.5.5.2 indicates that WQBELs shall be calculated according to the SIP. Basin Plan section 3.3.20 refers to ammonia as a toxic pollutant. Therefore, the SIP methodology was used to perform the RPA and to calculate effluent limitations for ammonia. This Order establishes effluent limitations for total ammonia because the MEC of 19.4 mg/L exceeds the most stringent applicable translated WQO for this pollutant, demonstrating Reasonable Potential by Trigger 1.

(c) *WQBELs.* WQBELs for total ammonia, calculated according to SIP procedures using a CV of 3.3 and a dilution credit of D = 36 are an MDEL of 200 mg/L and an AMEL of 61 mg/L. This calculation reflects statistical adjustments because:

- the Basin Plan's chronic WQO for un-ionized ammonia is based on an annual median instead of the typical 4-day average; and

- the SIP assumes a 4-day average concentration and monthly sampling frequency of 4 days per month to calculate effluent limitations based on chronic criteria, whereas a 365-day average and a monitoring frequency of 30 days per month, reflecting the actual basis of the WQO and actual sampling frequency, were used here.

These statistical adjustments are supported by USEPA's *Water Quality Criteria; Notice of Availability; 1999 Update of Ambient Water Quality Criteria for Ammonia,* published on December 22, 1999, in the Federal Register.

Following the SIP methodology, the maximum ambient background total ammonia concentration was used to calculate effluent limitations based on the acute criterion, and the median background total ammonia concentration was used to calculate effluent limitations based on the chronic criterion. Because the Basin Plan's chronic un-ionized ammonia objective is an annual median, the median background concentration is more representative of ambient conditions than a daily maximum.

(d) *Feasibility of Compliance*. Statistical analysis of effluent data for total ammonia collected over the period of January 2005 through May 2010 shows that the 95th percentile (5 mg/L) is less than the AMEL (61 mg/L); the 99th percentile (10 mg/L) is less than the MDEL (200 mg/L); and the mean (0.8 mg/L) is less than the long term average of the effluent data set after accounting for effluent variability (28.4 mg/L). Therefore, immediate compliance with these WQBELs is feasible.

(e) *Anti-backsliding.* Anti-backsliding requirements are satisfied because the previous permit did not include WQBELs for total ammonia.

c. Effluent Limitation Calculations – Discharge Point 002

Table F-15 below summarizes the effluent limit calculations for Discharge Point 002.

Table F-15. Effluent Limitation Calculations for Discharge Point 002

PRIORITY POLLUTANTS	Copper	Selenium	Dioxin TEQ (303d listed)	Benzo(a) Pyrene	Benzo(b) Fluoranthene	Bis(2-Ethylhexyl) Phthalate
Units	**ug/L**	**ug/L**	**ug/L**	**ug/L**	**ug/L**	**ug/L**
Basis and Criteria type	Basin Plan SSO	CTR Aquatic Life	CTR HH	CTR HH	CTR HH	CTR HH
Criteria -Acute	-----	20	-----	-----	-----	-----
Criteria -Chronic	-----	5.0	-----	-----	-----	-----
SSO Criteria -Acute	3.9	-----	-----	-----	-----	-----
SSO Criteria -Chronic	2.5	-----	-----	-----	-----	-----
Water Effects ratio (WER)	2.4	1	1	1	1	1
Lowest WQO	14	5.0	1.4E-08	0.049	0.049	5.9
Site-specific Translator - MDEL	0.66	-----	-----	-----	-----	-----
Site-specific Translator - AMEL	0.38	-----	-----	-----	-----	-----
Dilution Factor (D) (if applicable)	9	9	0	9	9	9
No. of samples per month	4	4	4	4	4	4
Aquatic life criteria analysis required? (Y/N)	Y	Y	N	N	N	N
HH criteria analysis required? (Y/N)	N	N	Y	Y	Y	Y
Applicable Acute WQO	14	20	-----	-----	-----	-----
Applicable Chronic WQO	16	5	-----	-----	-----	-----
HH criteria			1.4E-08	0.049	0.049	5.9
Background (Maximum Conc for Aquatic Life calc)	2.55	0.39	-----	-----	-----	-----
Background (Average Conc for Human Health calc)	-----		5.0E-08	0.00065	0.0019	0.70
Is the pollutant on the 303d list and/or bioaccumulative (Y/N)?	N	N	Y	N	N	N
ECA acute	119	196	-----	-----	-----	-----
ECA chronic	135	46	-----	-----	-----	-----
ECA HH	-----	-----	1.4E-08	0.48	0.47	53
No. of data points <10 or at least 80 percent of data reported non detect? (Y/N)	N	N	Y	Y	Y	Y
Avg of effluent data points	11	21	1.7E-09	0.085	0.068	3.4
Std Dev of effluent data points	11	14	4.7E-09	0.34	0.21	10
CV calculated	0.95	0.66	N/A	N/A	N/A	N/A
CV (Selected) - Final	0.95	0.66	0.60	0.60	0.60	0.60
ECA acute mult99	0.21	0.29	-----	-----	-----	-----
ECA chronic mult99	0.39	0.50	-----	-----	-----	-----
LTA acute	25	58	-----	-----	-----	-----
LTA chronic	52	23	-----	-----	-----	-----
minimum of LTAs	25	23	-----	-----	-----	-----

PRIORITY POLLUTANTS	Copper	Selenium	Dioxin TEQ (303d listed)	Benzo(a) Pyrene	Benzo(b) Fluoranthene	Bis(2-Ethylhexyl) Phthalate
Units	**ug/L**	**ug/L**	**ug/L**	**ug/L**	**ug/L**	**ug/L**
AMEL mult95	1.9	1.6	1.6	1.6	1.6	1.6
MDEL mult99	4.7	3.4	3.1	3.1	3.1	3.1
AMEL (aq life)	48	37	-----	-----	-----	-----
MDEL(aq life)	119	78	-----	-----	-----	-----
MDEL/AMEL Multiplier	2.5	2.1	2.0	2.0	2.0	2.0
AMEL (human hlth)	-----	-----	1.4E-08	0.48	0.47	53
MDEL (human hlth)	-----	-----	2.8E-08	0.97	0.95	106
minimum of AMEL for Aq. life vs HH	48	37	1.4E-08	0.48	0.47	53
minimum of MDEL for Aq. Life vs HH	119	78	2.8E-08	0.97	0.95	106
Current limit in permit (30-day average)	60	37	1.40E-08	-----	-----	-----
Current limit in permit (daily)	120	50	2.80E-08	-----	-----	-----
Final limit - AMEL	48	37	1.4E-08	0.48	0.47	53
Final limit - MDEL	120	50	2.8E-08	0.97	0.95	110
Max Effl Conc (MEC)	67	75	1.5E-08	1.6	0.90	34

Table F-15. Effluent Limitation Calculations for Discharge Point 002 (Continued)

PRIORITY POLLUTANTS	Chrysene	Dibenzo (a,h) Anthracene	Indeno (1,2,3-cd) Pyrene	Dichlorobromomethane	Total PAHs	Total Ammonia	
Units	**ug/L**	**ug/L**	**ug/L**	**ug/L**	**ug/L**	**mg/L N**	**mg/L N**
Basis and Criteria type	CTR HH	CTR HH	CTR HH	CTR HH	CTR HH (Chronic)	Basin Plan Aquatic Life	Basin Plan Aquatic Life
Criteria -Acute	-----	-----	-----	-----	15	5.67	-----
Criteria -Chronic	-----	-----	-----	-----	-----	-----	1.49
SSO Criteria -Acute	-----	-----	-----	-----	-----	-----	-----
SSO Criteria -Chronic	-----	-----	-----	-----	-----	-----	-----
Water Effects ratio (WER)	1	1	1	1	1	1	1
Lowest WQO	0.049	0.049	0.049	46	15	5.67	1.49
Site-specific Translator - MDEL	-----	-----	-----	-----	-----	-----	-----
Site-specific Translator - AMEL	-----	-----	-----	-----	-----	-----	-----
Dilution Factor (D) (if applicable)	9	9	9	9	9	36	36
No. of samples per month	4	4	4	4	4	4	4
Aquatic life criteria analysis required? (Y/N)	N	N	N	N	N	Y	Y

PRIORITY POLLUTANTS	Chrysene	Dibenzo (a,h) Anthracene	Indeno (1,2,3-cd) Pyrene	Dichlorobromomethane	Total PAHs	Total Ammonia	
Units	**ug/L**	**ug/L**	**ug/L**	**ug/L**	**ug/L**	**mg/L N**	**mg/L N**
HH criteria analysis required? (Y/N)	Y	Y	Y	Y	Y	N	N
Applicable Acute WQO	-----	-----	-----	-----	-----	5.67	
Applicable Chronic WQO	-----	-----	-----	-----	15	-----	1.49
HH criteria	0.049	0.049	0.049	46	-----	-----	-----
Background (Maximum Conc for Aquatic Life calc)	-----	-----	-----	-----	0.08	0.20	0.070
Background (Average Conc for Human Health calc)	0.0011	0.0003	0.0014	0.050			
Is the pollutant on the 303d list and/or bioaccumulative (Y/N)?	N	N	N	N	N	N	N
ECA acute	-----	-----	-----	-----	-----	203	-----
ECA chronic	-----	-----	-----	-----	149	-----	53
ECA HH	0.48	0.49	0.48	460	-----	-----	-----
No. of data points <10 or at least 80 percent of data reported non detect? (Y/N)	Y	Y	Y	N	Y	N	N
Avg of effluent data points	0.35	0.070	0.030	21	1.1	0.78	0.78
Std Dev of effluent data points	1.3	0.24	0.070	13	4.4	2.6	2.6
CV calculated	N/A	N/A	N/A	0.62	N/A	3.3	3.3
CV (Selected) - Final	0.60	0.60	0.60	0.62	0.60	3.3	3.3
ECA acute mult99	-----	-----	-----	-----	-----	0.088	-----
ECA chronic mult99	-----	-----	-----	-----	0.53	-----	0.68
LTA acute	-----	-----	-----	-----	-----	18	-----
LTA chronic	-----	-----	-----	-----	79	-----	36
minimum of LTAs	-----	-----	-----	-----	79	18	36
AMEL mult95	1.6	1.6	1.6	1.6	1.6	3.4	3.4
MDEL mult99	3.1	3.1	3.1	3.2	3.1	11	11
AMEL (aq life)	-----	-----	-----	-----	122	61	122
MDEL(aq life)	-----	-----	-----	-----	245	203	404
MDEL/AMEL Multiplier	2.0	2.0	2.0	2.0	2.0	3.3	3.3
AMEL (human hlth)	0.48	0.49	0.48	460	-----	-----	-----
MDEL (human hlth)	0.96	0.98	0.96	938	-----	-----	-----
minimum of AMEL for Aq. life vs HH	0.48	0.49	0.48	460	122	61	122
minimum of MDEL for Aq. Life vs HH	0.96	0.98	0.96	938	245	203	404
Current limit in permit (30-day average)	-----	-----	-----	340	-----	-----	-----
Current limit in permit (daily)	-----	-----	-----	650	-----	-----	-----

PRIORITY POLLUTANTS	Chrysene	Dibenzo (a,h) Anthracene	Indeno (1,2,3-cd) Pyrene	Dichlorobro momethane	Total PAHs	Total Ammonia	
Units	**ug/L**	**ug/L**	**ug/L**	**ug/L**	**ug/L**	**mg/L N**	**mg/L N**
Final limit - AMEL	0.48	0.49	0.48	340	120	61	120
Final limit - MDEL	0.96	0.98	0.96	650	250	200	400
Max Effl Conc (MEC)	5.4	1.0	0.30	47	18	19	19

d. Selenium Mass Emission Limitation – Discharge Point 002

SIP section 2.1.1 states that for bioaccumulative compounds on the 303(d) list, the Regional Water Board should consider whether mass-loading limits should be limited to current levels. The Regional Water Board finds that mass-loading limits are warranted for selenium. The purpose of this mass-loading limit is to further ensure that this Discharger maintains its existing selenium treatment performance, and does not further contribute to impairment of the narrative objective for bioaccumulation in San Pablo Bay, pending a TMDL.

The mass emission limit is based on the average monthly effluent limit (calculated above) and the long-term average daily effluent flows (as reported in the Report of Waste Discharge). The mass loading limit is calculated using the average monthly effluent limit, instead of the maximum daily effluent limit, because the average monthly effluent limit better represents long-term performance.

The mass loading limit is calculated using the following equation.

Mass Emission (kg/day) = (Flow, MGD) x (Selenium Concentration, mg/L) x 3.785
Mass Emission (kg/day) = 3.14 MGD x 0.037 mg/L x 3.785 = 0.44 kg/day

The interim selenium mass emission limitation in the previous permit was 0.39 kg/day as a running annual average. Because the newly-calculated mass emission limit is less stringent than the previous mass emission limit, this Order requires compliance with the previous limit to maintain current performance.

The mass emission limit is expressed as a running annual average to be consistent with the previous permit limit. The running annual average is the arithmetic average of the current day's mass load and the mass loads for each of the previous 364 days, as shown in the following example:

Annual Mass emission rate (kg/day) = $\frac{3.785}{N}\sum_{i=1}^{N} Q_i C_i$

where:

N = number of samples analyzed in any calendar year
Q_i = flow rate (MGD) associated with the Nth sample
C_i = selenium concentration (mg/L) associated with the Nth sample
Flow (MGD) = Average of monthly plant effluent flows.

Anti-backsliding requirements are satisfied because the mass emission limit in this Order is equivalent to the previous mass emission limit.

e. Bacteria – Discharge Point 002

This Order includes effluent limitations for total coliform bacteria at Discharge Point 002 that are unchanged from the previous permit and based on Basin Plan Table 4-2.

The Regional Water Board adopted bacteria water quality objectives for contact recreation in marine and estuarine waters and effluent limitations that would implement those objectives for sanitary wastewater discharges (Order No. R2-2010-0066). The State Water Board approved this action on April 5, 2011. After USEPA's approval, Order No. R2-2010-0066 will amend Basin Plan section 4.5.5.1 to require all NPDES permits for discharges containing sanitary waste to contain the applicable effluent limitations from new Basin Plan Table 4-2A. One such limitation would be for enterococcus, which applies to discharges to waters with water contact recreation beneficial use. The Regional Water Board may either reopen this permit to implement the limit, or do so in the next reissuance.

f. Acute Toxicity – Discharge Point 002

This Order includes effluent limitations for whole effluent acute toxicity for Discharge Point 002 that are unchanged from the previous permit and based on Basin Plan section 4.5.5.3.1. All bioassays are to be performed using the most up-to-date USEPA protocol and the most sensitive species as specified in writing by the Executive Officer based on the most recent screening test results. Bioassays are to be conducted in compliance with *Methods for Measuring the Acute Toxicity of Effluents and Receiving Water to Freshwater and Marine Organisms*, currently 5th Edition (EPA-821-R-02-012), with exceptions granted to the Discharger by the Executive Officer and the Environmental Laboratory Accreditation Program (ELAP) upon the Discharger's request with justification. Based on Basin Plan section 3.3.20, if the Discharger can demonstrate that toxicity is caused solely by ammonia and the ammonia in the discharge complies with effluent limits, such toxicity does not constitute a violation of the acute toxicity effluent limitation.

g. Chronic Toxicity – Discharge Point 002

This Order includes effluent limitations for chronic toxicity that are unchanged from the previous permit and based on Basin Plan section 4.5.5.3.2. The permit requirements for chronic toxicity are also consistent with requirements of the CTR and SIP section 4, Toxicity Control Provisions.

The Discharger implemented a chronic toxicity screening phase monitoring program for chronic toxicity and the results of this study have been incorporated (see Attachment E, section V.B).

h. Effluent Limit Adjustments for Recycled Water Use – Discharge Point 002

This Order provides for effluent limit adjustments for recycled water use to encourage wastewater recycling, consistent with Basin Plan section 4.16 and State Water Board resolutions 77-1 and 2009-0011, and to account for the increase in pollutant concentrations

that may result. Before being granted effluent limit adjustments, the Order requires the Discharger to demonstrate in accordance with provision VII.C.4.c that the resulting adjustment(s) will not result in acutely toxic impacts.

If the Discharger were to recycle some of its wastewater, pollutants in the recycled wastewater would be returned to the process water and wastewater stream, resulting in the same mass of pollutants discharged in a smaller volume of water. If the Discharger were to use recycled water from another source, such as treated water from a publically-owned treatment works, that would otherwise have been discharged directly, no additional mass of contaminants would be discharged to San Francisco Bay, although a larger mass would be discharged from the Discharger's facility.

Since recycling water will not increase the pollutant mass discharged to San Pablo Bay, the effluent limit adjustments will not result in far-field impacts on beneficial uses. In effect, allowing these effluent limit adjustments is the same as granting higher dilution credit than described in Fact Sheet section IV.C.4.a. As discussed there, dilution credits are typically restricted to 10:1 for conservative pollutants and zero for bioaccumulative pollutants that impair beneficial uses. The actual initial dilution achieved at Discharge Point 002 is at least 37:1, according to the dilution study referenced in Fact Sheet section IV.C.4.a.

Effluent limit adjustments are not granted for residual chlorine or total ammonia. Basin Plan Table 4-2 requires a residual chlorine limit of 0.0 mg/L. The effluent limits for ammonia are already calculated based on a 37:1 dilution ratio. Adjustment would result in raising the concentration limits to a point where they would not be protective of the Basin Plan's un-ionized ammonia objective.

i. Calculation of Pollutant-Specific WQBELs - Discharge Point 003

(1) Copper in Discharge Point 003

(a) *Copper WQOs*. The most stringent applicable WQOs for copper are the Basin Plan site-specific chronic and acute marine WQOs, 6.0 and 9.4 micrograms per liter (µg/L), respectively, expressed as dissolved metal. Converting these WQOs to total recoverable metal using site-specific translators of 0.59 (chronic) and 0.84 (acute) results in a chronic WQC of 10 µg/L and an acute WQC of 11 µg/L.

(b) *RPA Results*. This Order establishes effluent limitations for copper because the MEC of 18 µg/L exceeds the most stringent applicable WQO for this pollutant, demonstrating Reasonable Potential by Trigger 1. In addition, Basin Plan section 7.2.2.2 requires that individual NPDES permits for municipal and industrial wastewater treatment facilities include copper WQBELs.

(c) C*opper WQBELs*. WQBELs for copper, calculated according to SIP procedures using a CV of 0.41 and a dilution credit of D = 0, are an AMEL of 6.6 µg/L and an MDEL of 11 µg/L.

(d) *Feasibility of Compliance*. Statistical analysis of effluent data for copper collected over the period of January 2005 through March 2010 shows that the 95th percentile (15 µg/L) is *greater* than the AMEL (6.6 µg/L); the 99th percentile (17 µg/L) is

greater than the MDEL (11 µg/L); and the mean (8.8 µg/L) is *greater* than the long term average of the projected normal distribution of the effluent data set after accounting for effluent variability (4.8 µg/L). This suggests that the Discharger could find immediate compliance with these WQBELs to be challenging. However, immediate compliance is expected to be feasible with the intake credits described in section IV.C.4.k of this Fact Sheet.

(e) *Anti-backsliding*. Anti-backsliding requirements are satisfied because the previous permit did not include WQBELs for copper at Discharge Point 003.

(2) Nickel in Discharge Point 003

(a) *Nickel WQOs*. The most stringent applicable WQOs for nickel are the Basin Plan and CTR chronic and acute marine WQOs, 8 and 74 µg/L, respectively, expressed as dissolved metal. Converting these WQOs to total recoverable metal using site-specific translators of 0.57 (chronic) and 0.78 (acute) results in a chronic WQC of 14 µg/L and an acute WQC of 95 µg/L.

(b) *RPA Results*. This Order establishes effluent limitations for nickel because the MEC of 41 µg/L exceeds the most stringent applicable WQO for this pollutant, demonstrating Reasonable Potential by Trigger 1.

(c) *Nickel WQBELs*. WQBELs for nickel, calculated according to SIP procedures using a CV of 0.5 and a dilution credit of D = 0, are an AMEL of 12 µg/L and an MDEL of 23 µg/L.

(d) *Feasibility of Compliance*. Statistical analysis of effluent data for nickel collected over the period of January 2005 through March 2010 shows that the 95th percentile (23 µg/L) is *greater* than the AMEL (12 µg/L); the 99th percentile (28 µg/L) is *greater* than the MDEL (23 µg/L); and the mean (13 µg/L) is *greater* than the long term average of the projected normal distribution of the effluent data set after accounting for effluent variability (8 µg/L). This suggests that the Discharger could find immediate compliance with these WQBELs to be challenging. However, immediate compliance is expected to be feasible with the intake credits described in section IV.C.4.k of this Fact Sheet.

(e) *Anti-backsliding*. Anti-backsliding requirements are satisfied because the previous permit did not include WQBELs for nickel at Discharge Point 003.

(3) Zinc in Discharge Point 003

(a) *Zinc WQOs*. The most stringent applicable WQOs for nickel are the Basin Plan and CTR chronic and acute marine WQOs, 86 and 95 µg/L, respectively.

(b) *RPA Results*. This Order establishes effluent limitations for zinc because the MEC of 120 µg/L exceeds the most stringent applicable WQO for this pollutant, demonstrating Reasonable Potential by Trigger 1.

(c) *Zinc WQBELs*. WQBELs for zinc, calculated according to SIP procedures using a CV of 0.43 and a dilution credit of D = 0, are an AMEL of 55 µg/L and an MDEL of 95 µg/L.

(d) *Feasibility of Compliance*. Statistical analysis of effluent data for zinc collected over the period of January 2005 through May 2010 shows that the 95th percentile (45 µg/L) is less than the AMEL (55 µg/L); the 99th percentile (71 µg/L) is less than the MDEL (95 µg/L); and the mean (32 µg/L) is less than the long term average of the effluent data set after accounting for effluent variability (40 µg/L). Therefore, immediate compliance with these WQBELs is feasible.

(e) *Anti-backsliding*. Anti-backsliding requirements are satisfied because the previous permit did not include WQBELs for zinc at Discharge Point 003.

(4) Dioxin-TEQ in Discharge Point 003

(a) *Bioaccumulation WQO*. The translation of the applicable WQO is discussed in section IV.C.4.b.(3) of this Fact Sheet.

(b) *RPA Results*. This Order establishes effluent limitations for dioxin-TEQ because the MEC (2.5×10^{-8} µg/L) exceeds the WQC for dioxin-TEQ translated from the narrative bioaccumulation objective (1.4×10^{-8} µg/L), demonstrating Reasonable Potential by Trigger 1.

(c) *Dioxin-TEQ WQBELs*. WQBELs for dioxin-TEQ, calculated according to SIP procedures using a default CV of 0.6 and no dilution credit, are an AMEL of 1.4×10^{-8} and an MDEL of 2.8×10^{-8} µg/L.

(d) *Feasibility of Compliance.* Dioxin data collected between August 2006 and February 2010, when analyzed consistent with the requirements of Attachment G section V.C.1.c.(3), results in an MEC of ND. Since there is insufficient effluent data to determine the distribution of the effluent data set or to calculate a mean and standard deviation, feasibility to comply with final effluent limitations is determined by comparing the MEC (ND) to the AMEL (1.4×10^{-8} µg/L) and MDEL (2.8×10^{-8} µg/L). Thus, the Discharger is expected to be able to comply with the dioxin-TEQ WQBELs. Nevertheless, this Order provides for intake credits, if necessary, as described in section IV.C.4.k of this Fact Sheet.

(e) *Anti-backsliding*. Anti-backsliding requirements are satisfied because the previous permit did not contain WQBELs for dioxin-TEQ at Discharge Point 003.

j. Effluent Limitation Calculations – Discharge Point 003

Table F-16 below summarizes the effluent limit calculations for Discharge Point 003.

Table F-16. Effluent Limitation Calculations for Discharge Point 003

PRIORITY POLLUTANTS	Copper	Nickel	Zinc	Dioxin TEQ
Units	**ug/L**	**ug/L**	**ug/L**	**ug/L**
Basis and Criteria type	Basin Plan SW Aquatic Life	BP & CTR SW Aquatic Life	BP & CTR SW Aquatic Life	CTR HH
Criteria -Acute	-----	74	95	-----
Criteria –Chronic	-----	8.0	86	-----
SSO Criteria -Acute	3.9	-----	-----	-----
SSO Criteria -Chronic	2.5	-----	-----	-----
Water Effects ratio (WER)	2.4	1	1	1
Lowest WQO				1.4E-08
Site-specific Translator – MDEL	0.84	0.78	-----	-----
Site-specific Translator – AMEL	0.59	0.57	-----	-----
Dilution Factor (D) (if applicable)	0	0	0	0
No. of samples per month	4	4	4	4
Aquatic life criteria analysis required? (Y/N)	Y	Y	Y	N
HH criteria analysis required? (Y/N)	N	Y	N	Y
Applicable Acute WQO	11	95	95	-----
Applicable Chronic WQO	10	14	86	-----
HH criteria	-----	4600	-----	1.4E-08
Background (Maximum Conc for Aquatic Life calc)	2.5	3.7	5.1	-----
Background (Average Conc for Human Health calc)	-----	3.7	-----	7.1E-08
Is the pollutant on the 303d list and/or bioaccumulative (Y/N)?	N	N	N	Y
ECA acute	11	95	95	-----
ECA chronic	10	14	86	-----
ECA HH	-----	4600	-----	1.4E-08
No. of data points <10 or at least 80 percent of data reported non detect? (Y/N)	N	N	N	Y
Avg of effluent data points	8.8	13	32	3.2E-09
Std Dev of effluent data points	3.6	6.4	13	7.8E-09
CV calculated	0.41	0.50	0.42	N/A
CV (Selected) - Final	0.41	0.50	0.42	0.60
ECA acute mult99	0.43	0.37	0.43	-----
ECA chronic mult99	0.64	0.58	0.63	-----
LTA acute	4.8	35	40	-----
LTA chronic	6.5	8.3	54	-----
minimum of LTAs	4.8	8.3	40	-----

PRIORITY POLLUTANTS	Copper	Nickel	Zinc	Dioxin TEQ
AMEL mult95	1.4	1.5	1.4	1.6
MDEL mult99	2.3	2.7	2.4	3.1
AMEL (aq life)	6.6	12	56	-----
MDEL(aq life)	11	22	95	-----
MDEL/AMEL Multiplier	1.7	1.8	1.7	2.0
AMEL (human hlth)		4600		1.4E-08
MDEL (human hlth)	-----	-----	-----	2.8E-08
minimum of AMEL for Aq. life vs HH	6.6	12	56	1.4E-08
minimum of MDEL for Aq. Life vs HH	11	22	95	2.8E-08
Current limit in permit (30-day average)	-----	-----	-----	-----
Current limit in permit (daily)	-----	-----	-----	-----
Final limit - AMEL	6.6	12	56	1.4E-08
Final limit - MDEL	11	22	95	2.8E-08
Max Effl Conc (MEC)	18	41	120	2.9E-06

k. Intake Water Credits - Discharge Point 003

(1) SIP Requirements. SIP section 1.4.4 provides for intake water credits under specific circumstances. When met, a discharger may discharge a mass or concentration of a pollutant (e.g., copper, nickel, or dioxin-TEQ) that is no greater than the mass or concentration found in its intake water (e.g., the discharger may add a mass of the pollutant to its waste stream if it also removes an equal or greater mass prior to discharge, resulting in no net addition of the pollutant). This Order provides intake water credits for copper, nickel, and dioxin-TEQ discharges from Discharge Point 003 (primarily once-through cooling water) because doing so complies with the SIP requirements:

- The maximum ambient background concentration and intake water concentration of each pollutant exceed the most stringent WQOs for that pollutant.

  Data in an August 28, 2007, Brown & Caldwell technical memorandum indicate that San Pablo Bay copper and nickel concentrations exceed the most stringent WQOs when using Facility-specific translators. Furthermore, San Francisco Bay is listed as impaired pursuant to CWA section 303(d), indicating that background dioxin-TEQ concentrations exceed the Basin Plan's narrative bioaccumulation WQO. Finally, intake concentrations of copper, nickel, and dioxin-TEQ measured during routine monitoring often exceed the applicable water quality objectives. In addition to satisfying SIP criteria, the intake concentrations indicate that background concentrations of these pollutants near the intake also exceed WQOs.

- Intake water credits are consistent with TMDLs.

  No copper, nickel, or dioxin-TEQ TMDL exists.

- The intake water is from the same water body as the receiving water body.

  As shown in Attachment B, the intake water is taken from and returned to San Pablo Bay (i.e., there is a direct hydrological connection between the intake and the discharge point).

- The Facility does not alter the intake water pollutant chemically or physically in a manner that adversely affects water quality and beneficial uses.

  The small volume waste streams discharged with the once-through cooling water constitute less than 2 percent of the Discharge Point 003 flow. These small volume waste streams, consisting of neutralized demineralizer water, non-process area stormwater, and guard shack sink water, do not chemically or physically alter the intake water copper, nickel, or dioxin-TEQ. Likewise, the heat discharged through Discharge Point 003 is insufficient to chemically or physically alter the copper, nickel, and dioxin-TEQ in the discharge.

- The timing and location of the discharge does not cause adverse effects on water quality and beneficial uses that would not occur if the intake water pollutant had been left in the receiving water body.

  Once-through cooling water circulates within the Facility for only a short time before being discharged not far from the intake structure. The discharge does not affect the mass or concentrations of pollutants in the receiving water at any particular place. Once-through cooling causes no chemical or physical changes in the pollutants and thus does not make them more bioavailable, toxic, or otherwise deleterious than if they had been left in the receiving water.

(2) Intake Water Credits. To qualify for an intake water credit, the effluent pollutant concentration must be less than or equal to the intake pollutant concentration. However, intake and effluent data collected on the same day may differ due to factors unrelated to Facility operations, such as sampling and laboratory analytical variability. Since the residence time of once-through cooling water from intake to discharge is approximately one hour, depending on flow rate, samples taken on the same day should be representative of the same water (assuming they are 24-hour composites, or grabs collected within a reasonably short time). Intake and effluent pollutant concentration data from January 2005 to August 2010 were studied to determine whether there was any long-term statistical difference between influent and effluent concentrations, and to determine the expected and unavoidable variability associated with sample collection and analysis.

Statistical analysis of influent and effluent data for copper, nickel, and dioxin-TEQ from January 2005 to August 2010 shows no statistical difference between the influent and effluent data sets. Influent and effluent copper data are normally distributed, and the means of their distributions were compared using a two-sided t-test.

- For copper, the mean influent concentration (8.7 ug/L) and effluent concentration (8.6 ug/L) are not significantly different at 95 percent confidence.

While the influent data for nickel are normally distributed, the effluent data are not, and the influent and effluent dioxin data are too few to determine a distribution. Therefore these data sets were analyzed using the non-parametric Mann-Whitney test, comparing the medians.

- For nickel, the median influent concentration (11 ug/L) and effluent concentration (12 ug/L) are not significantly different at 95 percent confidence.

- For dioxin-TEQ, the median influent concentration (0.022 pg/L) and effluent concentration (0.025 pg/L) are not significantly different at 95 percent confidence.

In addition, once-through cooling is not a source of dioxin-TEQ; any dioxin-TEQ present in the effluent is likely present in the influent.

Similar analysis was completed for zinc. However, the analysis failed to support a conclusion that the Discharger was not contributing zinc to the discharge. The influent and effluent zinc data did not fit a standard distribution (normal or lognormal) and were therefore compared using the non-parametric Mann-Whitney comparison of the medians of the two data sets. This showed that the median effluent concentration was significantly higher than the median influent concentration at the 95 percent confidence level. Therefore, intake water credits are not included for zinc.

To determine expected sample variability for copper, nickel, and dioxin-TEQ, the daily and monthly average effluent concentrations were subtracted from the corresponding influent concentrations for each pollutant. Then, the 99th percentile of the absolute values of the differences was calculated. The 99th percentile values were calculated separately for daily maximum and monthly average concentrations so as not to over-estimate or under-estimate the variability pertaining to either effluent limit.

The resulting 99th percentile values represent the upper range of the variability between intake and effluent pollutant concentrations due to sampling and analysis variability: they result in intake credits that capture the variability between influent and effluent data, and prevent discharge of additional pollutant mass. A higher percentile might include extreme and possibly spurious values, which might mask a legitimate violation; a lower percentile might result in violations due to sample variability instead of addition of pollutants.

Intake and effluent concentrations are essentially the same if the difference between them is no greater than the values in Table F-17. Thus, the intake water credits are expressed such that effluent copper, nickel, and dioxin-TEQ concentrations that exceed their respective WQBELs would not be violations of those WQBELs if the difference between the effluent sample concentration of the pollutant and the intake sample is less than or equal to the value in Table F-17.

Table F-17. 99th Percentile Differences Between Influent and Effluent Concentrations at Discharge Point 003

Parameter	Units	Final Limits		99th Percentile Difference	
		Daily Maximum	Monthly Average	Daily Maximum	Monthly Average
Copper	µg/L	11	6.6	9.4	5.0
Nickel	µg/L	22	12	13.5	10
Dioxin-TEQ	µg/L	0.028	0.014	0.75	0.75

l. Additional Water Quality Based Effluent Limitations – Discharge Point 003

(1) pH. Basin Plan section 3.3.9 requires that the pH of surface waters not be depressed below 6.5 nor raised above 8.5. This Order retains these pH limitations from the previous permit.

(2) Temperature. The State's Thermal Plan requires existing discharges to enclosed bays to comply with limitations necessary to ensure protection of beneficial uses. The Discharger conducted a Thermal Study, dated February 2, 2001, which concluded that the elevated-temperature discharge from 003, as permitted, did not adversely affect the beneficial uses of San Pablo Bay. Since the 003 discharge has not substantively changed since the 2001 Thermal Study, this Order retains the temperature limitations from the previous permit to maintain existing performance, which based on the 2001 Thermal Study is protective of beneficial uses. In addition, this Order requires that the Discharger complete another evaluation of thermal impacts along with management measures that may further reduce the temperature of the discharge. (See VIIC.2.e. below for further details.)

m. Water Quality Based Effluent Limitations – Discharge Point 004

(1) pH. Basin Plan section 3.3.9 requires that the pH of surface waters not be depressed below 6.5 nor raised above 8.5. This Order retains the pH limitations from the previous permit based on the Basin Plan.

(2) Visible Oil. Basin Plan section 3.3.7 requires that waters not contain oils, greases, waxes, or other materials in concentrations that result in a visible film or coating on the surface of the water or on objects in the water, that cause nuisance, or that otherwise adversely affect beneficial uses. This Order retains the visible oil limitation from the previous permit based on the Basin Plan.

(3) Visible Color. Basin Plan section 3.3.4 requires that waters be free of coloration that causes nuisance or adversely affects beneficial uses. This Order retains the visible color limitation from the previous permit based on the Basin Plan.

D. Anti-backsliding and Antidegradation

1. Anti-backsliding

CWA sections 402(o)(2) and 303(d)(4) and 40 CFR 122.44(l) prohibit backsliding in NPDES permits. These anti-backsliding provisions require that effluent limitations in a reissued permit be as stringent as those in the previous permit, with some exceptions in which limitations may be relaxed. WQBEL calculations and compliance with anti-backsliding requirements are discussed for each pollutant with a WQBEL in Fact Sheet sections IV.C.4.b and IV.C.4.i.

Because the RPA showed no reasonable potential for lead, nickel, cyanide, chlorodibromomethane, 4,4'-DDE, and dieldrin at Discharge Point 002, this Order does not retain the limitations on these pollutants from the previous permit. State Water Board Order WQ 2001-16 found, "Anti-backsliding does not necessarily dictate that a pollutant that was limited in a prior permit must have a limit in a later permit, even though the pollutant has never been detected and its discharge does not have the Reasonable Potential to cause or contribute to a water quality standards violation." The logic of State Water Board Order WQ 2001-16 also applies to situations where a pollutant is detected, but no longer triggers reasonable potential. The removal of limits for these pollutants is therefore consistent with State Water Board Order WQ 2001-16 and anti-backsliding requirements.

Technology-based limitations in this Order for Discharge Point 002 are higher (appear less stringent) than corresponding limitations in the previous permit. The method for deriving these limits is presented in the *Effluent Limitations Guidelines for the Petroleum Refining Point Source Category* (40 CFR 419) and explained in Attachment F-1. The derivation of these limits depends on the process configuration of the refinery, which, in turn, depends on the feedstock rate of each process. Based on information the Discharger provided in its Report of Waste Discharge, during the term of the previous permit, feedstock rates for certain refinery processes increased, resulting in different "process configuration values" used in the derivation of effluent limitations and higher effluent limitations. Such a change in effluent limitations is consistent with CWA section 402(o)(2)(A), which allows a reissued permit to include less stringent limitations when a material and substantial alteration to the permitted facility has occurred after the previous limitations became effective. In these circumstances, technology-based effluent limitations are still consistent with 40 CFR 419; however, material changes in refinery processes have resulted in different factors to be considered when effluent limitations are derived.

This Order does not retain limits on settleable solids from the previous permit because the Discharger provides secondary treatment and settleable solids limitations are technology-based effluent limitations for primary treatment. The Basin Plan no longer requires settleable solids limits. The Regional Water Board amended it in 2004, in part, because these limits had been mistakenly applied to secondary and advanced treatment plants.

2. Antidegradation

Antidegradation policies require that existing water quality be maintained unless degradation is justified based on specific findings. This Order allows a minor increase in flow and increased technology-based mass limits for several pollutants. These increases are related to the Clean Fuel Expansion Project (CFEP) the Discharger implemented during the previous permit term

and other process configuration changes, but not to an increase in crude throughput. The permitted discharge is consistent with antidegradation policies because the minor degradation associated with the permitted discharge is necessary to accommodate important socioeconomic interests within the San Francisco Bay Region, as described below.

a. Increased Flows and Pollutant Mass Discharges

The CFEP consisted of expanding the hydrocracking facilities and sulfur recovery units; replacing the sulfur loading rack; and constructing a new sulfur recovery plant, butane loading rack, and hydrogen plant, which Air Liquide operates. The expanded hydrocracking facilities include a wash-water recycling loop to ensure no net increase in stripped sour water flow to the Selenium Reduction Plant. The CFEP allows the Facility to process heavy gas oil that was previously exported, and to produce additional cleaner-burning gasoline and ultra-low sulfur diesel fuels. The Discharger completed the CFEP in 2009 and placed the new and expanded process units into operation between July and October 2009.

(1) Flows

The possible effects on flow are discussed below based on Discharger projections and available data. Because the CFEP has operated for just over a year, data on increased flow is limited and may not be sufficient to demonstrate the project's full effects. The potential flow increases appear to be minor.

a) The Discharger projected that the average dry-weather flow at Discharge Point 002 (excluding the stormwater the Facility treats) would increase about 4 percent from approximately 2.7 MGD to approximately 2.8 MGD due to a 68 gallon per minute increase in boiler water blowdown and cooling tower blowdown flow. Actual dry-weather flow in 2010 was approximately 2.8 MGD, which differed little from the average flow from 2005 though 2010 of approximately 2.8 MGD.

b) The Discharger projected that the average flow at Discharge Point 003 would increase by about 0.3 percent from approximately 35.3 MGD to approximately 35.4 MGD due to a 75 gallon per minute increase in neutralized demineralizer backwash water flow. Actual average dry-weather flow in 2010 was approximately 35.5 MGD, which was slightly less than the average flow of approximately 35.7 MGD from 2005 through 2009.

(2) Pollutant Mass Discharges

This Order increases technology-based mass limits for BOD, COD, TSS, oil and grease, phenolic compounds, ammonia, sulfide, total chromium, and hexavalent chromium at Discharge Point 002 consistent with the Effluent Limitations Guidelines for the Petroleum Refining Point Source Category (40 CFR 419). The higher limits result from increased feedstock rates to certain refinery processes (some of which are related to the CFEP discussed above). Table F-18 compares the limits in the previous permit with those in this Order.

The mass of these pollutants actually discharged is unlikely to increase much, if at all, despite the higher limits. The Discharger proposes no changes to its treatment process, and no decrease in treatment is authorized. Furthermore, the Discharger cannot manipulate its treatment processes to adjust effluent levels of these pollutants independently of others. To maintain compliance with other effluent limits, such as those for selenium, copper, and PAHs, the Discharger will have to at least maintain its existing treatment performance.

Table F-18. Comparison of Historical Effluent Limitations and Effluent Limitations in this Order for Discharge Point 002

Parameter	Units	Effluent Limitations in Previous Permit		Effluent Limitations in this Order	
		Monthly Average	Maximum Daily	Monthly Average	Maximum Daily
Biochemical Oxygen Demand (BOD) (5-day @ 20 °C)	lbs/day	850	1,500	910	1,600
Total Suspended Solids (TSS)	lbs/day	700	1,100	730	1,100
Chemical Oxygen Demand (COD)	lbs/day	5,900	11,000	6,300	12,000
Oil and Grease	lbs/day	250	460	260	500
Phenolic Compounds	lbs/day	4.7	11	5.9	12
Ammonia as N	lbs/day	460	1,000	500	1,100
Sulfide	lbs/day	4.8	10	4.8	11
Total Chromium	lbs/day	5.4	16	7.7	22
Hexavalent Chromium	lbs/day	0.45	1.0	0.63	1.4

b. Antidegradation Analysis

Administrative Procedures Update (APU) No. 90-004 provides guidance for implementing State and federal antidegradation requirements in State Water Board Resolution No. 68-16 and 40 CFR 131.12. It states that a simple antidegradation analysis is adequate in the following circumstances:

1) a reduction in water quality would be spatially localized or limited with respect to the waterbody,
2) a reduction in water quality would be temporally limited,
3) a proposed action would produce minor effects that would not result in a significant reduction of water quality, or
4) a proposed activity has been approved in a General Plan and has been adequately subjected to the environmental and economic analysis required in an EIR.

In this case, the effects of any minor flow increase or increased mass discharge will be spatially limited within 68,000-acre San Pablo Bay. Pollutant discharges from Discharge Point 002 will be diluted by at least 37:1 as they enter San Pablo Bay. Increased flows from Discharge Location 003 will be greatly diluted by once-through cooling water.

Degradation, if any, will be minimal and not readily observable in vast San Pablo Bay. Since the changes would not significantly reduce San Pablo Bay water quality, a simple antidegradation analysis is sufficient, and a complete antidegradation analysis is unwarranted.

Existing water quality is and will remain adequate to protect existing San Pablo Bay beneficial uses, particularly with respect to the pollutants for which this Order increases mass-based limits. This Order contains water quality-based effluent limitations to ensure that the discharge will not cause or contribute to any exceedences of water quality objectives intended to protect San Pablo Bay beneficial uses.

State Water Board Resolution No. 68-16 and 40 CFR 131.12 allow degradation if the change is consistent with the maximum benefit to the people of the State. The minimal degradation described here is necessary to accommodate important economic and social development in the San Francisco Bay Region. The potential degradation allows the Discharger to increase production of clean-burning gasoline, jet fuel, and diesel from heavy gas oil for the California market by upgrading the Facility's capability to process heavy gas oils. Given the Region's reliance on such fuels and the importance of these fuels to California's economy, accommodating this activity through minor water quality degradation serves to benefit the people of the State overall. As required by antidegradation policies, this Order continues to subject the discharge to best practicable treatment or control through the technology-based effluent limitations, and it includes water quality-based effluent limitations to ensure that no pollution or nuisance will occur and beneficial uses will continue to be protected.

c. Selenium

This Order maintains the status quo with respect to selenium; it does not allow a concentration or mass increase. The Discharger has indicated that selenium levels may increase because the wash-water recycling loop may increase the concentrations of selenium in the stripped sour water flow to the Selenium Reduction Plant and Wastewater Treatment Plant. From October 2009 to November 2010, the average selenium concentration at Discharge Point 002 was 23 ug/L, roughly 10 percent higher than the average selenium concentration from January 2005 through September 2009 of 21 ug/L.

The hydrocracker complex is the only source of selenium-containing wastewater affected by the CFEP, and contributes only 15 percent of the selenium loading to the Selenium Reduction Plant. Selenium is removed efficiently from this waste stream by the Selenium Reduction Plant. Based on a 95 percent combined selenium removal efficiency in the Selenium Reduction Plant and Biological Treatment Plant, the estimated selenium increase would be 0.05 pounds per day (lbs/day), compared to the current average discharge of 0.47 lbs/day. To comply with this Order's selenium effluent limitation, this increase may be offset by further identifying variables that impact treatment reliability and improving its operation to control those variables.

V. RATIONALE FOR RECEIVING WATER LIMITATIONS

Receiving water limitations are retained from the previous permit (with the exception of the previous ammonia limitations at Discharge Point 002) and reflect Basin Plan Chapter 3 water quality objectives.

Ammonia receiving water limits are unnecessary because this Order contains ammonia effluent limitations.

VI. RATIONALE FOR MONITORING AND REPORTING REQUIREMENTS

The principal purposes of a monitoring program are to:

- Document compliance with waste discharge requirements and prohibitions,
- Facilitate self-policing in the prevention and abatement of pollution arising from waste discharge, and
- Develop or assist in the development of limitations, discharge prohibitions, national standards of performance, pretreatment and toxicity standards, and other standards, and prepare water and wastewater quality inventories.

The Monitoring and Reporting Program (MRP) is a standard requirement in almost all NPDES permits, including this Order. It contains definitions of terms and sets out requirements for reporting routine monitoring data in accordance with NPDES regulations, the CWC, and Regional Water Board policies. The MRP also defines the sampling stations and frequency, the pollutants to be monitored, and additional reporting requirements. Pollutants to be monitored include all parameters for which effluent limitations are specified. Monitoring for additional constituents, for which no effluent limitations are established, is also required to provide data for future RPAs.

A. Influent Monitoring

As discussed in Fact Sheet section IV.C.4.k above, this Order allows intake water credits for copper, nickel, and dioxin-TEQ at Discharge Point 003. Therefore, this Order requires influent monitoring at the once-through cooling water intake structure (Monitoring Point I-001) for these parameters.

The previous permit contained monitoring requirements for several other priority pollutants, as well as total organic carbon. Monitoring data for many of these parameters (e.g., selenium, 4,4'-DDE, and dieldrin) were reported below detection levels or were not detected. For others, maximum reported concentrations were reported at levels not of concern in terms of maintaining water quality standards in the receiving water. Therefore, this Order does not retain influent monitoring for these parameters.

B. Effluent Monitoring

The SIP states that the Regional Water Board will require periodic monitoring for pollutants for which criteria or objectives apply and for which no effluent limitations have been established. This Order requires the Discharger to conduct annual monitoring at Monitoring Locations EFF-002 and EFF-003 for all CTR priority pollutants, as discussed in the MRP (Attachment E) and in accordance with the Regional Standard Provisions (Attachment G). The Regional Water Board will use the additional data in the future to conduct an RPA and determine if WQBELs are required.

To demonstrate compliance with effluent limitations, this Order retains most effluent monitoring requirements from the previous permit. Important changes are summarized below.

1. Discharge Point 002

Because the RPA showed no reasonable potential for lead, nickel, cyanide, chlorodibromomethane, dieldrin, and 4,4'-DDE, the monitoring frequencies for these pollutants have been decreased to once per year to be consistent with all other priority pollutants. Conversely, this Order requires more frequent monitoring for bis(2-ethylhexyl)phthalate and total PAHs to determine compliance with the new effluent limitations. This Order does not require mercury or PCBs monitoring because Order No. R2-2007-0077 contains such monitoring requirements.

2. Discharge Point 003

Because the RPA showed no reasonable potential for lead, dieldrin, selenium, and 4,4'-DDE, the monitoring frequencies for these pollutants have been decreased to once per year to be consistent with all other priority pollutants.

3. Discharge Point 004

This Order essentially retains the existing monitoring requirements from the previous permit.

C. Whole Effluent Toxicity Testing Requirements

1. **Acute Toxicity.** Weekly 96-hour bioassay testing is required at Monitoring Location EFF-002 to demonstrate compliance with the acute toxicity effluent limitations.

2. **Chronic Toxicity.** Chronic whole effluent toxicity testing is required at Monitoring Location EFF-002 twice per year to demonstrate compliance with the chronic toxicity effluent limitation.

D. Receiving Water Monitoring

On April 15, 1992, the Regional Water Board adopted Resolution No. 92-043, directing the Executive Officer to implement the San Francisco Bay Regional Monitoring Program for Trace Substances. Subsequently, the Executive Officer required major permit holders in the Region, under authority of CWC section 13267, to report on the water quality of the estuary. These permit holders responded by participating in a collaborative effort through the San Francisco Estuary Institute. This effort has come to be known as the Regional Monitoring Program (RMP). This Order specifies that the Discharger shall continue to participate in the RMP, which involves collection of data on pollutants and toxicity in the water, sediment, and biota of the estuary.

VII. RATIONALE FOR PROVISIONS

A. Standard Provisions (Provision VI.A)

Federal Standard Provisions, which in accordance with 40 CFR 122.41 and 122.42 apply to all NPDES discharges and must be included in every NPDES permit, are provided in Attachment D of this Order. 40 CFR 122.41(a)(1) and (b) through (n) establish conditions that apply to all state issued NPDES permits. These conditions must be incorporated into permits either expressly or by reference. 40 CFR 123.25(a)(12) allows the State to omit or modify conditions to impose more stringent requirements. The Regional Standard Provisions (Attachment G) supplement the Federal

Standard Provisions. In accordance with 40 CFR 123.25, this Order omits federal conditions that address enforcement authority specified in 40 CFR 122.41(j)(5) and (k)(2) because the enforcement authority under CWC is more stringent. In lieu of these conditions, this Order hereby incorporates by reference CWC section 13387(e).

B. Monitoring and Reporting Requirements (Provision VI.B)

The Discharger is required to monitor the permitted discharges in order to evaluate compliance with permit conditions. Monitoring requirements are contained in the MRP (Attachment E) and the Regional Standard Provisions (Attachment G). This provision requires compliance with these documents and is authorized by40 CFR122.41(h) and (j), and CWC sections 13267 and 13383.

C. Special Provisions (Provision VI.C)

1. Reopener Provisions

These provisions are based on 40 CFR 122.63 and allow modification of this Order and its effluent limitations as necessary in response to updated WQOs, regulations, or other new relevant information that may be established in the future and other circumstances allowed by law.

2. Special Studies and Additional Monitoring

a. **Effluent Characterization Study.** This Order does not include effluent limitations for the selected constituents addressed in the Regional Standard Provisions (Attachment G) that do not demonstrate Reasonable Potential, but this provision requires the Discharger to continue monitoring for these pollutants as described in the Regional Standard Provisions and specified in the MRP. If concentrations of these constituents increase significantly, this provision requires the Discharger to investigate the sources of the increases and establish remedial measures if the increases result in reasonable potential to cause or contribute to an excursion above water quality standards. This provision is based on the Basin Plan, the SIP, and CWC 13267.

b. **Ambient Background Receiving Water Study.** This provision is based on the Basin Plan, the SIP, CWC 13267, and the Regional Standard Provisions (Attachment G). As indicated in the Order, this requirement may be met by participating in a collaborative study.

c. **Receiving Waters and Effluent Selenium Characterization Study – Discharge Point 002.** This Order requires the Discharger to characterize (a) the concentrations and speciation of selenium in effluent and receiving water, (b) the variability of selenium in the discharge, (c) the potential for uptake and conversion of selenium to more bioavailable forms, (d) mixing and dilution in the receiving water, and (e) the ability to comply with any more-stringent selenium criteria that may become effective in the foreseeable future. These requirements are reasonable and warranted because the Discharger discharges selenium into San Pablo Bay from Discharge Point 002. Based on the results of the studies, the Regional Water Board will be able to evaluate better how the Discharger contributes to the selenium impairment of San Francisco Bay. The Regional Water Board may use the data to evaluate dilution credits, characterize selenium bioaccumulation potential and ecological risk, and evaluate receiving water quality with respect to selenium. The Regional Water

Board may also use the data to determine whether receiving water quality correlates with seasonal or other environmental factors. CWC section 13267 authorizes the Regional Water Board to require these studies.

d. **Thermal Plume Monitoring at Discharge Point 003.** According to the Thermal Plan, the Facility's discharge at Discharge Point 003 is "thermal waste" because the discharge contains cooling water used for the purpose of transporting heat. The discharge is an existing discharge because the Facility started discharging once-through cooling water prior to State Water Board adoption of the Thermal Plan. The Basin Plan and Thermal Plan require existing discharges to enclosed bays to be protective of beneficial uses. The Discharger submitted a thermal study in February 2001 that concluded that its cooling water discharge at Discharge Point 003 did not adversely affect San Pablo Bay beneficial uses, although there was indication that some species living in the water column avoided the thermal plume. The previous permit required a thermal plume study to more fully determine the impact of the cooling water discharge on aquatic life.

The Discharger outlined its new study plan in *Submittal of Study Plan Pursuant to Order #R2-2005-0030, Provision #9: Thermal Plume Monitoring* (Garcia and Associates, November 22, 2005) (hereinafter Monitoring Plan). The Monitoring Plan proposed analysis of temperatures in the on-shore discharge channels and retention pond and near Discharge Point 003. It also indicated that the new study would evaluate the cooling water discharge system's overall effectiveness at reducing the discharge temperature, determine if any specific management alternatives would better cool the discharge, estimate the flow volumes in the two channels, and calculate detention time in the cooling pond. The Regional Water Board conditionally approved the Monitoring Plan by letter dated April 25, 2006.

The Discharger submitted the report *Cooling Water Discharge Thermal Plume Study, 2006-2007* (hereinafter 2007 Thermal Plume Study), prepared by Tenera Environmental, on September 27, 2007. The 2007 Thermal Plume Study was a "Phase 1" study that characterized the thermal plume using tidal, meteorological, bathymetric, and temperature data collected from May 2006 to July 2007 at 33 monitoring stations located onshore and in San Pablo Bay; and recommended further study be done as Phase 2. The Phase 2 study was to include (1) assessment of potential biological effects of the thermal plume, (2) continued thermal plume monitoring, and (3) temperature monitoring at the large, shallow cove immediately south of Point Pinole (and Discharge Point 003), which may produce a natural plume of elevated-temperature water via solar heating. The Discharger has not conducted the Phase 2 study; therefore, it has yet to characterize impacts of the thermal waste discharge on aquatic life. It also has yet to identify any management alternatives to reduce temperature levels in the discharge or include estimates of flow and detention time.

This Order requires further temperature monitoring as recommended by the 2007 Thermal Plume Study. The Discharger is required to monitor the nearby cove for the discharge's impacts on ambient temperature, to determine the thermal plume's impact on aquatic life, and to recommend and implement management alternatives to reduce the temperature of the cooling water discharge. This Order requires that the study be acceptable to the Executive Officer; however, unlike the previous permit, it does not require Executive

Officer approval prior to the Discharger moving forward with the remaining work. This had caused the Discharger to not move forward with the work previously.

e. **Once-Through Cooling Water Intake Structure.** The previous permit required the Discharger to demonstrate that the submerged cylindrical wedgewire screens currently installed on the once-through cooling water intake structure comply with Clean Water Act section 316(b) and 40 CFR 125.94(a) requirements to reduce impingement and entrainment of aquatic organisms.

On February 28, 2006, the Discharger submitted a Technology Installation and Operation Plan (*Technology Installation and Operation Plan,* Tenera Environmental, February 2006) documenting the wedgewire screens' effectiveness, compliance with USEPA performance standards, and installation in accordance with the manufacturer's requirements. The configuration of the wedgewire screens is estimated to virtually eliminate impingement of adult and juvenile fishes (and macroinvertebrates) and significantly reduce the entrainment of larval fishes. The screens were installed with an orientation that maximizes their performance with respect to tidal and Delta outflow as well as local current patterns at the intake structure. The location of the intake structure provides effective sweeping flow velocities that, combined with the low through-screen velocities at maximum pumping rates, minimize entrainment of larval fishes and invertebrates.

The Discharger maintains and uses a Maintenance Procedure Manual for the intake structure consisting of:

- Supervisor's, Maintenance and Operator's Logs for direction, record-keeping, and trouble-shooting purposes;
- Standard Operating Procedures; and
- Electronic recordkeeping (SAP) of scheduled maintenance activities at the intake structure that are updated as needed.

This Order requires the Discharger to continue to operate, maintain, and inspect the salt water intake structure in accordance with its Maintenance Procedure Manual. Further, this Order requires an annual report that certifies the proper operation and maintenance of the once-through cooling water intake structure, identifying any operational problems or necessary changes to the Maintenance Procedure Manual; and identifies work planned or completed that is beyond routine maintenance. The Discharger shall submit this annual status report annually with its annual self-monitoring report. This requirement is to ensure compliance with Clean Water Act section 316(b) and 40 CFR 125.94(a)

f. **Cooling Tower Replacement Feasibility Evaluation.** The previous permit also required the Discharger to evaluate the feasibility of installing cooling towers to replace its once-through cooling system. The Discharger proposed a Cooling Tower Replacement Feasibility Evaluation that would incorporate the following four elements:

- An evaluation of existing exchangers;
- A conceptual design for a closed loop cooling tower system;
- An impacts evaluation on process operations; and
- Identification of costs and a construction timetable.

Because the Discharger was awaiting review by the Regional Water Board, it has not yet conducted the evaluation, so this Order requires its completion.

g. **Dilution Modeling Update and Verification**. As described in Fact Sheet section IV.C.4.a, the Discharger provided a dilution modeling study in December 1989 (*Field Dye Tracer Studies and Initial Dilution Modeling of the Process Wastewater Effluent from the UNOCAL San Francisco Refinery Diffuser NPDES Permit No. CA0005053*). There is no compelling evidence that this study's results are not valid as justification for the dilution credits in this permit. However, because it was conducted over 20 years ago, it is reasonable to verify its results with a new updated study for the next permit reissuance.

3. Best Management Practices Program (BMP Program) and Pollution Minimization Program (PMP)

The provisions related to PMP development and implementation are based on Basin Plan section 4.12.2 and SIP section 2.4.5.

The provision related to the update and implementation of the BMP Program to address miscellaneous non-stormwater discharges through Discharge Point 004 is based on USEPA regulations at 40 CFR 122.44(k). The Discharger's BMP's are established by its *Best Management Practices Manual,* incorporated by reference in its Stormwater Pollution Prevention Plan.

4. Other Special Provisions

a. Copper Action Plan

This provision is based on Basin Plan sections 7.2.2.2 and 7.2.2.5. It is necessary to ensure that use of copper site-specific objectives is consistent with antidegradation policies.

b. Copper Action Plan

This provision is based on Basin Plan sections 7.2.2.2 and 7.2.2.5. It is necessary to ensure that use of cyanide site-specific objectives is consistent with antidegradation policies.

c. Mass and Concentration Effluent Limit Adjustments.

This provision requires the Discharger, prior to applying effluent limit adjustments calculated in accordance with section IV.A.7, to demonstrate that such adjustments will not create a zone of aquatic toxicity near Discharge Point 002 or otherwise impair beneficial uses in the vicinity of its discharge.

d. Stormwater Pollution Prevention Plan and Annual Report

This provision is based on Basin Plan section 4.8, statewide stormwater requirements for industrial facilities, and applicable USEPA regulations. It is retained from the previous permit.

VIII. PUBLIC PARTICIPATION

The Regional Water Board is considering the issuance of Waste Discharge Requirements (WDRs) that will serve as an NPDES permit for the ConocoPhillips San Francisco Refinery. As a step in the WDR adoption process, the Regional Water Board developed tentative WDRs. The Regional Water Board encourages public participation in the WDR adoption process.

A. Notification of Interested Parties

The Regional Water Board notified the Discharger and interested agencies and persons of its intent to prescribe WDRs for the discharge and provided an opportunity to submit written comments and recommendations. Notification was provided by publication in the Contra Costa Times on February 11, 2011.

B. Written Comments

Staff determinations are tentative. Interested persons are invited to submit written comments concerning these tentative WDRs. Comments must be submitted either in person or by mail to the Executive Officer at the Regional Water Board at the address on the cover page of this Order, to the attention of John Madigan.

To receive a full response from Regional Water Board staff and to be considered by the Regional Water Board, written comments should be received at the Regional Water Board offices by **5:00 p.m. on March 14, 2011.**

C. Public Hearing

The Regional Water Board will hold a public hearing on the tentative WDRs during its regular meeting on the following date and time and at the following location:

Date:	**May 11, 2011**
Time:	9:00 am
Location:	Elihu Harris State Office Building 1515 Clay Street, 1st Floor Auditorium Oakland, CA 94612

Contact: John Madigan**,** (510) 622-2405, email JMadigan@waterboards.ca.gov

Interested persons are invited to attend. At the public hearing, the Regional Water Board will hear testimony, if any, pertinent to the discharge, WDRs, and permit. Oral testimony will be heard; however, for accuracy of the record, important testimony should be in writing.

Dates and venues may change. The Regional Water Board's Web address is http://www.waterboards.ca.gov/sanfranciscobay where one can access the current agenda for changes in dates and locations.

D. Waste Discharge Requirements Petitions

Any aggrieved person may petition the State Water Board to review the decision of the Regional Water Board regarding the WDRs. The petition must be submitted within 30 days of the Regional Water Board's action to the following address:

State Water Resources Control Board
Office of Chief Counsel
P.O. Box 100, 1001 I Street
Sacramento, CA 95812-0100

E. Information and Copying

The Report of Waste Discharge, related documents, tentative effluent limitations and special provisions, comments received, and other information are on file and may be inspected at the address above at any time between 8:45 a.m. and 5:00 p.m., Monday through Friday. Copying of documents may be arranged by calling 510-622-2300.

F. Register of Interested Persons

Any person interested in being placed on the mailing list for information regarding the WDRs and NPDES permit should contact the Regional Water Board, reference this facility, and provide a name, address, and phone number.

G. Additional Information

Requests for additional information or questions regarding this order should be directed to John Madigan at 510-622-2405 (e-mail at JMadigan@waterboards.ca.gov).

ATTACHMENT F-1

Derivation of Technology-Based Effluent Limitations
ConocoPhillips San Francisco Refinery

References

1. 40 CFR 419, Subpart B – Cracking Subcategory, *Effluent Limitation Guidelines and New Source Performance Standards for the Petroleum Refining Point Source Category*

2. *Development Document for Effluent Limitations Guidelines and New Source Performance Standards for the Petroleum Refining Point Source Category,* EPA/4401-82/014 (1982)

3. *Guide for the Application of Effluent Limitations Guidelines for the Petroleum Refining Industry,* USEPA Office of Water Regulations and Standards (1985)

4. ConocoPhillips, San Francisco Refinery, NPDES Application for Permit Renewal, NPDES Permit No. CA0005053 (March 4, 2010)

5. Refinery Production Data from NPDES Application for Permit Renewal

Background

Clean Water Act (CWA) section 301(b) and 40 CFR 122.44(a) require that permits include technology-based effluent limitations based on several levels of control:

- Best practicable treatment control technology (BPT) represents the average of the best performance by plants within an industrial category or subcategory. BPT standards apply to toxic, conventional, and non-conventional pollutants. Conventional pollutants include biochemical oxygen demand (BOD), total suspended solids (TSS), fecal coliform, pH, and oil and grease.

- Best available technology economically achievable (BAT) represents the best existing performance of treatment technologies that are economically achievable within an industrial point source category. BAT standards apply to toxic and non-conventional pollutants.

- Best conventional control technology (BCT) represents the control from existing industrial point sources of conventional pollutants. The BCT standard is established after considering the "cost reasonableness" of the relationship between the cost of attaining a reduction in effluent discharge and the benefits that would result, and also the cost effectiveness of additional industrial treatment beyond BPT.

- New source performance standards (NSPS) represent the best available demonstrated control technology standards for new sources. The intent of NSPS guidelines is to set limits that represent state-of-the-art treatment technology for new sources.

The CWA requires USEPA to develop effluent limitations, guidelines, and standards for many source categories representing application of BPT, BAT, BCT, and NSPS. The discharge authorized by this Order must meet the minimum federal technology-based requirements based on the Effluent Limitations Guidelines (ELGs) for the Petroleum Refining Point Source Category (Cracking Subcategory) in 40 CFR 419.20 et seq. Because the refinery was constructed prior to 1982, when USEPA established the

NSPS requirements, it is not subject to the NSPS requirements. It is, however, subject to the BPT, BAT, and BCT requirements. The most stringent of the BPT, BAT, and BCT limits apply.

The Cracking Subcategory ELGs cover process wastewater, ballast water, contaminated runoff, and once-through cooling water. These terms are defined in 40 CFR 401.11(q) and 40 CFR 419.11:

- The term "process waste water" means any water that, during manufacturing or processing, comes into direct contact with, or results from the production or use of, any raw material, intermediate product, finished product, by-product, or waste product.

- The term "ballast" means the flow of water from a ship (e.g., cargo hold wash water). The ELGs cover ballast water that is treated along with refinery wastewater in the main treatment system.

- The term "runoff" means the flow of stormwater resulting from precipitation coming into contact with petroleum refinery property. The term "contaminated runoff" means runoff that comes into contact with any raw material, intermediate product, finished product, byproduct, or waste product located on petroleum refinery property.

- The term "once-through cooling water" means water used for the purpose of heat removal that does not come into direct contact with any raw material, intermediate product, or finished product.

Many of the technology-based effluent limits in 40 CFR 419 Subpart B are based on the Discharger's production rate. The Discharger's current maximum production rate is 77,360 barrels per day (bbls/day).

Limitations for Process Wastewater

Process wastewater is discharged through Discharge Point 002. The ELGs include BPT, BAT, and BCT limits for process wastewater. The BPT limits cover 5-day BOD (BOD_5), TSS, chemical oxygen demand (COD), oil and grease, phenolic compounds, ammonia, sulfide, total chromium, hexavalent chromium, and pH. The BAT and BCT limits are the same as the BPT limits, with three exceptions: the BAT limits for phenolic compounds, total chromium, and hexavalent chromium must be calculated separately to determine which limits are more stringent.

To derive the BPT limits for process wastewaters, size factors and process factors are determined as follows.

- <u>Size Factor.</u> At a crude processing rate of 77,360 bbls/day, the size factor is 1.13 based on 40 CFR 419.22(b)(1), 40 CFR 419.23(b)(1), and 40 CFR 419.24(b)(1).

- <u>Process Factor.</u> At a crude processing rate of 77,360 bbls/day, the process factor is 1.89 based on 40 CFR 419.22(b), 40 CFR 419.23(b), and 40 CFR 419.24(b). The process factor is based on a processing configuration of 13.5, as calculated below.

  As shown by example in 40 CFR 419.42(b)(3), the processing configuration is the sum of the individual processing configurations for each of several processes based on each process feedstock rate (called "capacity" in 40 CFR 419.42(b)(3)). The processes included in the calculation include crude, cracking and coking, lube, and asphalt processes. These processes correspond to the process groups listed within the *Guide for the Application of Effluent Limitations Guidelines for the Petroleum Refining Industry* (page 19). The Discharger does not report lube or asphalt processes, so lube processes are not considered in determining process factors. Each feedstock rate is multiplied by the process to feedstock

ratio (called "capacity relative to the throughput" in 40 CFR 419.42(b)(3)) and a weight factor specified for each process to determine the "processing configuration" for each process. Table F-1A sets forth the calculations based on a throughput of 77,360 bbls/day.

Table F-1A. Processing Configurations

Process	Process Feedstock Rate ("Capacity") (x 1,000 bbls/day)	Process/Feedstock Ratio ("Capacity relative to throughput")	Weight Factor	Processing Configuration
Crude				
Atm. Dist.	94.66	1.22		
Vac. Dist.	54.22	0.70		
Desalt.	31.78	0.41		
Total	180.65	2.34	1	2.34
Cracking and Coking				
Hydrocracking	51.75	0.67		
Coking	25.45	0.33		
Hydrotreating	66.69	0.86		
Total	143.89	1.86	6	11.16
Lube	--	--	13	0
Asphalt	--	--	12	0
Total Refinery Processing Configuration				**13.50**

Based on the size factor of 1.13 and the process factor of 1.89, the following table shows the derivation of the BPT limits at a production rate of 77,360 bbls/day. In addition to these limits, the ELGs specify as a BPT limit that the pH be within 6.0 and 9.0.

Table F-1B. BPT Limitations for Process Wastewaters

	Preliminary Effluent Limitation Factor [1]		Size Factor	Process Factor	Feed Stock Rate	Effluent Limitation [2]	
	Max Daily	Avg Monthly				Max Daily	Avg Monthly
BOD_5	9.9	5.5	1.13	1.89	77.36	1,636	909
TSS	6.9	4.4	1.13	1.89	77.36	1,140	727
COD	74.0	38.4	1.13	1.89	77.36	12,226	6,344
Oil & Grease	3.0	1.6	1.13	1.89	77.36	496	264
Phenolics (4AAP)	0.074	0.036	1.13	1.89	77.36	12.2	5.9
Ammonia (as N)	6.6	3.0	1.13	1.89	77.36	1,090	496
Sulfide	0.065	0.029	1.13	1.89	77.36	10.7	4.8
Total Chromium	0.15	0.088	1.13	1.89	77.36	25	15
Hexavalent Chromium	0.012	0.0056	1.13	1.89	77.36	2.0	0.9

[1] From 40 CFR 419.22(a) (pounds per 1000 bbls of feedstock)
[2] Pounds per day (lbs/day)

Because the BAT limits for phenolic compounds, total chromium, and hexavalent chromium are different than the BPT limits, they must be calculated separately to determine whether they are more stringent. The limits are based on feedstock rates for several processes multiplied by effluent limitation factors. The processes include crude, cracking and coking, lube, and reforming and alkylation, which correspond to the processes identified in the *Guide for the Application of Effluent Limitations Guidelines for the Petroleum Refining Industry* (page 20). The table below shows the feedstock rates for these processes.

Table F-1C. Feedstock Rates for Determining BAT Limitations

Process	Feedstock Rate
Crude	
Atmospheric Distillation	94.66
Vacuum Distillation	54.22
Desalting	31.78
Total	**180.66**
Cracking and Coking	
Hydrocracking	51.75
Delayed Coking	25.45
Hydrotreating	66.69
Total	**143.89**
Lube	
Total	**--**
Reforming and Alkylation	
Catalytic Reforming	29.40
Total	**29.40**

The following table shows the derivation of the BAT limits for phenolic compounds, total chromium, and hexavalent chromium based on the total feedstock rates above.

Table F-1D. BAT Limitations for Process Wastewater (Phenolic Compounds, Total Chromium, and Hexavalent Chromium)

Pollutant	Preliminary Effluent Limits Factor [a]		Feedstock Rate	Effluent Limits (pounds/day)	
	Max Daily	Avg Monthly		Max Daily	Avg Monthly
Phenolic Compounds					
Crude	0.013	0.0030	180.66	2.35	0.54
Cracking and Coking	0.147	0.036	143.89	21.15	5.18
Reforming and Alkylation	0.132	0.032	29.40	3.88	0.94
Limit (Sum)	--	--	--	**27.38**	**6.66**
Total Chromium					
Crude	0.011	0.004	180.66	1.99	0.72
Cracking and Coking	0.119	0.041	143.89	17.12	5.90
Reforming and Alkylation	0.107	0.037	29.40	3.15	1.09
Limit (Sum)	--	--	--	**22.26**	**7.71**

Pollutant	Preliminary Effluent Limits Factor [a]		Feedstock Rate	Effluent Limits (pounds/day)	
	Max Daily	Avg Monthly		Max Daily	Avg Monthly
Hexavalent Chromium					
Crude	0.0007	0.0003	180.66	0.13	0.05
Cracking and Coking	0.0076	0.0034	143.89	1.09	0.49
Reforming and Alkylation	0.0069	0.0031	29.40	0.20	0.09
Limit (Sum)	--	--	--	**1.42**	**0.63**

[1] From 40 CFR 419.22(a) (pounds per 1000 bbls of feedstock)

Based on these calculations, for total chromium and hexavalent chromium, the BAT limits are more stringent than the BPT limits. Therefore, the following table presents the technology-based effluent limits for process wastewater at the refinery. With the exception of pH, these limits are expressed in units of pounds per day.

Table F-1E. Summary of Technology-Based Process Wastewater Effluent Limitations

Pollutant	Effluent Limits [1],[2]	
	Max Daily	Avg Monthly
BOD_5	1,636	909
TSS	1,140	727
COD	12,227	6,344
Oil & Grease	496	264
Phenolics (4AAP)	12.2	5.9
Ammonia (as N)	1,090	496
Sulfide	10.7	4.8
Total Cr	22.26[3]	7.71[3]
Hex Cr	1.42[3]	0.63[3]
pH	6.0 – 9.0 pH units	

[1] Units are lbs/day, except for pH
[2] All technology-based limits for process wastewaters are based on BPT unless otherwise noted.
[3] Based on BAT.

Limitations for Ballast Water

Ballast water is discharged through Discharge Point 002. The ELGs include BPT, BAT, and BCT limits for ballast water at 40 CFR 419.22(c), 419.23(d), and 419.24(c). These ELGs refer to those at 40 CFR 419.12(c), 419.13(d), and 419.14(c). The BPT limits cover BOD_5, TSS, COD, oil and grease, and pH. The BAT and BCT limits are the same as the BPT limits.

Because ballast water is discharged through the same outfall as process wastewater, these limits provide an additional allocation that may be applied to the process wastewater limits when ballast water is treated with process wastewater. The process wastewater limits are mass-based, and the additional allocation is the mass equal to the ballast water flow times the concentration-based limits in the table below.

Table F-1F. Additional Ballast Water Allocations for Discharge Point 002

Pollutant	Units	Max Daily	Average Monthly
BOD	mg/L	48	26
TSS		33	21
COD		470	240
Oil and Grease		15	8
pH	s.u.	6.0 – 9.0	

Limitations for Contaminated Runoff Commingled with Process Wastewater

Contaminated runoff is discharged through Discharge Point 002 along with process wastewater. The ELGs include BPT, BAT, and BCT limits for contaminated runoff commingled with process wastewater at 40 CFR 419.22(e)(2), 419.23(f)(2), and 419.24(e)(2). The BPT limits cover BOD_5, TSS, COD, oil and grease, phenolic compounds, total chromium, hexavalent chromium, and pH. The BAT and BCT limits are the same as the BPT limits, with the exception of total chromium. The BAT limits for total chromium are more stringent.

Because contaminated runoff is discharged through the same outfall as process wastewater, these limits provide an additional allocation that may be applied to the process wastewater limits when contaminated runoff is treated with process wastewater. The process wastewater limits are mass-based, and the additional allocation is the mass equal to the contaminated runoff water flow times the concentration-based limits in the table below.

Table F-1G. Additional Contaminated Runoff Allocations for Discharge Point 002

Pollutant	Units	Max Daily[1]	Average Monthly[1]
BOD	mg/L	48	26
TSS		33	21
COD		360	180
Oil and Grease		15	8
Phenolic Compounds		0.35	0.17
Total Chromium		0.60	0.21
Hexavalent Chromium		0.062	0.028
pH	s.u.	6.0 – 9.0	

[1] All effluent limits reflect BPT requirements except limits for total chromium, which reflect BAT requirements.

Limitations for Contaminated Runoff NOT Commingled with Process Wastewater

Contaminated runoff is discharged through Discharge Point 004. This runoff is not discharged with process wastewater. The ELGs include BPT, BAT, and BCT limits for contaminated runoff not commingled with process wastewater at 40 CFR 419.22(e)(1), 419.23(f)(1), and 419.24(e)(1). The BPT limits, listed in the table below, cover total organic carbon and oil and grease. The BAT and BCT limits are the same as the BPT limits.

Table F-1H. Contaminated Runoff Limitations for Discharge Point 004

Pollutant	Units	Single Grab or Composite Sample
Total Organic Carbon	mg/L	110
Oil and Grease		15

Limitations for Once-Through Cooling Water

Once-through cooling water is discharged through Discharge Point 003. The ELGs include limits for once-through cooling water based on BPT and BAT. The ELGs found at 40 CFR 419.22(d) and 419.23(e) cover only total organic carbon, which may not exceed 5 mg/L.

CALIFORNIA REGIONAL WATER QUALITY CONTROL BOARD
SAN FRANCISCO BAY REGION

ATTACHMENT G

REGIONAL STANDARD PROVISIONS, AND MONITORING
AND REPORTING REQUIREMENTS
(SUPPLEMENT TO ATTACHMENT D)

For

NPDES WASTEWATER DISCHARGE PERMITS

March 2010

Table of Contents

I. STANDARD PROVISIONS - PERMIT COMPLIANCE 3
A. Duty to Comply 3
B. Need to Halt or Reduce Activity Not a Defense 3
C. Duty to Mitigate 3
1. Contingency Plan 3
2. Spill Prevention Plan 4
D. Proper Operation & Maintenance 4
1. Operation and Maintenance (O&M) Manual 4
2. Wastewater Facilities Status Report 5
3. Proper Supervision and Operation of Publicly Owned Treatment Works (POTWs) 5
E. Property Rights 5
F. Inspection and Entry 5
G. Bypass 5
H. Upset 5
I. Other 5
J. Stormwater 6
1. Stormwater Pollution Prevention Plan (SWPP Plan) 6
2. Source Identification 6
3. Stormwater Management Controls 7
4. Annual Verification of SWPP Plan 8
K. Biosolids Management 9
II. STANDARD PROVISIONS – PERMIT ACTION 9
III. STANDARD PROVISIONS – MONITORING 9
A. Sampling and Analyses 9
1. Use of Certified Laboratories 9
2. Use of Appropriate Minimum Levels 9
3. Frequency of Monitoring 10
B. Biosolids Monitoring 13
1. Biosolids Monitoring Frequency 13
2. Biosolids Pollutants to Monitor 13
C. Standard Observations 13
1. Receiving Water Observations 13
2. Wastewater Effluent Observations 14
3. Beach and Shoreline Observations 14
4. Land Retention or Disposal Area Observations 14
5. Periphery of Waste Treatment and/or Disposal Facilities Observations 15
IV. STANDARD PROVISIONS – RECORDS 15
A. Records to be Maintained 15
B. Records of monitoring information shall include 15
1. Analytical Information 15
2. Flow Monitoring Data 15
3. Wastewater Treatment Process Solids 16
4. Disinfection Process 16
5. Treatment Process Bypasses 16
6. Treatment Facility Overflows 17
C. Claims of Confidentiality – Not Supplemented 17

V. STANDARD PROVISIONS – REPORTING 17
A. Duty to Provide Information 17
B. Signatory and Certification Requirements 17
C. Monitoring Reports 17
1. Self Monitoring Reports 17
D. Compliance Schedules 22
E. Twenty-Four Hour Reporting 22
1. Spill of Oil or Other Hazardous Material Reports 22
2. Unauthorized Discharges from Municipal Wastewater Treatment Plants 23
F. Planned Changes 25
G. Anticipated Noncompliance 25
H. Other Noncompliance 25
I. Other Information 25
VI. STANDARD PROVISIONS – ENFORCEMENT 25
VII. ADDITIONAL PROVISIONS – NOTIFICATION LEVELS 25
VIII. DEFINITIONS 25

CALIFORNIA REGIONAL WATER QUALITY CONTROL BOARD
SAN FRANCISCO BAY REGION

REGIONAL STANDARD PROVISIONS, AND MONITORING AND REPORTING REQUIREMENTS (SUPPLEMENT TO ATTACHMENT D)

FOR

NPDES WASTEWATER DISCHARGE PERMITS

APPLICABILITY

This document applies to dischargers covered by a National Pollutant Discharge Elimination System (NPDES) permit. This document does not apply to Municipal Separate Storm Sewer System (MS4) NPDES permits.

The purpose of this document is to supplement the requirements of Attachment D, Standard Provisions. The requirements in this supplemental document are designed to ensure permit compliance through preventative planning, monitoring, recordkeeping, and reporting. In addition, this document requires proper characterization of issues as they arise, and timely and full responses to problems encountered. To provide clarity on which sections of Attachment D this document supplements, this document is arranged in the same format as Attachment D.

I. STANDARD PROVISIONS - PERMIT COMPLIANCE

A. Duty to Comply

Not Supplemented

B. Need to Halt or Reduce Activity Not a Defense

Not Supplemented

C. Duty to Mitigate

This supplements I.C. of Standard Provisions (Attachment D)

1. Contingency Plan

The Discharger shall maintain a Contingency Plan as originally required by Regional Water Board Resolution 74-10 and as prudent in accordance with current municipal facility emergency planning. The Contingency Plan shall describe procedures to ensure that existing facilities remain in, or are rapidly returned to, operation in the event of a process failure or emergency incident, such as employee strike, strike by suppliers of chemicals or maintenance services, power outage, vandalism, earthquake, or fire. The Discharger may combine the Contingency Plan and Spill Prevention Plan into one document. Discharge in violation of the permit where the Discharger has failed to develop and implement a Contingency Plan as described below will be the basis for considering the discharge a

willful and negligent violation of the permit pursuant to California Water Code Section 13387. The Contingency Plan shall, at a minimum, contain the provisions of a. through g. below.

a. Provision of personnel for continued operation and maintenance of sewerage facilities during employee strikes or strikes against contractors providing services.

b. Maintenance of adequate chemicals or other supplies and spare parts necessary for continued operations of sewerage facilities.

c. Provisions of emergency standby power.

d. Protection against vandalism.

e. Expeditious action to repair failures of, or damage to, equipment and sewer lines.

f. Report of spills and discharges of untreated or inadequately treated wastes, including measures taken to clean up the effects of such discharges.

g. Programs for maintenance, replacement, and surveillance of physical condition of equipment, facilities, and sewer lines.

2. Spill Prevention Plan

The Discharger shall maintain a Spill Prevention Plan to prevent accidental discharges and minimize the effects of such events. The Spill Prevention Plan shall:

a. Identify the possible sources of accidental discharge, untreated or partially treated waste bypass, and polluted drainage;

b. Evaluate the effectiveness of present facilities and procedures, and state when they became operational; and

c. Predict the effectiveness of the proposed facilities and procedures, and provide an implementation schedule containing interim and final dates when they will be constructed, implemented, or operational.

This Regional Water Board, after review of the Contingency and Spill Prevention Plans or their updated revisions, may establish conditions it deems necessary to control accidental discharges and to minimize the effects of such events. Such conditions may be incorporated as part of the permit upon notice to the Discharger.

D. Proper Operation & Maintenance

This supplements I.D of Standard Provisions (Attachment D)

1. Operation and Maintenance (O&M) Manual

The Discharger shall maintain an O&M Manual to provide the plant and regulatory personnel with a source of information describing all equipment, recommended operational

strategies, process control monitoring, and maintenance activities. To remain a useful and relevant document, the O&M Manual shall be kept updated to reflect significant changes in treatment facility equipment and operational practices. The O&M Manual shall be maintained in usable condition and be available for reference and use by all relevant personnel and Regional Water Board staff.

2. Wastewater Facilities Status Report

The Discharger shall regularly review, revise, or update, as necessary, its Wastewater Facilities Status Report. This report shall document how the Discharger operates and maintains its wastewater collection, treatment, and disposal facilities to ensure that all facilities are adequately staffed, supervised, financed, operated, maintained, repaired, and upgraded as necessary to provide adequate and reliable transport, treatment, and disposal of all wastewater from both existing and planned future wastewater sources under the Discharger's service responsibilities.

3. Proper Supervision and Operation of Publicly Owned Treatment Works (POTWs)

POTWs shall be supervised and operated by persons possessing certificates of appropriate grade pursuant to Division 4, Chapter 14, Title 23 of the California Code of Regulations.

E. Property Rights

Not Supplemented

F. Inspection and Entry

Not Supplemented

G. Bypass

Not Supplemented

H. Upset

Not Supplemented

I. Other

This section is an addition to Standard Provisions (Attachment D)

1. Neither the treatment nor the discharge of pollutants shall create pollution, contamination, or nuisance as defined by California Water Code Section 13050.

2. Collection, treatment, storage, and disposal systems shall be operated in a manner that precludes public contact with wastewater, except in cases where excluding the public is infeasible, such as private property. If public contact with wastewater could reasonably occur on public property, warning signs shall be posted.

3. If the Discharger submits a timely and complete Report of Waste Discharge for permit reissuance, this permit continues in force and effect until a new permit is issued or the Regional Water Board rescinds the permit.

J. Stormwater

This section is an addition to Standard Provisions (Attachment D)

These provisions apply to facilities that do not direct all stormwater flows from the facility to the wastewater treatment plant headworks.

1. Stormwater Pollution Prevention Plan (SWPP Plan)

The SWPP Plan shall be designed in accordance with good engineering practices and shall address the following objectives:

a. To identify pollutant sources that may affect the quality of stormwater discharges; and

b. To identify, assign, and implement control measures and management practices to reduce pollutants in stormwater discharges.

The SWPP Plan may be combined with the existing Spill Prevention Plan as required in accordance with Section C.2. The SWPP Plan shall be retained on-site and made available upon request of a representative of the Regional Water Board.

2. Source Identification

The SWPP Plan shall provide a description of potential sources that may be expected to add significant quantities of pollutants to stormwater discharges, or may result in non-stormwater discharges from the facility. The SWPP Plan shall include, at a minimum, the following items:

a. A topographical map (or other acceptable map if a topographical map is unavailable), extending one-quarter mile beyond the property boundaries of the facility, showing the wastewater treatment facility process areas, surface water bodies (including springs and wells), and discharge point(s) where the facility's stormwater discharges to a municipal storm drain system or other points of discharge to waters of the State. The requirements of this paragraph may be included in the site map required under the following paragraph if appropriate.

b. A site map showing the following:

(1) Stormwater conveyance, drainage, and discharge structures;

(2) An outline of the stormwater drainage areas for each stormwater discharge point;

(3) Paved areas and buildings;

(4) Areas of actual or potential pollutant contact with stormwater or release to stormwater, including but not limited to outdoor storage and process areas; material

loading, unloading, and access areas; and waste treatment, storage, and disposal areas;

(5) Location of existing stormwater structural control measures (i.e., berms, coverings, etc.);

(6) Surface water locations, including springs and wetlands; and

(7) Vehicle service areas.

c. A narrative description of the following:

(1) Wastewater treatment process activity areas;

(2) Materials, equipment, and vehicle management practices employed to minimize contact of significant materials of concern with stormwater discharges;

(3) Material storage, loading, unloading, and access areas;

(4) Existing structural and non-structural control measures (if any) to reduce pollutants in stormwater discharges; and

(5) Methods of on-site storage and disposal of significant materials.

d. A list of pollutants that have a reasonable potential to be present in stormwater discharges in significant quantities.

3. Stormwater Management Controls

The SWPP Plan shall describe the stormwater management controls appropriate for the facility and a time schedule for fully implementing such controls. The appropriateness and priorities of controls in the SWPP Plan shall reflect identified potential sources of pollutants. The description of stormwater management controls to be implemented shall include, as appropriate:

a. Stormwater pollution prevention personnel

Identify specific individuals (and job titles) that are responsible for developing, implementing, and reviewing the SWPP Plan.

b. Good housekeeping

Good housekeeping requires the maintenance of clean, orderly facility areas that discharge stormwater. Material handling areas shall be inspected and cleaned to reduce the potential for pollutants to enter the storm drain conveyance system.

c. Spill prevention and response

Identify areas where significant materials can spill into or otherwise enter stormwater conveyance systems and their accompanying drainage points. Specific material handling procedures, storage requirements, and cleanup equipment and procedures shall

be identified, as appropriate. The necessary equipment to implement a cleanup shall be available, and personnel shall be trained in proper response, containment, and cleanup of spills. Internal reporting procedures for spills of significant materials shall be established.

d. Source control

Source controls include, for example, elimination or reduction of the use of toxic pollutants, covering of pollutant source areas, sweeping of paved areas, containment of potential pollutants, labeling of all storm drain inlets with "No Dumping" signs, isolation or separation of industrial and non-industrial pollutant sources so that runoff from these areas does not mix, etc.

e. Stormwater management practices

Stormwater management practices are practices other than those that control the sources of pollutants. Such practices include treatment or conveyance structures, such as drop inlets, channels, retention and detention basins, treatment vaults, infiltration galleries, filters, oil/water separators, etc. Based on assessment of the potential of various sources to contribute pollutants to stormwater discharges in significant quantities, additional stormwater management practices to remove pollutants from stormwater discharges shall be implemented and design criteria shall be described.

f. Sediment and erosion control

Measures to minimize erosion around the stormwater drainage and discharge points, such as riprap, revegetation, slope stabilization, etc., shall be described.

g. Employee training

Employee training programs shall inform all personnel responsible for implementing the SWPP Plan. Training shall address spill response, good housekeeping, and material management practices. New employee and refresher training schedules shall be identified.

h. Inspections

All inspections shall be done by trained personnel. Material handling areas shall be inspected for evidence of, or the potential for, pollutants entering stormwater discharges. A tracking or follow up procedure shall be used to ensure appropriate response has been taken in response to an inspection. Inspections and maintenance activities shall be documented and recorded. Inspection records shall be retained for five years.

i. Records

A tracking and follow-up procedure shall be described to ensure that adequate response and corrective actions have been taken in response to inspections.

4. Annual Verification of SWPP Plan

An annual facility inspection shall be conducted to verify that all elements of the SWPP Plan are accurate and up-to-date. The results of this review shall be reported in the Annual Report to the Regional Water Board described in Section V.C.f.

K. Biosolids Management

This section is an addition to Standard Provisions (Attachment D)

Biosolids must meet the following requirements prior to land application. The Discharger must either demonstrate compliance or, if it sends the biosolids to another party for further treatment or distribution, must give the recipient the information necessary to ensure compliance.

1. Exceptional quality biosolids meet the pollutant concentration limits in Table III of 40 CFR Part 503.13, Class A pathogen limits, and one of the vector attraction reduction requirements in 503.33(b)(1)-(b)(8). Such biosolids do not have to be tracked further for compliance with general requirements (503.12) and management practices (503.14).

2. Biosolids used for agricultural land, forest, or reclamation shall meet the pollutant limits in Table I (ceiling concentrations) and Table II or Table III (cumulative loadings or pollutant concentration limits) of 503.13. They shall also meet the general requirements (503.12) and management practices (503.14) (if not exceptional quality biosolids) for Class A or Class B pathogen levels with associated access restrictions (503.32) and one of the 10 vector attraction reduction requirements in 503.33(b)(1)-(b)(10).

3. Biosolids used for lawn or home gardens must meet exceptional quality biosolids limits.

4. Biosolids sold or given away in a bag or other container must meet the pollutant limits in either Table III or Table IV (pollutant concentration limits or annual pollutant loading rate limits) of 503.13. If Table IV is used, a label or information sheet must be attached to the biosolids packing that explains Table IV (see 503.14). The biosolids must also meet the Class A pathogen limits and one of the vector attraction reduction requirements in 503.33(b)(1)-(b)(8).

II. STANDARD PROVISIONS – PERMIT ACTION

Not Supplemented

III. STANDARD PROVISIONS – MONITORING

A. Sampling and Analyses

This section is a supplement to III.A and III.B of Standard Provisions (Attachment D)

1. Use of Certified Laboratories

Water and waste analyses shall be performed by a laboratory certified for these analyses in accordance with California Water Code Section 13176.

2. Use of Appropriate Minimum Levels

Table C lists the suggested analytical methods for the 126 priority pollutants and other toxic pollutants that should be used, unless a particular method or minimum level (ML) is required in the MRP.

For priority pollutant monitoring, when there is more than one ML value for a given substance, the Discharger may select any one of the analytical methods cited in Table C for compliance determination, or any other method described in 40 CFR part 136 or approved by USEPA (such as the 1600 series) if authorized by the Regional Water Board. However, the ML must be below the effluent limitation and water quality objective. If no ML value is below the effluent limitation and water quality objective, then the method must achieve an ML no greater than the lowest ML value indicated in Table C. All monitoring instruments and equipment shall be properly calibrated and maintained to ensure accuracy of measurements.

3. Frequency of Monitoring

The minimum schedule of sampling analysis is specified in the MRP portion of the permit.

a. Timing of Sample Collection

(1) The Discharger shall collect samples of influent on varying days selected at random and shall not include any plant recirculation or other sidestream wastes, unless otherwise stipulated by the MRP.

(2) The Discharger shall collect samples of effluent on days coincident with influent sampling unless otherwise stipulated by the MRP or the Executive Officer. The Executive Officer may approve an alternative sampling plan if it is demonstrated to be representative of plant discharge flow and in compliance with all other permit requirements.

(3) The Discharger shall collect grab samples of effluent during periods of day-time maximum peak effluent flows (or peak flows through secondary treatment units for facilities that recycle effluent flows).

(4) Effluent sampling for conventional pollutants shall occur on at least one day of any multiple-day bioassay test the MRP requires. During the course of the test, on at least one day, the Discharger shall collect and retain samples of the discharge. In the event a bioassay test does not comply with permit limits, the Discharger shall analyze these retained samples for pollutants that could be toxic to aquatic life and for which it has effluent limits.

(a). The Discharger shall perform bioassay tests on final effluent samples; when chlorine is used for disinfection, bioassay tests shall be performed on effluent after chlorination-dechlorination; and

(b) The Discharger shall analyze for total ammonia nitrogen and calculate the amount of un-ionized ammonia whenever test results fail to meet the percent survival specified in the permit.

b. Conditions Triggering Accelerated Monitoring

(1) If the results from two consecutive samples of a constituent monitored in a 30-day period exceed the monthly average limit for any parameter (or if the required sampling frequency is once per month and the monthly sample exceeds the monthly average limit), the Discharger shall, within 24 hours after the results are received, increase its sampling frequency to daily until the results from the additional sampling show that the parameter is in compliance with the monthly average limit.

(2) If any maximum daily limit is exceeded, the Discharger shall increase its sampling frequency to daily within 24 hours after the results are received that indicate the exceedance of the maximum daily limit until two samples collected on consecutive days show compliance with the maximum daily limit.

(3) If final or intermediate results of an acute bioassay test indicate a violation or threatened violation (e.g., the percentage of surviving test organisms of any single acute bioassay test is less than 70 percent), the Discharger shall initiate a new test as soon as practical, and the Discharger shall investigate the cause of the mortalities and report its findings in the next self monitoring report (SMR).

(4) The Discharger shall calibrate chlorine residual analyzers against grab samples as frequently as necessary to maintain accurate control and reliable operation. If an effluent violation is detected, the Discharger shall collect grab samples at least every 30 minutes until compliance with the limit is achieved, unless the Discharger monitors chlorine residual continuously. In such cases, the Discharger shall continue to conduct continuous monitoring as required by its permit.

(5) When a bypass occurs (except one subject to provision III.A.3.b.6 below), the Discharger shall monitor flows and collect samples on a daily basis for all constituents at affected discharge points that have effluent limits for the duration of the bypass (including acute toxicity using static renewals), except chronic toxicity, unless otherwise stipulated by the MRP.

(6) Unless otherwise stipulated by the MRP, when a bypass approved pursuant to Attachment D, Standard Provisions, Sections I.G.2 or I.G.4, occurs, the Discharger shall monitor flows and, using appropriate procedures as specified in the MRP, collect and retain samples for affected discharge points on a daily basis for the duration of the bypass. The Discharger shall analyze for total suspended solids (TSS) using 24-hour composites (or more frequent increments) and for bacteria indicators with effluent limits using grab samples. If TSS exceeds 45 mg/L in any composite sample, the Discharger shall also analyze the retained samples for that discharge for all other constituents that have effluent limits, except oil and grease, mercury, dioxin-TEQ, and acute and chronic toxicity. Additionally, at least once each year, the Discharger shall analyze the retained samples for one approved bypass discharge event for all other constituents that have effluent limits, except oil and grease, mercury, dioxin-TEQ, and acute and chronic toxicity. This monitoring shall be in addition to the minimum monitoring specified in the MRP.

c. Stormwater Monitoring

The requirements of this section only apply to facilities that are not covered by an NPDES permit for stormwater discharges and where not all site storm drainage from process areas (i.e., areas of the treatment facility where chemicals or wastewater could come in contact with stormwater) is directed to the headworks. For stormwater not directed to the headworks during the wet season (October 1 to April 30), the Discharger shall:

(1) Conduct visual observations of the stormwater discharge locations during daylight hours at least once per month during a storm event that produces significant stormwater discharge to observe the presence of floating and suspended materials, oil and grease, discoloration, turbidity, and odor, etc.

(2) Measure (or estimate) the total volume of stormwater discharge, collect grab samples of stormwater discharge from at least two storm events that produce significant stormwater discharge, and analyze the samples for oil and grease, pH, TSS, and specific conductance.

The grab samples shall be taken during the first 30 minutes of the discharge. If collection of the grab samples during the first 30 minutes is impracticable, grab samples may be taken during the first hour of the discharge, and the Discharger shall explain in the Annual Report why the grab sample(s) could not be taken in the first 30 minutes.

(3) Testing for the presence of non-stormwater discharges shall be conducted no less than twice during the dry season (May 1 to September 30) at all stormwater discharge locations. Tests may include visual observations of flows, stains, sludges, odors, and other abnormal conditions; dye tests; TV line surveys; or analysis and validation of accurate piping schematics. Records shall be maintained describing the method used, date of testing, locations observed, and test results.

(4) Samples shall be collected from all locations where stormwater is discharged. Samples shall represent the quality and quantity of stormwater discharged from the facility. If a facility discharges stormwater at multiple locations, the Discharger may sample a reduced number of locations if it establishes and documents through the monitoring program that stormwater discharges from different locations are substantially identical.

(5) Records of all stormwater monitoring information and copies of all reports required by the permit shall be retained for a period of at least three years from the date of sample, observation, or report.

d. Receiving Water Monitoring

The requirements of this section only apply when the MRP requires receiving water sampling.

(1) Receiving water samples shall be collected on days coincident with effluent sampling for conventional pollutants.

(2) Receiving water samples shall be collected at each station on each sampling day during the period within one hour following low slack water. Where sampling during lower slack water is impractical, sampling shall be performed during higher slack water. Samples shall be collected within the discharge plume and down current of the discharge point so as to be representative, unless otherwise stipulated in the MRP.

(3) Samples shall be collected within one foot of the surface of the receiving water, unless otherwise stipulated in the MRP.

B. Biosolids Monitoring

This section supplements III.B of Standard Provisions (Attachment D)

When biosolids are sent to a landfill, sent to a surface disposal site, or applied to land as a soil amendment, they must be monitored as follows:

1. Biosolids Monitoring Frequency

Biosolids disposal must be monitored at the following frequency:

Metric tons biosolids/365 days	Frequency
0-290	Once per year
290-1500	Quarterly
1500-15,000	Six times per year
Over 15,000	Once per month
(Metric tons are on a dry weight basis)	

2. Biosolids Pollutants to Monitor

Biosolids shall be monitored for the following constituents:

Land Application: arsenic, cadmium, copper, mercury, molybdenum, nickel, lead, selenium, and zinc

Municipal Landfill: Paint filter test (pursuant to 40 CFR 258)

Biosolids-only Landfill or Surface Disposal Site (if no liner and leachate system): arsenic, chromium, and nickel

C. Standard Observations

This section is an addition to III of Standard Provisions (Attachment D)

1. Receiving Water Observations

The requirements of this section only apply when the MRP requires standard observations of the receiving water. Standard observations shall include the following:

a. *Floating and suspended materials* (e.g., oil, grease, algae, and other macroscopic particulate matter): presence or absence, source, and size of affected area.

b. *Discoloration and turbidity*: description of color, source, and size of affected area.

c. *Odor*: presence or absence, characterization, source, distance of travel, and wind direction.

d. *Beneficial water use*: presence of water-associated waterfowl or wildlife, fisherpeople, and other recreational activities in the vicinity of each sampling station.

e. *Hydrographic condition*: time and height of corrected high and low tides (corrected to nearest National Oceanic and Atmospheric Administration location for the sampling date and time of sample collection).

f. *Weather conditions*:

(1) Air temperature; and

(2) Total precipitation during the five days prior to observation.

2. Wastewater Effluent Observations

The requirements of this section only apply when the MRP requires wastewater effluent standard observations. Standard observations shall include the following:

a. *Floating and suspended material of wastewater origin* (e.g., oil, grease, algae, and other macroscopic particulate matter): presence or absence.

b. *Odor*: presence or absence, characterization, source, distance of travel, and wind direction.

3. Beach and Shoreline Observations

The requirements of this section only apply when the MRP requires beach and shoreline standard observations. Standard observations shall include the following:

a. *Material of wastewater origin*: presence or absence, description of material, estimated size of affected area, and source.

b. *Beneficial use*: estimate number of people participating in recreational water contact, non-water contact, or fishing activities.

4. Land Retention or Disposal Area Observations

The requirements of this section only apply to facilities with on-site surface impoundments or disposal areas that are in use. This section applies to both liquid and solid wastes, whether confined or unconfined. The Discharger shall conduct the following for each impoundment:

a. Determine the amount of freeboard at the lowest point of dikes confining liquid wastes.

b. Report evidence of leaching liquid from area of confinement and estimated size of affected area. Show affected area on a sketch and volume of flow (e.g., gallons per minute [gpm]).

c. Regarding odor, describe presence or absence, characterization, source, distance of travel, and wind direction.

d. Estimate number of waterfowl and other water-associated birds in the disposal area and vicinity.

5. Periphery of Waste Treatment and/or Disposal Facilities Observations

The requirements of this section only apply when the MRP specifies periphery standard observations. Standard observations shall include the following:

a. *Odor*: presence or absence, characterization, source, and distance of travel.

b. *Weather conditions*: wind direction and estimated velocity.

IV. STANDARD PROVISIONS – RECORDS

A. Records to be Maintained

This supplements IV.A of Standard Provisions (Attachment D)

The Discharger shall maintain records in a manner and at a location (e.g., wastewater treatment plant or Discharger offices) such that the records are accessible to Regional Water Board staff. The minimum period of retention specified in Section IV, Records, of the Federal Standard Provisions shall be extended during the course of any unresolved litigation regarding the subject discharge, or when requested by the Regional Water Board or Regional Administrator of USEPA, Region IX.

A copy of the permit shall be maintained at the discharge facility and be available at all times to operating personnel.

B. Records of monitoring information shall include

This supplements IV.B of Standard Provision (Attachment D)

1. Analytical Information

Records shall include analytical method detection limits, minimum levels, reporting levels, and related quantification parameters.

2. Flow Monitoring Data

For all required flow monitoring (e.g., influent and effluent flows), the additional records shall include the following, unless otherwise stipulated by the MRP:

a. Total volume for each day; and

b. Maximum, minimum, and average daily flows for each calendar month.

3. Wastewater Treatment Process Solids

a. For each treatment unit process that involves solids removal from the wastewater stream, records shall include the following:

(1) Total volume or mass of solids removed from each collection unit (e.g., grit, skimmings, undigested biosolids, or combination) for each calendar month or other time period as appropriate, but not to exceed annually; and

(2) Final disposition of such solids (e.g., landfill, other subsequent treatment unit).

b. For final dewatered biosolids from the treatment plant as a whole, records shall include the following:

(1) Total volume or mass of dewatered biosolids for each calendar month;

(2) Solids content of the dewatered biosolids; and

(3) Final disposition of dewatered biosolids (disposal location and disposal method).

4. Disinfection Process

For the disinfection process, these additional records shall be maintained documenting process operation and performance:

a. For bacteriological analyses:

(1) Wastewater flow rate at the time of sample collection; and

(2) Required statistical parameters for cumulative bacterial values (e.g., moving median or geometric mean for the number of samples or sampling period identified in this Order).

b. For the chlorination process, when chlorine is used for disinfection, at least daily average values for the following:

(1) Chlorine residual of treated wastewater as it enters the contact basin (mg/L);

(2) Chlorine dosage (kg/day); and

(3) Dechlorination chemical dosage (kg/day).

5. Treatment Process Bypasses

A chronological log of all treatment process bypasses, including wet weather blending, shall include the following:

a. Identification of the treatment process bypassed;

b. Dates and times of bypass beginning and end;

c. Total bypass duration;

d. Estimated total bypass volume; and

e. Description of, or reference to other reports describing, the bypass event, the cause, the corrective actions taken (except for wet weather blending that is in compliance with permit conditions), and any additional monitoring conducted.

6. Treatment Facility Overflows

This section applies to records for overflows at the treatment facility. This includes the headworks and all units and appurtenances downstream. The Discharger shall retain a chronological log of overflows at the treatment facility and records supporting the information provided in section V.E.2.

C. Claims of Confidentiality – Not Supplemented

V. STANDARD PROVISIONS – REPORTING

A. Duty to Provide Information

Not Supplemented

B. Signatory and Certification Requirements

Not Supplemented

C. Monitoring Reports

This section supplements V.C of Standard Provisions (Attachment D)

1. Self Monitoring Reports

For each reporting period established in the MRP, the Discharger shall submit an SMR to the Regional Water Board in accordance with the requirements listed in this document and at the frequency the MRP specifies. The purpose of the SMR is to document treatment performance, effluent quality, and compliance with the waste discharge requirements of this Order.

a. Transmittal letter

Each SMR shall be submitted with a transmittal letter. This letter shall include the following:

(1) Identification of all violations of effluent limits or other waste discharge requirements found during the reporting period;

(2) Details regarding violations: parameters, magnitude, test results, frequency, and dates;

(3) Causes of violations;

(4) Discussion of corrective actions taken or planned to resolve violations and prevent recurrences, and dates or time schedule of action implementation (if previous reports have been submitted that address corrective actions, reference to the earlier reports is satisfactory);

(5) Data invalidation (Data should not be submitted in an SMR if it does not meet quality assurance/quality control standards. However, if the Discharger wishes to invalidate any measurement after it was submitted in an SMR, a letter shall identify the measurement suspected to be invalid and state the Discharger's intent to submit, within 60 days, a formal request to invalidate the measurement. This request shall include the original measurement in question, the reason for invalidating the measurement, all relevant documentation that supports invalidation [e.g., laboratory sheet, log entry, test results, etc.], and discussion of the corrective actions taken or planned [with a time schedule for completion] to prevent recurrence of the sampling or measurement problem.);

(6) If the Discharger blends, the letter shall describe the duration of blending events and certify whether blended effluent was in compliance with the conditions for blending; and

(7) Signature (The transmittal letter shall be signed according to Section V.B of this Order, Attachment D – Standard Provisions.).

b. Compliance evaluation summary

Each report shall include a compliance evaluation summary. This summary shall include each parameter for which the permit specifies effluent limits, the number of samples taken during the monitoring period, and the number of samples that exceed applicable effluent limits.

c. Results of analyses and observations

(1) Tabulations of all required analyses and observations, including parameter, date, time, sample station, type of sample, test result, method detection limit, method minimum level, and method reporting level, if applicable, signed by the laboratory director or other responsible official.

(2) When determining compliance with an average monthly effluent limitation and more than one sample result is available in a month, the Discharger shall compute the arithmetic mean unless the data set contains one or more reported determinations of detected but not quantified (DNQ) or nondetect (ND). In those cases, the Discharger shall compute the median in place of the arithmetic mean in accordance with the following procedure:

(a) The data set shall be ranked from low to high, reported ND determinations lowest, DNQ determinations next, followed by quantified values (if any). The order of the individual ND or DNQ determinations is unimportant.

(b) The median value of the data set shall be determined. If the data set has an odd number of data points, then the median is the middle value. If the data set has an even number of data points, then the median is the average of the two values around the middle unless one or both of the points are ND or DNQ, in which case the median value shall be the lower of the two data points where DNQ is lower than a value and ND is lower than DNQ.

If a sample result, or the arithmetic mean or median of multiple sample results, is below the reporting limit, and there is evidence that the priority pollutant is present in the effluent above an effluent limitation and the Discharger conducts a Pollutant Minimization Program, the Discharger shall not be deemed out of compliance.

(3) Dioxin-TEQ Reporting: The Discharger shall report for each dioxin and furan congener the analytical results of effluent monitoring, including the quantifiable limit (reporting level), the method detection limit, and the measured concentration. The Discharger shall report all measured values of individual congeners, including data qualifiers. When calculating dioxin-TEQ, the Discharger shall set congener concentrations below the minimum levels (ML) to zero. The Discharger shall calculate and report dioxin-TEQs using the following formula, where the MLs, toxicity equivalency factors (TEFs), and bioaccumulation equivalency factors (BEFs) are as provided in Table A:

$$\text{Dioxin-TEQ} = \Sigma\,(C_x \text{ x } TEF_x \text{ x } BEF_x)$$

where: C_x = measured or estimated concentration of congener *x*
TEF_x = toxicity equivalency factor for congener x
BEFx = bioaccumulation equivalency factor for congener *x*

Table A

Minimum Levels, Toxicity Equivalency Factors,
and Bioaccumulation Equivalency Factors

Dioxin or Furan Congener	Minimum Level (pg/L)	1998 Toxicity Equivalency Factor (TEF)	Bioaccumulation Equivalency Factor (BEF)
2,3,7,8-TCDD	10	1.0	1.0
1,2,3,7,8-PeCDD	50	1.0	0.9
1,2,3,4,7,8-HxCDD	50	0.1	0.3
1,2,3,6,7,8-HxCDD	50	0.1	0.1
1,2,3,7,8,9-HxCDD	50	0.1	0.1
1,2,3,4,6,7,8-HpCDD	50	0.01	0.05
OCDD	100	0.0001	0.01
2,3,7,8-TCDF	10	0.1	0.8
1,2,3,7,8-PeCDF	50	0.05	0.2

2,3,4,7,8-PeCDF	50	0.5	1.6
1,2,3,4,7,8-HxCDF	50	0.1	0.08
1,2,3,6,7,8-HxCDF	50	0.1	0.2
1,2,3,7,8,9-HxCDF	50	0.1	0.6
2,3,4,6,7,8-HxCDF	50	0.1	0.7
1,2,3,4,6,7,8-HpCDF	50	0.01	0.01
1,2,3,4,7,8,9-HpCDF	50	0.01	0.4
OCDF	100	0.0001	0.02

d. Data reporting for results not yet available

The Discharger shall make all reasonable efforts to obtain analytical data for required parameter sampling in a timely manner. Certain analyses require additional time to complete analytical processes and report results. For cases where required monitoring parameters require additional time to complete analytical processes and reports, and results are not available in time to be included in the SMR for the subject monitoring period, the Discharger shall describe such circumstances in the SMR and include the data for these parameters and relevant discussions of any observed exceedances in the next SMR due after the results are available.

e. Flow data

The Discharger shall provide flow data tabulation pursuant to Section IV.B.2.

f. Annual self monitoring report requirements

By the date specified in the MRP, the Discharger shall submit an annual report to the Regional Water Board covering the previous calendar year. The report shall contain the following:

(1) Annual compliance summary table of treatment plant performance, including documentation of any blending events;

(2) Comprehensive discussion of treatment plant performance and compliance with the permit (This discussion shall include any corrective actions taken or planned, such as changes to facility equipment or operation practices that may be needed to achieve compliance, and any other actions taken or planned that are intended to improve performance and reliability of the Discharger's wastewater collection, treatment, or disposal practices.);

(3) Both tabular and graphical summaries of the monitoring data for the previous year if parameters are monitored at a frequency of monthly or greater;

(4) List of approved analyses, including the following:

(a) List of analyses for which the Discharger is certified;

(b) List of analyses performed for the Discharger by a separate certified laboratory (copies of reports signed by the laboratory director of that laboratory shall not be submitted but be retained onsite); and

(c) List of "waived" analyses, as approved;

(5) Plan view drawing or map showing the Discharger's facility, flow routing, and sampling and observation station locations;

(6) Results of annual facility inspection to verify that all elements of the SWPP Plan are accurate and up to date (only required if the Discharger does not route all stormwater to the headworks of its wastewater treatment plant); and

(7) Results of facility report reviews (The Discharger shall regularly review, revise, and update, as necessary, the O&M Manual, the Contingency Plan, the Spill Prevention Plan, and Wastewater Facilities Status Report so that these documents remain useful and relevant to current practices. At a minimum, reviews shall be conducted annually. The Discharger shall include, in each Annual Report, a description or summary of review and evaluation procedures, recommended or planned actions, and an estimated time schedule for implementing these actions. The Discharger shall complete changes to these documents to ensure they are up-to-date.).

g. Report submittal

The Discharger shall submit SMRs to:
California Regional Water Quality Control Board
San Francisco Bay Region
1515 Clay Street, Suite 1400
Oakland, CA 94612
Attn: NPDES Wastewater Division

h. Reporting data in electronic format

The Discharger has the option to submit all monitoring results in an electronic reporting format approved by the Executive Officer. If the Discharger chooses to submit SMRs electronically, the following shall apply:

(1) *Reporting Method*: The Discharger shall submit SMRs electronically via a process approved by the Executive Officer (see, for example, the letter dated December 17, 1999, "Official Implementation of Electronic Reporting System [ERS]" and the progress report letter dated December 17, 2000).

(2) *Monthly or Quarterly Reporting Requirements*: For each reporting period (monthly or quarterly as specified in the MRP), the Discharger shall submit an electronic SMR to the Regional Water Board in accordance with the provisions of Section V.C.1.a-e, except for requirements under Section V.C.1.c(1) where ERS does not have fields for dischargers to input certain information (e.g., sample time). However, until USEPA approves the electronic signature or other signature technologies, Dischargers that use ERS shall submit a hard copy of the original

transmittal letter, an ERS printout of the data sheet, and a violation report (a receipt of the electronic transmittal shall be retained by the Discharger). This electronic SMR submittal suffices for the signed tabulations specified under Section V.C.1.c(1).

(3) *Annual Reporting Requirements*: Dischargers who have submitted data using the ERS for at least one calendar year are exempt from submitting the portion of the annual report required under Section V.C.1.f(1) and (3).

D. Compliance Schedules

Not supplemented

E. Twenty-Four Hour Reporting

This section supplements V.E of Standard Provision (Attachment D)

1. Spill of Oil or Other Hazardous Material Reports

a. Within 24 hours of becoming aware of a spill of oil or other hazardous material that is not contained onsite and completely cleaned up, the Discharger shall report by telephone to the Regional Water Board at (510) 622-2369.

b. The Discharger shall also report such spills to the State Office of Emergency Services [telephone (800) 852-7550] only when the spills are in accordance with applicable reporting quantities for hazardous materials.

c. The Discharger shall submit a written report to the Regional Water Board within five working days following telephone notification unless directed otherwise by Regional Water Board staff. A report submitted electronically is acceptable. The written report shall include the following:

(1) Date and time of spill, and duration if known;

(2) Location of spill (street address or description of location);

(3) Nature of material spilled;

(4) Quantity of material involved;

(5) Receiving water body affected, if any;

(6) Cause of spill;

(7) Estimated size of affected area;

(8) Observed impacts to receiving waters (e.g., oil sheen, fish kill, water discoloration);

(9) Corrective actions taken to contain, minimize, or clean up the spill;

(10) Future corrective actions planned to be taken to prevent recurrence, and schedule of implementation; and

(11) Persons or agencies notified.

2. Unauthorized Discharges from Municipal Wastewater Treatment Plants[1]

The following requirements apply to municipal wastewater treatment plants that experience an unauthorized discharge at their treatment facilities and are consistent with and supercede requirements imposed on the Discharger by the Executive Officer by letter of May 1, 2008, issued pursuant to California Water Code Section 13383.

a. Two (2)-Hour Notification

For any unauthorized discharges that result in a discharge to a drainage channel or a surface water, the Discharger shall, as soon as possible, but not later than two (2) hours after becoming aware of the discharge, notify the State Office of Emergency Services (telephone 800-852-7550), the local health officers or directors of environmental health with jurisdiction over the affected water bodies, and the Regional Water Board. The notification to the Regional Water Board shall be via the Regional Water Board's online reporting system at www.wbers.net, and shall include the following:

(1) Incident description and cause;

(2) Location of threatened or involved waterway(s) or storm drains;

(3) Date and time the unauthorized discharge started;

(4) Estimated quantity and duration of the unauthorized discharge (to the extent known), and the estimated amount recovered;

(5) Level of treatment prior to discharge (e.g., raw wastewater, primary treated, undisinfected secondary treated, and so on); and

(6) Identity of the person reporting the unauthorized discharge.

b. 24-hour Certification

Within 24 hours, the Discharger shall certify to the Regional Water Board, at www.wbers.net, that the State Office of Emergency Services and the local health officers or directors of environmental health with jurisdiction over the affected water bodies have been notified of the unauthorized discharge.

c. 5-Day Written Report

Within five business days, the Discharger shall submit a written report, via the Regional Water Board's online reporting system at www.wbers.net, that includes, in addition to the information required above, the following:

[1] California Code of Regulations, Title 23, Section 2250(b), defines an unauthorized discharge to be a discharge, not regulated by waste discharge requirements, of treated, partially treated, or untreated wastewater resulting from the intentional or unintentional diversion of wastewater from a collection, treatment or disposal system.

(1) Methods used to delineate the geographical extent of the unauthorized discharge within receiving waters;

(2) Efforts implemented to minimize public exposure to the unauthorized discharge;

(3) Visual observations of the impacts (if any) noted in the receiving waters (e.g., fish kill, discoloration of water) and the extent of sampling if conducted;

(4) Corrective measures taken to minimize the impact of the unauthorized discharge;

(5) Measures to be taken to minimize the chances of a similar unauthorized discharge occurring in the future;

(6) Summary of Spill Prevention Plan or O&M Manual modifications to be made, if necessary, to minimize the chances of future unauthorized discharges; and

(7) Quantity and duration of the unauthorized discharge, and the amount recovered.

d. Communication Protocol

To clarify the multiple levels of notification, certification, and reporting, the current communication requirements for unauthorized discharges from municipal wastewater treatment plants are summarized in Table B that follows.

Table B

Summary of Communication Requirements for Unauthorized Discharges[1] from Municipal Wastewater Treatment Plants

Discharger is required to:	Agency Receiving Information	Time frame	Method for Contact
1. Notify	California Emergency Management Agency (Cal EMA)	As soon as possible, but not later than **2 hours** after becoming aware of the unauthorized discharge.	Telephone – (800) 852-7550 (obtain a control number from Cal EMA)
	Local health department	As soon as possible, but not later than **2 hours** after becoming aware of the unauthorized discharge.	Depends on local health department
	Regional Water Board	As soon as possible, but not later than **2 hours** after becoming aware of the unauthorized discharge.	Electronic[2] www.wbers.net
2. Certify	Regional Water Board	As soon as possible, but not later than	Electronic[3]

[1] California Code of Regulations, Title 23, Section 2250(b), defines an unauthorized discharge to be a discharge, not regulated by waste discharge requirements, of treated, partially treated, or untreated wastewater resulting from the intentional or unintentional diversion of wastewater from a collection, treatment or disposal system.

[2] In the event that the Discharger is unable to provide online notification within 2 hours of becoming aware of an unauthorized discharge, it shall phone the Regional Water Board's spill hotline at (510) 622-2369 and convey the same information contained in the notification form. In addition, within 3 business days of becoming aware of the unauthorized discharge, the Discharger shall enter the notification information into the Regional Water Board's online system in electronic format.

[3] In most instances, the 2-hour notification will also satisfy 24-hour certification requirements. This is because the notification form includes fields for documenting that OES and the local health department have been contacted. In other words, if the Discharger is able

		24 hours after becoming aware of the unauthorized discharge.	www.wbers.net
3. Report	Regional Water Board	Within **5 business days** of becoming aware of the unauthorized discharge.	Electronic[4] www.wbers.net

F. Planned Changes

Not supplemented

G. Anticipated Noncompliance

Not supplemented

H. Other Noncompliance

Not supplemented

I. Other Information

Not supplemented

VI. STANDARD PROVISIONS – ENFORCEMENT

Not Supplemented

VII. ADDITIONAL PROVISIONS – NOTIFICATION LEVELS

Not Supplemented

VIII. DEFINITIONS

This section is an addition to Standard Provisions (Attachment D)

More definitions can be found in Attachment A of this NPDES Permit.

1. Arithmetic Calculations

   a. Geometric mean is the antilog of the log mean or the back-transformed mean of the logarithmically transformed variables, which is equivalent to the multiplication of the antilogarithms. The geometric mean can be calculated with either of the following equations:

to complete all the fields in the notification form within 2 hours, certification requirements are also satisfied. In the event that the Discharger is unable to provide online certification within 24 hours of becoming aware of an unauthorized discharge, it shall phone the Regional Water Board's spill hotline at (510) 622-2369 and convey the same information contained in the certification form. In addition, within 3 business days of becoming aware of the unauthorized discharge, the Discharger shall enter the certification information into the Regional Water Board's online system in electronic format.

[4] If the Discharger cannot satisfy the 5-day reporting requirements via the Regional Water Board's online reporting system, it shall submit a written report (preferably electronically in pdf) to the appropriate Regional Water Board case manager. In cases where the Discharger cannot satisfy the 5-day reporting requirements via the online reporting system, it must still complete the Regional Water Board's online reporting requirements within 15 calendar days of becoming aware of the unauthorized discharge.

$$\text{Geometric Mean} = Anti\log\left(\frac{1}{N}\sum_{i=1}^{N} Log(C_i)\right)$$

or

$$\text{Geometric Mean} = (C_1 * C_2 * \ldots * C_N)^{1/N}$$

Where "N" is the number of data points for the period analyzed and "C" is the concentration for each of the "N" data points.

b. Mass emission rate is obtained from the following calculation for any calendar day:

$$\text{Mass emission rate (lb/day)} = \frac{8.345}{N}\sum_{i=1}^{N} Q_i C_i$$

$$\text{Mass emission rate (kg/day)} = \frac{3.785}{N}\sum_{i=1}^{N} Q_i C_i$$

In which "N" is the number of samples analyzed in any calendar day and "Q_i" and "C_i" are the flow rate (MGD) and the constituent concentration (mg/L) associated with each of the "N" grab samples that may be taken in any calendar day. If a composite sample is taken, "C_i" is the concentration measured in the composite sample and "Q_i" is the average flow rate occurring during the period over which the samples are composited. The daily concentration of a constituent measured over any calendar day shall be determined from the flow-weighted average of the same constituent in the combined waste streams as follows:

$$C_d = \text{Average daily concentration} = \frac{1}{Q_t}\sum_{i=1}^{N} Q_i C_i$$

In which "N" is the number of component waste streams and "Q" and "C" are the flow rate (MGD) and the constituent concentration (mg/L) associated with each of the "N" waste streams. "Q_t" is the total flow rate of the combined waste streams.

c. Maximum allowable mass emission rate, whether for a 24-hour, weekly 7-day, monthly 30-day, or 6-month period, is a limitation expressed as a daily rate determined with the formulas in the paragraph above, using the effluent concentration limit specified in the permit for the period and the specified allowable flow.

d. POTW removal efficiency is the ratio of pollutants removed by the treatment facilities to pollutants entering the treatment facilities (expressed as a percentage). The Discharger shall determine removal efficiencies using monthly averages (by calendar month unless otherwise specified) of pollutant concentration of influent and effluent samples collected at about the same time and using the following equation (or its equivalent):

Removal Efficiency (%) = 100 × [1-(Effluent Concentration/Influent Concentration)]

2. Biosolids means the solids, semi-liquid suspensions of solids, residues, screenings, grit, scum, and precipitates separated from or created in wastewater by the unit processes of a treatment system. It

also includes, but is not limited to, all supernatant, filtrate, centrate, decantate, and thickener overflow and underflow in the solids handling parts of the wastewater treatment system.

3. Blending is the practice of recombining wastewater that has been biologically treated with wastewater that has bypassed around biological treatment units.

4. Bottom sediment sample is (1) a separate grab sample taken at each sampling station for the determination of selected physical-chemical parameters, or (2) four grab samples collected from different locations in the immediate vicinity of a sampling station while the boat is anchored and analyzed separately for macroinvertebrates.

5. Composite sample is a sample composed of individual grab samples collected manually or by an automatic sampling device on the basis of time or flow as specified in the MRP. For flow-based composites, the proportion of each grab sample included in the composite sample shall be within plus or minus five percent (+/-5%) of the representative flow rate of the waste stream being measured at the time of grab sample collection. Alternatively, equal volume grab samples may be individually analyzed with the flow-weighted average calculated by averaging flow-weighted ratios of each grab sample analytical result. Grab samples comprising time-based composite samples shall be collected at intervals not greater than those specified in the MRP. The quantity of each grab sample comprising a time-based composite sample shall be a set of flow proportional volumes as specified in the MRP. If a particular time-based or flow-based composite sampling protocol is not specified in the MRP, the Discharger shall determine and implement the most representative sampling protocol for the given parameter subject to Executive Officer approval.

6. Depth-integrated sample is defined as a water or waste sample collected by allowing a sampling device to fill during a vertical traverse in the waste or receiving water body being sampled. The Discharger shall collect depth-integrated samples in such a manner that the collected sample will be representative of the waste or water body at that sampling point.

7. Flow sample is an accurate measurement of the average daily flow volume using a properly calibrated and maintained flow measuring device.

8. Grab sample is an individual sample collected in a short period of time not exceeding 15 minutes. Grab samples represent only the condition that exists at the time the wastewater is collected.

9. Initial dilution is the process that results in the rapid and irreversible turbulent mixing of wastewater with receiving water around the point of discharge.

10. Overflow is the intentional or unintentional spilling or forcing out of untreated or partially treated wastes from a transport system (e.g., through manholes, at pump stations, and at collection points) upstream from the treatment plant headworks or from any part of a treatment plant facility.

11. Priority pollutants are those constituents referred to in 40 CFR Part 122 as promulgated in the Federal Register, Vol. 65, No. 97, Thursday, May 18, 2000, also known as the California Toxics Rule, the presence or discharge of which could reasonably be expected to interfere with maintaining designated uses.

12. Stormwater means stormwater runoff, snow melt runoff, and surface runoff and drainage. It excludes infiltration and runoff from agricultural land.

13. Toxic pollutant means any pollutant listed as toxic under federal Clean Water Act section 307(a)(1) or under 40 CFR 401.15.

14. Untreated waste is raw wastewater.

15, Waste, waste discharge, discharge of waste, and discharge are used interchangeably in the permit. The requirements of the permit apply to the entire volume of water, and the material therein, that is disposed of to surface and ground waters of the State of California.

Table C

List of Monitoring Parameters and Analytical Methods

CTR No.	Pollutant/Parameter	Analytical Method[5]	Minimum Levels[6] (µg/l)											
			GC	GCMS	LC	Color	FAA	GFAA	ICP	ICP MS	SPGFAA	HYD RIDE	CVAA	DCP
1.	Antimony	204.2					10	5	50	0.5	5	0.5		1000
2.	Arsenic	206.3				20		2	10	2	2	1		1000
3.	Beryllium						20	0.5	2	0.5	1			1000
4.	Cadmium	200 or 213					10	0.5	10	0.25	0.5			1000
5a.	Chromium (III)	SM 3500												
5b.	Chromium (VI)	SM 3500				10	5							1000
	Chromium (total)[7]	SM 3500					50	2	10	0.5	1			1000
6.	Copper	200.9					25	5	10	0.5	2			1000
7.	Lead	200.9					20	5	5	0.5	2			10,000
8.	Mercury	1631 (note)[8]												
9.	Nickel	249.2					50	5	20	1	5			1000
10.	Selenium	200.8 or SM 3114B or C						5	10	2	5	1		1000
11.	Silver	272.2					10	1	10	0.25	2			1000
12.	Thallium	279.2					10	2	10	1	5			1000
13.	Zinc	200 or 289					20		20	1	10			
14.	Cyanide	SM 4500 CN^- C or I				5								
15.	Asbestos (only required for dischargers to MUN waters)[9]	0100.2 [10]												

[5] The suggested method is the USEPA Method unless otherwise specified (SM = Standard Methods). The Discharger may use another USEPA-approved or recognized method if that method has a level of quantification below the applicable water quality objective. Where no method is suggested, the Discharger has the discretion to use any standard method.

[6] Minimum levels are from the *State Implementation Policy*. They are the concentration of the lowest calibration standard for that technique based on a survey of contract laboratories. Laboratory techniques are defined as follows: GC = Gas Chromatography; GCMS = Gas Chromatography/Mass Spectrometry; LC = High Pressure Liquid Chromatography; Color = Colorimetric; FAA = Flame Atomic Absorption; GFAA = Graphite Furnace Atomic Absorption; ICP = Inductively Coupled Plasma; ICPMS = Inductively Coupled Plasma/Mass Spectrometry; SPGFAA = Stabilized Platform Graphite Furnace Atomic Absorption (i.e., USEPA 200.9); Hydride = Gaseous Hydride Atomic Absorption; CVAA = Cold Vapor Atomic Absorption; DCP = Direct Current Plasma.

[7] Analysis for total chromium may be substituted for analysis of chromium (III) and chromium (VI) if the concentration measured is below the lowest hexavalent chromium criterion (11 ug/l).

[8] The Discharger shall use ultra-clean sampling (USEPA Method 1669) and ultra-clean analytical methods (USEPA Method 1631) for mercury monitoring. The minimum level for mercury is 2 ng/l (or 0.002 ug/l).

[9] MUN = Municipal and Domestic Supply. This designation, if applicable, is in the Findings of the permit.

CTR No.	Pollutant/Parameter	Analytical Method[5]	Minimum Levels[6] (µg/l)											
			GC	GCMS	LC	Color	FAA	GFAA	ICP	ICP MS	SPGFAA	HYD RIDE	CVAA	DCP
16.	2,3,7,8-TCDD and 17 congeners (Dioxin)	1613												
17.	Acrolein	603	2.0	5										
18.	Acrylonitrile	603	2.0	2										
19.	Benzene	602	0.5	2										
33.	Ethylbenzene	602	0.5	2										
39.	Toluene	602	0.5	2										
20.	Bromoform	601	0.5	2										
21.	Carbon Tetrachloride	601	0.5	2										
22.	Chlorobenzene	601	0.5	2										
23.	Chlorodibromomethane	601	0.5	2										
24.	Chloroethane	601	0.5	2										
25.	2-Chloroethylvinyl Ether	601	1	1										
26.	Chloroform	601	0.5	2										
75.	1,2-Dichlorobenzene	601	0.5	2										
76.	1,3-Dichlorobenzene	601	0.5	2										
77.	1,4-Dichlorobenzene	601	0.5	2										
27.	Dichlorobromomethane	601	0.5	2										
28.	1,1-Dichloroethane	601	0.5	1										
29.	1,2-Dichloroethane	601	0.5	2										
30.	1,1-Dichloroethylene or 1,1-Dichloroethene	601	0.5	2										
31.	1,2-Dichloropropane	601	0.5	1										
32.	1,3-Dichloropropylene or 1,3-Dichloropropene	601	0.5	2										
34.	Methyl Bromide or Bromomethane	601	1.0	2										
35.	Methyl Chloride or Chloromethane	601	0.5	2										
36.	Methylene Chloride or Dichlorormethane	601	0.5	2										
37.	1,1,2,2-Tetrachloroethane	601	0.5	1										
38.	Tetrachloroethylene	601	0.5	2										
40.	1,2-Trans-Dichloroethylene	601	0.5	1										
41.	1,1,1-Trichloroethane	601	0.5	2										
42.	1,1,2-Trichloroethane	601	0.5	2										
43.	Trichloroethene	601	0.5	2										
44.	Vinyl Chloride	601	0.5	2										
45.	2-Chlorophenol	604	2	5										
46.	2,4-Dichlorophenol	604	1	5										
47.	2,4-Dimethylphenol	604	1	2										
48.	2-Methyl-4,6-Dinitrophenol or Dinitro-2-methylphenol	604	10	5										
49.	2,4-Dinitrophenol	604	5	5										
50.	2-Nitrophenol	604		10										

[10] Determination of Asbestos Structures over 10 [micrometers] in Length in Drinking Water Using MCE Filters, USEPA 600/R-94-134, June 1994.

CTR No.	Pollutant/Parameter	Analytical Method[5]	Minimum Levels[6] (µg/l)											
			GC	GCMS	LC	Color	FAA	GFAA	ICP	ICP MS	SPGFAA	HYD RIDE	CVAA	DCP
51.	4-Nitrophenol	604	5	10										
52.	3-Methyl-4-Chlorophenol	604	5	1										
53.	Pentachlorophenol	604	1	5										
54.	Phenol	604	1	1		50								
55.	2,4,6-Trichlorophenol	604	10	10										
56.	Acenaphthene	610 HPLC	1	1	0.5									
57.	Acenaphthylene	610 HPLC		10	0.2									
58.	Anthracene	610 HPLC		10	2									
60.	Benzo(a)Anthracene or 1,2 Benzanthracene	610 HPLC	10	5										
61.	Benzo(a)Pyrene	610 HPLC		10	2									
62.	Benzo(b)Fluoranthene or 3,4 Benzofluoranthene	610 HPLC		10	10									
63.	Benzo(ghi)Perylene	610 HPLC		5	0.1									
64.	Benzo(k)Fluoranthene	610 HPLC		10	2									
74.	Dibenzo(a,h)Anthracene	610 HPLC		10	0.1									
86.	Fluoranthene	610 HPLC	10	1	0.05									
87.	Fluorene	610 HPLC		10	0.1									
92.	Indeno(1,2,3-cd) Pyrene	610 HPLC		10	0.05									
100.	Pyrene	610 HPLC		10	0.05									
68.	Bis(2-Ethylhexyl)Phthalate	606 or 625	10	5										
70.	Butylbenzyl Phthalate	606 or 625	10	10										
79.	Diethyl Phthalate	606 or 625	10	2										
80.	Dimethyl Phthalate	606 or 625	10	2										
81.	Di-n-Butyl Phthalate	606 or 625		10										
84.	Di-n-Octyl Phthalate	606 or 625		10										
59.	Benzidine	625		5										
65.	Bis(2-Chloroethoxy)Methane	625		5										
66.	Bis(2-Chloroethyl)Ether	625	10	1										
67.	Bis(2-Chloroisopropyl)Ether	625	10	2										
69.	4-Bromophenyl Phenyl Ether	625	10	5										
71.	2-Chloronaphthalene	625		10										
72.	4-Chlorophenyl Phenyl Ether	625		5										
73.	Chrysene	625		10	5									
78.	3,3'-Dichlorobenzidine	625		5										
82.	2,4-Dinitrotoluene	625	10	5										
83.	2,6-Dinitrotoluene	625		5										
85.	1,2-Diphenylhydrazine (note)[11]	625		1										
88.	Hexachlorobenzene	625	5	1										
89.	Hexachlorobutadiene	625	5	1										
90.	Hexachlorocyclopentadiene	625	5	5										
91.	Hexachloroethane	625	5	1										
93.	Isophorone	625	10	1										
94.	Naphthalene	625	10	1	0.2									

[11] Measurement for 1,2-Diphenylhydrazine may use azobenzene as a screen: if azobenzene is measured at >1 ug/l, then the Discharger shall analyze for 1,2-Diphenylhydrazine.

CTR No.	Pollutant/Parameter	Analytical Method[5]	Minimum Levels[6] (µg/l)											
			GC	GCMS	LC	Color	FAA	GFAA	ICP	ICP MS	SPGFAA	HYD RIDE	CVAA	DCP
95.	Nitrobenzene	625	10	1										
96.	N-Nitrosodimethylamine	625	10	5										
97.	N-Nitrosodi-n-Propylamine	625	10	5										
98.	N-Nitrosodiphenylamine	625	10	1										
99.	Phenanthrene	625		5	0.05									
101.	1,2,4-Trichlorobenzene	625	1	5										
102.	Aldrin	608	0.005											
103.	α-BHC	608	0.01											
104.	β-BHC	608	0.005											
105.	γ-BHC (Lindane)	608	0.02											
106.	δ-BHC	608	0.005											
107.	Chlordane	608	0.1											
108.	4,4'-DDT	608	0.01											
109.	4,4'-DDE	608	0.05											
110.	4,4'-DDD	608	0.05											
111.	Dieldrin	608	0.01											
112.	Endosulfan (alpha)	608	0.02											
113.	Endosulfan (beta)	608	0.01											
114.	Endosulfan Sulfate	608	0.05											
115.	Endrin	608	0.01											
116.	Endrin Aldehyde	608	0.01											
117.	Heptachlor	608	0.01											
118.	Heptachlor Epoxide	608	0.01											
119-125	PCBs: Aroclors 1016, 1221, 1232, 1242, 1248, 1254, 1260	608	0.5											
126.	Toxaphene	608	0.5											