CALIFORNIA REGIONAL WATER QUALITY CONTROL BOARD
CENTRAL VALLEY REGION

11020 Sun Center Drive, #200 Rancho Cordova, California 95670-6114
Phone (916) 464-3291 • Fax (916) 464-4645
http://www.waterboards.ca.gov/centralvalley

ORDER R5-2014-0104-01
NPDES NO. CA0079464

WASTE DISCHARGE REQUIREMENTS FOR THE SAN ANDREAS SANITARY DISTRICT WASTEWATER TREATMENT PLANT CALAVERAS COUNTY

The following Discharger is subject to waste discharge requirements (WDR's) set forth in this Order:

Table 1. Discharger Information

Discharger	**San Andreas Sanitary District**
Name of Facility	**Wastewater Treatment Plant**
Facility Address	**675 Gold Oak Road**
	San Andreas, Ca 95249
	Calaveras County

Table 2. Discharge Location

Discharge Point	Effluent Description	Discharge Point Latitude (North)	Discharge Point Longitude (West)	Receiving Water
001	**Treated municipal wastewater**	**38º 12' 39" N**	**120º 42' 20" W**	**North Fork Calaveras River**

Table 3. Administrative Information

This Order was adopted on:	**8 August 2014**
This Order shall become effective on:	**1 October 2014**
This Order shall expire on:	**30 September 2019**
The Discharger shall file a Report of Waste Discharge as an application for reissuance of WDR's in accordance with title 23, California Code of Regulations, and an application for reissuance of a National Pollutant Discharge Elimination System (NPDES) permit no later than:	**180 days prior to the Order expiration date**
The U.S. Environmental Protection Agency (U.S. EPA) and the California Regional Water Quality Control Board, Central Valley Region have classified this discharge as follows:	**Minor**

I, Pamela C. Creedon, Executive Officer, do hereby certify that this Order with all attachments is a full, true, and correct copy of the Order adopted by the California Regional Water Quality Control Board, Central Valley Region, on **8 August 2014**, and amended by Order R5-2016-0067 on **19 August 2016.**

ORIGINAL SIGNED BY
PAMELA C. CREEDON, Executive Officer

CONTENTS

I. FACILITY INFORMATION 3
II. FINDINGS 3
III. DISCHARGE PROHIBITIONS 4
IV. EFFLUENT LIMITATIONS AND DISCHARGE SPECIFICATIONS 4
A. EFFLUENT LIMITATIONS – DISCHARGE POINT NO. 001 4
1. FINAL EFFLUENT LIMITATIONS – DISCHARGE POINT NO. 001 4
2. INTERIM EFFLUENT LIMITATIONS – NOT APPLICABLE 5
B. LAND DISCHARGE SPECIFICATIONS – DISCHARGE POINT LND-001 6
C. RECYCLING SPECIFICATIONS – NOT APPLICABLE 6
V. RECEIVING WATER LIMITATIONS 6
A. SURFACE WATER LIMITATIONS 6
B. GROUNDWATER LIMITATIONS 8
VI. PROVISIONS 8
A. STANDARD PROVISIONS 8
B. MONITORING AND REPORTING PROGRAM (MRP) REQUIREMENTS 12
C. SPECIAL PROVISIONS 12
1. REOPENER PROVISIONS 12
2. SPECIAL STUDIES, TECHNICAL REPORTS AND ADDITIONAL MONITORING REQUIREMENTS 13
3. BEST MANAGEMENT PRACTICES AND POLLUTION PREVENTION 15
4. CONSTRUCTION, OPERATION AND MAINTENANCE SPECIFICATIONS 16
5. SPECIAL PROVISIONS FOR MUNICIPAL FACILITIES (POTW'S ONLY) 17
6. OTHER SPECIAL PROVISIONS – NOT APPLICABLE 18
7. COMPLIANCE SCHEDULES – NOT APPLICABLE 18
VII. COMPLIANCE DETERMINATION 18

TABLES

TABLE 1. DISCHARGER INFORMATION 1
TABLE 2. DISCHARGE LOCATION 1
TABLE 3. ADMINISTRATIVE INFORMATION 1
TABLE 4. EFFLUENT LIMITATIONS 5
TABLE 5. LAND DISCHARGE SPECIFICATIONS 6

ATTACHMENTS

ATTACHMENT A – DEFINITIONS A-1
ATTACHMENT B – MAPS B-1
ATTACHMENT C – FLOW SCHEMATIC C-1
ATTACHMENT D – STANDARD PROVISIONS D-1
ATTACHMENT E – MONITORING AND REPORTING PROGRAM E-1
ATTACHMENT F – FACT SHEET F-1
ATTACHMENT G – SUMMARY OF REASONABLE POTENTIAL ANALYSIS G-1
ATTACHMENT H – CALCULATION OF WQBEL'S H-1

I. FACILITY INFORMATION

Information describing the San Andreas Sanitary District Wastewater Treatment Plant (Facility) is summarized in Table 1 and in sections I and II of the Fact Sheet (Attachment F). Section I of the Fact Sheet also includes information regarding the Facility's permit application.

II. FINDINGS

The California Regional Water Quality Control Board, Central Valley Region (hereinafter Central Valley Water Board), finds:

A. Legal Authorities. This Order serves as WDR's pursuant to article 4, chapter 4, division 7 of the California Water Code (commencing with section 13260).This Order is also issued pursuant to section 402 of the federal Clean Water Act (CWA) and implementing regulations adopted by the U.S. EPA and chapter 5.5, division 7 of the Water Code (commencing with section 13370). It shall serve as an NPDES permit for point source discharges from this facility to surface waters.

B. Background and Rationale for Requirements. The Central Valley Water Board developed the requirements in this Order based on information submitted as part of the application, through monitoring and reporting programs, and other available information. The Fact Sheet (Attachment F), which contains background information and rationale for the requirements in this Order, is hereby incorporated into and constitutes Findings for this Order. Attachments A through E and G through H are also incorporated into this Order.

C. Provisions and Requirements Implementing State Law. The provisions/requirements in subsections IV.B, IV.C, and V.B are included to implement state law only. These provisions/requirements are not required or authorized under the federal CWA; consequently, violations of these provisions/requirements are not subject to the enforcement remedies that are available for NPDES violations.

D. Monitoring and Reporting. 40 CFR 122.48 requires that all NPDES permits specify requirements for recording and reporting monitoring results. Water Code sections 13267 and 13383 authorize the Central Valley Water Board to require technical and monitoring reports. The Monitoring and Reporting Program establishes monitoring and reporting requirements to implement federal and State requirements. The Monitoring and Reporting Program is provided in Attachment E.

The technical and monitoring reports in this Order are required in accordance with Water Code section 13267, which states the following in subsection (b)(1), *"In conducting an investigation specified in subdivision (a), the regional board may require that any person who has discharged, discharges, or is suspected of having discharged discharging, or who proposes to discharge waste within its region, or any citizen or domiciliary, or political agency or entity of this state who has discharged, discharges, or is suspected of having discharged or discharging, or who proposes to discharge, waste outside of its region could affect the quality of waters within its region shall furnish, under penalty of perjury, technical or monitoring program reports which the regional board requires. The burden, including costs, of these reports shall bear a reasonable relationship to the need for the report and the benefits to be obtained from the reports. In requiring those reports, the regional board shall provide the person with a written explanation with regard to the need for the reports, and shall identify the evidence that supports requiring that person to provide the reports."*

The Discharger owns and operates the Facility subject to this Order. The monitoring reports required by this Order are necessary to determine compliance with this Order. The need for the monitoring reports is discussed in the Fact Sheet.

E. Notification of Interested Parties. The Central Valley Water Board has notified the Discharger and interested agencies and persons of its intent to prescribe WDR's for the discharge and has provided them with an opportunity to submit their written comments and recommendations. Details of the notification are provided in the Fact Sheet.

F. Consideration of Public Comment. The Central Valley Water Board, in a public meeting, heard and considered all comments pertaining to the discharge. Details of the Public Hearing are provided in the Fact Sheet.

THEREFORE, IT IS HEREBY ORDERED that Order R5-2009-0007 is rescinded upon the effective date of this Order except for enforcement purposes, and, in order to meet the provisions contained in division 7 of the Water Code (commencing with section 13000) and regulations adopted thereunder, and the provisions of the CWA and regulations and guidelines adopted thereunder, the Discharger shall comply with the requirements in this Order. This action in no way prevents the Central Valley Water Board from taking enforcement action for past violations of the previous Order.

III. DISCHARGE PROHIBITIONS

A. Discharge of wastewater from the Facility, as the Facility is specifically described in the Fact Sheet in section II, in a manner different from that described in this Order is prohibited.

B. The by-pass or overflow of wastes to surface waters is prohibited, except as allowed by Federal Standard Provisions I.G. and I.H. (Attachment D).

C. Neither the discharge nor its treatment shall create a nuisance as defined in section 13050 of the Water Code.

D. The Discharger shall not allow pollutant-free wastewater to be discharged into the treatment or disposal, system in amounts that significantly diminish the system's capability to comply with this Order. Pollutant-free wastewater means rainfall, groundwater, cooling waters, and condensates that are essentially free of pollutants.

E. The discharge of effluent to the North Fork Calaveras River is prohibited from 1 May through 31 October of each year.

F. The discharge of treated effluent to the North Fork Calaveras River in quantities that do not receive a minimum of 20:1 dilution as a daily average (receiving water flow ; effluent flow) is prohibited.

G. The discharge of wastewater to surface waters or surface water drainage courses from the Dedicated Land Disposal Area (DLDA) is prohibited.

IV. EFFLUENT LIMITATIONS AND DISCHARGE SPECIFICATIONS

A. Effluent Limitations – Discharge Point No. 001

1. Final Effluent Limitations – Discharge Point No. 001

The Discharger shall maintain compliance with the following effluent limitations at Discharge Point No. 001, with compliance measured at Monitoring Location EFF-001 as described in the Monitoring and Reporting Program, Attachment E:

a. The Discharger shall maintain compliance with the effluent limitations specified in Table 4:

Table 4. Effluent Limitations

Parameter	Units	Effluent Limitations				
		Average Monthly	Average Weekly	Maximum Daily	Instantaneous Minimum	Instantaneous Maximum
Biochemical Oxygen Demand 5-day @ 20°C	mg/L	30	45	60	--	--
	lbs/day[1]	380	560	750	--	--
Total Suspended Solids	mg/L	30	45	60	--	--
	lbs/day[1]	380	560	750	--	--
pH	standard units	--	--	--	6.5	8.5
Cyanide, Total (as CN)	µg/L	3.8	--	9.4	--	--
Ammonia Nitrogen, Total (as N)	mg/L	1.8	--	3.6	--	--
	lbs/day[1]	23	--	45	--	--

1. Based on an average daily discharge flow of 1.5 MGD.

b. **Percent Removal:** The average monthly percent removal of Biochemical Oxygen Demand 5-day 20°C (BOD_5) and total suspended solids (TSS) shall not be less than 85 percent.

c. **Acute Whole Effluent Toxicity.** Survival of aquatic organisms in 96-hour bioassays of undiluted waste shall be no less than:

   i. 70%, minimum for any one bioassay; and

   ii. 90%, median for any three consecutive bioassays.

d. **Total Residual Chlorine.** Effluent total residual chlorine shall not exceed:

   i. 0.011 mg/L, as a 4-day average; and

   ii. 0.019 mg/L, as a 1-hour average.

e. **Total Coliform Organisms.** Effluent total coliform organisms shall not exceed:

   i. 23 most probable number (MPN) per 100 mL, as a 7-day median; and

   ii. 240 MPN/100 mL, more than once in any 30-day period.

f. **Average Daily Discharge Flow.** The average daily discharge flow shall not exceed 1.5 MGD

g. **Electrical Conductivity.** For a surface water discharge season (i.e., 1 November – 30 April), the average effluent electrical conductivity shall not exceed 700 µmhos/cm.

h. **Chronic Whole Effluent Toxicity.** There shall be no chronic toxicity in the effluent discharge.

2. Interim Effluent Limitations – Not Applicable

B. Land Discharge Specifications – Discharge Point LND-001

1. Effective immediately the Discharger shall maintain compliance with the following limitations of discharge to the Designated Land Disposal Area (DLDA), with compliance measured at Monitoring Location LND-001 as described in the attached MRP.

Table 5. Land Discharge Specifications

Parameter	Units	Discharge Specifications			
		Annual Average	Average Monthly	Monthly Median	Maximum Daily
Biochemical oxygen Demand (5-day @ 25°C)	mg/L	--	40	--	80
Total Nitrogen (as N)	mg/L	34	--	--	--
Total Coliform Organisms	MPN/100 mL	--	--	23	240

C. Recycling Specifications – Not Applicable

V. RECEIVING WATER LIMITATIONS

A. Surface Water Limitations

The discharge shall not cause the following in the North Fork Calaveras River.

1. **Bacteria.** The fecal coliform concentration, based on a minimum of not less than five samples for any 30-day period, to exceed a geometric mean of 200 MPN/100 mL, nor more than 10 percent of the total number of fecal coliform samples taken during any 30-day period to exceed 400 MPN/100 mL.
2. **Biostimulatory Substances.** Water to contain biostimulatory substances which promote aquatic growths in concentrations that cause nuisance or adversely affect beneficial uses.
3. **Chemical Constituents.** Chemical constituents to be present in concentrations that adversely affect beneficial uses.
4. **Color.** Discoloration that causes nuisance or adversely affects beneficial uses.
5. **Dissolved Oxygen:**
   a. The monthly median of the mean daily dissolved oxygen concentration to fall below 85 percent of saturation in the main water mass **;**
   b. The 95 percentile dissolved oxygen concentration to fall below 75 percent of saturation; nor
   c. The dissolved oxygen concentration to be reduced below <7.0 mg/L at any time.
6. **Floating Material.** Floating material to be present in amounts that cause nuisance or adversely affect beneficial uses.
7. **Oil and Grease.** Oils, greases, waxes, or other materials to be present in concentrations that cause nuisance, result in a visible film or coating on the surface of the water or on objects in the water, or otherwise adversely affect beneficial uses.
8. **pH.** The pH to be depressed below 6.5 nor raised above 8.5.

9. **Pesticides:**

    a. Pesticides to be present, individually or in combination, in concentrations that adversely affect beneficial uses;

    b. Pesticides to be present in bottom sediments or aquatic life in concentrations that adversely affect beneficial uses;

    c. Total identifiable persistent chlorinated hydrocarbon pesticides to be present in the water column at concentrations detectable within the accuracy of analytical methods approved by USEPA or the Executive Officer. ;

    d. Pesticide concentrations to exceed those allowable by applicable antidegradation policies (see State Water Board Resolution No. 68-16 and 40 CFR 131.12.);

    e. Pesticide concentrations to exceed the lowest levels technically and economically achievable;

    f. Pesticides to be present in concentration in excess of the maximum contaminant levels set forth in CCR, Title 22, division 4, chapter 15; nor

    g. Thiobencarb to be present in excess of 1.0 µg/L.

10. **Radioactivity.** Radionuclides to be present in concentrations that are harmful to human, plant, animal, or aquatic life nor that result in the accumulation of radionuclides in the food web to an extent that presents a hazard to human, plant, animal, or aquatic life.

11. **Suspended Sediments.** The suspended sediment load and suspended sediment discharge rate of surface waters to be altered in such a manner as to cause nuisance or adversely affect beneficial uses.

12. **Settleable Substances.** Substances to be present in concentrations that result in the deposition of material that causes nuisance or adversely affects beneficial uses.

13. **Suspended Material.** Suspended material to be present in concentrations that cause nuisance or adversely affect beneficial uses.

14. **Taste and Odors.** Taste- or odor-producing substances to be present in concentrations that impart undesirable tastes or odors to fish flesh or other edible products of aquatic origin, or that cause nuisance, or otherwise adversely affect beneficial.

15. **Temperature.** The natural temperature to be increased by more than 5°F. Compliance to be determined based on the difference in temperature at RSW-001 and RSW-002.

16. **Toxicity.** Toxic substances to be present, individually or in combination, in concentrations that produce detrimental physiological responses in human, plant, animal, or aquatic life.

17. **Turbidity.**

    a. Shall not exceed 2 Nephelometric Turbidity Units (NTU) where natural turbidity is less than 1 NTU;

    b. Shall not increase more than 1 NTU where natural turbidity is between 1 and 5 NTUs;

    c. Shall not increase more than 20 percent where natural turbidity is between 5 and 50 NTUs;

    d. Shall not increase more than 10 NTU where natural turbidity is between 50 and 100 NTUs; nor

e. Shall not increase more than 10 percent where natural turbidity is greater than 100 NTUs.

B. Groundwater Limitations

Release of waste constituents from any portion of the Facility shall not cause groundwater to:

1. Contain waste constituents in concentrations statistically greater than background groundwater quality.

2. Exceed a total coliform organism level of 2.2 MPN/100mL.

3. Exhibit a pH of less than 6.5 or greater than 8.4 pH units.

4. Contain taste or odor-producing constituents, toxic substances, or any other constituents in concentrations that cause nuisance or adversely affect beneficial uses.

Compliance with these limitations shall be determined annually based on comparison of downgradient well concentrations to background groundwater quality using historical monitoring data, using approved statistical methods.

VI. PROVISIONS

A. Standard Provisions

1. The Discharger shall comply with all Standard Provisions included in Attachment D.
2. The Discharger shall comply with the following provisions. In the event that there is any conflict, duplication, or overlap between provisions specified by this Order, the more stringent provision shall apply:

   a. If the Discharger's wastewater treatment plant is publicly owned or subject to regulation by California Public Utilities Commission, it shall be supervised and operated by persons possessing certificates of appropriate grade according to Title 23, CCR, division 3, chapter 26.

   b. After notice and opportunity for a hearing, this Order may be terminated or modified for cause, including, but not limited to:

      i. violation of any term or condition contained in this Order;

      ii. obtaining this Order by misrepresentation or by failing to disclose fully all relevant facts;

      iii. a change in any condition that requires either a temporary or permanent reduction or elimination of the authorized discharge; and

      iv. a material change in the character, location, or volume of discharge.

   The causes for modification include:

   - *New regulations.* New regulations have been promulgated under section 405(d) of the CWA, or the standards or regulations on which the permit was based have been changed by promulgation of amended standards or regulations or by judicial decision after the permit was issued.

   - *Land application plans.* When required by a permit condition to incorporate a land application plan for beneficial reuse of sewage sludge, to revise an existing land application plan, or to add a land application plan.

- *Change in sludge use or disposal practice.* Under 40 CFR 122.62(a)(1), a change in the Discharger's sludge use or disposal practice is a cause for modification of the permit. It is cause for revocation and reissuance if the Discharger requests or agrees.

The Central Valley Water Board may review and revise this Order at any time upon application of any affected person or the Central Valley Water Board's own motion.

c. If a toxic effluent standard or prohibition (including any scheduled compliance specified in such effluent standard or prohibition) is established under section 307(a) of the CWA, or amendments thereto, for a toxic pollutant that is present in the discharge authorized herein, and such standard or prohibition is more stringent than any limitation upon such pollutant in this Order, the Central Valley Water Board will revise or modify this Order in accordance with such toxic effluent standard or prohibition.

   The Discharger shall comply with effluent standards and prohibitions within the time provided in the regulations that establish those standards or prohibitions, even if this Order has not yet been modified.

d. This Order shall be modified, or alternately revoked and reissued, to comply with any applicable effluent standard or limitation issued or approved under sections 301(b)(2)(C) and (D), 304(b)(2), and 307(a)(2) of the CWA, if the effluent standard or limitation so issued or approved:

   i. Contains different conditions or is otherwise more stringent than any effluent limitation in the Order; or

   ii. Controls any pollutant limited in the Order.

   The Order, as modified or reissued under this paragraph, shall also contain any other requirements of the CWA then applicable.

e. The provisions of this Order are severable. If any provision of this Order is found invalid, the remainder of this Order shall not be affected.

f. The Discharger shall take all reasonable steps to minimize any adverse effects to waters of the State or users of those waters resulting from any discharge or sludge use or disposal in violation of this Order. Reasonable steps shall include such accelerated or additional monitoring as necessary to determine the nature and impact of the non-complying discharge or sludge use or disposal.

g. The Discharger shall ensure compliance with any existing or future pretreatment standard promulgated by USEPA under section 307 of the CWA, or amendment thereto, for any discharge to the municipal system.

h. A copy of this Order shall be maintained at the discharge facility and be available at all times to operating personnel. Key operating personnel shall be familiar with its content.

i. Safeguard to electric power failure:

   i. The Discharger shall provide safeguards to assure that, should there be reduction, loss, or failure of electric power, the discharge shall comply with the terms and conditions of this Order.

   ii. Upon written request by the Central Valley Water Board, the Discharger shall submit a written description of safeguards. Such safeguards may include

alternate power sources, standby generators, retention capacity, operating procedures, or other means. A description of the safeguards provided shall include an analysis of the frequency, duration, and impact of power failures experienced over the past 5 years on effluent quality and on the capability of the Discharger to comply with the terms and conditions of the Order. The adequacy of the safeguards is subject to the approval of the Central Valley Water Board.

iii. Should the treatment works not include safeguards against reduction, loss, or failure of electric power, or should the Central Valley Water Board not approve the existing safeguards, the Discharger shall, within 90 days of having been advised in writing by the Central Valley Water Board that the existing safeguards are inadequate, provide to the Central Valley Water Board and USEPA a schedule of compliance for providing safeguards such that in the event of reduction, loss, or failure of electric power, the Discharger shall comply with the terms and conditions of this Order. The schedule of compliance shall, upon approval of the Central Valley Water Board, become a condition of this Order.

j. The Discharger, upon written request of the Central Valley Water Board, shall file with the Board a technical report on its preventive (failsafe) and contingency (cleanup) plans for controlling accidental discharges, and for minimizing the effect of such events. This report may be combined with that required under the Central Valley Water Board Standard Provision contained in section VI.A.2.i of this Order.

The technical report shall:

i. Identify the possible sources of spills, leaks, untreated waste by-pass, and contaminated drainage. Loading and storage areas, power outage, waste treatment unit outage, and failure of process equipment, tanks and pipes should be considered.

ii. Evaluate the effectiveness of present facilities and procedures and state when they became operational.

iii. Predict the effectiveness of the proposed facilities and procedures and provide an implementation schedule containing interim and final dates when they will be constructed, implemented, or operational.

The Central Valley Water Board, after review of the technical report, may establish conditions which it deems necessary to control accidental discharges and to minimize the effects of such events. Such conditions shall be incorporated as part of this Order, upon notice to the Discharger.

k. A publicly owned treatment works whose waste flow has been increasing, or is projected to increase, shall estimate when flows will reach hydraulic and treatment capacities of its treatment and disposal facilities. The projections shall be made in January, based on the last 3 years' average dry weather flows, peak wet weather flows and total annual flows, as appropriate. When any projection shows that capacity of any part of the facilities may be exceeded in 4 years, the Discharger shall notify the Central Valley Water Board by 31 January. A copy of the notification shall be sent to appropriate local elected officials, local permitting agencies and the press. Within 120 days of the notification, the Discharger shall submit a technical report showing how it will prevent flow volumes from exceeding capacity or how it will increase capacity to handle the larger flows. The Central Valley Water Board may extend the time for submitting the report.

l. The Discharger shall submit technical reports as directed by the Executive Officer. All technical reports required herein that involve planning, investigation, evaluation, or design, or other work requiring interpretation and proper application of engineering or geologic sciences, shall be prepared by or under the direction of persons registered to practice in California pursuant to California Business and Professions Code, sections 6735, 7835, and 7835.1. To demonstrate compliance with Title 16, CCR, sections 415 and 3065, all technical reports must contain a statement of the qualifications of the responsible registered professional(s). As required by these laws, completed technical reports must bear the signature(s) and seal(s) of the registered professional(s) in a manner such that all work can be clearly attributed to the professional responsible for the work.

m. The Central Valley Water Board is authorized to enforce the terms of this permit under several provisions of the Water Code, including, but not limited to, sections 13385, 13386, and 13387.

n. For publicly owned treatment works, prior to making any change in the point of discharge, place of use, or purpose of use of treated wastewater that results in a permanent decrease of flow in any portion of a watercourse, the Discharger must file a petition with the State Water Board, Division of Water Rights, and receive approval for such a change. (Water Code section 1211).

o. In the event of any change in control or ownership of land or waste discharge facilities presently owned or controlled by the Discharger, the Discharger shall notify the succeeding owner or operator of the existence of this Order by letter, a copy of which shall be immediately forwarded to the Central Valley Water Board.

   To assume operation under this Order, the succeeding owner or operator must apply in writing to the Executive Officer requesting transfer of the Order. The request must contain the requesting entity's full legal name, the state of incorporation if a corporation, address and telephone number of the persons responsible for contact with the Central Valley Water Board and a statement. The statement shall comply with the signatory and certification requirements in the federal Standard Provisions (Attachment D, section V.B) and state that the new owner or operator assumes full responsibility for compliance with this Order. Failure to submit the request shall be considered a discharge without requirements, a violation of the Water Code. Transfer shall be approved or disapproved in writing by the Executive Officer.

p. Failure to comply with provisions or requirements of this Order, or violation of other applicable laws or regulations governing discharges from this facility, may subject the Discharger to administrative or civil liabilities, criminal penalties, and/or other enforcement remedies to ensure compliance. Additionally, certain violations may subject the Discharger to civil or criminal enforcement from appropriate local, state, or federal law enforcement entities.

q. In the event the Discharger does not comply or will be unable to comply for any reason, with any prohibition, average monthly effluent limitations, average weekly effluent limitations, and maximum daily effluent limitations, or receiving water limitation of this Order, the Discharger shall notify the Central Valley Water Board by telephone (916) 464-3291 within 24 hours of having knowledge of such noncompliance, and shall confirm this notification in writing within five days, unless the Central Valley Water Board waives confirmation. The written notification shall state the nature, time, duration, and cause of noncompliance, and shall describe the measures being taken to remedy the current noncompliance and prevent recurrence

including, where applicable, a schedule of implementation. Other noncompliance requires written notification as above at the time of the normal monitoring report.

B. Monitoring and Reporting Program (MRP) Requirements

The Discharger shall comply with the MRP, and future revisions thereto, in Attachment E.

C. Special Provisions

1. Reopener Provisions

a. Conditions that necessitate a major modification of a permit are described in 40 CFR 122.62, including, but not limited to:

i. If new or amended applicable water quality standards are promulgated or approved pursuant to section 303 of the CWA, or amendments thereto, this permit may be reopened and modified in accordance with the new or amended standards.

ii. When new information, that was not available at the time of permit issuance, would have justified different permit conditions at the time of issuance.

b. This Order may be reopened for modification, or revocation and reissuance, as a result of the detection of a reportable priority pollutant generated by special conditions included in this Order. These special conditions may be, but are not limited to, fish tissue sampling, whole effluent toxicity, monitoring requirements on internal waste stream(s), and monitoring for surrogate parameters. Additional requirements may be included in this Order as a result of the special condition monitoring data.

c. **Whole Effluent Toxicity.** As a result of a Toxicity Reduction Evaluation (TRE), this Order may be reopened to include a chronic toxicity limitation, a new acute toxicity limitation, and/or a limitation for a specific toxicant identified in the TRE. Additionally, if the State Water Board revises the SIP's toxicity control provisions that would require the establishment of numeric chronic toxicity effluent limitations, this Order may be reopened to include a numeric chronic toxicity effluent limitation based on the new provisions.

d. **Water Effects Ratios (WER) and Metal Translators.** A default WER of 1.0 has been used in this Order for calculating CTR criteria for applicable priority pollutant inorganic constituents, except copper. In addition, default dissolved-to-total metal translators have been used to convert water quality objectives from dissolved to total recoverable when developing effluent limitations for metals. If the Discharger performs studies to determine site-specific WERs and/or site-specific dissolved-to-total metal translators, this Order may be reopened to modify the effluent limitations for the applicable inorganic constituents.

e. **Drinking Water Policy.** On 26 July 2013 the Central Valley Water Board adopted Resolution No. R5-2013-0098 amending the Basin Plan and establishing a Drinking Water Policy. The State Water Board approved the Drinking Water Policy on 3 December 2013. This Order may be reopened to incorporate monitoring of drinking water constituents to implement the Drinking Water Policy.

f. **Extension of Surface Water Discharge Season.** This Order prohibits discharges to the North Fork Calaveras River from 1 May through 31 October of each year. Upon submission of an evaluation demonstrating that utilization of the additional land disposal does not mitigate the need for an extension of the surface water discharge

season, this Order may be reopened to extend the permitted period of surface water discharge.

g. **Flow Ratio Prohibition.** This Order includes a prohibition of discharges of treated wastewater to the North Fork Calaveras River which do not receive a minimum of 20:1 dilution as a daily average. In order to revise the discharge prohibition to allow discharges that do not receive 20:1 dilution, the Discharger must submit an antidegradation analysis analyzing the potential effects of increased loadings, at the revised flow ratio. Upon submission of an approved antidegradation analysis demonstrating the increased loadings comply with the State and federal antidegradation requirements, this Order may be reopened to revise the discharge prohibition to allow discharges that do not receive 20:1 dilution.

h. **Dilution/Mixing Zone Study.** In order for the Central Valley Water Board to allow dilution credits for the calculation of WQBEL's for the protection of aquatic life, the Discharger must submit an approved Dilution/Mixing Zone Study which meets all of the requirements of Section 1.4.2.2 of the SIP. Upon submission of an approved Dilution/Mixing Zone Study that meets all of the requirements of Section 1.4.2.2 of the SIP, including defining the boundaries of the acute and chronic mixing areas, the Central Valley Water Board may reopen this Order to include effluent limitations based on the appropriate dilution factor for the protection of aquatic life.

i. **Persistent Chlorinated Hydrocarbon Pesticides Study.** If after review of the pesticide study results it is determined that the discharge has reasonable potential to cause or contribute to an exceedance of a water quality objective for persistent chlorinated hydrocarbon pesticides this Order may be reopened and effluent limitations added for the subject constituents.

2. Special Studies, Technical Reports and Additional Monitoring Requirements

a. **Toxicity Reduction Evaluation Requirements.** For compliance with the Basin Plan's narrative toxicity objective, this Order requires the Discharger to conduct chronic whole effluent toxicity (WET) testing, as specified in MRP section V. Furthermore, this Provision requires the Discharger to investigate the causes of, and identify corrective actions to reduce or eliminate effluent toxicity. If the discharge exceeds the numeric toxicity monitoring trigger during accelerated monitoring established in this Provision, the Discharger is required to initiate a Toxicity Reduction Evaluation (TRE) in accordance with an approved TRE Work Plan, and take actions to mitigate the impact of the discharge and prevent recurrence of toxicity. A TRE is a site-specific study conducted in a stepwise process to identify the source(s) of toxicity and the effective control measures for effluent toxicity. TREs are designed to identify the causative agents and sources of whole effluent toxicity, evaluate the effectiveness of the toxicity control options, and confirm the reduction in effluent toxicity. This Provision includes requirements for the Discharger to continue the implementation of the previously submitted TRE Work Plan and includes procedures for accelerated chronic toxicity monitoring and TRE initiation.

i. **Accelerated Monitoring and TRE Initiation.** When the numeric toxicity monitoring trigger is exceeded during regular chronic toxicity monitoring, and the testing meets all test acceptability criteria, the Discharger shall initiate accelerated monitoring as required in the Accelerated Monitoring Specifications. The Discharger shall initiate a TRE to address effluent toxicity if any WET testing results exceed the numeric toxicity monitoring trigger during accelerated monitoring.

ii. **Numeric Toxicity Monitoring Trigger.** The numeric toxicity monitoring trigger to initiate a TRE is > 4 TUc (where TUc = 100/NOEC). The monitoring trigger is not an effluent limitation; it is the toxicity threshold at which the Discharger is required to begin accelerated monitoring and initiate a TRE.

iii. **Accelerated Monitoring Specifications.** If the numeric toxicity monitoring trigger is exceeded during regular chronic toxicity testing, the Discharger shall initiate accelerated monitoring within 14-days of notification by the laboratory of the exceedance. Accelerated monitoring shall consist of four chronic toxicity tests conducted once every two weeks using the species that exhibited toxicity. The following protocol shall be used for accelerated monitoring and TRE initiation:

(a) If the results of four consecutive accelerated monitoring tests do not exceed the monitoring trigger, the Discharger may cease accelerated monitoring and resume regular chronic toxicity monitoring. However, notwithstanding the accelerated monitoring results, if there is adequate evidence of a pattern of effluent toxicity, the Executive Officer may require that the Discharger initiate a TRE.

(b) If the source(s) of the toxicity is easily identified (e.g., temporary plant upset), the Discharger shall make necessary corrections to the facility and shall continue accelerated monitoring until four consecutive accelerated tests do not exceed the monitoring trigger. Upon confirmation that the effluent toxicity has been removed, the Discharger may cease accelerated monitoring and resume regular chronic toxicity monitoring.

(c) If the result of any accelerated toxicity test exceeds the monitoring trigger, the Discharger shall cease accelerated monitoring and begin a TRE to investigate the cause(s) of, and identify corrective actions to reduce or eliminate effluent toxicity. Within thirty (30) days of notification by the laboratory of any test result exceeding the monitoring trigger during accelerated monitoring, the Discharger shall submit a TRE Action Plan to the Central Valley Water Board including, at minimum:

(1) Specific actions the Discharger will take to investigate and identify the cause(s) of toxicity, including a TRE WET monitoring schedule;

(2) Specific actions the Discharger will take to mitigate the impact of the discharge and prevent the recurrence of toxicity; and

(3) A schedule for these actions.

b. **Persistent Chlorinated Hydrocarbon Pesticides Study.** There are indications that the discharge may contain the persistent chlorinated hydrocarbon pesticides, 2,4-D, 2,4,5-TP (Silvex), Dalapon, and/or Dinoseb, in concentrations that have a reasonable potential to cause or contribute to an exceedance of water quality objectives: The Discharger shall comply with the following time schedule in conducting a study of these constituents' potential effect in surface waters:

Task	Compliance Date
i. **Effluent Sampling.** Collect four (4) effluent grab samples for each of 2,4-D, 2,4,5-TP (Slivex), Dalapon, and Dinoseb. Monitoring shall be conducted when discharging to surface water during the 1 November 2014 – 30 April 2015 discharge season (4 consecutive samples, approximately evenly distributed throughout the discharge season, once discharge begins). Upon completion of the final monitoring event, The Discharger shall submit written notification of completion of this task to the Central Valley Water Board.	**1 May 2015**[1]
ii. **Final Study.** Submit Final Study containing the results of the sampling required in task i. and a reasonable potential analysis evaluating if any data indicate the discharge demonstrates reasonable potential to cause or contribute to an exceedance of applicable water quality objectives.	**6 months** from date of last sample collection.
iii. **Treatment Feasibility Study/Work Plan (if necessary).** If it is found that reasonable potential exists for 2,4-D, 2,4,5-TP (Slivex), Dalapon, and/or Dinoseb, submit a Treatment Feasibility Study and Work Plan to reduce the discharge of the persistent chlorinated hydrocarbon pesticide(s).	**6 months** from completion of task ii.

[1] If North Fork Calaveras River flows are not sufficient to allow a surface water discharge to occur for a sufficient period to conduct the required sampling, this compliance date may be extended by the Executive Officer.

3. Best Management Practices and Pollution Prevention

a. **Pollution Prevention Plan for Mercury.** The Discharger shall prepare and implement a pollution prevention plan for mercury in accordance with Water Code section 13263.3(d)(3) . The minimum requirements for the pollution prevention plan are outlined in the Fact Sheet (Attachment F section VII.B.3.a). The pollution prevention plan shall be completed and submitted to the Central Valley Water Board by 1 July 2015.

b. **Salinity Evaluation and Minimization Plan.** The Discharger shall continue to implement a salinity evaluation and minimization plan to identify and address sources of salinity from the Facility.

4. Construction, Operation and Maintenance Specifications

a. **Storage Pond and DLDA Operating Requirements.**

i. The treatment facilities shall be designed, constructed, operated, and maintained to prevent inundation or washout due to floods with a 100-year return frequency.

ii. Public contact with wastewater shall be precluded through such means as fences, signs, and other acceptable alternatives.

iii. Ponds shall be managed to prevent breeding of mosquitoes. In particular,

(a) An erosion control program should assure that small coves and irregularities are not created around the perimeter of the water surface.

(b) Weeds shall be minimized.

(c) Dead algae, vegetation, and debris shall not accumulate on the water surface.

iv. Freeboard shall never be less than 2 feet (measured vertically to the lowest point of overflow.

v. Ponds shall have sufficient capacity to accommodate allowable wastewater flow and design seasonal precipitation and ancillary inflow and infiltration during the non-irrigation season. Design seasonal precipitation shall be based on total annual precipitation using a return period of 100 years, distributed monthly in accordance with historical rainfall patterns. Freeboard shall never be less than 2 feet (measured vertically to the lowest point of overflow).

vi. Prior to the onset of the rainy season of each year, available pond storage capacity shall at least equal the volume necessary to comply with the Land Discharge Specification at section VI.C.4.a.v. above.

vii. The monthly average dry weather flow to Pond D shall not exceed 0.4 MGD.

viii. The maximum monthly average discharge flow to Pond D shall not exceed 1.8 MGD.

ix. The discharge of waste classified as “hazardous” as defined in section 2521(a) of Title 23, California Code of Regulations (CCR), or “designated”, as defined in section 13173 of the Water Code, to the treatment ponds is prohibited.

x. Objectionable odors originating at this Facility shall not be perceivable beyond the limits of the wastewater treatment and disposal areas (or property owned by the Discharger).

xi. As a means of discerning compliance with Land Discharge Specification IV.C.4.a.x., the dissolved oxygen content in the upper zone (1 foot) of wastewater in ponds shall not be less than 1.0 mg/L.

xii. Pond D shall not have a pH less than 6.5 or greater than 9.0 averaged over a 24-hour period.

xiii. Irrigation runoff (tailwater) shall be completely contained within the DLDA or be returned to the Facility, and shall not enter any surface water drainage course.

xiv. Application of effluent to the DLDA shall comply with the following setback requirements:

Setback Definition[1]	Minimum Irrigation Setback (feet)
Edge of DLDA to property boundary	50
Edge of DLDA to public road	50
Edge of DLDA to irrigation well	100
Edge of DLDA to domestic well	100
Edge of DLDA to manmade or natural surface water drainage course [2] or spring	50

1. As defined by the wetted area produced during irrigation.
2. Excluding ditches used exclusively for tailwater return and drainages that do not discharge to surface waters.

xv. The discharge of treated wastewater to the DLDA shall be at reasonable irrigation application rates designed to minimize irrigation runoff.

xvi. Discharge to the DLDA shall not be performed during rainfall or when the ground is saturated.

xvii. Spray irrigation of effluent is prohibited when wind velocities exceed 30 mph.

xviii. The DLDA shall be managed to prevent breeding of mosquitoes. In particular:

(a) There shall be no standing water 72 hours after irrigation ceases;

(b) Low-pressure and unpressurized pipelines and ditches accessible to mosquitoes shall not be used to store effluent.

5. Special Provisions for Municipal Facilities (POTW's Only)

a. **Sludge/Biosolids Treatment or Discharge Specifications.** Sludge in this document means the solid, semisolid, and liquid residues removed during primary, secondary, or advanced wastewater treatment processes. Solid waste refers to grit and screening material generated during preliminary treatment. Residual sludge means sludge that will not be subject to further treatment at the wastewater treatment plant. Biosolids refer to sludge that has been treated and tested and shown to be capable of being beneficially and legally used pursuant to federal and state regulations as a soil amendment for agricultural, silvicultural, horticultural, and land reclamation activities as specified under 40 CFR Part 503.

i. Collected screenings, residual sludge, biosolids, and other solids removed from liquid wastes shall be disposed of in a manner approved by the Executive Officer, and consistent with Consolidated Regulations for Treatment, Storage, Processing, or Disposal of Solid Waste, as set forth in Title 27, CCR, division 2, subdivision 1, section 20005, et seq. Removal for further treatment, storage, disposal, or reuse at sites (e.g., landfill, composting sites, soil amendment sites) that are operated in accordance with valid waste discharge requirements issued by a Regional Water Board will satisfy these specifications.

Sludge and solid waste shall be removed from screens, sumps, ponds, clarifiers, etc. as needed to ensure optimal plant performance.

The treatment of sludge generated at the Facility shall be confined to the Facility property and conducted in a manner that precludes infiltration of waste constituents into soils in a mass or concentration that will violate groundwater limitations in section V.B. of this Order. In addition, the storage of residual sludge, solid waste, and biosolids on Facility property shall be temporary and controlled, and contained in a manner that minimizes leachate formation and precludes infiltration of waste constituents into soils in a mass or concentration that will violate groundwater limitations included in section V.B. of this Order.

ii. The use, disposal, storage, and transportation of biosolids shall comply with existing federal and state laws and regulations, including permitting requirements and technical standards included in 40 CFR Part 503. If the State Water Board and the Central Valley Water Board are given the authority to implement regulations contained in 40 CFR Part 503, this Order may be reopened to incorporate appropriate ts and technical standards. The Discharger must comply with the standards and time schedules contained in 40 CFR Part 503 whether or not they have been incorporated into this Order.

iii. The Discharger shall comply with Section IX.A. Biosolids of the Monitoring and Reporting Program, Attachment E.

iv. Any proposed change in biosolids use or disposal practice from a previously approved practice shall be reported to the Executive Officer and USEPA Regional Administrator at least 90 days in advance of the change.

v. The Discharger shall maintain a biosolids use or disposal plan that describes at minimum:

(a) Sources and amounts of biosolids generated annually.

(b) Location(s) of on-site storage and description of the containment area.

(c) Plans for ultimate disposal. For landfill disposal, include the present classification of the landfill; and the name and location of the landfill.

b. **Collection System.** On 2 May 2006, the State Water Board adopted State Water Board Order No. 2006-0003-DWQ, Statewide General WDR's for Sanitary Sewer Systems. The Discharger shall be subject to the requirements of Order No. 2006-0003-DWQ and any future revisions thereto. Order No. 2006-0003-DWQ requires that all public agencies that currently own or operate sanitary sewer systems apply for coverage under the general WDR's. The Discharger has applied for and has been approved for coverage under Order 2006-0003-DWQ for operation of its wastewater collection system.

6. Other Special Provisions – Not Applicable

7. Compliance Schedules – Not Applicable

VII. COMPLIANCE DETERMINATION

A. BOD_5 and TSS Effluent Limitations (Section IV.A.1.a.). Compliance with the final effluent limitations for BOD_5 and TSS required in Limitations and Discharge Requirements section IV.A.1.a shall be ascertained by 24-hour composite samples. Compliance with effluent limitations required in Limitations and Discharge Requirements section IV.A.1.b for percent removal shall be calculated using the arithmetic mean of BOD_5 and TSS in effluent samples collected over a monthly period as a percentage of the arithmetic mean of the values for influent samples collected at approximately the same times during the same period.

B. Average Daily Discharge Flow Effluent Limitations (Section IV.A.1.f.). The average daily discharge flow represents the mean of all daily flow values obtained within a calendar day (i.e., midnight through 11:59 PM).

C. Total Coliform Organisms Effluent Limitations (Section IV.A.1.e.).

i. **7-Day Median.** For each day that an effluent sample is collected and analyzed for total coliform organisms, the 7-day median shall be determined by calculating the median concentration of total coliform bacteria in the effluent utilizing the bacteriological results of the last 7 days. For example, if a sample is collected on a Wednesday, the result from that sampling event and all results from the previous 6 days (i.e., Tuesday, Monday, Sunday, Saturday, Friday, and Thursday) are used to calculate the 7-day median. If the 7-day median of total coliform organisms exceeds a most probable number (MPN) of 23 per 100 milliliters, the Discharger will be considered out of compliance.

ii. **Monthly Median**. Compliance with the total coliform monthly median land discharge specification (Section IV.B.1) shall be determined by calculating the median value of total coliform bacteria in the effluent utilizing all total coliform results during each calendar month.

D. Total Residual Chlorine Effluent Limitations (Section IV.A.1.d.). Continuous monitoring analyzers for chlorine residual or for dechlorination agent residual in the effluent are appropriate methods for compliance determination. A positive residual dechlorination agent in the effluent indicates that chlorine is not present in the discharge, which demonstrates compliance with the effluent limitations. This type of monitoring can also be used to prove that some chlorine residual exceedances are false positives. Continuous monitoring data showing either a positive dechlorination agent residual or a chlorine residual at or below the prescribed limit are sufficient to show compliance with the total residual chlorine effluent limitations, as long as the instruments are maintained and calibrated in accordance with the manufacturer's recommendations.

Any excursion above the 1-hour average or 4-day average total residual chlorine effluent limitations is a violation. If the Discharger conducts continuous monitoring and the Discharger can demonstrate, through data collected from a back-up monitoring system, that a chlorine spike recorded by the continuous monitor was not actually due to chlorine, then any excursion resulting from the recorded spike will not be considered an exceedance, but rather reported as a false positive. Records supporting validation of false positives shall be maintained in accordance with Section IV Standard Provisions (Attachment D).

E. Mass Effluent Limitations. The mass effluent limitations contained in the Final Effluent Limitations IV.A.1.a. are based on the permitted average daily discharge flow and calculated as follows:.

Mass (lbs/day) = Flow (MGD) x Concentration (mg/L) x 8.34 (conversion factor)

F. Priority Pollutant Effluent Limitations. Compliance with effluent limitations for priority pollutants shall be determined in accordance with Section 2.4.5 of the SIP, as follows:

1. Dischargers shall be deemed out of compliance with an effluent limitation, if the concentration of the priority pollutant in the monitoring sample is greater than the effluent limitation and greater than or equal to the reporting level (RL).

2. Dischargers shall be required to conduct a Pollutant Minimization Program (PMP) in accordance with section 2.4.5.1 of the SIP when there is evidence that the priority pollutant is present in the effluent above an effluent limitation and either:

a. A sample result is reported as detected, but not quantified (DNQ) and the effluent limitation is less than the RL; or

b. A sample result is reported as non-detect (ND) and the effluent limitation is less than the method detection limit (MDL).

3. When determining compliance with an average monthly effluent limitation (AMEL) and more than one sample result is available in a month, the discharger shall compute the arithmetic mean unless the data set contains one or more reported determinations of DNQ or ND. In those cases, the discharger shall compute the median in place of the arithmetic mean in accordance with the following procedure:

   a. The data set shall be ranked from low to high, reported ND determinations lowest, DNQ determinations next, followed by quantified values (if any). The order of the individual ND or DNQ determinations is unimportant.

   b. The median value of the data set shall be determined. If the data set has an odd number of data points, then the median is the middle value. If the data set has an even number of data points, then the median is the average of the two values around the middle unless one or both of the points are ND or DNQ, in which case the median value shall be the lower of the two data points where DNQ is lower than a value and ND is lower than DNQ.

4. If a sample result, or the arithmetic mean or median of multiple sample results, is below the RL, and there is evidence that the priority pollutant is present in the effluent above an effluent limitation and the discharger conducts a PMP (as described in section 2.4.5.1), the discharger shall <u>not</u> be deemed out of compliance.

G. Chronic Whole Effluent Toxicity Effluent Limitation (Section IV.A.1.h), Compliance with the accelerated monitoring and TRE provisions of Provision VI.C.2.a shall constitute compliance with the effluent limitation.

ATTACHMENT A – DEFINITIONS

Arithmetic Mean (μ)
Also called the average, is the sum of measured values divided by the number of samples. For ambient water concentrations, the arithmetic mean is calculated as follows:

Arithmetic mean = $\mu = \Sigma x / n$ where: Σx is the sum of the measured ambient water concentrations, and n is the number of samples.

Average Monthly Effluent Limitation (AMEL)
The highest allowable average of daily discharges over a calendar month, calculated as the sum of all daily discharges measured during a calendar month divided by the number of daily discharges measured during that month.

Average Weekly Effluent Limitation (AWEL)
The highest allowable average of daily discharges over a calendar week (Sunday through Saturday), calculated as the sum of all daily discharges measured during a calendar week divided by the number of daily discharges measured during that week.

Bioaccumulative
Those substances taken up by an organism from its surrounding medium through gill membranes, epithelial tissue, or from food and subsequently concentrated and retained in the body of the organism.

Carcinogenic
Pollutants are substances that are known to cause cancer in living organisms.

Coefficient of Variation (CV)
CV is a measure of the data variability and is calculated as the estimated standard deviation divided by the arithmetic mean of the observed values.

Daily Discharge
Daily Discharge is defined as either: (1) the total mass of the constituent discharged over the calendar day (12:00 am through 11:59 pm) or any 24-hour period that reasonably represents a calendar day for purposes of sampling (as specified in the permit), for a constituent with limitations expressed in units of mass or; (2) the unweighted arithmetic mean measurement of the constituent over the day for a constituent with limitations expressed in other units of measurement (e.g., concentration).

The daily discharge may be determined by the analytical results of a composite sample taken over the course of one day (a calendar day or other 24-hour period defined as a day) or by the arithmetic mean of analytical results from one or more grab samples taken over the course of the day.

For composite sampling, if 1 day is defined as a 24-hour period other than a calendar day, the analytical result for the 24-hour period will be considered as the result for the calendar day in which the 24-hour period ends.

Detected, but Not Quantified (DNQ)
DNQ are those sample results less than the RL, but greater than or equal to the laboratory's MDL. Sample results reported as DNQ are estimated concentrations.

Dilution Credit
Dilution Credit is the amount of dilution granted to a discharge in the calculation of a water quality-based effluent limitation, based on the allowance of a specified mixing zone. It is calculated from the

dilution ratio or determined through conducting a mixing zone study or modeling of the discharge and receiving water.

Effluent Concentration Allowance (ECA)
ECA is a value derived from the water quality criterion/objective, dilution credit, and ambient background concentration that is used, in conjunction with the coefficient of variation for the effluent monitoring data, to calculate a long-term average (LTA) discharge concentration. The ECA has the same meaning as waste load allocation (WLA) as used in U.S. EPA guidance (Technical Support Document For Water Quality-based Toxics Control, March 1991, second printing, EPA/505/2-90-001).

Enclosed Bays
Enclosed Bays means indentations along the coast that enclose an area of oceanic water within distinct headlands or harbor works. Enclosed bays include all bays where the narrowest distance between the headlands or outermost harbor works is less than 75 percent of the greatest dimension of the enclosed portion of the bay. Enclosed bays include, but are not limited to, Humboldt Bay, Bodega Harbor, Tomales Bay, Drake's Estero, San Francisco Bay, Morro Bay, Los Angeles-Long Beach Harbor, Upper and Lower Newport Bay, Mission Bay, and San Diego Bay. Enclosed bays do not include inland surface waters or ocean waters.

Estimated Chemical Concentration
The estimated chemical concentration that results from the confirmed detection of the substance by the analytical method below the ML value.

Estuaries
Estuaries means waters, including coastal lagoons, located at the mouths of streams that serve as areas of mixing for fresh and ocean waters. Coastal lagoons and mouths of streams that are temporarily separated from the ocean by sandbars shall be considered estuaries. Estuarine waters shall be considered to extend from a bay or the open ocean to a point upstream where there is no significant mixing of fresh water and seawater. Estuarine waters included, but are not limited to, the Sacramento-San Joaquin Delta, as defined in Water Code section 12220, Suisun Bay, Carquinez Strait downstream to the Carquinez Bridge, and appropriate areas of the Smith, Mad, Eel, Noyo, Russian, Klamath, San Diego, and Otay rivers. Estuaries do not include inland surface waters or ocean waters.

Inland Surface Waters
All surface waters of the state that do not include the ocean, enclosed bays, or estuaries.

Instantaneous Maximum Effluent Limitation
The highest allowable value for any single grab sample or aliquot (i.e., each grab sample or aliquot is independently compared to the instantaneous maximum limitation).

Instantaneous Minimum Effluent Limitation
The lowest allowable value for any single grab sample or aliquot (i.e., each grab sample or aliquot is independently compared to the instantaneous minimum limitation).

Maximum Daily Effluent Limitation (MDEL)
The highest allowable daily discharge of a pollutant, over a calendar day (or 24-hour period). For pollutants with limitations expressed in units of mass, the daily discharge is calculated as the total mass of the pollutant discharged over the day. For pollutants with limitations expressed in other units of measurement, the daily discharge is calculated as the arithmetic mean measurement of the pollutant over the day.

Median
The middle measurement in a set of data. The median of a set of data is found by first arranging the measurements in order of magnitude (either increasing or decreasing order). If the number of measurements (n) is odd, then the median = $X_{(n+1)/2}$. If n is even, then the median = $(X_{n/2} + X_{(n/2)+1})/2$ (i.e., the midpoint between the n/2 and n/2+1).

Method Detection Limit (MDL)
MDL is the minimum concentration of a substance that can be measured and reported with 99 percent confidence that the analyte concentration is greater than zero, as defined in in 40 C.F.R. part 136, Attachment B, revised as of July 3, 1999.

Minimum Level (ML)
ML is the concentration at which the entire analytical system must give a recognizable signal and acceptable calibration point. The ML is the concentration in a sample that is equivalent to the concentration of the lowest calibration standard analyzed by a specific analytical procedure, assuming that all the method specified sample weights, volumes, and processing steps have been followed.

Mixing Zone
Mixing Zone is a limited volume of receiving water that is allocated for mixing with a wastewater discharge where water quality criteria can be exceeded without causing adverse effects to the overall water body.

Not Detected (ND)
Sample results which are less than the laboratory's MDL.

Ocean Waters
The territorial marine waters of the State as defined by California law to the extent these waters are outside of enclosed bays, estuaries, and coastal lagoons. Discharges to ocean waters are regulated in accordance with the State Water Board's California Ocean Plan.

Persistent Pollutants
Persistent pollutants are substances for which degradation or decomposition in the environment is nonexistent or very slow.

Pollutant Minimization Program (PMP)
PMP means waste minimization and pollution prevention actions that include, but are not limited to, product substitution, waste stream recycling, alternative waste management methods, and education of the public and businesses. The goal of the PMP shall be to reduce all potential sources of a priority pollutant(s) through pollutant minimization (control) strategies, including pollution prevention measures as appropriate, to maintain the effluent concentration at or below the water quality-based effluent limitation. Pollution prevention measures may be particularly appropriate for persistent bioaccumulative priority pollutants where there is evidence that beneficial uses are being impacted. The Central Valley Water Board may consider cost effectiveness when establishing the requirements of a PMP. The completion and implementation of a Pollution Prevention Plan, if required pursuant to Water Code section 13263.3(d), shall be considered to fulfill the PMP requirements.

Pollution Prevention
Pollution Prevention means any action that causes a net reduction in the use or generation of a hazardous substance or other pollutant that is discharged into water and includes, but is not limited to, input change, operational improvement, production process change, and product reformulation (as defined in Water Code section 13263.3). Pollution prevention does not include actions that merely shift a pollutant in wastewater from one environmental medium to another environmental medium, unless

clear environmental benefits of such an approach are identified to the satisfaction of the State Water Resources Control Board (State Water Board) or Central Valley Water Board.

Satellite Collection System
The portion, if any, of a sanitary sewer system owned or operated by a different public agency than the agency that owns and operates the wastewater treatment facility that a sanitary sewer system is tributary to.

Source of Drinking Water
Any water designated as municipal or domestic supply (MUN) in a Central Valley Water Board Basin Plan.

Standard Deviation (σ)
Standard Deviation is a measure of variability that is calculated as follows:

$$\sigma = (\sum[(x - \mu)^2]/(n - 1))^{0.5}$$

where:
x is the observed value;
μ is the arithmetic mean of the observed values; and
n is the number of samples.

Toxicity Reduction Evaluation (TRE)
TRE is a study conducted in a step-wise process designed to identify the causative agents of effluent or ambient toxicity, isolate the sources of toxicity, evaluate the effectiveness of toxicity control options, and then confirm the reduction in toxicity. The first steps of the TRE consist of the collection of data relevant to the toxicity, including additional toxicity testing, and an evaluation of facility operations and maintenance practices, and best management practices. A Toxicity Identification Evaluation (TIE) may be required as part of the TRE, if appropriate. (A TIE is a set of procedures to identify the specific chemical(s) responsible for toxicity. These procedures are performed in three phases (characterization, identification, and confirmation) using aquatic organism toxicity tests.)

ATTACHMENT B – MAPS

Figure B-1. Map of Facility location

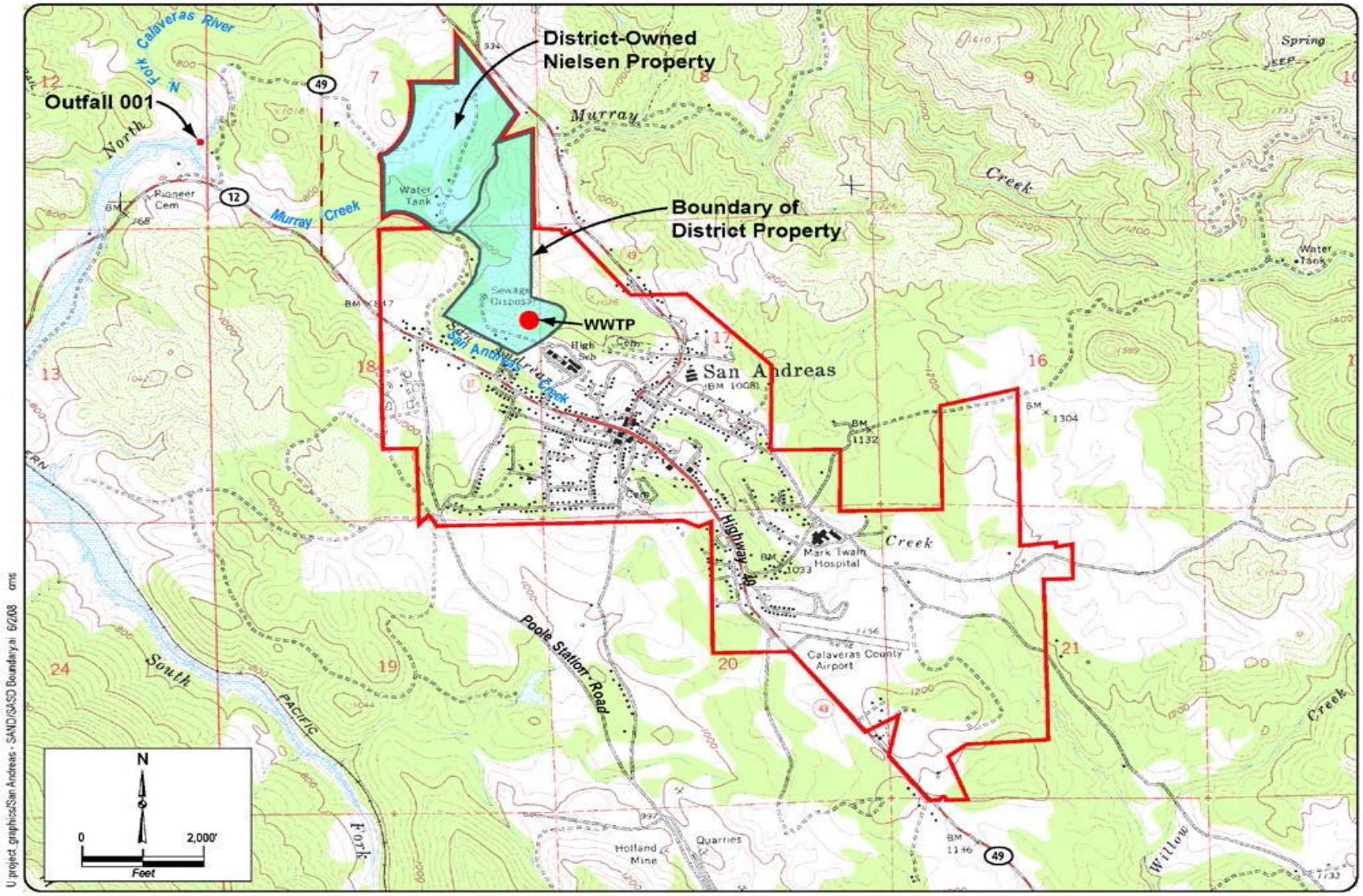

Figure B-2. Facility map depicting existing and planned future expansions to the DLDA

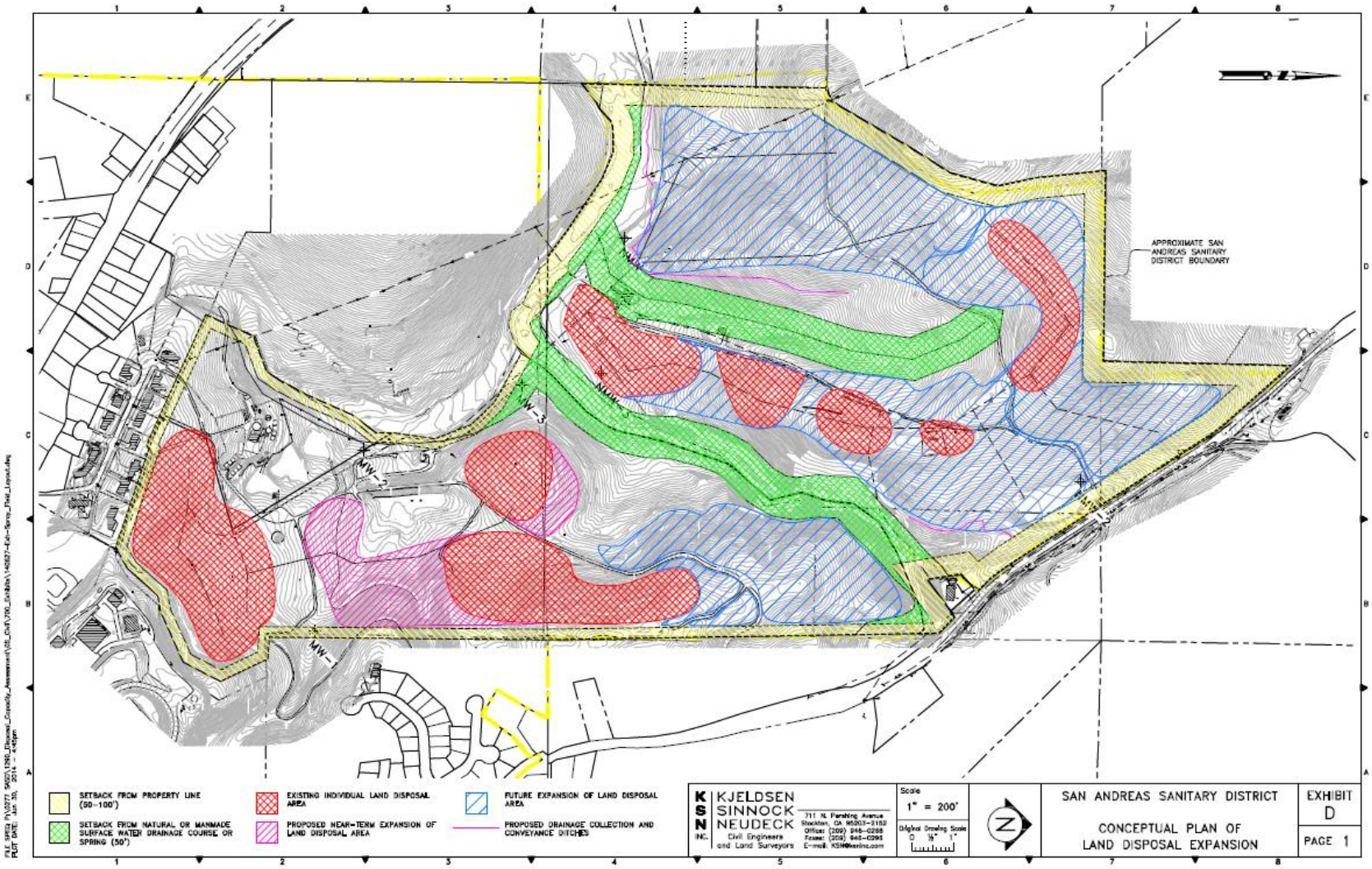

ATTACHMENT C – FLOW SCHEMATIC

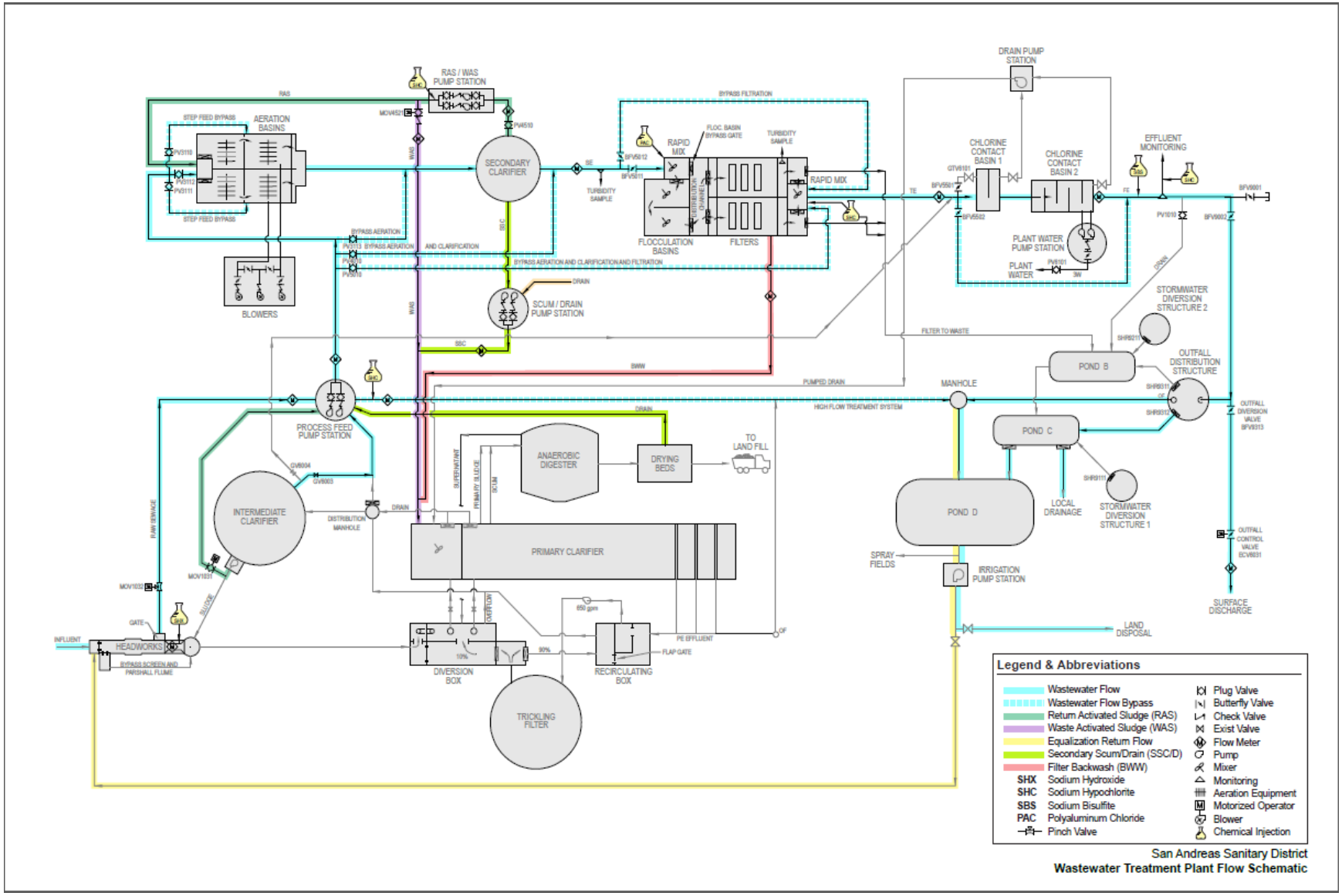

ATTACHMENT D – STANDARD PROVISIONS

I. STANDARD PROVISIONS – PERMIT COMPLIANCE

A. Duty to Comply

1. The Discharger must comply with all of the terms, requirements, and conditions of this Order. Any noncompliance constitutes a violation of the Clean Water Act (CWA) and the California Water Code and is grounds for enforcement action~~,~~; ~~for~~ permit termination, revocation and reissuance, or modification; denial of a permit renewal application; or a combination thereof. (40 C.F.R. § 122.41(a); Wat. Code, §§ 13261, 13263, 13265, 13268, 13000, 13001, 13304, 13350, 13385.)

2. The Discharger shall comply with effluent standards or prohibitions established under Section 307(a) of the CWA for toxic pollutants and with standards for sewage sludge use or disposal established under Section 405(d) of the CWA within the time provided in the regulations that establish these standards or prohibitions, even if this Order has not yet been modified to incorporate the requirement. (40 C.F.R. § 122.41(a)(1).)

B. Need to Halt or Reduce Activity Not a Defense

It shall not be a defense for a Discharger in an enforcement action that it would have been necessary to halt or reduce the permitted activity in order to maintain compliance with the conditions of this Order. (40 C.F.R. § 122.41(c).)

C. Duty to Mitigate

The Discharger shall take all reasonable steps to minimize or prevent any discharge or sludge use or disposal in violation of this Order that has a reasonable likelihood of adversely affecting human health or the environment. (40 C.F.R. § 122.41(d).)

D. Proper Operation and Maintenance

The Discharger shall at all times properly operate and maintain all facilities and systems of treatment and control (and related appurtenances) which are installed or used by the Discharger to achieve compliance with the conditions of this Order. Proper operation and maintenance also includes adequate laboratory controls and appropriate quality assurance procedures. This provision requires the operation of backup or auxiliary facilities or similar systems that are installed by a Discharger only when necessary to achieve compliance with the conditions of this Order. (40 C.F.R. § 122.41(e).)

E. Property Rights

1. This Order does not convey any property rights of any sort or any exclusive privileges. (40 C.F.R. § 122.41(g).)

2. The issuance of this Order does not authorize any injury to persons or property or invasion of other private rights, or any infringement of state or local law or regulations. (40 C.F.R. § 122.5(c).)

F. Inspection and Entry

The Discharger shall allow the Central Valley Water Board, State Water Board, U.S. EPA, and/or their authorized representatives (including an authorized contractor acting as their representative), upon the presentation of credentials and other documents, as may be required by law, to (33 U.S.C. § 1318(a)(4)(B); 40 C.F.R. § 122.41(i); Wat. Code, § 13267, 13383):

1. Enter upon the Discharger's premises where a regulated facility or activity is located or conducted, or where records are kept under the conditions of this Order (33 U.S.C § 1318(a)(4)(B)(ii); 40 C.F.R. § 122.41(i)(1); Wat. Code, §§ 13267, 13383);
2. Have access to and copy, at reasonable times, any records that must be kept under the conditions of this Order (33 U.S.C. § 1318(a)(4)(B)(ii); 40 C.F.R. § 122.41(i)(2); Wat. Code, §§ 13267, 13383);
3. Inspect and photograph, at reasonable times, any facilities, equipment (including monitoring and control equipment), practices, or operations regulated or required under this Order (33 U.S.C § 1318(a)(4)(B)(ii); 40 C.F.R. § 122.41(i)(3); Wat. Code, § 13267, 13383); and
4. Sample or monitor, at reasonable times, for the purposes of assuring Order compliance or as otherwise authorized by the CWA or the Water Code, any substances or parameters at any location. (33 U.S.C § 1318(a)(4)(B); 40 C.F.R. § 122.41(i)(4); Wat. Code, §§ 13267, 13383.)

G. Bypass

1. Definitions
   a. “Bypass” means the intentional diversion of waste streams from any portion of a treatment facility. (40 C.F.R. § 122.41(m)(1)(i).)
   b. “Severe property damage” means substantial physical damage to property, damage to the treatment facilities, which causes them to become inoperable, or substantial and permanent loss of natural resources that can reasonably be expected to occur in the absence of a bypass. Severe property damage does not mean economic loss caused by delays in production. (40 C.F.R. § 122.41(m)(1)(ii).)
2. Bypass not exceeding limitations. The Discharger may allow any bypass to occur which does not cause exceedances of effluent limitations, but only if it is for essential maintenance to assure efficient operation. These bypasses are not subject to the provisions listed in Standard Provisions – Permit Compliance I.G.3, I.G.4, and I.G.5 below. (40 C.F.R. § 122.41(m)(2).)
3. Prohibition of bypass. Bypass is prohibited, and the Central Valley Water Board may take enforcement action against a Discharger for bypass, unless (40 C.F.R. § 122.41(m)(4)(i)):
   a. Bypass was unavoidable to prevent loss of life, personal injury, or severe property damage (40 C.F.R. § 122.41(m)(4)(i)(A));
   b. There were no feasible alternatives to the bypass, such as the use of auxiliary treatment facilities, retention of untreated wastes, or maintenance during normal periods of equipment downtime. This condition is not satisfied if adequate back-up equipment should have been installed in the exercise of reasonable engineering judgment to prevent a bypass that occurred during normal periods of equipment downtime or preventive maintenance (40 C.F.R. § 122.41(m)(4)(i)(B)); and
   c. The Discharger submitted notice to the Central Valley Water Boardas required under Standard Provisions – Permit Compliance I.G.5 below. (40 C.F.R. § 122.41(m)(4)(i)(C).)
4. The Central Valley Water Board may approve an anticipated bypass, after considering its adverse effects, if the Central Valley Water Board determines that it will meet the three conditions listed in Standard Provisions – Permit Compliance I.G.3 above. (40 C.F.R. § 122.41(m)(4)(ii).)

5. Notice

   a. Anticipated bypass. If the Discharger knows in advance of the need for a bypass, it shall submit a notice, if possible at least 10 days before the date of the bypass. (40 C.F.R. § 122.41(m)(3)(i).)

   b. Unanticipated bypass. The Discharger shall submit notice of an unanticipated bypass as required in Standard Provisions - Reporting V.E below (24-hour notice). (40 C.F.R. § 122.41(m)(3)(ii).)

H. Upset

Upset means an exceptional incident in which there is unintentional and temporary noncompliance with technology based permit effluent limitations because of factors beyond the reasonable control of the Discharger. An upset does not include noncompliance to the extent caused by operational error, improperly designed treatment facilities, inadequate treatment facilities, lack of preventive maintenance, or careless or improper operation. (40 C.F.R. § 122.41(n)(1).)

1. Effect of an upset. An upset constitutes an affirmative defense to an action brought for noncompliance with such technology based permit effluent limitations if the requirements of Standard Provisions – Permit Compliance I.H.2 below are met. No determination made during administrative review of claims that noncompliance was caused by upset, and before an action for noncompliance, is final administrative action subject to judicial review. (40 C.F.R. § 122.41(n)(2).)

2. Conditions necessary for a demonstration of upset. A Discharger who wishes to establish the affirmative defense of upset shall demonstrate, through properly signed, contemporaneous operating logs or other relevant evidence that (40 C.F.R. § 122.41(n)(3)):

   a. An upset occurred and that the Discharger can identify the cause(s) of the upset (40 C.F.R. § 122.41(n)(3)(i));

   b. The permitted facility was, at the time, being properly operated (40 C.F.R. § 122.41(n)(3)(ii));

   c. The Discharger submitted notice of the upset as required in Standard Provisions – Reporting V.E.2.b below (24-hour notice) (40 C.F.R. § 122.41(n)(3)(iii)); and

   d. The Discharger complied with any remedial measures required under Standard Provisions – Permit Compliance I.C above. (40 C.F.R. § 122.41(n)(3)(iv).)

3. Burden of proof. In any enforcement proceeding, the Discharger seeking to establish the occurrence of an upset has the burden of proof. (40 C.F.R. § 122.41(n)(4).)

II. STANDARD PROVISIONS – PERMIT ACTION

A. General

This Order may be modified, revoked and reissued, or terminated for cause. The filing of a request by the Discharger for modification, revocation and reissuance, or termination, or a notification of planned changes or anticipated noncompliance does not stay any Order condition. (40 C.F.R. § 122.41(f).)

B. Duty to Reapply

If the Discharger wishes to continue an activity regulated by this Order after the expiration date of this Order, the Discharger must apply for and obtain a new permit. (40 C.F.R. § 122.41(b).)

C. Transfers

This Order is not transferable to any person except after notice to the Central Valley Water Board. The Central Valley Water Board may require modification or revocation and reissuance of the Order to change the name of the Discharger and incorporate such other requirements as may be necessary under the CWA and the Water Code. (40 C.F.R. § 122.41(l)(3); 122.61.)

III. STANDARD PROVISIONS – MONITORING

A. Samples and measurements taken for the purpose of monitoring shall be representative of the monitored activity. (40 C.F.R. § 122.41(j)(1).)

B. Monitoring results must be conducted according to test procedures approved under 40 C.F.R. part 136 for the analyses of pollutants unless another method is required under 40 C.F.R. subchapters N or O. In the case of pollutants for which there are no approved methods under 40 C.F.R. part 136 or otherwise required under 40 C.F.R. subchapters N or O, monitoring must be conducted according to a test procedure-specified in this Order for such pollutants. (40 C.F.R. § 122.41(j)(4); 122.44(i)(1)(iv).)

IV. STANDARD PROVISIONS – RECORDS

A. Except for records of monitoring information required by this Order related to the Discharger's sewage sludge use and disposal activities, which shall be retained for a period of at least five years (or longer as required by 40 C.F.R. part 503), the Discharger shall retain records of all monitoring information, including all calibration and maintenance records and all original strip chart recordings for continuous monitoring instrumentation, copies of all reports required by this Order, and records of all data used to complete the application for this Order, for a period of at least three (3) years from the date of the sample, measurement, report or application. This period may be extended by request of the Central Valley Water Board Executive Officer at any time. (40 C.F.R. § 122.41(j)(2).)

B. Records of monitoring information shall include:

1. The date, exact place, and time of sampling or measurements (40 C.F.R. § 122.41(j)(3)(i));
2. The individual(s) who performed the sampling or measurements (40 C.F.R. § 122.41(j)(3)(ii));
3. The date(s) analyses were performed (40 C.F.R. § 122.41(j)(3)(iii));
4. The individual(s) who performed the analyses (40 C.F.R. § 122.41(j)(3)(iv));
5. The analytical techniques or methods used (40 C.F.R. § 122.41(j)(3)(v)); and
6. The results of such analyses. (40 C.F.R. § 122.41(j)(3)(vi).)

C. Claims of confidentiality for the following information will be denied (40 C.F.R. § 122.7(b)):

1. The name and address of any permit applicant or Discharger (40 C.F.R. § 122.7(b)(1)); and
2. Permit applications and attachments, permits and effluent data. (40 C.F.R. § 122.7(b)(2).)

V. STANDARD PROVISIONS – REPORTING

A. Duty to Provide Information

The Discharger shall furnish to the Central Valley Water Board, State Water Board, or U.S. EPA within a reasonable time, any information which the Central Valley Water Board, State

Water Board, or U.S. EPA may request to determine whether cause exists for modifying, revoking and reissuing, or terminating this Order or to determine compliance with this Order. Upon request, the Discharger shall also furnish to the Central Valley Water Board, State Water Board, or U.S. EPA copies of records required to be kept by this Order. (40 C.F.R. § 122.41(h); Wat. Code, §§ 13267, 13383.)

B. Signatory and Certification Requirements

1. All applications, reports, or information submitted to the Central Valley Water Board, State Water Board, and/or U.S. EPA shall be signed and certified in accordance with Standard Provisions – Reporting V.B.2, V.B.3, V.B.4, and V.B.5 below. (40 C.F.R. § 122.41(k).)

2. All permit applications shall be signed by either a principal executive officer or ranking elected official. For purposes of this provision, a principal executive officer of a federal agency includes: (i) the chief executive officer of the agency, or (ii) a senior executive officer having responsibility for the overall operations of a principal geographic unit of the agency (e.g., Regional Administrators of U.S. EPA). (40 C.F.R. § 122.22(a)(3).).

3. All reports required by this Order and other information requested by the Central Valley Water Board, State Water Board, or U.S. EPA shall be signed by a person described in Standard Provisions – Reporting V.B.2 above, or by a duly authorized representative of that person. A person is a duly authorized representative only if:

   a. The authorization is made in writing by a person described in Standard Provisions – Reporting V.B.2 above (40 C.F.R. § 122.22(b)(1));

   b. The authorization specifies either an individual or a position having responsibility for the overall operation of the regulated facility or activity such as the position of plant manager, operator of a well or a well field, superintendent, position of equivalent responsibility, or an individual or position having overall responsibility for environmental matters for the company. (A duly authorized representative may thus be either a named individual or any individual occupying a named position.) (40 C.F.R. § 122.22(b)(2)); and

   c. The written authorization is submitted to the Central Valley Water Board and State Water Board. (40 C.F.R. § 122.22(b)(3).)

4. If an authorization under Standard Provisions – Reporting V.B.3 above is no longer accurate because a different individual or position has responsibility for the overall operation of the facility, a new authorization satisfying the requirements of Standard Provisions – Reporting V.B.3 above must be submitted to the Central Valley Water Board and State Water Board prior to or together with any reports, information, or applications, to be signed by an authorized representative. (40 C.F.R. § 122.22(c).)

5. Any person signing a document under Standard Provisions – Reporting V.B.2 or V.B.3 above shall make the following certification:

   "I certify under penalty of law that this document and all attachments were prepared under my direction or supervision in accordance with a system designed to assure that qualified personnel properly gather and evaluate the information submitted. Based on my inquiry of the person or persons who manage the system or those persons directly responsible for gathering the information, the information submitted is, to the best of my knowledge and belief, true, accurate, and complete. I am aware that there are significant penalties for submitting false information, including the possibility of fine and imprisonment for knowing violations." (40 C.F.R. § 122.22(d).)

C. Monitoring Reports

1. Monitoring results shall be reported at the intervals specified in the Monitoring and Reporting Program (Attachment E) in this Order. (40 C.F.R. § 122.41(l)(4).)
2. Monitoring results must be reported on a Discharge Monitoring Report (DMR) form or forms provided or specified by the Central Valley Water Board or State Water Board for reporting results of monitoring of sludge use or disposal practices. (40 C.F.R. § 122.41(l)(4)(i).)
3. If the Discharger monitors any pollutant more frequently than required by this Order using test procedures approved under 40 C.F.R. part 136, or another method required for an industry-specific waste stream under 40 C.F.R. subchapters N or O, the results of such monitoring shall be included in the calculation and reporting of the data submitted in the DMR or sludge reporting form specified by the Central Valley Water Board. (40 C.F.R. § 122.41(l)(4)(ii).)
4. Calculations for all limitations, which require averaging of measurements, shall utilize an arithmetic mean unless otherwise specified in this Order. (40 C.F.R. § 122.41(l)(4)(iii).)

D. Compliance Schedules

Reports of compliance or noncompliance with, or any progress reports on, interim and final requirements contained in any compliance schedule of this Order, shall be submitted no later than 14 days following each schedule date. (40 C.F.R. § 122.41(l)(5).)

E. Twenty-Four Hour Reporting

1. The Discharger shall report any noncompliance that may endanger health or the environment. Any information shall be provided orally within 24 hours from the time the Discharger becomes aware of the circumstances. A written submission shall also be provided within five (5) days of the time the Discharger becomes aware of the circumstances. The written submission shall contain a description of the noncompliance and its cause; the period of noncompliance, including exact dates and times, and if the noncompliance has not been corrected, the anticipated time it is expected to continue; and steps taken or planned to reduce, eliminate, and prevent reoccurrence of the noncompliance. (40 C.F.R. § 122.41(l)(6)(i).)
2. The following shall be included as information that must be reported within 24 hours under this paragraph (40 C.F.R. § 122.41(l)(6)(ii)):
   a. Any unanticipated bypass that exceeds any effluent limitation in this Order. (40 C.F.R. § 122.41(l)(6)(ii)(A).)
   b. Any upset that exceeds any effluent limitation in this Order. (40 C.F.R. § 122.41(l)(6)(ii)(B).)
3. The Central Valley Water Board may waive the above-required written report under this provision on a case-by-case basis if an oral report has been received within 24 hours. (40 C.F.R. § 122.41(l)(6)(iii).)

F. Planned Changes

The Discharger shall give notice to the Central Valley Water Board as soon as possible of any planned physical alterations or additions to the permitted facility. Notice is required under this provision only when (40 C.F.R. § 122.41(l)(1)):

1. The alteration or addition to a permitted facility may meet one of the criteria for determining whether a facility is a new source in section 122.29(b) (40 C.F.R. § 122.41(l)(1)(i)); or

2. The alteration or addition could significantly change the nature or increase the quantity of pollutants discharged. This notification applies to pollutants that are not subject to effluent limitations in this Order. (40 C.F.R. § 122.41(l)(1)(ii).)

   The alteration or addition could significantly change the nature or increase the quantity of pollutants discharged. This notification applies to pollutants that are subject neither to effluent limitations in this Order nor to notification requirements under section 122.42(a)(1) (see Additional Provisions—Notification Levels VII.A.1). (40 C.F.R. § 122.41(l)(1)(ii).)

G. Anticipated Noncompliance

The Discharger shall give advance notice to the Central Valley Water Board or State Water Board of any planned changes in the permitted facility or activity that may result in noncompliance with this Order's requirements. (40 C.F.R. § 122.41(l)(2).)

H. Other Noncompliance

The Discharger shall report all instances of noncompliance not reported under Standard Provisions – Reporting V.C, V.D, and V.E above at the time monitoring reports are submitted. The reports shall contain the information listed in Standard Provision – Reporting V.E above. (40 C.F.R. § 122.41(l)(7).)

I. Other Information

When the Discharger becomes aware that it failed to submit any relevant facts in a permit application, or submitted incorrect information in a permit application or in any report to the Central Valley Water Board**,** State Water Board, or U.S. EPA, the Discharger shall promptly submit such facts or information. (40 C.F.R. § 122.41(l)(8).)

VI. STANDARD PROVISIONS – ENFORCEMENT

A. The Central Valley Water Board is authorized to enforce the terms of this permit under several provisions of the Water Code, including, but not limited to, sections 13385, 13386, and 13387

VII. ADDITIONAL PROVISIONS – NOTIFICATION LEVELS

A. Publicly-Owned Treatment Works (POTW's)

All POTW's shall provide adequate notice to the Central Valley Water Board of the following (40 C.F.R. § 122.42(b)):

1. Any new introduction of pollutants into the POTW from an indirect discharger that would be subject to sections 301 or 306 of the CWA if it were directly discharging those pollutants (40 C.F.R. § 122.42(b)(1)); and
2. Any substantial change in the volume or character of pollutants being introduced into that POTW by a source introducing pollutants into the POTW at the time of adoption of the Order. (40 C.F.R. § 122.42(b)(2).)
3. Adequate notice shall include information on the quality and quantity of effluent introduced into the POTW as well as any anticipated impact of the change on the quantity or quality of effluent to be discharged from the POTW. (40 C.F.R. § 122.42(b)(3).)

ATTACHMENT E – MONITORING AND REPORTING PROGRAM

Contents

I. GENERAL MONITORING PROVISIONS E-2
II. MONITORING LOCATIONS E-3
III. INFLUENT MONITORING REQUIREMENTS E-4
A. MONITORING LOCATION INF-001 ..... E-4
IV. EFFLUENT MONITORING REQUIREMENTS E-4
A. MONITORING LOCATION EFF-001 ..... E-4
V. WHOLE EFFLUENT TOXICITY TESTING REQUIREMENTS E-5
VI. LAND DISCHARGE MONITORING REQUIREMENTS E-8
B. MONITORING LOCATION LND-001 ..... E-8
C. MONITORING LOCATION PND-001 ..... E-9
VII. RECYCLING MONITORING REQUIREMENTS – NOT APPLICABLE E-9
VIII. RECEIVING WATER MONITORING REQUIREMENTS - SURFACE WATER AND GROUNDWATER E-9
A. MONITORING LOCATIONS RSW-001 AND RSW-002 ..... E-9
B. MONITORING LOCATION GW-001, GW-002, GW-003, GWN-001, GWN-002, AND GWN-003 ..... E-10
IX. OTHER MONITORING REQUIREMENTS E-11
A. DEDICATED LAND DISPOSAL AREA E-11
B. BIOSOLIDS E-12
C. MUNICIPAL WATER SUPPLY E-12
D. EFFLUENT AND RECEIVING WATER CHARACTERIZATION (NOVEMBER 2015 – APRIL 2016) E-12
X. REPORTING REQUIREMENTS E-16
A. GENERAL MONITORING AND REPORTING REQUIREMENTS E-16
B. SELF-MONITORING REPORTS (SMRS) E-17
C. DISCHARGE MONITORING REPORTS (DMRS) – NOT APPLICABLE E-20
D. OTHER REPORTS E-20

Tables

TABLE E-1. MONITORING STATION LOCATIONS E-3
TABLE E-2. INFLUENT MONITORING E-4
TABLE E-3. EFFLUENT MONITORING E-4
TABLE E-4. CHRONIC TOXICITY TESTING DILUTION SERIES FOR TRE INVESTIGATION E-6
TABLE E-5. LAND DISCHARGE MONITORING REQUIREMENTS E-8
TABLE E-6. POND D MONITORING REQUIREMENTS E-9
TABLE E-7. RECEIVING WATER MONITORING REQUIREMENTS E-9
TABLE E-8. GROUNDWATER MONITORING REQUIREMENTS E-10
TABLE E-9. DEDICATED LAND DISPOSAL AREA MONITORING REQUIREMENTS. E-11
TABLE E-10. MUNICIPAL WATER SUPPLY MONITORING REQUIREMENTS E-12
TABLE E-11. EFFLUENT AND RECEIVING WATER CHARACTERIZATION MONITORING E-13
TABLE E-12. MONITORING PERIODS AND REPORTING SCHEDULE E-17

ATTACHMENT E – MONITORING AND REPORTING PROGRAM (MRP)

The Code of Federal Regulations (40 C.F.R. § 122.48) requires that all NPDES permits specify monitoring and reporting requirements. Water Code sections 13267 and 13383 also authorize the Central Valley Water Board to require technical and monitoring reports. This MRP establishes monitoring and reporting requirements that implement federal and California regulations.

I. GENERAL MONITORING PROVISIONS

A. Samples and measurements taken as required herein shall be representative of the volume and nature of the monitored discharge. All samples shall be taken at the monitoring locations specified below and, unless otherwise specified, before the monitored flow joins or is diluted by any other waste stream, body of water, or substance. Monitoring locations shall not be changed without notification to and the approval of the Central Valley Water Board.

B. Effluent samples shall be taken downstream of the last addition of wastes to the treatment or discharge works where a representative sample may be obtained prior to mixing with the receiving waters. Samples shall be collected at such a point and in such a manner to ensure a representative sample of the discharge.

C. Chemical, bacteriological, and bioassay analyses of any material required by this Order shall be conducted by a laboratory certified for such analyses by the Department of Public Health (DPH). Laboratories that perform sample analyses must be identified in all monitoring reports submitted to the Central Valley Water Board. In the event a certified laboratory is not available to the Discharger for any onsite field measurements such as pH, DO, turbidity, temperature, and residual chlorine, such analyses performed by a noncertified laboratory will be accepted provided a Quality Assurance-Quality Control Program is instituted by the laboratory. A manual containing the steps followed in this program for any onsite field measurements such as pH, DO, turbidity, temperature, and residual chlorine must be kept onsite in the treatment facility laboratory and shall be available for inspection by Central Valley Water Board staff. The Discharger must demonstrate sufficient capability (qualified and trained employees, properly calibrated and maintained field instruments, etc.) to adequately perform these field measurements. The Quality Assurance-Quality Control Program must conform to USEPA guidelines or to procedures approved by the Central Valley Water Board.

D. Appropriate flow measurement devices and methods consistent with accepted scientific practices shall be selected and used to ensure the accuracy and reliability of measurements of the volume of monitored discharges. All monitoring instruments and devices used by the Discharger to fulfill the prescribed monitoring program shall be properly maintained and calibrated as necessary, at least yearly, to ensure their continued accuracy. All flow measurement devices shall be calibrated at least once per year to ensure continued accuracy of the devices.

E. Monitoring results, including noncompliance, shall be reported at intervals and in a manner specified in this Monitoring and Reporting Program.

F. Laboratories analyzing monitoring samples shall be certified by the Department of Public Health (DPH), in accordance with the provision of Water Code section 13176, and must include quality assurance/quality control data with their reports.

G. The Discharger shall file with the Central Valley Water Board technical reports on self-monitoring performed according to the detailed specifications contained in this Monitoring and Reporting Program.

H. The results of all monitoring required by this Order shall be reported to the Central Valley Water Board, and shall be submitted in such a format as to allow direct comparison with the

limitations and requirements of this Order. Unless otherwise specified, discharge flows shall be reported in terms of the monthly average and the daily maximum discharge flows.

II. MONITORING LOCATIONS

The Discharger shall establish the following monitoring locations to demonstrate compliance with the effluent limitations, discharge specifications, and other requirements in this Order:

Table E-1. Monitoring Station Locations

Discharge Point Name	Monitoring Location Name	Monitoring Location Description
--	INF-001	A location where a representative sample of the influent into the Facility can be collected.
001	EFF-001	Downstream from the last connection through which wastes can be admitted into the outfall to the North Fork Calaveras River. Latitude: 38° 12' 39" N Longitude: 120° 42' 20" W
--	FIL-001	A location where a representative sample of effluent leaving the filtrations system can be collected.
--	LND-001	A location where a representative sample of the effluent sent to the effluent storage area (Pond D) can be collected.
--	LND-001T	A location where a representative sample of the effluent being sent from Pond D to the Designated Land Disposal Area (DLDA).
--	LND-002	A location where a representative sample of the effluent being sent to Ponds B and C.
--	PND-001	A location where a representative sample of the contents of Storage Pond D can be collected.
--	RSW-001	100 feet upstream from the point of discharge in the North Fork Calaveras River. Latitude: 38° 12' 39" N Longitude: 120° 42' 18" W
	RSW-002	250 feet downstream from the point of discharge in the North Fork Calaveras River. Latitude: 38° 12' 39" N Longitude: 120° 42' 23" W
--	GW-001	Groundwater monitoring well (background).
--	GW-002	Groundwater monitoring well.
--	GW-003	Groundwater monitoring well.
--	GWN-001	Groundwater monitoring well on the Neilson Property (background).
--	GWN-002	Groundwater monitoring well on the Neilson Property.
--	GWN-003	Groundwater monitoring well on the Neilson Property.
--	BIO-001	A location where a representative sample of biosolids can be obtained.
--	SPL-001	A location where a representative sample of the municipal water supply can be obtained.

The North latitude and West longitude information in Table E-1 are approximate for administrative purposes.

III. INFLUENT MONITORING REQUIREMENTS

A. Monitoring Location INF-001

1. The Discharger shall monitor influent to the facility at INF-001 as follows:

Table E-2. Influent Monitoring

Parameter	Units	Sample Type	Minimum Sampling Frequency [1]	Required Analytical Test Method
Flow	MGD	Meter	Continuous	--
BOD 5-day @ 20°C	mg/L	24-hr Composite	1/Week	[2]
Total Suspended Solids	mg/L	24-hr Composite	1/Week	[2]
Electrical Conductivity @ 25°C	µmhos/cm	Grab [3, 4]	1/Quarter	[2]
Total Dissolved Solids	mg/L	Grab [3]	1/Quarter	[2]

[1] When discharging to the North Fork Calaveras River, influent samples shall be collected at approximately the same time as effluent samples. Influent monitoring shall be conducted regardless of whether the discharge is to land or surface waters.

[2] Pollutants shall be analyzed using the analytical methods described in 40 CFR Part 136; or by methods approved by the Central Valley Water Board or the State Water Board.

[3] Grab samples shall not be collected at the same time each day to get a complete representation of variations in the influent.

[4] A hand-held field monitor may be used, provided the meter utilizes as USEPA-approved algorithm/method and is calibrated and maintained in accordance with the manufacturer's instructions. A calibration and maintenance log for each meter used for monitoring required by this Monitoring and Reporting Program shall be maintained at the Facility.

IV. EFFLUENT MONITORING REQUIREMENTS

A. Monitoring Location EFF-001

1. When discharging to the North Fork Calaveras River, the Discharger shall monitor the treated wastewater at EFF-001 as follows. If more than one analytical test method is listed for a given parameter, the Discharger must select from the listed methods and corresponding Minimum Level:

Table E-3. Effluent Monitoring

Parameter	Units	Sample Type	Minimum Sampling Frequency	Required Analytical Test Method
Flow	MGD	Meter	Continuous	[1]
Conventional Pollutants				
Biochemical Oxygen Demand (BOD) (5-day @ 20 Deg. C)	mg/L	24-hr Composite	1/Week	[1]
	lbs/day	Calculate	1/Week	--
Total Suspended Solids	mg/L	24-hr Composite	1/Week	[1]
	lbs/day	Calculate	1/Week	--
pH	Standard Units	Grab [3]	1/Day [2,3]	[1]
Priority Pollutants				
Cyanide, Total (as CN)	µg/L	Grab	1/Month	[1, 4]
Non-Conventional Pollutants				

Parameter	Units	Sample Type	Minimum Sampling Frequency	Required Analytical Test Method
Flow	MGD	Meter	Continuous	[1]
Ammonia Nitrogen, Total (as N)	mg/L	Grab	1/Week [2, 6]	[1]
Chlorine, Total Residual	mg/L	Meter	Continuous	[1, 5]
Electrical Conductivity @ 25°C	µmhos/cm	Grab	1/Week	[1]
Hardness (as $CaCO_3$)	mg/L	Grab	1/Month	[1]
Temperature	°C	Grab [3]	1/Day [2]	[1]
Total Coliform Organisms	MPN/100 mL	Grab	1/Week [7]	[1]
Total Dissolved Solids	mg/L	Grab	1/Month	[1]
Turbidity	NTU	Meter [8]	1/Day	[1]

1. Pollutants shall be analyzed using the analytical methods described in 40 CFR Part 136 or by methods approved by the Central Valley Water Board or the State Water Board.
2. pH and temperature shall be recorded at the time of ammonia sample collection.
3. A hand-held field meter may be used, provided the meter utilizes a USEPA-approved algorithm/method and is calibrated and maintained in accordance with the manufacturer's instructions. A calibration and maintenance log for each meter used for monitoring required by this Monitoring and Reporting Program shall be maintained at the Facility.
4. For priority pollutant constituents the reporting level shall be consistent with Sections 2.4.2 and 2.4.3 of the Policy for Implementation of Toxics Standards for Inland Surface Waters, Enclosed Bays, and Estuaries of California (See Attachment E, Table E-13.)
5. Total chlorine residual must be monitored with a method sensitive to and accurate at the permitted level of 0.01 mg/L.
6. Concurrent with whole effluent toxicity monitoring.
7. Samples for total coliform organisms may be collected at any point following disinfection.
8. Turbidity to be monitored immediately after the filters at FIL-001.

V. WHOLE EFFLUENT TOXICITY TESTING REQUIREMENTS

A. Acute Toxicity Testing. The Discharger shall conduct acute toxicity testing to determine whether the effluent is contributing acute toxicity to the receiving water. The Discharger shall meet the following acute toxicity testing requirements:

1. *Monitoring Frequency* – The Discharger shall perform acute toxicity testing twice per surface water discharge season (1 November through 30 April), concurrent with effluent ammonia sampling.
2. *Sample Types* – The Discharger may use flow-through or static renewal testing. For static renewal testing, the samples shall be grab samples and shall be representative of the volume and quality of the discharge. The effluent samples shall be taken at the effluent monitoring location EFF-001.
3. *Test Species* – Test species shall be fathead minnows (*Pimephales promelas*).
4. *Methods* – The acute toxicity testing samples shall be analyzed using EPA-821-R-02-012, Fifth Edition. Temperature, total residual chlorine, and pH shall be recorded at the

time of sample collection. No pH adjustment may be made unless approved by the Executive Officer.

5. *Test Failure* – If an acute toxicity test does not meet all test acceptability criteria, as specified in the test method, the Discharger must re-sample and re-test as soon as possible, not to exceed 7 days following notification of test failure.

B. Chronic Toxicity Testing. The Discharger shall conduct three species chronic toxicity testing to determine whether the effluent is contributing chronic toxicity to the receiving water. The Discharger shall meet the following chronic toxicity testing requirements:

1. *Monitoring Frequency* – The Discharger shall perform three species chronic toxicity testing once during every discharge season (1 November through 30 April).

2. *Sample Types* – Effluent samples shall be grab samples and shall be representative of the volume and quality of the discharge. The effluent samples shall be taken at the effluent monitoring location EFF-001 as specified in the Monitoring and Reporting Program. The receiving water control shall be a grab sample obtained from the RSW-001 sampling location, as identified in this Monitoring and Reporting Program.

3. *Sample Volumes* – Adequate sample volumes shall be collected to provide renewal water to complete the test in the event that the discharge is intermittent.

4. *Test Species* – Chronic toxicity testing measures sublethal (e.g., reduced growth, reproduction) and/or lethal effects to test organisms exposed to an effluent compared to that of the control organisms. The Discharger shall conduct chronic toxicity tests with:

   a. The cladoceran, water flea, *Ceriodaphnia dubia* (survival and reproduction test);

   b. The fathead minnow, *Pimephales promelas* (larval survival and growth test); and

   c. The green alga, *Selenastrum capricornutum* (growth test).

5. Methods – The presence of chronic toxicity shall be estimated as specified in Short-term Methods for Estimating the Chronic Toxicity of Effluents and Receiving Waters to Freshwater Organisms, Fourth Edition, EPA/821-R-02-013, October 2002.

6. Reference Toxicant – As required by the SIP, all chronic toxicity tests shall be conducted with concurrent testing with a reference toxicant and shall be reported with the chronic toxicity test results.

7. *Dilutions* – For routine and accelerated chronic toxicity monitoring, it is not necessary to perform the test using a dilution series. The test may be performed using 25% effluent and one control. For TRE monitoring, the chronic toxicity testing shall be performed using the dilution series identified in Table E-4, below, unless an alternative dilution series is detailed in the submitted TRE Action Plan. A receiving water control or laboratory water control may be used as the diluent.

Table E-4. Chronic Toxicity Testing Dilution Series for TRE Investigation

Sample	Dilutions[a] (%)					Control
	100	75	50	25	12.5	
% Effluent	100	75	50	25	12.5	0
% Control Water	0	25	50	75	87.5	100

[a] Receiving water control or laboratory water control may be used as the diluent.

8. *Test Failure* – The Discharger must re-sample and re-test as soon as possible, but no later than fourteen (14) days after receiving notification of a test failure. A test failure is defined as follows:

   a. The reference toxicant test or the effluent test does not meet all test acceptability criteria as specified in the Short-term Methods for Estimating the Chronic Toxicity of Effluents and Receiving Waters to Freshwater Organisms, Fourth Edition, EPA/821-R-02-013, October 2002 (Method Manual), and its subsequent amendments or revisions; or

   b. The percent minimum significant difference (PMSD) measured for the test exceeds the upper PMSD bound variability criterion in Table 6 on page 52 of the Method Manual. (A retest is only required in this case if the test results do not exceed the monitoring trigger specified in the Special Provision at section VI. 2.a.iii. of the Order.)

C. WET Testing Notification Requirements. The Discharger shall notify the Central Valley Water Board within 24-hours after the receipt of test results exceeding the monitoring trigger during regular or accelerated monitoring, or an exceedance of the acute toxicity effluent limitation.

D. WET Testing Reporting Requirements. All toxicity test reports shall include the contracting laboratory's complete report provided to the Discharger and shall be in accordance with the appropriate "Report Preparation and Test Review" sections of the method manuals. At a minimum, whole effluent toxicity monitoring shall be reported as follows:

1. **Chronic WET Reporting.** Regular chronic toxicity monitoring results shall be reported to the Central Valley Water Board within 30 days following completion of the test, and shall contain, at minimum:

   a. The results expressed in TUc, measured as 100/NOEC, and also measured as 100/LC50, 100/EC25, 100/IC25, and 100/IC50, as appropriate.

   b. The statistical methods used to calculate endpoints;

   c. The statistical output page, which includes the calculation of the percent minimum significant difference (PMSD);

   d. The dates of sample collection and initiation of each toxicity test; and

   e. The results compared to the numeric toxicity monitoring trigger.

   Additionally, the monthly discharger self-monitoring reports shall contain an updated chronology of chronic toxicity test results expressed in TUc, and organized by test species, type of test (survival, growth or reproduction), and monitoring frequency, i.e., either quarterly, monthly, accelerated, or Toxicity Reduction Evaluation (TRE).

2. **Acute WET Reporting.** Acute toxicity test results shall be submitted with the monthly discharger self-monitoring reports and reported as percent survival.

3. **TRE Reporting.** Reports for TREs shall be submitted in accordance with the schedule contained in the Discharger's approved TRE Work plan, or as amended by the Discharger's TRE Action Plan.

4. **Quality Assurance (QA).** The Discharger must provide the following information for QA purposes:

a. Results of the applicable reference toxicant data with the statistical output page giving the species, NOEC, LOEC, type of toxicant, dilution water used, concentrations used, PMSD, and dates tested.

b. The reference toxicant control charts for each endpoint, which include summaries of reference toxicant tests performed by the contracting laboratory.

c. Any information on deviations or problems encountered and how they were dealt with.

VI. LAND DISCHARGE MONITORING REQUIREMENTS

A. Monitoring Location LND-001 and LND -002

1. The Discharger shall monitor effluent discharged to Pond D, measured at LND-001, as follows:

Table E-5. Land Discharge Monitoring Requirements

Parameter	Units	Sample Type	Minimum Sampling Frequency	Required Analytical Test Method
Flow to Pond D	MGD	Meter	Continuous	--
Flow to Spray Fields	MGD	Meter	1/Day	--
Conventional Pollutants				
Biochemical Oxygen Demand (5-Day @ 25° C)	mg/L	24-Hour Composite	1/Week	[1]
Non-Conventional Pollutants				
Electrical Conductivity @ 25° C	µmhos/cm	Grab	1/Week	[1]
Total Coliform Organisms	MPN/100mL	Grab	1/Week	[1]

[1] Pollutants shall be analyzed using the analytical methods described in 40 CFR Part 136 or by methods approved by the Central Valley Water Board or the State Water Board.

2. The Discharger shall monitor wastewater discharged to Ponds B and C, measured at LND-002, as follows:

a. The Discharger shall keep a log related to the use of Ponds B and C. In particular the Discharger shall record the following when any type of wastewater is directed Ponds B and C;

- The date(s) when the wastewater is directed to Ponds B and/or C;
- The type(s) of wastewater (e.g., secondary or tertiary treated) directed to Ponds B and/or C;
- The total volume of wastewater directed to Ponds B and/or C;
- The freeboard available in Ponds B and C.

b. The log for Ponds B and C shall be submitted with the monthly self-monitoring reports required in Section X.B of the Monitoring and Reporting Program (Attachment E).

B. Monitoring Location PND-001

1. The Discharger shall monitor the contents of Storage Pond D at PND-001 as follows:

Table E-6. Pond D Monitoring Requirements

Parameter	Units	Sample Type	Minimum Sampling Frequency	Required Analytical Test Method
Freeboard	feet	Measurement	1/Month	
Conventional Pollutants				
pH	standard units	Grab	1/Month	[1]
Non-Conventional Pollutants				
Dissolved Oxygen	mg/L	Grab	1/Month	
Electrical Conductivity @ 25°C	µmhos/cm	Grab	1/Quarter	[1]
Nitrate Nitrogen, Total (as N)	mg/L	Grab	1/Quarter	[1]
Standard Minerals [2]	mg/L	Grab	1/Year	[1]
Total Dissolved Solids	mg/L	Grab	1/Quarter	[1]

1. Pollutants shall be analyzed using the analytical methods described in 40 CFR Part 136 or by methods approved by the Central Valley Water Board or the State Water Board.
2. Standard minerals shall include the following: boron, calcium, iron, magnesium, potassium, sodium, chloride, manganese, phosphorus, total alkalinity (including alkalinity series), and hardness, and include verification that the analysis is complete (i.e., cation/anion balance).

VII. RECYCLING MONITORING REQUIREMENTS – NOT APPLICABLE

VIII. RECEIVING WATER MONITORING REQUIREMENTS - SURFACE WATER AND GROUNDWATER

A. Monitoring Locations RSW-001 and RSW-002

1. When discharging to the North Fork Calaveras River, the Discharger shall monitor the North Fork Calaveras River at RSW-001 and RSW-002 as follows:

Table E-7. Receiving Water Monitoring Requirements

Parameter	Units	Sample Type	Minimum Sampling Frequency	Required Analytical Test Method
Flow [1]	MGD	Meter	1/Day	--
Dilution Factor	River Flow / Effluent Flow	Calculate	1/Day	--
Conventional Pollutants				
pH	standard units	Grab[2]	1/Week	[3]
Non-Conventional Pollutants				
Dissolved Oxygen	mg/L	Grab[2]	1/Week	[3]
Electrical Conductivity @ 25° C	µmhos/cm	Grab[2]	1/Month	[3]
Hardness (as $CaCO_3$)	mg/L	Grab	1/Month	[3]

Parameter	Units	Sample Type	Minimum Sampling Frequency	Required Analytical Test Method
Temperature	°F	Grab[2]	1/Week	[3]
Turbidity	NTU	Grab	1/Week	[3]

1. Monitoring required at Monitoring Location RSW-001 only.
2. A hand-held field meter may be used, provided the meter utilizes a USEPA-approved algorithm/method and is calibrated and maintained in accordance with the manufacturer's instructions. A calibration and maintenance log for each meter used for monitoring required by this Monitoring and Reporting Program shall be maintained at the Facility.
3. Pollutants shall be analyzed using the analytical methods described in 40 CFR Part 136.

2. In conducting the receiving water sampling, a log shall be kept of the receiving water conditions throughout the reach bounded by RSW-001 and RSW-002 when discharging to the North Fork Calaveras River. Attention shall be given to the presence of:
   a. Floating or suspended matter;
   b. Discoloration;
   c. Bottom deposits;
   d. Aquatic life;
   e. Visible films, sheens, or coatings;
   f. Fungi, slimes, or objectionable growths; and
   g. Potential nuisance conditions.

   Notes on receiving water conditions shall be summarized in the monitoring report.

B. Monitoring Location GW-001, GW-002, GW-003, GWN-001, GWN-002, and GWN-003

1. Prior to construction and/or beginning a sampling program of any new groundwater monitoring wells, the Discharger shall submit plans and specifications to the Central Valley Water Board for approval. Once installed, all new wells shall be added to the monitoring network (which currently consists of Monitoring Well Nos. GW-001, GW-002, GW-003, GWN-001, GWN-002, and GWN-003) and shall be sampled and analyzed according to the schedule below. All samples shall be collected using approved EPA methods. Water table elevations shall be calculated to determine groundwater gradient and direction of flow.
2. Prior to sampling, the groundwater elevations shall be measured and the wells shall be purged of at least three well volumes until temperature, pH, and electrical conductivity have stabilized. Depth to groundwater shall be measured to the nearest 0.01 feet. Groundwater monitoring at GW-001, GW-002, GW-003, GWN-001, GWN-002, and GWN-003, and any new groundwater monitoring wells shall include, at a minimum, the following:

Table E-8. Groundwater Monitoring Requirements

Parameter	Units	Sample Type	Minimum Sampling Frequency	Required Analytical Test Method
Groundwater Elevation [1]	±0.01 feet	Calculated	1/Quarter	--
Conventional Pollutants				

Parameter	Units	Sample Type	Minimum Sampling Frequency	Required Analytical Test Method
pH	standard units	Grab	1/Quarter	[2]
Non-Conventional Pollutants				
Electrical Conductivity @ 25°C	µmhos/cm	Grab	1/Quarter	[2]
Nitrate Nitrogen, Total (as N)	mg/L	Grab	1/Quarter	[2]
Standard Minerals [3]	mg/L	Grab	1/Year	[2]
Total Coliform Organisms	MPN/100 mL	Grab	1/Quarter	[2]
Total Dissolved Solids	mg/L	Grab	1/Quarter	[2]

1. Groundwater elevation shall be determined based on depth-to-water measurements from a surveyed measuring point elevation on the well. The groundwater elevation shall be used to calculate the direction and gradient of groundwater flow, which must be reported.
2. Pollutants shall be analyzed using the analytical methods described in 40 CFR Part 136 or by methods approved by the Central Valley Water Board or the State Water Board.
3. Standard minerals shall include the following: boron, calcium, iron, magnesium, potassium, sodium, chloride, manganese, phosphorus, total alkalinity (including alkalinity series), and hardness, and include verification that the analysis is complete (i.e., cation/anion balance).

IX. OTHER MONITORING REQUIREMENTS

A. Dedicated Land Disposal Area

1. Monitoring of the DLDA shall be conducted as described in Table E-9 when the disposal areas are used, and the results shall be included in the monthly monitoring report. Evidence of erosion, field saturation, irrigation runoff, or the presence of nuisance conditions shall be noted in the report. Effluent monitoring results shall be used in calculations to determine loading rates at the DLDA. Monitoring of the DLDA shall include the following:

Table E-9. Dedicated Land Disposal Area Monitoring Requirements.

Parameter	Units	Sample Type	Minimum Sampling Frequency	Required Analytical Test Method
Flow to each DLDA	Gallons	Continuous	Daily	Monthly
Acreage Applied	Acres	Calculated	Daily	Monthly
Water Application Rate	Inches/day	Calculated	Daily	Monthly
Rainfall [1]	Inches	Observation	Daily	Monthly
Total Nitrogen Loading Rate	lbs/ac/month	Calculated	Monthly	Monthly
DLDA Berm Condition	NA	Observation	Weekly	Monthly

[1] Rainfall data collected from the weather station that is nearest to the DLDA or a properly maintained on-site rain gauge.

At least **once per week** when the DLDA is being used, the DLDA shall be inspected to identify any equipment malfunction or other circumstances that might allow irrigation runoff to leave the irrigation area and/or create ponding conditions that violate the Waste Discharge Requirements contained in this Order. A daily log of each inspection shall be kept at the Facility and be submitted with the monthly monitoring reports. Photocopies

of entries into an operator's field log are acceptable. If the DLDA is not used, then the monthly monitoring reports shall state so.

B. Biosolids

1. Monitoring Location BIO-001

   a. A composite sample of sludge shall be collected annually at Monitoring Location BIO-001 in accordance with EPA's *POTW Sludge Sampling and Analysis Guidance Document*, August 1989, and tested for priority pollutants listed in 40 CFR Part 122, Appendix D, Tables II and III (excluding total phenols).

   b. Biosolids monitoring shall be conducted using the methods in Test Methods for Evaluating Solid Waste, Physical/Chemical methods (EPA publication SW-846), as required in 40 CFR 503.8(b)(4). All results must be reported on a 100% dry weight basis. Records of all analyses must state on each page of the laboratory report whether the results are expressed in "100% dry weight" or "as is."

   c. Sampling records shall be retained for a minimum of **5 years**. A log shall be maintained of sludge quantities generated and of handling and disposal activities. The frequency of entries is discretionary; however, the log must be complete enough to serve as a basis for part of the annual report.

C. Municipal Water Supply

1. Monitoring Location SPL-001

   a. The Discharger shall monitor the municipal water supply at SPL-001 as follows. A sampling station shall be established where a representative sample of the municipal water supply can be obtained. Municipal water supply samples shall be collected at approximately the same time as effluent samples.

Table E-10. Municipal Water Supply Monitoring Requirements

Parameter	Units	Sample Type	Minimum Sampling Frequency	Required Analytical Test Method
Electrical Conductivity @ 25°C[1]	µmhos/cm	Grab	1/Quarter	
Total Dissolved Solids[1]	mg/L	Grab	1/Quarter	
Standard Minerals[2]	mg/L	Grab	1/Year	

[1] If the water supply is from more than one source, the total dissolved solids and electrical conductivity shall be reported as a weighted average and include copies of supporting calculations.

[2] Standard minerals shall include all major cations and anions and include verification that the analysis is complete (i.e., cation/anion balance).

D. Effluent and Receiving Water Characterization (November 2015 – April 2016)

1. **Monitoring**. Samples shall be collected from the effluent and upstream receiving water (EFF-001 and RSW-001) and analyzed for the constituents listed in Table E-11, below. Monitoring shall be conducted when discharging to surface water during the November 2015 – April 2016[1] discharge season (2 consecutive samples, approximately evenly

[1] If North Fork Calaveras River flows are not sufficient to allow a surface water discharge to occur for a sufficient period to conduct the required sampling, the Discharger may submit a request for Executive Officer

distributed throughout the discharge season, once discharge begins) and the results of such monitoring shall be submitted to the Central Valley Water Board with the monthly self-monitoring reports. Each individual monitoring event shall provide representative sample results for the effluent and upstream receiving water.

2. **Concurrent Sampling.** Effluent and receiving water sampling shall be performed at approximately the same time, on the same date.

3. **Sample Type.** All receiving water samples shall be taken as grab samples. Effluent samples shall be taken as described in **Table E-11**, below.

Table E-11. Effluent and Receiving Water Characterization Monitoring

Parameter	Units	Effluent Sample Type	Maximum Reporting Level[1]
2- Chloroethyl vinyl ether	µg/L	Grab	1
Acrolein	µg/L	Grab	2
Acrylonitrile	µg/L	Grab	2
Benzene	µg/L	Grab	0.5
Bromoform	µg/L	Grab	0.5
Carbon Tetrachloride	µg/L	Grab	0.5
Chlorobenzene	µg/L	Grab	0.5
Chloroethane	µg/L	Grab	0.5
Chloroform	µg/L	Grab	2
Chloromethane	µg/L	Grab	2
Dibromochloromethane	µg/L	Grab	0.5
Dichlorobromomethane	µg/L	Grab	0.5
Dichloromethane	µg/L	Grab	2
Ethylbenzene	µg/L	Grab	2
Hexachlorobenzene	µg/L	Grab	1
Hexachlorobutadiene	µg/L	Grab	1
Hexachloroethane	µg/L	Grab	1
Methyl bromide (Bromomethane)	µg/L	Grab	1
Naphthalene	µg/L	Grab	10
Parachlorometa cresol	µg/L	Grab	
Tetrachloroethene	µg/L	Grab	0.5
Toluene	µg/L	Grab	2
trans-1,2-Dichloroethylene	µg/L	Grab	1
Trichloroethene	µg/L	Grab	2
Vinyl chloride	µg/L	Grab	0.5
Methyl-tert-butyl ether (MTBE)	µg/L	Grab	
Trichlorofluoromethane	µg/L	Grab	
1,1,1-Trichloroethane	µg/L	Grab	0.5
1,1-dichloroethane	µg/L	Grab	0.5
1,1-dichloroethylene	µg/L	Grab	0.5
1,2-dichloropropane	µg/L	Grab	0.5
1,3-dichloropropylene	µg/L	Grab	0.5
1,1,2,2-tetrachloroethane	µg/L	Grab	0.5
1,1,2-Trichloro-1,2,2-Trifluoroethane	µg/L	Grab	0.5
1,2,4-trichlorobenzene	µg/L	Grab	1
1,2-dichoroethane	µg/L	Grab	0.5

approval to conduct this monitoring during a subsequent surface water discharge season.

Parameter	Units	Effluent Sample Type	Maximum Reporting Level[1]
1,2-dichlorobenzene	µg/L	Grab	0.5
1,3-dichlorobenzene	µg/L	Grab	0.5
1,4-dichlorobenzene	µg/L	Grab	0.5
Styrene	µg/L	Grab	
Xylenes	µg/L	Grab	
1,2-Benzanthracene	µg/L	Grab	5
1,2-Diphenylhydrazine	µg/L	Grab	1
2-Chlorophenol	µg/L	Grab	5
2,4-Dichlorophenol	µg/L	Grab	5
2,4-Dimethylphenol	µg/L	Grab	2
2,4-Dinitrophenol	µg/L	Grab	5
2,4-Dinitrotoluene	µg/L	Grab	5
2,4,6-Trichlorophenol	µg/L	Grab	10
2,6-Dinitrotoluene	µg/L	Grab	5
2-Nitrophenol	µg/L	Grab	10
2-Chloronaphthalene	µg/L	Grab	10
3,3'-Dichlorobenzidine	µg/L	Grab	5
3,4-Benzofluoranthene	µg/L	Grab	10
4-Chloro-3-methylphenol	µg/L	Grab	5
4,6-Dinitro-2-methylphenol	µg/L	Grab	10
4-Nitrophenol	µg/L	Grab	10
4-Bromophenyl phenyl ether	µg/L	Grab	10
4-Chlorophenyl phenyl ether	µg/L	Grab	5
Acenaphthene	µg/L	Grab	1
Acenaphthylene	µg/L	Grab	10
Anthracene	µg/L	Grab	10
Benzidine	µg/L	Grab	5
Benzo(a)pyrene (3,4-Benzopyrene)	µg/L	Grab	2
Benzo(g,h,i)perylene	µg/L	Grab	5
Benzo(k)fluoranthene	µg/L	Grab	2
Bis(2-chloroethoxy) methane	µg/L	Grab	5
Bis(2-chloroethyl) ether	µg/L	Grab	1
Bis(2-chloroisopropyl) ether	µg/L	Grab	10
Bis(2-ethylhexyl) phthalate	µg/L	Grab	5
Butyl benzyl phthalate	µg/L	Grab	10
Chrysene	µg/L	Grab	5
Di-n-butylphthalate	µg/L	Grab	10
Di-n-octylphthalate	µg/L	Grab	10
Dibenzo(a,h)-anthracene	µg/L	Grab	0.1
Diethyl phthalate	µg/L	Grab	10
Dimethyl phthalate	µg/L	Grab	10
Fluoranthene	µg/L	Grab	10
Fluorene	µg/L	Grab	10
Hexachlorocyclopentadiene	µg/L	Grab	5
Indeno(1,2,3-c,d)pyrene	µg/L	Grab	0.05
Isophorone	µg/L	Grab	1
N-Nitrosodiphenylamine	µg/L	Grab	1
N-Nitrosodimethylamine	µg/L	Grab	5
N-Nitrosodi-n-propylamine	µg/L	Grab	5

Parameter	Units	Effluent Sample Type	Maximum Reporting Level[1]
Nitrobenzene	µg/L	Grab	10
Pentachlorophenol	µg/L	Grab	1
Phenanthrene	µg/L	Grab	5
Phenol	µg/L	Grab	1
Pyrene	µg/L	Grab	10
Aluminum	µg/L	24-hr Composite	
Antimony	µg/L	24-hr Composite	5
Arsenic	µg/L	24-hr Composite	10
Asbestos	µg/L	24-hr Composite	
Barium	µg/L	24-hr Composite	
Beryllium	µg/L	24-hr Composite	2
Cadmium	µg/L	24-hr Composite	0.5
Chromium (III)	µg/L	24-hr Composite	50
Chromium (VI)	µg/L	24-hr Composite	10
Copper	µg/L	24-hr Composite	0.5
Fluoride	µg/L	24-hr Composite	
Iron	µg/L	24-hr Composite	
Lead	µg/L	24-hr Composite	0.5
Mercury	µg/L	Grab	0.5
Manganese	µg/L	24-hr Composite	
Molybdenum	µg/L	24-hr Composite	
Nickel	µg/L	24-hr Composite	20
Selenium	µg/L	24-hr Composite	5
Silver	µg/L	24-hr Composite	0.25
Thallium	µg/L	24-hr Composite	1
Tributyltin	µg/L	24-hr Composite	
Zinc	µg/L	24-hr Composite	20
4,4'-DDD	µg/L	24-hr Composite	0.05
4,4'-DDE	µg/L	24-hr Composite	0.05
4,4'-DDT	µg/L	24-hr Composite	0.01
alpha-Endosulfan	µg/L	24-hr Composite	0.02
alpha-Hexachlorocyclohexane (BHC)	µg/L	24-hr Composite	0.01
Alachlor	µg/L	24-hr Composite	
Aldrin	µg/L	24-hr Composite	0.005
beta-Endosulfan	µg/L	24-hr Composite	0.01
beta-Hexachlorocyclohexane	µg/L	24-hr Composite	0.005
Chlordane	µg/L	24-hr Composite	0.1
delta-Hexachlorocyclohexane	µg/L	24-hr Composite	0.005
Dieldrin	µg/L	24-hr Composite	0.01
Diuron	µg/L	24-hr Composite	0.05
Endosulfan sulfate	µg/L	Grab	0.01
Endrin	µg/L	Grab	0.01
Endrin Aldehyde	µg/L	Grab	0.01
Heptachlor	µg/L	Grab	0.01
Heptachlor Epoxide	µg/L	Grab	0.02
Lindane (gamma-Hexachlorocyclohexane)	µg/L	Grab	0.5
PCB-1016	µg/L	Grab	0.5
PCB-1221	µg/L	Grab	0.5
PCB-1232	µg/L	Grab	0.5

Parameter	Units	Effluent Sample Type	Maximum Reporting Level[1]
PCB-1242	µg/L	Grab	0.5
PCB-1248	µg/L	Grab	0.5
PCB-1254	µg/L	Grab	0.5
PCB-1260	µg/L	Grab	0.5
Toxaphene	µg/L	Grab	
Atrazine	µg/L	Grab	
Bentazon	µg/L	Grab	
Carbofuran	µg/L	Grab	
2,4-D	µg/L	Grab	
Dalapon	µg/L	Grab	
1,2-Dibromo-3-chloropropane (DBCP)	µg/L	Grab	
Di(2-ethylhexyl)adipate	µg/L	Grab	
Dinoseb	µg/L	Grab	
Diquat	µg/L	Grab	
Endothal	µg/L	Grab	
Ethylene Dibromide	µg/L	Grab	
Methoxychlor	µg/L	Grab	
Molinate (Ordram)	µg/L	Grab	
Oxamyl	µg/L	Grab	
Picloram	µg/L	Grab	
Simazine (Princep)	µg/L	Grab	
Thiobencarb	µg/L	Grab	
2,3,7,8-TCDD (Dioxin)	µg/L	Grab	
2,4,5-TP (Silvex)	µg/L	Grab	
Diazinon	µg/L	Grab	
Chlorpyrifos	µg/L	Grab	
Ammonia (as N)	mg/L	Grab	
Boron	µg/L	24-hr Composite	
Chloride	mg/L	24-hr Composite	
Foaming Agents (MBAS)	µg/L	24-hr Composite	
Mercury, Methyl	ng/L	Grab	
Phosphorus, Total (as P)	mg/L	24-hr Composite	
Sulfate	mg/L	24-hr Composite	
Sulfide (as S)	mg/L	Grab	
Sulfite (as SO_3)	mg/L	Grab	
Total Dissolved Solids (TDS)	mg/L	24-hr Composite	

[1] The reporting levels required in this table for priority pollutant constituents are established based on Section 2.4.2 and Appendix 4 of the SIP.

X. REPORTING REQUIREMENTS

A. General Monitoring and Reporting Requirements

1. The Discharger shall comply with all Standard Provisions (Attachment D) related to monitoring, reporting, and recordkeeping.

2. Upon written request of the Central Valley Water Board, the Discharger shall submit a summary monitoring report. The report shall contain both tabular and graphical summaries of the monitoring data obtained during the previous year(s).

3. **Compliance Time Schedules.** For compliance time schedules included in the Order, the Discharger shall submit to the Central Valley Water Board, on or before each

compliance due date, the specified document or a written report detailing compliance or noncompliance with the specific date and task. If noncompliance is reported, the Discharger shall state the reasons for noncompliance and include an estimate of the date when the Discharger will be in compliance. The Discharger shall notify the Central Valley Water Board by letter when it returns to compliance with the compliance time schedule.

4. The Discharger shall report to the Central Valley Water Board any toxic chemical release data it reports to the State Emergency Response Commission within 15 days of reporting the data to the Commission pursuant to section 313 of the "*Emergency Planning and Community Right to Know Act*" of 1986.

B. Self-Monitoring Reports (SMRs)

1. The Discharger shall electronically submit SMRs using the State Water Board's California Integrated Water Quality System (CIWQS) Program Web site (http://www.waterboards.ca.gov/ciwqs/index.html). The CIWQS Web site will provide additional information for SMR submittal in the event there will be a planned service interruption for electronic submittal.

2. The Discharger shall report in the SMR the results for all monitoring specified in this MRP under sections III through IX. The Discharger shall submit monthly SMRs including the results of all required monitoring using U.S. EPA-approved test methods or other test methods specified in this Order. SMRs are to include all new monitoring results obtained since the last SMR was submitted. If the Discharger monitors any pollutant more frequently than required by this Order, the results of this monitoring shall be included in the calculations and reporting of the data submitted in the SMR.

3. Monitoring periods and reporting for all required monitoring shall be completed according to the following schedule:

Table E-12. Monitoring Periods and Reporting Schedule

Sampling Frequency	Monitoring Period Begins On…	Monitoring Period	SMR Due Date
Continuous	Permit effective date	All	Submit with monthly SMR
Daily	Permit effective date	(Midnight through 11:59 PM) or any 24-hour period that reasonably represents a calendar day for purposes of sampling.	Submit with monthly SMR
Weekly	Permit effective date	Sunday through Saturday	Submit with monthly SMR
Monthly	Permit effective date	1st day of calendar month through last day of calendar month	First day of second calendar month following month of sampling
Quarterly	Permit effective date	January 1 through March 31 April 1 through June 30 July 1 through September 30 October 1 through December 31	1 May 1 August 1 November 1 February of following year
Annually	Permit effective date	January 1 through December 31	1 February of following year

Sampling Frequency	Monitoring Period Begins On…	Monitoring Period	SMR Due Date
1 / Season	Permit effective date	November 1 through April 30	1 June

4. **Reporting Protocols.** The Discharger shall report with each sample result the applicable Reporting Level (RL) and the current laboratory's Method Detection Limit (MDL), as determined by the procedure in 40 C.F.R. part 136.

   The Discharger shall report the results of analytical determinations for the presence of chemical constituents in a sample using the following reporting protocols:

   a. Sample results greater than or equal to the RL shall be reported as measured by the laboratory (i.e., the measured chemical concentration in the sample).

   b. Sample results less than the RL, but greater than or equal to the laboratory's MDL, shall be reported as "Detected, but Not Quantified," or DNQ. The estimated chemical concentration of the sample shall also be reported.

      For the purposes of data collection, the laboratory shall write the estimated chemical concentration next to DNQ. The laboratory may, if such information is available, include numerical estimates of the data quality for the reported result. Numerical estimates of data quality may be percent accuracy (± a percentage of the reported value), numerical ranges (low to high), or any other means considered appropriate by the laboratory.

   c. Sample results less than the laboratory's MDL shall be reported as "Not Detected," or ND.

   d. Dischargers are to instruct laboratories to establish calibration standards so that the Minimum Level (ML) value (or its equivalent if there is differential treatment of samples relative to calibration standards) is the lowest calibration standard. At no time is the Discharger to use analytical data derived from extrapolation beyond the lowest point of the calibration curve.

5. **Multiple Sample Data.** When determining compliance with an AMEL, AWEL, or MDEL for priority pollutants and more than one sample result is available, the Discharger shall compute the arithmetic mean unless the data set contains one or more reported determinations of "Detected, but Not Quantified" (DNQ) or "Not Detected" (ND). In those cases, the Discharger shall compute the median in place of the arithmetic mean in accordance with the following procedure:

   a. The data set shall be ranked from low to high, ranking the reported ND determinations lowest, DNQ determinations next, followed by quantified values (if any). The order of the individual ND or DNQ determinations is unimportant.

   b. The median value of the data set shall be determined. If the data set has an odd number of data points, then the median is the middle value. If the data set has an even number of data points, then the median is the average of the two values around the middle unless one or both of the points are ND or DNQ, in which case the median value shall be the lower of the two data points where DNQ is lower than a value and ND is lower than DNQ.

6. The Discharger shall submit SMRs in accordance with the following requirements:

a. The Discharger shall arrange all reported data in a tabular format. The data shall be summarized to clearly illustrate whether the facility is operating in compliance with interim and/or final effluent limitations. The Discharger is not required to duplicate the submittal of data that is entered in a tabular format within CIWQS. When electronic submittal of data is required and CIWQS does not provide for entry into a tabular format within the system, the Discharger shall electronically submit the data in a tabular format as an attachment.

b. The Discharger shall attach a cover letter to the SMR. The information contained in the cover letter shall clearly identify violations of the WDR's; discuss corrective actions taken or planned; and the proposed time schedule for corrective actions. Identified violations must include a description of the requirement that was violated and a description of the violation.

7. The Discharger shall submit in the SMRs calculations and reports in accordance with the following requirements:

a. **Surface Water Discharge Season Average Effluent Limitations**. For constituents with effluent limitations specified as "Surface Water Discharge Season Average" (electrical conductivity) the Discharger shall report the surface water discharge season average in the April SMR. The surface water discharge season average shall be calculated as the average of the samples gathered for the surface water discharge season (i.e., 1 November – 30 April).

b. **Mass Loading Limitations**. For BOD_5, TSS, and ammonia, the Discharger shall calculate and report the mass loading (lbs/day) in the SMRs. The mass loading shall be calculated as follows:

Mass Loading (lbs/day) = Flow (MGD) x Concentration (mg/L) x 8.34

When calculating daily mass loading, the daily average flow and constituent concentration shall be used. For weekly average mass loading, the weekly average flow and constituent concentration shall be used. For monthly average mass loading, the monthly average flow and constituent concentration shall be used.

c. **Removal Efficiency (BOD_5 and TSS).** The Discharger shall calculate and report the percent removal of BOD5 and TSS in the SMRs. The percent removal shall be calculated as specified in Section VII.A. of the Limitations and Discharge Requirements.

d. **Total Coliform Organisms Effluent Limitations**. The Discharger shall calculate and report the 7-day median of total coliform organisms for the effluent. The 7 day median of total coliform organisms shall be calculated as specified in Section VII.C. of the Limitations and Discharge Requirements.

e. **Dissolved Oxygen Receiving Water Limitations**. The Discharger shall calculate and report monthly in the self-monitoring report: i) the dissolved oxygen concentration, ii) the percent of saturation at the in the main water mass, and iii) the 95th percentile dissolved oxygen concentration.

f. **Turbidity Receiving Water Limitations**. The Discharger shall calculate and report the turbidity increase in the receiving water applicable to the natural turbidity condition specified in Section V.A.17.a-e. of the Limitations and Discharge Requirements.

g. **Temperature Receiving Water Limitations**. The Discharger shall calculate and report the temperature increase in the receiving water based on the difference in temperature at RSW-001 and RSW-002.

8. The Discharger shall submit in the SMRs calculations and reports for groundwater monitoring in accordance with the following requirements:

   a. A narrative description of all preparatory, monitoring, sampling, and analytical testing activities for the groundwater monitoring. The narrative shall be sufficiently detailed to verify compliance with this Order. The narrative shall be supported by field logs for each well documenting depth to groundwater; parameters measured before, during, and after purging; method of purging; calculation of casing volume; and total volume of water purged;

   b. Calculation of groundwater elevations, determination of groundwater flow direction and gradient on the date of measurement, comparison of previous flow direction and gradient data, and discussion of seasonal trends if any;

   c. A narrative discussion of the analytical results for all groundwater locations monitored including spatial and temporal tends, with reference to summary data tables, graphs, and appended analytical reports (as applicable);

   d. A comparison of the monitoring data to the groundwater limitations and an explanation of any violation of those requirements;

   e. Summary data tables and graphs of historical and current water table elevations and analytical results;

   f. A scaled map showing relevant structures and features of the facility, the locations of monitoring wells and any other sampling stations, and groundwater elevation contours referenced to mean sea level datum; and

   g. Copies of laboratory analytical report(s) for groundwater monitoring.

C. Discharge Monitoring Reports (DMRs) – Not Applicable

D. Other Reports

1. The Discharger shall report the results of any special studies, acute and chronic toxicity testing, TRE/TIE required by Special Provisions – VI.C.2.a.. The Discharger shall report the progress in satisfaction of compliance schedule dates specified in Special Provisions – VI.C.7. The Discharger shall submit reports with the first monthly SMR scheduled to be submitted on or immediately following the report due date.

2. **Within 60 days of permit adoption**, the Discharger shall submit a report outlining reporting levels (RL's), method detection limits, and analytical methods for approval. The Discharger shall comply with the monitoring and reporting requirements for CTR constituents as outlined in section 2.3 and 2.4 of the SIP. The maximum required reporting levels for priority pollutant constituents shall be based on the Minimum Levels (ML's) contained in Appendix 4 of the SIP, determined in accordance with Section 2.4.2 and Section 2.4.3 of the SIP. In accordance with Section 2.4.2 of the SIP, when there is more than one ML value for a given substance, the Central Valley Water Board shall include as RL's, in the permit, all ML values, and their associated analytical methods, listed in Appendix 4 that are below the calculated effluent limitation. The Discharger may select any one of those cited analytical methods for compliance determination. If no ML value is below the effluent limitation, then the Central Valley Water Board shall select as the RL, the lowest ML value, and its associated analytical method, listed in Appendix 4

for inclusion in the permit. Table E-11 (Attachment E) provides required maximum reporting levels in accordance with the SIP.

3. **Annual Operations Report.** By 30 January of each year, the Discharger shall submit a written report to the Executive Officer containing the following:

   a. The names, certificate grades, and general responsibilities of all persons employed at the Facility.

   b. The names and telephone numbers of persons to contact regarding the plant for emergency and routine situations.

   c. A statement certifying when the flow meter(s) and other monitoring instruments and devices were last calibrated, including identification of who performed the calibration.

   d. A statement certifying whether the current operation and maintenance manual, and contingency plan, reflect the wastewater treatment plant as currently constructed and operated, and the dates when these documents were last revised and last reviewed for adequacy.

   e. The Discharger may also be requested to submit an annual report to the Central Valley Water Board with both tabular and graphical summaries of the monitoring data obtained during the previous year. Any such request shall be made in writing. The report shall discuss the compliance record. If violations have occurred, the report shall also discuss the corrective actions taken and planned to bring the discharge into full compliance with the waste discharge requirements.

ATTACHMENT F – FACT SHEET

Contents

I. PERMIT INFORMATION F-3
II. FACILITY DESCRIPTION F-4
A. DESCRIPTION OF WASTEWATER AND BIOSOLIDS TREATMENT AND CONTROLS F-4
B. DISCHARGE POINTS AND RECEIVING WATERS F-6
C. SUMMARY OF EXISTING REQUIREMENTS AND SELF-MONITORING REPORT (SMR) DATA F-6
D. COMPLIANCE SUMMARY F-8
E. PLANNED CHANGES F-8
III. APPLICABLE PLANS, POLICIES, AND REGULATIONS F-9
A. LEGAL AUTHORITIES F-9
B. CALIFORNIA ENVIRONMENTAL QUALITY ACT (CEQA) F-9
C. STATE AND FEDERAL LAWS, REGULATIONS, POLICIES, AND PLANS F-9
D. IMPAIRED WATER BODIES ON CWA 303(D) LIST F-11
E. OTHER PLANS, POLICES AND REGULATIONS F-12
IV. RATIONALE FOR EFFLUENT LIMITATIONS AND DISCHARGE SPECIFICATIONS F-13
A. DISCHARGE PROHIBITIONS F-14
B. TECHNOLOGY-BASED EFFLUENT LIMITATIONS F-15
1. SCOPE AND AUTHORITY F-15
2. APPLICABLE TECHNOLOGY-BASED EFFLUENT LIMITATIONS F-16
C. WATER QUALITY-BASED EFFLUENT LIMITATIONS (WQBEL'S) F-16
1. SCOPE AND AUTHORITY F-16
2. APPLICABLE BENEFICIAL USES AND WATER QUALITY CRITERIA AND OBJECTIVES F-17
3. DETERMINING THE NEED FOR WQBEL'S F-25
4. WQBEL CALCULATIONS F-41
5. WHOLE EFFLUENT TOXICITY (WET) F-43
D. FINAL EFFLUENT LIMITATION CONSIDERATIONS F-45
1. MASS-BASED EFFLUENT LIMITATIONS F-45
2. AVERAGING PERIODS FOR EFFLUENT LIMITATIONS F-45
3. SATISFACTION OF ANTI-BACKSLIDING REQUIREMENTS F-46
4. ANTIDEGRADATION POLICIES F-50
5. STRINGENCY OF REQUIREMENTS FOR INDIVIDUAL POLLUTANTS F-51
E. INTERIM EFFLUENT LIMITATIONS – NOT APPLICABLE F-53
F. LAND DISCHARGE SPECIFICATIONS F-53
G. RECYCLING SPECIFICATIONS – NOT APPLICABLE F-53
V. RATIONALE FOR RECEIVING WATER LIMITATIONS F-53
A. SURFACE WATER F-53
B. GROUNDWATER F-53
VI. RATIONALE FOR PROVISIONS F-54
A. STANDARD PROVISIONS F-54
B. SPECIAL PROVISIONS F-54
1. REOPENER PROVISIONS F-54
2. SPECIAL STUDIES AND ADDITIONAL MONITORING REQUIREMENTS F-56
3. BEST MANAGEMENT PRACTICES AND POLLUTION PREVENTION F-59
4. CONSTRUCTION, OPERATION, AND MAINTENANCE SPECIFICATIONS F-60
5. SPECIAL PROVISIONS FOR MUNICIPAL FACILITIES (POTW'S ONLY) F-60

6. OTHER SPECIAL PROVISIONS – NOT APPLICABLE F-61
7. COMPLIANCE SCHEDULES – NOT APPLICABLE F-61
VII. RATIONALE FOR MONITORING AND REPORTING REQUIREMENTS F-61
A. INFLUENT MONITORING F-61
B. EFFLUENT MONITORING F-61
C. WHOLE EFFLUENT TOXICITY TESTING REQUIREMENTS F-62
D. RECEIVING WATER MONITORING F-62
1. SURFACE WATER F-62
2. GROUNDWATER F-62
E. OTHER MONITORING REQUIREMENTS F-63
VIII. PUBLIC PARTICIPATION F-63
A. NOTIFICATION OF INTERESTED PARTIES F-64
B. WRITTEN COMMENTS F-64
C. PUBLIC HEARING F-64
D. RECONSIDERATION OF WASTE DISCHARGE REQUIREMENTS F-64
E. INFORMATION AND COPYING F-64
F. REGISTER OF INTERESTED PERSONS F-65
G. ADDITIONAL INFORMATION F-65

Tables

TABLE F-1. FACILITY INFORMATION F-3
TABLE F-2. HISTORIC EFFLUENT LIMITATIONS AND MONITORING DATA (EFF-001) F-6
TABLE F-3. HISTORIC EFFLUENT LIMITATIONS AND MONITORING DATA (LND-001) F-8
TABLE F-4. BASIN PLAN BENEFICIAL USES F-9
TABLE F-5. 303 (D) LIST FOR NEW HOGAN RESERVOIR. F-12
TABLE F-6. SUMMARY OF TECHNOLOGY-BASED EFFLUENT LIMITATIONS F-16
TABLE F-7. ZINC ECA EVALUATION F-22
TABLE F-8. LEAD ECA EVALUATION F-24
TABLE F-9. SUMMARY OF ECA EVALUATIONS FOR CTR HARDNESS-DEPENDENT METALS F-25
TABLE F-10. TOTAL RECOVERABLE COPPER RPA F-30
TABLE F-11. TOTAL RECOVERABLE ZINC RPA F-33
TABLE F-12: SUMMARY OF PERSISTENT CHLORINATED HYDROCARBON PESTICIDES DETECTED IN EFFLUENT. F-34
TABLE F-13 SUMMARY OF WATER QUALITY-BASED EFFLUENT LIMITATIONS F-43
TABLE F-14. WHOLE EFFLUENT CHRONIC TOXICITY TESTING RESULTS F-44
TABLE F-15. SUMMARY OF FINAL EFFLUENT LIMITATIONS F-52

ATTACHMENT F – FACT SHEET

As described in section II.B of this Order, the Central Valley Water Board incorporates this Fact Sheet as findings of the Central Valley Water Board supporting the issuance of this Order. This Fact Sheet includes the legal requirements and technical rationale that serve as the basis for the requirements of this Order.

This Order has been prepared under a standardized format to accommodate a broad range of discharge requirements for Dischargers in California. Only those sections or subsections of this Order that are specifically identified as “not applicable” have been determined not to apply to this Discharger. Sections or subsections of this Order not specifically identified as “not applicable” are fully applicable to this Discharger.

I. PERMIT INFORMATION

The following table summarizes administrative information related to the facility.

Table F-1. Facility Information

WDID	5B050103001
Discharger	San Andreas Sanitary District
Name of Facility	Wastewater Treatment Plant
Facility Address	675 Gold Oak Road
	San Andreas, CA 95249
	Calaveras County
Facility Contact, Title and Phone	Nancy Baxley, District Manager, (209) 754-3281
Authorized Person to Sign and Submit Reports	Garret Walker, Legally Responsible Official, (209) 754-3281
Mailing Address	P.O. Box 1630 San Andreas, CA 95249
Billing Address	Same as mailing address
Type of Facility	Publicly Owned Treatment Works (POTW)
Major or Minor Facility	Minor
Threat to Water Quality	1
Complexity	A
Pretreatment Program	Not Applicable
Recycling Requirements	Not Applicable
Facility Permitted Flow	1.5 million gallons per day (MGD)
Facility Design Flow	0.4 MGD (average dry weather flow); 1.9 MGD (peak wet weather flow)
Watershed	Upper Calaveras Watershed
Receiving Water	North Fork Calaveras River
Receiving Water Type	Inland surface water

A. San Andreas Sanitary District (hereinafter Discharger) is the owner and operator of the San Andreas Sanitary District Wastewater Treatment Plant (hereinafter Facility), a Publicly Owned Treatment Works (POTW).

For the purposes of this Order, references to the "discharger" or "permittee" in applicable federal and state laws, regulations, plans, or policy are held to be equivalent to references to the Discharger herein.

B. The Facility discharges wastewater to the North Fork Calaveras River, a water of the United States, tributary to New Hogan Reservoir within Upper Calaveras Watershed. The Discharger was previously regulated by Order R5-2009-0007 and National Pollutant Discharge Elimination System (NPDES) Permit No. CA0079464 adopted on 5 February 2009 and expired on 1 February 2014. Attachment B provides a map of the area around the Facility. Attachment C provides a flow schematic of the Facility.

Prior to making any change in the point of discharge, place of use, or purpose of use of treated wastewater that results in a decrease of flow in any portion of a watercourse, the Discharger must file a petition with the State Water Board, Division of Water Rights, and receive approval for such a change. The State Water Board retains the jurisdictional authority to enforce such requirements under Water Code section 1211.

C. The Discharger filed a report of waste discharge and submitted an application for reissuance of its WDR's and NPDES permit on 2 August 2013. The application was deemed complete on 30 December 2013. A site visit was conducted on 27 January 2014, to observe operations and collect additional data to develop permit limitations and requirements for waste discharge.

D. This Order was amended by Order R5-2016-0067 on 19 August 2016 to modify the Effluent and Receiving Water Characterization Study monitoring requirements and the Storage Pond and DLDA Operation Requirements.

II. FACILITY DESCRIPTION

The Discharger provides sewerage service for the community of San Andreas and serves a population of approximately 2200, and has no industrial users. The design daily average flow capacity of the Facility is 0.32 million gallons per day (MGD) and the peak flow is 1.9 MGD.

A. Description of Wastewater and Biosolids Treatment and Controls

The treatment system consists of a grit removal chamber, mechanical bar screen (for solids removal), pH control chemical feed, primary clarification, trickling filtration, intermediate secondary clarification, extended aeration activated sludge processing, final clarification, cloth media filtration, chlorination, dechlorination, filter press, sludge drying beds, two stormwater storage ponds, and a six million gallon storage reservoir (Pond D). As part of a compliance project to meet effluent limits for ammonia, copper, zinc, and cyanide, the Discharger completed upgrades to the Facility in December 2010 to include a nitrifying activated sludge process and tertiary filtration. A new sludge drying pad was installed in 2013 in response to complaints of excessive odor. Extended aeration activated sludge was added to the existing trickling filter plant to reduce ammonia concentrations (i.e., achieve nitrification), and cloth media filtration (including coagulation and flocculation) was added to provide equivalent tertiary treatment. The treatment system was designed to handle a peak flow of 1.9 MGD, in order to reduce the use of the High Flow Treatment System (HFTS), which handles flows in excess 1.9 MGD. As is typical for foothill communities, handling peak flows due to I&I is an issue. During these peak influent flows, all flows up to 1.9 MGD receive full tertiary treatment and the flows exceeding 1.9 MGD are diverted to the HFTS after screening, chlorinated, and sent directly to Pond D. The contents of Pond D can then be returned to the beginning of the system to be retreated and properly discharged when conditions permit.

Disposal of treated wastewater is accomplished solely by land application from 1 May through 31 October of each year. Treated wastewater leaving the treatment system is held in the unlined effluent storage pond, Pond D, prior to the final discharge to the dedicated land disposal area (DLDA). The DLDA vegetation primarily consists of native trees, brush, and grasses. Historically the Discharger's land application practices consisted of applying treated wastewater to a 32 acre network of disposal trenches dug into the hillsides of the property and following the existing topography, supplemented by sprinkler application. However, because the disposal trenches were excavated down to the bedrock, which is shallow throughout the area, prompted concerns of possible degradation to the groundwater underlying the DLDA. The primary concern of degradation to groundwater was that the lack of soil in the trenches was not providing any advanced soil treatment to the effluent being disposed of. Therefore, the disposal trenches were decommissioned and backfilled in 2013. In addition to the 70 acre parcel of land housing the Facility and existing DLDA, the Discharger owns a 113 acre parcel of land adjacent to the existing DLDA that was intended to be used for future expansion of the existing DLDA, thereby increasing the disposal capacity of the Facility. The Discharger's previous WDR's did not recognize the Neilson Property as part of the Discharger's DLDA, and contained a discharge prohibition for the Neilson Property until a time when the Discharger submitted a simple anti-degradation analysis to the Central Valley Water Board for approval by the Executive Officer. In an effort to find a suitable replacement for the decommissioned disposal trenches and perform the anti-degradation analysis required by the Central Valley Water Board, the Discharger constructed a "demonstration of concept" sprinkler irrigation system covering the existing DLDA and the Neilson Property. The temporary sprinkler system consisted of 43 fixed large-bore sprinklers and 5 portable points of connection, each capable of applying water at rates of 50 to 80 gallons per minute. The Discharger conducted an analysis of the capabilities of spray irrigation to meet the disposal needs of the Facility. The Discharger submitted an antidegradation analysis for the Neilson Property and a 1-in-100 Year Season Water Balance to the Central Valley Water Board on 10 April 2014. The antidegradation analysis for the Neilson Property and the 1-in-100 Year Season Water Balance concluded that the sprinkler disposal system, dispersed across approximately 30 acres (seen in red in Figure B-1 in Attachment B) of the DLDA (with the ability to be expanded to other parts of the Neilson Property as seen in blue in Figure B-2 in Attachment B), will be sufficient to meet the effluent storage and disposal needs of the Facility at times that conditions in the North Fork Calaveras River do not provide sufficient dilution to facilitate surface water discharge, and that the expansion of the DLDA would not further degrade the quality of the groundwater existing beneath the site. Therefore, Central Valley Water Board staff has concluded that it is acceptable to include the Neilson Property in the permitted DLDA in this Order.

The primary method of effluent disposal is by spray irrigation to land. However, the previous Order (R5-2009-0007) permits the Discharger to seasonally (1 November through 30 April) discharge treated wastewater, when there exists a dilution ratio of 20:1 (receiving water to effluent), to the North Fork Calaveras River, a water of the United States, and a tributary to the New Hogan Reservoir. The outfall to the North Fork Calaveras River consists of a 48' cross stream diffuser directly upstream of a concrete ford.

The Discharger treats primary sludge by means of digestion in the heated unmixed anaerobic digester, it is then dewatering using the belt filter press. Secondary clarification produces waste activated sludge (WAS), which is sent directly to the belt filter press without further treatment. Dewatered sludge is transported to the asphalt lined drying pad where, in summer months, the biosolids are spread out to air dry for a minimum of 90 days in order to meet Class B pathogen reduction requirements in 40 CFR 503. The Discharger currently has a contract with Synagro, a sustainable facilities management and environmental services provider, for biosolids removal. Synagro typically removes biosolids from the Facility once per

year, biosolids are applied to land by Synagro within six hours of removal in order to achieve adequate vector attraction reduction. Runoff from the biosolids drying bed is sent to the process feed station to be introduced into the treatment train for treatment.

Storm water from the paved portion of the Facility is collected in Ponds B and C, where it either evaporates or is conveyed to Pond D and discharged to land in the DLDA. Storm water from the non-paved portion of the Facility does not get collected but is conveyed to San Andreas Creek through a system of storm water collection ditches. Ponds B and C also accept tertiary or secondary wastewater during periods of operational maintenance (e.g., chlorine contact basin maintenance). All wastewater is chlorinated prior to discharge to the ponds.

B. Discharge Points and Receiving Waters

1. The Facility is located in Section 18, T4N, R12E, MDB&M, as shown in Attachment B, a part of this Order.
2. Treated municipal wastewater is discharged at Discharge Point No. 001 to the North Fork Calaveras River, a water of the United States and a tributary to the New Hogan Reservoir at a point latitude 38° 12’ 39” N and longitude 120° 42’ 20” W.
3. Treated municipal wastewater is discharged to the DLDA through the use of spray irrigation. See Attachment B for a map of the DLDA.

C. Summary of Existing Requirements and Self-Monitoring Report (SMR) Data

Effluent limitations contained in the existing Order for discharges from EFF-001 (Monitoring Location EFF-001) and representative monitoring data from the term of the previous Order are as follows:

Table F-2. Historic Effluent Limitations and Monitoring Data (EFF-001)

Parameter	Units	Effluent Limitation			Monitoring Data December 2010 to April 2013[1]		
		Average Monthly	Average Weekly	Maximum Daily	Highest Average Monthly Discharge	Highest Average Weekly Discharge	Highest Daily Discharge
Flow	MGD	--	--	1.5	--	--	1.1
Biochemical Oxygen Demand (5-day @ 20°C)	mg/L	30	45	60	5.5	8.9	8.9
	lbs/day[2]	375	563	751	20.8	37	37
pH	standard units	--	--	6.5 - 8.5[3]	--	--	6.4 – 8.3[3]
Total Suspended Solids (TSS)	mg/L	30	45	60	5	6.0	6.0
	lbs/day[2]	375	563	751	12	75.06	75.06
Bis (2-ethylhexyl) phthalate	µg/L	34	--	95	1.1	--	1.1
Chlordane	µg/L	--	--	ND[4,5]	--	--	ND[5]
Copper, Total Recoverable	µg/L	5.4	--	7.9	15	--	15

Parameter	Units	Effluent Limitation			Monitoring Data December 2010 to April 2013[1]		
		Average Monthly	Average Weekly	Maximum Daily	Highest Average Monthly Discharge	Highest Average Weekly Discharge	Highest Daily Discharge
Cyanide, Total (as CN)	µg/L	4.3	--	8.5	11	--	11
Dichlorobromomethane	µg/L	9.7	--	22	4	--	4
Zinc, Total Recoverable	µg/L	48	--	77	164	--	177
Ammonia Nitrogen, Total (as N)	mg/L	1.2	--	2.1	0.25	--	0.21
	lbs/day[1]	15	--	26	1.9	--	2.8
Diazinon	µg/L	0.03	--	0.08	ND	--	ND
	lbs/day[1]	0.0004	--	0.001	0.364	--	0.364
Settleable Solids	ml/L	0.1	--	0.2	ND[5]	--	ND[5]
Total Residual Chlorine	mg/L		0.011[6]	0.019[7]			
Total Coliform Organisms	MPN/100 ml		23[8]	240[9]			
Iron, Total Recoverable	µg/L	300[10]			70[10]		
Electrical Conductivity (@ 25° C)	µmhos/ cm	(Mun. sup.+500)[10] or 700[10]			677[10]		

1. Date range represents effluent quality after tertiary filtration is implemented at the Facility.
2. Based on permitted flow of 1.5 MGD.
3. Instantaneous minimum and maximum.
4. Instantaneous maximum.
5. ND indicates non-detect. See section VII.D for the protocol for evaluating compliance with the ND effluent limitation.
6. As a 4-day average.
7. As a 1-hour average.
8. As a 7-day median.
9. More than once in a 30-day period.
10. As an annual average in a calendar year.

Land discharge specifications contained in the existing Order for discharges to the DLDA (Monitoring Location LND-001) and representative monitoring data from the term of the previous Order are as follows:

Table F-3. Historic Effluent Limitations and Monitoring Data (LND-001)

Parameter	Units	Effluent Limitation			Monitoring Data December 2010 to April 2013[1]		
		Average Monthly	Monthly Median	Maximum Daily	Highest Average Monthly Discharge	Highest Monthly Median Discharge	Highest Daily Discharge
Biochemical Oxygen Demand (5-day @ 20°C)	mg/L	40	--	80	8.8	--	16
Settleable Solids	ml/L	0.2	--	0.5	ND[2]	--	ND[2]
Total Coliform Organisms	MPN/100 ml	--	23	230		3	6.8

1. Date range represents effluent quality after tertiary filtration is implemented at the Facility.
2. ND indicates non-detect. See section VII.D for the protocol for evaluating compliance with the ND effluent limitation.

D. Compliance Summary

The Discharger was issued an Administrative Civil Liability (ACL) order for the years of 2009 and 2010, assessing a total of $87,000 for 29 effluent violations. Of the 29 effluent violations cited in the ACL, 12 effluent violations were of Order R5-2003-0151 for aluminum, copper, and zinc, while 17 effluent violations were of Order R5-2009-0007 for BOD, chlorine residual, pH, settleable solids, and TSS. All of the violations cited in the ACL occurred prior to the Facility upgrades completed in December 2010.The Discharger settled the ACL by completion of compliance projects.

E. Planned Changes

The Discharger completed upgrades to the Facility in 2010, at that time it was thought that is would be possible to comingle the primary sludge and WAS from secondary clarification in the existing anaerobic digester. However, the anaerobic digester and its heating system are too small to accommodate the treatment of both primary sludge and WAS. The inadequacy of the digestion system for the comingling of primary and WAS led to the overloading of the digester system and subsequent digester upsets. Therefore, the practice of combining primary sludge and WAS for digestion has been halted and WAS is now sent directly to the belt press for dewatering. Since WAS is not treated prior to dewatering and drying, it produces a significant amount of odor when it is piled or spread on the Facility's drying pad. The Discharger is in the process of upgrading the solids handling facilities but has not yet decided on the most feasible plan of action, nor has the Discharger procured funding for the proposed upgrades. The Discharger is currently considering multiple options to upgrade the solids handling facilities to have the capacity to be able to treat both primary sludge and WAS prior to drying.

The Discharger is currently considering options and feasibility to expand the DLDA on the Neilson Property to maximize land disposal and/or effluent reclamation to the extent practicable. Expansion of the DLDA is also being considered in conjunction with the feasibility of expanding treated effluent storage in Pond D or construction of new effluent storage on the Neilson Property. A timeline for these upgrades has not yet been established.

III. APPLICABLE PLANS, POLICIES, AND REGULATIONS

The requirements contained in this Order are based on the requirements and authorities described in this section.

A. Legal Authorities

This Order serves as WDR's pursuant to article 4, chapter 4, division 7 of the California Water Code (commencing with section 13260). This Order is also issued pursuant to section 402 of the federal Clean Water Act (CWA) and implementing regulations adopted by the U.S. EPA and chapter 5.5, division 7 of the Water Code (commencing with section 13370). It shall serve as an NPDES permit for point source discharges from this facility to surface waters.

B. California Environmental Quality Act (CEQA)

Under Water Code section 13389, this action to adopt an NPDES permit is exempt from the provisions of Chapter 3 of CEQA, (commencing with section 21100) of Division 13 of the Public Resources Code.

C. State and Federal Laws, Regulations, Policies, and Plans

1. **Water Quality Control Plan.** Requirements of this Order specifically implement the applicable Water Quality Control Plans.

   a. Basin Plan. The Central Valley Water Board adopted a Water Quality Control Plan for the Water Quality Control Plan, Fourth Edition (Revised October 2011), for the Sacramento and San Joaquin River Basins (hereinafter Basin Plan) that designates beneficial uses, establishes water quality objectives, and contains implementation programs and policies to achieve those objectives for all waters addressed through the plan. Table II-1 of the Basin Plan identifies the following existing beneficial uses for the Calaveras River from the source to New Hogan Reservoir: water contact recreation, including canoeing and rafting; non-contact water recreation, including aesthetic enjoyment; war freshwater habitat; cold freshwater habitat; warm migration of aquatic organisms; warm and cold spawning, reproduction, and/or early development; and wildlife habitat. Requirements in this Order implement the Basin Plan.

   Beneficial uses applicable to the North Fork Calaveras River are as follows:

Table F-4. Basin Plan Beneficial Uses

Discharge Point	Receiving Water Name	Beneficial Use(s)
001	**North Fork Calaveras River**	Existing: Water contact recreation (REC-1); non-contact water recreation (REC-2); warm freshwater habitat (WARM); cold freshwater habitat (COLD)'migration of aquatic organisms (MIGR); spawning, reproduction, and/or early development (SPWN); and wildlife habitat (WILD).

The Basin Plan does not apply the MUN and AGR beneficial uses to the North Fork Calaveras River which is contained in the surface water body of "Source to New Hogan Reservoir". The previous Order (R5-2009-1117) applied the MUN and AGR beneficial uses to the North Fork Calaveras River, citing State Water Board Resolution 88-63 as justification for the application of the beneficial uses not listed in the Basin Plan.

However, Resolution 88-63 is not applicable to water bodies specifically identified in Table II-1 of the Basin Plan and changing designated beneficial uses for a water body must be carried out through a Basin Plan amendment, not through a permitting action. Therefore, the previous application of MUN and AGR beneficial uses to the North Fork Calaveras River were incorrect. The MUN and AGR beneficial uses are not applied to the North Fork Calaveras River in this Order.

2. **National Toxics Rule (NTR) and California Toxics Rule (CTR).** U.S. EPA adopted the NTR on 22 December 1992, and later amended it on 4 May 1995 and 9 November 1999. About forty criteria in the NTR applied in California. On 18 May 2000, U.S. EPA adopted the CTR. The CTR promulgated new toxics criteria for California and, in addition, incorporated the previously adopted NTR criteria that were applicable in the state. The CTR was amended on 13 February 2001. These rules contain federal water quality criteria for priority pollutants.

3. **State Implementation Policy.** Federal regulation 40 C.F.R. section 131.12 requires that the state water quality standards include an antidegradation policy consistent with the federal policy. The State Water Board established California's antidegradation policy in State Water Board Resolution 68-16 ("Statement of Policy with Respect to Maintaining High Quality of Waters in California"). Resolution 68-16 is deemed to incorporate the federal antidegradation policy where the federal policy applies under federal law. Resolution 68-16 requires that existing water quality be maintained unless degradation is justified based on specific findings. The Central Valley Water Board's Basin Plan implements, and incorporates by reference, both the State and federal antidegradation policies. The permitted discharge must be consistent with the antidegradation provision of 40 C.F.R. section 131.12 and State Water Board Resolution 68-16.

4. **Antidegradation Policy.** Federal regulation 40 C.F.R. section 131.12 requires that the state water quality standards include an antidegradation policy consistent with the federal policy. The State Water Board established California's antidegradation policy in State Water Board Resolution 68-16. Resolution 68-16 is deemed to incorporate the federal antidegradation policy where the federal policy applies under federal law.
Resolution 68-16 requires that existing water quality be maintained unless degradation is justified based on specific findings. The Central Valley Water Board's Basin Plan implements, and incorporates by reference, both the State and federal antidegradation policies. The permitted discharge must be consistent with the antidegradation provision of 40 C.F.R. section 131.12 and State Water Board Resolution 68-16.

5. **Anti-Backsliding Requirements.** Sections 402(o) and 303(d)(4) of the CWA and federal regulations at 40 C.F.R. section 122.44(l) restrict backsliding in NPDES permits. These anti-backsliding provisions require that effluent limitations in a reissued permit must be as stringent as those in the previous permit, with some exceptions in which limitations may be relaxed.

6. **Domestic Water Quality.** In compliance with Water Code section 106.3, it is the policy of the State of California that every human being has the right to safe, clean, affordable, and accessible water adequate for human consumption, cooking, and sanitary purposes. This Order promotes that policy by requiring discharges to meet maximum contaminant levels designed to protect human health and ensure that water is safe for domestic use.

7. **Endangered Species Act Requirements.** This Order does not authorize any act that results in the taking of a threatened or endangered species or any act that is now prohibited, or becomes prohibited in the future, under either the California Endangered Species Act (Fish and Game Code, §§ 2050 to 2097) or the Federal Endangered Species Act (16 U.S.C.A. §§ 1531 to 1544). This Order requires compliance with effluent

limits, receiving water limits, and other requirements to protect the beneficial uses of waters of the state. The discharger is responsible for meeting all requirements of the applicable Endangered Species Act.

8. **Emergency Planning and Community Right to Know Act.** Section 13263.6(a) of the Water Code, requires that *"the Regional Water Board shall prescribe effluent limitations as part of the waste discharge requirements of a POTW for all substances that the most recent toxic chemical release data reported to the state emergency response commission pursuant to Section 313 of the Emergency Planning and Community Right to Know Act of 1986 (42 U.S.C. Sec. 11023) (EPCRA) indicate as discharged into the POTW, for which the State Water Board or the Regional Water Board has established numeric water quality objectives, and has determined that the discharge is or may be discharged at a level which will cause, have the reasonable potential to cause, or contribute to, an excursion above any numeric water quality objective"*.

   The most recent toxic chemical data report does not indicate any reportable off-site releases or discharges to the collection system for this Facility. Therefore, a reasonable potential analysis based on information from EPCRA cannot be conducted. Based on information from EPCRA, there is no reasonable potential to cause or contribute to an excursion above any numeric water quality objectives included within the Basin Plan or in any State Water Board plan, so no effluent limitations are included in this permit pursuant to Water Code section 13263.6(a).

   However, as detailed elsewhere in this Order, available effluent data indicate that there are constituents present in the effluent that have a reasonable potential to cause or contribute to exceedances of water quality standards and require inclusion of effluent limitations based on federal and state laws and regulations.

9. **Storm Water Requirements.** USEPA promulgated federal regulations for storm water on 16 November 1990 in 40 CFR Parts 122, 123, and 124. The NPDES Industrial Storm Water Program regulates storm water discharges from wastewater treatment facilities with design average dry weather flows exceeding 1 mgd. All storm water on site is collected and introduced to the treatment system and discharged as treated wastewater.

D. Impaired Water Bodies on CWA 303(d) List

1. Under section 303(d) of the 1972 CWA, states, territories and authorized tribes are required to develop lists of water quality limited segments. The waters on these lists do not meet water quality standards, even after point sources of pollution have installed the minimum required levels of pollution control technology. On 11 October 2011 USEPA gave final approval to California's 2008-2010 section 303(d) List of Water Quality Limited Segments. The Basin Plan references this list of Water Quality Limited Segments (WQLSs), which are defined as "…*those sections of lakes, streams, rivers or other fresh water bodies where water quality does not meet (or is not expected to meet) water quality standards even after the application of appropriate limitations for point sources* (40 CFR Part 130, et seq.)." The Basin Plan also states, "*Additional treatment beyond minimum federal standards will be imposed on dischargers to [WQLSs]. Dischargers will be assigned or allocated a maximum allowable load of critical pollutants so that water quality objectives can be met in the segment*." The North Fork Calaveras River is not specifically listed in the 303(d) list of impaired waters. However, the North Fork Calaveras River is a tributary of New Hogan Reservoir, a water body of the United States, which is listed on the 303(d) list of impaired water bodies. New Hogan Reservoir is listed on the 303(d) list for mercury.

2. **Total Maximum Daily Loads (TMDL's).** USEPA requires the Central Valley Water Board to develop TMDL's for each 303(d) listed pollutant and water body combination. TMDL's have not been developed for the North Fork Calaveras River, however TMDL'S are being developed for the New Hogan Reservoir, to which the North Fork Calaveras River is a tributary (see Table F-5 below).

Table F-5. 303 (d) List for New Hogan Reservoir.

Pollutant	Potential Sources	Proposed TMDL Completion
Mercury	Resource Extraction	2021

3. The 303(d) listings and TMDL's have been considered in the development of the Order. A pollutant-by-pollutant evaluation of each pollutant of concern is described in section VI.C.3 of this Fact Sheet.

E. Other Plans, Polices and Regulations

1. **Title 27.** The discharge authorized herein and the treatment and storage facilities associated with the discharge of treated municipal wastewater, except for discharges of residual sludge and solid waste, are exempt from the requirements of Title 27, California Code of Regulations (CCR), section 20005 *et seq* (hereafter Title 27). The exemption, pursuant to Title 27 CCR section 20090(a), is based on the following:

   a. **Storage Pond D.** Title 27 section 20090(a) contains a sewage exemption, which contains a conditional exemption for *"Discharges of domestic sewage or treated effluent which are regulated by WDR's issued pursuant to Chapter 9, Division 3, Title 23 of this code, or for which WDR's have been waived, and which are consistent with applicable water quality objectives…"* and an unconditional exemption for "treatment or storage facilities associated with municipal wastewater treatment plants".

   The State Water Board's recent revision to the decision on the City of Lodi petition[1] indicates that the unconditional exemption covers post-treatment storage facilities that are "associated with" municipal wastewater treatment plants if the facilities (1) are used to store treated municipal wastewater prior to ultimate disposal or reuse, and (2) do not receive any other wastes other than on-site storm water flows if authorized by the State Water Board or the applicable regional water quality control board, and (3) are under the control of the municipal treatment plant. Facilities that are subject to the municipal wastewater treatment plant waste discharge requirements, water recycling requirements, or other permitting mechanism issued to the municipal wastewater treatment plant owner or operator are considered to be "under the control" of the municipal treatment plant.

   Pond D is used to store treated wastewater prior to application to the DLDA through sprinkler application. Additionally, Pond D does not receive any other wastes aside from treated wastewater and is under control of the Facility, which is subject to the requirements of this Order. Therefore, Pond D is exempt from the requirements of Title 27, pursuant to Title 27 CCR section 20090(a).

   b. **Land Application.** The Discharger disposes of treated wastewater by land application to the DLDA through the use of sprinkler application. Title 27 section

[1] Order WQ 2012-0001 In the Matter of Own Motion Review of City of Lodi Waste Discharge Requirements and Master Reclamation Permit (Order R5-2007-0113 [NPDES NO. CA0079243]) - SWRCB/OCC FILE A-1886.

20090(a) contains a sewage exemption, which contains a conditional exemption for *"Discharges of domestic sewage or treated effluent which are regulated by WDR's issued pursuant to Chapter 9, Division 3, Title 23 of this code, or for which WDR's have been waived, and which are consistent with applicable water quality objectives…"* Discharge of treated wastewater to the DLDA is regulated by the Waste Discharge Requirements of this Order, and is consistent with applicable water quality objectives, therefore, the discharge of treated wastewater to the DLDA is exempt from Title 27 pursuant to Section 20090(a).

IV. RATIONALE FOR EFFLUENT LIMITATIONS AND DISCHARGE SPECIFICATIONS

Effluent limitations and toxic and pretreatment effluent standards established pursuant to sections 301 (Effluent Limitations), 302 (Water Quality Related Effluent Limitations), 304 (Information and Guidelines), and 307 (Toxic and Pretreatment Effluent Standards) of the CWA and amendments thereto are applicable to the discharge.

The CWA mandates the implementation of effluent limitations that are as stringent as necessary to meet water quality standards established pursuant to state or federal law [33 U.S.C., §1311(b)(1)(C); 40 CFR 122.44(d)(1)]. NPDES permits must incorporate discharge limits necessary to ensure that water quality standards are met. This requirement applies to narrative criteria as well as to criteria specifying maximum amounts of particular pollutants. Pursuant to federal regulations, 40 CFR 122.44(d)(1)(i), NPDES permits must contain limits that control all pollutants that "are or may be discharged at a level which will cause, have the reasonable potential to cause, or contribute to an excursion above any state water quality standard, including state narrative criteria for water quality." Federal regulations, 40 CFR 122.44(d)(1)(vi), further provide that "[w]here a state has not established a water quality criterion for a specific chemical pollutant that is present in an effluent at a concentration that causes, has the reasonable potential to cause, or contributes to an excursion above a narrative criterion within an applicable State water quality standard, the permitting authority must establish effluent limits."

The CWA requires point source dischargers to control the amount of conventional, non-conventional, and toxic pollutants that are discharged into the waters of the United States. The control of pollutants discharged is established through effluent limitations and other requirements in NPDES permits. There are two principal bases for effluent limitations in the Code of Federal Regulations: 40 CFR 122.44(a) requires that permits include applicable technology-based limitations and standards; and 40 CFR 122.44(d) requires that permits include WQBEL's to attain and maintain applicable numeric and narrative water quality criteria to protect the beneficial uses of the receiving water where numeric water quality objectives have not been established. The Basin Plan at page IV-17, contains an implementation policy, "Policy for Application of Water Quality Objectives", that specifies that the Central Valley Water Board "will, on a case-by-case basis, adopt numerical limitations in orders which will implement the narrative objectives." This Policy complies with 40 CFR 122.44(d)(1). With respect to narrative objectives, the Central Valley Water Board must establish effluent limitations using one or more of three specified sources, including: (1) USEPA's published water quality criteria, (2) a proposed state criterion (i.e., water quality objective) or an explicit state policy interpreting its narrative water quality criteria (i.e., the Central Valley Water Board's "Policy for Application of Water Quality Objectives")(40 CFR 122.44(d)(1)(vi)(A), (B) or (C)), or (3) an indicator parameter.

The Basin Plan includes numeric site-specific water quality objectives and narrative objectives for toxicity, chemical constituents, discoloration, radionuclides, and tastes and odors. The narrative toxicity objective states: "All waters shall be maintained free of toxic substances in concentrations that produce detrimental physiological responses in human, plant, animal, or aquatic life." (Basin Plan at III-8.00) The Basin Plan states that material and relevant information, including numeric criteria, and recommendations from other agencies and scientific literature will be utilized in

evaluating compliance with the narrative toxicity objective. The narrative chemical constituents objective states that waters shall not contain chemical constituents in concentrations that adversely affect beneficial uses. At minimum, "…water designated for use as domestic or municipal supply (MUN) shall not contain concentrations of chemical constituents in excess of the maximum contaminant levels (MCLs)" in Title 22 of CCR. The Basin Plan further states that, to protect all beneficial uses, the Central Valley Water Board may apply limits more stringent than MCLs. The narrative tastes and odors objective states: "Water shall not contain taste- or odor-producing substances in concentrations that impart undesirable tastes or odors to domestic or municipal water supplies or to fish flesh or other edible products of aquatic origin, or that cause nuisance, or otherwise adversely affect beneficial uses."

A. Discharge Prohibitions

1. **Prohibition III.A (No discharge or application of waste other than that described in this Order).** This prohibition is based on Water Code section 13260 that requires filing of a report of waste discharge (ROWD) before discharges can occur. The Discharger submitted a ROWD for the discharges described in this Order; therefore, discharges not described in this Order are prohibited.

2. **Prohibition III.B (No bypasses or overflow of untreated wastewater, except under the conditions at CFR Part 122.41(m)(4)).** As stated in section I.G of Attachment D, Standard Provisions, this Order prohibits bypass from any portion of the treatment facility. Federal regulations, 40 CFR 122.41(m), define "bypass" as the intentional diversion of waste streams from any portion of a treatment facility. This section of the federal regulations, 40 CFR 122.41(m)(4), prohibits bypass unless it is unavoidable to prevent loss of life, personal injury, or severe property damage. In considering the Regional Water Board's prohibition of bypasses, the State Water Board adopted a precedential decision, Order No. WQO 2002-0015, which cites the federal regulations, 40 CFR 122.41(m), as allowing bypass only for essential maintenance to assure efficient operation.

3. **Prohibition III.C (No controllable condition shall create a nuisance).** This prohibition is based on Water Code section 13050 that requires water quality objectives established for the prevention of nuisance within a specific area. The Basin Plan prohibits conditions that create a nuisance

4. **Prohibition III.D (No inclusion of pollutant free wastewater shall cause improper operation of the Facility's systems).** This prohibition is based on CFR Part 122.41 et seq. that requires the proper design and operation of treatment facilities

5. **Prohibition III.E.** Order R5-2009-0007 contained a prohibition of discharges to the North Fork Calaveras River from 1 May through 31 October of each year. This prohibition is retained in this Order. In the cover letter to the ROWD the Discharger requested that the discharge season be extended from 1 November through 30 April to 1 October through 30 June in order to alleviate the lack of storage capacity experienced by the Discharger during wet months in which discharge to the North Fork Calaveras River is prohibited. However, the Discharger is also in the process of developing the Neilson Property in order to expand the land disposal potential of the DLDA. In order to authorize an extension of the surface water discharge season, the Discharger must submit a report evaluating the use of additional land disposal area as an alternative to extension of the surface water discharge season. Should the Discharger submit an evaluation demonstrating that utilizing the additional land disposal does not mitigate the need for extension of the surface water season and submits an antidegradation analysis for the increased discharge to surface water that demonstrates compliance with State and

federal antidegradation requirements, this Order may be reopened to modify the prohibition to extend the permitted period of surface water discharge.

6. **Prohibition III.F.** Order R5-2009-007 contained a prohibition of discharges of secondary treated effluent to the North Fork Calaveras River which do not receive a minimum of 20:1 dilution as a daily average, because adequate disinfection is currently not provided to allow discharges at lower flow ratios. In a letter to the Central Valley Water Board dated 8 April 1999, California Department of Public Health (DPH) indicated it would consider wastewater discharged to water bodies with identified beneficial uses of contact recreation and where the wastewater receives dilution of more than 20:1 to be adequately disinfected if the effluent coliform concentration does not exceed 23 MPN/100 mL as a 7-day median and if the effluent coliform concentration does not exceed 240 MPN/100 mL more than once in any 30 day period (Disinfected Secondary). Although the Facility was recently upgraded to provide tertiary filtration, this Order includes disinfection requirements equivalent to the Disinfected Secondary requirements for total coliform organisms discussed above. The DPH has developed reclamation criteria, CCR, Division 4, Chapter 3 (Title 22), for the reuse of wastewater. Title 22 requires that for spray irrigation of food crops, parks, playgrounds, schoolyards, and other areas of similar public access, wastewater be adequately disinfected, oxidized, coagulated, clarified, and filtered, and that the effluent total coliform levels not exceed 2.2 MPN/100 mL as a 7-day median. Title 22 is not directly applicable to surface waters; however, the Regional Water Board finds that it is appropriate to apply an equivalent level of treatment to that required by DPH's reclamation criteria for receiving waters used for contact recreation purposes. The Discharger is currently able to provide an equivalent level of treatment required by DPH's reclamation criteria for discharges that do not receive 20:1 dilution. However, in order for the Central Valley Water Board to approve discharges of treated effluent to the North Fork Calaveras River that do not receive 20:1 dilution as a daily average the Discharger must submit an antidegradation analysis for the increased loadings satisfying the antidegradation requirements of Resolution 68-16 and 40 C.F.R. section 131.12.

B. Technology-Based Effluent Limitations

1. Scope and Authority

Section 301(b) of the CWA and implementing U.S. EPA permit regulations at 40 C.F.R. section 122.44 require that permits include conditions meeting applicable technology-based requirements at a minimum, and any more stringent effluent limitations necessary to meet applicable water quality standards. The discharge authorized by this Order must meet minimum federal technology-based requirements based on Secondary Treatment Standards at 40 C.F.R. part 133.

Regulations promulgated in 40 C.F.R. section 125.3(a)(1) require technology-based effluent limitations for municipal Dischargers to be placed in NPDES permits based on Secondary Treatment Standards or Equivalent to Secondary Treatment Standards.

The Federal Water Pollution Control Act Amendments of 1972 (PL 92-500) established the minimum performance requirements for POTW's [defined in section 304(d)(1)]. Section 301(b)(1)(B) of that Act requires that such treatment works must, as a minimum, meet effluent limitations based on secondary treatment as defined by the U.S. EPA Administrator.

Based on this statutory requirement, U.S. EPA developed secondary treatment regulations, which are specified in 40 C.F.R. part 133. These technology-based regulations apply to all municipal wastewater treatment plants and identify the minimum

level of effluent quality attainable by secondary treatment in terms of biochemical oxygen demand (BOD_5), total suspended solids (TSS), and pH.

2. Applicable Technology-Based Effluent Limitations

a. **BOD_5 and TSS.** Federal regulations at 40 CFR Part 133, establish the minimum weekly and monthly average level of effluent quality attainable by secondary treatment for BOD_5 and TSS. A daily maximum effluent limitation for BOD_5 and TSS is also included in the Order to ensure that the treatment works are not organically overloaded and operate in accordance with design capabilities. In addition, 40 CFR 133.102, in describing the minimum level of effluent quality attainable by secondary treatment, states that the 30-day average percent removal shall not be less than 85 percent. This Order contains a limitation requiring an average of 85 percent removal of BOD_5 and TSS over each calendar month.

b. **Flow.** The Facility was designed to provide secondary treatment for up to a design average dry weather flow of 0.4 MGD and a peak wet weather flow of 1.9 MGD. Therefore, this Order contains an average daily discharge flow effluent limit of 1.5 MGD.

c. **pH.** The secondary treatment regulations at 40 CFR Part 133 also require that pH be maintained between 6.0 and 9.0 standard units.

Summary of Technology-based Effluent Limitations
Discharge Point No. EFF-001

Table F-6. Summary of Technology-based Effluent Limitations

Parameter	Units	Effluent Limitations				
		Average Monthly	Average Weekly	Maximum Daily	Instantaneous Minimum	Instantaneous Maximum
Flow [1]	MGD	--	--	1.5	--	--
pH[2]	Standard units	--	--	--	6.0	9.0
Biochemical Oxygen Demand (5-day @ 20°C)[1]	mg/L	30	45	60	--	--
	lbs/day [3]	375	563	751	--	--
	% Removal	85	--	--	--	--
Total Suspended Solids[1]	mg/L	30	45	60	--	--
	lbs/day [3]	375	563	751	--	--
	% Removal	85	--	--	--	--

1. No WQBEL's are applicable, therefore, TBELs are implemented in this Order.
2. More stringent WQBEL required.
3. Based on design flow of 1.5 MGD.

C. Water Quality-Based Effluent Limitations (WQBEL's)

1. Scope and Authority

CWA Section 301(b) and 40 C.F.R. section 122.44(d) require that permits include limitations more stringent than applicable federal technology-based requirements where necessary to achieve applicable water quality standards.

Section 122.44(d)(1)(i) of 40 C.F.R. requires that permits include effluent limitations for all pollutants that are or may be discharged at levels that have the reasonable potential to cause or contribute to an exceedance of a water quality standard, including numeric and narrative objectives within a standard. Where reasonable potential has been established for a pollutant, but there is no numeric criterion or objective for the pollutant, water quality-based effluent limitations (WQBEL's) must be established using: (1) U.S. EPA criteria guidance under CWA section 304(a), supplemented where necessary by other relevant information; (2) an indicator parameter for the pollutant of concern; or (3) a calculated numeric water quality criterion, such as a proposed state criterion or policy interpreting the state's narrative criterion, supplemented with other relevant information, as provided in section 122.44(d)(1)(vi).

The process for determining reasonable potential and calculating WQBEL's when necessary is intended to protect the designated uses of the receiving water as specified in the Basin Plan, and achieve applicable water quality objectives and criteria that are contained in other state plans and policies, or any applicable water quality criteria contained in the CTR and NTR.

2. Applicable Beneficial Uses and Water Quality Criteria and Objectives

The Basin Plan designates beneficial uses, establishes water quality objectives, and contains implementation programs and policies to achieve those objectives for all waters addressed through the plan Therefore, the beneficial uses of the North Fork Calaveras River downstream of the discharge are water contact recreation, including canoeing and rafting; non-contact water recreation, including aesthetic enjoyment ; warm freshwater habitat; cold freshwater habitat; warm migration of aquatic organisms, warm and cold spawning, reproduction, and/or early development; and wildlife habitat.

The Basin Plan on page II-1.00 states: "*Protection and enhancement of existing and potential beneficial uses are primary goals of water quality planning…*" and with respect to disposal of wastewaters states that "...*disposal of wastewaters is [not] a prohibited use of waters of the State; it is merely a use which cannot be satisfied to the detriment of beneficial uses.*"

The federal CWA section 101(a)(2), states: "it is the national goal that wherever attainable, an interim goal of water quality which provides for the protection and propagation of fish, shellfish, and wildlife, and for recreation in and on the water be achieved by July 1, 1983." Federal Regulations, developed to implement the requirements of the CWA, create a rebuttable presumption that all waters be designated as fishable and swimmable. Federal Regulations, 40 CFR sections 131.2 and 131.10, require that all waters of the State regulated to protect the beneficial uses of public water supply, protection and propagation of fish, shell fish and wildlife, recreation in and on the water, agricultural, industrial and other purposes including navigation. Section 131.3(e), 40 CFR, defines existing beneficial uses as those uses actually attained after 28 November 1975, whether or not they are included in the water quality standards. Federal Regulation, 40 CFR section 131.10 requires that uses be obtained by implementing effluent limitations, requires that all downstream uses be protected and states that in no case shall a state adopt waste transport or waste assimilation as a beneficial use for any waters of the United States.

a. **Receiving Water and Beneficial Uses.** Refer to III.C.1. of this Fact Sheet for a complete description of the receiving water and beneficial uses.

b. **Effluent and Ambient Background Data.** The reasonable potential analysis (RPA), as described in section IV.C.3 of this Fact Sheet, was based on data from December

2010 through April 2013, which includes effluent and ambient background data submitted in SMRs, the Report of Waste Discharge (ROWD), and the Effluent and Receiving Water Characterization Study required by Order R5-2009-0007. Upgrades to the Facility were completed in December 2010, therefore, the data collected between December 2010 and April 2013 is representative of current operating conditions and capabilities of the Facility.

c. **Conversion Factors.** The CTR contains aquatic life criteria for arsenic, cadmium, chromium III, chromium VI, copper, lead, nickel, silver, and zinc which are presented in dissolved concentrations. USEPA recommends conversion factors to translate dissolved concentrations to total concentrations. The default USEPA conversion factors contained in Appendix 3 of the SIP were used to convert the applicable dissolved criteria to total recoverable criteria.

d. **Hardness-Dependent CTR Metals Criteria.** The *California Toxics Rule* and the *National Toxics Rule* contain water quality criteria for seven metals that vary as a function of hardness. The lower the hardness the lower the water quality criteria. The metals with hardness-dependent criteria include cadmium, copper, chromium III, lead, nickel, silver, and zinc.

This Order has established the criteria for hardness-dependent metals based on the reasonable worst-case ambient hardness as required by the SIP[1], the CTR[2] and State Water Board Order No. WQO 2008-0008 (City of Davis). The SIP and the CTR require the use of "receiving water" or "actual ambient" hardness, respectively, to determine effluent limitations for these metals. (SIP, § 1.2; 40 CFR § 131.38(c)(4)) The CTR does not define whether the term "ambient," as applied in the regulations, necessarily requires the consideration of upstream as opposed to downstream hardness conditions. Therefore, where reliable, representative data are available, the hardness value for calculating criteria can be the downstream receiving water hardness, after mixing with the effluent (Order WQO 2008-0008, p. 11). The Central Valley Water Board thus has considerable discretion in determining ambient hardness (*Id.*, p.10).

As discussed below, scientific literature provides a reliable method for calculating protective hardness-dependent CTR criteria, considering all discharge conditions. This methodology produces hardness-dependent CTR criteria based on the reasonable worst-case downstream ambient hardness that ensure these metals do not cause receiving water toxicity under any downstream receiving water condition. Under this methodology, the Central Valley Water Board considers all hardness conditions that could occur in the ambient downstream receiving water after the effluent has mixed with the water body[3]. This ensures that effluent limitations are

[1] The SIP does not address how to determine the hardness for application to the equations for the protection of aquatic life when using hardness-dependent metals criteria. It simply states, in Section 1.2, that the criteria shall be properly adjusted for hardness using the hardness of the receiving water.

[2] The CTR requires that, for waters with a hardness of 400 mg/L (as $CaCO_3$), or less, the actual ambient hardness of the surface water must be used. It further requires that the hardness values used must be consistent with the design discharge conditions for design flows and mixing zones.

[3] All effluent discharges will change the ambient downstream metals concentration and hardness. It is not possible to change the metals concentration without also changing the hardness.

fully protective of aquatic life in all areas of the receiving water affected by the discharge under all flow conditions, at the fully mixed location, and throughout the water body including at the point of discharge into the water body.

i. **Conducting the Reasonable Potential Analysis (RPA).** The SIP in Section 1.3 states, "The RWQCB shall…determine whether a discharge may: (1) cause, (2) have a reasonable potential to cause, or (3) contribute to an excursion above any applicable priority pollutant criterion or objective." Section 1.3 provides a step-by-step procedure for conducting the RPA. The procedure requires the comparison of the Maximum Effluent Concentration (MEC) and Maximum Ambient Background Concentration to the applicable criterion that has been properly adjusted for hardness. Unless otherwise noted, for the hardness-dependent CTR metals criteria the following procedures were followed for properly adjusting the criterion for hardness when conducting the RPA.

(a) The SIP requires water quality-based effluent limitations (WQBEL's) if the MEC is equal to or exceeds the applicable criterion, adjusted for hardness. For comparing the MEC to the applicable criterion, the "fully mixed" reasonable worst-case downstream ambient hardness was used to adjust the criterion. In this evaluation the portion of the receiving water affected by the discharge is analyzed. For hardness-dependent criteria, the hardness of the effluent has an impact on the determination of the applicable criterion in areas of the receiving water affected by the discharge. Therefore, for comparing the MEC to the applicable criterion, the reasonable worst-case downstream ambient hardness was used to adjust the criterion. For this situation it is necessary to consider the hardness of the effluent in determining the applicable hardness to adjust the criterion. The procedures for determining the applicable criterion after proper adjustment using the reasonable worst-case downstream ambient hardness is outlined in subsection ii, below.

(b) The SIP requires WQBEL's if the receiving water is impaired upstream (outside the influence) of the discharge, i.e., if the Maximum Ambient Background Concentration of a pollutant exceeds the applicable criterion, adjusted for hardness[1]. For comparing the Maximum Ambient Background Concentration to the applicable criterion, the reasonable worst-case upstream ambient hardness was used to adjust the criteria. This is appropriate, because this area is outside the influence of the discharge. Since the discharge does not impact the upstream hardness, the effect of the effluent hardness was not included in this evaluation.

ii. **Calculating Water Quality-Based Effluent Limitations.** The remaining discussion in this section relates to the development of WQBEL's when it has been determined that the discharge has reasonable potential to cause or contribute to an exceedance of the CTR hardness-dependent metals criteria in the receiving water.

[1] The pollutant must also be detected in the effluent.

A 2006 Study[1] developed procedures for calculating the effluent concentration allowance (ECA)[2] for CTR hardness-dependent metals. The 2006 Study demonstrated that it is necessary to evaluate all discharge conditions (e.g. high and low flow conditions) and the hardness and metals concentrations of the effluent and receiving water when determining the appropriate ECA for these hardness-dependent metals. This method is superior to relying on downstream receiving water samples alone because it captures all possible mixed conditions in the receiving water. Both receiving water and effluent hardness vary based on flow and other factors, but the variability of receiving water and effluent hardness is sometimes independent. Using a calculated hardness value ensures that the Central Valley Water Board considers all possible mixed downstream values that may result from these two independent variables. Relying on receiving water sampling alone is less likely to capture all possible mixed downstream conditions.

The equation describing the total recoverable regulatory criterion, as established in the CTR[3], is as follows:

CTR Criterion = WER x ($e^{m[\ln(H)]+b}$) (Equation 1)

Where:

H = hardness (as $CaCO_3$)[4]

WER = water-effect ratio

m, b = metal- and criterion-specific constants

In accordance with the CTR, the default value for the WER is 1. A WER study must be conducted to use a value other than 1. The constants “m” and “b” are specific to both the metal under consideration, and the type of total recoverable criterion (i.e., acute or chronic). The metal-specific values for these constants are provided in the CTR at paragraph (b)(2), Table 1.

The equation for the ECA is defined in Section 1.4, Step 2, of the SIP and is as follows:

ECA = C (when C ≤ B)[5] (Equation 2)

Where:

C = the priority pollutant criterion/objective, adjusted for hardness (see Equation 1, above)

B = the ambient background concentration

The 2006 Study demonstrated that the relationship between hardness and the calculated criteria is the same for some metals, so the same procedure for

[1] Emerick, R.W.; Borroum, Y.; & Pedri, J.E., 2006. California and National Toxics Rule Implementation and Development of Protective Hardness Based Metal Effluent Limitations. WEFTEC, Chicago, Ill.

[2] The ECA is defined in Appendix 1 of the SIP (page Appendix 1-2). The ECA is used to calculate WQBEL’s in accordance with Section 1.4 of the SIP.

[3] 40 CFR § 131.38(b)(2).

[4] For this discussion, all hardness values are in mg/L as $CaCO_3$.

[5] The 2006 Study assumes the ambient background metals concentration is equal to the CTR criterion (i.e. C ≤ B)

calculating the ECA may be used for these metals. The same procedure can be used for cadmium (chronic), chromium III, copper, nickel, and zinc. These metals are hereinafter referred to as "Concave Down Metals". "Concave Down" refers to the shape of the curve represented by the relationship between hardness and the CTR criteria in Equation 1. Another similar procedure can be used for determining the ECA for cadmium (acute), lead, and silver, which are referred to hereafter as "Concave Up Metals".

ECA for Cadmium (Chronic), Chromium III, Copper, Nickel, and Zinc – For Concave Down Metals (i.e., cadmium (chronic), chromium III, copper, nickel, and zinc) the 2006 Study demonstrates that when the effluent is in compliance with the CTR criteria and the upstream receiving water is in compliance with the CTR criteria, any mixture of the effluent and receiving water will always be in compliance with the CTR criteria[1]. The 2006 Study proves that regardless of whether the effluent hardness is lower or greater than the upstream hardness, the reasonable worst-case flow condition is the effluent dominated condition (i.e., no receiving water flow)[2]. Consequently, for Concave Down Metals, the CTR criteria have been calculated using the downstream ambient hardness under this condition.

The effluent hardness ranged from 71 mg/L to 120 mg/L, based on 13 samples from December 2010 to April 2013. The upstream receiving water hardness varied from 39 mg/L to 120 mg/L, based on 32 samples from January 2011 to December 2012, and the downstream receiving water hardness varied from 56 mg/L to 129 mg/L, during the same period. Under the effluent dominated condition, the reasonable worst-case downstream ambient hardness is 71 mg/L. As demonstrated in the example shown in Table F-7, below, using this hardness to calculate the ECA for all Concave Down Metals will result in WQBEL's that are protective under all flow conditions, from the effluent dominated condition to high flow condition. This example for zinc assumes the following conservative conditions for the upstream receiving water:

Upstream receiving water <u>always</u> at the lowest observed upstream receiving water hardness (i.e., 39 mg/L)

Upstream receiving water copper concentration <u>always</u> at the CTR criteria (i.e., no assimilative capacity).

Using these reasonable worst-case receiving water conditions, a simple mass balance (as shown in Equation 3, below) accounts for all possible mixtures of effluent and receiving water under all flow conditions.

$C_{MIX} = C_{RW} \times (1\text{-}EF) + C_{Eff} \times (EF)$ (Equation 3)

Where:

C_{MIX} = Mixed concentration (e.g. metals or hardness)

[1] 2006 Study, p. 5700

[2] There are two typographical errors in the 2006 Study in the discussion of Concave Down Metals when the effluent hardness is less than the receiving water hardness. The effluent and receiving water hardness were transposed in the discussion, but the correct hardness values were used in the calculations. The typographical errors were confirmed by the author of the 2006 Study, by email dated 1 April 2011, from Dr. Robert Emerick to Mr. James Marshall, Central Valley Water Board.

C_{RW} = Upstream receiving water concentration

C_{Eff} = Effluent concentration

EF = Effluent Fraction

In this example, for zinc, for any receiving water flow condition (high flow to low flow), the fully-mixed downstream ambient zinc concentration is in compliance with the CTR criteria.[1].

Table F-7. Zinc ECA Evaluation

Lowest Observed Effluent Hardness					**71 mg/L (as $CaCO_3$)**
Lowest Observed Upstream Receiving Water Hardness					**39 mg/L (as $CaCO_3$)**
Highest Assumed Upstream Receiving Water Zinc Concentration					**54.3 µg/L[1]**
Zinc $ECA_{chronic}$[2]					**89.6 µg/L**
Effluent Fraction[6]		**Fully Mixed Downstream Ambient Concentration**			
		Hardness[3] (mg/L)	**CTR Criteria[4] (µg/L)**	**Zinc[5] (µg/L)**	**Complies with CTR Criteria**
High Flow	1%	39.32	54.3	54.3	Yes
	5%	40.6	55.8	55.7	Yes
	15%	43.8	59.5	59.3	Yes
	25%	47	63.2	62.9	Yes
	50%	55	72.2	71.8	Yes
	75%	63	81.0	80.7	Yes
Low Flow	100%	71	89.6	89.6	Yes

1 Highest assumed upstream receiving water zinc concentration calculated using Equation 1 for chronic criterion at a hardness of 39 mg/L.

2 ECA calculated using Equation 1 for chronic criterion at a hardness of 71 mg/L.

3 Fully mixed downstream ambient hardness is the mixture of the receiving water and effluent hardness at the applicable effluent fraction using Equation 3.

4 Fully mixed downstream ambient criteria are the chronic criteria calculated using Equation 1 at the mixed hardness.

5 Fully mixed downstream ambient zinc concentration is the mixture of the receiving water and effluent zinc concentrations at the applicable effluent fraction using Equation 3.

6 The effluent fraction ranges from 1% at the high receiving water flow condition, to 100% at the lowest receiving water flow condition (i.e., effluent dominated).

---

1 This method considers the actual lowest observed upstream hardness and actual lowest observed effluent hardness to determine the reasonable worst-case ambient downstream hardness under all possible receiving water flow conditions. Table F-7 demonstrates that the receiving water is always in compliance with the CTR criteria at the fully-mixed location in the receiving water. It also demonstrates that the receiving water is in compliance with the CTR criteria for all mixtures from the point of discharge to the fully-mixed location. Therefore, a mixing zone is not used for compliance.

ECA for Cadmium (Acute), Lead, and Silver (Acute) – For Concave Up Metals (i.e., cadmium (acute), lead, and silver (acute)), the relationship between hardness and the metals criteria is different than for Concave Down Metals. The 2006 Study demonstrates that for Concave Up Metals, the effluent and upstream receiving water can be in compliance with the CTR criteria, but the resulting mixture may contain metals concentrations that exceed the CTR criteria and could cause toxicity. For these metals, the 2006 Study provides a mathematical approach to calculate the ECA that is protective of aquatic life, in all areas of the receiving water affected by the discharge, under all discharge and receiving water flow conditions (see Equation 4, below).

The ECA, as calculated using Equation 4, is based on the reasonable worst-case upstream receiving water hardness, the lowest observed effluent hardness, and assuming no receiving water assimilative capacity for metals (i.e., ambient background metals concentrations are at their respective CTR criterion). Equation 4 is not used in place of the CTR equation (Equation 1). Rather, Equation 4, which is derived using the CTR equation, is used as a direct approach for calculating the ECA. This replaces an iterative approach for calculating the ECA. The CTR equation has been used to evaluate the receiving water downstream of the discharge at all discharge and flow conditions to ensure the ECA is protective (e.g., see Table F-8).

$$\text{ECA} = \left(\frac{m\left(H_e - H_{rw}\right)\left(e^{m\{\ln(H_{rw})\}+b}\right)}{H_{rw}} \right) + e^{m\{\ln(H_{rw})\}+b} \qquad \text{(Equation 4)}$$

Where:

m, b = criterion specific constants (from CTR)

H_e = lowest observed effluent hardness

H_{rw} = reasonable worst-case upstream receiving water hardness

An example similar to the Concave Down Metals is shown for lead**,** a Concave Up Metal, in Table F-7, below. As previously mentioned, the lowest effluent hardness is 71 mg/L, while the upstream receiving water hardness ranged from 39 mg/L to 120 mg/L, and the downstream receiving water hardness ranged from 56 mg/L to 129 mg/L. In this case, the reasonable worst-case upstream receiving water hardness to use in Equation 4 to calculate the ECA is 120 mg/L.

Using the procedures discussed above to calculate the ECA for all Concave Up Metals will result in WQBEL's that are protective under all potential effluent/receiving water flow conditions (high flow to low flow) and under all known hardness conditions, as demonstrated in Table F-8, for lead.

Table F-8. Lead ECA Evaluation

Lowest Observed Effluent Hardness	71 mg/L (as $CaCO_3$)
Reasonable Worst-case Upstream Receiving Water Hardness	120 mg/L (as $CaCO_3$)
Reasonable Worst-case Upstream Receiving Water Lead Concentration	4.0 µg/L[1]
Lead $ECA_{chronic}$[2]	1.9 µg/L

Effluent Fraction[6]		**Fully Mixed Downstream Ambient Concentration**			
		Hardness[3] (mg/L) (as $CaCO_3$)	**CTR Criteria[4] (µg/L)**	**Lead[5] (µg/L)**	**Complies with CTR Criteria**
High Flow ↓ Low Flow	1%	119.5	4.0	4.0	Yes
	5%	117.6	3.9	3.9	Yes
	15%	112.7	3.7	3.7	Yes
	25%	107.8	3.5	3.5	Yes
	50%	95.5	3.0	3.0	Yes
	75%	83.3	2.5	2.4	Yes
	100%	71.0	2.1	1.9	Yes

1 Reasonable worst-case upstream receiving water lead concentration calculated using Equation 1 for chronic criterion at a hardness of 120 mg/L.

2 ECA calculated using Equation 4 for chronic criteria.

3 Fully mixed downstream ambient hardness is the mixture of the receiving water and effluent hardness at the applicable effluent fraction.

4 Fully mixed downstream ambient criteria are the chronic criteria calculated using Equation 1 at the mixed hardness.

5 Fully mixed downstream ambient lead concentration is the mixture of the receiving water and effluent lead concentrations at the applicable effluent fraction.

6 The effluent fraction ranges from 1% at the high receiving water flow condition, to 100% at the lowest receiving water flow condition (i.e., effluent dominated).

Based on the procedures discussed above, Table F-9 lists all the CTR hardness-dependent metals and the associated ECA used in this Order.

Table F-9. Summary of ECA Evaluations for CTR Hardness-dependent Metals

CTR Metals	ECA (µg/L, total recoverable)[1]	
	acute	chronic
Copper	76[2]	53[2]
Chromium III	1300	160
Cadmium	3.0	1.9
Lead	49	1.9
Nickel	350	39
Silver	1.7	--
Zinc	90	90

[1] Metal criteria rounded to two significant figures in accordance with the CTR.
[2] Calculated using a site specific Water Effects Ratio of 7.55.

3. Determining the Need for WQBEL's

a. **Constituents with No Reasonable Potential.** WQBEL's are not included in this Order for constituents that do not demonstrate reasonable potential (i.e. constituents were not detected in the effluent or receiving water); however, monitoring for those pollutants is established in this Order as required by the SIP. If the results of effluent monitoring demonstrate reasonable potential, this Order may be reopened and modified by adding an appropriate effluent limitation.

Most constituents with no reasonable potential are not discussed in this Order. However, the following constituents were found to have no reasonable potential after assessment of the data:

iii. **Aluminum**

Aluminum is the third most abundant element in the earth's crust and is ubiquitous in both soils and aquatic sediments. When mobilized in surface waters, aluminum has been shown to be toxic to various fish species. However, the potential for aluminum toxicity in surface waters is directly related to the chemical form of aluminum present, and the chemical form is highly dependent on water quality characteristics that ultimately determine the mechanism of aluminum toxicity. Surface water characteristics, including pH, temperature, colloidal material, fluoride and sulfate concentrations, and total organic carbon, all influence aluminum speciation and its subsequent bioavailability to aquatic life. Calcium [hardness] concentrations in surface water may also reduce aluminum toxicity by competing with monomeric aluminum (Al^{3+}) binding to negatively charged fish gills.

(a) **WQO.** The Code of Federal Regulations promulgated criteria for priority toxic pollutants for California's surface waters as part of section 131.38

Establishment of Numeric Criteria for Priority Toxic Pollutants for the State of California (California Toxics Rule or CTR), including metals criteria. However, aluminum criteria were not promulgated as part of the CTR. Absent numeric aquatic life criteria for aluminum, WQBEL's in the Central Valley Region's NPDES permits are based on the Basin Plans' narrative toxicity objective. The Basin Plans' *Policy for Application of Water Quality Objectives* requires the Central Valley Water Board to consider, "*on a case-by-case basis, direct evidence of beneficial use impacts, all material and relevant information submitted by the discharger and other interested parties, and relevant numerical criteria and guidelines developed and/or published by other agencies and organizations. In considering such criteria, the Board evaluates whether the specific numerical criteria which are available through these sources and through other information supplied to the Board, are relevant and appropriate to the situation at hand and, therefore, should be used in determining compliance with the narrative objective*." Relevant information includes, but is not limited to (1) USEPA Ambient Water Quality Criteria *for Aluminum* (NAWQC) and subsequent Correction, (2) site-specific conditions of the North Fork Calaveras River, the receiving water, and (3) site-specific aluminum studies conducted by dischargers within the Central Valley Region. (Basin Plan, p. IV.-17.00; see also, 40 CFR 122.44(d)(vi).)

USEPA NAWQC. USEPA recommended the NAWQC aluminum acute criterion at 750 µg/L based on test waters with a pH of 6.5 to 9.0. USEPA also recommended the NAWQC aluminum chronic criterion at 87 µg/L based upon the following two toxicity tests. All test waters contained hardness at 12 mg/L as $CaCO_3$.

(1) Acute toxicity tests at various aluminum doses were conducted in various acidic waters (pH 6.0 – 6.5) on 159- and 160-day old striped bass. The 159-day old striped bass showed no mortality in waters with pH at 6.5 and aluminum doses at 390 µg/L, and the 160-day old striped bass showed 58% mortality at a dose of 174.4 µg/L in same pH waters. However, the 160-day old striped bass showed 98% mortality at aluminum dose of 87.2 µg/L in waters with pH at 6.0, which is USEPA's basis for the 87 µg/L chronic criterion. The varied results draw into question this study and the applicability of the NAWQC chronic criterion of 87 µg/L.

(2) Chronic toxicity effects on 60-day old brook trout were evaluated in circumneutral pH waters (6.5-6.9 pH) in five cells at various aluminum doses (4, 57, 88, 169, and 350 µg/L). Chronic evaluation started upon hatching of eyed eggs of brook trout, and their weight and length were measured after 45 days and 60 days. The 60-day old brook trout showed 24% weight loss at 169 µg/L of aluminum and 4% weight loss at 88 µg/L of aluminum, which is the basis for USEPA's chronic criteria. Though this test study shows chronic toxic effects of 4% reduction in weight after exposure for 60-days, the chronic criterion is based on 4-day exposure; so again, the applicability of the NAWQC chronic criterion of 87 µg/L is questionable.

Site-specific Conditions. USEPA advises that a water effects ratio may be more appropriate to better reflect the actual toxicity of aluminum to

aquatic organisms when the pH and hardness conditions of the receiving water are not similar to that of the test conditions.[1] Effluent and North Fork Calaveras River monitoring data indicate that the pH and hardness values are not similar to the low pH and hardness conditions under which the chronic criterion for aluminum was developed, as shown in the table below, and therefore, the Central Valley Water Board does not expect aluminum to be as toxic in the North Fork Calaveras River as in the previously described toxicity tests. The pH of the North Fork Calaveras River, the receiving water, ranged from 7.1 to 8.4 with a median of 7.6 based on 49 monitoring results obtained between December 2010 and March 2013. These water conditions typically are circumneutral pH where aluminum is predominately in the form of $Al(OH)_3$ and non-toxic to aquatic life. The hardness of the North Fork Calaveras River ranged from 39 mg/L to 120 mg/L, based on 32 samples from January 2011 to April 2013, which is above the conditions, and thus less toxic, than the tests used to develop the chronic criterion.

Parameter	Units	Test Conditions for Applicability of Chronic Criterion	Effluent	Receiving Water
pH	standard units	6.0 – 6.5	6.4 - 8.3	7.1 – 8.3
Hardness, Total (as $CaCO_3$)	mg/L	12	59	39
Aluminum, Total Recoverable	µg/L	87.2 - 390	850	129

Local Environmental Conditions and Studies. Twenty-one site-specific aluminum toxicity tests have been conducted within the Central Valley Region. The pH and hardness of the North Fork Calaveras River are similar, as shown in the table below, and thus the results of these site-specific aluminum toxicity tests are relevant and appropriate for the North Fork Calaveras River. As shown in the following table, all EC_{50}[2] toxicity study result values are at concentrations of aluminum above 5,000 µg/L. Thus, the toxic effects of aluminum in these surface waters and in the North Fork Calaveras River, is less toxic (or less reactive) to aquatic species then demonstrated in the toxicity tests that USEPA used for the basis of establishing the chronic criterion of 87 µg/L. This new information, and review of the toxicity tests USEPA used to establish the chronic criterion, indicates that 87 µg/L is overly stringent and not applicable to the North Fork Calaveras River.

[1] "The value of 87 micro-g/L is based on a toxicity test with striped bass in water with pH = 6.5-6.6 and hardness < 10 mg/L. Data in [a 1994 Study] indicate that aluminum is substantially less toxic at higher pH and hardness, but the effects of pH and hardness are not well quantified at this time." USEPA 1999 NAWQC Correction, Footnote L

[2] The effect concentration is a point estimate of the toxicant concentration that would cause an observable adverse effect (e.g. death, immobilization, or serious incapitation) in a given percent of the test organisms, calculated from a continuous model (e.g. Probit Model). EC_{50} is a point estimate of the toxicant concentration that would cause an observable adverse effect in 50 percent of the test organisms. The EC_{50} is used in toxicity testing to determine the appropriate chronic criterion.

Central Valley Region Site-Specific Aluminum Toxicity Data

Discharger	Test Waters	Hardness Value	Total Aluminum EC_{50} Value	pH	WER
***Oncorhynchus mykiss* (rainbow trout)**					
Manteca	Surface Water/Effluent	124	>8600	9.14	N/C
Auburn	Surface Water	16	>16500	7.44	N/C
Modesto	Surface Water/Effluent	120/156	>34250	8.96	>229
Yuba City	Surface Water/Effluent	114/164[1]	>8000	7.60/7.46	>53.5
***Ceriodaphnia dubia* (water flea)**					
Auburn	Effluent	99	>5270	7.44	>19.3
	Surface Water	16	>5160	7.44	>12.4
Manteca	Surface Water/Effluent	124	>8800	9.14	N/C
	Effluent	117	>8700	7.21	>27.8
	Surface Water	57	7823	7.58	25.0
	Effluent	139	>9500	7.97	>21.2
	Surface Water	104	>11000	8.28	>24.5
	Effluent	128	>9700	7.78	>25.0
	Surface Water	85	>9450	7.85	>25.7
	Effluent	106	>11900	7.66	>15.3
	Surface Water	146	>10650	7.81	>13.7
Modesto	Surface Water/Effluent	120/156	31604	8.96	211
Yuba City	Surface Water/Effluent	114/164[1]	>8000	7.60/7.46	>53.5
Placer County	Effluent	150	>5000	7.4 – 8.7	>13.7
***Daphnia magna* (water flea)**					
Manteca	Surface Water/Effluent	124	>8350	9.14	N/C
Modesto	Surface Water/Effluent	120/156	>11900	8.96	>79.6
Yuba City	Surface Water/Effluent	114/164[1]	>8000	7.60/7.46	>53.5

[1] Hardness values may be biased high because the EDTA titrimetic method is subject to interferences that measure as hardness (barium, cadmium, lead, manganese, strontium, and zinc will be measured as hardness) producing hardness numbers that are likely to be greater than the calculation of hardness based upon the ICP analysis of calcium and magnesium. Upstream receiving water hardness ranged from 30 to 50.9 mg/L as $CaCO_3$ between January 2008 and August 2011. Furthermore, the upstream receiving water hardness was 37 mg/L as $CaCO_3$ on 4 October 2005, 7 days prior to the Feasibility Assessment (first phase of a Water Effects Ratio study) sample collection date of 11 October 2005. It is likely that matrix interferences from other metals were responsible for the unexpected hardness values reported by Pacific EcoRisk.

[2] N/C = Not Calculated

The Discharger has not conducted a toxicity test for aluminum; however, the City of Auburn conducted toxicity tests in the Auburn Ravine. As shown, the test water quality characteristics of the Auburn Ravine near Auburn are similar for pH and hardness in the North Fork Calaveras River, with the hardness ranging from 57 to 146 mg/L as $CaCO_3$ in comparison to the hardness of the North Fork Calaveras River near the discharge that averages 88 mg/L as $CaCO_3$. Thus, results of the site-specific study conducted on the Auburn Ravine near Auburn are representative of the North Fork Calaveras River near the discharge. Therefore, the City of Auburn aluminum toxicity test study is relevant for use in determining the

specific numerical criteria to be used in determining compliance with the Basin Plan's narrative toxicity objective. The City of Auburn aluminum toxicity study resulted in a minimum site-specific aluminum objective of 5,160 µg/L. Thus, these results support the conclusion that the 87 µg/L chronic criterion is overly stringent for the North Fork Calaveras River near the discharge.

Applicable WQOs. This Order implements the Basin Plan's narrative toxicity objective for the protection of aquatic life using an acute (1-hour) criterion and chronic (4-day) criterion of 750 µg/L based on USEPA's NAWQC and the discussion above.

(b) **RPA Results.** Since the Facility upgrades the MEC for aluminum was 850µg/L based on a sample collected on 2 February 2011. The Discharger suspects that the use of Alum as a coagulant led to increased levels of aluminum to be present in the effluent. The Discharger ceased the use of coagulants in the treatment process and since the beginning of the 2011 discharge season the MEC for aluminum was only 64 µg/L based on seven samples collected between February 2012 and April 2013. The maximum ambient background aluminum concentration was 120 µg/L based on four samples collected between February 2012 and April 2012. Therefore, the effluent aluminum concentration does not exhibit reasonable potential to cause or contribute to an in-stream excursion above the Basin Plan's narrative toxicity objective for the protection of aquatic life using an acute (1-hour) criterion and chronic (4-day) criterion of 750 µg/L based on USEPA's NAWQC for the protection of freshwater aquatic life, and the discussion above.

iv. **Bis(2-ethylhexyl)phthalate**

(a) **WQO.** The CTR includes a criterion of 5.9 µg/L for bis(2-ethylhexyl) phthalate (bis-2) for the protection of human health for fish consumption-only.

(b) **RPA Results.** The MEC for bis-2 was an estimated concentration of 1.1 µg/L based on 14 samples collected between December 2010 and April 2013. The Discharger sampled for bis-2 in the receiving water 4 times during their priority pollutant scan occurring between February 2012 and April 2012, all 4 of the sampling events did not detect bis-2 at an MDL of 0.95 µg/L. Therefore, bis-2 in the discharge does not demonstrate reasonable potential to cause or contribute to an in-stream excursion above the CTR Criterion of 5.9 µg/L, and the effluent limitations for bis-2 have not been retained in this Order. Removal of these effluent limitations is in accordance with federal anti-backsliding regulations (see section IV.D.3 of the Fact Sheet).

v. **Chlordane**

(a) **WQO.** The CTR contains a criterion of 0.00059 µg/L for the protection of human health for fish consumption-only. The Basin Plan also contains a WQO of non-detect for all persistent chlorinated hydrocarbon pesticides, such as chlordane.

(b) **RPA Results.** The Discharger collected 14 samples for chlordane between December 2010 and April 2013. All samples were analyzed using a method detection limit of 0.005 µg/L (SIP ML = 0.1 µg/L), chlordane was not

detected in any of the 14 samples. The Discharger sampled for chlordane in the receiving water 4 times during their priority pollutant scan occurring between February 2012 and April 2012, all 4 samples were non-detect. Therefore, chlordane does not exhibit reasonable potential to cause or contribute to an in-stream excursion above the applicable water quality objectives, and the effluent limitation for chlordane has not been retained in this Order. Removal of the effluent limitation is in accordance with federal anti-backsliding regulations (see section IV.D.3 of the Fact Sheet).

vi. **Copper**

(a) **WQO.** The CTR includes hardness dependent criteria for the protection of freshwater aquatic life for copper. These criteria for copper are presented in dissolved concentrations, as 1-hour acute criteria and 4-day chronic criteria. USEPA recommends conversion factors to translate dissolved concentrations to total concentrations. Default USEPA translators were used for the receiving water and effluent.

(b) **RPA Results.** Section IV.C.2.d of this Fact Sheet includes procedures for conducting the RPA for hardness-dependent CTR metals, such as copper. The CTR includes hardness-dependent criteria for copper for the receiving water. The RPA was conducted using the upstream receiving water hardness to calculate the criteria for comparison to the maximum ambient background concentration, and likewise using the reasonable worst-case downstream hardness to compare the MEC. The Discharger submitted a Copper Water Effects Ratio (WER) study along with their Report of Waste Discharge (ROWD) in August 2013 that calculated a site specific WER of 7.55 that is applicable to the effluent. The table below shows the specific total recoverable criteria used for the RPA.

Table F-10. Total Recoverable Copper RPA

	CTR Chronic Criteria[1]	CTR Acute Criteria[1]	Maximum Concentration	Reasonable Potential? (Y/N)
Receiving Water	4.2 µg/L	5.8 µg/L	1 µg/L	No
Effluent	53 µg/L	76 µg/L	15 µg/L	No

[1] A Water Effects Ratio of 7.55 has been applied in order to calculate the effluent copper criteria.

Based on the available data, copper in the discharge does not have a reasonable potential to cause or contribute to an in-stream excursion above the CTR criteria for the protection of freshwater aquatic life and the effluent limitations for copper have not been retained in this Order. Removal of these effluent limitations is in accordance with federal anti-backsliding regulations (see section IV.D.3 of the Fact Sheet).

vii. **Diazinon**

(a) **WQO.** The Basin Plan requires the Central Valley Water Board to consider relevant numerical criteria and guidelines developed by other agencies in determining compliance with the narrative toxicity objective (Basin Plan, IV-17.00). The Department of Fish and Game established acute and chronic criteria for diazinon to protect freshwater aquatic life. The acute(1-hour

average) and chronic (4-day average) are 0.08 µg/L and 0.05 µg/L, respectively.

(b) **RPA Results.** Diazinon was not detected in the Facility's effluent at a MDL of 0.007 µg/L in 14 samples collected between December 2010 and April 2013. Diazinon was also not detected in the receiving water at a MDL of 0.007 µg/L in 4 samples collected during the Discharger's priority pollutant scan conducted between February 2012 and April 2012. Since diazinon and chlorpyrifos are additive, staff also evaluated effluent concentrations of chlorpyrifos. Chlorpyrifos was not detected at a MDL of 0.005 µg/L in the Facility's effluent or in the upstream receiving water in four samples collected during their priority pollutant scan. The monitoring results do not exhibit reasonable potential for diazinon and/or chlorpyrifos to cause or contribute to an in-stream excursion above the Department of Fish and Game acute and chronic criteria for diazinon to protect freshwater aquatic life. The receiving water is in the Sierra Foothills and is tributary to the Delta. The TMDL for diazinon and chlorpyrifos for the Sacramento-San Joaquin Delta Waterways does not apply to its tributaries, therefore, no effluent limitations for diazinon and/or chlorpyrifos are retained in this Order. Removal of these effluent limitations is in accordance with federal anti-backsliding regulations (see section IV.D.3 of the Fact Sheet).

viii. **Dichlorobromomethane**

(a) **WQO.** The CTR includes a criterion of 46 µg/L for dichlorobromomethane (DCBM) for the protection of fish fit for consumption by humans in waters other than drinking water sources.

(b) **RPA Results.** The maximum effluent concentration (MEC) for DCBM was 4.0 µg/L based on 14 samples collected between December 2010 and April 2013, while the maximum observed upstream receiving water concentration was a j-flag estimation of 0.08 µg/L based on 4 samples collected during the Discharger's priority pollutant scan conducted between February 2012 and April 2012. Therefore, DCBM in the discharge does not exhibit reasonable potential to cause or contribute to an in-stream excursion above the CTR criterion and the effluent limitation for DCBM has not been retained in this Order. Removal of the effluent limitations is in accordance with federal anti-backsliding regulations (see section IV.D.3 of the Fact Sheet).

ix. **Iron**

(a) **WQO.** The USEPA developed NAWQC for protection of freshwater aquatic life for iron. The recommended 4-day average (chronic) criteria for iron is 1000 µg/L.

(b) **RPA Results.** The maximum observed effluent concentration for iron was 110 µg/L based on 14 samples collected between December 2010 and April 2013, while the maximum observed upstream receiving water concentration was estimated to be 200 µg/L based on 4 samples collected during the Discharger's priority pollutant scan conducted between February 2012 and April 2012. Therefore, the discharge does not demonstrate reasonable potential to cause or contribute to an in-stream excursion above the NAWQC for iron, and the effluent limitation for iron has not been retained in this Order. Removal of this effluent limitation is in accordance

with federal anti-backsliding regulations (see section IV.D.3 of the Fact Sheet).

x. **Salinity**

(a) **WQO.** Chloride, electrical conductivity (EC), total dissolved solids, and sulfate are all forms of salinity. There are no water quality criteria for the protection of aquatic life for electrical conductivity, total dissolved solids, and sulfate. The USEPA NAWQC criteria for chloride are 230 mg/L as a 4-day average and 860 mg/L as a 1-hour average.

(b) **RPA Results.**

(1) **Chloride.** Chloride concentrations in the effluent ranged from 40 mg/L to 48 mg/L, with an average of 45 mg/L, based on 4 samples collected during the Discharger's priority pollutant scan conducted between February 2012 and April 2012. Background concentrations in the North Fork Calaveras River ranged from 3.5 mg/L to 8.8 mg/L, with an average of 5.9 mg/L, based on 4 samples collected during the same period. These levels do not exhibit reasonable potential to cause or contribute to an excursion from the USEPA NAWQC for chloride.

(2) **Electrical Conductivity.** Not applicable.

(3) **Sulfate.** Not applicable.

(4) **Total Dissolved Solids.** Not applicable.

Based on the relatively low reported salinity, the discharge does not have reasonable potential to cause or contribute to an in-stream excursion of water quality objectives for salinity. However, since the Discharger discharges to the North Fork Calaveras River, a tributary of New Hogan Reservoir and eventually the Sacramento-San Joaquin Delta, of additional concern is the salt contribution to Delta waters. Allowing the Discharger to increase its current salt loading may be contrary to the Region-wide effort to address salinity in the Central Valley. Therefore, this Order includes a performance-based effluent limitation of 700 µmhos/cm for EC to be applied as a Surface Water Discharge Season average to limit the discharge to current levels. This performance-based effluent limitation represents the maximum average effluent EC concentration for a Surface Water discharge season using data from December 2010 through April 2013.

In order to ensure that the Discharger will continue to control the discharge of salinity, this Order includes a requirement to continue to implement the existing Salinity Evaluation and Minimization Plan that was submitted to the Central Valley Water Board in December 2009. Also water supply monitoring is required to evaluate the relative contribution of salinity from the source water to the effluent.

xi. **Settleable Solids.**

(a) **WQO.** For inland surface waters, the Basin Plan states that *"[w]ater shall not contain substances in concentrations that result in the deposition of material that causes nuisance or adversely affects beneficial uses."* Order

R5-2009-0007 established an AMEL of 0.1 ml/L and an MDEL of 0.2 ml/L for settleable solids to implement the narrative settleable solids objective.

(b) **RPA Results.** Since implementation of the tertiary upgrades, weekly monitoring did not detect settleable solids at a detection level of 0.1 ml/L in any of the 53 samples collected between December 2010 and April 2013. Therefore, settleable solids does not exhibit reasonable potential to cause or contribute to an in-stream excursion above the narrative objective and effluent limits for settleable solids have not been retained in this Order. Removal of the effluent limitations is in accordance with federal anti-backsliding regulations (see section IV.D.3 of the Fact Sheet).

xii. **Zinc**

(a) **WQO.** The CTR includes hardness-dependent criteria for the protection of freshwater aquatic life for zinc. These criteria for zinc are presented in dissolved concentrations, as 1-hour acute criteria and 4-day chronic criteria. USEPA recommends conversion factors to translate dissolved concentrations to total concentrations. Default USEPA translators were used for the receiving water and effluent.

(c) **RPA Results.** Section IV.C.2.d of this Fact Sheet includes procedures for conducting the RPA for hardness-dependent CTR metals, such as zinc. The CTR includes hardness-dependent criteria for zinc for the receiving water. The RPA was conducted using the upstream receiving water hardness to calculate the criteria for comparison to the maximum ambient background concentration, and likewise using the reasonable worst-case downstream hardness to compare the MEC. The table below shows the specific total recoverable criteria used for the RPA.

Table F-11. Total Recoverable Zinc RPA

	CTR Chronic Criteria	CTR Acute Criteria	Maximum Concentration	Reasonable Potential? (Y/N)
Receiving Water	54 µg/L	54 µg/L	< 0.7 µg/L	No
Effluent	90 µg/L	90 µg/L	87 µg/L	No

Based on the available data, zinc in the discharge does not have a reasonable potential to cause or contribute to an in-stream excursion above the CTR criteria for the protection of freshwater aquatic life and the effluent limitations have not been retained. Removal of these effluent limitations is in accordance with federal anti-backsliding regulations (see section IV.D.3 of the Fact Sheet).

b. **Constituents with No Data or Insufficient Data.** Reasonable potential cannot be determined for the following constituents because effluent data are limited or ambient background concentrations are not available. The Discharger is required to continue to monitor for these constituents in the effluent using analytical methods that provide the best feasible detection limits. When additional data become available, further analysis will be conducted to determine whether to add numeric effluent limitations or to continue monitoring.

i. **2,4,5-TP (Silvex), 2,4-D, Dalapon, and Dinoseb.** The Effluent and Receiving water Characterization Study conducted in February 2012 through April 2012

indicated that the persistent chlorinated hydrocarbon pesticides 2,4,5-TP (Silvex), 2,4-D, Dalapon, and Dinoseb were all detected in the Facility's effluent at estimated levels (J-flagged), see Table F-11 below. The Basin Plan contains a WQO for persistent chlorinated hydrocarbon pesticides of non-detect. The laboratory did not report any QA/QC issues with the samples. However, because there are no known sources of pesticides in the Discharger's collection system, there is uncertainty whether the pesticides are actually present. This Order requires a constituent study for 2,4,5-TP (Silvex), 2,4-D, Dalapon, and Dinoseb in order to conduct further analysis of the existence of reasonable potential for these constituents.

Table F-12: Summary of persistent chlorinated hydrocarbon pesticides detected in effluent.

Constituent Name	Units	MDL	Date	Effluent Results	Background results
2,4,5-TP (Silvex)	µg/L	0.02	2/15/2012	ND	ND
			3/7/2012	0.082 J	ND
			4/4/2012	ND	ND
			4/18/2012	ND	ND
2,4-D	µg/L	0.03	2/15/2012	ND	ND
			3/7/2012	ND	ND
			4/4/2012	0.098 J	0.075 J
			4/18/2012	ND	ND
Dalapon	µg/L	0.1	2/15/2012	0.46 J	ND
			3/7/2012	0.99 J	ND
			4/4/2012	0.67 J	ND
			4/18/2012	0.23 J	ND
Dinoseb	µg/L	0.02	2/15/2012	ND	ND
			3/7/2012	0.043 J	ND
			4/4/2012	ND	ND
			4/18/2012	ND	ND

c. **Constituents with Reasonable Potential.** The Central Valley Water Board finds that the discharge has a reasonable potential to cause or contribute to an in-stream excursion above a water quality standard for **ammonia, chlorine residual, cyanide, pathogens, and pH.** WQBEL's for these constituents are included in this Order. A summary of the RPA is provided in Attachment G, and a detailed discussion of the RPA for each constituent is provided below.

i. **Ammonia**

(a) **WQO.** In August 2013, U.S. EPA updated its National Ambient Water Quality Criteria (NAWQC) for the protection of freshwater aquatic life for total ammonia[1]. The 2013 NAWQC for ammonia recommends acute (1-

[1] Aquatic Life Ambient Water Quality Criteria for Ammonia – Freshwater, published August 2013 [EPA 822-R-13-001]

hour average; criteria maximum concentration or CMC) and chronic (30-day average; criteria continuous concentration or CCC) standards that vary based on pH and temperature. U.S. EPA also recommends that no 4-day average concentration should exceed 2.5 times the 30-day CCC. The 2013 NAWQC for ammonia takes into account data for several sensitive freshwater mussel species and non-pulmonate snails that had not previously been tested.

The 2013 ammonia NAWQC document states that "*unionid mussel species are not prevalent in some waters, such as the arid west.*" The 2013 ammonia NAWQC also states that, "*In the case of ammonia, where a state demonstrates that mussels are not present on a site-specific basis, the recalculation procedure may be used to remove the mussel species from the national criteria dataset to better represent the species present at the site.*" The 2013 ammonia NAWQC document, therefore, includes a recalculation procedure for acute and chronic criteria for waters where mussels are not present. The 2013 ammonia NAWQC also provides criteria for waters where *Oncorhynchus* species are not present and where protection of early life stages of fish genera is unnecessary.

The North Fork Calaveras River has a beneficial use of cold freshwater habitat (COLD) and the presence of salmonids and early fish life stages in the North Fork Calaveras River is well-documented, therefore, the recommended ammonia criteria for waters where salmonids and early life stages are present were used. In addition, site-specific ammonia criteria for waters where mussels are absent were used. A report prepared by The Nature Conservancy, *Sensitive Freshwater Mussel Surveys in the Pacific Southwest Region: Assessment of Conservation Status (*published August 2010), demonstrates the results of a strategic mussel study and survey conducted during 2008-2009. The study does not contain any survey information for the North Fork Calaveras River in the vicinity of the Facility discharge.

The Central Valley Water Board is currently in the process of determining the best way to evaluate receiving waters within the Central Valley for the presence/absence of mussels. The Central Valley Water Board's Executive Officer issued a California Water Code § 13267 letter on 3 April 2014, requiring the Discharger evaluate whether more restrictive ammonia criteria for unionid mussels are applicable to the discharge. The 13267 letter requires the Discharger to either conduct a mussel study to determine the presence/absence of mussels in the receiving water, or propose a plan to comply with the ammonia criteria based on mussels present. This Order may be reopened to modify the ammonia requirements based the results of this evaluation.

(b) **RPA Results.** The Facility is a POTW that treats domestic wastewater. Untreated domestic wastewater contains ammonia in concentrations that, without treatment, would be harmful to fish and would violate the Basin Plan narrative toxicity objective if discharged to the receiving water. Reasonable potential therefore exists and effluent limitations are required.

Federal regulations at 40 C.F.R. §122.44(d)(1)(i) requires that, "Limitations must control all pollutants or pollutant parameters (either conventional, nonconventional, or toxic pollutants) which the Director determines are or may be discharged at a level which will cause, have the reasonable potential to cause, or contribute to an excursion above any State water quality standard, including State narrative criteria for water quality." For priority pollutants, the SIP dictates the procedures for conducting the RPA. Ammonia is not a priority pollutant. Therefore, the Central Valley Water Board is not restricted to one particular RPA method. Due to the site-specific conditions of the discharge, the Central Valley Water Board has used professional judgment in determining the appropriate method for conducting the RPA for this non-priority pollutant constituent.

USEPA's September 2010 NPDES Permit Writer's Manual, page 6-30, states, "State implementation procedures might allow, or even require, a permit writer to determine reasonable potential through a qualitative assessment process without using available facility-specific effluent monitoring data or when such data are not available…A permitting authority might also determine that WQBEL's are required for specific pollutants for all facilities that exhibit certain operational or discharge characteristics (e.g., WQBEL's for pathogens in all permits for POTW's discharging to contact recreational waters)." USEPA's TSD also recommends that factors other than effluent data should be considered in the RPA, "When determining whether or not a discharge causes, has the reasonable potential to cause, or contributes to an excursion of a numeric or narrative water quality criterion for individual toxicants or for toxicity, the regulatory authority can use a variety of factors and information where facility-specific effluent monitoring data are unavailable. These factors also should be considered with available effluent monitoring data." With regard to POTW's, USEPA recommends that, "POTW's should also be characterized for the possibility of chlorine and ammonia problems." (TSD, p. 50)

Nitrification is a biological process that converts ammonia to nitrite and nitrite to nitrate. The Discharger currently uses nitrification to remove ammonia from the waste stream. Inadequate or incomplete nitrification may result in the discharge of ammonia to the receiving stream. Ammonia is known to cause toxicity to aquatic organisms in surface waters. Discharges of ammonia in concentrations that produce detrimental physiological responses to human, plant, animal, or aquatic life would violate the Basin Plan narrative toxicity objective. Although the Discharger nitrifies the discharge, inadequate or incomplete nitrification creates the potential for ammonia to be discharged and provides the basis for the discharge to have a reasonable potential to cause or contribute to an in-stream excursion above the NAWQC. Therefore, the Central Valley Water Board finds the discharge has reasonable potential for ammonia and WQBEL's are required.

(c) **WQBEL's.** The Central Valley Water Board calculates WQBEL's in accordance with SIP procedures for non-CTR constituents, and ammonia is a non-CTR constituent. The SIP procedure assumes a 4-day averaging period for calculating the long-term average discharge condition (LTA).

However, USEPA recommends modifying the procedure for calculating permit limits for ammonia using a 30-day averaging period for the calculation of the LTA corresponding to the 30-day CCC. Therefore, while the LTAs corresponding to the acute and 4-day chronic criteria were calculated according to SIP procedures, the LTA corresponding to the 30-day CCC was calculated assuming a 30-day averaging period. The lowest LTA representing the acute, 4-day CCC, and 30-day CCC is then selected for deriving the average monthly effluent limitation (AMEL) and the maximum daily effluent limitation (MDEL). The remainder of the WQBEL calculation for ammonia was performed according to the SIP procedures. This Order contains a final average monthly effluent limitation (AMEL) and maximum daily effluent limitation (MDEL) for ammonia of 1.8 mg/L and 3.6 mg/L, respectively, based on the NAWQC. This Order also contains mass based AMEL and MDEL for ammonia of 23 lbs/day and 45lbs/day, respectively, to control the loading because ammonia is an oxygen-demanding substance.

(d) **Plant Performance and Attainability.** Analysis of the effluent data shows that of 40 samples collected between December 2010 and April 2013 the MEC was an estimated (J-flag) concentration of 0.26 mg/L is less than the applicable WQBEL's. The Central Valley Water Board concludes, therefore, that immediate compliance with these effluent limitations is feasible.

ii. **Chlorine Residual**

(a) **WQO.** USEPA developed NAWQC for protection of freshwater aquatic life for chlorine residual. The recommended 4-day average (chronic) and 1-hour average (acute) criteria for chlorine residual are 0.011 mg/L and 0.019 mg/L, respectively. These criteria are protective of the Basin Plan's narrative toxicity objective.

(b) **RPA Results.** The concentrations of chlorine used to disinfect wastewater are high enough to harm aquatic life and violate the Basin Plan narrative toxicity objective if discharged to the receiving water. Reasonable potential therefore does exist and effluent limits are required.

Federal regulations at 40 C.F.R. §122.44(d)(1)(i) requires that, "Limitations must control all pollutants or pollutant parameters (either conventional, nonconventional, or toxic pollutants) which the Director determines are or may be discharged at a level which will cause, have the reasonable potential to cause, or contribute to an excursion above any State water quality standard, including State narrative criteria for water quality." For priority pollutants, the SIP dictates the procedures for conducting the RPA. Chlorine is not a priority pollutant. Therefore, the Central Valley Water Board is not restricted to one particular RPA method. Due to the site-specific conditions of the discharge, the Central Valley Water Board has used its judgment in determining the appropriate method for conducting the RPA for this non-priority pollutant constituent.

USEPA's September 2010 NPDES Permit Writer's Manual, page 6-30, states, "State implementation procedures might allow, or even require, a permit writer to determine reasonable potential through a qualitative assessment process without using available facility-specific effluent

monitoring data or when such data are not available…A permitting authority might also determine that WQBEL's are required for specific pollutants for all facilities that exhibit certain operational or discharge characteristics (e.g., WQBEL's for pathogens in all permits for POTW's discharging to contact recreational waters)." USEPA's TSD also recommends that factors other than effluent data should be considered in the RPA, "When determining whether or not a discharge causes, has the reasonable potential to cause, or contributes to an excursion of a numeric or narrative water quality criterion for individual toxicants or for toxicity, the regulatory authority can use a variety of factors and information where facility-specific effluent monitoring data are unavailable. These factors also should be considered with available effluent monitoring data." With regard to POTW's, USEPA recommends that, "POTW's should also be characterized for the possibility of chlorine and ammonia problems." (TSD, p. 50)

The Discharger uses chlorine for disinfection, which is extremely toxic to aquatic organisms. Although the Discharger uses a sulfur dioxide process to dechlorinate the effluent prior to discharge to Old River, the existing chlorine use and the potential for chlorine to be discharged provides the basis for the discharge to have a reasonable potential to cause or contribute to an in-stream excursion above the NAWQC.

(c) **WQBEL's.** The USEPA *Technical Support Document for Water Quality-Based Toxics Control* [EPA/505/2-90-001] contains statistical methods for converting chronic (4-day) and acute (1-hour) aquatic life criteria to average monthly and maximum daily effluent limitations based on the variability of the existing data and the expected frequency of monitoring. However, because chlorine is an acutely toxic constituent that can and will be monitored continuously, an average 1-hour limitation is considered more appropriate than an average daily limitation. This Order contains a 4-day average effluent limitation and 1-hour average effluent limitation for chlorine residual of 0.011 mg/L and 0.019 mg/L, respectively, based on USEPA's NAWQC, which implements the Basin Plan's narrative toxicity objective for protection of aquatic life.

(d) **Plant Performance and Attainability.** Analysis of the effluent data shows that the MEC of 0.01 mg/L is less than the applicable WQBEL's. The Central Valley Water Board concludes, therefore, that immediate compliance with these effluent limitations is feasible.

iii. **Cyanide**

(a) **WQO.** The CTR includes maximum 1-hour average and 4-day average cyanide criteria of 22 µg/L and 5.2µg/L, respectively, for the protection of freshwater aquatic life.

(b) **RPA Results.** The MEC for cyanide was 11 µg/L, based on 14 samples collected between December 2010 and April 2013, while the maximum cyanide concentration in the receiving water was 1.0 µg/L, based on 4 samples collected during the Discharger's priority pollutant scan conducted between February 2012 and April 2012. Therefore, the discharge exhibits reasonable potential to cause or contribute to an in-

stream excursion from the CTR criteria for the protection of aquatic life for cyanide. An MDEL and AMEL for cyanide of 9.4 µg/L and 3.8 µg/L, respectively, are included in this Order based on CTR criteria for the protection of freshwater aquatic life.

(c) **Plant Performance and Attainability.** Analysis of the effluent data shows that the MEC of 11 µg/L is greater than applicable WQBEL's. Based on the sample results for the effluent, the limitations appear to put the Discharger in immediate non-compliance. TSO R5-2014-0900-01 provides a compliance schedule to achieve compliance with the final effluent limitations for cyanide by 1 December 2018.

xiii. **Pathogens**

(a) **WQO.** In a letter to the Central Valley Water Board dated 8 April 1999, DPH indicated it would consider wastewater discharged to water bodies with identified beneficial uses of irrigation or contact recreation and where the wastewater receives dilution of more than 20:1 to be adequately disinfected if the effluent coliform concentration does not exceed 23 MPN/100 mL as a 7-day median and if the effluent coliform concentration does not exceed 240 MPN/100 mL more than once in any 30 day period.

(b) **RPA Results.** Raw domestic wastewater inherently contains human pathogens that threaten human health and life, and constitute a threatened pollution and nuisance under CWC Section 13050 if discharged untreated to the receiving water. Reasonable potential for pathogens therefore exists and WQBELs are required.

Federal regulations at 40 C.F.R. §122.44(d)(1)(i) requires that, "Limitations must control all pollutants or pollutant parameters (either conventional, nonconventional, or toxic pollutants) which the Director determines are or may be discharged at a level which will cause, have the reasonable potential to cause, or contribute to an excursion above any State water quality standard, including State narrative criteria for water quality." For priority pollutants, the SIP dictates the procedures for conducting the RPA. Pathogens are not priority pollutants. Therefore, the Central Valley Water Board is not restricted to one particular RPA method. Due to the site-specific conditions of the discharge, the Central Valley Water Board has used professional judgment in determining the appropriate method for conducting the RPA for this non-priority pollutant constituent.

USEPA's September 2010 NPDES Permit Writer's Manual, page 6-30, states, "State implementation procedures might allow, or even require, a permit writer to determine reasonable potential through a qualitative assessment process without using available facility-specific effluent monitoring data or when such data are not available…A permitting authority might also determine that WQBELs are required for specific pollutants for all facilities that exhibit certain operational or discharge characteristics (e.g., WQBELs for pathogens in all permits for POTWs discharging to contact recreational waters)." USEPA's TSD also recommends that factors other than effluent data should be considered in the RPA, "When determining whether or not a discharge causes, has the reasonable potential to cause,

or contributes to an excursion of a numeric or narrative water quality criterion for individual toxicants or for toxicity, the regulatory authority can use a variety of factors and information where facility-specific effluent monitoring data are unavailable. These factors also should be considered with available effluent monitoring data." (TSD, p. 50)

The beneficial uses of the North Fork Calaveras River include water contact recreation. To protect these beneficial uses, the Central Valley Water Board finds that the wastewater must be disinfected and adequately treated to prevent disease. Although the Discharger provides disinfection, inadequate or incomplete disinfection creates the potential for pathogens to be discharged. Therefore, the Central Valley Water Board finds the discharge has reasonable potential for pathogens and WQBELs are required.

(c) **WQBEL's.** Pursuant to guidance from DPH, this Order includes effluent limitations for total coliform organisms of 23 MPN/100 mL as a 7-day median and 240 MPN/100 mL, not to be exceeded more than once in a 30-day period. These coliform limits are imposed to protect the beneficial uses of the receiving water, including public health through contact recreation and drinking water pathways.

(d) **Plant Performance and Attainability. .** Analysis of the effluent data shows that the MEC of 6.8 MPN/100 mL is less than the applicable WQBEL's. The Central Valley Water Board concludes, therefore, that immediate compliance with these effluent limitations is feasible.

xiv. **pH**

(a) **WQO.** The Basin Plan includes a water quality objective for surface waters (except for Goose Lake) that the *"…pH shall not be depressed below 6.5 nor raised above 8.5."*

(b) **RPA Results.** Raw domestic wastewater inherently has variable pH. Additionally, some wastewater treatment processes can increase or decrease wastewater pH which if not properly controlled, would violate the Basin Plan's numeric objective for pH in the receiving water. Therefore, reasonable potential exists for pH and WQBEL's are required.

Federal regulations at 40 C.F.R. §122.44(d)(1)(i) requires that, "Limitations must control all pollutants or pollutant parameters (either conventional, nonconventional, or toxic pollutants) which the Director determines are or may be discharged at a level which will cause, have the reasonable potential to cause, or contribute to an excursion above any State water quality standard, including State narrative criteria for water quality." For priority pollutants, the SIP dictates the procedures for conducting the RPA. pH is not a priority pollutant. Therefore, the Central Valley Water Board is not restricted to one particular RPA method. Due to the site-specific conditions of the discharge, the Central Valley Water Board has used professional judgment in determining the appropriate method for conducting the RPA for this non-priority pollutant constituent.

USEPA's September 2010 NPDES Permit Writer's Manual, page 6-30, states, "State implementation procedures might allow, or even require, a permit writer to determine reasonable potential through a qualitative

assessment process without using available facility-specific effluent monitoring data or when such data are not available…A permitting authority might also determine that WQBEL's are required for specific pollutants for all facilities that exhibit certain operational or discharge characteristics (e.g., WQBEL's for pathogens in all permits for POTW's discharging to contact recreational waters)." USEPA's TSD also recommends that factors other than effluent data should be considered in the RPA, "When determining whether or not a discharge causes, has the reasonable potential to cause, or contributes to an excursion of a numeric or narrative water quality criterion for individual toxicants or for toxicity, the regulatory authority can use a variety of factors and information where facility-specific effluent monitoring data are unavailable. These factors also should be considered with available effluent monitoring data." (TSD, p. 50)

The Facility is a POTW that treats domestic wastewater. Although the Discharger has proper pH controls in place, the pH for the Facility's influent varies due to the nature of municipal sewage, which provides the basis for the discharge to have a reasonable potential to cause or contribute to an in-stream excursion above the Basin Plan's numeric objective for pH in the receiving water. Therefore, WQBEL's for pH are required in this Order.

(c) **WQBEL's.** Effluent limitations for pH of 6.5 as an instantaneous minimum and 8.5 as an instantaneous maximum are included in this Order based on protection of the Basin Plan objectives for pH.

(d) **Plant Performance and Attainability.** Based on 274 samples taken from December 2010 to April 2013, the maximum pH reported was 8.3 and the minimum was 6.4, with only one occurrence of pH falling below the instantaneous minimum. The Central Valley Water Board concludes, therefore, that immediate compliance with these effluent limitations is feasible.

4. WQBEL Calculations

a. This Order includes WQBEL's for ammonia, BOD_5, chlorine residual, cyanide, pathogens, pH, salinity, and total suspended solids. The general methodology for calculating WQBEL's based on the different criteria/objectives is described in subsections IV.C.5.b through e, below. See Attachment H for the WQBEL calculations.

b. **Effluent Concentration Allowance.** For each water quality criterion/objective, the ECA is calculated using the following steady-state mass balance equation from Section 1.4 of the SIP:

$$ECA = C + D(C - B) \quad \text{where } C>B, \text{ and}$$
$$ECA = C \quad \text{where } C \leq B$$

where:

ECA = effluent concentration allowance
D = dilution credit

C = the priority pollutant criterion/objective
B = the ambient background concentration.

According to the SIP, the ambient background concentration (B) in the equation above shall be the observed maximum with the exception that an ECA calculated from a priority pollutant criterion/objective that is intended to protect human health from carcinogenic effects shall use the arithmetic mean concentration of the ambient background samples. For ECAs based on MCLs, which implement the Basin Plan's chemical constituents objective and are applied as annual averages, an arithmetic mean is also used for B due to the long-term basis of the criteria.

c. **Basin Plan Objectives and MCLs.** For WQBEL's based on site-specific numeric Basin Plan objectives or MCLs, the effluent limitations are applied directly as the ECA as either an MDEL, AMEL, or average annual effluent limitations, depending on the averaging period of the objective.

d. **Aquatic Toxicity Criteria.** WQBEL's based on acute and chronic aquatic toxicity criteria are calculated in accordance with Section 1.4 of the SIP. The ECAs are converted to equivalent long-term averages (i.e. LTAacute and LTAchronic) using statistical multipliers and the lowest LTA is used to calculate the AMEL and MDEL using additional statistical multipliers.

e. **Human Health Criteria.** WQBEL's based on human health criteria, are also calculated in accordance with Section 1.4 of the SIP. The AMEL are set equal to the ECA and a statistical multiplier was used to calculate the MDEL.

$$AMEL = mult_{AMEL}\left[\min\left(\overbrace{M_A ECA_{acute}}^{LTA_{acute}}, M_C ECA_{chronic}\right)\right]$$

$$MDEL = mult_{MDEL}\left[\min\left(M_A ECA_{acute}, \underbrace{M_C ECA_{chronic}}_{LTA_{chronic}}\right)\right]$$

$$MDEL_{HH} = \left(\frac{mult_{MDEL}}{mult_{AMEL}}\right) AMEL_{HH}$$

where:
$mult_{AMEL}$ = statistical multiplier converting minimum LTA to AMEL
$mult_{MDEL}$ = statistical multiplier converting minimum LTA to MDEL
M_A = statistical multiplier converting acute ECA to LTA_{acute}
M_C = statistical multiplier converting chronic ECA to $LTA_{chronic}$

Summary of Water Quality-Based Effluent Limitations

Table F-13 Summary of Water Quality-Based Effluent Limitations

Parameter	Units	Effluent Limitations				
		Average Monthly	Average Weekly	Maximum Daily	Instantaneous Minimum	Instantaneous Maximum
Conventional Pollutants						
pH	Standard units	--	--	--	6.5	8.5
Priority Pollutants						
Cyanide, Total (as CN)	µg/L	3.8	--	9.4	--	--
Non-Conventional Pollutants						
Ammonia Nitrogen, Total (as N)	mg/L	1.8	--	3.6	--	--
	lbs/day[1]	23	--	45	--	--
Chlorine, Total Residual	mg/L		0.011[3]	0.019[4]	--	--
Electrical Conductivity @ 25°C	µmhos/cm	700[2]	--	--	--	--
Total Coliform Organisms	MPN/100 mL		23[5]	240[6]	--	--

1 Based upon a permitted flow of 1.5 MGD.
2 Applied as an annual average effluent limitation.
3 Applied as a 4-day average effluent limitation.
4 Applied as a 1-hour average effluent limitation.
5 Applied as a 7-day median effluent limitation.
6 Not to be exceeded more than once in any 30-day period.

5. Whole Effluent Toxicity (WET)

For compliance with the Basin Plan's narrative toxicity objective, this Order requires the Discharger to conduct whole effluent toxicity testing for acute and chronic toxicity, as specified in the Monitoring and Reporting Program (Attachment E section V.). This Order also contains effluent limitations for acute toxicity and requires the Discharger to implement best management practices to investigate the causes of, and identify corrective actions to reduce or eliminate effluent toxicity.

a. **Acute Aquatic Toxicity.** The Basin Plan contains a narrative toxicity objective that states, "All waters shall be maintained free of toxic substances in concentrations that produce detrimental physiological responses in human, plant, animal, or aquatic life." (Basin Plan at page III-8.00) The Basin Plan also states that, "…effluent limits based upon acute biotoxicity tests of effluents will be prescribed where appropriate…".

For priority pollutants, the SIP dictates the procedures for conducting the RPA. Acute toxicity is not a priority pollutant. Therefore, the Central Valley Water Board is not restricted to one particular RPA method. Acute whole effluent toxicity is not a priority pollutant. Therefore, due to the site-specific conditions of the discharge, the Central Valley Water Board has used professional judgment in determining the appropriate method for conducting the RPA. USEPA's September 2010 NPDES Permit Writer's Manual, page 6-30, states, "*State implementation procedures might allow, or even require, a permit writer to determine reasonable potential through a*

qualitative assessment process without using available facility-specific effluent monitoring data or when such data are not available…A permitting authority might also determine that WQBEL's are required for specific pollutants for all facilities that exhibit certain operational or discharge characteristics (e.g., WQBEL's for pathogens in all permits for POTW's discharging to contact recreational waters)." Although the discharge has been consistently in compliance with the acute effluent limitations, the Facility is a POTW that treats domestic wastewater containing ammonia and other acutely toxic pollutants. Acute toxicity effluent limits are required to ensure compliance with the Basin Plan's narrative toxicity objective.

USEPA Region 9 provided guidance for the development of acute toxicity effluent limitations in the absence of numeric water quality objectives for toxicity in its document titled "Guidance for NPDES Permit Issuance", dated February 1994. In section B.2. "Toxicity Requirements" (pgs. 14-15) it states that, "In the absence of specific numeric water quality objectives for acute and chronic toxicity, the narrative criterion 'no toxics in toxic amounts' applies. Achievement of the narrative criterion, as applied herein, means that ambient waters shall not demonstrate for acute toxicity: 1) less than 90% survival, 50% of the time, based on the monthly median, or 2) less than 70% survival, 10% of the time, based on any monthly median. For chronic toxicity, ambient waters shall not demonstrate a test result of greater than 1 TUc." Accordingly, effluent limitations for acute toxicity have been included in this Order as follows:

Acute Toxicity. Survival of aquatic organisms in 96-hour bioassays of undiluted waste shall be no less than:

Minimum for any one bioassay ---------- 70%
Median for any three consecutive bioassays ---------- 90%

b. **Chronic Aquatic Toxicity.** The Basin Plan contains a narrative toxicity objective that states, "All waters shall be maintained free of toxic substances in concentrations that produce detrimental physiological responses in human, plant, animal, or aquatic life." (Basin Plan at page III-8) Based on chronic WET testing performed by the Discharger from April 2010 through March 2014, the discharge has reasonable potential to cause or contribute to an in-stream excursion above of the Basin Plan's narrative toxicity objective**.** As shown in Table F-13 below.

Table F-14. Whole Effluent Chronic Toxicity Testing Results

	Fathead Minnow		**Water Flea**		**Green Algae**
	Pimephales promelas		*Ceriodaphnia dubia*		*Selenastrum capricornutum*
Date	Survival (TUc)	Growth (TUc)	Survival (TUc)	Reproduction (TUc)	Growth (TUc)
4/9/2010	1	1	1	1	1
1/25/2011	1	1	1	1	1
12/11/2012	1	1	1	1	1
1/23/2013	1	1	1	1	1
3/31/2014	1	1	1	>1	1

The Monitoring and Reporting Program of this Order requires seasonal chronic WET monitoring for demonstration of compliance with the narrative toxicity objective. In addition to WET monitoring, the Special Provision in section VI.C.2.a of the Order requires the Discharger to continue the implementation of the previously submitted TRE Workplan approved by the Executive Officer, to ensure the Discharger has a plan to immediately move forward with the initial tiers of a TRE, in the event effluent toxicity is encountered in the future. The provision also includes a numeric toxicity monitoring trigger, requirements for accelerated monitoring, and requirements for TRE initiation if toxicity is demonstrated.

To ensure compliance with the Basin Plan's narrative toxicity objective, the Discharger is required to conduct chronic WET testing, as specified in the Monitoring and Reporting Program (Attachment E section V.). Furthermore, the Special Provision contained at VI.C.2.a. of this Order requires the Discharger to investigate the causes of, and identify and implement corrective actions to reduce or eliminate effluent toxicity. If the discharge demonstrates toxicity exceeding the numeric toxicity monitoring trigger, the Discharger is required to initiate a Toxicity Reduction Evaluation (TRE) in accordance with the previously approved TRE work plan. The numeric toxicity monitoring trigger is not an effluent limitation; it is the toxicity threshold at which the Discharger is required to perform accelerated chronic toxicity monitoring, as well as, the threshold to initiate a TRE if effluent toxicity has been demonstrated.

This Order includes Discharge Prohibition III.F, which prohibits discharges to surface water when the flow ratio is less than 20:1 (river: effluent). The Discharger conducted a mixing zone study and submitted the study results in June 2004. The mixing zone study consisted of a dye study using a prototype diffuser operated at 20:1 flow ratio. The study demonstrated the initial mixing from the diffuser is about 6:1, with complete mixing (i.e., 20:1 dilution) within 12 feet of the discharge. Since the discharge cannot occur at a flow ratio less than 20:1 and there is substantial initial mixing, this Order includes a numeric toxicity trigger of >4 TUc. The numeric toxicity trigger and toxicity provisions ensure compliance with the Basin Plan's narrative toxicity objective.

D. Final Effluent Limitation Considerations

1. Mass-based Effluent Limitations

40 CFR 122.45(f)(1) requires effluent limitations be expressed in terms of mass, with some exceptions, and 40 CFR 122.45(f)(2) allows pollutants that are limited in terms of mass to additionally be limited in terms of other units of measurement. This Order includes effluent limitations expressed in terms of mass and concentration. In addition, pursuant to the exceptions to mass limitations provided in 40 CFR 122.45(f)(1), some effluent limitations are not expressed in terms of mass, such as pH and temperature, and when the applicable standards are expressed in terms of concentration (e.g., CTR criteria and MCLs) and mass limitations are not necessary to protect the beneficial uses of the receiving water.

Mass-based effluent limitations were calculated based upon the design flow (Average Dry Weather Flow) permitted in section IV.A.1.g of this Order.

2. Averaging Periods for Effluent Limitations

40 CFR 122.45 (d) requires average weekly and average monthly discharge limitations for publicly owned treatment works (POTW's) unless impracticable. However, for toxic

pollutants and pollutant parameters in water quality permitting, USEPA recommends the use of a maximum daily effluent limitation in lieu of average weekly effluent limitations for two reasons. "*First, the basis for the 7-day average for POTW's derives from the secondary treatment requirements. This basis is not related to the need for assuring achievement of water quality standards. Second, a 7-day average, which could comprise up to seven or more daily samples, could average out peak toxic concentrations and therefore the discharge's potential for causing acute toxic effects would be missed.*" (TSD, pg. 96) This Order uses maximum daily effluent limitations in lieu of average weekly effluent limitations for **ammonia and cyanide** as recommended by the TSD for the achievement of water quality standards and for the protection of the beneficial uses of the receiving stream. Furthermore, for **chlorine residual and pH,** weekly average effluent limitations have been replaced or supplemented with effluent limitations utilizing shorter averaging periods. The rationale for using shorter averaging periods for these constituents is discussed in section IV.C.3 of this Fact Sheet.

3. Satisfaction of Anti-Backsliding Requirements

The Clean Water Act specifies that a revised permit may not include effluent limitations that are less stringent than the previous permit unless a less stringent limitation is justified based on exceptions to the anti-backsliding provisions contained in Clean Water Act sections 402(o) or 303(d)(4), or, where applicable, 40 CFR 122.44(l).

The effluent limitations in this Order are at least as stringent as the effluent limitations in the previous Order, with the exception of effluent limitations for ammonia, bis(2-ethyhexyl)phthalate, chlordane, copper, diazinon, dichlorobromomethane, electrical conductivity, iron, settleable solids, and zinc. The effluent limitations for these pollutants are less stringent than those in Order R5-2009-0007. This relaxation of effluent limitations is consistent with the anti-backsliding requirements of the CWA and federal regulations.

For cyanide the effluent limits have changed from the previous permit, but the effluent limits are not less stringent. In this case, the waste load allocations (WLA)[1] in this Order and the previous Order are identical. The WLA provides a definition of effluent quality that is necessary to meet the water quality standards of receiving water and is used to derive water quality-based effluent limits (WQBEL's) that are used to enforce the WLA.

The TSD warns that, "*Direct use of a WLA as a permit limit creates a significant risk that the WLA will be enforced incorrectly, since effluent variability and the probability basis for the limit are not considered specifically.*" (TSD, p. 96) The SIP and TSD include identical procedures for calculating WQBEL's that use the statistical variability of the effluent to convert the WLA to average monthly and maximum daily effluent limits.

The new effluent data used to calculate WQBEL's for this Order has different statistical variability (i.e., coefficient of variation is different) than used in the previous Order. Changes in the coefficient of variation can result in small changes to the effluent limits. However, the slight changes in effluent limits do not allow for an increase in the pollutants discharged. The TSD states, "*Since effluents are variable and permit limits are developed based on a low probability of exceedence, the permit limits should consider effluent variability and ensure that the requisite loading from the WLA is not exceeded under normal conditions. In effect then, the limits must "force" treatment plant performance, which, after considering acceptable effluent variability, will only have a low statistical probability of exceeding the WLA and will achieve the desired loadings.*" (TSD,

[1] The WLA is equivalent to the Effluent Concentration Allowance used in the SIP (Section 1.4) for water quality-based effluent limit calculations.

p. 97) Therefore, although there are slight differences in the effluent limits, the WLA are identical, so the level of treatment needed to maintain compliance with the effluent limits remains the same. Consequently, the effluent limits are not less stringent than the previous Order, and there is no backsliding.

WQBEL's for cyanide were calculated based on the last three years of effluent data (December 2010 through April 2013). This dataset is representative of the Facility improvements and required monitoring frequency to meet the effluent limits in the previous permit. Therefore, Central Valley Water Board staff considers the last three years of effluent data to be the most representative and reliable dataset to use to determine current facility performance and development of WQBEL's.

a. **CWA section 402(o)(1) and 303(d)(4).** CWA section 402(o)(1) prohibits the establishment of less stringent water quality-based effluent limits "except in compliance with Section 303(d)(4)." CWA section 303(d)(4) has two parts: paragraph (A) which applies to nonattainment waters and paragraph (B) which applies to attainment waters.

   i. For waters where standards are not attained, CWA section 304(d)(4)(A) specifies that any effluent limit based on a TMDL or other WLA may be revised only if the cumulative effect of all such revised effluent limits based on such TMDL's or WLAs will assure the attainment of such water quality standards.

   ii. For attainment waters, CWA section 303(d)(4)(B) specifies that a limitation based on a water quality standard may be relaxed where the action is consistent with the antidegradation policy.

   The North Fork Calaveras River is considered an attainment water for ammonia, bis(2-ethyhexyl)phthalate, chlordane, copper, diazinon, dichlorobromomethane, electrical conductivity iron, settleable solids, and zinc because the receiving water is not listed as impaired on the 303(d) list for this constituent.[1] As discussed in section IV.D.4, below, removal of the effluent limits complies with federal and state antidegradation requirements. Thus, relaxation of the effluent limitations for ammonia, bis(2-ethyhexyl)phthalate, chlordane, copper, diazinon, dichlorobromomethane, electrical conductivity iron, settleable solids, and zinc from Order R5-2009-0007 meets the exception in CWA section 303(d)(4)(B).

b. **CWA section 402(o)(2)(B)(i).** CWA section 402(o)(2) provides several exceptions to the anti-backsliding regulations. CWA 402(o)(2)(B)(i) allows a renewed, reissued, or modified permit to contain a less stringent effluent limitation for a pollutant if information is available which was not available at the time of permit issuance (other than revised regulations, guidance, or test methods) and which would have justified the application of a less stringent effluent limitation at the time of permit issuance.

   As described further in section IV.C.3.b of this Fact Sheet, new information that was not available at the time Order R5-2009-0007 was issued indicates that bis(2-ethyhexyl)phthalate, chlordane, copper, diazinon, iron, settleable solids, and zinc do not exhibit reasonable potential to cause or contribute to an exceedance of water quality objectives in the receiving water. Furthermore, new USEPA NAWQC for ammonia was published in August 2013 resulting is less stringent effluent limits

[1] "The exceptions in Section 303(d)(4) address both waters in attainment with water quality standards and those not in attainment, i.e. waters on the section 303(d) impaired waters list." State Water Board Order WQ 2008-0006, Berry Petroleum Company, Poso Creek/McVan Facility.

for ammonia. The new information that supports the relaxation of effluent limitations for these constituents includes the following:

i. **Ammonia**. Previous Order R5-2009-0007 included WQBELs for ammonia based on USEPA's 1999 NAWQC for ammonia. USEPA published updated NAWQC for ammonia in August 2013. The WQBELs for ammonia have been recalculated based on the new criteria, using updated pH and temperature data for the upgraded Facility. The recalculated effluent limits for ammonia are less stringent. This is consistent with the federal antibacksliding regulations, because the new data and updated ammonia criteria represent new information that was not available at the time the previous Order was adopted.

ii. **Bis (2-ethylhexyl) Phthalate.** Previous Order R5-2009-0007 included WQBEL for bis-2for secondary discharges which allowed for dilution. Since the previous Order was adopted the Facility has been upgraded to provide tertiary filtration. New tertiary equivalent effluent and receiving water monitoring data collected between December 2010 and April 2013 for bis -2 indicates that the discharge does not exhibit reasonable potential to cause or contribute to an exceedance of the CTR criterion for Bis-2. Therefore, the effluent limits for bis-2 have been removed from this Order. This is consistent with the federal antibacksliding regulations, because the new data represent new information that was not available at the time the previous Order was adopted.

iii. **Chlordane.** Previous Order R5-2009-0007 included WQBELs for chlordane. New tertiary equivalent effluent and receiving water monitoring data collected between December 2010 and April 2013 for chlordane indicates that the discharge does not exhibit reasonable potential to cause or contribute to an exceedance of the CTR criteria, nor the Basin Plan WQO for persistent chlorinated hydrocarbon pesticides. Therefore, the effluent limits for chlordane have been removed from this Order. This is consistent with the federal antibacksliding regulations, because the new data represent new information that was not available at the time the previous Order was adopted.

iv. **Copper.** Previous Order R5-2009-0007 included WQBELs for copper. The Discharger submitted an approved Water Effects Ratio (WER) study for copper in August 2013 that calculated a site specific WER for copper of 7.55. The application of the WER for copper to the Reasonable Potential Analysis and tertiary equivalent effluent and receiving water monitoring data collected between December 2010 and April 2013 for copper indicates that the discharge does not exhibit reasonable potential to cause or contribute to an exceedance of the CTR freshwater aquatic life criteria. Therefore, the effluent limits for copper have been removed from this Order. This is consistent with the federal antibacksliding regulations, because the new data and WER study represent new information that was not available at the time the previous Order was adopted. The removal of copper effluent limits for the tertiary equivalent discharge is consistent with the state and federal Antidegradation requirements.

v. **Diazinon.** Previous Order R5-2009-0007 included WQBELs for diazinon. New tertiary equivalent effluent and receiving water monitoring data collected between December 2010 and April 2013 for diazinon indicates that the discharge does not exhibit reasonable potential to cause or contribute to an exceedance of the Department of Fish and Game criteria for diazinon for the protection freshwater aquatic life. Therefore, the effluent limits for diazinon have been removed from this Order. This is consistent with the federal

antibacksliding regulations, because the new data represent new information that was not available at the time the previous Order was adopted.

vi. **Iron.** Previous Order R5-2009-0007 included WQBELs for iron. New tertiary equivalent effluent and receiving water monitoring data collected between December 2010 and April 2013 for iron indicates that the discharge does not exhibit reasonable potential to cause or contribute to an exceedance of the NAWQC for protection of freshwater aquatic life for iron. Therefore, the effluent limits for iron have been removed from this Order. This is consistent with the federal antibacksliding regulations, because the new data represent new information that was not available at the time the previous Order was adopted.

vii. **Settleable Solids.** Previous Order R5-2009-0007 included WQBELs for settleable solids. New tertiary equivalent effluent and receiving water monitoring data collected between December 2010 and April 2013 for settleable solids indicates that the discharge does not exhibit reasonable potential to cause or contribute to an exceedance of the Basin Plan narrative objective for settleable solids. Therefore, the effluent limits for settleable solids have been removed from this Order. This is consistent with the federal antibacksliding regulations, because the new data represent new information that was not available at the time the previous Order was adopted.

viii. **Zinc.** Previous Order R5-2009-0007 included WQBELs for zinc. New tertiary equivalent effluent and receiving water monitoring data collected between December 2010 and April 2013 for zinc and updated hardness dataset indicates that the discharge does not exhibit reasonable potential to cause or contribute to an exceedance of the CTR hardness dependendent criteria for the protection of aquatic life for zinc. Therefore, the effluent limits for zinc have been removed from this Order. This is consistent with the federal antibacksliding regulations, because the new data represent new information that was not available at the time the previous Order was adopted.

c. **CWA section 402(o)(2)(B)(ii).** CWA section 402(o)(2) provides several exceptions to the anti-backsliding regulations. CWA 402(o)(2)(B)(ii) allows a renewed, reissued, or modified permit to contain a less stringent effluent limitation for a pollutant if technical mistakes or mistaken interpretations of law were made in issuing the permit.

Previous Order R5-2009-0007 applied municipal and domestic supply (MUN) as a beneficial use of the North Fork Calaveras River, which was a legal mistake. Table II-1 of the Basin Plan specifically identifies beneficial uses for the Calaveras River from source to New Hogan Reservoir and also for New Hogan Reservoir. MUN is not designated as a beneficial use for either waterbody. The previous Order mistakenly established the beneficial use, which cannot legally occur through a permitting action. To change the beneficial uses a Basin Plan amendment is required. Applying the correct designated beneficial uses results in the removal of effluent limits for dibromochloromethane. The removal of effluent limitations is consistent with the federal antibacksliding regulations, because a legal mistake was made in developing the previous Order.

4. Antidegradation Policies

This Order does not allow for an increase in flow or mass of pollutants to the receiving water. Therefore, a complete antidegradation analysis is not necessary. The Order requires compliance with applicable federal technology-based standards and with WQBEL's where the discharge could have the reasonable potential to cause or ontribute to an exceedance of water quality standards. The permitted discharge is consistent with the antidegradation provisions of 40 CFR 131.12 and State Water Board Resolution No. 68-16. Compliance with these requirements will result in the use of best practicable treatment or control of the discharge. The impact on existing water quality will be insignificant.

a. **Surface Water.** The permitted surface water discharge is consistent with the antidegradation provisions of 40 CFR 131.12 and State Water Board Resolution No. 68-16. Compliance with these requirements will result in the use of best practicable treatment or control of the discharge. The impact on existing water quality will be insignificant. The Facility was upgraded to include improved treatment (i.e., nitrification and tertiary filtration). This resulted in removal of effluent limitations. The effluent limitations for bis(2-ethyhexyl)phthalate, chlordane, copper, diazinon, dichlorobromomethane, iron, settleable solids, and zinc have not been carried forward from previous Order R5-2009-0007, and the effluent limitations for ammonia and electrical conductivity are less stringent. The relaxation of effluent limitations is consistent with the antidegradation provisions of 40 CFR 131.12 and State Water Board Resolution No. 68-16. Compliance with these requirements will result in the use of best practicable treatment or control of the discharge. The impact on existing water quality will be insignificant.

   The Discharger requested in the Cover Letter to their ROWD the authorization to discharge when effluent receives 3:1 dilution and an extension of the surface water discharge season. In order for the Central Valley Water Board to authorize these changes, the Discharger must submit a complete antidegradation analysis. Upon submission of an approved Dilution/Mixing Zone Study conducted using the requested 3:1 dilution ratio, an evaluation demonstrating that utilization of the additional land disposal does not mitigate the need for extension of the surface water discharge season and a complete antidegradation analysis, this Order may be reopened to revise the discharge prohibitions to allow discharges that do not receive 20:1 dilution, and include effluent limitations based on an appropriate dilution factor for the protection of aquatic life.

b. **Groundwater.** The Discharger utilizes holding ponds to store treated effluent and land application to the DLDA as a primary means of disposal. Domestic wastewater contains constituents such as total dissolved solids (TDS), specific conductivity, pathogens, nitrates, organics, metals and oxygen demanding substances (BOD). Percolation from the ponds and the DLDA may result in an increase in the concentration of these constituents in groundwater. The increase in the concentration of these constituents in groundwater must be consistent with Resolution No. 68-16. Any increase in pollutant concentrations in groundwater must be shown to be necessary to allow wastewater utility service necessary to accommodate housing and economic expansion in the area and must be consistent with maximum benefit to the people of the State of California. Some degradation of groundwater by the Discharger is consistent with Resolution No. 68-16 provided that:

   i. the degradation is limited in extent;

ii. the degradation after effective source control, treatment, and control is limited to waste constituents typically encountered in municipal wastewater as specified in the groundwater limitations in this Order;

iii. the Discharger minimizes the degradation by fully implementing, regularly maintaining, and optimally operating best practicable treatment and control (BPTC) measures; and

iv. the degradation does not result in water quality less than that prescribed in the Basin Plan.

This Order incorporates the Neilson Property into the DLDA in order to provide necessary storage and disposal capacity at the Facility. This Order retains groundwater limitations for total coliform in order to ensure that degradation of the groundwater underlying the DLDA does not occur.

5. Stringency of Requirements for Individual Pollutants

Water quality-based effluent limitations have been derived to implement water quality objectives that protect beneficial uses. Both the beneficial uses and the water quality objectives have been approved pursuant to federal law and are the applicable federal water quality standards. To the extent that toxic pollutant water quality-based effluent limitations were derived from the CTR, the CTR is the applicable standard pursuant to 40 C.F.R. section 131.38. The procedures for calculating the individual water quality-based effluent limitations for priority pollutants are based on the CTR implemented by the SIP, which was approved by U.S. EPA on May 18, 2000. All beneficial uses and water quality objectives contained in the Basin Plan were approved under state law and submitted to and approved by U.S. EPA prior to May 30, 2000. Any water quality objectives and beneficial uses submitted to U.S. EPA prior to May 30, 2000, but not approved by U.S. EPA before that date, are nonetheless “applicable water quality standards for purposes of the CWA” pursuant to 40 C.F.R. section 131.21(c)(1). Collectively, this Order’s restrictions on individual pollutants are no more stringent than required to implement the requirements of the CWA.

Summary of Final Effluent Limitations
Discharge Point No. EFF-001

Table F-15. Summary of Final Effluent Limitations

Parameter	Units	Effluent Limitations					
		Average Monthly	Average Weekly	Maximum Daily	Instantaneous Minimum	Instantaneous Maximum	Basis[1]
Flow	MGD	--	--	1.5[2]	--	--	DC
Conventional Pollutants							
Biochemical Oxygen Demand (5-day @ 20°C)	mg/L	30	45	60	--	--	
	lbs/day[3]	375	563	751	--	--	
	% Removal	85	--	--	--	--	
pH	S.U.	--	--	--	6.5	8.5	BP
Total Suspended Solids	mg/L	30	45	60	--	--	
	lbs/day[3]	375	563	751	--	--	
	% Removal	85	--	--	--	--	
Priority Pollutants							
Cyanide, Total (as CN)	µg/L	3.8	--	9.4	--	--	CTR
Non-Conventional Pollutants							
Ammonia Nitrogen, Total (as N)	mg/L	1.8	--	3.6	--	--	NAWQC
	lbs/day[3]	23	--	45	--	--	
Chlorine, Total Residual	mg/L	--	0.011[4]	0.019[5]			NAWQC
Electrical Conductivity @ 25°C	µmhos/cm	700[2]	--	--	--	--	BP
Total Coliform Organisms	MPN/100mL	--	23[6]	240[7]	--	--	

1. DC – Based on the design capacity of the Facility.
   BP – Based on water quality objectives contained in the Basin Plan.
   CTR – Based on water quality criteria contained in the California Toxics Rule and applied as specified in the SIP.
   NAWQC – Based on USEPA's National Ambient Water Quality Criteria for the protection of freshwater aquatic life.
2. The average daily discharge flow to the North Fork Calaveras River shall not exceed 1.5 MGD.
3. Based on permitted flow of 1.5 MGD.
4. Applied as a 4-day average effluent limitation.
5. Applied as a 1-hour average effluent limitation.
6. Applied as a 7-day median effluent limitation.
7. Not to be exceeded more than once in any 30-day period.

E. Interim Effluent Limitations – Not Applicable

F. Land Discharge Specifications

1. The Land Discharge Specifications are necessary to protect the beneficial uses of the groundwater and have been retained from Order No. R5-2009-0007 for dischargers to the DLDA. For purposes of this Order, the DLDA has been expanded to include the approximately 102 acre parcel of land adjacent to the Facility known as the "Neilson Property".

2. For nutrients such as nitrate, the potential for degradation to groundwater not only depends on the quality of treated effluent, but the ability of the vadose zone below the DLDA spray fields to provide an environment conductive to denitrification to convert the effluent to nitrate and the nitrate to nitrogen gas prior to effluent reaching the water table.

   The discharge to the spray fields has the potential to degrade groundwater with respect to nitrate. The water balance submitted to the Central Valley Water Board in April 2014 indicates an annual outfall potential of 28 MG of wastewater discharged to the spray fields in the DLDA. Based on an average total nitrogen concentration of 16 mg/L (December 2010 – April 2013), approximately 60 pounds per acre per year will be applied to the spray fields in the DLDA. The nutrient uptake rate for oak trees is unknown, however, grasses have a nutrient uptake rate of approximately 300 lb/ac/yr. Therefore, the current effluent nitrogen application rates are consistent with the vegetation grown, and represent best practical treatment and control. This Order sets a performance-based annual average land discharge total nitrogen limit of 34 mg/L to protect groundwater quality from the possible over application of nutrients.

G. Recycling Specifications – Not Applicable

V. RATIONALE FOR RECEIVING WATER LIMITATIONS

A. Surface Water

1. CWA section 303(a-c), requires states to adopt water quality standards, including criteria where they are necessary to protect beneficial uses. The Central Valley Water Board adopted water quality criteria as water quality objectives in the Basin Plan. The Basin Plan states that "[t]*he numerical and narrative water quality objectives define the least stringent standards that the Regional Water Board will apply to regional waters in order to protect the beneficial uses.*" The Basin Plan includes numeric and narrative water quality objectives for various beneficial uses and water bodies. This Order contains receiving surface water limitations based on the Basin Plan numerical and narrative water quality objectives for bacteria, biostimulatory substances, color, chemical constituents, dissolved oxygen, floating material, oil and grease, pH, pesticides, radioactivity, suspended sediment, settleable substances, suspended material, tastes and odors, temperature, toxicity, and turbidity.

B. Groundwater

1. The beneficial uses of the underlying groundwater are municipal and domestic supply, industrial service supply, industrial process supply, and agricultural supply.

2. Basin Plan water quality objectives include narrative objectives for chemical constituents, tastes and odors, and toxicity of groundwater. The toxicity objective requires that groundwater be maintained free of toxic substances in concentrations that produce detrimental physiological responses in humans, plants, animals, or aquatic life. The chemical constituent objective states groundwater shall not contain chemical constituents

in concentrations that adversely affect any beneficial use. The tastes and odors objective prohibits taste- or odor-producing substances in concentrations that cause nuisance or adversely affect beneficial uses. The Basin Plan also establishes numerical water quality objectives for chemical constituents and radioactivity in groundwaters designated as municipal supply. These include, at a minimum, compliance with MCLs in Title 22 of the CCR. The bacteria objective prohibits coliform organisms at or above 2.2 MPN/100 mL. The Basin Plan requires the application of the most stringent objective necessary to ensure that waters do not contain chemical constituents, toxic substances, radionuclides, taste- or odor-producing substances, or bacteria in concentrations that adversely affect municipal or domestic supply, agricultural supply, industrial supply or some other beneficial use.

3. pH, which ranged 6.4 to 8.3 standard units in the domestic wastewater, has the ability to degrade groundwater quality at this site because there is little potential for buffering in the shallow permeable vadose zone. According to Ayers and Westcot, pH less than 6.5 or greater than 8.4 can cause yield or vegetative growth reductions of sensitive crops if present in irrigation water, thereby impairing agricultural use of the water resource. The applicable water quality objective to protect the agricultural use from discharges of substances that affect pH is the narrative Chemical Constituents objective, which is applied following the “Policy of Application of Water Quality Objectives” in the Basin Plan. A numerical groundwater limitation range of 6.5 to 8.4 for pH, based on Ayers and Westcot, is relevant and appropriate to apply the narrative Chemical Constituents objective to protect unrestricted agricultural use of groundwater in the absence of information to support a less protective limit.

4. Groundwater limitations are required to protect the beneficial uses of the underlying groundwater.

VI. RATIONALE FOR PROVISIONS

A. Standard Provisions

Standard Provisions, which apply to all NPDES permits in accordance with 40 C.F.R. section 122.41, and additional conditions applicable to specified categories of permits in accordance with 40 C.F.R. section 122.42, are provided in Attachment D. The discharger must comply with all standard provisions and with those additional conditions that are applicable under section 122.42.

Sections 122.41(a)(1) and (b) through (n) of 40 C.F.R. establish conditions that apply to all state-issued NPDES permits. These conditions must be incorporated into the permits either expressly or by reference. If incorporated by reference, a specific citation to the regulations must be included in the Order. Section 123.25(a)(12) of 40 C.F.R. allows the state to omit or modify conditions to impose more stringent requirements. In accordance with 40 C.F.R. section 123.25, this Order omits federal conditions that address enforcement authority specified in 40 C.F.R. sections 122.41(j)(5) and (k)(2) because the enforcement authority under the Water Code is more stringent. In lieu of these conditions, this Order incorporates by reference Water Code section 13387(e).

B. Special Provisions

1. Reopener Provisions

a. **Whole Effluent Toxicity.** This Order requires the Discharger to investigate the causes of, and identify corrective actions to reduce or eliminate effluent toxicity through a Toxicity Reduction Evaluation (TRE). This Order may be reopened to include a numeric chronic toxicity limitation, a new acute toxicity limitation, and/or a

limitation for a specific toxicant identified in the TRE. Additionally, if a numeric chronic toxicity water quality objective is adopted by the State Water Board, this Order may be reopened to include a numeric chronic toxicity limitation based on that objective.

b. **Water Effects Ratio (WER) and Metal Translators.** A default WER of 1.0 has been used in this Order for calculating CTR criteria for applicable priority pollutant inorganic constituents. A WER of 7.55 has been used in this Order for calculating CTR criteria of copper. In addition, default dissolved-to-total metal translators have been used to convert water quality objectives from dissolved to total recoverable when developing effluent limitations for metals. If the Discharger performs studies to determine site-specific WERs and/or site-specific dissolved-to-total metal translators, this Order may be reopened to modify the effluent limitations for the applicable inorganic constituents.

c. **Persistent Chlorinated Hydrocarbon Pesticides.** There are indications that the discharge may contain persistent chlorinated hydrocarbon pesticides that have a reasonable potential to cause or contribute to an exceedance of water quality objectives. This Order requires the Discharger to complete a study of these constituents' potential effect in the receiving water. This reopener provision allows the Central Valley Water Board to reopen this Order for addition of effluent limitations and requirements for these constituents if after review of the study results it is determined that the discharge has reasonable potential to cause or contribute to an exceedance of a water quality objective.

d. **Extension of Surface Water Discharge Season.** The Discharger requested in the ROWD to extent the permitted period of surface water discharge of 1 November through 30 April to 1 October through 30 June due to limited land disposal capacity in the DLDA of the Facility. The previous Order (R5-2009-0007) required the Discharger to complete a complete antidegradation analysis satisfying the requirements of State Water Board Resolution 68-16. The Discharger submitted an approved antidegradation analysis consistent with Resolution 68-16 and a current 1-in-100 Year Water Balance Calculation on 10 April 2014. The antidegradation analysis concluded that the use of spray irrigation on the Neilson Property instead of disposal trenches will decrease the risk of degradation to underlying groundwater. The 1-in-100 Year Water Balance Calculation also concluded that the expansion of land application through spray irrigation on the existing DLDA and the Neilson Property would provide sufficient disposal capacity for the Discharger in the short term. Therefore, this Order authorizes the Discharger to extend their land application practices to include the Neilson Property. In order for the Central Valley Water Board to authorize an extension of the surface water discharge season, the Discharger must submit a report evaluating the long term use of the extended DLDA as an alternative to extension of the surface water discharge season. Should the Discharger submit an evaluation demonstrating that the additional land disposal does not mitigate the need for extension of the surface water discharger season, this Order may be reopened to extend the permitted period of surface water discharge.5

e. **Flow Ratio Prohibition.** This Order includes a prohibition of discharges of secondary treated wastewater to the North Fork Calaveras River which do not receive a minimum of 20:1 dilution as a daily average. Flow monitoring indicates that, at times, the discharge to the North Fork Calaveras River may not receive 20:1 dilution. In order to revise the discharge prohibition to allow discharges that do not receive 20:1 dilution, the Discharger must submit a complete antidegradation analysis analyzing the potential effects of increased concentrations, at the revised

flow ratio, of constituents receiving dilution credits for the protection of human health in this Order (Attachment F section IV.C.2.c). Upon submission of an approved antidegradation analysis, this Order may be reopened to revise the discharge prohibition to allow discharges that do not receive 20:1 dilution and include tertiary treatment requirements consistent with DPH recommendations.

f. **Dilution/Mixing Zone Study.** As described in section IV.C.2.c of this Fact Sheet, the Discharger submitted an inadequate Dilution/Mixing Zone Study and effluent limitations based on criteria for the protection of aquatic life have been established without consideration of dilution credits. Should the Discharger submit an approved Dilution/Mixing Zone Study that meets the requirements of Section 1.4.2.2 of the SIP, including defining the boundaries of the acute and chronic mixing zones, the Regional Water Board may reopen this Order to include effluent limitations based on an appropriate dilution factor for the protection of aquatic life.

2. Special Studies and Additional Monitoring Requirements

a. **Chronic Whole Effluent Toxicity Requirements.** The Basin Plan contains a narrative toxicity objective that states, "All waters shall be maintained free of toxic substances in concentrations that produce detrimental physiological responses in human, plant, animal, or aquatic life." (Basin Plan at page III-8.00) Based on whole effluent chronic toxicity testing performed by the Discharger from April 2010 through January 2013, the discharge does not have reasonable potential to cause or contribute to an in-stream excursion above of the Basin Plan's narrative toxicity objective.

The Monitoring and Reporting Program of this Order requires chronic WET monitoring for demonstration of compliance with the narrative toxicity objective. In addition to WET monitoring, this provision requires the Discharger to continue the implementation of the previously submitted TRE Work Plan approved by the Executive Officer, to ensure the Discharger has a plan to immediately move forward with the initial tiers of a TRE, in the event effluent toxicity is encountered in the future. The provision also includes a numeric toxicity monitoring trigger, requirements for accelerated monitoring, and requirements for TRE initiation if toxicity is demonstrated.

Monitoring Trigger. A numeric toxicity monitoring trigger of > 4 TUc (where TUc = 100/NOEC) is applied in the provision, because this Order requires a minimum 20:1 flow ratio (river: effluent) and the Discharger's mixing zone study demonstrated initial mixing of greater than 4:1. Therefore, a TRE is triggered when the effluent exhibits toxicity at 25% effluent.

Accelerated Monitoring. The provision requires accelerated WET testing when a regular WET test result exceeds the monitoring trigger. The purpose of accelerated monitoring is to determine, in an expedient manner, whether there is toxicity before requiring the implementation of a TRE. Due to possible seasonality of the toxicity, the accelerated monitoring should be performed in a timely manner, preferably taking no more than 2 to 3 months to complete.

The provision requires accelerated monitoring consisting of four chronic toxicity tests in a six-week period (i.e., one test every two weeks) using the species that exhibited toxicity. Guidance regarding accelerated monitoring and TRE initiation is provided in the *Technical Support Document for Water Quality-based Toxics Control,* EPA/505/2-90-001, March 1991 (TSD). The TSD at page 118 states, "*EPA*

recommends if toxicity is repeatedly or periodically present at levels above effluent limits more than 20 percent of the time, a TRE should be required." Therefore, four accelerated monitoring tests are required in this provision. If no toxicity is demonstrated in the four accelerated tests, then it demonstrates that toxicity is not present at levels above the monitoring trigger more than 20 percent of the time (only 1 of 5 tests are toxic, including the initial test). However, notwithstanding the accelerated monitoring results, if there is adequate evidence of effluent toxicity (i.e. toxicity present exceeding the monitoring trigger more than 20 percent of the time), the Executive Officer may require that the Discharger initiate a TRE.

See the WET Accelerated Monitoring Flow Chart (Figure F-1), below, for further clarification of the accelerated monitoring requirements and for the decision points for determining the need for TRE initiation.

Figure F-1
WET Accelerated Monitoring Flow Chart

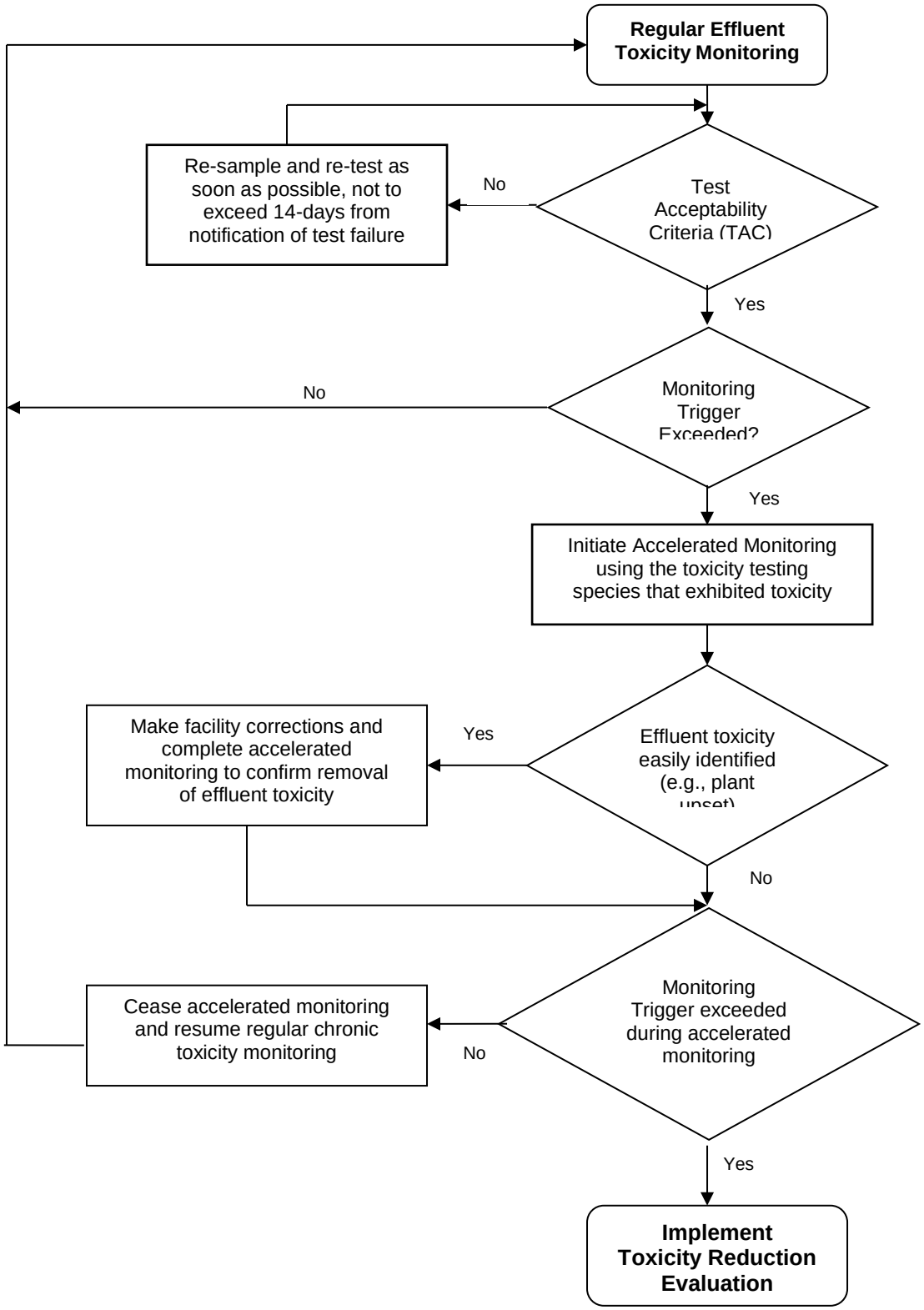

b. **Persistent Chlorinated Hydrocarbon Pesticides Study.** There are indications that the discharge may contain persistent chlorinated hydrocarbon pesticides in concentrations that have a reasonable potential to cause or contribute to an exceedance of water quality objectives. This Order requires the Discharger to complete a study of these constituents' potential effect in the receiving water. If after a review of the study results it is determined that the discharge has reasonable potential to cause or contribute to an exceedance of a water quality objective this Order may be reopened and effluent limitations added for the subject constituents.

3. Best Management Practices and Pollution Prevention

a. **Water Code Section 13263.3(d)(3) Pollution Prevention Plans.** A pollution prevention plan for mercury is required in this Order per Water Code section 13263.3(d)(1)(C). The pollution prevention plans required in section VI.C.3.a and in section VI.C.7 of this Order, shall, at a minimum, meet the requirements outlined in Water Code section 13263.3(d)(3). The minimum requirements for the pollution prevention plans include the following:

i. An estimate of all of the sources of a pollutant contributing, or potentially contributing, to the loadings of a pollutant in the treatment plant influent.

ii. An analysis of the methods that could be used to prevent the discharge of the pollutants into the Facility, including application of local limits to industrial or commercial dischargers regarding pollution prevention techniques, public education and outreach, or other innovative and alternative approaches to reduce discharges of the pollutant to the Facility. The analysis also shall identify sources, or potential sources, not within the ability or authority of the Discharger to control, such as pollutants in the potable water supply, airborne pollutants, pharmaceuticals, or pesticides, and estimate the magnitude of those sources, to the extent feasible.

iii. An estimate of load reductions that may be attained through the methods identified in subparagraph ii.

iv. A plan for monitoring the results of the pollution prevention program.

v. A description of the tasks, cost, and time required to investigate and implement various elements in the pollution prevention plan.

vi. A statement of the Discharger's pollution prevention goals and strategies, including priorities for short-term and long-term action, and a description of the Discharger's intended pollution prevention activities for the immediate future.

vii. A description of the Discharger's existing pollution prevention programs.

viii. An analysis, to the extent feasible, of any adverse environmental impacts, including cross-media impacts or substitute chemicals that may result from the implementation of the pollution prevention program.

ix. An analysis, to the extent feasible, of the costs and benefits that may be incurred to implement the pollution prevention program.

b. **Salinity Evaluation and Minimization Plan.** An Evaluation and Minimization Plan for salinity is required to be maintained in this Order to ensure adequate measures are developed and implemented by the Discharger to reduce the discharge of salinity to the North Fork Calaveras River.

c. **Mercury Pollution Prevention Plan.** This Order requires a Pollution Prevention Plan for mercury be developed in accordance with Water Code section

13263.3(d)(3). The North Fork Calaveras River, to which the Facility discharges treated wastewater, is not listed on the 303(d) list for impaired water bodies. However, the North Fork Calaveras River is tributary to the New Hogan Reservoir, which is listed on the 303(d) list for mercury. A TMDL for mercury in New Hogan Reservoir is currently under development and is projected to be completed in 2021. The Pollution Prevention Plan for mercury is required to prevent possible further mercury loading in New Hogan Reservoir.

4. Construction, Operation, and Maintenance Specifications

a. The operation and maintenance specifications for Storage Pond D are necessary to protect the beneficial uses of the groundwater. The specifications included in this Order are retained from Order R5-2009-0007. In addition, reporting requirements related to use of Storage Pond D are required to monitor its use and the potential impact on groundwater.

5. Special Provisions for Municipal Facilities (POTW's Only)

a. The State Water Board issued General Waste Discharge Requirements for Sanitary Sewer Systems, Water Quality Order 2006-0003-DWQ (General Order) on May 2, 2006. The Monitoring and Reporting Requirements for the General Order were amended by Water Quality Order WQ 2008-0002-EXEC on February 20, 2008. The General Order requires public agencies that own or operate sanitary sewer systems with greater than one mile of pipes or sewer lines to enroll for coverage under the General Order. The General Order requires agencies to develop sanitary sewer management plans (SSMPs) and report all sanitary sewer overflows (SSOs), among other requirements and prohibitions. The Discharger has applied for and has been approved for coverage under Order 2006-0003-DWQ for operation of its wastewater collection system.

b. **Anaerobically Digestible Material.** Managers of publicly owned treatment works (POTW's) increasingly are considering the addition of organic material such as food waste, fats, oils and grease (FOG) into their anaerobic digesters for co-digestion to increase the volume of methane and other biogases for energy production. The State Water Board has been working with the California Department of Resources Recycling and Recovery (CalRecycle), the California Department of Food and Agriculture (CDFA), and the California Association of Sanitation Agencies (CASA) to delineate jurisdictional authority for the receipt of hauled-in anaerobically digestible material (ADM[1]) at POTW's for co-digestion.

CalRecycle is proposing an exclusion from Process Facility/Transfer Station permits for direct injection of ADM to POTW anaerobic digesters for co-digestion that are regulated under waste discharge requirements or NPDES permits. The proposed CalRecycle exclusion is restricted to ADM that has been prescreened, slurried, and processed/conveyed in a closed system to be co-digested with regular POTW sludge. The CalRecycle exclusion assumes that a POTW has developed Standard Operating Procedures (SOP's) for the proper handling, processing, tracking, and management of the ADM received.

[1] CalRecycle defines "anaerobically digestible material" as: inedible kitchen grease as defined in section 19216 of the Food and Agricultural Code, food material as defined in Title 14, CCR, Chapter 3.1, Article 1, Section 17582(a) (2) and vegetative food material as defined in Title 14, CCR, Chapter 3.1, Article 1, Section 17582(A).

The Discharger currently does not accept hauled-in ADM for direct injection into its anaerobic digester. However, if the Discharger proposes to receive hauled-in ADM for injection into its anaerobic digester for co-digestion, this provision requires the Discharger to notify the Central Valley Water Board and develop and implement SOP's for this activity prior to initiation of the hauling. The requirements of the SOP's are discussed in Section VI.C.5.c.

6. Other Special Provisions – Not Applicable

7. Compliance Schedules – Not Applicable

VII. RATIONALE FOR MONITORING AND REPORTING REQUIREMENTS

CWA section 308 and Section 122.48 of 40 C.F.R. sections 122.41(h), (j)-(l), 122.44(i), and 122.48 requires that all NPDES permits specify monitoring and reporting requirements. for recording and reporting monitoring results. Water Code sections 13267 and 13383 also authorize the Central Valley Water Board to establish monitoring, inspection, entry, reporting, and recordkeeping requirements.require technical and monitoring reports. The Monitoring and Reporting Program (MRP), Attachment E of this Order, establishes monitoring, and reporting, and recordkeeping requirements that implement federal and state requirements. The following provides the rationale for the monitoring and reporting requirements contained in the MRP for this facility.

A. Influent Monitoring

1. Influent monitoring is required to collect data on the characteristics of the wastewater and to assess compliance with effluent limitations (e.g., BOD_5 and TSS reduction requirements). The monitoring frequencies for flow (continuous), BOD_5 and TSS (1/week), and electrical conductivity and TDS (1/quarter) have been retained from Order R5-2009-0007.

B. Effluent Monitoring

1. Pursuant to the requirements of 40 CFR 122.44(i)(2) effluent monitoring is required for all constituents with effluent limitations. Effluent monitoring is necessary to assess compliance with effluent limitations, assess the effectiveness of the treatment process, and to assess the impacts of the discharge on the receiving stream and groundwater.

2. Effluent monitoring frequencies and sample types for ammonia (1/week), BOD_5 (1/week), chlorine (continuous), electrical conductivity (1/week), cyanide (1/month), flow (continuous), hardness (1/month), pH (1/day), TDS (1/month), temperature (1/day) and TSS (1/week), have been retained from Order No. R5-2009-0007 to determine compliance with effluent limitations for these parameters.

3. Monitoring data collected over the previous permit term for bis(2-ethylhexyl)phthalate, chlordane, copper, diazinon, dichlorobromomethane, iron, nitrate, nitrite, settleable solids, and zinc did not demonstrate reasonable potential to exceed water quality objectives/criteria. Thus, specific monitoring requirements for these parameters have not been retained from Order No. R5-2009-0007.

4. California Water Code section 13176, subdivision (a), states: "The analysis of any material required by [Water Code sections 13000-16104] shall be performed by a laboratory that has accreditation or certification pursuant to Article 3 (commencing with Section 100825) of Chapter 4 of Part 1 of Division 101 of the Health and Safety Code." The Department of Public Health certifies laboratories through its Environmental Laboratory Accreditation Program (ELAP).

Section 13176 cannot be interpreted in a manner that would violate federal holding time requirements that apply to NPDES permits pursuant to the Clean Water Act. (Wat. Code §§ 13370, subd. (c), 13372, 13377.) Section 13176 is inapplicable to NPDES permits to the extent it is inconsistent with Clean Water Act requirements. (Wat. Code § 13372, subd. (a).) The holding time requirements are 15 minutes for chlorine residual, dissolved oxygen, and pH, and immediate analysis is required for temperature. (40 C.F.R. § 136.3(e), Table II) Due to the location of the Facility, it is both legally and factually impossible for the Discharger to comply with section 13176 for constituents with short holding times.

C. Whole Effluent Toxicity Testing Requirements

1. **Acute Toxicity.** Consistent with Order R5-2009-0007, 96-hour bioassay testing is required twice per surface water discharge season (1 November through 30 April) to demonstrate compliance with the effluent limitation for acute toxicity.

2. **Chronic Toxicity.** Consistent with Order R5-2009-0007, chronic whole effluent toxicity testing is required once per surface water discharge season (1 November through 30 April) in order to demonstrate compliance with the Basin Plan's narrative toxicity objective.

D. Receiving Water Monitoring

1. Surface Water

a. Receiving water monitoring is necessary to assess compliance with receiving water limitations and to assess the impacts of the discharge on the receiving stream.

2. Groundwater

a. Water Code section 13267 states, in part, "(a) A Regional Water Board, in establishing…waste discharge requirements… may investigate the quality of any waters of the state within its region" and "(b) (1) In conducting an investigation…, the Regional Water Board may require that any person who… discharges… waste…that could affect the quality of waters within its region shall furnish, under penalty of perjury, technical or monitoring program reports which the Regional Water Board requires. The burden, including costs, of these reports shall bear a reasonable relationship to the need for the report and the benefits to be obtained from the reports." The burden, including costs, of these reports shall bear a reasonable relationship to the need for the report and the benefits to be obtained from the reports. In requiring those reports, a Regional Water Board shall provide the person with a written explanation with regard to the need for the reports, and shall identify the evidence that supports requiring that person to provide the reports. The Monitoring and Reporting Program is issued pursuant to Water Code section 13267. The groundwater monitoring and reporting program required by this Order and the Monitoring and Reporting Program are necessary to assure compliance with these waste discharge requirements. The Discharger is responsible for the discharges of waste at the facility subject to this Order.

b. Monitoring of the groundwater must be conducted to determine if the discharge has caused an increase in constituent concentrations, when compared to background. The monitoring must, at a minimum, require a complete assessment of groundwater impacts including the vertical and lateral extent of degradation, an assessment of all wastewater-related constituents which may have migrated to groundwater, an analysis of whether additional or different methods of treatment or control of the discharge are necessary to provide best practicable treatment or control to comply

with Resolution No. 68-16. Economic analysis is only one of many factors considered in determining best practicable treatment or control. If monitoring indicates that the discharge has incrementally increased constituent concentrations in groundwater above background, this permit may be reopened and modified. Until groundwater monitoring is sufficient, this Order contains Groundwater Limitations that allow groundwater quality to be degraded for certain constituents when compared to background groundwater quality, but not to exceed water quality objectives. If groundwater quality has been degraded by the discharge, the incremental change in pollutant concentration (when compared with background) may not be increased. If groundwater quality has been or may be degraded by the discharge, this Order may be reopened and specific numeric limitations established consistent with Resolution No. 68-16 and the Basin Plan.

c. This Order requires the Discharger to continue groundwater monitoring and includes a regular schedule of groundwater monitoring in the attached Monitoring and Reporting Program. The groundwater monitoring reports are necessary to evaluate impacts to waters of the State to assure protection of beneficial uses and compliance with Central Valley Water Board plans and policies, including Resolution No. 68-16. Evidence in the record includes effluent monitoring data that indicates the presence of constituents that may degrade groundwater and surface water.

E. Other Monitoring Requirements

1. Biosolids Monitoring

Biosolids monitoring is required to ensure compliance with the biosolids disposal requirements contained in the Special Provision contained in section VI.C.6.a. of this Order. Biosolids disposal requirements are imposed pursuant to 40 CFR Part 503 to protect public health and prevent groundwater degradation.

2. Water Supply Monitoring

Water supply monitoring is required to evaluate the source of constituents in the wastewater.

3. Pond Monitoring

Storage pond monitoring is required to ensure proper operation of the storage pond. Monthly monitoring for freeboard, pH, and dissolved oxygen to evaluate compliance with land discharge specifications; quarterly monitoring for electrical conductivity, total nitrogen, and total dissolved solids; and annual monitoring for standard minerals have been incorporated in this Order to evaluate impacts to groundwater from the pond.

4. Land Discharge Monitoring

Land discharge monitoring is required to ensure that the discharge to the land disposal area complies with the Storage Pond and Land Disposal Operating Requirements in section VI.C.4 of this Order. Monitoring frequencies and sample types for flow (continuous), BOD_5 (weekly), and total coliform organisms (weekly) have been retained from Order R5-2009-0007.

VIII. PUBLIC PARTICIPATION

The Central Valley Water Board has considered the issuance of WDR's that will serve as an NPDES permit for San Andreas Sanitary District Wastewater Treatment Plant.. As a step in the WDR adoption process, the Central Valley Water Board staff has developed tentative WDR's and has encouraged public participation in the WDR adoption process.

A. Notification of Interested Parties

The Central Valley Water Board notified the Discharger and interested agencies and persons of its intent to prescribe WDR's for the discharge and provided an opportunity to submit written comments and recommendations. Notification was provided through the posting of the Notice of Public Hearing concerning the WDRs at the Calaveras County Clerk Recorder's office (government center) on 4 June 2014, and at the Superior Court, Calaveras County Court House (government center) on 4 June 2014.

The public had access to the agenda and any changes in dates and locations through the Central Valley Water Board's website at:
www.waterboards.ca.gov/centralvalley

B. Written Comments

Interested persons were invited to submit written comments concerning tentative WDR's as provided through the notification process. Comments were due either in person or by mail to the Executive Office at the Central Valley Water Board at the address above on the cover page of this Order.

To be fully responded to by staff and considered by the Central Valley Water Board, the written comments were due at the Central Valley Water Board office by 5:00 p.m. on 30 June 2014.

C. Public Hearing

The Central Valley Water Board held a public hearing on the tentative WDR's during its regular Board meeting on the following date and time and at the following location:

Date:	7/8 August 2014
Time:	8:30 a.m.
Location:	Regional Water Quality Control Board, Central Valley Region 11020 Sun Center Dr., Suite #200 Rancho Cordova, CA 95670

Interested persons were invited to attend. At the public hearing, the Central Valley Water Board heard testimony pertinent to the discharge, WDR's, and permit. For accuracy of the record, important testimony was requested in writing.

D. Reconsideration of Waste Discharge Requirements

Any aggrieved person may petition the State Water Board to review the decision of the Central Valley Water Board regarding the final WDR's. The petition must be received by the State Water Board at the following address within 30 calendar days of the Central Valley Water Board's action:

State Water Resources Control Board
Office of Chief Counsel
P.O. Box 100, 1001 I Street
Sacramento, CA 95812-0100

For instructions on how to file a petition for review, see
http://www.waterboards.ca.gov/public_notices/petitions/water_quality/wqpetition_instr.shtml

E. Information and Copying

The Report of Waste Discharge, other supporting documents, and comments received are on file and may be inspected at the address above at any time between 8:30 a.m. and 4:45 p.m.,

Monday through Friday. Copying of documents may be arranged through the Central Valley Water Board by calling (916) 464-3291.

F. Register of Interested Persons

Any person interested in being placed on the mailing list for information regarding the WDR's and NPDES permit should contact the Central Valley Water Board, reference this facility, and provide a name, address, and phone number.

G. Additional Information

Requests for additional information or questions regarding this order should be directed to Mr. Tyson Pelkofer at 916-464-4853 or Tyson.Pelkofer@waterboards.ca.gov.

ATTACHMENT G – SUMMARY OF REASONABLE POTENTIAL ANALYSIS

Constituent	Units	MEC	B	C	CMC	CCC	Water & Org	Org. Only	Basin Plan	MCL	Reasonable Potential
Aluminum	ug/L	850	129	50	750	87	N/A	N/A	N/A	N/A	**No**
Ammonia (as N)	mg/L	5	5	3.18228	5.615107	3.18228	N/A	N/A	N/A	N/A	**Yes**
Bis(2-ethylhexyl)phthalate	ug/L	1.1	<0.95	5.9	N/A	N/A	N/A	5.9	N/A	N/A	**No**
Chlordane	ug/L	<0.005	<0.005	0.00059	2.4	0.0043	N/A	0.00059	N/A	N/A	**No**
Chlorine, Total Residual	mg/L	<0.001	N/A	0.011	0.019	0.011	N/A	N/A	N/A	N/A	**Yes**
Copper	ug/L	15	1.0	52.85[1]	10	7	N/A	N/A	N/A	N/A	**No**
Cyanide, Total (as CN)	ug/L	11	1.0	5.2	22	5.2	N/A	220000	N/A	N/A	**Yes**
Diazinon	ug/L	<0.007	<0.007	0.05	0.08	0.05	N/A	N/A	[2]	N/A	**No**
Dichlorobromomethane	ug/L	4	<0.160	46	N/A	N/A	N/A	46	N/A	N/A	**No**
Iron	ug/L	110	200	1000	N/A	1000	N/A	N/A	N/A	N/A	**No**
Nitrate (as N)	mg/L	22	0.022	10	N/A	N/A	N/A	N/A	N/A	N/A	**No**
Settleable Solids	mll/L						N/A		[2]	N/A	**No**
Specific Conductance (EC)	umhos/cm	733	719	700	N/A	N/A	N/A	N/A	N/A	N/A	**No**
Total Dissolved Solids (TDS)	mg/L	505	140	450	N/A	N/A	N/A	N/A	N/A	N/A	**No**
Zinc, Total Recoverable	ug/L	87	-	90	90	90	N/A	26000	N/A	N/A	**No**

General Note: All inorganic concentrations are given as a total recoverable.

1. Water Effects Ratio of 7.55 applied to C.
2. Narrative objective.

MEC = Maximum Effluent Concentration
B = Maximum Receiving Water Concentration or lowest detection level, if non-detect
C = Criterion used for Reasonable Potential Analysis
CMC = Criterion Maximum Concentration (CTR or NTR)
CCC = Criterion Continuous Concentration (CTR or NTR)
Water & Org = Human Health Criterion for Consumption of Water & Organisms (CTR or NTR)
Org. Only = Human Health Criterion for Consumption of Organisms Only (CTR or NTR)
Basin Plan = Numeric Site-specific Basin Plan Water Quality Objective
MCL = Drinking Water Standards Maximum Contaminant Level
NA = Not Available
ND = Non-detect

ATTACHMENT H – CALCULATION OF WQBEL'S

Parameter	Units	Most Stringent Criteria			Dilution Factors			HH Calculations			Aquatic Life Calculations									Final Effluent Limitations	
		HH	CMC	CCC	HH	CMC	CCC	ECA_{HH} = $AMEL_{HH}$	AMEL/MDEL $Multiplier_{HH}$	$MDEL_{HH}$	ECA $Multiplier_{acute}$	LTA_{acute}	ECA $Multiplier_{chronic}$	$LTA_{chronic}$	Lowest LTA	AMEL $Multiplier_{95}$	$AMEL_{AL}$	MDEL $Multiplier_{99}$	$MDEL_{AL}$	Lowest AMEL	Lowest MDEL
Ammonia Nitrogen, Total (as N)	mg/L	--	3.96	1.58	--	--	--	--	--	--	0.32	1.1	0.78	1.23	1.1	1.55	1.77	3.11	3.56	1.77	3.56
Cyanide, Total (as CN)	µg/L	--	22	5.2	--	0	0	--	--	--	0.49	10.8	0.69	3.6	3.6	1.30	4.6	2.03	7.3	4.6	7.3

[1] USEPA Ambient Water Quality Criteria.