CALIFORNIA REGIONAL WATER QUALITY CONTROL BOARD

CENTRAL VALLEY REGION

11020 Sun Center Drive, #200 Rancho Cordova, California 95670-6114
Phone (916) 464-3291 • Fax (916) 464-4645
http://www.waterboards.ca.gov/centralvalley

ORDER NO. R5-2010-XXXX
NPDES NO. CA0084697

WASTE DISCHARGE REQUIREMENTS FOR THE
UNITED AUBURN INDIAN COMMUNITY
THUNDER VALLEY CASINO WASTEWATER TREATMENT PLANT
PLACER COUNTY

Deleted: AND

Deleted: HYDROSCIENCE OPERATIONS, INC.¶

The following Discharger is subject to waste discharge requirements as set forth in this Order:

Table 1. Discharger Information

Discharger	United Auburn Indian Community
Name of Facility	Thunder Valley Casino Wastewater Treatment Plant
Facility Address	1200 Athens Avenue, Lincoln, CA 95648
	Placer County
The U.S. Environmental Protection Agency (USEPA) and the Regional Water Quality Control Board have classified this discharge as a minor discharge.	

Deleted: and Hydroscience Operations, Inc.

The discharge by the United Auburn Indian Community from the discharge points identified below is subject to waste discharge requirements as set forth in this Order:

Deleted: and Hydroscience Operations, Inc.

Table 2. Discharge Location

Discharge Point	Effluent Description	Discharge Point Latitude	Discharge Point Longitude	Receiving Water
001	Treated Municipal Wastewater	38° 50' 44" N	121° 19' 01" W	Orchard Creek

Table 3. Administrative Information

This Order was adopted by the Regional Water Quality Control Board on:	**<Adoption Date>**
This Order shall become effective on:	**<Effective Date>**
This Order shall expire on:	**<Expiration Date>**
The Discharger shall file a Report of Waste Discharge in accordance with title 23, California Code of Regulations, as application for issuance of new waste discharge requirements no later than:	**<180 days prior to the Order expiration date>**

I, **Pamela C. Creedon**, Executive Officer, do hereby certify that this Order with all attachments is a full, true, and correct copy of an Order adopted by the California Regional Water Quality Control Board, Central Valley Region, on **XX January 2010**.

_____
Pamela C. Creedon, Executive Officer

Deleted: HYDROSCIENCE OPERATIONS, INC.

Table of Contents

I. Facility Information 4
II. Findings 4
III. Discharge Prohibitions 12
IV. Effluent Limitations and Discharge Specifications 13
A. Effluent Limitations – Discharge Point No. 001 13
B. Land Discharge Specifications – Not Applicable 15
C. Reclamation Specifications 15
V. Receiving Water Limitations 17
A. Surface Water Limitations 17
B. Groundwater Limitations 19
VI. Provisions 19
A. Standard Provisions 19
B. Monitoring and Reporting Program Requirements 24
C. Special Provisions 24
1. Reopener Provisions 24
2. Special Studies, Technical Reports and Additional Monitoring Requirements 25
3. Best Management Practices and Pollution Prevention 27
4. Construction, Operation and Maintenance Specifications 27
5. Special Provisions for Municipal Facilities (POTWs Only) 32
6. Other Special Provisions 34
7. Compliance Schedules – Not Applicable 35
VII. Compliance Determination 35

List of Tables

Table 1. Discharger Information 1
Table 2. Discharge Location 1
Table 3. Administrative Information 1
Table 4. Facility Information 4
Table 5. Basin Plan Beneficial Uses 7
Table 6. Final Effluent Limitations 13

Deleted: HYDROSCIENCE OPERATIONS, INC.

List of Attachments

Attachment A – Definitions A-1
Attachment B – Map B-1
Attachment C – Flow Schematic C-1
Attachment D – Standard Provisions D-1
Attachment E – Monitoring and Reporting Program E-1
Attachment F – Fact Sheet F-1
Attachment G – Summary of Reasonable Potential Analysis G-1
Attachment H – Calculation of WQBELs H-1
Attachment I – Effluent and Receiving Water Characterization Study I-1
Attachment J – Dioxin and Furan Sampling J-1
Attachment K – Recycled Water Use Signage K-1
Attachment L – Best Management Practices for Recycled Water L-1
Attachment M – Annual Recycled Water Report M-1

Deleted: HYDROSCIENCE OPERATIONS, INC.

I. FACILITY INFORMATION

The following Discharger is subject to waste discharge requirements as set forth in this Order:

Table 4. Facility Information

Discharger	United Auburn Indian Community
Name of Facility	Thunder Valley Casino Wastewater Treatment Plant
Facility Address	1200 Athens Avenue Lincoln, CA 95648 Placer County
Facility Contact, Title, and Phone	Greg Baker, United Auburn Indian Community Tribal Administrator, (916) 240-4232 and (530) 883-2385
Mailing Address	10720 Indian Hill Road, Auburn, CA 95603
Type of Facility	Publicly Owned Treatment Works (POTW)
Facility Design Flow	0.35 million gallons per day (MGD), peak daily flow capacity 0.7 MGD (proposed, first phase of expansion) 0.875 MGD (proposed, second phase of expansion)

Deleted: and Hydroscience Operations, Inc.

Deleted: Scott Garawitz, General Manager, (916) 408-8398

Deleted: mgd

II. FINDINGS

The California Regional Water Quality Control Board, Central Valley Region (hereinafter Regional Water Board), finds:

A. Background. The United Auburn Indian Community (hereinafter Discharger) is currently discharging pursuant to Order No. R5-2005-0032 and National Pollutant Discharge Elimination System (NPDES) Permit No. CA0084697. The 2005 NPDES Permit regulated the facility influent flow of 0.35 MGD. The Discharger submitted a Report of Waste Discharge, dated 4 January 2008, and applied for a NPDES permit renewal to discharge up to and increased flow of 0.7 MGD (first phase of expansion) and subsequently 0.875 MGD (second phase of expansion) of treated wastewater from the Thunder Valley Casino Wastewater Treatment Plant, hereinafter Facility. The application was deemed complete on 31 March 2009.

Deleted: and Hydroscience Operations, Inc.

B. Facility Description. The United Auburn Indian Community owns and operates a wastewater collection, treatment, and disposal system, and provides sewerage service to the Thunder Valley Casino (formerly known as the Auburn Rancheria Casino), a gaming and entertainment facility. Hydroscience Operations is currently contracted by the Discharger to provide operational staff at the Facility. The treatment system consists of an influent pump station, headworks (flow measurement and fine screening), immersed membrane bioreactor (IMB), and ultraviolet (UV) light disinfection. The IMB combines an anoxic zone, aeration, clarification, and membrane filtration in a single tank. The filtration treatment is a microfiltration process, in which wastewater is pulled by vacuum through membranes. The filter membrane nominal pore size is 0.1 microns. As needed, sludge is pumped directly from the process overflow tank to the belt filter press unit process and then trucked off-site to a local landfill.

Deleted: The Facility is operated by

Deleted: two

Deleted: es

Deleted: HYDROSCIENCE OPERATIONS, INC.

The Discharger identified plans to expand the treatment capacity of the Facility to accommodate expansion of the existing gaming and restaurant facilities and the addition of a hotel, performing arts center, and parking structure. Specifically, the Discharger is planning to expand the Facility in two phases during the term of this Order to provide tertiary treatment for up to 0.7 MGD (first phase) and subsequently 0.875 MGD (second phase) of wastewater. This Order authorizes, after notification of the Regional Water Board that the two phases of expansion are complete, the discharge up to 0.7 MGD and 0.875 MGD of wastewater.

Deleted:

Deleted: is

Wastewater is discharged from Discharge Point No. 001 (see table on cover page) to Orchard Creek, a water of the United States, and a tributary to Auburn Ravine, East Side Canal, Cross Canal, and the Sacramento River, within the Lower Sacramento watershed. A portion of the treated municipal wastewater is also recycled and used on-site. The specific recycled water use areas include irrigation of the landscaping on the Thunder Valley Casino property and surrounding the Facility. Attachment B provides a map of the location of the Facility. Attachment C provides a flow schematic of the Facility.

Deleted:

C. Legal Authorities. This Order is issued pursuant to section 402 of the Clean Water Act (CWA) and implementing regulations adopted by USEPA and chapter 5.5, division 7 of the California Water Code (CWC; commencing with section 13370). It shall serve as a NPDES permit for point source discharges from this Facility to surface waters. This Order also serves as Waste Discharge Requirements (WDRs) pursuant to article 4, chapter 4, division 7 of the CWC (commencing with section 13260).

D. Background and Rationale for Requirements. The Regional Water Board developed the requirements in this Order based on information submitted as part of the application, through monitoring and reporting programs, and other available information. The Fact Sheet (Attachment F), which contains background information and rationale for Order requirements, is hereby incorporated into this Order and constitutes part of the Findings for this Order. Attachments A through E and G through M are also incorporated into this Order.

E. California Environmental Quality Act (CEQA). Under CWC section 13389, this action to adopt an NPDES permit is exempt from the provisions of CEQA, Public Resources Code sections 21100-21177.

F. Technology-based Effluent Limitations. Section 301(b) of the CWA and implementing USEPA permit regulations at section 122.44, title 40 of the Code of Federal Regulations (40 CFR 122.44), require that permits include conditions meeting applicable technology-based requirements at a minimum, and any more stringent effluent limitations necessary to meet applicable water quality standards. The discharge authorized by this Order must meet minimum federal technology-based requirements based on Secondary Treatment Standards at 40 CFR Part 133 and Best Professional Judgment (BPJ) in accordance with 40 CFR 125.3. A detailed discussion of the technology-based effluent limitations development is included in the Fact Sheet.

Deleted: HYDROSCIENCE OPERATIONS, INC.

G. Water Quality-Based Effluent Limitations (WQBELs). Section 301(b) of the CWA and 40 CFR 122.44(d) require that permits include limitations more stringent than applicable federal technology-based requirements where necessary to achieve applicable water quality standards. This Order contains requirements, expressed as a technology equivalence requirement, that are necessary to achieve water quality standards. The Regional Water Board has considered the factors listed in CWC section 13241 in establishing these requirements. The rationale for these requirements, which consist of tertiary treatment or equivalent requirements, is discussed in the Fact Sheet.

40 CFR 122.44(d)(1)(i) mandates that permits include effluent limitations for all pollutants that are or may be discharged at levels that have the reasonable potential to cause or contribute to an exceedance of a water quality standard, including numeric and narrative objectives within a standard. Where reasonable potential has been established for a pollutant, but there is no numeric criterion or objective for the pollutant, WQBELs must be established using: (1) USEPA criteria guidance under CWA section 304(a), supplemented where necessary by other relevant information; (2) an indicator parameter for the pollutant of concern; or (3) a calculated numeric water quality criterion, such as a proposed state criterion or policy interpreting the state's narrative criterion, supplemented with other relevant information, as provided in 40 CFR 122.44(d)(1)(vi).

H. Water Quality Control Plans. The Regional Water Board adopted a *Water Quality Control Plan, Fourth Edition (Revised September 2009)*, for the Sacramento and San Joaquin River Basins (hereinafter Basin Plan) that designates beneficial uses, establishes water quality objectives, and contains implementation programs and policies to achieve those objectives for all waters addressed through the plan. The Basin Plan at page II-2.00 states that the "…*beneficial uses of any specifically identified water body generally apply to its tributary streams*." The Basin Plan does not specifically identify beneficial uses for Orchard Creek, but does identify present and potential uses for Sacramento River from the Colusa Basin Drain to the "I" Street Bridge, to which the Orchard Creek, via Auburn Ravine, East Side Canal, and Cross Canal, is tributary. In addition, the Basin Plan implements State Water Resources Control Board (State Water Board) Resolution No. 88-63, which established state policy that all waters, with certain exceptions, should be considered suitable or potentially suitable for municipal or domestic supply. Thus, as discussed in detail in the Fact Sheet, beneficial uses applicable to Orchard Creek are as follows:

Deleted: *October 2007*

Deleted: HYDROSCIENCE OPERATIONS, INC.

Table 5. Basin Plan Beneficial Uses

Discharge Point	Receiving Water Name	Beneficial Use(s)
001	Orchard Creek	Existing: Municipal and domestic supply (MUN); agricultural supply, including irrigation (AGR); water contact recreation, including canoeing and rafting (REC-1); non-contact water recreation (REC-2); warm freshwater habitat (WARM); cold freshwater habitat (COLD); migration of aquatic organisms, warm and cold (MIGR); spawning, reproduction, and/or early development, warm and cold (SPWN); wildlife habitat (WILD); and navigation (NAV).

The Basin Plan includes a list of Water Quality Limited Segments (WQLSs), which are defined as "…*those sections of lakes, streams, rivers or other fresh water bodies where water quality does not meet (or is not expected to meet) water quality standards even after the application of appropriate limitations for point sources (40 CFR 130, et seq.)*." The Basin Plan also states, "*Additional treatment beyond minimum federal standards will be imposed on dischargers to WQLSs. Dischargers will be assigned or allocated a maximum allowable load of critical pollutants so that water quality objectives can be met in the segment*." Orchard Creek, Auburn Ravine, East Side Canal, and Cross Canal are not listed on the 303(d) list of impaired water bodies. The Sacramento River from Knights Landing to the Delta is listed as a WQLS for mercury and unknown toxicity in the 303(d) list of impaired water bodies. Effluent limitations for mercury are included in this Order.

Requirements of this Order implement the Basin Plan.

I. National Toxics Rule (NTR) and California Toxics Rule (CTR). USEPA adopted the NTR on 22 December 1992, and later amended it on 4 May 1995 and 9 November 1999. About 40 criteria in the NTR applied in California. On 18 May 2000, USEPA adopted the CTR. The CTR promulgated new toxics criteria for California and, in addition, incorporated the previously adopted NTR criteria that were applicable in the state. The CTR was amended on 13 February 2001. These rules contain water quality criteria for priority pollutants.

J. State Implementation Policy. On 2 March 2000, the State Water Board adopted the *Policy for Implementation of Toxics Standards for Inland Surface Waters, Enclosed Bays, and Estuaries of California* (State Implementation Policy or SIP). The SIP became effective on 28 April 28 2000 with respect to the priority pollutant criteria promulgated for California by USEPA through the NTR and to the priority pollutant objectives established by the Regional Water Board in the Basin Plan. The SIP became effective on 18 May 2000 with respect to the priority pollutant criteria promulgated by USEPA through the CTR. The State Water Board adopted amendments to the SIP on 24 February 2005 that became effective on 13 July 2005. The SIP establishes implementation provisions for priority pollutant criteria and objectives and provisions for chronic toxicity control. Requirements of this Order implement the SIP.

Deleted: HYDROSCIENCE OPERATIONS, INC.

K. Compliance Schedules and Interim Requirements. In general, an NPDES permit must include final effluent limitations that are consistent with CWA section 301 and with 40 CFR 122.44(d). There are exceptions to this general rule. The State Water Board has concluded that where the Regional Water Board's Basin Plan allows for schedules of compliance and the Regional Water Board is newly interpreting a narrative standard, it may include schedules of compliance in the permit to meet effluent limits that implement a narrative standard. See In the Matter of Waste Discharge Requirements for Avon Refinery (State Water Board Order WQ 2001-06 at pp. 53-55). See also Communities for a Better Environment et al. v. State Water Resources Control Board, 34 Cal.Rptr.3d 396, 410 (2005). The Basin Plan for the Sacramento and San Joaquin Rivers includes a provision that authorizes the use of compliance schedules in NPDES permits for water quality objectives that are adopted after the date of adoption of the Basin Plan, which was 25 September 1995 (see Basin Plan at page IV-16). Consistent with the State Water Board's Order in the CBE matter, the Regional Water Board has the discretion to include compliance schedules in NPDES permits when it is including an effluent limitation that is a "new interpretation" of a narrative water quality objective. This conclusion is also consistent with USEPA policies and administrative decisions. See, e.g., Whole Effluent Toxicity (WET) Control Policy. The Regional Water Board, however, is not required to include a schedule of compliance, but may issue a Time Schedule Order pursuant to CWC section 13300 or a Cease and Desist Order pursuant to CWC section 13301 where it finds that the discharger is violating or threatening to violate the permit. The Regional Water Board will consider the merits of each case in determining whether it is appropriate to include a compliance schedule in a permit, and, consistent with the Basin Plan, should consider feasibility of achieving compliance, and must impose a schedule that is as short as practicable to achieve compliance with the objectives, criteria, or effluent limit based on the objective or criteria.

Section 2.1 of the SIP provides that, based on a Discharger's request and demonstration that it is infeasible for an existing Discharger to achieve immediate compliance with an effluent limitation derived from a CTR criterion, compliance schedules may be allowed in an NPDES permit. Unless an exception has been granted under section 5.3 of the SIP, a compliance schedule may not exceed 5 years from the date that the permit is issued or reissued, nor may it extend beyond 10 years from the effective date of the SIP (or 18 May 2010) to establish and comply with CTR criterion-based effluent limitations. Where a compliance schedule for a final effluent limitation exceeds 1 year, the Order must include interim numeric limitations for that constituent or parameter. Where allowed by the Basin Plan, compliance schedules and interim effluent limitations or discharge specifications may also be granted to allow time to implement a new or revised water quality objective. This Order does not include compliance schedules or interim effluent limitations.

L. Alaska Rule. On 30 March 2000, USEPA revised its regulation that specifies when new and revised state and tribal water quality standards become effective for CWA purposes. (40 CFR 131.21 and 65 FR 24641 (27 April 2000).) Under the revised regulation (also known as the Alaska rule), new and revised standards submitted to USEPA after 30 May 2000, must be approved by USEPA before being used for CWA purposes. The final rule also provides that standards already in effect and submitted to

Deleted: HYDROSCIENCE OPERATIONS, INC.

USEPA by 30 May 2000 may be used for CWA purposes, whether or not approved by USEPA.

M. Stringency of Requirements for Individual Pollutants. This Order contains both technology-based effluent limitations and WQBELs for individual pollutants. The technology-based effluent limitations consist of restrictions on 5-day biochemical oxygen demand (BOD_5) and total suspended solids (TSS). The WQBELs consist of restrictions on aluminum, ammonia, cadmium, chlorine residual, delta-BHC, electrical conductivity, endrin aldehyde, iron, lead, manganese, mercury, pH, total coliform organisms, and zinc. This Order's technology-based pollutant restrictions implement the minimum, applicable federal technology-based requirements.

WQBELs have been scientifically derived to implement water quality objectives that protect beneficial uses. Both the beneficial uses and the water quality objectives have been approved pursuant to federal law and are the applicable federal water quality standards. To the extent that WQBELs for toxic pollutants were derived from the CTR, the CTR is the applicable standard pursuant to 40 CFR 131.38. The scientific procedures for calculating the individual WQBELs for priority pollutants are based on the CTR-SIP, which was approved by USEPA on 18 May 2000. All beneficial uses and water quality objectives contained in the Basin Plan were approved under state law and submitted to and approved by USEPA prior to 30 May 2000. Any water quality objectives and beneficial uses submitted to USEPA prior to 30 May 2000, but not approved by USEPA before that date, are nonetheless "*applicable water quality standards for purposes of the [Clean Water] Act*" pursuant to 40 CFR 131.21(c)(1). Collectively, this Order's restrictions on individual pollutants are no more stringent than required to implement the technology-based requirements of the CWA and the applicable water quality standards for purposes of the CWA.

This Order contains pollutant restrictions that are more stringent than applicable federal requirements and standards. Specifically, this Order includes effluent limitations for BOD_5, TSS, and total coliform organisms that are more stringent than applicable federal standards, but that are nonetheless necessary to meet numeric objectives or protect beneficial uses. The rationale for including these limitations is explained in the Fact Sheet (Attachment F). In addition, the Regional Water Board has previously considered the factors in CWC section 13241.

N. Antidegradation Policy. 40 CFR 131.12 requires that the state water quality standards include an antidegradation policy consistent with the federal policy. The State Water Board established California's antidegradation policy in State Water Board Resolution No. 68-16. Resolution No. 68-16 incorporates the federal antidegradation policy where the federal policy applies under federal law. Resolution No. 68-16 requires that existing quality of waters be maintained unless degradation is justified based on specific findings. The Regional Water Board's Basin Plan implements, and incorporates by reference, both the state and federal antidegradation policies. As discussed in detail in the Fact Sheet, the permitted discharge is consistent with the antidegradation provision of 40 CFR 131.12 and Resolution No. 68-16.

Deleted: HYDROSCIENCE OPERATIONS, INC.

As part of the January 2008 Report of Waste Discharge and in additional information provided by the Discharger on 26 October 2009, the Discharger provided a complete Antidegradation Analysis following the guidance provided by State Water Board APU 90-004. As demonstrated in the analysis, the water quality resulting from the proposed increase in discharge to Orchard Creek (from 0.35 MGD to 0.875 MGD of tertiary treated wastewater) is consistent with the maximum social and economical benefit to the people of the State, will not unreasonably affect beneficial uses, will not cause water quality to be less than water quality objectives, and that the discharge provides protection for existing in-stream uses and water quality necessary to protect those uses.

O. Anti-Backsliding Requirements. Sections 303(d)(4) and 402(o)(2) of the CWA and federal regulations at 40 CFR 122.44(l) prohibit backsliding in NPDES permits. These anti-backsliding provisions require effluent limitations in a reissued permit to be as stringent as those in the previous permit, with some exceptions. Some effluent limitations in this Order are less stringent that those in Order No. R5-2005-0032. As discussed in detail in the Fact Sheet, this relaxation of effluent limitations is consistent with the anti-backsliding requirements of the CWA and federal regulations.

P. Endangered Species Act. This Order does not authorize any act that results in the taking of a threatened or endangered species or any act that is now prohibited, or becomes prohibited in the future, under either the California Endangered Species Act (Fish and Game Code sections 2050 to 2097) or the Federal Endangered Species Act (16 U.S.C.A. sections 1531 to 1544). This Order requires compliance with effluent limits, receiving water limits, and other requirements to protect the beneficial uses of waters of the state. The discharger is responsible for meeting all requirements of the applicable Endangered Species Act.

Q. Monitoring and Reporting. 40 CFR 122.48 requires that all NPDES permits specify requirements for recording and reporting monitoring results. CWC sections 13267 and 13383 authorize the Regional Water Board to require technical and monitoring reports. The Monitoring and Reporting Program establishes monitoring and reporting requirements to implement federal and State requirements. The Monitoring and Reporting Program is provided in Attachment E.

R. Standard and Special Provisions. Standard Provisions, which apply to all NPDES permits in accordance with 40 CFR 122.41, and additional conditions applicable to specified categories of permits in accordance with 40 CFR 122.42, are provided in Attachment D. The discharger must comply with all standard provisions and with those additional conditions that are applicable under 40 CFR 122.42. The Regional Water Board has also included in this Order special provisions applicable to the Discharger. A rationale for the special provisions contained in this Order is provided in the Fact Sheet.

S. Provisions and Requirements Implementing State Law. The provisions/requirements in sections III.B, IV.C, V.B, VI.A.2.o, and VI.C.4.c of this Order are included to implement state law only. These provisions/requirements are not required or authorized under the federal CWA; consequently, violations of these provisions/requirements are not subject to the enforcement remedies that are available for NPDES violations.

Deleted: HYDROSCIENCE OPERATIONS, INC.

T. Notification of Interested Parties. The Regional Water Board has notified the Discharger and interested agencies and persons of its intent to prescribe WDRs for the discharge and has provided them with an opportunity to submit their written comments and recommendations. Details of notification are provided in the Fact Sheet of this Order.

U. Consideration of Public Comment. The Regional Water Board, in a public meeting, heard and considered all comments pertaining to the discharge. Details of the Public Hearing are provided in the Fact Sheet.

THEREFORE, IT IS HEREBY ORDERED, that Order No. R5-2005-0032 is rescinded upon the effective date of this Order except for enforcement purposes, and, in order to meet the provisions contained in division 7 of the CWC (commencing with section 13000) and regulations adopted thereunder, and the provisions of the federal CWA and regulations and guidelines adopted thereunder, the Discharger shall comply with the requirements in this Order.

Deleted: HYDROSCIENCE OPERATIONS, INC.

III. DISCHARGE PROHIBITIONS

A. Surface Water Discharge Prohibitions

1. Discharge of wastewater at a location or in a manner different from that described in the Findings is prohibited.

2. The by-pass or overflow of wastes to surface waters is prohibited, except as allowed by federal Standard Provisions I.G. and I.H. (Attachment D).

3. Neither the discharge nor its treatment shall create a nuisance as defined in section 13050 of the CWC.

4. The Discharger shall not allow pollutant-free wastewater to be discharged into the collection, treatment, and disposal system in amounts that significantly diminish the system's capability to comply with this Order. Pollutant-free wastewater means rainfall, groundwater, cooling waters, and condensates that are essentially free of pollutants.

B. Reclaimed Water Prohibitions

1. The use of recycled water in a manner different than described in the Operation and Maintenance (O&M) Plan, as required in section VI.C.4.c of this Order, is prohibited.

2. The use of recycled water, pursuant to this Order, for individually owned residences is prohibited.

3. In conformance with Title 22 Requirements, recycled water shall not be used for direct human consumption or for the processing of food or drink intended for human consumption.

4. The use of recycled water for uses other than landscape irrigation uses is prohibited.

5. The use of recycled water on water-saturated or frozen ground or during periods of precipitation such that runoff is induced, is prohibited.

6. The direct or indirect discharge from use areas of recycled water to surface waters is prohibited except in minor amounts such as that associated with Best Management Practices (BMPs) for good irrigation practices.

7. The application of recycled water within 50 feet of a domestic well, and impoundment of recycled water within 100 feet of a domestic well, unless approved by the California Department of Public Health (DPH; formerly the Department of Health Services) or USEPA, is prohibited.

8. Use or installation of hose bibs in areas accessible by the public on any irrigation system presently operating or designed to operate with recycled water, regardless of construction or identification, is prohibited.

Deleted: HYDROSCIENCE OPERATIONS, INC.

9. Use of any equipment or facilities that have been used to convey recycled water (e.g., tanks, temporary piping or valves, and portable pumps) also used for potable water supply conveyance, is prohibited.

10. The discharge or use of recycled water in a manner that causes or contributes to an exceedance of an applicable water quality objective is prohibited.

11. The use of recycled water for landscape irrigation shall not cause or threaten to cause pollution or nuisance as defined in Water Code section 13050.

IV. EFFLUENT LIMITATIONS AND DISCHARGE SPECIFICATIONS

A. Effluent Limitations – Discharge Point No. 001

1. Final Effluent Limitations

a. The Discharger shall maintain compliance with the following effluent limitations at Discharge Point No. 001, with compliance measured at Monitoring Location EFF-001 as described in the Monitoring and Reporting Program:

Deleted: RSW

Table 6. Final Effluent Limitations

Parameter	Units	Effluent Limitations				
		Average Monthly	Average Weekly	Maximum Daily	Instantaneous Minimum	Instantaneous Maximum
Conventional Pollutants						
Biochemical Oxygen Demand (5-day @ 20°C)	mg/L	10	15	20	--	--
	lbs/day[1]	29	44	58	--	--
	lbs/day[2]	58	88	117	--	--
	lbs/day[3]	73	109	146	--	--
Total Suspended Solids	mg/L	10	15	20	--	--
	lbs/day[1]	29	44	58	--	--
	lbs/day[2]	58	88	117	--	--
	lbs/day[3]	73	109	146	--	--
pH	standard units	--	--	--	6.5	8.5
Priority Pollutants						
Cadmium, Total Recoverable	µg/L	0.05	--	0.10	--	--
Delta-BHC	µg/L	--	--	--	--	ND[4]
Endrin Aldehyde	µg/L	--	--	--	--	ND[4]
Lead, Total Recoverable	µg/L	0.05	--	0.10	--	--
Zinc, Total Recoverable	µg/L	10	--	20	--	--

Formatted: Superscript
Deleted: [2]
Formatted: Superscript
Deleted: [2]
Deleted: [3]
Deleted: [3]

Deleted: HYDROSCIENCE OPERATIONS, INC.

Parameter	Units	Effluent Limitations				
		Average Monthly	Average Weekly	Maximum Daily	Instantaneous Minimum	Instantaneous Maximum
Non-Conventional Pollutants						
Aluminum, Total Recoverable	µg/L	76	--	128	--	--
Ammonia Nitrogen, Total (as N)	mg/L	1.1	--	2.1	--	--
	lbs/day[1]	3.2	--	6.1	--	--
	lbs/day[2]	6.4	--	12	--	--
	lbs/day[3]	8.0	--	15	--	--
Electrical Conductivity @ 25°C	µmhos/cm	700	--	--	--	--
Total Coliform Organisms	MPN/100 mL	--	--	--	--	240

Formatted: Superscript

Deleted: [2]

[1] Mass limitations are based on the maximum average daily flow of 0.35 MGD.

[2] Mass limitations are based on the maximum average daily flow of 0.7 MGD, effective upon compliance with Special Provision VI.C.6.a.

Formatted: Indent: Left: 0 pt, Hanging: 17.85 pt, Tabs: 17.85 pt, Left

[2] Mass limitations based on the maximum average daily flow of 0.875 MGD, effective upon compliance with Special Provision VI.C.6.b.

Deleted: a

[3] ND indicates non-detect. See section VII for the protocol for evaluating compliance with the ND effluent limitation.

b. Percent Removal. The average monthly percent removal of 5-day biochemical oxygen demand (BOD_5) and total suspended solids (TSS) shall not be less than 85 percent.

c. Acute Whole Effluent Toxicity. Survival of aquatic organisms in 96-hour bioassays of undiluted waste shall be no less than:

i. 70%, minimum for any one bioassay; and
ii. 90%, median for any three consecutive bioassays.

d. Total Residual Chlorine. Effluent total residual chlorine shall not exceed:

i. 0.011 mg/L, as a 4-day average; and
ii. 0.019 mg/L, as a 1-hour average.

e. Chronic Whole Effluent Toxicity. There shall be no chronic toxicity in the effluent discharge.

f. Maximum Daily Effluent Flow. The maximum daily effluent flow shall not exceed 0.35 MGD. Effective upon compliance with Special Provision VI.C.6.a, the maximum daily effluent flow shall not exceed 0.7 MGD. Effective upon compliance with Special Provision VI.C.6.b, the maximum daily effluent flow shall not exceed 0.875 MGD.

Deleted: a

Formatted: Keep with next

g. Total Coliform Organisms. Effluent total coliform organisms shall not exceed:

i. 2.2 most probable number (MPN) per 100 mL, as a 7-day median; and

Deleted: HYDROSCIENCE OPERATIONS, INC.

ii. 23 MPN/100 mL, more than once in any 30-day period.

h. Iron, Total Recoverable. For a calendar year, the annual average effluent concentration shall not exceed 300 µg/L.

i. Manganese, Total Recoverable. For a calendar year, the annual average effluent concentration shall not exceed 50 µg/L.

j. Mercury, Total Recoverable. The total monthly mass discharge of total mercury shall not exceed 0.00020 lbs. This performance-based limitation shall be in effect until the Regional Water Board establishes final effluent limitations after adoption of a total maximum daily load (TMDL) for mercury in the Sacramento-San Joaquin Delta.

2. Interim Effluent Limitations – Not Applicable

B. Land Discharge Specifications – Not Applicable

C. Reclamation Specifications

1. Recycled water shall be managed in conformance with the applicable regulations contained in the Title 22 Requirements.

2. All recycled water provided pursuant to this Order shall be treated and managed in conformance with all applicable provisions of the Recycled Water Policy[1].

3. The Discharger shall provide disinfected tertiary treated recycled water that meets the standards for *disinfected tertiary recycled water* as described in CCR Title 22, sections 60301.230 and 60301.320.

4. Application of recycled water to the use areas (landscape irrigation surrounding the Thunder Valley Casino and Facility as described in the Discharger's annual report) shall be at reasonable agronomic rates and shall consider soil, climate, and nutrient demand. Application rates shall ensure that a nuisance is not created. Degradation of groundwater, considering soil, climate, and nutrient demand, shall be minimized consistent with the applicable provisions of the Recycled Water Policy.

5. The seasonal nutritive loading of the use area including the nutritive value of organic and chemical fertilizers and of the recycled water, shall not exceed the nutritive demand of the landscape.

6. Use areas that are spray irrigated and allow public access shall be irrigated during periods of minimal use. Consideration shall be given to allow maximum drying time prior to subsequent public use.

[1] The Recycled Water Policy was adopted on 3 February 2009 under State Water Board Resolution No. 2009-0011.

Deleted: HYDROSCIENCE OPERATIONS, INC.

7. All newly installed or any accessible reclamation equipment, pumps, piping, valves, and outlets shall be appropriately marked to differentiate them from potable facilities. All newly installed or any accessible reclamation distribution system piping shall be purple or adequately identified with purple tape, tags, or stickers per Section 116815(a) of the California Health and Safety Code.

8. Except as allowed under Section 7604 of Title 17, California Code of Regulations, no physical connection shall be made or allowed to exist between any recycled water system and any separate system conveying potable water. Supplementing recycled water with potable water shall not be allowed except as approved by DPH or USEPA.

9. A 4-foot horizontal and 1-foot vertical separation[2] shall be maintained between all new pipelines transporting recycled water and those transporting domestic water, unless approved by DPH or USEPA. Domestic water pipelines shall be configured above recycled water pipelines, unless approved by DPH or USEPA.

10. All recycled water valves, outlets, and quick couplers should be of a type or secured in a manner that only permits operation by authorized personnel.

11. The main shutoff valve of the recycled water meter shall be tagged with a recycled water warning sign. The valve shall be equipped with an appropriate locking device to prevent unauthorized operation of the valve.

12. Except where DPH or USEPA has approved alternative signage and wording or an educational program pursuant to Title 22 Requirements, (1) all use areas (landscape irrigation surrounding the Thunder Valley Casino and Facility as described in the Discharger's annual report) where recycled water is used that are accessible to the public shall be posted with signs that are visible to the public in a size no less than 4 inches high by 8 inches wide that include the following wording "RECYCLED WATER- DO NOT DRINK", and (2) each sign shall display an international symbol similar to that shown in Attachment K.

13. Spray, mist, or runoff of recycled water shall not enter dwellings, designated outdoor eating areas, or food handling facilities. Drinking water fountains shall be protected against contact with recycled water spray, mist, or runoff.

14. Recycled water shall be managed to minimize contact with workers.

15. Best Management Practices (BMPs) shall be developed and implemented to achieve a safe and efficient irrigation system. At a minimum, the Discharger shall implement the required BMPs identified in Attachment L (Section I.A through I.D) and consider implementing other BMPs as appropriate.

16. Recycled water shall not be allowed to escape from the use area (landscape irrigation surrounding the Thunder Valley Casino and Facility as described in the

[2] As measured from the nearest outside edge of the respective pipelines.

Deleted: HYDROSCIENCE OPERATIONS, INC.

Discharger's annual report) by overspray, mist or by surface flow except in minor amounts such as that associated with BMPs for good irrigation practices.

17. Areas irrigated with recycled water shall be managed to prevent ponding and conditions conducive to the proliferation of mosquitoes and other vectors, and to avoid creation of a public nuisance or health hazard. The following practices shall be implemented, at a minimum:

a. Irrigation water must infiltrate completely within a 48-hour period.

b. Ditches receiving irrigation runoff, not serving as wildlife habitat, shall be maintained free of emergent, marginal, and floating vegetation.

c. Low-pressure and unpressurized pipelines and ditches that may be accessible to mosquitoes shall not be used to store recycled water.

18. The Discharger shall discontinue delivery of recycled water during any period in which there is reason to believe that the requirements for use as specified herein or the requirements of DPH or USEPA are not being met. The delivery of recycled water shall not resume until all conditions have been corrected.

V. RECEIVING WATER LIMITATIONS

A. Surface Water Limitations

Receiving water limitations are based on water quality objectives contained in the Basin Plan and are a required part of this Order. The discharge shall not cause the following in Orchard Creek:

1. **Bacteria.** The fecal coliform concentration, based on a minimum of not less than five samples for any 30-day period, to exceed a geometric mean of 200 MPN/100 mL, nor more than 10 percent of the total number of fecal coliform samples taken during any 30-day period to exceed 400 MPN/100 mL.

2. **Biostimulatory Substances.** Water to contain biostimulatory substances which promote aquatic growths in concentrations that cause nuisance or adversely affect beneficial uses.

3. **Chemical Constituents.** Chemical constituents to be present in concentrations that adversely affect beneficial uses.

4. **Color.** Discoloration that causes nuisance or adversely affects beneficial uses.

5. **Dissolved Oxygen:**

   a. The monthly median of the mean daily dissolved oxygen concentration to fall below 85 percent of saturation in the main water mass;

Deleted: HYDROSCIENCE OPERATIONS, INC.

b. The 95 percentile dissolved oxygen concentration to fall below 75 percent of saturation; nor

c. The dissolved oxygen concentration to be reduced below 7.0 mg/L at any time.

6. **Floating Material.** Floating material to be present in amounts that cause nuisance or adversely affect beneficial uses.

7. **Oil and Grease.** Oils, greases, waxes, or other materials to be present in concentrations that cause nuisance, result in a visible film or coating on the surface of the water or on objects in the water, or otherwise adversely affect beneficial uses.

8. **pH.** The pH to be depressed below 6.5, raised above 8.5, nor changed by more than 0.5 units. A 1-month averaging period may be applied when calculating the pH change of 0.5.

9. **Pesticides:**

a. Pesticides to be present, individually or in combination, in concentrations that adversely affect beneficial uses;

b. Pesticides to be present in bottom sediments or aquatic life in concentrations that adversely affect beneficial uses;

c. Total identifiable persistent chlorinated hydrocarbon pesticides to be present in the water column at concentrations detectable within the accuracy of analytical methods approved by USEPA or the Executive Officer;

d. Pesticide concentrations to exceed those allowable by applicable antidegradation policies (see State Water Board Resolution No. 68-16 and 40 CFR 131.12.);

e. Pesticide concentrations to exceed the lowest levels technically and economically achievable;

f. Pesticides to be present in concentration in excess of the maximum contaminant levels set forth in CCR, Title 22, division 4, chapter 15; nor

g. Thiobencarb to be present in excess of 1.0 µg/L.

10. **Radioactivity:**

a. Radionuclides to be present in concentrations that are harmful to human, plant, animal, or aquatic life nor that result in the accumulation of radionuclides in the food web to an extent that presents a hazard to human, plant, animal, or aquatic life.

b. Radionuclides to be present in excess of the maximum contaminant levels specified in Table 4 (MCL Radioactivity) of Section 64443 of Title 22 of the California Code of Regulations.

Deleted: HYDROSCIENCE OPERATIONS, INC.

13. **Suspended Sediments.** The suspended sediment load and suspended sediment discharge rate of surface waters to be altered in such a manner as to cause nuisance or adversely affect beneficial uses.

14. **Settleable Substances.** Substances to be present in concentrations that result in the deposition of material that causes nuisance or adversely affects beneficial uses.

15. **Suspended Material.** Suspended material to be present in concentrations that cause nuisance or adversely affect beneficial uses.

16. **Taste and Odors.** Taste- or odor-producing substances to be present in concentrations that impart undesirable tastes or odors to fish flesh or other edible products of aquatic origin, or that cause nuisance, or otherwise adversely affect beneficial uses.

17. **Temperature.** The natural temperature to be increased by more than 5°F.

18. **Toxicity.** Toxic substances to be present, individually or in combination, in concentrations that produce detrimental physiological responses in human, plant, animal, or aquatic life.

19. **Turbidity.** The turbidity to increase as follows:

    a. More than 1 Nephelometric Turbidity Unit (NTU) where natural turbidity is between 0 and 5 NTUs;

    b. More than 20 percent where natural turbidity is between 5 and 50 NTUs;

    c. More than 10 NTU where natural turbidity is between 50 and 100 NTUs; nor

    d. More than 10 percent where natural turbidity is greater than 100 NTUs.

B. Groundwater Limitations

1. The discharge from the Facility shall not cause the underlying groundwater to be degraded.

VI. PROVISIONS

A. Standard Provisions

1. The Discharger shall comply with all Standard Provisions (federal NPDES standard conditions from 40 CFR Part 122) included in Attachment D of this Order.

2. The Discharger shall comply with the following provisions:

    a. If the Discharger's wastewater treatment plant is publicly owned or subject to regulation by California Public Utilities Commission, it shall be supervised and

Deleted: HYDROSCIENCE OPERATIONS, INC.

operated by persons possessing certificates of appropriate grade according to Title 23, CCR, division 3, chapter 26.

b. After notice and opportunity for a hearing, this Order may be terminated or modified for cause, including, but not limited to:

i. violation of any term or condition contained in this Order;

ii. obtaining this Order by misrepresentation or by failing to disclose fully all relevant facts;

iii. a change in any condition that requires either a temporary or permanent reduction or elimination of the authorized discharge; and

iv. a material change in the character, location, or volume of discharge.

The causes for modification include:

- *New regulations.* New regulations have been promulgated under section 405(d) of the CWA, or the standards or regulations on which the permit was based have been changed by promulgation of amended standards or regulations or by judicial decision after the permit was issued.

- *Land application plans.* When required by a permit condition to incorporate a land application plan for beneficial reuse of sewage sludge, to revise an existing land application plan, or to add a land application plan.

- *Change in sludge use or disposal practice.* Under 40 CFR 122.62(a)(1), a change in the Discharger's sludge use or disposal practice is a cause for modification of the permit. It is cause for revocation and reissuance if the Discharger requests or agrees.

The Regional Water Board may review and revise this Order at any time upon application of any affected person or the Regional Water Board's own motion.

c. If a toxic effluent standard or prohibition (including any scheduled compliance specified in such effluent standard or prohibition) is established under section 307(a) of the CWA, or amendments thereto, for a toxic pollutant that is present in the discharge authorized herein, and such standard or prohibition is more stringent than any limitation upon such pollutant in this Order, the Regional Water Board will revise or modify this Order in accordance with such toxic effluent standard or prohibition.

The Discharger shall comply with effluent standards and prohibitions within the time provided in the regulations that establish those standards or prohibitions, even if this Order has not yet been modified.

d. This Order shall be modified, or alternately revoked and reissued, to comply with any applicable effluent standard or limitation issued or approved under sections

Deleted: HYDROSCIENCE OPERATIONS, INC.

301(b)(2)(C) and (D), 304(b)(2), and 307(a)(2) of the CWA, if the effluent standard or limitation so issued or approved:

i. contains different conditions or is otherwise more stringent than any effluent limitation in the Order; or

ii. controls any pollutant limited in the Order.

The Order, as modified or reissued under this paragraph, shall also contain any other requirements of the CWA then applicable.

e. The provisions of this Order are severable. If any provision of this Order is found invalid, the remainder of this Order shall not be affected.

f. The Discharger shall take all reasonable steps to minimize any adverse effects to waters of the State or users of those waters resulting from any discharge or sludge use or disposal in violation of this Order. Reasonable steps shall include such accelerated or additional monitoring as necessary to determine the nature and impact of the non-complying discharge or sludge use or disposal.

g. The Discharger shall ensure compliance with any existing or future pretreatment standard promulgated by USEPA under section 307 of the CWA, or amendment thereto, for any discharge to the municipal system.

h. A copy of this Order shall be maintained at the discharge facility and be available at all times to operating personnel. Key operating personnel shall be familiar with its content.

i. Safeguard to electric power failure:

i. The Discharger shall provide safeguards to assure that, should there be reduction, loss, or failure of electric power, the discharge shall comply with the terms and conditions of this Order.

ii. Upon written request by the Regional Water Board the Discharger shall submit a written description of safeguards. Such safeguards may include alternate power sources, standby generators, retention capacity, operating procedures, or other means. A description of the safeguards provided shall include an analysis of the frequency, duration, and impact of power failures experienced over the past 5 years on effluent quality and on the capability of the Discharger to comply with the terms and conditions of the Order. The adequacy of the safeguards is subject to the approval of the Regional Water Board.

iii. Should the treatment works not include safeguards against reduction, loss, or failure of electric power, or should the Regional Water Board not approve the existing safeguards, the Discharger shall, within 90 days of having been advised in writing by the Regional Water Board that the existing safeguards are inadequate, provide to the Regional Water Board and USEPA a schedule

Deleted: HYDROSCIENCE OPERATIONS, INC.

of compliance for providing safeguards such that in the event of reduction, loss, or failure of electric power, the Discharger shall comply with the terms and conditions of this Order. The schedule of compliance shall, upon approval of the Regional Water Board, become a condition of this Order.

j. The Discharger, upon written request of the Regional Water Board, shall file with the Board a technical report on its preventive (failsafe) and contingency (cleanup) plans for controlling accidental discharges, and for minimizing the effect of such events. This report may be combined with that required under Regional Water Board Standard Provision contained in section VI.A.2.i. of this Order.

The technical report shall:

i. Identify the possible sources of spills, leaks, untreated waste by-pass, and contaminated drainage. Loading and storage areas, power outage, waste treatment unit outage, and failure of process equipment, tanks and pipes should be considered.

ii. Evaluate the effectiveness of present facilities and procedures and state when they became operational.

iii. Predict the effectiveness of the proposed facilities and procedures and provide an implementation schedule containing interim and final dates when they will be constructed, implemented, or operational.

The Regional Water Board, after review of the technical report, may establish conditions which it deems necessary to control accidental discharges and to minimize the effects of such events. Such conditions shall be incorporated as part of this Order, upon notice to the Discharger.

k. A publicly owned treatment works whose waste flow has been increasing, or is projected to increase, shall estimate when flows will reach hydraulic and treatment capacities of its treatment and disposal facilities. The projections shall be made in January, based on the last 3 years' average dry weather flows, peak wet weather flows and total annual flows, as appropriate. When any projection shows that capacity of any part of the facilities may be exceeded in 4 years, the Discharger shall notify the Regional Water Board by 31 January. A copy of the notification shall be sent to appropriate local elected officials, local permitting agencies and the press. Within 120 days of the notification, the Discharger shall submit a technical report showing how it will prevent flow volumes from exceeding capacity or how it will increase capacity to handle the larger flows. The Regional Water Board may extend the time for submitting the report.

l. The Discharger shall submit technical reports as directed by the Executive Officer. All technical reports required herein that involve planning, investigation, evaluation, or design, or other work requiring interpretation and proper application of engineering or geologic sciences, shall be prepared by or under the direction of persons registered to practice in California pursuant to California

Deleted: HYDROSCIENCE OPERATIONS, INC.

Business and Professions Code, sections 6735, 7835, and 7835.1. To demonstrate compliance with Title 16, CCR, sections 415 and 3065, all technical reports must contain a statement of the qualifications of the responsible registered professional(s). As required by these laws, completed technical reports must bear the signature(s) and seal(s) of the registered professional(s) in a manner such that all work can be clearly attributed to the professional responsible for the work.

m. The Regional Water Board is authorized to enforce the terms of this permit under several provisions of the CWC, including, but not limited to, sections 13385, 13386, and 13387.

n. For publicly owned treatment works, prior to making any change in the point of discharge, place of use, or purpose of use of treated wastewater that results in a decrease of flow in any portion of a watercourse, the Discharger must file a petition with the State Water Board, Division of Water Rights, and receive approval for such a change. (CWC section 1211).

o. In the event the Discharger does not comply or will be unable to comply for any reason, with any prohibition, maximum daily effluent limitation, 1-hour average effluent limitation, or receiving water limitation contained in this Order, the Discharger shall notify the Regional Water Board by telephone (916) 464-3291 within 24 hours of having knowledge of such noncompliance, and shall confirm this notification in writing within 5 days, unless the Regional Water Board waives confirmation. The written notification shall include the information required by the Standard Provision contained in Attachment D section V.E.1. [40 CFR 122.41(l)(6)(i)].

p. Failure to comply with provisions or requirements of this Order, or violation of other applicable laws or regulations governing discharges from this facility, may subject the Discharger to administrative or civil liabilities, criminal penalties, and/or other enforcement remedies to ensure compliance. Additionally, certain violations may subject the Discharger to civil or criminal enforcement from appropriate local, state, or federal law enforcement entities.

q. In the event of any change in control or ownership of land or waste discharge facilities presently owned or controlled by the Discharger, the Discharger shall notify the succeeding owner or operator of the existence of this Order by letter, a copy of which shall be immediately forwarded to the Regional Water Board.

To assume operation under this Order, the succeeding owner or operator must apply in writing to the Executive Officer requesting transfer of the Order. The request must contain the requesting entity's full legal name, the state of incorporation if a corporation, address and telephone number of the persons responsible for contact with the Regional Water Board and a statement. The statement shall comply with the signatory and certification requirements in the federal Standard Provisions (Attachment D, section V.B) and state that the new owner or operator assumes full responsibility for compliance with this Order.

Deleted: HYDROSCIENCE OPERATIONS, INC.

Failure to submit the request shall be considered a discharge without requirements, a violation of the CWC. Transfer shall be approved or disapproved in writing by the Executive Officer.

B. Monitoring and Reporting Program Requirements

The Discharger shall comply with the Monitoring and Reporting Program, and future revisions thereto, in Attachment E of this Order.

C. Special Provisions

1. Reopener Provisions

a. Conditions that necessitate a major modification of a permit are described in 40 CFR 122.62, including:

i. If new or amended applicable water quality standards are promulgated or approved pursuant to section 303 of the CWA, or amendments thereto, this permit may be reopened and modified in accordance with the new or amended standards.

ii. When new information, that was not available at the time of permit issuance, would have justified different permit conditions at the time of issuance.

b. This Order may be reopened for modification, or revocation and reissuance, as a result of the detection of a reportable priority pollutant generated by special conditions included in this Order. These special conditions may be, but are not limited to, fish tissue sampling, whole effluent toxicity, monitoring requirements on internal waste stream(s), and monitoring for surrogate parameters. Additional requirements may be included in this Order as a result of the special condition monitoring data.

c. Mercury. If mercury is found to be causing toxicity based on acute or chronic toxicity test results, or if a TMDL program is adopted, this Order shall be reopened and the performance-based mass effluent limitation modified (higher or lower) or an effluent concentration limitation imposed. If the Regional Water Board determines that a mercury offset program is feasible for dischargers subject to a NPDES permit, then this Order may be reopened to reevaluate the interim mercury mass loading limitation(s) and the need for a mercury offset program for the Discharger.

d. Whole Effluent Toxicity. As a result of a Toxicity Reduction Evaluation (TRE), this Order may be reopened to include a new chronic toxicity limitation, a new acute toxicity limitation, and/or a limitation for a specific toxicant identified in the TRE. Additionally, if the State Water Board revises the SIP's toxicity control provisions that would require the establishment of numeric chronic toxicity effluent limitations, this Order may be reopened to include a numeric chronic toxicity effluent limitation based on the new provisions.

Deleted: HYDROSCIENCE OPERATIONS, INC.

e. **Water Effects Ratios (WER) and Metal Translators.** Except for copper, a default WER of 1.0 has been used in this Order for calculating CTR criteria for applicable priority pollutant inorganic constituents. In addition, default dissolved-to-total metal translators have been used to convert water quality objectives from dissolved to total recoverable when developing effluent limitations for cadmium, lead and zinc. If the Discharger performs studies to determine site-specific WERs and/or site-specific dissolved-to-total metal translators, this Order may be reopened to modify the effluent limitations for the applicable inorganic constituents.

2. **Special Studies, Technical Reports and Additional Monitoring Requirements**

a. **Chronic Whole Effluent Toxicity.** For compliance with the Basin Plan's narrative toxicity objective, this Order requires the Discharger to conduct chronic whole effluent toxicity (WET) testing, as specified in the Monitoring and Reporting Program (Attachment E, section V). Furthermore, this Provision requires the Discharger to investigate the causes of, and identify corrective actions to reduce or eliminate effluent toxicity. If the discharge exhibits a pattern of toxicity exceeding the numeric toxicity monitoring trigger during accelerated monitoring established in this Provision, the Discharger is required to initiate a Toxicty Reduction Evaluation (TRE) in accordance with an approved TRE Workplan, and take actions to mitigate the impact of the discharge and prevent recurrence of toxicity. A TRE is a site-specific study conducted in a stepwise process to identify the source(s) of toxicity and the effective control measures for effluent toxicity. TREs are designed to identify the causative agents and sources of effluent toxicity, evaluate the effectiveness of the toxicity control options, and confirm the reduction in effluent toxicity. This Provision includes requirements for the Discharger to develop and submit a TRE Workplan and includes procedures for accelerated chronic toxicity monitoring and TRE initiation.

i. **Toxicity Reduction Evaluation (TRE) Workplan**. Within 90 days of the effective date of this Order, the Discharger shall submit to the Regional Water Board a TRE Workplan for approval by the Executive Officer. The TRE Workplan shall outline the procedures for identifying the source(s) of, and reducing or eliminating effluent toxicity. The TRE Workplan must be developed in accordance with USEPA guidance[3] and be of adequate detail to allow the Discharger to immediately initiate a TRE as required in this Provision.

(a) A description of the investigation and evaluation techniques that will be used to identify potential causes and sources of effluent toxicity, effluent variability, and treatment system efficiency;

[3] See the Fact Sheet (Attachment F, section VII.B.2.a. for a list of USEPA guidance documents that must be considered in the development of the TRE Workplan.)

Deleted: HYDROSCIENCE OPERATIONS, INC.

(b) A description of the facility's methods of maximizing in-house treatment efficiency and good housekeeping practices, and a list of all chemicals used in operation of the facility; and

(c) A discussion of who will conduct the Toxicity Identification Evaluation (TIE), if necessary (e.g., an in-house expert or outside contractor).

ii. Accelerated Monitoring and TRE Initiation. When the numeric toxicity monitoring trigger is exceeded during regular chronic toxicity monitoring, and the testing meets all test acceptability criteria, the Discharger shall initiate accelerated monitoring as required in the Accelerated Monitoring Specifications. The Discharger shall initiate a TRE to address effluent toxicity if any WET testing results exceed the numeric toxicity monitoring trigger during accelerated monitoring.

iii. Numeric Toxicity Monitoring Trigger. The numeric toxicity monitoring trigger to initiate a TRE is >1 TU_C (where TU_C = 100/NOEC). The monitoring trigger is not an effluent limitation; it is the toxicity threshold at which the Discharger is required to begin accelerated monitoring and initiate a TRE when the effluent exhibits a pattern of toxicity.

iv. Accelerated Monitoring Specifications. If the numeric toxicity monitoring trigger is exceeded during regular chronic toxicity testing, the Discharger shall initiate accelerated monitoring within 14 days of notification by the laboratory of the exceedance. Accelerated monitoring shall consist of four (4) chronic toxicity tests conducted once every 2 weeks using the species that exhibited toxicity. The following protocol shall be used for accelerated monitoring and TRE initiation:

(a) If the results of four (4) consecutive accelerated monitoring tests do not exceed the monitoring trigger, the Discharger may cease accelerated monitoring and resume regular chronic toxicity monitoring. However, notwithstanding the accelerated monitoring results, if there is adequate evidence of a pattern of effluent toxicity, the Executive Officer may require that the Discharger initiate a TRE.

(b) If the source(s) of the toxicity is easily identified (e.g., temporary plant upset), the Discharger shall make necessary corrections to the facility and shall continue accelerated monitoring until four (4) consecutive accelerated tests do not exceed the monitoring trigger. Upon confirmation that the effluent toxicity has been removed, the Discharger may cease accelerated monitoring and resume regular chronic toxicity monitoring.

(c) If the result of any accelerated toxicity test exceeds the monitoring trigger, the Discharger shall cease accelerated monitoring and begin a TRE to investigate the cause(s) of, and identify corrective actions to reduce or eliminate effluent toxicity. Within thirty (30) days of notification by the laboratory of any test result exceeding the monitoring trigger during

Deleted: HYDROSCIENCE OPERATIONS, INC.

accelerated monitoring, the Discharger shall submit a TRE Action Plan to the Regional Water Board including, at minimum:

(1) Specific actions the Discharger will take to investigate and identify the cause(s) of toxicity, including a TRE WET monitoring schedule;

(2) Specific actions the Discharger will take to mitigate the impact of the discharge and prevent the recurrence of toxicity; and

(3) A schedule for these actions.

3. Best Management Practices and Pollution Prevention

a. Salinity Evaluation and Minimization Plan. The Discharger shall prepare a salinity evaluation and minimization plan to address sources of salinity from the Facility. The plan shall be completed and submitted to the Regional Water Board **within 9 months of the adoption date of this Order** for the approval by the Executive Officer.

4. Construction, Operation and Maintenance Specifications

a. The treatment facilities shall be designed, constructed, operated, and maintained to prevent inundation or washout due to floods with a 100-year return frequency.

b. Ultraviolet Disinfection (UV) System Operating Specifications. The Discharger shall operate the UV disinfection system to provide a minimum UV dose per bank of 100 millijoules per square centimeter (mJ/cm2) at peak daily flow, unless otherwise approved by DPH, and shall maintain an adequate dose for disinfection while discharging to Orchard Creek, unless otherwise approved by DPH.

i. The Discharger shall provide continuous, reliable monitoring of flow, UV transmittance, UV power, and turbidity.

ii. The Discharger shall operate the treatment system to insure that turbidity prior to disinfection shall not exceed 2 NTU as a daily average, and 5 NTU more than 5 percent of the time within a 24-hour period, and 10 NTU, at any time.

iii. The UV transmittance (at 254 nanometers) in the wastewater exiting the UV disinfection system shall not fall below 55 percent of maximum at any time.

iv. The quartz sleeves and cleaning system components must be visually inspected per the manufacturer's operations manual for physical wear (scoring, solarization, seal leaks, cleaning fluid levels, etc.) and to check the efficacy of the cleaning system.

v. The lamp sleeves must be cleaned periodically as necessary to meet the requirements.

Deleted: HYDROSCIENCE OPERATIONS, INC.

vi. Lamps must be replaced per the manufacturer's operations manual, or sooner, if there are indications the lamps are failing to provide adequate disinfection. Lamp age and lamp replacement records must be maintained.

vii. The Facility must be operated in accordance with an operations and maintenance program that assures adequate disinfection.

c. Reclaimed Water

i. The Discharger's responsibilities are as follows:

(a) The Discharger shall be responsible for ensuring that recycled water meets the quality standards of this Order.

(b) The Discharger shall be responsible for the operation and maintenance of transport facilities and associated appurtenances necessary to convey and distribute the recycled water from the point of production to the point of use with all applicable Title 22 requirements.

(c) The Discharger shall be responsible for the application and use of recycled water in the use area (landscape irrigation surrounding the Thunder Valley Casino and Facility as described in the Discharger's annual report) and for associated operation and maintenance in accordance with all applicable Title 22 requirements and this Order. The Discharger is also responsible for ensuring that the minimum land application acreage and impoundment capacity to comply with the terms and conditions of this Order are maintained.

ii. The Discharger shall comply with the monitoring and reporting requirements in the Monitoring and Reporting Program (Attachment E) for recycled water.

iii. The Discharger shall designate a Recycled Water Use Supervisor for the use area. The Recycled Water Use Supervisor shall be responsible for the recycled water system within the use area (landscape irrigation surrounding the Thunder Valley Casino and Facility as described in the Discharger's annual report). Specific responsibilities of the Recycled Water Use Supervisor, at a minimum, shall include the following:

(a) Proper installation, operation and maintenance of irrigation systems;

(b) Control of on-site piping to prevent any cross-connections with potable water supplies;

(c) Development of and implementation of a set of procedures to verify on an ongoing basis that cross-connections have not occurred between potable water supplies and recycled water supplies;

Deleted: HYDROSCIENCE OPERATIONS, INC.

(d) Routine inspection and maintenance of backflow prevention devices installed to protect potable water supplies, consistent with section 7605 of Title 17, California Code of Regulations; and

(e) General responsibilities to ensure compliance with this Order and continuous implementation of any BMPs identified as necessary to prevent potential hazards to public health and to protect the environment.

iv. Within 30 days of the adoption date of this Order, the Discharger shall submit an O&M Plan to the Regional Water Board. An O&M Plan shall contain the following elements:

(a) An Operations Plan. A detailed operations plan for the use area (landscape irrigation surrounding the Thunder Valley Casino and Facility) including methods and procedures for implementation of regulations regarding recycled water use and maintenance of equipment and emergency backup systems to maintain compliance with the conditions of this Order and DPH or USEPA requirements (i.e., identification of BMPs implemented to achieve and maintain compliance).

(b) An Irrigation Management Plan. The Irrigation Management Plan shall include measures to ensure the use of recycled water occurs at an agronomic rate while employing practices to ensure irrigation efficiency necessary to minimize application of salinity constituents (by mass) to the recycled water use area. The Irrigation Management Plan shall account for the following:

(1) Soil characteristics;

(2) Recycled water characteristics (nutrients, including nitrogen and phosphorous content; specific ion toxicity, including chloride, boron, sodium, bicarbonate; and other parameters);

(3) General requirements of the major plant species being irrigated (e.g., seasonal demand, climate, nutrient requirements);

(4) Climatic conditions (e.g., precipitation, evapotranspiration rate, wind);

(5) Other supplemental nutrient additions (e.g., chemical fertilizers) generally used within the Use Area; and

(6) Management of impoundments used to store or collect recycled water.

Where conditions VI.C.4.c.v.(b)(1) thru (5) vary substantially across a service area, the Irrigation Management Plan shall also include sub-basin irrigation management plans that ensure the use of recycled water occurs at an agronomic rate while employing practices to ensure irrigation efficiency necessary to minimize application of salinity constituents (by mass).

Deleted: HYDROSCIENCE OPERATIONS, INC.

(c) A summary of the applicable approved Title 22 Engineering Report submitted to DPH or USEPA. The summary of the Title 22 Engineering Report shall address the following:

(1) Method(s) of wastewater treatment and manner for achieving disinfected tertiary recycled water;

(2) Method(s) to be used to assure that the installation and operation of the recycled system will not result in cross-connections between the recycled water and potable water piping systems;

(3) Any recommendations or "conditions of approval" provided by DPH or USEPA; and

(4) A copy of any approval letter(s) prepared by DPH or USEPA.

The Discharger may provide a copy of the complete approved Title 22 Engineering Report in lieu of a summary. The Title 22 Engineering Report shall be available upon request for review and inspection.

(d) A copy of the Discharger's established rules and/or regulations as approved by DPH or USEPA governing the design and construction of recycled water use facilities and the use of recycled water in accordance with the criteria established in the Title 22 Requirements and this Order.

(e) A copy of the written (and signed) agreement between the respective parties responsible for producing, distributing, and using recycled water.

(f) Recycled Water Use Supervisor responsibilities and training.

(1) Documentation of or examples from a training program including periodic education for Recycled Water Use Supervisors. At a minimum, such training programs shall include the following elements:

- The safe and efficient operation and maintenance of recycled water use facilities.
- Prevention and runoff from Recycled Water Use Areas.
- Matching irrigation rates to the water requirements of the landscape, and not applying when the soil is saturated[4].
- Means for ensuring recycled water and other supplemental nutrients (including fertilizers) are used pursuant to the Irrigation Management Plan (i.e., at agronomic rates[5]).

[4] Accounting for soil saturation conditions.
[5] Including accounting for fertilizers.

Deleted: HYDROSCIENCE OPERATIONS, INC.

- Prevention of cross-connections with potable water systems.

v. The Discharger shall maintain and comply with the O&M Plan, and all portions thereof including the Irrigation Management Plan submitted pursuant to this Order and the applicable Title 22 Engineering Report. To demonstrate compliance with this provision, the Discharger may develop a pamphlet, brochure, or other educational materials, that convey the key operational elements (e.g., prevention of cross-connections, how to adjust fertilization rates, impoundment practices, etc.) of the O&M Plan to the Recycled Water Use Supervisor. The Discharger shall also ensure compliance with any applicable Salt and Nutrient Management Plans.

vi. Amendments to the approved Title 22 Engineering Report as well as a description of new use sites shall be submitted to the appropriate public health authority for approval in advance of connection. The Discharger shall include in the annual report submitted to the Regional Water Board copies of approval letter(s) prepared by DPH or USEPA regarding (1) such amendments to the Title 22 Engineering Report and (2) a description of new sites.

vii. The Discharger shall ensure that periodic inspections are conducted of the use area (landscape irrigation surrounding the Thunder Valley Casino and Facility) they supply at a frequency approved by DPH or USEPA (but no less than annually), including an adaptive approach to address the use area with a record of compliance concerns. The Discharger shall also establish procedures to monitor and assure compliance with conditions of this Order. The Discharger shall also ensure that regular inspections occur to assure cross-connections with potable water systems are not made and air-gap devices are installed and operable.

viii. The Discharger shall keep a copy of the O&M Plan and this Order, including its Monitoring and Reporting Program, and attachments in a location where they can be easily referenced by operating personnel. Key operating personnel, including the Recycled Water Use Supervisor, shall be familiar with its contents.

ix. The Discharger shall at all times properly operate and maintain all facilities and systems of treatment and control (and related appurtenances) that are installed to achieve compliance with the conditions of this Order.

x. All technical reports required herein that involve planning, investigation, evaluation, or design, or other work requiring interpretation and proper application of engineering or geologic sciences, shall be prepared by or under the direction of persons registered to practice in California pursuant to California Business and Professions Code[6]. To demonstrate compliance with sections 415 and 3065 of Title 16, CCR, all technical reports must contain a

[6] Sections 6735, 7835, and 7835.1.

Deleted: HYDROSCIENCE OPERATIONS, INC.

statement of the qualifications of the responsible registered professional(s). As required by these laws, completed technical reports must bear the signature(s) and seal(s) of the registered professional(s) in a manner such that all work can be clearly attributed to the professional responsible for the work.

xi. All storm water discharges, including conditionally authorized or exempted non-storm water discharges, from recycled water use areas must comply with the lawful requirements of municipalities, counties, drainage districts, and/or other local agencies, regarding discharges of storm water to Municipal Separate Storm Sewer Systems (MS4s) under their jurisdiction.

xii. It is the responsibility of the Discharger to make inquiry and to obtain any local, State, or federal governmental agency permits or authorizations prior to the distribution and use of recycled water for landscape irrigation.

d. Title 22 Requirements. Wastewater shall be oxidized, coagulated, filtered, and adequately disinfected pursuant to the DPH reclamation criteria, CCR, Title 22, division 4, chapter 3, (Title 22), or equivalent.

5. Special Provisions for Municipal Facilities (POTWs Only)

a. Sludge/Biosolids Discharge Specifications

i. Collected screenings, residual sludge, biosolids, and other solids removed from liquid wastes shall be disposed of in a manner approved by the Executive Officer, and consistent with Consolidated Regulations for Treatment, Storage, Processing, or Disposal of Solid Waste, as set forth in Title 27, CCR, division 2, subdivision 1, section 20005, et seq. Removal for further treatment, disposal, or reuse at sites (e.g., landfill, composting sites, soil amendment sites) that are operated in accordance with valid waste discharge requirements issued by a Regional Water Board will satisfy these specifications.

ii. Sludge and solid waste shall be removed from screens, sumps, ponds, clarifiers, etc. as needed to ensure optimal plant performance.

iii. The treatment of sludge generated at the Facility shall be confined to the Facility property and conducted in a manner that precludes infiltration of waste constituents into soils in a mass or concentration that will violate groundwater limitations in section V.B. of this Order. In addition, the storage of residual sludge, solid waste, and biosolids on Facility property shall be temporary and controlled, and contained in a manner that minimizes leachate formation and precludes infiltration of waste constituents into soils in a mass or concentration that will violate groundwater limitations included in section V.B. of this Order.

Deleted: HYDROSCIENCE OPERATIONS, INC.

iv. The use and disposal of biosolids shall comply with existing federal and state laws and regulations, including permitting requirements and technical standards included in 40 CFR Part 503. If the State Water Board and the Regional Water Board are given the authority to implement regulations contained in 40 CFR Part 503, this Order may be reopened to incorporate appropriate time schedules and technical standards. The Discharger must comply with the standards and time schedules contained in 40 CFR Part 503 whether or not they have been incorporated into this Order.

b. Biosolids Disposal Requirements

i. The Discharger shall comply with the Monitoring and Reporting Program for biosolids disposal contained in Attachment E.

ii. Any proposed change in biosolids use or disposal practice from a previously approved practice shall be reported to the Executive Officer and USEPA Regional Administrator at least 90 days in advance of the change.

iii. The Discharger is encouraged to comply with the "Manual of Good Practice for Agricultural Land Application of Biosolids" developed by the California Water Environment Association.

c. Biosolids Storage Requirements

i. Facilities for the storage of Class B biosolids shall be located, designed and maintained to restrict public access to biosolids.

ii. Biosolids storage facilities shall be designed and maintained to prevent washout or inundation from a storm or flood with a return frequency of 100 years.

iii. Biosolids storage facilities, which contain biosolids, shall be designed and maintained to contain all storm water falling on the biosolids storage area during a rainfall year with a return frequency of 100 years.

iv. Biosolids storage facilities shall be designed, maintained and operated to minimize the generation of leachate.

d. Sanitary Sewer System Operation, Maintenance, and Overflow Protection. The Discharger shall maintain all portions of the wastewater collection system to assure compliance with this Order. Collections system overflows and/or discharges are prohibited by this Order.

All violations of this Order must be reported as specified in the Standard Provisions (Attachment D) and the public shall be notified, in coordination with DPH or USEPA, in areas that have been contaminated with sewage. All parties with a reasonable potential for exposure to a sewage overflow shall be notified.

Formatted: Not Highlight

Deleted: HYDROSCIENCE OPERATIONS, INC.

e. **Continuous Monitoring Systems.** This permit, and the Monitoring and Reporting Program which is a part of this permit, requires that certain parameters be monitored on a continuous basis. The wastewater treatment plant is not staffed on a full time basis. Permit violations or system upsets can go undetected during this period. The Discharger is required to establish an electronic system for operator notification for continuous recording device alarms. The Discharger has a system in place to automatically contact facility operators in the event of alarms generated at the wastewater treatment plant. The Discharger shall upgrade this system with future facility expansions/upgrades, as necessary, to ensure timely notification. For continuous monitoring systems installed following permit adoption, the notification system shall be installed simultaneously.

6. **Other Special Provisions**

a. **Facility Expansion.** The Discharger has requested an expansion of allowable flows to be discharged to Orchard Creek. The permitted maximum daily effluent flow may increase to 0.7 MGD upon compliance with the following conditions:

xiii. **Effluent and Receiving Water Limitation Compliance.** The discharge shall demonstrate compliance with Effluent Limitations IV.A and Receiving Water Surface Limitations V.A.

xiv. **Facility Expansions.** The Discharger shall have completed construction of the first phase of the Thunder Valley Casino Upgrade Project, as described in the Discharger's Report of Waste Discharge.

xv. **Request for Increase.** The Discharger shall submit to the Regional Water Board a request for an increase in the permitted discharge flow rate, which demonstrates compliance with items i. through ii. of this provision. The increase in the permitted discharge flow rate shall not be effective until the Executive Officer verifies compliance with Special Provisions VI.C.6.a and approves the Discharger's request.

b. **Facility Expansion.** The Discharger has requested an expansion of allowable flows to be discharged to Orchard Creek. The permitted maximum daily effluent flow may increase to 0.875 MGD upon compliance with the following conditions:

i. **Effluent and Receiving Water Limitation Compliance.** The discharge shall demonstrate compliance with Effluent Limitations IV.A and Receiving Water Surface Limitations V.A.

ii. **Facility Expansions.** The Discharger shall have completed construction of the second phase of the Thunder Valley Casino Upgrade Project, as described in the Discharger's Report of Waste Discharge.

iii. **Request for Increase.** The Discharger shall submit to the Regional Water Board a request for an increase in the permitted discharge flow rate, which

Deleted: HYDROSCIENCE OPERATIONS, INC.

demonstrates compliance with items i. through ii. of this provision. The increase in the permitted discharge flow rate shall not be effective until the Executive Officer verifies compliance with Special Provisions VI.C.6.b and approves the Discharger's request.

Deleted: a

7. Compliance Schedules – Not Applicable

VII. COMPLIANCE DETERMINATION

A. BOD_5 and TSS Effluent Limitations (Section IV.A.1.a and IV.A.1.b). Compliance with the final effluent limitations for BOD_5 and TSS required in Limitations and Discharge Requirements sections IV.A.1.a shall be ascertained by 24-hour composite samples. Compliance with effluent limitations required in Limitations and Discharge Requirements sections IV.A.1.b for percent removal shall be calculated using the arithmetic mean of BOD_5 and TSS in effluent samples collected over a monthly period as a percentage of the arithmetic mean of the values for influent samples collected at approximately the same times during the same period.

B. Aluminium Effluent Limitations (Section IV.A.1.a). Compliance with the final effluent limitations for aluminum can be demonstrated using either total or acid-soluble (inductively coupled plasma/atomic emission spectrometry or inductively coupled plasma/mass spectrometry) analysis methods, as supported by USEPA's Ambient Water Quality Criteria for Aluminum document (EPA 440/5-86-008), or other standard methods that exclude aluminum silicate particles as approved by the Executive Officer.

C. Total Mercury Mass Loading Effluent Limitations (Section IV.A.1.j). The procedures for calculating mass loadings are as follows:

1. The total pollutant mass load for each individual calendar month shall be determined using an average of all concentration data collected that month and the corresponding total monthly flow. All effluent monitoring data collected under the monitoring and reporting program, pretreatment program and any special studies shall be used for these calculations.

2. In calculating compliance, the Discharger shall count all non-detect measures at one-half of the detection level. If compliance with the effluent limitation is not attained due to the non-detect contribution, the Discharger shall improve and implement available analytical capabilities and compliance shall be evaluated with consideration of the detection limits.

Deleted: HYDROSCIENCE OPERATIONS, INC.

D. Mass Effluent Limitations (Section IV.A.1.j). The mass effluent limitations contained in Limitations and Discharge Requirements section IV.A.1.a are based on the permitted maximum daily effluent flow and calculated as follows:

Deleted: Final Effluent Limitations

Mass (lbs/day) = Flow (MGD) x Concentration (mg/L) x 8.34 (conversion factor)

E. Total Coliform Organisms Effluent Limitations (Section IV.A.1.g.i). For each day that an effluent sample is collected and analyzed for total coliform organisms, the 7-day median shall be determined by calculating the median concentration of total coliform bacteria in the effluent utilizing the bacteriological results of the last 7 days for which analyses have been completed. If the 7-day median of total coliform organisms exceeds a most probable number (MPN) of 2.2 per 100 milliliters, the Discharger will be considered out of compliance for that parameter for that 1 day only within the reporting period.

F. Instantaneous Maximum Effluent Limitation for Delta-BHC and Endrin Aldehyde (Section IV.A.1.a). The Discharger shall use USEPA standard analytical techniques for analyzing delta-BHC and endrin aldehyde with a maximum reporting level not to exceed the minimum levels listed in Appendix 4 of the SIP (Table 2d). If the analytical result of a single effluent sample is detected for delta-BHC or endrin aldehyde and the result is greater than or equal to the minimum levels listed in Appendix 4 of the SIP, a violation will be flagged and the Discharger will be considered out of compliance for that single sample.

G. Total Residual Chlorine Effluent Limitations (Section IV.A.1.d). Continuous monitoring analyzers for chlorine residual or for dechlorination agent residual in the effluent are appropriate methods for compliance determination. A positive residual dechlorination agent in the effluent indicates that chlorine is not present in the discharge, which demonstrates compliance with the effluent limitations. This type of monitoring can also be used to prove that some chlorine residual exceedances are false positives. Continuous monitoring data showing either a positive dechlorination agent residual or a chlorine residual at or below the prescribed limit are sufficient to show compliance with the total residual chlorine effluent limitations, as long as the instruments are maintained and calibrated in accordance with the manufacturer's recommendations.

Any excursion above the 1-hour average or 4-day average total residual chlorine effluent limitations is a violation. If the Discharger conducts continuous monitoring and the Discharger can demonstrate, through data collected from a back-up monitoring system, that a chlorine spike recorded by the continuous monitor was not actually due to chlorine, then any excursion resulting from the recorded spike will not be considered an exceedance, but rather reported as a false positive. Records supporting validation of false positives shall be maintained in accordance with Section IV Standard Provisions (Attachment D).

Deleted: HYDROSCIENCE OPERATIONS, INC.

H. Chronic Whole Effluent Toxicity Effluent Limitation (Section IV.A.1.e). Compliance with the accelerated monitoring and TRE/TIE provisions of Provision VI.C.2.a shall constitute compliance with effluent limitations IV.A.1.e for chronic whole effluent toxicity.

Deleted: HYDROSCIENCE OPERATIONS INC.

ATTACHMENT A – DEFINITIONS

Arithmetic Mean (μ)

Also called the average, is the sum of measured values divided by the number of samples. For ambient water concentrations, the arithmetic mean is calculated as follows:

Arithmetic mean = $\mu = \Sigma x / n$ where: Σx is the sum of the measured ambient water concentrations, and n is the number of samples.

Average Monthly Effluent Limitation (AMEL)

The highest allowable average of daily discharges over a calendar month, calculated as the sum of all daily discharges measured during a calendar month divided by the number of daily discharges measured during that month.

Average Weekly Effluent Limitation (AWEL)

The highest allowable average of daily discharges over a calendar week (Sunday through Saturday), calculated as the sum of all daily discharges measured during a calendar week divided by the number of daily discharges measured during that week.

Bioaccumulative

Those substances taken up by an organism from its surrounding medium through gill membranes, epithelial tissue, or from food and subsequently concentrated and retained in the body of the organism.

Carcinogenic

Pollutants are substances that are known to cause cancer in living organisms.

Coefficient of Variation (CV)

CV is a measure of the data variability and is calculated as the estimated standard deviation divided by the arithmetic mean of the observed values.

Daily Discharge

Daily Discharge is defined as either: (1) the total mass of the constituent discharged over the calendar day (12:00 am through 11:59 pm) or any 24-hour period that reasonably represents a calendar day for purposes of sampling (as specified in the permit), for a constituent with limitations expressed in units of mass or; (2) the unweighted arithmetic mean measurement of the constituent over the day for a constituent with limitations expressed in other units of measurement (e.g., concentration).

The daily discharge may be determined by the analytical results of a composite sample taken over the course of 1 day (a calendar day or other 24-hour period defined as a day) or by the arithmetic mean of analytical results from one or more grab samples taken over the course of the day.

For composite sampling, if 1 day is defined as a 24-hour period other than a calendar day, the analytical result for the 24-hour period will be considered as the result for the calendar day in which the 24-hour period ends.

Deleted: HYDROSCIENCE OPERATIONS INC.

Detected, but Not Quantified (DNQ)
DNQ are those sample results less than the RL, but greater than or equal to the laboratory's MDL.

Dilution Credit
Dilution Credit is the amount of dilution granted to a discharge in the calculation of a water quality-based effluent limitation, based on the allowance of a specified mixing zone. It is calculated from the dilution ratio or determined through conducting a mixing zone study or modeling of the discharge and receiving water.

Effluent Concentration Allowance (ECA)
ECA is a value derived from the water quality criterion/objective, dilution credit, and ambient background concentration that is used, in conjunction with the coefficient of variation for the effluent monitoring data, to calculate a long-term average (LTA) discharge concentration. The ECA has the same meaning as waste load allocation (WLA) as used in USEPA guidance (Technical Support Document For Water Quality-based Toxics Control, March 1991, second printing, EPA/505/2-90-001).

Enclosed Bays
Enclosed Bays means indentations along the coast that enclose an area of oceanic water within distinct headlands or harbor works. Enclosed bays include all bays where the narrowest distance between the headlands or outermost harbor works is less than 75 percent of the greatest dimension of the enclosed portion of the bay. Enclosed bays include, but are not limited to, Humboldt Bay, Bodega Harbor, Tomales Bay, Drake's Estero, San Francisco Bay, Morro Bay, Los Angeles-Long Beach Harbor, Upper and Lower Newport Bay, Mission Bay, and San Diego Bay. Enclosed bays do not include inland surface waters or ocean waters.

Estimated Chemical Concentration
The estimated chemical concentration that results from the confirmed detection of the substance by the analytical method below the ML value.

Estuaries
Estuaries means waters, including coastal lagoons, located at the mouths of streams that serve as areas of mixing for fresh and ocean waters. Coastal lagoons and mouths of streams that are temporarily separated from the ocean by sandbars shall be considered estuaries. Estuarine waters shall be considered to extend from a bay or the open ocean to a point upstream where there is no significant mixing of fresh water and seawater. Estuarine waters included, but are not limited to, the Sacramento-San Joaquin Delta, as defined in CWC section 12220, Suisun Bay, Carquinez Strait downstream to the Carquinez Bridge, and appropriate areas of the Smith, Mad, Eel, Noyo, Russian, Klamath, San Diego, and Otay rivers. Estuaries do not include inland surface waters or ocean waters.

Inland Surface Waters
All surface waters of the State that do not include the ocean, enclosed bays, or estuaries.

Instantaneous Maximum Effluent Limitation
The highest allowable value for any single grab sample or aliquot (i.e., each grab sample or aliquot is independently compared to the instantaneous maximum limitation).

Deleted: HYDROSCIENCE OPERATIONS INC.

Instantaneous Minimum Effluent Limitation
The lowest allowable value for any single grab sample or aliquot (i.e., each grab sample or aliquot is independently compared to the instantaneous minimum limitation).

Maximum Daily Effluent Limitation (MDEL)
The highest allowable daily discharge of a pollutant, over a calendar day (or 24-hour period). For pollutants with limitations expressed in units of mass, the daily discharge is calculated as the total mass of the pollutant discharged over the day. For pollutants with limitations expressed in other units of measurement, the daily discharge is calculated as the arithmetic mean measurement of the pollutant over the day.

Median
The middle measurement in a set of data. The median of a set of data is found by first arranging the measurements in order of magnitude (either increasing or decreasing order). If the number of measurements (n) is odd, then the median = $X_{(n+1)/2}$. If n is even, then the median = $(X_{n/2} + X_{(n/2)+1})/2$ (i.e., the midpoint between the $n/2$ and $n/2+1$).

Method Detection Limit (MDL)
MDL is the minimum concentration of a substance that can be measured and reported with 99 percent confidence that the analyte concentration is greater than zero, as defined in 40 CFR Part 136, Attachment B, revised as of 3 July 1999.

Minimum Level (ML)
ML is the concentration at which the entire analytical system must give a recognizable signal and acceptable calibration point. The ML is the concentration in a sample that is equivalent to the concentration of the lowest calibration standard analyzed by a specific analytical procedure, assuming that all the method specified sample weights, volumes, and processing steps have been followed.

Mixing Zone
Mixing Zone is a limited volume of receiving water that is allocated for mixing with a wastewater discharge where water quality criteria can be exceeded without causing adverse effects to the overall water body.

Not Detected (ND)
Sample results which are less than the laboratory's MDL.

Ocean Waters
The territorial marine waters of the State as defined by California law to the extent these waters are outside of enclosed bays, estuaries, and coastal lagoons. Discharges to ocean waters are regulated in accordance with the State Water Board's California Ocean Plan.

Persistent Pollutants
Persistent pollutants are substances for which degradation or decomposition in the environment is nonexistent or very slow.

Deleted: HYDROSCIENCE OPERATIONS INC.

Pollutant Minimization Program (PMP)
PMP means waste minimization and pollution prevention actions that include, but are not limited to, product substitution, waste stream recycling, alternative waste management methods, and education of the public and businesses. The goal of the PMP shall be to reduce all potential sources of a priority pollutant(s) through pollutant minimization (control) strategies, including pollution prevention measures as appropriate, to maintain the effluent concentration at or below the water quality-based effluent limitation. Pollution prevention measures may be particularly appropriate for persistent bioaccumulative priority pollutants where there is evidence that beneficial uses are being impacted. The Regional Water Board may consider cost effectiveness when establishing the requirements of a PMP. The completion and implementation of a Pollution Prevention Plan, if required pursuant to CWC section 13263.3(d), shall be considered to fulfill the PMP requirements.

Pollution Prevention
Pollution Prevention means any action that causes a net reduction in the use or generation of a hazardous substance or other pollutant that is discharged into water and includes, but is not limited to, input change, operational improvement, production process change, and product reformulation (as defined in Water Code section 13263.3). Pollution prevention does not include actions that merely shift a pollutant in wastewater from one environmental medium to another environmental medium, unless clear environmental benefits of such an approach are identified to the satisfaction of the State or Regional Water Board.

Reporting Level (RL)
RL is the ML (and its associated analytical method) chosen by the Discharger for reporting and compliance determination from the MLs included in this Order. The MLs included in this Order correspond to approved analytical methods for reporting a sample result that are selected by the Regional Water Board either from Appendix 4 of the SIP in accordance with section 2.4.2 of the SIP or established in accordance with section 2.4.3 of the SIP. The ML is based on the proper application of method-based analytical procedures for sample preparation and the absence of any matrix interferences. Other factors may be applied to the ML depending on the specific sample preparation steps employed. For example, the treatment typically applied in cases where there are matrix-effects is to dilute the sample or sample aliquot by a factor of ten. In such cases, this additional factor must be applied to the ML in the computation of the RL.

Satellite Collection System
The portion, if any, of a sanitary sewer system owned or operated by a different public agency than the agency that owns and operates the wastewater treatment facility that a sanitary sewer system is tributary to.

Source of Drinking Water
Any water designated as municipal or domestic supply (MUN) in a Regional Water Board Basin Plan.

Deleted: HYDROSCIENCE OPERATIONS INC.

Standard Deviation (σ)
Standard Deviation is a measure of variability that is calculated as follows:

$$\sigma = (\sum[(x - \mu)^2]/(n - 1))^{0.5}$$

where:
x is the observed value;
μ is the arithmetic mean of the observed values; and
n is the number of samples.

Toxicity Reduction Evaluation (TRE)
TRE is a study conducted in a step-wise process designed to identify the causative agents of effluent or ambient toxicity, isolate the sources of toxicity, evaluate the effectiveness of toxicity control options, and then confirm the reduction in toxicity. The first steps of the TRE consist of the collection of data relevant to the toxicity, including additional toxicity testing, and an evaluation of facility operations and maintenance practices, and best management practices. A Toxicity Identification Evaluation (TIE) may be required as part of the TRE, if appropriate. (A TIE is a set of procedures to identify the specific chemical(s) responsible for toxicity. These procedures are performed in three phases (characterization, identification, and confirmation) using aquatic organism toxicity tests.)

Deleted: HYDROSCIENCE OPERATIONS, INC.

ATTACHMENT B – MAP

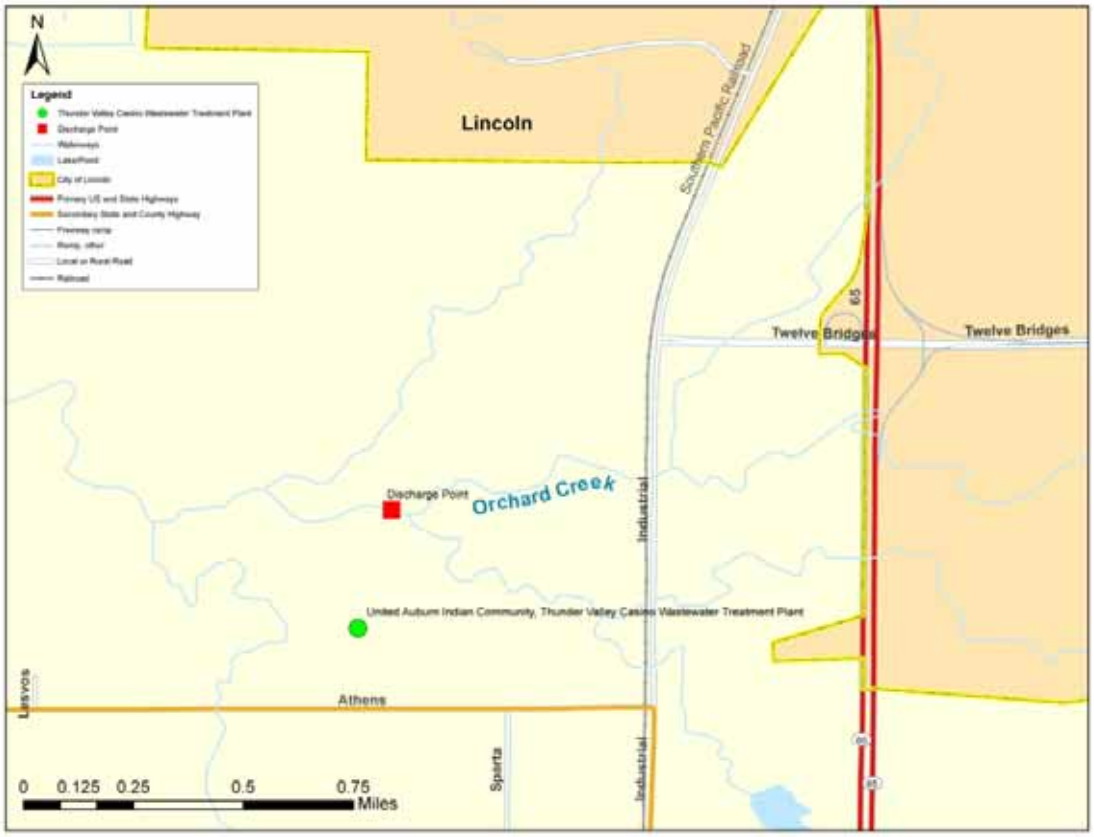

SITE LOCATION MAP

United Auburn Indian Community
Thunder Valley Casino Wastewater Treatment Plant
Placer County

Deleted: HYDROSCIENCE OPERATIONS, INC.

ATTACHMENT C – FLOW SCHEMATIC

Formatted: Body Text,bt,BT

Figure C-1. Flow Schematic – First Phase of Expansion (0.7 MGD)

Formatted: Font: Bold

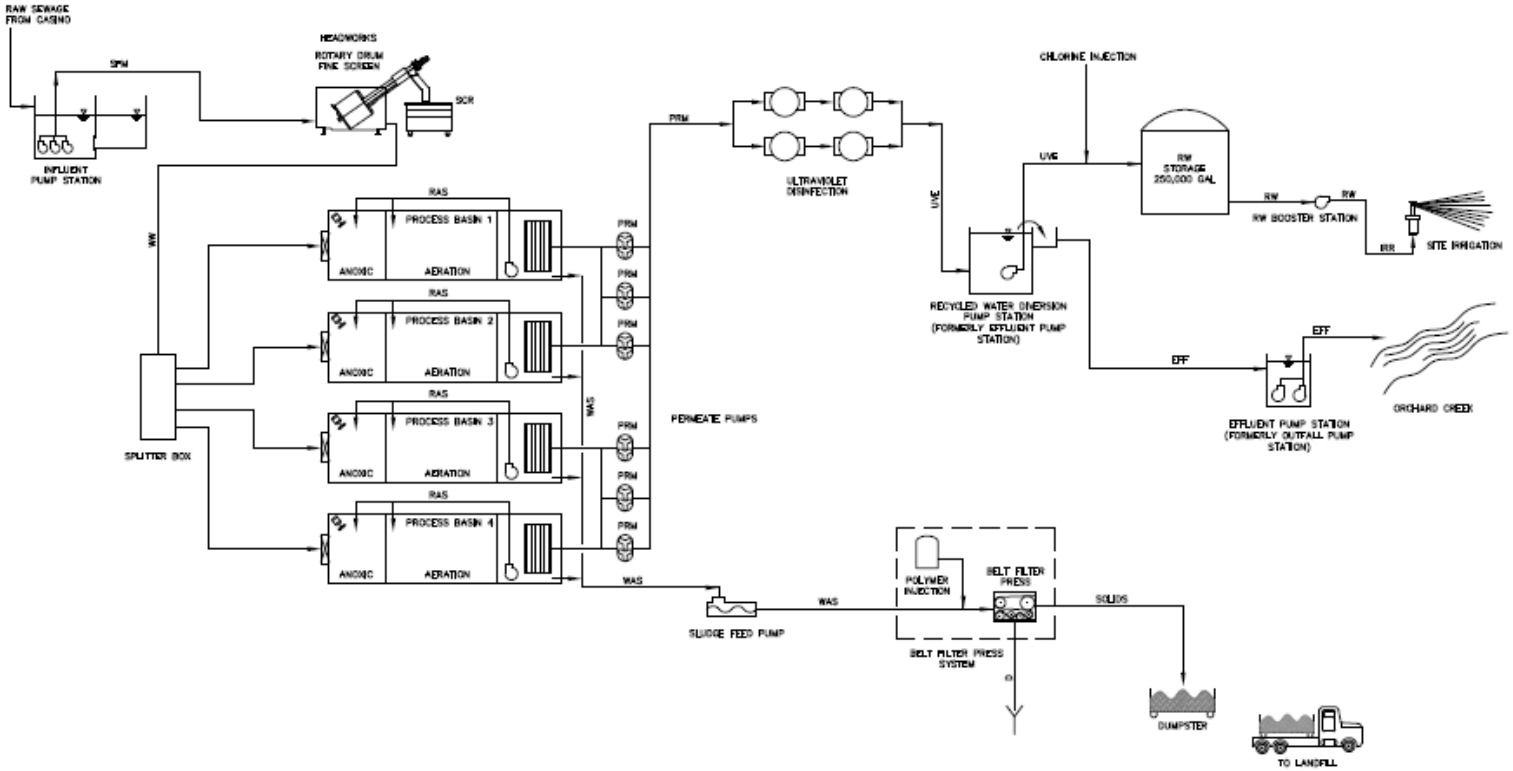

Deleted: HYDROSCIENCE OPERATIONS, INC.

Formatted: Normal Attachments, Centered

Figure C-1. Flow Schematic – Second Phase of Expansion (0.875 MGD)

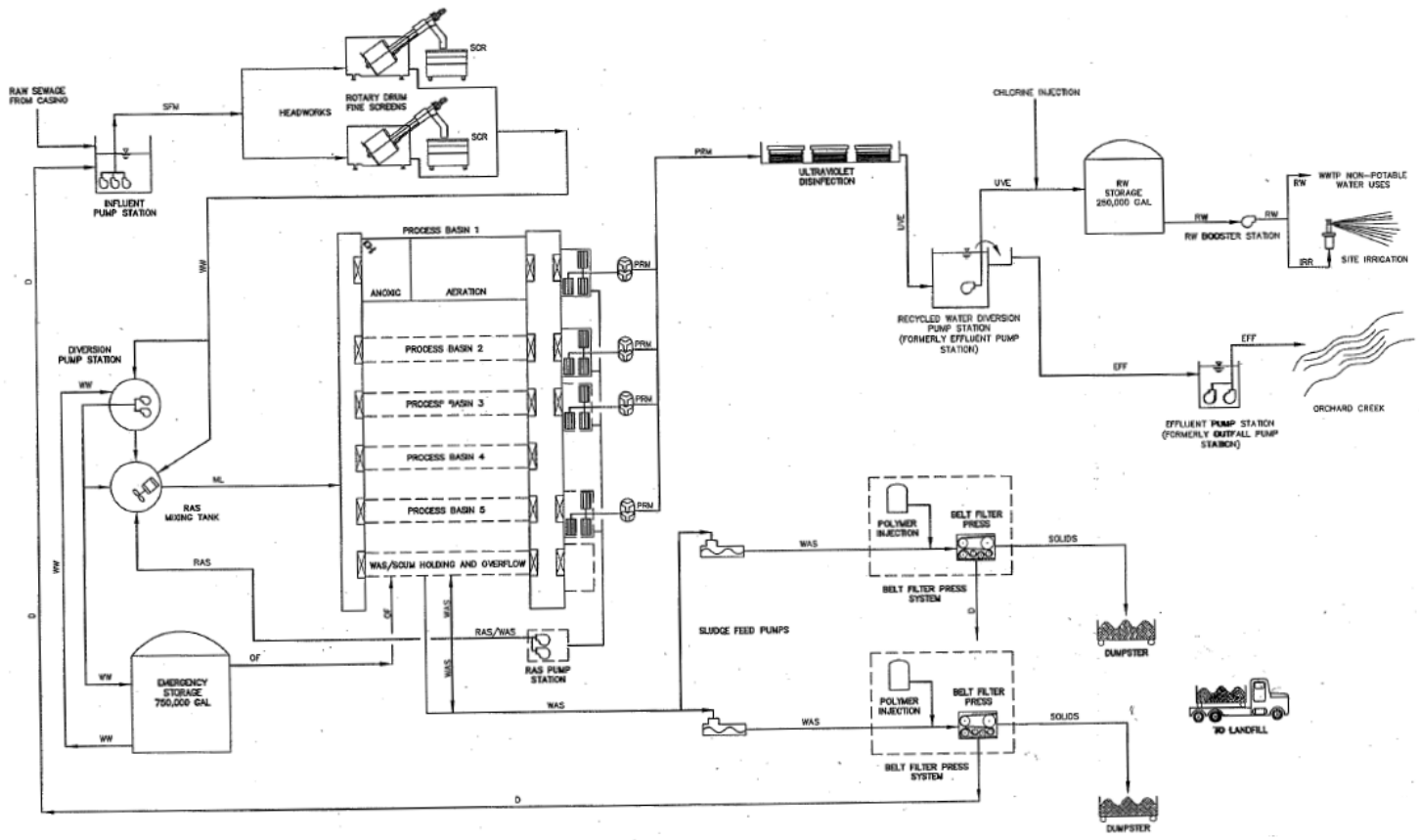

Deleted: HYDROSCIENCE OPERATIONS, INC.

ATTACHMENT D – STANDARD PROVISIONS

VIII. STANDARD PROVISIONS – PERMIT COMPLIANCE

A. Duty to Comply

1. The Discharger must comply with all of the conditions of this Order. Any noncompliance constitutes a violation of the Clean Water Act (CWA) and the California Water Code (CWC) and is grounds for enforcement action, for permit termination, revocation and reissuance, or modification; or denial of a permit renewal application. (40 CFR 122.41(a).)

2. The Discharger shall comply with effluent standards or prohibitions established under section 307(a) of the CWA for toxic pollutants and with standards for sewage sludge use or disposal established under section 405(d) of the CWA within the time provided in the regulations that establish these standards or prohibitions, even if this Order has not yet been modified to incorporate the requirement. (40 CFR 122.41(a)(1).)

B. Need to Halt or Reduce Activity Not a Defense

It shall not be a defense for a Discharger in an enforcement action that it would have been necessary to halt or reduce the permitted activity in order to maintain compliance with the conditions of this Order. (40 CFR 122.41(c).)

C. Duty to Mitigate

The Discharger shall take all reasonable steps to minimize or prevent any discharge or sludge use or disposal in violation of this Order that has a reasonable likelihood of adversely affecting human health or the environment. (40 CFR 122.41(d).)

D. Proper Operation and Maintenance

The Discharger shall at all times properly operate and maintain all facilities and systems of treatment and control (and related appurtenances) which are installed or used by the Discharger to achieve compliance with the conditions of this Order. Proper operation and maintenance also includes adequate laboratory controls and appropriate quality assurance procedures. This provision requires the operation of backup or auxiliary facilities or similar systems that are installed by a Discharger only when necessary to achieve compliance with the conditions of this Order. (40 CFR 122.41(e).)

E. Property Rights

1. This Order does not convey any property rights of any sort or any exclusive privileges. (40 CFR 122.41(g).)

Deleted: HYDROSCIENCE OPERATIONS, INC.

2. The issuance of this Order does not authorize any injury to persons or property or invasion of other private rights, or any infringement of state or local law or regulations. (40 CFR 122.5(c).)

F. Inspection and Entry

The Discharger shall allow the Regional Water Board, State Water Board, United States Environmental Protection Agency (USEPA), and/or their authorized representatives (including an authorized contractor acting as their representative), upon the presentation of credentials and other documents, as may be required by law, to (40 CFR 122.41(i); CWC section 13383):

1. Enter upon the Discharger's premises where a regulated facility or activity is located or conducted, or where records are kept under the conditions of this Order (40 CFR 122.41(i)(1));

2. Have access to and copy, at reasonable times, any records that must be kept under the conditions of this Order (40 CFR 122.41(i)(2));

3. Inspect and photograph, at reasonable times, any facilities, equipment (including monitoring and control equipment), practices, or operations regulated or required under this Order (40 CFR 122.41(i)(3)); and

4. Sample or monitor, at reasonable times, for the purposes of assuring Order compliance or as otherwise authorized by the CWA or the CWC, any substances or parameters at any location. (40 CFR 122.41(i)(4).)

G. Bypass

1. Definitions

   a. "Bypass" means the intentional diversion of waste streams from any portion of a treatment facility. (40 CFR 122.41(m)(1)(i).)

   b. "Severe property damage" means substantial physical damage to property, damage to the treatment facilities, which causes them to become inoperable, or substantial and permanent loss of natural resources that can reasonably be expected to occur in the absence of a bypass. Severe property damage does not mean economic loss caused by delays in production. (40 CFR 122.41(m)(1)(ii).)

2. Bypass not exceeding limitations. The Discharger may allow any bypass to occur which does not cause exceedances of effluent limitations, but only if it is for essential maintenance to assure efficient operation. These bypasses are not subject to the provisions listed in Standard Provisions – Permit Compliance I.G.3, I.G.4, and I.G.5 below. (40 CFR 122.41(m)(2).)

Deleted: HYDROSCIENCE OPERATIONS, INC.

3. Prohibition of bypass. Bypass is prohibited, and the Regional Water Board may take enforcement action against a Discharger for bypass, unless (40 CFR 122.41(m)(4)(i)):

   a. Bypass was unavoidable to prevent loss of life, personal injury, or severe property damage (40 CFR 122.41(m)(4)(i)(A));

   b. There were no feasible alternatives to the bypass, such as the use of auxiliary treatment facilities, retention of untreated wastes, or maintenance during normal periods of equipment downtime. This condition is not satisfied if adequate back-up equipment should have been installed in the exercise of reasonable engineering judgment to prevent a bypass that occurred during normal periods of equipment downtime or preventive maintenance (40 CFR 122.41(m)(4)(i)(B)); and

   c. The Discharger submitted notice to the Regional Water Board as required under Standard Provisions – Permit Compliance I.G.5 below. (40 CFR 122.41(m)(4)(i)(C).)

4. The Regional Water Board may approve an anticipated bypass, after considering its adverse effects, if the Regional Water Board determines that it will meet the three conditions listed in Standard Provisions – Permit Compliance I.G.3 above. (40 CFR 122.41(m)(4)(ii).)

5. Notice

   a. Anticipated bypass. If the Discharger knows in advance of the need for a bypass, it shall submit a notice, if possible at least 10 days before the date of the bypass. (40 CFR 122.41(m)(3)(i).)

   b. Unanticipated bypass. The Discharger shall submit notice of an unanticipated bypass as required in Standard Provisions - Reporting V.E below (24-hour notice). (40 CFR 122.41(m)(3)(ii).)

H. Upset

Upset means an exceptional incident in which there is unintentional and temporary noncompliance with technology based permit effluent limitations because of factors beyond the reasonable control of the Discharger. An upset does not include noncompliance to the extent caused by operational error, improperly designed treatment facilities, inadequate treatment facilities, lack of preventive maintenance, or careless or improper operation. (40 CFR 122.41(n)(1).)

1. Effect of an upset. An upset constitutes an affirmative defense to an action brought for noncompliance with such technology based permit effluent limitations if the requirements of Standard Provisions – Permit Compliance I.H.2 below are met. No determination made during administrative review of claims that noncompliance was

Deleted: HYDROSCIENCE OPERATIONS, INC.

caused by upset, and before an action for noncompliance, is final administrative action subject to judicial review. (40 CFR 122.41(n)(2).)

2. Conditions necessary for a demonstration of upset. A Discharger who wishes to establish the affirmative defense of upset shall demonstrate, through properly signed, contemporaneous operating logs or other relevant evidence that (40 CFR 122.41(n)(3)):

a. An upset occurred and that the Discharger can identify the cause(s) of the upset (40 CFR 122.41(n)(3)(i));

b. The permitted facility was, at the time, being properly operated (40 CFR 122.41(n)(3)(ii));

c. The Discharger submitted notice of the upset as required in Standard Provisions – Reporting V.E.2.b below (24-hour notice) (40 CFR 122.41(n)(3)(iii)); and

d. The Discharger complied with any remedial measures required under Standard Provisions – Permit Compliance I.C above. (40 CFR 122.41(n)(3)(iv).)

3. Burden of proof. In any enforcement proceeding, the Discharger seeking to establish the occurrence of an upset has the burden of proof. (40 CFR 122.41(n)(4).)

IX. STANDARD PROVISIONS – PERMIT ACTION

A. General

This Order may be modified, revoked and reissued, or terminated for cause. The filing of a request by the Discharger for modification, revocation and reissuance, or termination, or a notification of planned changes or anticipated noncompliance does not stay any Order condition. (40 CFR 122.41(f).)

B. Duty to Reapply

If the Discharger wishes to continue an activity regulated by this Order after the expiration date of this Order, the Discharger must apply for and obtain a new permit. (40 CFR 122.41(b).)

C. Transfers

This Order is not transferable to any person except after notice to the Regional Water Board. The Regional Water Board may require modification or revocation and reissuance of the Order to change the name of the Discharger and incorporate such other requirements as may be necessary under the CWA and the CWC. (40 CFR 122.41(l)(3) and 122.61.)

Deleted: HYDROSCIENCE OPERATIONS, INC.

X. STANDARD PROVISIONS – MONITORING

A. Samples and measurements taken for the purpose of monitoring shall be representative of the monitored activity. (40 CFR 122.41(j)(1).)

B. Monitoring results must be conducted according to test procedures under 40 CFR Part 136 or, in the case of sludge use or disposal, approved under 40 CFR Part 136 unless otherwise specified in 40 CFR Part 503 unless other test procedures have been specified in this Order. (40 CFR 122.41(j)(4) and 122.44(i)(1)(iv).)

XI. STANDARD PROVISIONS – RECORDS

A. Except for records of monitoring information required by this Order related to the Discharger's sewage sludge use and disposal activities, which shall be retained for a period of at least 5 years (or longer as required by 40 CFR Part 503), the Discharger shall retain records of all monitoring information, including all calibration and maintenance records and all original strip chart recordings for continuous monitoring instrumentation, copies of all reports required by this Order, and records of all data used to complete the application for this Order, for a period of at least three (3) years from the date of the sample, measurement, report or application. This period may be extended by request of the Regional Water Board Executive Officer at any time. (40 CFR 122.41(j)(2).)

B. Records of monitoring information shall include:

1. The date, exact place, and time of sampling or measurements (40 CFR 122.41(j)(3)(i));

2. The individual(s) who performed the sampling or measurements (40 CFR 122.41(j)(3)(ii));

3. The date(s) analyses were performed (40 CFR 122.41(j)(3)(iii));

4. The individual(s) who performed the analyses (40 CFR 122.41(j)(3)(iv));

5. The analytical techniques or methods used (40 CFR 122.41(j)(3)(v)); and

6. The results of such analyses. (40 CFR 122.41(j)(3)(vi).)

C. Claims of confidentiality for the following information will be denied (40 CFR 122.7(b)):

1. The name and address of any permit applicant or Discharger (40 CFR 122.7(b)(1)); and

2. Permit applications and attachments, permits and effluent data. (40 CFR 122.7(b)(2).)

Deleted: HYDROSCIENCE OPERATIONS, INC.

XII. STANDARD PROVISIONS – REPORTING

A. Duty to Provide Information

The Discharger shall furnish to the Regional Water Board, State Water Board, or USEPA within a reasonable time, any information which the Regional Water Board, State Water Board, or USEPA may request to determine whether cause exists for modifying, revoking and reissuing, or terminating this Order or to determine compliance with this Order. Upon request, the Discharger shall also furnish to the Regional Water Board, State Water Board, or USEPA copies of records required to be kept by this Order. (40 CFR 122.41(h); Wat. Code, § 13267.)

B. Signatory and Certification Requirements

1. All applications, reports, or information submitted to the Regional Water Board, State Water Board, and/or USEPA shall be signed and certified in accordance with Standard Provisions – Reporting V.B.2, V.B.3, V.B.4, and V.B.5 below. (40 CFR 122.41(k).)

2. All permit applications shall be signed by either a principal executive officer or ranking elected official. For purposes of this provision, a principal executive officer of a federal agency includes: (i) the chief executive officer of the agency, or (ii) a senior executive officer having responsibility for the overall operations of a principal geographic unit of the agency (e.g., Regional Administrators of USEPA). (40 CFR 122.22(a)(3).).

3. All reports required by this Order and other information requested by the Regional Water Board, State Water Board, or USEPA shall be signed by a person described in Standard Provisions – Reporting V.B.2 above, or by a duly authorized representative of that person. A person is a duly authorized representative only if:

   a. The authorization is made in writing by a person described in Standard Provisions – Reporting V.B.2 above (40 CFR 122.22(b)(1));

   b. The authorization specifies either an individual or a position having responsibility for the overall operation of the regulated facility or activity such as the position of plant manager, operator of a well or a well field, superintendent, position of equivalent responsibility, or an individual or position having overall responsibility for environmental matters for the company. (A duly authorized representative may thus be either a named individual or any individual occupying a named position.) (40 CFR 122.22(b)(2)); and

   c. The written authorization is submitted to the Regional Water Board and State Water Board. (40 CFR 122.22(b)(3).)

4. If an authorization under Standard Provisions – Reporting V.B.3 above is no longer accurate because a different individual or position has responsibility for the overall operation of the facility, a new authorization satisfying the requirements of Standard

Deleted: HYDROSCIENCE OPERATIONS, INC.

Provisions – Reporting V.B.3 above must be submitted to the Regional Water Board and State Water Board prior to or together with any reports, information, or applications, to be signed by an authorized representative. (40 CFR 122.22(c).)

5. Any person signing a document under Standard Provisions – Reporting V.B.2 or V.B.3 above shall make the following certification:

   "*I certify under penalty of law that this document and all attachments were prepared under my direction or supervision in accordance with a system designed to assure that qualified personnel properly gather and evaluate the information submitted. Based on my inquiry of the person or persons who manage the system or those persons directly responsible for gathering the information, the information submitted is, to the best of my knowledge and belief, true, accurate, and complete. I am aware that there are significant penalties for submitting false information, including the possibility of fine and imprisonment for knowing violations.*" (40 CFR 122.22(d).)

C. Monitoring Reports

1. Monitoring results shall be reported at the intervals specified in the Monitoring and Reporting Program (Attachment E) in this Order. (40 CFR 122.22(l)(4).)

2. Monitoring results must be reported on a Discharge Monitoring Report (DMR) form or forms provided or specified by the Regional Water Board or State Water Board for reporting results of monitoring of sludge use or disposal practices. (40 CFR 122.41(l)(4)(i).)

3. If the Discharger monitors any pollutant more frequently than required by this Order using test procedures approved under 40 CFR Part 136 or, in the case of sludge use or disposal, approved under 40 CFR Part 136 unless otherwise specified in 40 CFR Part 503, or as specified in this Order, the results of this monitoring shall be included in the calculation and reporting of the data submitted in the DMR or sludge reporting form specified by the Regional Water Board. (40 CFR 122.41(l)(4)(ii).)

4. Calculations for all limitations, which require averaging of measurements, shall utilize an arithmetic mean unless otherwise specified in this Order. (40 CFR 122.41(l)(4)(iii).)

D. Compliance Schedules

Reports of compliance or noncompliance with, or any progress reports on, interim and final requirements contained in any compliance schedule of this Order, shall be submitted no later than 14 days following each schedule date. (40 CFR 122.41(l)(5).)

E. Two-Hour and Twenty-Four Hour Reporting

1. The Discharger shall notify the Office of Emergency Services any noncompliance that may endanger health or the environment within 2-hours from the time the Discharger becomes aware of the circumstances. Any information shall be provided

Deleted: HYDROSCIENCE OPERATIONS, INC.

by telephone or fax within 24 hours from the time the Discharger becomes aware of the circumstances. A written submission shall also be provided within five (5) days of the time the Discharger becomes aware of the circumstances. The written submission shall contain a description of the noncompliance and its cause; the period of noncompliance, including exact dates and times, and if the noncompliance has not been corrected, the anticipated time it is expected to continue; and steps taken or planned to reduce, eliminate, and prevent reoccurrence of the noncompliance. (40 CFR 122.41(l)(6)(i).)

2. The following shall be included as information that must be reported within 24 hours under this paragraph (40 CFR 122.41(l)(6)(ii)):

a. Any unanticipated bypass that exceeds any effluent limitation in this Order. (40 CFR 122.41(l)(6)(ii)(A).)

b. Any upset that exceeds any effluent limitation in this Order. (40 CFR 122.41(l)(6)(ii)(B).)

3. The Regional Water Board may waive the above-required written report under this provision on a case-by-case basis if an oral report has been received within 24 hours. (40 CFR 122.41(l)(6)(iii).)

F. Planned Changes

The Discharger shall give notice to the Regional Water Board as soon as possible of any planned physical alterations or additions to the permitted facility. Notice is required under this provision only when (40 CFR 122.41(l)(1)):

1. The alteration or addition to a permitted facility may meet one of the criteria for determining whether a facility is a new source in 40 CFR 122.29(b) (40 CFR 122.41(l)(1)(i)); or

2. The alteration or addition could significantly change the nature or increase the quantity of pollutants discharged. This notification applies to pollutants that are not subject to effluent limitations in this Order. (40 CFR 122.41(l)(1)(ii).)

3. The alteration or addition results in a significant change in the Discharger's sludge use or disposal practices, and such alteration, addition, or change may justify the application of permit conditions that are different from or absent in the existing permit, including notification of additional use or disposal sites not reported during the permit application process or not reported pursuant to an approved land application plan. (40 CFR 122.41(l)(1)(iii).)

G. Anticipated Noncompliance

The Discharger shall give advance notice to the Regional Water Board or State Water Board of any planned changes in the permitted facility or activity that may result in noncompliance with General Order requirements. (40 CFR 122.41(l)(2).)

Deleted: HYDROSCIENCE OPERATIONS, INC.

H. Other Noncompliance

The Discharger shall report all instances of noncompliance not reported under Standard Provisions – Reporting V.C, V.D, and V.E above at the time monitoring reports are submitted. The reports shall contain the information listed in Standard Provision – Reporting V.E above. (40 CFR 122.41(l)(7).)

I. Other Information

When the Discharger becomes aware that it failed to submit any relevant facts in a permit application, or submitted incorrect information in a permit application or in any report to the Regional Water Board, State Water Board, or USEPA, the Discharger shall promptly submit such facts or information. (40 CFR 122.41(l)(8).)

XIII. STANDARD PROVISIONS – ENFORCEMENT

A. The Regional Water Board is authorized to enforce the terms of this permit under several provisions of the CWC, including, but not limited to, sections 13385, 13386, and 13387

XIV. ADDITIONAL PROVISIONS – NOTIFICATION LEVELS

A. Publicly-Owned Treatment Works (POTWs)

All POTWs shall provide adequate notice to the Regional Water Board of the following (40 CFR 122.42(b)):

1. Any new introduction of pollutants into the POTW from an indirect discharger that would be subject to sections 301 or 306 of the CWA if it were directly discharging those pollutants (40 CFR 122.42(b)(1)); and

2. Any substantial change in the volume or character of pollutants being introduced into that POTW by a source introducing pollutants into the POTW at the time of adoption of the Order. (40 CFR 122.42(b)(2).)

3. Adequate notice shall include information on the quality and quantity of effluent introduced into the POTW as well as any anticipated impact of the change on the quantity or quality of effluent to be discharged from the POTW. (40 CFR 122.42(b)(3).)

Deleted: HYDROSCIENCE OPERATIONS, INC.

ATTACHMENT E – MONITORING AND REPORTING PROGRAM

Table of Contents

I. General Monitoring Provisions E-2
II. Monitoring Locations E-4
III. Influent Monitoring Requirements E-4
  A. Monitoring Location INF-001 ..... E-4
IV. Effluent Monitoring Requirements E-4
  A. Monitoring Location EFF-001 ..... E-4
V. Whole Effluent Toxicity Testing Requirements E-6
VI. Land Discharge Monitoring Requirements – Not Applicable E-9
VII. Reclamation Monitoring Requirements E-9
VIII. Receiving Water Monitoring Requirements – Surface Water E-10
  A. Monitoring Locations RSW-001 and RSW-002 ..... E-10
IX. Other Monitoring Requirements E-11
  A. Biosolids E-11
  B. Municipal Water Supply E-11
  C. Ultraviolet Disinfection System E-12
X. Reporting Requirements E-12
  A. General Monitoring and Reporting Requirements E-12
  B. Self Monitoring Reports (SMRs) E-13
  C. Discharge Monitoring Reports (DMRs) – Not Applicable E-16
  D. Other Reports E-16

List of Tables

Table E-1. Monitoring Station Locations E-4
Table E-2. Influent Monitoring E-4
Table E-3. Effluent Monitoring E-5
Table E-4. Chronic Toxicity Testing Dilution Series E-8
Table E-5. Reclamation Monitoring Requirements E-9
Table E-6. Receiving Water Monitoring Requirements E-10
Table E-7. Municipal Water Supply Monitoring Requirements E-12
Table E-8. Ultraviolet Disinfection System Monitoring Requirements E-12
Table E-9. Monitoring Periods and Reporting Schedule E-13

Deleted: HYDROSCIENCE OPERATIONS, INC.

ATTACHMENT E – MONITORING AND REPORTING PROGRAM

Title 40 of the Code of Federal Regulations (CFR), section 122.48 (40 CFR 122.48) requires that all NPDES permits specify monitoring and reporting requirements. California Water Code (CWC) sections 13267 and 13383 also authorize the Regional Water Quality Control Board (Regional Water Board) to require technical and monitoring reports. This Monitoring and Reporting Program establishes monitoring and reporting requirements, which implement the federal and California regulations.

I. GENERAL MONITORING PROVISIONS

A. Samples and measurements taken as required herein shall be representative of the volume and nature of the monitored discharge. All samples shall be taken at the monitoring locations specified below and, unless otherwise specified, before the monitored flow joins or is diluted by any other waste stream, body of water, or substance. Monitoring locations shall not be changed without notification to and the approval of this Regional Water Board.

B. Effluent samples shall be taken downstream of the last addition of wastes to the treatment or discharge works where a representative sample may be obtained prior to mixing with the receiving waters. Samples shall be collected at such a point and in such a manner to ensure a representative sample of the discharge.

C. Chemical, bacteriological, and bioassay analyses shall be conducted at a laboratory certified for such analyses by the Department of Public Health (DPH; formerly the Department of Health Services). In the event a certified laboratory is not available to the Discharger, analyses performed by a noncertified laboratory will be accepted provided a Quality Assurance-Quality Control Program is instituted by the laboratory. A manual containing the steps followed in this program must be kept in the laboratory and shall be available for inspection by Regional Water Board staff. The Quality Assurance-Quality Control Program must conform to USEPA guidelines or to procedures approved by the Regional Water Board.

D. All analyses shall be performed in a laboratory certified to perform such analyses by DPH. Laboratories that perform sample analyses must be identified in all monitoring reports submitted to the Regional Water Board.

E. Appropriate flow measurement devices and methods consistent with accepted scientific practices shall be selected and used to ensure the accuracy and reliability of measurements of the volume of monitored discharges. All monitoring instruments and devices used by the Discharger to fulfill the prescribed monitoring program shall be properly maintained and calibrated as necessary, at least yearly, to ensure their continued accuracy. All flow measurement devices shall be calibrated at least once per year to ensure continued accuracy of the devices.

F. Monitoring results, including noncompliance, shall be reported at intervals and in a manner specified in this Monitoring and Reporting Program.

Deleted: HYDROSCIENCE OPERATIONS, INC.

G. Laboratories analyzing monitoring samples shall be certified by DPH, in accordance with the provision of CWC section 13176, and must include quality assurance/quality control data with their reports.

H. The Discharger shall conduct analysis on any sample provided by USEPA as part of the Discharge Monitoring Quality Assurance (DMQA) program. The results of any such analysis shall be submitted to USEPA's DMQA manager.

I. The Discharger shall file with the Regional Water Board technical reports on self-monitoring performed according to the detailed specifications contained in this Monitoring and Reporting Program.

J. The results of all monitoring required by this Order shall be reported to the Regional Water Board, and shall be submitted in such a format as to allow direct comparison with the limitations and requirements of this Order. Unless otherwise specified, discharge flows shall be reported in terms of the monthly average and the daily maximum discharge flows.

Deleted: HYDROSCIENCE OPERATIONS, INC.

II. MONITORING LOCATIONS

The Discharger shall establish the following monitoring locations to demonstrate compliance with the effluent limitations, discharge specifications, and other requirements in this Order:

Table E-1. Monitoring Station Locations

Discharge Point Name	Monitoring Location Name	Monitoring Location Description
--	INF-001	A location where a representative sample of the influent into the Facility can be collected.
001	EFF-001	Downstream from the last connection through which wastes can be admitted into the outfall.
--	RSW-001	50 feet upstream from the point of discharge Orchard Creek.
--	RSW-002	200 feet downstream from the point of discharge in Orchard Creek.
--	REC-001	A location where a representative sample of the reclaimed water used for landscape irrigation purposes can be collected.
--	BIO-001	A location where a representative sample of biosolids can be obtained.
--	SPL-001	A location where a representative sample of the municipal water supply can be obtained.
--	UVS-001	Ultraviolet disinfection system.

III. INFLUENT MONITORING REQUIREMENTS

A. Monitoring Location INF-001

1. The Discharger shall monitor the influent to the Facility at INF-001 as follows:

Table E-2. Influent Monitoring

Parameter	Units	Sample Type	Minimum Sampling Frequency	Required Analytical Test Method
Flow	MGD	Meter	Continuous	--
Conventional Pollutants				
Biochemical Oxygen Demand (5-day @ 20°C)	mg/L	24-Hour Composite[1]	1/Day	[2]
Total Suspended Solids	mg/L	24-Hour Composite[1]	1/Day	[2]

[1] 24-hour flow proportioned composite.
[2] Pollutants shall be analyzed using the analytical methods described in 40 CFR Part 136.

IV. EFFLUENT MONITORING REQUIREMENTS

A. Monitoring Location EFF-001

1. The Discharger shall monitor the tertiary treated effluent at EFF-001 as follows. If more than one analytical test method is listed for a given parameter, the Discharger must select from the listed methods and corresponding Minimum Level:

Deleted: HYDROSCIENCE OPERATIONS, INC.

Table E-3. Effluent Monitoring

Parameter	Units	Sample Type[1]	Minimum Sampling Frequency[2]	Required Analytical Test Method
Flow	MGD	Meter	Continuous	--
Conventional Pollutants				
Biochemical Oxygen Demand (5-day @ 20°C)	mg/L	24-Hour Composite[3]	1/Day	[4]
	lbs/day	Calculate	1/Day	[4]
pH	standard units	Meter	1/Day	[4]
Total Suspended Solids	mg/L	24-Hour Composite[3]	1/Day	[4]
	lbs/day	Calculate	1/Day	[4]
Priority Pollutants				
Cadmium, Total Recoverable	µg/L	Grab	1/Month	[4,5]
Delta-BHC	µg/L	Grab	1/Month	[4,5]
Endrin Aldehyde	µg/L	Grab	1/Month	[4,5]
Lead, Total Recoverable	µg/L	Grab	1/Month	[4,5]
Mercury, Total Recoverable	µg/L	Grab	1/Month	[4,5,6]
Zinc, Total Recoverable	µg/L	Grab	1/Month	[4,5]
Priority Pollutants and Other Constituents of Concern[7]	µg/L	24-Hour Composite[8]	[9]	[4,5,10]
Non-Conventional Pollutants				
Aluminum, Total Recoverable	µg/L	24-Hour Composite	1/Month	[4,11]
Ammonia Nitrogen, Total (as N)	mg/L	Grab	1/Day[12,13]	[4]
	lbs/day	Calculate	1/Day	[4]
Chlorine, Total Residual	mg/L	Meter	Continuous[14]	[4]
Electrical Conductivity @ 25°C	µmhos/cm	Grab	3/Week	[4]
Hardness (as $CaCO_3$)	mg/L	Grab	1/Month	[4]
Iron, Total Recoverable	µg/L	Grab	1/Month	[4]
Manganese, Total Recoverable	µg/L	Grab	1/Month	[4]
Temperature	°C	Grab	1/Day	[4]
Total Coliform Organisms	MPN/100 mL	Grab	1/Day	[4]
Total Dissolved Solids	mg/L	24-Hour Composite[3]	1/Month	[4]

Deleted: HYDROSCIENCE OPERATIONS, INC.

Parameter	Units	Sample Type[1]	Minimum Sampling Frequency[2]	Required Analytical Test Method

[1] Samples collected from the outlet structure of the ponds will be considered adequately composited.
[2] If the discharge is intermittent rather than continuous, then on the first day of each such intermittent discharge, the Discharger shall monitor and record for all of the constituents listed above, after which the frequencies of analysis given above shall apply for the duration of each such intermittent discharge. In no event shall the Discharger be required to monitor and record data more often than twice the frequencies listed above.
[3] 24-hour flow proportioned composite.
[4] Pollutants shall be analyzed using the analytical methods described in 40 CFR Part 136.
[5] For priority pollutant constituents with effluent limitations, detection limits shall be below the effluent limitations. If the lowest minimum level (ML) published in Appendix 4 of the Policy for Implementation of Toxics Standards for Inland Surface Waters, Enclosed Bays, and Estuaries of California (State Implementation Plan or SIP) is not below the effluent limitation, the detection limit shall be the lowest ML. For priority pollutant constituents without effluent limitations, the detection limits shall be equal to or less than the lowest ML published in Appendix 4 of the SIP.
[6] Unfiltered methylmercury and total mercury samples shall be taken using clean hands/dirty hands procedures, as described in USEPA Method 1669: Sampling Ambient Water for Trace Metals at EPA Water Quality Levels, for collection of equipment blanks (section 9.4.4.2), and shall be analyzed by USEPA Method 1630/1631 (Revision E) with a method detection limit of 0.02 ng/L for methylmercury and 0.2 ng/L for total mercury.
[7] See List of Priority Pollutants and Other Pollutants of Concern in Attachment I.
[8] Volatile constituents shall be sampled in accordance with 40 CFR Part 136.
[9] Priority pollutants and other constituents of concern shall be sampled quarterly during the third year following the date of permit adoption and shall be conducted concurrently with upstream receiving water monitoring for priority pollutants, hardness (as $CaCO_3$), and pH. The Discharger is not required to conduct effluent monitoring for priority pollutants that have already been sampled in a given quarter, as required in Table E-3. See Attachment I for more detailed requirements related to performing the priority pollutant monitoring.
[10] In order to verify if bis (2-ethylhexyl) phthalate is truly present in the effluent discharge, the Discharger shall take steps to assure that sample containers, sampling apparatus, and analytical equipment are not sources of the detected pollutant.
[11] Compliance with the final effluent limitations for aluminum can be demonstrated using either total or acid-soluble (inductively coupled plasma/atomic emission spectrometry or inductively coupled plasma/mass spectrometry) analysis methods, as supported by USEPA's Ambient Water Quality Criteria for Aluminum document (EPA 440/5-86-008), or other standard methods that exclude aluminum silicate particles as approved by the Executive Officer.
[12] Concurrent with whole effluent toxicity monitoring.
[13] pH and temperature shall be recorded at the time of ammonia sample collection.
[14] Total chlorine residual must be monitored with a method sensitive to and accurate at the permitted level of 0.01 mg/L. Monitoring for chlorine residual is required only during periods when sodium hypochlorite is being used in the treatment system.

V. WHOLE EFFLUENT TOXICITY TESTING REQUIREMENTS

A. Acute Toxicity Testing. The Discharger shall conduct acute toxicity testing to determine whether the effluent is contributing acute toxicity to the receiving water. The Discharger shall meet the following acute toxicity testing requirements:

1. *Monitoring Frequency* – The Discharger shall perform quarterly acute toxicity testing, concurrent with effluent ammonia sampling.

2. *Sample Types* – For static non-renewal and static renewal testing, the samples shall be grab samples and shall be representative of the volume and quality of the

Deleted: HYDROSCIENCE OPERATIONS, INC.

discharge. The effluent samples shall be taken at the effluent monitoring location EFF-001.

3. *Test Species* – Test species shall be fathead minnows (*Pimephales promelas*).

4. *Methods* – The acute toxicity testing samples shall be analyzed using EPA-821-R-02-012, Fifth Edition. Temperature, total residual chlorine, and pH shall be recorded at the time of sample collection. No pH adjustment may be made unless approved by the Executive Officer.

5. *Test Failure* – If an acute toxicity test does not meet all test acceptability criteria, as specified in the test method, the Discharger must re-sample and re-test as soon as possible, not to exceed 7 days following notification of test failure.

B. Chronic Toxicity Testing. The Discharger shall conduct three species chronic toxicity testing to determine whether the effluent is contributing chronic toxicity to the receiving water. The Discharger shall meet the following chronic toxicity testing requirements:

1. *Monitoring Frequency* – The Discharger shall perform quarterly three species chronic toxicity testing.

2. *Sample Types* – Effluent samples shall be flow proportional 24-hour composite samples and shall be representative of the volume and quality of the discharge. The effluent samples shall be taken at the effluent monitoring location EFF-001. The receiving water control shall be a grab sample obtained from the RSW-001 sampling location, as identified in this Monitoring and Reporting Program.

3. *Sample Volumes* – Adequate sample volumes shall be collected to provide renewal water to complete the test in the event that the discharge is intermittent.

4. *Test Species* – Chronic toxicity testing measures sublethal (e.g., reduced growth, reproduction) and/or lethal effects to test organisms exposed to an effluent compared to that of the control organisms. The Discharger shall conduct chronic toxicity tests with:

   - The cladoceran, water flea, *Ceriodaphnia dubia* (survival and reproduction test);
   - The fathead minnow, *Pimephales promelas* (larval survival and growth test); and
   - The green alga, *Selenastrum capricornutum* (growth test).

5. *Methods* – The presence of chronic toxicity shall be estimated as specified in *Short-term Methods for Estimating the Chronic Toxicity of Effluents and Receiving Waters to Freshwater Organisms, Fourth Edition*, EPA/821-R-02-013, October 2002.

6. *Reference Toxicant* – As required by the SIP, all chronic toxicity tests shall be conducted with concurrent testing with a reference toxicant and shall be reported with the chronic toxicity test results.

Deleted: HYDROSCIENCE OPERATIONS, INC.

7. *Dilutions* – For regular chronic toxicity monitoring, the testing shall be performed using 100% effluent and two controls. If toxicity is found in any regular effluent test, the Discharger must immediately retest using the dilution series identified in Table E-4, below. The receiving water control shall be used as the diluent (unless the receiving water is toxic). For accelerated and/or TRE monitoring, the chronic toxicity testing shall be performed using the full dilution series identified in the table, below.

Table E-4. Chronic Toxicity Testing Dilution Series

Sample	Dilutions (%)					Controls	
	100	75	50	25	12.5	Receiving Water	Laboratory Water
% Effluent	100	75	50	25	12.5	0	0
% Receiving Water	0	25	50	75	87.5	100	0
% Laboratory Water	0	0	0	0	0	0	100

8. *Test Failure* – The Discharger must re-sample and re-test as soon as possible, but no later than fourteen (14) days after receiving notification of a test failure. A test failure is defined as follows:

   a. The reference toxicant test or the effluent test does not meet all test acceptability criteria as specified in the *Short-term Methods for Estimating the Chronic Toxicity of Effluents and Receiving Waters to Freshwater Organisms, Fourth Edition*, EPA/821-R-02-013, October 2002 (Method Manual), and its subsequent amendments or revisions; or

   b. The percent minimum significant difference (PMSD) measured for the test exceeds the upper PMSD bound variability criterion in Table 6 on page 52 of the Method Manual. (A retest is only required in this case if the test results do not exceed the monitoring trigger specified in the Special Provision at section VI.C.2.a.iii. of the Order.)

C. **WET Testing Notification Requirements.** The Discharger shall notify the Regional Water Board within 24-hours after the receipt of test results exceeding the monitoring trigger during regular or accelerated monitoring, or an exceedance of the acute toxicity effluent limitation.

D. **WET Testing Reporting Requirements.** All toxicity test reports shall include the contracting laboratory's complete report provided to the Discharger and shall be in accordance with the appropriate "Report Preparation and Test Review" sections of the method manuals. At a minimum, whole effluent toxicity monitoring shall be reported as follows:

1. **Chronic WET Reporting.** Regular chronic toxicity monitoring results shall be reported to the Regional Water Board within 30 days following completion of the test, and shall contain, at minimum:

Deleted: HYDROSCIENCE OPERATIONS, INC.

a. The results expressed in TUc, measured as 100/NOEC, and also measured as 100/LC50, 100/EC25, 100/IC25, and 100/IC50, as appropriate.

b. The statistical methods used to calculate endpoints;

c. The statistical output page, which includes the calculation of the percent minimum significant difference (PMSD);

d. The dates of sample collection and initiation of each toxicity test; and

e. The results compared to the numeric toxicity monitoring trigger.

Additionally, the monthly discharger self-monitoring reports shall contain an updated chronology of chronic toxicity test results expressed in TUc, and organized by test species, type of test (survival, growth or reproduction), and monitoring frequency, i.e., either quarterly, monthly, accelerated, or Toxicity Reduction Evaluation (TRE).

2. **Acute WET Reporting.** Acute toxicity test results shall be submitted with the monthly discharger self-monitoring reports and reported as percent survival.

3. **TRE Reporting.** Reports for TREs shall be submitted in accordance with the schedule contained in the Discharger's approved TRE Workplan.

4. **Quality Assurance (QA).** The Discharger must provide the following information for QA purposes:

   a. Results of the applicable reference toxicant data with the statistical output page giving the species, NOEC, LOEC, type of toxicant, dilution water used, concentrations used, PMSD, and dates tested.

   b. The reference toxicant control charts for each endpoint, which include summaries of reference toxicant tests performed by the contracting laboratory.

   c. Any information on deviations or problems encountered and how they were dealt with.

VI. LAND DISCHARGE MONITORING REQUIREMENTS – Not Applicable

VII. RECLAMATION MONITORING REQUIREMENTS

A. Monitoring Location REC-001

1. The Discharger shall monitor reclaimed water used to irrigate on-site landscaping for exterior decorative fountains at REC-001 as follows:

Table E-5. Reclamation Monitoring Requirements

Parameter	Units	Sample Type	Minimum Sampling Frequency	Required Analytical Test Method
Volume of recycled water[1,2]	acre-feet	Varies	1/Month	--

Deleted: HYDROSCIENCE OPERATIONS, INC.

Parameter	Units	Sample Type	Minimum Sampling Frequency	Required Analytical Test Method
Total area of application	acres	Observation	1/Month	--
Nitrogen application rate[3,4]	lbs/acre/month	Calculated	1/Month	--
Salinity application rate[5]	lbs/acre/month	Varies[1]	1/Month[1]	--

1 Estimation of the volume of recycled water shall not include other potable or non-potable "make-up" water also used to irrigate landscape, if any.
2 May be estimated based on daily percentage of recycled water supplied via a non-potable water supply system.
3 Nitrogen application rate shall consider nutrients contained in the recycled water, based on monthly analytical data provided by the Discharger to the Regional Water Board.
4 Nitrogen concentrations shall be calculated and reported "as N." For example, nitrate-nitrogen = 27 mg/L (as NO_3) shall be converted and reported as nitrate-nitrogen = 6 mg/L (as N).
5 Salinity application rate shall be calculated using the applied volume of recycled, actual application area, the most recent results for the concentration of total dissolved solids in the recycled water.

2. Each month, the Discharger shall verify that the recycled water has been filtered and disinfected consistent with the criteria for disinfected tertiary recycled water. The Discharger shall track turbidity and disinfection parameters. Exceedances of turbidity or disinfection standards[1] shall be documented and explained.

VIII. RECEIVING WATER MONITORING REQUIREMENTS – SURFACE WATER

A. Monitoring Locations RSW-001 and RSW-002

1. The Discharger shall monitor Orchard Creek at RSW-001 and RSW-002 as follows:

Table E-6. Receiving Water Monitoring Requirements

Parameter	Units	Sample Type	Minimum Sampling Frequency	Required Analytical Test Method
Conventional Pollutants				
pH	standard units	Grab	1/Week[1]	2
Priority Pollutants				
Priority Pollutants and Other Constituents of Concern[3]	µg/L	Grab	4	5,6,7
Non-Conventional Pollutants				
Ammonia Nitrogen, Total (as N)	mg/L	Grab	1/Quarter	2
Dissolved Oxygen	mg/L	Grab	1/Week	2
Electrical Conductivity @ 25°C	µmhos/cm	Grab	1/Week	2
Fecal Coliform Organisms	MPN/100 mL	Grab	1/Week	2
Hardness (as $CaCO_3$)	mg/L	Grab	1/Month	2
Temperature	°C	Grab	1/Week[1]	2
Turbidity	NTU	Grab	1/Week	2

[1] Title 22, Sections 60301.320, 60301.230(a), and 60301.230 (b).

Deleted: HYDROSCIENCE OPERATIONS, INC.

Parameter	Units	Sample Type	Minimum Sampling Frequency	Required Analytical Test Method

[1] Monitoring for pH and temperature shall be conducted concurrently with ammonia sampling.
[2] Pollutants shall be analyzed using the analytical methods described in 40 CFR Part 136.
[3] See List of Priority Pollutants and Other Pollutants of Concern in Attachment I.
[4] Priority pollutants shall be sampled quarterly at RSW-001 during the third year following the date of permit adoption and shall be conducted concurrently with effluent monitoring for priority pollutants. See Attachment I for more detailed requirements related to performing the priority pollutant monitoring.
[5] Pollutants shall be analyzed using the analytical methods described in 40 CFR Part 136; for priority pollutants the methods must meet the lowest minimum levels (MLs) specified in Appendix 4 of the SIP, where no methods are specified for a given pollutant, by methods approved by this Regional Water Board or the State Water Board.

2. In conducting the receiving water monitoring, a log shall be kept of the receiving water conditions throughout the reach bounded by RSW-001 and RSW-002. Attention shall be given to the presence or absence of:

a. Floating or suspended matter;
b. Discoloration;
c. Bottom deposits;
d. Aquatic life;
e. Visible films, sheens, or coatings;
f. Fungi, slimes, or objectionable growths; and
g. Potential nuisance conditions.

Notes on receiving water conditions shall be summarized in the monitoring report.

IX. OTHER MONITORING REQUIREMENTS

A. Biosolids

1. Monitoring Location BIO-001

a. A composite sample of sludge shall be collected annually at Monitoring Location BIO-001 in accordance with USEPA's *POTW Sludge Sampling and Analysis Guidance Document*, August 1989, and tested for the metals listed in Title 22 (Division 4, Chapter 15, Article 4, §64431).

b. Sampling records shall be retained for a minimum of **5 years**. A log shall be maintained of sludge quantities generated and of handling and disposal activities. The frequency of entries is discretionary; however, the log must be complete enough to serve as a basis for part of the annual report.

B. Municipal Water Supply

1. Monitoring Location SPL-001

The Discharger shall monitor the municipal water supply at SPL-001 as follows.

Deleted: HYDROSCIENCE OPERATIONS, INC.

Table E-7. Municipal Water Supply Monitoring Requirements

Parameter	Units	Sample Type	Minimum Sampling Frequency	Required Analytical Test Method
Electrical Conductivity @ 25°C	µmhos/cm	Grab[1]	1/Quarter	[2]
Total Dissolved Solids	mg/L	Grab	1/Quarter	[2]

[1] If the water supply is from more than one source, electrical conductivity shall be reported as a weighted average and include copies of supporting calculations.
[2] Pollutants shall be analyzed using the analytical methods described in 40 CFR Part 136.

C. Ultraviolet Disinfection System

1. Monitoring Location UVS-001

The Discharger shall monitor the UV disinfection system at UVS-001 as follows:

Table E-8. Ultraviolet Disinfection System Monitoring Requirements

Parameter	Units	Sample Type	Minimum Sampling Frequency
Flow rate	MGD	Meter	Continuous[1]
Turbidity [2]	NTU	Meter[3]	Continuous[1]
Number of UV banks in operation	Number	Meter	Continuous[1]
UV Transmittance	Percent (%)	Meter	Continuous[1]
UV Power Setting	Percent (%)	Meter	Continuous[1]
UV Dose [4]	MW-sec/cm^2	Calculated	Continuous[1]

[1] For continuous analyzers, the Discharger shall report documented routine meter maintenance activities, including date, time of day, and duration, in which the analyzer(s) is not in operation.
[2] Report daily average turbidity and maximum. If the influent exceeds 10 NTU, collect a sample for total coliform organisms and report the duration of the turbidity exceedance.
[3] The turbidity meter shall be stationed immediately after the filters, prior to the UV disinfection process.
[4] Report daily minimum UV dose, daily average UV dose, and weekly average UV dose. For the daily minimum UV dose, also report associated number of banks, gallons per minute per lamp, and UV transmittance used in the calculation. If effluent discharge has received less than the minimum UV dose and is not diverted from discharging to Orchard Creek, report the duration and dose calculation variables associated with each incident.

X. REPORTING REQUIREMENTS

A. General Monitoring and Reporting Requirements

1. The Discharger shall comply with all Standard Provisions (Attachment D) related to monitoring, reporting, and recordkeeping.

2. Upon written request of the Regional Water Board, the Discharger shall submit a summary monitoring report. The report shall contain both tabular and graphical summaries of the monitoring data obtained during the previous year(s).

3. **Compliance Time Schedules.** For compliance time schedules included in the Order, the Discharger shall submit to the Regional Water Board, on or before each compliance due date, the specified document or a written report detailing compliance or noncompliance with the specific date and task. If noncompliance is reported, the Discharger shall state the reasons for noncompliance and include an estimate of the date when the Discharger will be in compliance. The Discharger

Deleted: HYDROSCIENCE OPERATIONS, INC.

shall notify the Regional Water Board by letter when it returns to compliance with the compliance time schedule.

4. The Discharger shall report to the Regional Water Board any toxic chemical release data it reports to the State Emergency Response Commission within 15 days of reporting the data to the Commission pursuant to section 313 of the "*Emergency Planning and Community Right to Know Act*" of 1986.

B. Self Monitoring Reports (SMRs)

1. At any time during the term of this permit, the State Water Board or the Regional Water Board may notify the Discharger to electronically submit Self-Monitoring Reports (SMRs) using the State Water Board's California Integrated Water Quality System (CIWQS) Program Web site (http://www.waterboards.ca.gov/ciwqs/index.html). Until such notification is given, the Discharger shall submit hard copy SMRs. The CIWQS Web site will provide additional directions for SMR submittal in the event there will be service interruption for electronic submittal.

2. The Discharger shall report in the SMR the results for all monitoring specified in this Monitoring and Reporting Program under sections III through IX. The Discharger shall submit monthly SMRs including the results of all required monitoring using USEPA-approved test methods or other test methods specified in this Order. If the Discharger monitors any pollutant more frequently than required by this Order, the results of this monitoring shall be included in the calculations and reporting of the data submitted in the SMR.

3. Monitoring periods and reporting for all required monitoring shall be completed according to the following schedule:

Table E-9. Monitoring Periods and Reporting Schedule

Sampling Frequency	Monitoring Period Begins On…	Monitoring Period	SMR Due Date
Continuous	First day of the calendar month following the permit effective date or on permit effective date if that date is first day of the month	All	First day of second calendar month following month of sampling
1/Day	First day of the calendar month following the permit effective date or on permit effective date if that date is first day of the month	(Midnight through 11:59 PM) or any 24-hour period that reasonably represents a calendar day for purposes of sampling	First day of second calendar month following month of sampling
1/Week	First Sunday of the calendar month following the permit effective date or on permit effective date if on a Sunday	Sunday through Saturday	First day of second calendar month following month of sampling
3/Week	First Sunday of the calendar month following the permit effective date or on permit effective date if on a Sunday	Sunday through Saturday	First day of second calendar month following month of sampling

Deleted: HYDROSCIENCE OPERATIONS, INC.

Sampling Frequency	Monitoring Period Begins On…	Monitoring Period	SMR Due Date
1/Month	First day of calendar month following permit effective date or on permit effective date if that date is first day of the month	First day of calendar month through last day of calendar month	First day of second calendar month following month of sampling
1/Quarter	Closest of 1 January, 1 April, 1 July, or 1 October following (or on) permit effective date	1 January through 1 March 1 April through 30 June 1 July through 30 September 1 October through 31 December	1 May 1 August 1 November 1 February
1/Year	1 January following (or on) permit effective date	1 January through 31 December	1 February

4. **Reporting Protocols.** The Discharger shall report with each sample result the applicable reported Minimum Level (ML) and the current Method Detection Limit (MDL), as determined by the procedure in 40 CFR Part 136.

   The Discharger shall report the results of analytical determinations for the presence of chemical constituents in a sample using the following reporting protocols:

   a. Sample results greater than or equal to the reported ML shall be reported as measured by the laboratory (i.e., the measured chemical concentration in the sample).

   b. Sample results less than the RL, but greater than or equal to the laboratory's MDL, shall be reported as "Detected, but Not Quantified," or DNQ. The estimated chemical concentration of the sample shall also be reported.

   For the purposes of data collection, the laboratory shall write the estimated chemical concentration next to DNQ as well as the words "Estimated Concentration" (may be shortened to "Est. Conc."). The laboratory may, if such information is available, include numerical estimates of the data quality for the reported result. Numerical estimates of data quality may be percent accuracy (+ a percentage of the reported value), numerical ranges (low to high), or any other means considered appropriate by the laboratory.

   c. Sample results less than the laboratory's MDL shall be reported as "Not Detected," or ND.

   d. Dischargers are to instruct laboratories to establish calibration standards so that the ML value (or its equivalent if there is differential treatment of samples relative to calibration standards) is the lowest calibration standard. At no time is the Discharger to use analytical data derived from extrapolation beyond the lowest point of the calibration curve.

5. **Compliance Determination.** Compliance with effluent limitations for priority pollutants shall be determined using sample reporting protocols defined above and in Attachment A of this Order. For purposes of reporting and administrative enforcement by the Regional Water Board and the State Water Board, the

Deleted: HYDROSCIENCE OPERATIONS, INC.

Discharger shall be deemed out of compliance with effluent limitations if the concentration of the priority pollutant in the monitoring sample is greater than the effluent limitation and greater than or equal to the reporting level (RL).

6. **Multiple Sample Data.** When determining compliance with an AMEL, AWEL, or MDEL for priority pollutants and more than one sample result is available, the Discharger shall compute the arithmetic mean unless the data set contains one or more reported determinations of "Detected, but Not Quantified" (DNQ) or "Not Detected" (ND). In those cases, the Discharger shall compute the median in place of the arithmetic mean in accordance with the following procedure:

   a. The data set shall be ranked from low to high, ranking the reported ND determinations lowest, DNQ determinations next, followed by quantified values (if any). The order of the individual ND or DNQ determinations is unimportant.

   b. The median value of the data set shall be determined. If the data set has an odd number of data points, then the median is the middle value. If the data set has an even number of data points, then the median is the average of the two values around the middle unless one or both of the points are ND or DNQ, in which case the median value shall be the lower of the two data points where DNQ is lower than a value and ND is lower than DNQ.

7. The Discharger shall submit SMRs in accordance with the following requirements:

   a. The Discharger shall arrange all reported data in a tabular format. The data shall be summarized to clearly illustrate whether the facility is operating in compliance with interim and/or final effluent limitations. The Discharger is not required to duplicate the submittal of data that is entered in a tabular format within CIWQS. When electronic submittal of data is required and CIWQS does not provide for entry into a tabular format within the system, the Discharger shall electronically submit the data in a tabular format as an attachment.

   b. The Discharger shall attach a cover letter to the SMR. The information contained in the cover letter shall clearly identify violations of the WDRs; discuss corrective actions taken or planned; and the proposed time schedule for corrective actions. Identified violations must include a description of the requirement that was violated and a description of the violation.

   c. SMRs must be submitted to the Regional Water Board, signed and certified as required by the Standard Provisions (Attachment D), to the address listed below:

      Regional Water Quality Control Board
      Central Valley Region
      NPDES Compliance and Enforcement Unit
      11020 Sun Center Dr., Suite #200
      Rancho Cordova, CA 95670-6114

Deleted: HYDROSCIENCE OPERATIONS, INC.

C. Discharge Monitoring Reports (DMRs) – Not Applicable

D. Other Reports

1. The Discharger shall report the results of any special studies, acute and chronic toxicity testing, or TRE/TIE required by Special Provisions VI.C. of this Order. The Discharger shall submit reports with the first monthly SMR scheduled to be submitted on or immediately following the report due date.

2. Within 60 days of permit adoption, the Discharger shall submit a report outlining minimum levels, method detection limits, and analytical methods for approval, with a goal to achieve detection levels below applicable water quality criteria. At a minimum, the Discharger shall comply with the monitoring requirements for CTR constituents as outlined in section 2.3 and 2.4 of the SIP.

3. The Discharger's sanitary sewer system collects wastewater using sewers, pipes, pumps, and/or other conveyance systems and directs the raw sewage to the wastewater treatment plant. A "sanitary sewer overflow" is defined as a discharge to ground or surface water from the sanitary sewer system at any point upstream of the wastewater treatment plant. Sanitary sewer overflows are prohibited by this Order. All violations must be reported as required in Standard Provisions. Facilities (such as wet wells, regulated impoundments, tanks, highlines, etc.) may be part of a sanitary sewer system and discharges to these facilities are not considered sanitary sewer overflows, provided that the waste is fully contained within these temporary storage facilities.

4. **Annual Operations Report.** By 30 January of each year, the Discharger shall submit a written report to the Executive Officer containing the following:

   a. The names, certificate grades, and general responsibilities of all persons employed at the Facility.

   b. The names and telephone numbers of persons to contact regarding the plant for emergency and routine situations.

   c. A statement certifying when the flow meter(s) and other monitoring instruments and devices were last calibrated, including identification of who performed the calibration.

   d. A statement certifying whether the current operation and maintenance manual, and contingency plan, reflect the wastewater treatment plant as currently constructed and operated, and the dates when these documents were last revised and last reviewed for adequacy.

   e. The Discharger may also be requested to submit an annual report to the Regional Water Board with both tabular and graphical summaries of the monitoring data obtained during the previous year. Any such request shall be made in writing. The report shall discuss the compliance record. If violations

Deleted: HYDROSCIENCE OPERATIONS, INC.

have occurred, the report shall also discuss the corrective actions taken and planned to bring the discharge into full compliance with the waste discharge requirements.

5. **Annual Recycled Water Report.** By 15 April of each year, the Discharger shall compile information for the use area consistent with the format in Attachment M and submit to the Regional Water Board. The submittal shall also contain the following items:

   a. A summary and discussion of the compliance record for the reporting period. If violations have occurred, the report shall also discuss the corrective actions taken and planned to bring the discharge into full compliance with this Order.

   b. A description of the measures employed by the Discharger during the reporting period to conduct periodic inspections of the use area. The description shall include the following elements: date of inspections, description of any violations identified during the reporting period including any indications of unauthorized cross-connections, and all actions taken or planned for correcting violations, such as operation or facility modifications.

   The periodic inspection shall also include an evaluation verifying that the application of recycled water to the use area occurs at reasonable agronomic rates. The agronomic rate evaluation shall consider all applied nutrients from all sources (directly applied and as contained in the recycled water) the seasonal nutrient demand for the specific plants being grown, soil, and climate. If the agronomic rate evaluation determines that exceedances of the agronomic rate may be occurring, the Discharger shall implement corrective actions to ensure recycled water use occurs at reasonable agronomic rates.

   If the Discharger has previously submitted a report describing corrective actions and/or a time schedule for implementing the corrective actions, reference to the previous correspondence will be satisfactory.

   c. A description of approved amendments to the Title 22 Engineering Report, if any.

      i. A description of new use sites approved by DPH or USEPA. The description shall include information necessary for the DPH or USEPA to evaluate new use sites pursuant to the Title 22 Requirements. Examples of necessary information may include location of backflow prevention devices, drinking fountains, groundwater wells, etc.

      ii. Copies of approval letter(s) prepared by DPH or USEPA regarding such amendments to the Title 22 Engineering Report.

6. **Recycled Water Spill Reporting**

   a. The Discharger shall report any noncompliance that may endanger human health or the environment. The Discharger shall immediately report orally, or

Deleted: HYDROSCIENCE OPERATIONS, INC.

electronically if available, information of the noncompliance as soon as (1) the Discharger has knowledge of the discharge, (2) notification is possible, and (3) notification can be provided without substantially impeding cleanup or other emergency measures, to the Regional Water Board.

A written report shall also be provided to the State Water Board within five (5) business days of the time the Discharger becomes aware of the incident. The written report shall contain a description of the noncompliance and its cause, the period of noncompliance, the anticipated time to achieve full compliance, and the steps taken or planned, to reduce, eliminate, and prevent recurrence of the noncompliance.

b. The unauthorized discharge of 50,000 gallons or more of “disinfected tertiary recycled water” shall be reported as described in section X.D.6.a above. The unauthorized discharge of 1,000 gallons or more of “disinfected tertiary recycled water” shall be reported to the Regional Water Board as soon as possible, but no later than seventy-two (72) hours after becoming aware of the unauthorized discharge.

Deleted: HYDROSCIENCE OPERATIONS, INC.

ATTACHMENT F – FACT SHEET

Table of Contents

I. Permit Information F-3
II. Facility Description F-4
A. Description of Wastewater and Biosolids Treatment or Controls F-4
B. Discharge Points and Receiving Waters F-4
C. Summary of Historical Requirements and Self-Monitoring Report (SMR) Data F-5
D. Compliance Summary F-7
E. Planned Changes F-8
III. Applicable Plans, Policies, and Regulations F-8
A. Legal Authorities F-8
B. California Environmental Quality Act (CEQA) F-8
C. State and Federal Regulations, Policies, and Plans F-8
D. Impaired Water Bodies on CWA 303(d) List F-10
E. Other Plans, Polices and Regulations F-11
IV. Rationale For Effluent Limitations and Discharge Specifications F-11
A. Discharge Prohibitions F-12
B. Technology-Based Effluent Limitations F-13
1. Scope and Authority F-13
2. Applicable Technology-Based Effluent Limitations F-13
C. Water Quality-Based Effluent Limitations (WQBELs) F-15
1. Scope and Authority F-15
2. Applicable Beneficial Uses and Water Quality Criteria and Objectives F-16
3. Determining the Need for WQBELs F-26
4. WQBEL Calculations F-44
5. Whole Effluent Toxicity (WET) F-45
D. Final Effluent Limitations F-47
1. Mass-based Effluent Limitations F-49
2. Averaging Periods for Effluent Limitations F-50
3. Satisfaction of Anti-Backsliding Requirements F-50
4. Satisfaction of Antidegradation Policy F-52
5. Stringency of Requirements for Individual Pollutants F-58
E. Interim Effluent Limitations – Not Applicable F-59
F. Land Discharge Specifications – Not Applicable F-59
G. Reclamation Specifications F-59
V. Rationale for Receiving Water Limitations F-59
A. Surface Water F-59
B. Groundwater F-60
VI. Rationale for Monitoring and Reporting Requirements F-61
A. Influent Monitoring F-61
B. Effluent Monitoring F-61
C. Whole Effluent Toxicity Testing Requirements F-63
D. Receiving Water Monitoring F-63
1. Surface Water F-63

Deleted: HYDROSCIENCE OPERATIONS, INC.

2. Groundwater – Not Applicable F-64
E. Other Monitoring Requirements F-64
1. Biosolids Monitoring F-64
2. Water Supply Monitoring F-64
3. Ultraviolet Disinfection System Monitoring F-64
4. Reclaimed Water Monitoring F-64
VII. Rationale for Provisions F-64
A. Standard Provisions F-64
B. Special Provisions F-65
1. Reopener Provisions F-65
2. Special Studies and Additional Monitoring Requirements F-65
3. Best Management Practices and Pollution Prevention F-69
4. Construction, Operation, and Maintenance Specifications F-69
5. Special Provisions for Municipal Facilities (POTWs Only) F-70
6. Other Special Provisions F-70
7. Compliance Schedules – Not Applicable F-71
VIII. Public Participation F-71
A. Notification of Interested Parties F-71
B. Written Comments F-71
C. Public Hearing F-71
D. Waste Discharge Requirements Petitions F-72
E. Information and Copying F-72
F. Register of Interested Persons F-72
G. Additional Information F-72

List of Tables

Table F-1. Facility Information F-3
Table F-2. Historic Effluent Limitations and Monitoring Data F-5
Table F-3. Summary of Technology-based Effluent Limitations F-14
Table F-4. Basin Plan Beneficial Uses F-17
Table F-5. Zinc ECA Evaluation F-23
Table F-6. Lead ECA Evaluation F-25
Table F-7. Summary of Chronic Aquatic Toxicity Results F-46
Table F-8. Summary of Final Effluent Limitations F-47

Deleted: HYDROSCIENCE OPERATIONS, INC.

ATTACHMENT F – FACT SHEET

As described in the Findings in section II of this Order, this Fact Sheet includes the legal requirements and technical rationale that serve as the basis for the requirements of this Order.

This Order has been prepared under a standardized format to accommodate a broad range of discharge requirements for Dischargers in California. Only those sections or subsections of this Order that are specifically identified as "not applicable" have been determined not to apply to this Discharger. Sections or subsections of this Order not specifically identified as "not applicable" are fully applicable to this Discharger.

I. PERMIT INFORMATION

The following table summarizes administrative information related to the Facility.

Table F-1. Facility Information

WDID	
Discharger	United Auburn Indian Community
Name of Facility	Thunder Valley Casino Wastewater Treatment Plant
Facility Address	1200 Athens Avenue Lincoln, CA 95648 Placer County
Facility Contact, Title and Phone	Greg Baker, United Auburn Indian Community, (916) 240-4232 and (530) 883-2385
Authorized Person to Sign and Submit Reports	Jessica Tavares, Chairperson, (530) 883-2390
Mailing Address	10720 Indian Hill Road, Auburn, CA 95603
Billing Address	Same as Facility Address
Type of Facility	Publicly owned treatment works (POTW)
Major or Minor Facility	Minor
Threat to Water Quality	1
Complexity	A
Pretreatment Program	N/A
Reclamation Requirements	Producer – Land Irrigation
Facility Permitted Flow	Existing – 0.35 million gallons per day (MGD) Proposed (first phase) – 0.7 MGD Proposed (second phase) – 0.875 MGD
Facility Design Flow	Existing – 0.35 MGD, peak daily flow capacity Proposed (first phase) – 0.7 MGD Proposed (second phase) – 0.875 MGD
Watershed	Lower Sacramento
Receiving Water	Orchard Creek
Receiving Water Type	Inland Surface Water

Deleted: and Hydroscience Operations, Inc.

Deleted: Scott Garawitz, General Manager, (916) 408-8398

A. The United Auburn Indian Community (hereinafter Discharger) is the owner and operator of the Thunder Valley Casino Wastewater Treatment Plant (hereinafter Facility), a POTW.

Deleted: Hydroscience Operations, Inc. is the operator of the Facility. Together, the United Auburn Indian Community and Hydroscience Operations, Inc. are hereinafter referred to as the Discharger.

Deleted: HYDROSCIENCE OPERATIONS, INC.

For the purposes of this Order, references to the "discharger" or "permittee" in applicable federal and state laws, regulations, plans, or policy are held to be equivalent to references to the Discharger herein.

B. The Facility discharges wastewater to Orchard Creek, a water of the United States, and is currently regulated by Order No. R5-2005-0032 which was adopted on 17 March 2005 and expires on 1 March 2010.

C. The Discharger filed a report of waste discharge and submitted an application for renewal of its Waste Discharge Requirements (WDRs) and National Pollutant Discharge Elimination System (NPDES) permit on 4 January 2008. Supplemental information was requested on 13 March 2009, 2 April 2009, and 20 May 2009 and received on 31 March 2009, 15 April 2009, and 22 May 2009, respectively. Supplemental information supporting the Discharger's antidegradation analysis was received on 26 October 2009. A site visit was conducted on 14 May 2009 to observe operations and collect additional data to develop permit limitations and conditions.

II. FACILITY DESCRIPTION

The Discharger owns and operates a wastewater collection, treatment, and disposal system, and provides sewerage service to the Thunder Valley Casino, a gaming and entertainment facility. As described further in section II.E of this Fact Sheet (Attachment F), the Discharger is currently planning to upgrade the Facility to accommodate the expansion of the existing gaming and restaurant facilities and the addition of a hotel, performing arts center, and parking structure.

A. Description of Wastewater and Biosolids Treatment or Controls

The treatment system consists of an influent pump station, headworks (flow measurement and fine screening), immersed membrane bioreactor (IMB), and ultraviolet (UV) light disinfection. The IMB combines an anoxic zone, aeration, clarification, and membrane filtration in a single tank. The filtration stage is a microfiltration process, in which wastewater is pulled by vacuum through membranes. The filter membrane nominal pore size is 0.1 microns. The current design peak daily flow for the treatment system is 0.35 MGD. As needed, sludge is pumped directly from the process overflow tank to two belt filter presses and then trucked off-site to a local landfill.

B. Discharge Points and Receiving Waters

1. The Facility is located in Section 32 and 33, T12N, R6E, MDB&M, as shown in Attachment B, a part of this Order.

2. Treated municipal wastewater is discharged at Discharge Point No. 001 to Orchard Creek, a water of the United States and a tributary to Auburn Ravine, East Side Canal, Cross Canal, and the Sacramento River at a point latitude 38° 50' 44" N and longitude 121° 19' 01" W.

Deleted: HYDROSCIENCE OPERATIONS, INC.

3. A portion of the treated municipal wastewater is also recycled and used on-site. The specific recycled water use areas include irrigation of the landscaping surrounding the Thunder Valley Casino and the Facility.

C. Summary of Historical Requirements and Self-Monitoring Report (SMR) Data

Effluent limitations contained in Order No. R5-2005-0032 for discharges from Discharge Point No. 001 (Monitoring Location EFF-001) and representative monitoring data from the term of Order No. R5-2005-0032 are as follows:

Table F-2. Historic Effluent Limitations and Monitoring Data

Parameter	Units	Effluent Limitation			Monitoring Data (From April 2005 to December 2008)		
		Average Monthly	Average Weekly	Maximum Daily	Highest Average Monthly Discharge	Highest Average Weekly Discharge	Highest Daily Discharge
Biochemical Oxygen Demand (5-day @ 20°C)	mg/L	10[1]	15[1]	20[1,2]	NR	NR	6
	lbs/day[3]	29	44	58	NR	NR	7.9
	% Removal	85	--	--	95[4]	--	--
Total Suspended Solids	mg/L	10[1]	15[1]	20[1,2]	NR	NR	ND
	lbs/day[3]	29	44	58	NR	NR	ND
	% Removal	85	--	--	81[4]	--	--
Total Coliform Organisms	MPN/100 mL	--	2.2[5]	23[6]	--	--	350
Settleable Solids	ml/L	0.1	--	0.2	NR	--	ND
Turbidity	NTU	--	5.0[7]	2.0[2]	--	--	10
Persistent Chlorinated Hydrocarbon Pesticides	µg/L	--	--	ND[8]	--	--	0.246[9]
Aluminum, Total Recoverable	µg/L	71[1,10]	--	143[1,2,10]	118	--	118
	lbs/day[3]	0.21	--	0.42[2]	0.136	--	0.136
Atrazine	µg/L	1.0	--	--	ND	--	--
	lbs/day[3]	0.003	--	--	ND	--	--
Boron	µg/L	700	--	--	2,500	--	--
	lbs/day[3]	2.0	--	--	2.59	--	--
Fluoride	µg/L	1,000	--	--	570	--	--
	lbs/day[3]	2.9	--	--	0.72	--	--
Methylene Blue Active Substances (MBAS)	µg/L	500	--	--	140	--	--
	lbs/day[3]	1.5	--	--	NR	--	--
Nitrate (as N)	µg/L	10,000	--	--	3,200	--	--
	lbs/day[3]	29	--	--	4.2	--	--
Sulfate	µg/L	250,000	--	--	61,000	--	--
	lbs/day[3]	730	--	--	79	--	--
Arsenic, Total Recoverable	µg/L	10[1]	--	--	3.1	--	--
	lbs/day[3]	0.03	--	--	0.003	--	--

Deleted: HYDROSCIENCE OPERATIONS, INC.

Parameter	Units	Effluent Limitation			Monitoring Data (From April 2005 to December 2008)		
		Average Monthly	Average Weekly	Maximum Daily	Highest Average Monthly Discharge	Highest Average Weekly Discharge	Highest Daily Discharge
Total Trihalomethanes[11]	µg/L	80	--	--	4	--	--
	lbs/day[3]	0.23	--	--	0.005	--	--
Electrical Conductivity (EC)	µmhos/cm	700	--	--	1,323	--	--
Total Chlorine Residual	mg/L	--	0.01[12]	0.02[13]	--	--	0.001
	lbs/day[3]	--	0.03[12]	0.06[13]	--	--	NR
Ammonia	mg/L	0.42	--	3.5[13]	NR	--	1.2
	lbs/day[3]	1.2	--	10.2[13]	NR	--	NR
Copper	mg/L	--	--	72[14]	24	--	24
		1.6[1,15]	--	3.1[1,2,15]			
	lbs/day[3]	--	--	0.21[14]	0.03	--	0.03
		0.0047[15]	--	0.0091[2,15]			
Bromoform	µg/L	--	--	21[16]	ND	--	ND
		4.3[17]	--	8.6[17]			
	lbs/day[3]	--	--	0.06[16]	ND	--	ND
		0.013[17]	--	0.03[17]			
Dibromochloromethane	µg/L	--	--	87[16]	1.8	--	1.8
		0.41[17]	--	0.82[17]			
	lbs/day[3]	--	--	0.25[16]	0.002	--	0.002
		0.001[17]	--	0.002[17]			
Dichlorobromomethane	µg/L	--	--	81[16]	ND	--	ND
		0.56[17]	--	1.1[17]			
	lbs/day[3]	--	--	0.24[16]	ND	--	ND
		0.002[17]	--	0.003[17]			
pH	standard units	--	--	6.5 – 8.5	--	--	6.4 – 8.3
Influent Flow	million gallons	--	--	0.35	--	--	NR
Acute Toxicity	% Survival	--	--	[18]	--	--	95[4]

Deleted: HYDROSCIENCE OPERATIONS, INC.

Parameter	Units	Effluent Limitation			Monitoring Data (From April 2005 to December 2008)		
		Average Monthly	Average Weekly	Maximum Daily	Highest Average Monthly Discharge	Highest Average Weekly Discharge	Highest Daily Discharge

NR – Not reported
ND – Non-detect

[1] To be ascertained by a 24-hour composite.
[2] Applied as a daily average effluent limitation.
[3] Based on a maximum daily treatment capacity of 0.35 MGD.
[4] Represents the minimum value reported.
[5] Applied as a 7-day median effluent limitation.
[6] Applied as an instantaneous maximum effluent limitation.
[7] The turbidity shall not exceed 5 NTU more than 5 percent of the time within a 24-hour period. At no time shall the turbidity exceed 10 NTU.
[8] ND (non-detectable), the non-detectable limitation applies to each individual pesticide at any detection level. No individual pesticide may be present in the discharge at detectable concentrations. The Discharger shall use EPA standard analytical techniques that have the lowest possible detectable level for persistent chlorinated hydrocarbon pesticides.
[9] Value reported in May 2006 and represents the sum of delta BHC (detected at 0.066 µg/L) and endrin aldehyde (detected at 0.18 µg/L). Follow-up samples were ND.
[10] Compliance can be demonstrated using either total, or acid-soluble (inductively coupled plasma/atomic emission spectrometry or inductively coupled plasma/mass spectrometry) analysis methods, as supported by USEPA's Ambient Water Quality Criteria for Aluminum document (EPA 440/5-86-008), or other standard methods that exclude aluminum silicate as approved by the Executive Officer.
[11] Total trihalomethanes is the sum of bromoform, bromodichloromethane, chloroform, and dibromochloromethane.
[12] Applied as a 4-day average effluent limitation.
[13] Applied as a 1-hour average effluent limitation.
[14] Interim effluent limitation effective until 1 March 2010, as specified in Resolution No. R5-2007-0143.
[15] Final effluent limitation effective from 1 March 2010 forward, as specified in Resolution No. R5-2007-0143.
[16] Interim effluent limitation effective until 11 March 2008.
[17] Final effluent limitation effective from 11 March 2008 forward.
[18] Survival of aquatic organisms in 96-hour bioassays of undiluted waste shall be no less than:
Minimum for any one bioassay ---------- 70%
Median for any three or more consecutive bioassays-------- 90%

D. Compliance Summary

1. The Regional Water Board issued Administrative Civil Liability (ACL) Complaint No. R5-2006-0502 on 7 March 2006, which proposed to assess an administrative civil liability of $435,000 against the Discharger for violations of Order Nos. 5-01-068 and R5-2005-0032 between September 2003 and January 2005. A Settlement Agreement and Mutual Release was entered into by the Discharger and the Assistant Executive Officer of the Regional Water Board on 31 January 2007, in which the Discharger agreed to pay $150,000 to the State Water Board's Cleanup and Abatement Account and complete the John D. Vincent Vernal Pool Preserve Enhancement Plan Supplemental Environmental Project at a cost of no less than $150,000.

Deleted: HYDROSCIENCE OPERATIONS, INC.

2. An inspection of the Facility was conducted on 5 December 2007. The following is a summary of the major findings from the inspection report:

   a. A chemical tube was laid across the roadway and was vulnerable to damage. The measures taken to reduce the probability of damage did not address the potential for damage to the treatment system.

   b. Some chemicals were stored without secondary containment and had the potential to drain into the treatment system via the Facility's storm drain system.

   c. One sample storage refrigerator did not have a thermometer, which is needed to demonstrate compliance with sample handling requirements.

E. Planned Changes

As part of their application, the Discharger identified plans to expand the treatment capacity of the existing on-site IMB tertiary wastewater treatment plant in two phases to accommodate expansion of existing gaming and restaurant facilities and the addition of a hotel, performing arts center, and parking structure. As a result, the Discharger has requested authorization to increase the design peak daily flow capacity from 0.35 MGD to 0.7 MGD in the first phase and to 0.875 MGD in the second phase. The expansion of the Facility will include improvements to influent screening, biological treatment, and membrane filtration capacity, effluent disinfection, and the discharge outfall diffuser. The first phase of the expansion of the Facility is expected to be completed by summer 2010. This Order authorizes the discharge of up to 0.7 MGD and 0.875 MGD after notification to the Regional Water Board as specified in section VI.C.6 of the Order.

Deleted: E

III. APPLICABLE PLANS, POLICIES, AND REGULATIONS

The requirements contained in this Order are based on the applicable plans, policies, and regulations identified in the Findings in section II of this Order. The applicable plans, policies, and regulations relevant to the discharge include the following:

A. Legal Authorities

This Order is issued pursuant to regulations in the Clean Water Act (CWA) and the California Water Code (CWC) as specified in the Finding contained at section II.C of this Order.

B. California Environmental Quality Act (CEQA)

This Order meets the requirements of CEQA as specified in the Finding contained at section II.E of this Order.

C. State and Federal Regulations, Policies, and Plans

1. **Water Quality Control Plans.** This Order implements the following water quality control plans as specified in the Finding contained at section II.H of this Order.

Deleted: HYDROSCIENCE OPERATIONS, INC.

Deleted: *October 2007*

a. *Water Quality Control Plan, Fourth Edition (Revised September 2009), for the Sacramento and San Joaquin River Basins* (Basin Plan).

2. **National Toxics Rule (NTR) and California Toxics Rule (CTR).** This Order implements the NTR and CTR as specified in the Finding contained at section II.I of this Order.

3. **State Implementation Policy (SIP).** This Order implements the SIP as specified in the Finding contained at section II.J of this Order.

4. **Alaska Rule.** This Order is consistent with the Alaska Rule as specified in the Finding contained at section II.L of this Order.

5. **Antidegradation Policy.** As specified in the Finding contained at section II.N of this Order and as discussed in detail in the Fact Sheet (Attachment F, Section IV.D.4.), the discharge is consistent with the antidegradation provisions of 40 CFR section 131.12 and State Water Resources Control Board (State Water Board) Resolution 68-16.

6. **Anti-Backsliding Requirements.** This Order is consistent with anti-backsliding policies as specified in the Finding contained at section II.O of this Order. Compliance with the anti-backsliding requirements is discussed in the Fact Sheet (Attachment F, Section IV.D.3).

7. **Emergency Planning and Community Right to Know Act**

Section 13263.6(a) of the CWC, requires that "*the Regional Water Board shall prescribe effluent limitations as part of the waste discharge requirements of a POTW for all substances that the most recent toxic chemical release data reported to the state emergency response commission pursuant to Section 313 of the Emergency Planning and Community Right to Know Act of 1986 (42 U.S.C. Sec. 11023) (EPCRA) indicate as discharged into the POTW, for which the State Water Board or the Regional Water Board has established numeric water quality objectives, and has determined that the discharge is or may be discharged at a level which will cause, have the reasonable potential to cause, or contribute to, an excursion above any numeric water quality objective*".

The most recent toxic chemical data report does not indicate any reportable off-site releases or discharges to the collection system for this Facility. Therefore, a reasonable potential analysis (RPA) based on information from EPCRA cannot be conducted. Based on information from EPCRA, there is no reasonable potential to cause or contribute to an excursion above any numeric water quality objectives included within the Basin Plan or in any State Water Board plan, so no effluent limitations are included in this permit pursuant to CWC section 13263.6(a).

However, as detailed elsewhere in this Order, available effluent data indicate that there are constituents present in the effluent that have a reasonable potential to

Deleted: HYDROSCIENCE OPERATIONS, INC.

cause or contribute to exceedances of water quality standards and require inclusion of effluent limitations based on federal and state laws and regulations.

8. **Storm Water Requirements**

   USEPA promulgated federal regulations for storm water on 16 November 1990 in 40 CFR Parts 122, 123, and 124. The NPDES Industrial Storm Water Program regulates storm water discharges from wastewater treatment facilities. Wastewater treatment plants are applicable industries under the storm water program and are obligated to comply with the federal regulations. The State Water Board does not require wastewater treatment facilities with design flows less than 1 MGD to obtain coverage under the Industrial Stormwater General Order. This Order does not regulate storm water.

9. **Endangered Species Act.** This Order is consistent with the Endangered Species Act as specified in the Finding contained at section II.P of this Order.

D. Impaired Water Bodies on CWA 303(d) List

1. Under section 303(d) of the 1972 CWA, states, territories and authorized tribes are required to develop lists of water quality limited segments. The waters on these lists do not meet water quality standards, even after point sources of pollution have installed the minimum required levels of pollution control technology. On 30 November 2006 USEPA gave final approval to California's 2006 section 303(d) List of Water Quality Limited Segments. The Basin Plan references this list of Water Quality Limited Segments (WQLSs), which are defined as "…*those sections of lakes, streams, rivers or other fresh water bodies where water quality does not meet (or is not expected to meet) water quality standards even after the application of appropriate limitations for point sources* (40 CFR Part 130, et seq.)." The Basin Plan also states, "*Additional treatment beyond minimum federal standards will be imposed on dischargers to [WQLSs]. Dischargers will be assigned or allocated a maximum allowable load of critical pollutants so that water quality objectives can be met in the segment*." Orchard Creek, Auburn Ravine, East Side Canal, and Cross Canal are not listed on the 303(d) list of impaired water bodies. The Sacramento River from Knights Landing to the Delta is listed as a WQLS for mercury and unknown toxicity in the 303(d) list of impaired water bodies. Effluent limitations for mercury are included in this Order.

2. **Total Maximum Daily Loads (TMDLs).** USEPA requires the Regional Water Board to develop TMDLs for each 303(d) listed pollutant and water body combination. TMDLs have not been adopted for Orchard Creek, Auburn Ravine, East Side Canal, Cross Canal, or the Sacramento River from Knights Landing to the Delta.

   The 303(d) listings have been considered in the development of the Order. A pollutant-by-pollutant evaluation of each pollutant of concern is described in section VI.C.3. of this Fact Sheet.

Deleted: HYDROSCIENCE OPERATIONS, INC.

E. Other Plans, Policies and Regulations

a. Title 27, California Code of Regulations (CCR), section 20005 *et seq*. (hereafter Title 27) Discharges of wastewater to land, including but not limited to evaporation ponds or percolation ponds, are exempt from the requirements of Title 27, CCR, based on section 20090 *et seq.* The Facility does not contain unlined treatment or storage facilities. The facility provides tertiary treated wastewater for landscape irrigation where a determination has been made by the Central Valley Water Board that the facilities meet the exemptions from Title 27 for Reuse. The Regional Water Board's findings regarding Title 27 exemptions is based on the discharge associated with the use of tertiary treated recycled water in accordance with the exemption provided in Title 27, pursuant to Title 27 CCR section 20090(b)(h).

Deleted: ¶

IV. RATIONALE FOR EFFLUENT LIMITATIONS AND DISCHARGE SPECIFICATIONS

Effluent limitations and toxic and pretreatment effluent standards established pursuant to sections 301 (Effluent Limitations), 302 (Water Quality Related Effluent Limitations), 304 (Information and Guidelines), and 307 (Toxic and Pretreatment Effluent Standards) of the CWA and amendments thereto are applicable to the discharge.

The CWA mandates the implementation of effluent limitations that are as stringent as necessary to meet water quality standards established pursuant to state or federal law [33 U.S.C., §1311(b)(1)(C); 40 CFR 122.44(d)(1)]. NPDES permits must incorporate discharge limits necessary to ensure that water quality standards are met. This requirement applies to narrative criteria as well as to criteria specifying maximum amounts of particular pollutants. Pursuant to federal regulations, 40 CFR 122.44(d)(1)(i), NPDES permits must contain limits that control all pollutants that "*are or may be discharged at a level which will cause, have the reasonable potential to cause, or contribute to an excursion above any state water quality standard, including state narrative criteria for water quality*." Federal regulations, 40 CFR 122.44(d)(1)(vi), further provide that "[w]*here a state has not established a water quality criterion for a specific chemical pollutant that is present in an effluent at a concentration that causes, has the reasonable potential to cause, or contributes to an excursion above a narrative criterion within an applicable State water quality standard, the permitting authority must establish effluent limits*."

The CWA requires point source dischargers to control the amount of conventional, non-conventional, and toxic pollutants that are discharged into the waters of the United States. The control of pollutants discharged is established through effluent limitations and other requirements in NPDES permits. There are two principal bases for effluent limitations in the Code of Federal Regulations: 40 CFR 122.44(a) requires that permits include applicable technology-based limitations and standards; and 40 CFR 122.44(d) requires that permits include WQBELs to attain and maintain applicable numeric and narrative water quality criteria to protect the beneficial uses of the receiving water where numeric water quality objectives have not been established. The Basin Plan at page IV-17.00, contains an implementation policy, "*Policy for Application of Water Quality Objectives*", that specifies that the Regional Water Board "*will, on a case-by-case basis, adopt numerical limitations in orders which will implement the narrative objectives*." This Policy complies with 40 CFR 122.44(d)(1). With respect to narrative objectives, the Regional Water Board must

Deleted: HYDROSCIENCE OPERATIONS, INC.

establish effluent limitations using one or more of three specified sources, including: (1) USEPA's published water quality criteria, (2) a proposed state criterion (i.e., water quality objective) or an explicit state policy interpreting its narrative water quality criteria (i.e., the Regional Water Board's "*Policy for Application of Water Quality Objectives*")(40 CFR 122.44(d)(1)(vi)(A), (B) or (C)), or (3) an indicator parameter.

The Basin Plan includes numeric site-specific water quality objectives and narrative objectives for toxicity, chemical constituents, discoloration, radionuclides, and tastes and odors. The narrative toxicity objective states: "*All waters shall be maintained free of toxic substances in concentrations that produce detrimental physiological responses in human, plant, animal, or aquatic life*." (Basin Plan at III-8.00.) The Basin Plan states that material and relevant information, including numeric criteria, and recommendations from other agencies and scientific literature will be utilized in evaluating compliance with the narrative toxicity objective. The narrative chemical constituents objective states that waters shall not contain chemical constituents in concentrations that adversely affect beneficial uses. At minimum, "…*water designated for use as domestic or municipal supply (MUN) shall not contain concentrations of chemical constituents in excess of the maximum contaminant levels (MCLs)" in Title 22 of CCR.* The Basin Plan further states that, to protect all beneficial uses, the Regional Water Board may apply limits more stringent than MCLs. The narrative tastes and odors objective states: *"Water shall not contain taste- or odor-producing substances in concentrations that impart undesirable tastes or odors to domestic or municipal water supplies or to fish flesh or other edible products of aquatic origin, or that cause nuisance, or otherwise adversely affect beneficial uses*."

A. Discharge Prohibitions

1. Surface Water Discharge Prohibitions

As stated in section I.G of Attachment D, Standard Provisions, this Order prohibits bypass from any portion of the treatment facility. Federal regulations, 40 CFR 122.41(m), define "bypass" as the intentional diversion of waste streams from any portion of a treatment facility. This section of the federal regulations, 40 CFR 122.41(m)(4), prohibits bypass unless it is unavoidable to prevent loss of life, personal injury, or severe property damage. In considering the Regional Water Board's prohibition of bypasses, the State Water Board adopted a precedential decision, Order No. WQO 2002-0015, which cites the federal regulations, 40 CFR 122.41(m), as allowing bypass only for essential maintenance to assure efficient operation, provided that the bypass does not cause violation of effluent and/or receiving water limitations.

2. Reclaimed Water Prohibitions

The Discharger uses tertiary treated wastewater to irrigate on-site landscaping for exterior decorative fountains. The State Water Board adopted Resolution No. 2009-0011 on 3 February 2009 adopting the Recycled Water Policy. The purpose of the Recycled Water Policy was to increase the use of recycled water from municipal wastewater sources that meets the definition in Water Code Section 13050(n), in a manner that implements state and federal water quality laws. When used in

Deleted: HYDROSCIENCE OPERATIONS, INC.

compliance with the Policy, Title 22, and all applicable state and federal water quality laws, the State Water Board found that recycled water is safe for the approved uses, and strongly supports recycled water as a safe alternative to potable water for such approved uses. On 7 July 2009, the State Water Board adopted Water Quality Order (WQO) No. 2009-0006-DWQ, General WDRs for Landscape Irrigation Uses of Municipal Recycled Water, the purpose of which was to streamline the regulatory process for uses of recycled water for landscape irrigation. In keeping with the intent of the Recycled Water Policy, this Order contains recycled water prohibitions consistent with WQO No. 2009-0006-DWQ. These requirements are necessary to ensure that the use of reclaimed water does not unreasonably affect present and anticipated beneficial uses of groundwater and surface water.

B. Technology-Based Effluent Limitations

1. Scope and Authority

Section 301(b) of the CWA and implementing USEPA permit regulations at 40 CFR 122.44 require that permits include conditions meeting applicable technology-based requirements at a minimum, and any more stringent effluent limitations necessary to meet applicable water quality standards. The discharge authorized by this Order must meet minimum federal technology-based requirements based on Secondary Treatment Standards at 40 CFR Part 133 and Best Professional Judgment (BPJ) in accordance with 40 CFR 125.3

Regulations promulgated in 40 CFR 125.3(a)(1) require technology-based effluent limitations for municipal Dischargers to be placed in NPDES permits based on Secondary Treatment Standards or Equivalent to Secondary Treatment Standards.

The federal Water Pollution Control Act Amendments of 1972 (PL 92-500) established the minimum performance requirements for POTWs [defined in section 304(d)(1)]. Section 301(b)(1)(B) of that Act requires that such treatment works must, as a minimum, meet effluent limitations based on secondary treatment as defined by the USEPA Administrator.

Based on this statutory requirement, USEPA developed secondary treatment regulations, which are specified in 40 CFR Part 133. These technology-based regulations apply to all municipal wastewater treatment plants and identify the minimum level of effluent quality attainable by secondary treatment in terms of 5-day biochemical oxygen demand (BOD_5), total suspended solids (TSS), and pH.

2. Applicable Technology-Based Effluent Limitations

a. BOD_5 and TSS. Federal regulations, 40 CFR Part 133, establish the minimum weekly and monthly average level of effluent quality attainable by secondary treatment for BOD_5 and TSS. Tertiary treatment is necessary to protect the beneficial uses of the receiving stream and the final effluent limitations for BOD_5 and TSS are based on the technical capability of the tertiary process. BOD_5 is a measure of the amount of oxygen used in the biochemical oxidation of organic

Deleted: HYDROSCIENCE OPERATIONS, INC.

matter. The secondary and tertiary treatment standards for BOD_5 and TSS are indicators of the effectiveness of the treatment processes. The principal design parameter for wastewater treatment plants is the daily BOD_5 and TSS loading rates and the corresponding removal rate of the system. In applying 40 CFR Part 133 for weekly and monthly average BOD_5 and TSS limitations, the application of tertiary treatment processes results in the ability to achieve lower levels for BOD_5 and TSS than the secondary standards currently prescribed; the 30-day average BOD_5 and TSS limitations have been revised to 10 mg/L, which is technically based on the capability of a tertiary system. In addition to the average weekly and average monthly effluent limitations, a daily maximum effluent limitation for BOD_5 and TSS is included in the Order to ensure that the treatment works are not organically overloaded and operate in accordance with design capabilities. In addition, 40 CFR 133.102, in describing the minimum level of effluent quality attainable by secondary treatment, states that the 30-day average percent removal shall not be less than 85 percent. If 85 percent removal of BOD_5 and TSS must be achieved by a secondary treatment plant, it must also be achieved by a tertiary (i.e., treatment beyond secondary level) treatment plant. This Order contains a limitation requiring an average of 85 percent removal of BOD_5 and TSS over each calendar month.

b. Flow. The Facility was designed to treat a peak flow capacity of 0.35 MGD. The Discharger is proposing to expand the Facility and increase the peak flow capacity to 0.7 MGD in the first phase of expansion and 0.875 MGD in the second phase of expansion. Order No. R5-2005-0032 required that the maximum daily influent flow shall not exceed 0.35 million gallons. Due to the fact that the configuration of the existing IMB process allows for flows higher than the design influent flow without impact to the treatment process, this Order revises the flow limitations to regulate the effluent flow rather than the influent flow. Until expansion of the Facility, this Order will require that the maximum daily effluent flow shall not exceed 0.35 MGD. Upon completion of the first phase of expansion of the Facility, this Order requires that the maximum daily effluent flow shall not exceed 0.7 MGD. Upon completion of the second phase of expansion of the Facility, this Order requires that the maximum daily effluent flow shall not exceed 0.875 MGD.

c. pH. The secondary treatment regulations at 40 CFR Part 133 also require that pH be maintained between 6.0 and 9.0 standard units.

Table F-3. Summary of Technology-based Effluent Limitations

Parameter	Units	Effluent Limitations				
		Average Monthly	Average Weekly	Maximum Daily	Instantaneous Minimum	Instantaneous Maximum
Flow	MGD	--	--	0.35[1]	--	--
		--	--	0.7[2]	--	--
		--	--	0.875[3]	--	--

Formatted: Keep with next

Formatted: Superscript

Deleted: [2]

Parameter	Units	Effluent Limitations				
		Average Monthly	Average Weekly	Maximum Daily	Instantaneous Minimum	Instantaneous Maximum
Biochemical Oxygen Demand (5-day @ 25°C)	mg/L	10	15	20	--	--
	lbs/day[1,4]	29	44	58	--	--
	lbs/day[2,5]	58	88	117	--	--
	lbs/day[3,6]	73	109	146	--	--
Total Suspended Solids	mg/L	10	15	20	--	--
	lbs/day[1,4]	29	44	58	--	--
	lbs/day[2,5]	58	88	117	--	--
	lbs/day[3,6]	73	109	146	--	--
pH	standard units	--	--	--	6.5	8.5

[1] Applicable until completion of the first phase of upgrades to the Facility.
[2] Applicable upon completion of the first phase of upgrades to the Facility and until completion of the second phase of upgrades to the Facility.
[3] Applicable upon completion of the second phase of upgrades to the Facility.
[4] Based on the maximum daily effluent flow of 0.35 MGD.
[5] Based on the maximum daily effluent flow of 0.7 MGD.
[6] Based on the maximum daily effluent flow of 0.875 MGD.

Deleted: HYDROSCIENCE OPERATIONS, INC.
Formatted: Keep with next
Deleted: 3
Formatted: Superscript
Deleted: 2,4
Deleted: 3
Formatted: Keep with next
Formatted: Superscript
Deleted: 2,4
Formatted: Indent: Left: 0 pt, Hanging: 17.55 pt, Tabs: 19.65 pt, Left
Deleted: 2
Deleted: 3
Deleted: 4

C. Water Quality-Based Effluent Limitations (WQBELs)

1. Scope and Authority

Section 301(b) of the CWA and 40 CFR 122.44(d) require that permits include limitations more stringent than applicable federal technology-based requirements where necessary to achieve applicable water quality standards. This Order contains requirements, expressed as a technology equivalence requirement, more stringent than secondary treatment requirements that are necessary to meet applicable water quality standards. The rationale for these requirements, which consist of tertiary treatment or equivalent requirements, is discussed in section IV.C.3.c.viii of this Fact Sheet.

40 CFR 122.44(d)(1)(i) mandates that permits include effluent limitations for all pollutants that are or may be discharged at levels that have the reasonable potential to cause or contribute to an exceedance of a water quality standard, including numeric and narrative objectives within a standard. Where reasonable potential has been established for a pollutant, but there is no numeric criterion or objective for the pollutant, WQBELs must be established using: (1) USEPA criteria guidance under CWA section 304(a), supplemented where necessary by other relevant information; (2) an indicator parameter for the pollutant of concern; or (3) a calculated numeric water quality criterion, such as a proposed state criterion or policy interpreting the state's narrative criterion, supplemented with other relevant information, as provided in 40 CFR 122.44(d)(1)(vi).

The process for determining reasonable potential and calculating WQBELs when necessary is intended to protect the designated uses of the receiving water as

Deleted: HYDROSCIENCE OPERATIONS, INC.

specified in the Basin Plan, and achieve applicable water quality objectives and criteria that are contained in other state plans and policies, or any applicable water quality criteria contained in the CTR and NTR.

2. Applicable Beneficial Uses and Water Quality Criteria and Objectives

The Basin Plan designates beneficial uses, establishes water quality objectives, and contains implementation programs and policies to achieve those objectives for all waters addressed through the plan. In addition, the Basin Plan implements State Water Board Resolution No. 88-63, which established state policy that all waters, with certain exceptions, should be considered suitable or potentially suitable for municipal or domestic supply.

The Basin Plan on page II-1.00 states: "*Protection and enhancement of existing and potential beneficial uses are primary goals of water quality planning…*" and with respect to disposal of wastewaters states that "*...disposal of wastewaters is [not] a prohibited use of waters of the State; it is merely a use which cannot be satisfied to the detriment of beneficial uses.*"

The federal CWA section 101(a)(2), states: "*it is the national goal that wherever attainable, an interim goal of water quality which provides for the protection and propagation of fish, shellfish, and wildlife, and for recreation in and on the water be achieved by July 1, 1983.*" Federal Regulations, developed to implement the requirements of the CWA, create a rebuttable presumption that all waters be designated as fishable and swimmable. Federal Regulations, 40 CFR sections 131.2 and 131.10, require that all waters of the State regulated to protect the beneficial uses of public water supply, protection and propagation of fish, shell fish and wildlife, recreation in and on the water, agricultural, industrial and other purposes including navigation. Section 131.3(e), 40 CFR, defines existing beneficial uses as those uses actually attained after 28 November 1975, whether or not they are included in the water quality standards. Federal Regulation, 40 CFR section 131.10 requires that uses be obtained by implementing effluent limitations, requires that all downstream uses be protected and states that in no case shall a state adopt waste transport or waste assimilation as a beneficial use for any waters of the United States.

a. Receiving Water and Beneficial Uses. Treated municipal wastewater is discharge to Orchard Creek, tributary to Auburn Ravine, East Side Canal, Cross Canal, and the Sacramento River. Order No. R5-2005-0032 indicated that the discharge was to an unnamed tributary to Orchard Creek. However, the Discharger has stated that the discharge is directly to Orchard Creek, as shown on the map in Attachment B. Observation of the outfall during the permit site visit in April 2009 verified that the discharge is directly to Orchard Creek.

The Basin Plan at II-2.00 states that the beneficial uses of any specifically identified water body generally apply to its tributary streams. The Basin Plan does not specifically identify beneficial uses for Orchard Creek, but does identify present and potential uses for the Sacramento River from the Colusa Basin Drain

Deleted: HYDROSCIENCE OPERATIONS, INC.

to the "I" Street Bridge, to which Orchard Creek, via Auburn Ravine, East Side Canal, and Cross Canal, is tributary. Thus, beneficial uses applicable to Orchard Creek are as follows:

Table F-4. Basin Plan Beneficial Uses

Discharge Point	Receiving Water Name	Beneficial Use(s)
001	Orchard Creek	Existing: Municipal and domestic supply (MUN); agricultural supply, including irrigation (AGR); water contact recreation, including canoeing and rafting (REC-1); non-contact water recreation (REC-2); warm freshwater habitat (WARM); cold freshwater habitat (COLD); migration of aquatic organisms, warm and cold (MIGR); spawning, reproduction, and/or early development, warm and cold (SPWN); wildlife habitat (WILD); and navigation (NAV).

In reviewing whether the existing and/or potential uses of the Sacramento River from the Colusa Basin Drain to the "I" Street Bridge apply to Orchard Creek, the Regional Water Board has considered the following facts:

i. Municipal and Domestic Supply and Agricultural Irrigation

The Regional Water Board is required to apply the beneficial uses of municipal and domestic supply to Orchard Creek based on State Water Board Resolution No. 88-63 which was incorporated in the Basin Plan pursuant to Regional Water Board Resolution 89-056. In addition, the State Water Board has issued water rights for irrigation uses (including stock watering) to existing users along downstream waters. Riparian rights, for landowners along streams and rivers, may not be recorded with the State Water Board, which may use the water for domestic and irrigation purposes. Since Orchard Creek is an ephemeral stream, Orchard Creek likely provides groundwater recharge during periods of low flow. The groundwater is a source of drinking water and is also designated as agricultural supply. In addition to the existing water uses, growth in the area, downstream of the discharge is expected to continue, which presents a potential for increased domestic and agricultural uses of the water in Orchard Creek, Auburn Ravine, East Side Canal, Cross Canal, and the Sacramento River.

ii. Water Contact and Non-Contact Recreation and Esthetic Enjoyment

The Facility discharges to Orchard Creek, Auburn Ravine, East Side Canal, Cross Canal, and the Sacramento River. The Regional Water Board finds that there is ready public access to Orchard Creek, Auburn Ravine, East Side Canal, Cross Canal, and the Sacramento River. Exclusion or restriction of public use is unrealistic

Deleted: HYDROSCIENCE OPERATIONS, INC.

iii. Groundwater Recharge

In areas where groundwater elevations are below the stream bottom, water from the stream will percolate to groundwater. Since Orchard Creek is at times dry, it is reasonable to assume that the stream water is lost by evaporation, flow downstream and percolation to groundwater providing a source of municipal and irrigation water supply.

iv. Freshwater Replenishment

When water is present in Orchard Creek, there is hydraulic continuity between Orchard Creek, Auburn Ravine, East Side Canal, Cross Canal, and the Sacramento River. During periods of hydraulic continuity, Orchard Creek adds to the water quantity and may impact the quality of water flowing downstream in the Sacramento River.

v. Warm and Cold Freshwater Habitats, Warm and Cold Spawning Habitats, and Wildlife Habitat

Orchard Creek is tributary to Auburn Ravine, East Side Canal, Cross Canal, and the Sacramento River. The California Department of Fish and Game (DFG) has verified the presence of both salmon and steelhead (anadromous species) in Auburn Ravine, downstream of the discharge from the Facility. The Basin Plan (Table II-1) designates the Sacramento River, from the Colusa Basin Drain to the "I" Street Bridge, as being both a cold and warm freshwater habitat. The cold water habitat designation necessitates that the in-stream dissolved oxygen concentration be maintained at, or above, 7.0 mg/L. Pursuant to the Basin Plan tributary rule, the cold and warm water habitat designation is applied to Orchard Creek.

Upon review of the flow conditions, habitat values, and beneficial uses of the Orchard Creek, and the facts described above, the Regional Water Board finds that the beneficial uses identified in the Basin Plan for the Sacramento River are applicable to Orchard Creek.

b. Effluent and Ambient Background Data. The RPA, as described in section IV.C.3 of this Fact Sheet, was based on data from January 2006 through December 2008, which includes effluent and ambient background data submitted in monthly SMRs and semi-annual priority pollutant monitoring.

c. Hardness-Dependent CTR Metals Criteria

The *California Toxics Rule* and the *National Toxics Rule* contain water quality criteria for seven metals that vary as a function of hardness. The lower the hardness the lower the water quality criteria. The metals with hardness-dependent criteria include cadmium, copper, chromium III, lead, nickel, silver, and zinc.

Deleted: HYDROSCIENCE OPERATIONS, INC.

This Order has established the criteria for hardness-dependent metals based on the reasonable worst-case ambient hardness as required by the SIP[1], the CTR[2] and State Water Board Order No. WQO 2008-0008 (City of Davis). The SIP and the CTR require the use of "receiving water" or "actual ambient" hardness, respectively, to determine effluent limitations for these metals. (SIP, § 1.2; 40 CFR § 131.38(c)(4), Table 4, note 4.) The CTR does not define whether the term "ambient," as applied in the regulations, necessarily requires the consideration of upstream as opposed to downstream hardness conditions. In some cases, the hardness of effluent discharges changes the hardness of the ambient receiving water. Therefore, where reliable, representative data are available, the hardness value for calculating criteria can be the downstream receiving water hardness, after mixing with the effluent (Order WQO 2008-0008, p. 11). The Regional Water Board thus has considerable discretion in determining ambient hardness (Id., p.10.).

The hardness values must also be protective under all flow conditions (Id., pp. 10-11). As discussed below, scientific literature provides a reliable method for calculating protective hardness-dependent CTR criteria, considering all discharge conditions. This methodology produces criteria that ensure these metals do not cause receiving water toxicity, while avoiding criteria that are unnecessarily stringent.

i. Reasonable Potential Analysis

The SIP in Section 1.3 states, "*The RWQCB shall…determine whether a discharge may: (1) cause, (2) have a reasonable potential to cause, or (3) contribute to an excursion above any applicable priority pollutant criterion or objective*." Section 1.3 provides a step-by-step procedure for conducting the RPA. The procedure requires the comparison of the maximum effluent concentration (MEC) and maximum receiving water background concentration to the applicable criterion that has been properly adjusted for hardness. Unless otherwise noted, for the hardness-dependent CTR metals criteria the following procedures were followed for properly adjusting the criterion for hardness when conducting the RPA.

(a) For comparing the MEC to the applicable criterion, in accordance with the SIP, CTR, and Davis Order, the reasonable worst-case downstream hardness was used to adjust the criterion. In this evaluation the portion of the receiving water affected by the discharge is analyzed. For hardness-dependent criteria, the hardness of the effluent has an impact on the determination of the applicable criterion in areas in the receiving water affected by the discharge. Therefore, for this situation it is necessary to

[1] The SIP does not address how to determine the hardness for application to the equations for the protection of aquatic life when using hardness-dependent metals criteria. It simply states, in Section 1.2, that the criteria shall be properly adjusted for hardness using the hardness of the receiving water.

[2] The CTR requires that, for waters with a hardness of 400 mg/L (as $CaCO_3$), or less, the actual ambient hardness of the surface water must be used. It further requires that the hardness values used must be consistent with the design discharge conditions for design flows and mixing zones.

Deleted: HYDROSCIENCE OPERATIONS, INC.

consider the hardness of the effluent in determining the applicable hardness to adjust the criterion. The procedures for determining the applicable criterion after proper adjustment using the reasonable worst-case downstream hardness is outlined in subsection ii. below.

(b) For comparing the maximum receiving water background concentration to the applicable criterion, in accordance with the SIP, CTR, and Davis Order, the reasonable worst-case upstream hardness was used to adjust the criterion. In this evaluation the area outside the influence of the discharge is analyzed. For this situation, the discharge does not impact the upstream hardness. Therefore, the effect of the effluent hardness was not included in this evaluation.

The upstream receiving water hardness in Orchard Creek ranged from 48 mg/L to 88 mg/L, based on six samples from January 2006 to December 2008. Thus, a minimum upstream receiving water hardness of 48 mg/L (as $CaCO_3$) represents the reasonable worst-case upstream hardness and was used to adjust the criterion when comparing the maximum receiving water background concentration to the criterion. For comparing the MEC to the applicable criterion, in accordance with the SIP, CTR, and Davis Order, the reasonable worst-case downstream hardness was used to adjust the criterion. The procedures for determining the applicable criterion after proper adjustment using the reasonable worst-case downstream hardness is outlined in subsection ii. below.

ii. Effluent Concentration Allowance (ECA) Calculation

A 2006 Study[1] developed procedures for calculating the effluent concentration allowance (ECA)[2] for CTR hardness-dependent metals. The 2006 Study demonstrated that it is necessary to evaluate all discharge conditions (e.g. high and low flow conditions) and the hardness and metals concentrations of the effluent and receiving water when determining the appropriate ECA for these hardness-dependent metals. Simply using the lowest recorded upstream receiving water hardness to calculate the ECA may result in over or under protective WQBELs.

The equation describing the total recoverable regulatory criterion, as established in the CTR, is as follows:

$$\text{CTR Criterion} = \text{WER} \times (e^{m[\ln(H)]+b}) \qquad \text{(Equation 1)}$$

Where:

[1] Emerick, R.W.; Borroum, Y.; & Pedri, J.E., 2006. California and National Toxics Rule Implementation and Development of Protective Hardness Based Metal Effluent Limitations. WEFTEC, Chicago, Ill.

[2] The ECA is defined in Appendix 1 of the SIP (page Apendix 1-2). The ECA is used to calculate water quality-based effluent limitations in accordance with Section 1.4 of the SIP

Deleted: HYDROSCIENCE OPERATIONS, INC.

H = hardness (as $CaCO_3$)
WER = water-effect ratio
m, b = metal- and criterion-specific constants

In accordance with the CTR, the default value for the WER is 1. A WER study must be conducted to use a value other than 1. The constants "m" and "b" are specific to both the metal under consideration, and the type of total recoverable criterion (i.e., acute or chronic). The metal-specific values for these constants are provided in the CTR at paragraph (b)(2), Table 1.

The equation for the ECA is defined in Section 1.4, Step 2, of the SIP and is as follows:

ECA = C (when C ≤ B)[1] (Equation 2)

Where

C = the priority pollutant criterion/objective, adjusted for hardness (see Equation 1, above)

B = the ambient background concentration

The 2006 Study demonstrated that the relationship between hardness and the calculated criteria is the same for some metals, so the same procedure for calculating the ECA may be used for these metals. The same procedure can be used for chronic cadmium, chromium III, copper, nickel, and zinc. These metals are hereinafter referred to as "Concave Down Metals". "Concave Down" refers to the shape of the curve represented by the relationship between hardness and the CTR criteria in Equation 1. Another similar procedure can be used for determining the ECA for acute cadmium, lead, and acute silver, which are referred to hereafter as "Concave Up Metals".

ECA for Concave Down Metals – For Concave Down Metals (i.e., chronic cadmium, chromium III, copper, nickel, and zinc) the 2006 Study demonstrates that when the effluent is in compliance with the CTR criteria and the upstream receiving water is in compliance with the CTR criteria, any mixture of the effluent and receiving water will always be in compliance with the CTR criteria. Therefore, based on any observed ambient background hardness, no receiving water assimilative capacity for metals (i.e., ambient background metals concentrations are at their respective CTR criterion) and the minimum effluent hardness, the ECA calculated using Equation 1 with a hardness equivalent to the minimum effluent hardness is protective under all discharge conditions (i.e., high and low dilution conditions and under all mixtures of effluent and receiving water as the effluent mixes with the receiving water). This is applicable whether the effluent hardness is less than or greater than the ambient background receiving water hardness.

[1] The 2006 Study assumes the ambient background metals concentration is equal to the CTR criterion (i.e. C ≤ B)

Deleted: HYDROSCIENCE OPERATIONS, INC.

The effluent hardness ranged from 12 mg/L to 49 mg/L (as $CaCO_3$), based on 43 samples from January 2006 to December 2008. The upstream receiving water hardness varied from 48 mg/L to 88 mg/L (as $CaCO_3$), based on six samples from January 2006 to December 2008. Using a hardness of 12 mg/L (as $CaCO_3$) to calculate the ECA for all Concave Down Metals will result in WQBELs that are protective under all potential effluent/receiving water mixing scenarios and under all known hardness conditions, as demonstrated in the example using zinc shown in Table F-5, below. This example assumes the following conservative conditions for the upstream receiving water:

- Upstream receiving water always at the lowest observed upstream receiving water hardness (i.e., 48 mg/L as $CaCO_3$)
- Upstream receiving water zinc concentration always at the CTR criteria (i.e., no assimilative capacity). Based on available data, the receiving water never exceeded the CTR criteria for any metal with hardness-dependent criteria.

As demonstrated in Table F-5, using a hardness of 12 mg/L (as $CaCO_3$) to calculate the ECA for Concave Down Metals ensures the discharge is protective under all discharge and mixing conditions. In this example, the effluent is in compliance with the CTR criteria and any mixture of the effluent and receiving water is in compliance with the CTR criteria. Therefore, in this Order the ECA for all Concave Down Metals has been calculated using Equation 1 with a hardness of 12 mg/L (as $CaCO_3$).

Deleted: HYDROSCIENCE OPERATIONS, INC.

Table F-5. Zinc ECA Evaluation

Minimum Observed Effluent Hardness	**12 mg/L (as $CaCO_3$)**
Minimum Observed Upstream Receiving Water Hardness	**48 mg/L (as $CaCO_3$)**
Maximum Assumed Upstream Receiving Water Zinc Concentration	**64 µg/L[1]**
Zinc $ECA_{chronic}$[2]	**20 µg/L**

Effluent Fraction	Mixed Downstream Ambient Concentration		
	Hardness[3] (mg/L) (as $CaCO_3$)	**CTR Criteria[4] (µg/L)**	**Zinc[5] (µg/L)**
1%	48	64	64
5%	46	62	62
15%	43	58	58
25%	39	54	53
50%	30	43	42
75%	21	32	31
100%	12	20	20

1 Maximum assumed upstream receiving water zinc concentration calculated using Equation 1 for chronic criterion at a hardness of **48 mg/L (as $CaCO_3$)**.

2 ECA calculated using Equation 1 for zinc criterion at a hardness of **12 mg/L (as $CaCO_3$)**.

3 Mixed downstream ambient hardness is the mixture of the receiving water and effluent hardness at the applicable effluent fraction.

4 Mixed downstream ambient criteria are the chronic criteria calculated using Equation 1 at the mixed hardness.

5 Mixed downstream ambient zinc concentration is the mixture of the receiving water and effluent zinc concentrations at the applicable effluent fraction.

ECA for Concave Up Metals – For Concave Up Metals (i.e., acute cadmium, lead, and acute silver), the 2006 Study demonstrates that due to a different relationship between hardness and the metals criteria, the effluent and upstream receiving water can be in compliance with the CTR criteria, but the resulting mixture may be out of compliance. Therefore, the 2006 Study provides a mathematical approach to calculate the ECA to ensure that any mixture of effluent and receiving water is in compliance with the CTR criteria (see Equation 3, below). The ECA, as calculated using Equation 3, is based on the reasonable worst-case ambient background hardness, no receiving water assimilative capacity for metals (i.e., ambient background metals concentrations are at their respective CTR criterion), and the minimum observed effluent hardness. The reasonable worst-case ambient background hardness depends on whether the effluent hardness is greater than or less than the upstream receiving water hardness. There are circumstances where the conservative ambient background hardness assumption is to assume that the upstream receiving water is at the highest observed hardness concentration. The conservative upstream receiving water condition as used in the Equation 3 below is defined by the term H_{rw}.

Deleted: HYDROSCIENCE OPERATIONS, INC.

$$ECA = \left(\frac{m(H_e - H_{rw})(e^{m\{\ln(H_{rw})\}+b})}{H_{rw}} \right) + e^{m\{\ln(H_{rw})\}+b} \qquad \text{(Equation 3)}$$

m, b = criterion specific constants (from CTR)

H_e = minimum observed effluent hardness

H_{rw} = minimum observed upstream receiving water hardness when the minimum effluent hardness is always greater than observed upstream receiving water hardness ($H_{rw} < H_e$)

-or-

maximum observed upstream receiving water hardness when the minimum effluent hardness is always less than observed upstream receiving water hardness ($H_{rw} > H_e$)[1]

A similar example as was done for the Concave Down Metals is shown for lead, a Concave Up Metal, in Table F-6, below. As previously mentioned, the minimum effluent hardness is 12 mg/L (as $CaCO_3$), while the upstream receiving water hardness ranged from 48 mg/L to 88 mg/L (as $CaCO_3$). In this case, the minimum effluent concentration is less than the range of observed upstream receiving water hardness concentrations. Thus, the ECA was calculated (Equation 3) based on the minimum observed upstream receiving water hardness, no receiving water assimilative capacity for lead (i.e., ambient background lead concentration is at the CTR chronic criterion) and the minimum effluent hardness.

Using Equation 3 to calculate the ECA for all Concave Up Metals will result in WQBELs that are protective under all potential effluent/receiving water mixing scenarios and under all known hardness conditions, as demonstrated in Table F-6, for lead. In this example, the effluent is in compliance with the CTR criteria and any mixture of the effluent and receiving water is in compliance with the CTR criteria. Use of a lower ECA (e.g., calculated based solely on the lowest upstream receiving water or effluent hardness) is also protective, but would lead to unreasonably stringent effluent limits considering the known conditions. Therefore, Equation 3 has been used to calculate the ECA for all Concave Up Metals in this Order.

[1] When the minimum effluent hardness falls within the range of observed receiving water hardness concentrations, Equation 3 is used to calculate two ECAs, one based on the minimum observed upstream receiving water hardness and one based on the maximum observed upstream receiving water hardness. The minimum of the two calculated ECAs represents the ECA that ensures any mixture of effluent and receiving water is in compliance with the CTR criteria.

Deleted: HYDROSCIENCE OPERATIONS, INC.

Table F-6. Lead ECA Evaluation

Minimum Observed Effluent Hardness	**12 mg/L (as $CaCO_3$)**
Minimum Observed Upstream Receiving Water Hardness	**48 mg/L (as $CaCO_3$)**
Maximum Assumed Upstream Receiving Water Lead Concentration	**1.2 µg/L[1]**
Lead $ECA_{chronic}$[2]	**0.06 µg/L**

Effluent Fraction	Mixed Downstream Ambient Concentration		
	Hardness[3] (mg/L) (as $CaCO_3$)	CTR Criteria[4] (µg/L)	Lead[5] (µg/L)
1%	48	1.2	1.2
5%	46	1.2	1.2
15%	43	1.1	1.1
25%	39	1.0	1.0
50%	30	0.69	0.65
75%	21	0.44	0.35
100%	12	0.21	0.06

1 Minimum assumed upstream receiving water lead concentration calculated using Equation 1 for chronic criterion at a hardness of **48 mg/L (as $CaCO_3$)**.

2 ECA calculated using Equation 3 for chronic criteria.

3 Mixed downstream ambient hardness is the mixture of the receiving water and effluent hardness at the applicable effluent fraction.

4 Mixed downstream ambient criteria are the chronic criteria calculated using Equation 1 at the mixed hardness.

5 Mixed downstream ambient lead concentration is the mixture of the receiving water and effluent lead concentrations at the applicable effluent fraction.

d. Water Effect Ratio (WER). The Discharger submitted a *Copper Water-Effect Ratio Study for Orchard Creek at the Thunder Valley WWTP Discharge Outfall* in November 2007. The Discharger's study followed USEPA's 2001 *Streamlined Water-Effect Ratio Procedure for Discharges of Copper* (EPA 822-R-01-005). Following the streamlined procedure, two separate sets of samples were evaluated on 4 June 2007 and 11 July 2007 to assess ambient conditions and to calculate a freshwater copper WER using the primary test species, *Ceriodaphnia dubia*. Consistent with the streamlined procedure, the Discharger used the geometric mean of the two sample WERs to calculate final site-specific WERs for dissolved and total copper. Based on the results of the study, the Discharger concluded that a dissolved WER for copper of 24.9 and a total WER for copper of 24.5, based on effluent data to represent low-flow, zero-dilution discharge conditions, were applicable to the discharge to Orchard Creek. Based on review of the Discharger's study, the Regional Water Board concludes that the Discharger's proposed WERs are applicable to the discharge to Orchard Creek.

Effluent limitations for metals must be expressed as total recoverable concentrations. Therefore, the criteria for copper used for the RPA must be total recoverable criteria and the proposed total recoverable WER of 24.5 was used to

Deleted: HYDROSCIENCE OPERATIONS, INC.

calculate aquatic life criteria for copper. See section IV.C.3.b.i of the Fact Sheet (Attachment F) for a discussion of the RPA for copper.

e. **Conversion Factors.** The CTR contains aquatic life criteria for arsenic, cadmium, chromium III, chromium VI, copper, lead, nickel, silver, and zinc which are presented in dissolved concentrations. USEPA recommends conversion factors to translate dissolved concentrations to total concentrations. The default USEPA conversion factors contained in Appendix 3 of the SIP were used to convert the applicable dissolved criteria to total recoverable criteria.

f. **Assimilative Capacity/Mixing Zone**

Based on available information and on the Discharger's application, Orchard Creek, absent the discharge, is an ephemeral stream. The ephemeral nature of Orchard Creek means that the designated beneficial uses must be protected, but that no credit for receiving water dilution is available. Although the discharge, at times, maintains the aquatic habitat, constituents may not be discharged in concentrations that may cause harm to aquatic life. Both conditions may exist within a short time span, where Orchard Creek would be dry without the discharge and periods when sufficient background flows provide hydraulic continuity with the Sacramento River. Dry conditions occur primarily in the summer months, but dry conditions may also occur throughout the year, particularly in low rainfall years. The lack of dilution results in more stringent effluent limitations to protect beneficial uses. Significant dilution may occur during and immediately following high rainfall events.

3. **Determining the Need for WQBELs**

a. The Regional Water Board conducted the RPA in accordance with section 1.3 of the SIP. Although the SIP applies directly to the control of CTR priority pollutants, the State Water Board has held that the Regional Water Board may use the SIP as guidance for water quality-based toxics control.[1] The SIP states in the introduction "*The goal of this Policy is to establish a standardized approach for permitting discharges of toxic pollutants to non-ocean surface waters in a manner that promotes statewide consistency*." Therefore, in this Order the RPA procedures from the SIP were used to evaluate reasonable potential for both CTR and non-CTR constituents based on information submitted as part of the application, in studies, and as directed by monitoring and reporting programs.

b. **Constituents with No Reasonable Potential.** WQBELs are not included in this Order for constituents that do not demonstrate reasonable potential; however, monitoring for those pollutants is established in this Order as required by the SIP. If the results of effluent monitoring demonstrate reasonable potential, this Order may be reopened and modified by adding an appropriate effluent limitation.

[1] See Order WQO 2001-16 (Napa) and Order WQO 2004-0013 (Yuba City).

Deleted: HYDROSCIENCE OPERATIONS, INC.

i. Copper

(a) WQO. The CTR includes hardness dependent criteria for the protection of freshwater aquatic life for copper. Section 1.3 of the SIP contains the requirements for conducting the RPA for CTR constituents. Step 1 of the RPA requires that the CTR criteria be adjusted for hardness, as applicable. In this case, the minimum observed effluent hardness was used to adjust the CTR criteria for copper when comparing the MEC to the criteria and the minimum observed receiving water hardness was used when comparing the maximum background receiving water copper concentrations to the criteria. Using the default conversion factors, reasonable worst-case measured hardness of the effluent, and site-specific WER of 24.5 as described in section VI.C.2.d of this Fact Sheet, the applicable acute (1-hour average) and chronic (4-day average) criteria for the effluent are 37 µg/L and 47 µg/L, respectively, as total recoverable. Using the default conversion factors and reasonable worst-case measured hardness of the receiving water, the applicable acute (1-hour average) and chronic (4-day average) criteria for the receiving water are 5.0 µg/L and 7.0 µg/L, respectively, as total recoverable.

(b) RPA Results. The maximum effluent concentration (MEC) for copper was 16 µg/L (as total recoverable). The maximum observed upstream receiving water concentration was 3.6 µg/L (as total recoverable). Therefore, copper in the discharge does not have a reasonable potential to cause or contribute to an in-stream excursion above the CTR criterion for the protection of freshwater aquatic life.

ii. Settleable Solids

(a) WQO. For inland surface waters, the Basin Plan states that "[w]*ater shall not contain substances in concentrations that result in the deposition of material that causes nuisance or adversely affects beneficial uses.*"

(b) RPA Results. Order No. R5-2005-0032 established an AMEL of 0.1 ml/L and an MDEL of 0.2 ml/L for settleable solids. Settleable solids were not detected in the effluent based on 465 sampling events. Therefore, the discharge of tertiary treated wastewater from the Facility does not have a reasonable potential to cause or contribute to an excursion above the Basin Plan's narrative objective for settleable solids and effluent limitations for settleable solids are not included in this Order.

c. Constituents with Reasonable Potential. The Regional Water Board finds that the discharge has a reasonable potential to cause or contribute to an in-stream excursion above a water quality standard for aluminum, ammonia, cadmium, chlorine residual, delta-BHC, electrical conductivity, endrin aldehyde, iron, lead, manganese, mercury, pathogens, pH, and zinc. WQBELs for these constituents are included in this Order. A summary of the RPA is provided in Attachment G, and a detailed discussion of the RPA for each constituent is provided below.

Deleted: HYDROSCIENCE OPERATIONS, INC.

i. Aluminum

(a) WQO. USEPA developed National Recommended Ambient Water Quality Criteria (NAWQC) for protection of freshwater aquatic life for aluminum. The recommended 4-day average (chronic) and 1-hour average (acute) criteria for aluminum are 87 µg/L and 750 µg/L, respectively, for waters with a pH of 6.5 to 9.0. USEPA recommends that the ambient criteria are protective of the aquatic beneficial uses of receiving waters in lieu of site-specific criteria. The most stringent of these criteria, the chronic criterion of 87 ug/L, is based on studies conducted on waters with low pH (6.5 to 6.8 pH units) and hardness (<10 mg/L as $CaCO_3$). The upstream receiving water pH ranged from 6.41 to 8.2. The upstream receiving water hardness ranged from 48 mg/L to 88 mg/L. The effluent hardness, which represents the downstream hardness during critical low flow periods, ranged from 12 mg/L to 49 mg/L. The low pH values observed in the receiving water and the low hardness observed in the effluent is supportive of the applicability of the NAWQC chronic criteria for aluminum, according to USEPA's development document.

(b) RPA Results. The maximum effluent concentration (MEC) for aluminum was 71µg/L while the maximum observed upstream receiving water concentration was 550 µg/L. Because the upstream receiving water aluminum concentration exceeds the chronic criterion, and aluminum was detected in the effluent, aluminum in the discharge has a reasonable potential to cause or contribute to an in-stream excursion above the chronic criterion.

Deleted: 67

(c) WQBELs. This Order contains a final average monthly effluent limitation (AMEL) and maximum daily effluent limitation (MDEL) for aluminum of 76 µg/L and 128 µg/L, respectively, based on the NAWQC for protection of freshwater aquatic life.

(d) Plant Performance and Attainability. Analysis of the effluent data shows that the MEC of 71µg/L is less than the applicable WQBEL. The Regional Water Board concludes, therefore, that immediate compliance with these effluent limitations is feasible.

Deleted: 67

ii. Ammonia

(a) WQO. The NAWQC for the protection of freshwater aquatic life for total ammonia, recommends acute (1-hour average; criteria maximum concentration or CMC) standards based on pH and chronic (30-day average; criteria continuous concentration or CCC) standards based on pH and temperature. USEPA also recommends that no 4-day average concentration should exceed 2.5 times the 30-day CCC. USEPA found that as pH increased, both the acute and chronic toxicity of ammonia increased. Salmonids were more sensitive to acute toxicity effects than other species. However, while the acute toxicity of ammonia was not

Deleted: HYDROSCIENCE OPERATIONS, INC.

influenced by temperature, it was found that invertebrates and young fish experienced increasing chronic toxicity effects with increasing temperature. Because Orchard Creek has a beneficial use of cold freshwater habitat and the presence of salmonids and early fish life stages in Auburn Ravine downstream of the discharge is well-documented, the recommended criteria for waters where salmonids and early life stages are present were used.

The maximum permitted effluent pH is 8.5, as the Basin Plan objective for pH in the receiving stream is the range of 6.5 to 8.5. In order to protect against the worst-case short-term exposure of an organism, a pH value of 8.5 was used to derive the acute criterion. The resulting acute criterion is 2.14 mg/L.

Since the receiving water is, at times, an effluent dominated waterbody, effluent temperature and pH data from the Discharger's monthly monitoring reports from January 2006 through December 2008 were used to develop the chronic criteria. Using effluent data, the 30-day CCC was calculated for each day when temperature and pH were measured. The resulting lowest 30-day CCC is 1.24 mg/L (as N). The 4-day average concentration is derived in accordance with the USEPA criterion as 2.5 times the 30-day CCC. Based on the 30-day CCC of 1.24 mg/L (as N), the 4-day average concentration that should not be exceeded is 2.33 mg/L (as N).

(b) RPA Results. Untreated domestic wastewater contains ammonia. Nitrification is a biological process that converts ammonia to nitrite and nitrite to nitrate. Denitrification is a process that converts nitrate to nitrite or nitric oxide and then to nitrous oxide or nitrogen gas, which is then released to the atmosphere. The Discharger currently uses nitrification to remove ammonia from the waste stream. Inadequate or incomplete nitrification may result in the discharge of ammonia to the receiving stream. Ammonia is known to cause toxicity to aquatic organisms in surface waters. Discharges of ammonia would violate the Basin Plan narrative toxicity objective. The MEC for ammonia was 1.2 mg/L while the maximum observed upstream receiving water concentration was 0.21 mg/L. Because municipal wastewater contains ammonia and inadequate or incomplete nitrification may result in the discharge of ammonia to the receiving stream, ammonia in the discharge has a reasonable potential to cause or contribute to an in-stream excursion above the NAWQC.

(c) WQBELs. The Regional Water Board calculates WQBELs in accordance with SIP procedures for non-CTR constituents, and ammonia is a non-CTR constituent. The SIP procedure assumes a 4-day averaging period for calculating the long-term average discharge condition (LTA). However, USEPA recommends modifying the procedure for calculating permit limits

Deleted: HYDROSCIENCE OPERATIONS, INC.

for ammonia using a 30-day averaging period for the calculation of the LTA corresponding to the 30-day CCC. Therefore, while the LTAs corresponding to the acute and 4-day chronic criteria were calculated according to SIP procedures, the LTA corresponding to the 30-day CCC was calculated assuming a 30-day averaging period. The lowest LTA representing the acute, 4-day CCC, and 30-day CCC is then selected for deriving the AMEL and the MDEL. The remainder of the WQBEL calculation for ammonia was performed according to the SIP procedures. This Order contains a final AMEL and MDEL for ammonia as shown in Table F-8 of this Fact Sheet, based on the NAWQC for the protection of aquatic life.

(d) Plant Performance and Attainability. Analysis of the effluent data shows that concentrations of ammonia are consistently less than the applicable WQBELs. The Regional Water Board concludes, therefore, that immediate compliance with these effluent limitations is feasible.

iii. Cadmium

(a) WQO. The CTR includes hardness dependent criteria for the protection of freshwater aquatic life for cadmium. Section 1.3 of the SIP contains requirements for conducting the RPA for CTR constituents. Step 1 of the RPA requires that CTR criteria be adjusted for hardness, as applicable. Cadmium behaves as both a Concave Down parameter (i.e., for comparison with the chronic criterion) and as a Concave Up parameter (i.e., for comparison with the acute criterion). Therefore, the minimum observed effluent hardness was used to adjust the chronic CTR criterion when comparing the MEC to the chronic criterion. The maximum observed upstream receiving water hardness, no receiving water assimilative capacity for cadmium (i.e., ambient background cadmium concentration is at the CTR acute criterion), and the minimum effluent hardness were used to adjust the acute CTR criterion when comparing the MEC to the acute criterion. The minimum observed receiving water hardness was used when comparing the maximum background receiving water cadmium concentration to the acute and chronic criteria. Using the default conversion factors and reasonable worst-case measured hardness of the effluent, the applicable chronic (4-day average) criterion for the effluent is 0.47 µg/L. Using the maximum observed upstream receiving water hardness, no receiving water assimilative capacity for cadmium (i.e., ambient background cadmium concentration is at the CTR chronic criterion) and the minimum effluent hardness, the applicable acute (1-hour average) criterion for the effluent is 0.10 µg/L. Using the default conversion factors and reasonable worst-case measured hardness of the receiving water, the applicable acute (1-hour average) and chronic (4-day average) criteria for the receiving water are 2.0 µg/L and 1.4 µg/L, respectively.

Deleted: HYDROSCIENCE OPERATIONS, INC.

(b) RPA Results. The MEC for cadmium was 0.24 µg/L (as total recoverable), while cadmium was not detected in the receiving water. Because the MEC exceeds the acute criterion for the effluent of 0.10 µg/L, cadmium in the discharge has a reasonable potential to cause or contribute to an in-stream excursion above the acute CTR criterion for the protection of freshwater aquatic life.

(c) WQBELs. As described in section IV.C.2.c of the Fact Sheet, the $ECA_{chronic}$ was determined using the reasonable worst-case measured hardness of the effluent and the ECA_{acute} was determined assuming the maximum observed upstream receiving water hardness, no receiving water assimilative capacity for cadmium (i.e., ambient background cadmium concentration is at the CTR chronic criterion), and the minimum effluent hardness, which is protective under all discharge and mixing conditions. This results in an $ECA_{chronic}$ and ECA_{acute} for cadmium of 0.47 µg/L and 0.10 µg/L, respectively. Using the procedures for calculating WQBELs in section 1.4 of the SIP, this Order contains a final AMEL and MDEL for cadmium as shown in Table F-8 of this Fact Sheet, based on the CTR criterion for the protection of freshwater aquatic life.

(d) Plant Performance and Attainability. Analysis of the effluent data shows that the MEC of 0.24 µg/L is greater than applicable WQBELs. Based on the sample results for the effluent, the limitations appear to put the Discharger in immediate non-compliance. New or modified control measures may be necessary in order to comply with the effluent limitations, and the new or modified control measures cannot be designed, installed and put into operation within 30 calendar days. Furthermore, the effluent limitations for cadmium are a new regulatory requirement within this permit, which becomes applicable to the waste discharge with the adoption of this Order, which was adopted after 1 July 2000. Therefore, a compliance time schedule for compliance with the cadmium effluent limitations is established in TSO No. R5-2010-XXXX in accordance with CWC section 13300, that requires preparation and implementation of a pollution prevention plan in compliance with CWC section 13263.3.

iv. Chlorine Residual

(a) WQO. USEPA developed NAWQC for protection of freshwater aquatic life for chlorine residual. The recommended 4-day average (chronic) and 1-hour average (acute) criteria for chlorine residual are 0.011 mg/L and 0.019 mg/L, respectively. These criteria are protective of the Basin Plan's narrative toxicity objective.

(b) RPA Results. The Discharger does not use chlorine for disinfection of the effluent; however, sodium hypochlorite is added into the backpulse flow during the period of the backpulse sequence to inhibit biogrowth in the membrane modules. Due to the existing chlorine use and the potential for

Deleted: HYDROSCIENCE OPERATIONS, INC.

chlorine to be discharged, the discharge has a reasonable potential to cause or contribute to an in-stream excursion above the NAWQC.

(c) WQBELs. The USEPA *Technical Support Document for Water Quality-Based Toxics Control* [EPA/505/2-90-001] contains statistical methods for converting chronic (4-day) and acute (1-hour) aquatic life criteria to average monthly and maximum daily effluent limitations based on the variability of the existing data and the expected frequency of monitoring. However, because chlorine is an acutely toxic constituent that can and will be monitored continuously, an average 1-hour limitation is considered more appropriate than an average daily limitation. This Order contains a 4-day average effluent limitation and 1-hour average effluent limitation for chlorine residual of 0.011 mg/L and 0.019 mg/L, respectively, based on USEPA's NAWQC, which implements the Basin Plan's narrative toxicity objective for protection of aquatic life.

(d) Plant Performance and Attainability. Analysis of the effluent data shows that concentrations of chlorine residual are consistently less than the applicable WQBELs. The Regional Water Board concludes, therefore, that immediate compliance with these effluent limitations is feasible.

v. Iron

(a) WQO. The Secondary MCL – Consumer Acceptance Limit for iron is 300 µg/L, which is used to interpret the Basin Plan's chemical constituent objective for the protection of the MUN beneficial use and is implemented as an annual average.

(b) RPA Results. The MEC for iron was 390 µg/L while the maximum observed upstream receiving water concentration was 780 µg/L. The maximum annual average effluent concentration of iron was 220 µg/L and the maximum annual average receiving water concentration was 780 µg/L. Because background annual average iron concentrations exceed the secondary MCL, and iron was detected in the effluent, iron in the discharge has a reasonable potential to cause or contribute to an in-stream excursion above the secondary MCL.

(c) WQBELs. This Order contains an annual average effluent limitation for iron as shown in Table F-8 of this Fact Sheet, based on the Basin Plan's narrative chemical constituents objective for the protection of the MUN beneficial use.

(d) Plant Performance and Attainability. Analysis of the effluent data shows that the maximum annual average effluent concentration of 220 µg/L is less than the applicable annual average WQBEL. The Regional Water Board concludes, therefore, that immediate compliance with these effluent limitations is feasible.

Deleted: HYDROSCIENCE OPERATIONS, INC.

vi. Lead

(a) WQO. The CTR includes hardness dependent criteria for the protection of freshwater aquatic life for lead. Section 1.3 of the SIP contains requirements for conducting the RPA for CTR constituents. Step 1 of the RPA requires that CTR criteria be adjusted for hardness, as applicable. In this case, the minimum observed upstream receiving water hardness, no receiving water assimilative capacity for lead (i.e., ambient background cadmium concentration is at the CTR chronic criterion), and the minimum effluent hardness were used to adjust the CTR criterion when comparing the MEC to the criteria and the minimum observed receiving water hardness was used when comparing the maximum background receiving water lead concentrations to the criteria. Using the minimum observed upstream receiving water hardness, no receiving water assimilative capacity for lead (i.e., ambient background cadmium concentration is at the CTR chronic criterion) and the minimum effluent hardness, the applicable acute (1-hour average) and chronic (4-day average) criteria for the effluent are 1.5 µg/L and 0.06 µg/L, respectively, as total recoverable. Using the default conversion factors and reasonable worst-case measured hardness of the receiving water, the applicable acute (1-hour average) and chronic (4-day average) criteria for the receiving water are 32 µg/L and 1.2 µg/L, respectively.

(b) RPA Results. The MEC for lead was 1.1 µg/L (as total recoverable). The maximum observed upstream receiving water concentration was 0.94 µg/L (as total recoverable). Because the MEC exceeds the chronic criterion for the effluent of 0.06 µg/L, lead in the discharge has a reasonable potential to cause or contribute to an in-stream excursion above the chronic CTR criterion for the protection of freshwater aquatic life.

(c) WQBELs. As described in section IV.C.2.c of the Fact Sheet, the ECA_{acute} and $ECA_{chronic}$ were determined assuming the minimum observed upstream receiving water hardness, no receiving water assimilative capacity for lead (i.e., ambient background lead concentration is at the CTR chronic criterion), and the minimum effluent hardness, which is protective under all discharge and mixing conditions. This results in an ECA_{acute} for lead of 1.5 µg/L and an $ECA_{chronic}$ of 0.06 µg/L. Using the procedures for calculating WQBELs in section 1.4 of the SIP, this Order contains a final AMEL and MDEL for lead as shown in Table F-8 of this Fact Sheet, based on the CTR criterion for the protection of freshwater aquatic life.

(d) Plant Performance and Attainability. Analysis of the effluent data shows that the MEC of 1.1 µg/L is greater than applicable WQBELs. Based on the sample results for the effluent, the limitations appear to put the Discharger in immediate non-compliance. New or modified control measures may be necessary in order to comply with the effluent limitations, and the new or modified control measures cannot be designed,

Deleted: HYDROSCIENCE OPERATIONS, INC.

installed and put into operation within 30 calendar days. Furthermore, the effluent limitations for lead are a new regulatory requirement within this permit, which becomes applicable to the waste discharge with the adoption of this Order, which was adopted after 1 July 2000. Therefore, a compliance time schedule for compliance with the lead effluent limitations is established in TSO No. R5-2010-XXXX in accordance with CWC section 13300, that requires preparation and implementation of a pollution prevention plan in compliance with CWC section 13263.3.

vii. Manganese

(a) WQO. The Secondary MCL – Consumer Acceptance Limit for manganese is 50 µg/L, which is used to interpret the Basin Plan's chemical constituent objective for the protection of the MUN beneficial use and is implemented as an annual average.

(b) RPA Results. The MEC for manganese was 5.6 µg/L while the maximum observed upstream receiving water concentration was 83 µg/L. The maximum annual average effluent concentration of manganese was 10 µg/L and the maximum annual average receiving water concentration was 83 µg/L. Because background annual average manganese concentrations exceed the secondary MCL, and manganese was detected in the effluent, manganese in the discharge has a reasonable potential to cause or contribute to an in-stream excursion above the secondary MCL.

(c) WQBELs. This Order contains an annual average effluent limitation for manganese as shown in Table F-8 of this Fact Sheet, based on the Basin Plan's narrative chemical constituents objective for the protection of the MUN beneficial use.

(d) Plant Performance and Attainability. Analysis of the effluent data shows that the maximum annual average effluent concentration of 10 µg/L is less than the applicable annual average WQBEL. The Regional Water Board concludes, therefore, that immediate compliance with these effluent limitations is feasible.

viii. Mercury

(a) WQO. The current NAWQC for protection of freshwater aquatic life, continuous concentration, for mercury is 0.77 µg/L (30-day average, chronic criteria). The CTR contains a human health criterion (based on a threshold dose level causing neurological effects in infants) of 0.050 µg/L for waters from which both water and aquatic organisms are consumed. Both values are controversial and subject to change. In 40 CFR Part 131, USEPA acknowledges that the human health criteria may not be protective of some aquatic or endangered species and that "…*more stringent mercury limits may be determined and implemented through use of the State's narrative criterion.*" In the CTR, USEPA reserved the

Deleted: HYDROSCIENCE OPERATIONS, INC.

mercury criteria for freshwater and aquatic life and may adopt new criteria at a later date.

(b) RPA Results. The maximum observed effluent mercury concentration was 0.0022 µg/L. Mercury bioaccumulates in fish tissue and, therefore, the discharge of mercury to the receiving water may contribute to exceedances of the narrative toxicity objective and impact beneficial uses. Discharges of mercury to surface waters in the Central Valley draining to the Sacramento San Joaquin Delta are being limited in order to protect the beneficial uses of the Delta.

(c) WQBELs. This Order contains a performance-based mass effluent limitation of 0.00020 lbs/month for mercury for the effluent discharged to the receiving water, based on the regulated flow of 0.35 MGD. The intention of the mass limitation is to maintain the mercury loading at the current level until a TMDL can be established and USEPA develops mercury standards that are protective of human health. The mass limitation was derived using the maximum observed effluent mercury concentration and the current regulated flow (0.35 MGD):

Deleted: mgd

Effluent concentration (mg/L) * 3.5 MGD * 8.34 (conversion factor) * [365 days / 12 months] = lbs/month

If USEPA develops new water quality standards for mercury, this permit may be reopened and the effluent limitations adjusted.

(d) Plant Performance and Attainability. The effluent limitations for mercury are based on treatment plant performance. The Regional Water Board concludes, therefore, that immediate compliance with these effluent limitations is feasible.

ix. Pathogens

The Regional Water Board, when developing NPDES permits, implements recommendations by the California Department of Public Health (DPH; formerly the Department of Health Services) for the appropriate disinfection requirements for the protection of MUN, REC-1 and AGR. The disinfection requirements in this Order implement the DPH recommendations and are fully protective of the beneficial uses of the receiving water.

Deleted: the proposed

(a) WQO. DPH has developed reclamation criteria, CCR, Division 4, Chapter 3 (Title 22), for the reuse of wastewater. Title 22 requires that for spray irrigation of food crops, parks, playgrounds, schoolyards, and other areas of similar public access, wastewater be adequately disinfected, oxidized, coagulated, clarified, and filtered, and that the effluent total coliform levels not exceed 2.2 MPN/100 mL as a 7-day median. As coliform organisms are living and mobile, it is impracticable to quantify an exact number of coliform organisms and to establish weekly average limitations. Instead,

Deleted: HYDROSCIENCE OPERATIONS, INC.

coliform organisms are measured as a most probable number and regulated based on a 7-day median limitation. The measure of coliform organisms is utilized as an indicator of the effectiveness of the entire treatment train and the effectiveness of removing other pathogens.

Title 22 also requires that recycled water used as a source of water supply for non-restricted recreational impoundments be disinfected tertiary recycled water that has been subjected to conventional treatment. A non-restricted recreational impoundment is defined as *"…an impoundment of recycled water, in which no limitations are imposed on body-contact water recreational activities.*" Title 22 is not directly applicable to surface waters; however, the Regional Water Board finds that it is appropriate to apply an equivalent level of treatment to that required by the DPH's reclamation criteria because the receiving water is used for irrigation of agricultural land and for contact recreation purposes. The stringent disinfection criteria of Title 22 are appropriate since the undiluted effluent may be used for the irrigation of food crops and/or for body-contact water recreation.

Total coliform organisms are an indicator of the level of pathogens in the effluent. Therefore, effluent limitations for total coliform organisms are necessary to control the discharge of pathogens, and have been included in this Order. In site-specific situations where a discharge is occurring to a stream with a downstream water intake used as a domestic water supply without treatment, the DPH has recommended the same Title 22 tertiary treatment requirements for the protection of MUN, as well as protecting REC-1 and AGR. DPH has also recommended a 20:1 dilution ratio in addition to the Title 22 tertiary treatment requirement where there are existing domestic water users of raw water near the treatment plant outfall. In this case, there are no such known uses that could be affected by the discharge, so tertiary treatment plus 20:1 dilution is not necessary to protect the MUN, REC-1 or AGR uses.

The chemical constituents narrative objective in the Basin Plan states, "*Waters shall not contain chemical constituents in concentrations that adversely affect beneficial uses*." The narrative toxicity objective states, "*All waters shall be maintained free of toxic substances in concentrations that produce detrimental physiological responses in human, plant, animal, or aquatic life*." When necessary, the Regional Water Board adopts numeric effluent limitations to implement these objectives on a case-by-case basis implementing relevant numerical criteria and guidelines developed and/or published by other agencies and organizations (e.g., State Water Board, DPH, California Office of Environmental Health Hazard Assessment, California Department of Toxic Substances Control, University of California Cooperative Extension, California Department of Fish and Game, USEPA, U.S. Food and Drug Administration, National Academy of Sciences, U.S. Fish and Wildlife Service, Food and Agricultural Organization of the United Nations). In considering such

Deleted: HYDROSCIENCE OPERATIONS, INC.

criteria, the Regional Water Board evaluates whether the specific numerical criteria, which are available through these sources and through other information supplied to the Regional Water Board, are relevant and appropriate to the situation at hand and, therefore, should be used in determining compliance with the narrative objective.

For public water supplies, state and federal law require residual chlorine and/or ultraviolet disinfection of surface water. (*See, e.g.,* Surface Water Treatment Rule, 40 C.F.R. Part 141, Subpart H; Cal. Code of Regs. Title 22, section 64447.) Treating pathogens to a level more stringent than tertiary treatment requires a chlorine residual in the effluent that is toxic to aquatic life in the receiving water. Pathogens are not bio-accumulative, so discharges at the permitted levels in this Order do not threaten potential uses of the receiving water for untreated domestic use. Therefore, the requirement to implement tertiary treatment only when 20:1 dilution is not available adequately protects beneficial uses and is appropriate for this discharge under the case-by-case approach.

(b) RPA Results. The beneficial uses of Orchard Creek include MUN, REC-1, and AGR, and there is, at times, less than 20:1 dilution. To protect these beneficial uses, the Regional Water Board finds that the wastewater must be disinfected and adequately treated to prevent disease. The method of treatment is not prescribed by this Order; however, wastewater must be treated to a level equivalent to that recommended by DPH.

(c) WQBELs. In accordance with the requirements of Title 22, this Order includes effluent limitations for total coliform organisms of 2.2 MPN/100 mL as a 7-day median; 23 MPN/100 mL, not to be exceeded more than once in a 30-day period; and 240 MPN/100 mL as an instantaneous maximum.

In addition to coliform testing, an operational specification for turbidity has been included to monitor the effectiveness of treatment filter performance, and to immediately signal the Discharger to implement operational procedures to correct deficiencies in filter performance. Higher effluent turbidity measurements do not necessarily indicate that the effluent discharge exceeds the water quality criteria/objectives for pathogens (i.e., bacteria, parasites, and viruses), which are the principal infectious agents that may be present in raw sewage. Since turbidity is not a valid indicator parameter for pathogens, the turbidity limitations in Order No. R5-2005-0032 are not imposed to protect the receiving water from excess turbidity. The former turbidity limitations were not technology-based effluent limitations or WQBELs for either pathogens or turbidity. Water quality-based turbidity limitations are not required because the effluent does not have a reasonable potential to cause or contribute to an exceedance of the applicable water quality objectives for turbidity.

Deleted: HYDROSCIENCE OPERATIONS, INC.

The tertiary treatment process, or equivalent, is capable of reliably treating wastewater to a turbidity level of 2 nephelometric turbidity units (NTU) as a daily average. Failure of the filtration system such that virus removal is impaired would normally result in increased particles in the effluent, which result in higher effluent turbidity. Turbidity has a major advantage for monitoring filter performance. Coliform testing, by comparison, is not conducted continuously and requires several hours, to days, to identify high coliform concentrations. Therefore, to ensure compliance with the DPH recommended Title 22 disinfection criteria, weekly average specifications are impracticable for turbidity. This Order includes operational specifications for turbidity of 2 NTU as a daily average; 5 NTU, not to be exceeded more than 5 percent of the time within a 24-hour period; and 10 NTU as an instantaneous maximum.

This Order contains effluent limitations for total coliform organisms and requires a tertiary level of treatment, or equivalent, necessary to protect the beneficial uses of the receiving water. The Regional Water Board has previously considered the factors in CWC section 13241 in establishing these requirements.

(d) Plant Performance and Attainability. The Discharger currently provides tertiary treatment which is capable of achieving Title 22 requirements for pathogens. The Regional Water Board concludes, therefore, that immediate compliance with these effluent limitations is feasible.

x. Persistent Chlorinated Hydrocarbon Pesticides

(a) WQO. The Basin Plan requires that no individual pesticides shall be present in concentrations that adversely affect beneficial uses; discharges shall not result in pesticide concentrations in bottom sediments or aquatic life that adversely affect beneficial uses; persistent chlorinated hydrocarbon pesticides shall not be present in the water column at detectable concentrations; and pesticide concentrations shall not exceed those allowable by applicable antidegradation policies. Persistent chlorinated hydrocarbon pesticides include aldrin; alpha-BHC; beta-BHC; gamma-BHC; delta-BHC; chlordane; 4,4-DDT; 4,4-DDE; 4,4-DDD; dieldrin; alpha-endosulfan; beta-endosulfan; endosulfan sulfate; endrin; endrin aldehyde; heptachlor; heptachlor epoxide; and toxaphene.

(b) RPA Results. Delta-BHC was detected in the effluent once at a concentration of 0.066 µg/L. Endrin aldehyde was detected in the effluent twice at concentrations of 0.077 µg/L and 0.18 µg/L. The detection of delta-BHC and endrin aldehyde in the effluent presents a reasonable potential to exceed the Basin Plan objectives for persistent chlorinated hydrocarbon pesticides.

(c) WQBELs. Effluent limitations for delta-BHC and endrin aldehyde are included in this Order and are based on the Basin Plan objective of no

Deleted: HYDROSCIENCE OPERATIONS, INC.

detectable concentrations of persistent chlorinated hydrocarbon pesticides. The remaining persistent chlorinated hydrocarbon pesticides did not exhibit reasonable potential to cause or contribute to an exceedance of water quality objectives and effluent limitations for those parameters are not included in this Order.

(d) Plant Performance and Attainability. Delta-BHC was detected once in May 2006, based on 44 samples collected between January 2006 and December 2008. Delta-BHC has not been detected in any samples since May 2006. Endrin aldehyde was detected twice in May and December 2006, based on 44 samples collected between January 2006 and December 2008. Endrin aldehyde has not been detected in any samples since December 2006. The Regional Water Board concludes, therefore, that immediate compliance with these effluent limitations is feasible.

xi. pH

(a) WQO. The Basin Plan includes a water quality objective for surface waters (except for Goose Lake) that the *"…pH shall not be depressed below 6.5 nor raised above 8.5. Changes in normal ambient pH levels shall not exceed 0.5 in fresh waters with designated COLD or WARM beneficial uses.*"

(b) RPA Results. The discharge of municipal wastewater has a reasonable potential to cause or contribute to an excursion above the Basin Plan's numeric objectives for pH.

(c) WQBELs. Effluent limitations for pH of 6.5 as an instantaneous minimum and 8.5 as an instantaneous maximum are included in this Order based on protection of the Basin Plan objectives for pH.

(d) Plant Performance and Attainability. The effluent pH was below the instantaneous minimum only twice in 1,093 samples and was not recorded above the instantaneous maximum of 8.5. The Regional Water Board concludes, therefore, that immediate compliance with these effluent limitations is feasible.

xii. Salinity

(a) WQO. There are no USEPA water quality criteria for the protection of aquatic organisms for electrical conductivity (EC), total dissolved solids (TDS), sulfate, and chloride. The Basin Plan contains a chemical constituent objective that incorporates state MCLs, contains a narrative objective, and contains numeric water quality objectives for EC, TDS, sulfate, and chloride.

Deleted: HYDROSCIENCE OPERATIONS, INC.

Table F-7. Salinity Water Quality Criteria/Objectives

Parameter	Agricultural WQ Goal[1]	Secondary MCL[3]	Effluent	
			Average	Maximum
EC (µmhos/cm)	Varies[2]	900, 1600, 2200	444	3500
TDS (mg/L)	Varies	500, 1000, 1500	252	560
Sulfate (mg/L)	Varies	250, 500, 600	54	59
Chloride (mg/L)	Varies	250, 500, 600	16	27

[1] Agricultural water quality goals based on *Water Quality for Agriculture*, Food and Agriculture Organization of the United Nations—Irrigation and Drainage Paper No. 29, Rev. 1 (R.S. Ayers and D.W. Westcot, Rome, 1985)

[2] The EC level in irrigation water that harms crop production depends on the crop type, soil type, irrigation methods, rainfall, and other factors. An EC level of 700 umhos/cm is generally considered to present no risk of salinity impacts to crops. However, many crops are grown successfully with higher salinities.

[3] The secondary MCLs are stated as a recommended level, upper level, and a short-term maximum level.

(1) Chloride. The secondary MCL for chloride is 250 mg/L, as a recommended level, 500 mg/L as an upper level, and 600 mg/L as a short-term maximum. The recommended agricultural water quality goal for chloride, that would apply the narrative chemical constituent objective, is 106 mg/L as a long-term average based on Water Quality for Agriculture, Food and Agriculture Organization of the United Nations—Irrigation and Drainage Paper No. 29, Rev. 1 (R.S. Ayers and D.W. Westcot, Rome, 1985). The 106 mg/L water quality goal is intended to protect against adverse effects on sensitive crops when irrigated via sprinklers.

(2) Electrical Conductivity. The secondary MCL for EC is 900 µmhos/cm as a recommended level, 1600 µmhos/cm as an upper level, and 2200 µmhos/cm as a short-term maximum. The agricultural water quality goal, that would apply the narrative chemical constituents objective, is 700 µmhos/cm as a long-term average based on Water Quality for Agriculture, Food and Agriculture Organization of the United Nations—Irrigation and Drainage Paper No. 29, Rev. 1 (R.S. Ayers and D.W. Westcot, Rome, 1985). The 700 µmhos/cm agricultural water quality goal is intended to prevent reduction in crop yield, i.e., a restriction on use of water, for salt-sensitive crops, such as beans, carrots, turnips, and strawberries. These crops are either currently grown in the area or may be grown in the future. Most other crops can tolerate higher EC concentrations without harm, however, as the salinity of the irrigation water increases, more crops are potentially harmed by the EC, or extra measures must be taken by the farmer to minimize or eliminate any harmful impacts.

(3) Sulfate. The secondary MCL for sulfate is 250 mg/L as a recommended level, 500 mg/L as an upper level, and 600 mg/L as a short-term maximum.

Deleted: HYDROSCIENCE OPERATIONS, INC.

(4) Total Dissolved Solids. The secondary MCL for TDS is 500 mg/L as a recommended level, 1000 mg/L as an upper level, and 1500 mg/L as a short-term maximum. The recommended agricultural water quality goal for TDS, that would apply the narrative chemical constituent objective, is 450 mg/L as a long-term average based on Water Quality for Agriculture, Food and Agriculture Organization of the United Nations—Irrigation and Drainage Paper No. 29, Rev. 1 (R.S. Ayers and D.W. Westcot, Rome, 1985). Water Quality for Agriculture evaluates the impacts of salinity levels on crop tolerance and yield reduction, and establishes water quality goals that are protective of the agricultural uses. The 450 mg/L water quality goal is intended to prevent reduction in crop yield, i.e. a restriction on use of water, for salt-sensitive crops. Only the most salt sensitive crops require irrigation water of 450 mg/L or less to prevent loss of yield. Most other crops can tolerate higher TDS concentrations without harm, however, as the salinity of the irrigation water increases, more crops are potentially harmed by the TDS, or extra measures must be taken by the farmer to minimize or eliminate any harmful impacts.

(b) RPA Results.

(1) Chloride. Chloride concentrations in the effluent ranged from 46 mg/L to 59 mg/L, with an average of 54 mg/L. These levels do not exceed the agricultural water goal. Background concentrations in Orchard Creek ranged from 5.2 mg/L to 10 mg/L, with an average of 7.8 mg/L, for six samples collected by the Discharger from January 2006 through December 2008.

(2) Electrical Conductivity. A review of the Discharger's monitoring reports shows an average effluent EC of 444 µmhos/cm, with a range from 250 µmhos/cm to 3,500 µmhos/cm. These levels exceed the agricultural water goal. The background receiving water EC averaged 189 µmhos/cm.

(3) Sulfate. Sulfate concentrations in the effluent ranged from 13 mg/L to 27 mg/L, with an average of 16 mg/L. These levels do not exceed the secondary MCL. Background concentrations in Orchard Creek ranged from 3.1 mg/L to 9.9 mg/L, with an average of 6.3 mg/L.

(4) Total Dissolved Solids. The average TDS effluent concentration was 252 mg/L with concentrations ranging from 200 mg/L to 560 mg/L. These levels exceed the applicable water quality objectives. The background receiving water TDS ranged from 81 mg/L to 120 mg/L, with an average of 103 mg/L.

(c) WQBELs. Effluent limitations based on the MCL or the Basin Plan would likely require construction and operation of a reverse osmosis treatment plant. The State Water Board, in Water Quality Order 2005-005 (for the

Deleted: HYDROSCIENCE OPERATIONS, INC.

City of Manteca), states, "*…the State Board takes official notice [pursuant to Title 23 of California Code of Regulations, Section 648.2] of the fact that operation of a large-scale reverse osmosis treatment plant would result in production of highly saline brine for which an acceptable method of disposal would have to be developed. Consequently, any decision that would require use of reverse osmosis to treat the City's municipal wastewater effluent on a large scale should involve thorough consideration of the expected environmental effects.*" The State Water Board states in that Order, "*Although the ultimate solution to southern Delta salinity problems have not yet been determined, previous actions establish that the State Board intended for permit limitations to play a limited role with respect to achieving compliance with the EC water quality objectives in the southern Delta.*" The State Water Board goes on to say, "*Construction and operation of reverse osmosis facilities to treat discharges…prior to implementation of other measures to reduce the salt load in the southern Delta, would not be a reasonable approach*."

The Regional Water Board, with cooperation of the State Water Board, has begun the process to develop a new policy for the regulation of salinity in the Central Valley. In a statement issued at the 16 March 2006, Regional Water Board meeting, Board Member Dr. Karl Longley recommended that the Regional Water Board continue to exercise its authority to regulate discharges of salt to minimize salinity increases within the Central Valley. Dr. Longley stated, "*The process of developing new salinity control policies does not, therefore, mean that we should stop regulating salt discharges until a salinity Policy is developed. In the meantime, the Board should consider all possible interim approaches to continue controlling and regulating salts in a reasonable manner, and encourage all stakeholder groups that may be affected by the Regional Board's policy to actively participate in policy development.*"

Order No. R5-2005-0032 established an AMEL for electrical conductivity of 700 µmhos/cm based on the agricultural water goal. Based on the exceedances of the agricultural water goal during the term of Order No. R5-2005-0032, this Order retains the effluent limitation for electrical conductivity. Electrical conductivity is an indicator parameter for salinity, including chloride, sulfate, and TDS. Establishing effluent limitations for electrical conductivity is expected to effectively limit the constituents that contribute to salinity. Therefore, effluent limitations for chloride, sulfate, and TDS are not included in this Order. This Order also requires the Discharger to develop a salinity evaluation and minimization plan to address sources of salinity from the domestic wastewater treatment system.

(d) Plant Performance and Attainability. Effluent concentrations of electrical conductivity exceeded the applicable WQBEL on seven occasions out of 492 sampling events, or 1.4 percent of the time. The

Deleted: HYDROSCIENCE OPERATIONS, INC.

Regional Water Board concludes, therefore, that immediate compliance with these effluent limitations is feasible.

xiii. Zinc

(a) WQO. The CTR includes hardness dependent criteria for the protection of freshwater aquatic life for zinc. Section 1.3 of the SIP contains requirements for conducting the RPA for CTR constituents. Step 1 of the RPA requires that CTR criteria be adjusted for hardness, as applicable. In this case, the minimum observed effluent hardness was used to adjust the CTR criteria for zinc when comparing the MEC to the criteria and the minimum observed receiving water hardness was used when comparing the maximum background receiving water copper concentrations to the criteria. Using the default conversion factors and reasonable worst-case measured hardness of the effluent, the applicable acute (1-hour average) and chronic (4-day average) criteria for the effluent are both 20 µg/L, as total recoverable. Using the default conversion factors and reasonable worst-case measured hardness of the receiving water, the applicable acute (1-hour average) and chronic (4-day average) criteria for the receiving water are both 64 µg/L, as total recoverable.

(b) RPA Results. The MEC for zinc was 89 µg/L (as total recoverable). The maximum observed upstream receiving water concentration was 7.4 µg/L (as total recoverable). Because the MEC exceeds the acute and chronic criteria for the effluent of 20 µg/L, zinc in the discharge has a reasonable potential to cause or contribute to an in-stream excursion above the CTR criteria for the protection of freshwater aquatic life.

(c) WQBELs. As described in section IV.C.2.c of the Fact Sheet, the ECA_{acute} and $ECA_{chronic}$ were determined using the minimum observed effluent hardness, which is protective under all discharge and mixing conditions. This results in an ECA_{acute} and an $ECA_{chronic}$ for zinc of 20 µg/L. This Order contains a final AMEL and MDEL for zinc as shown in Table F-8 of this Fact Sheet, based on the CTR criterion for the protection of freshwater aquatic life.

(d) Plant Performance and Attainability. Analysis of the effluent data shows that the MEC of 89 µg/L is greater than applicable WQBELs. Based on the sample results for the effluent, the limitations appear to put the Discharger in immediate non-compliance. New or modified control measures may be necessary in order to comply with the effluent limitations, and the new or modified control measures cannot be designed, installed and put into operation within 30 calendar days. Furthermore, the effluent limitations for zinc are a new regulatory requirement within this permit, which becomes applicable to the waste discharge with the adoption of this Order, which was adopted after 1 July 2000. Therefore, a compliance time schedule for compliance with the zinc effluent limitations is established in TSO No. R5-2010-XXXX in accordance with CWC

Deleted: HYDROSCIENCE OPERATIONS, INC.

section 13300, that requires preparation and implementation of a pollution prevention plan in compliance with CWC section 13263.3.

4. WQBEL Calculations

a. This Order includes WQBELs for aluminum, ammonia, chlorine residual, delta-BHC, electrical conductivity, endrin aldehyde, iron, lead, manganese, mercury, pathogens, pH, and zinc. The general methodology for calculating WQBELs based on the different criteria/objectives is described in subsections IV.C.4.b through e, below. See Attachment H for the WQBEL calculations.

b. Effluent Concentration Allowance. For each water quality criterion/objective, the ECA is calculated using the following steady-state mass balance equation from Section 1.4 of the SIP:

$ECA = C + D(C - B)$ *where C>B, and*
$ECA = C$ *where C≤B*

where:
ECA = effluent concentration allowance
D = dilution credit
C = the priority pollutant criterion/objective
B = the ambient background concentration.

According to the SIP, the ambient background concentration (B) in the equation above shall be the observed maximum with the exception that an ECA calculated from a priority pollutant criterion/objective that is intended to protect human health from carcinogenic effects shall use the arithmetic mean concentration of the ambient background samples. For ECAs based on MCLs, which implement the Basin Plan's chemical constituents objective and are applied as annual averages, an arithmetic mean is also used for B due to the long-term basis of the criteria.

c. Basin Plan Objectives and MCLs. For WQBELs based on site-specific numeric Basin Plan objectives or MCLs, the effluent limitations are applied directly as the ECA as either an MDEL, AMEL, or average annual effluent limitations, depending on the averaging period of the objective.

d. Aquatic Toxicity Criteria. WQBELs based on acute and chronic aquatic toxicity criteria are calculated in accordance with Section 1.4 of the SIP. The ECAs are converted to equivalent long-term averages (i.e., LTA_{acute} and $LTA_{chronic}$) using statistical multipliers and the lowest LTA is used to calculate the AMEL and MDEL using additional statistical multipliers.

e. Human Health Criteria. WQBELs based on human health criteria, are also calculated in accordance with Section 1.4 of the SIP. The ECAs are set equal to the AMEL and a statistical multiplier was used to calculate the MDEL.

Deleted: HYDROSCIENCE OPERATIONS, INC.

$$AMEL = mult_{AMEL}\left[\min\left(\overbrace{M_A ECA_{acute}}^{LTA_{acute}}, M_C ECA_{chronic}\right)\right]$$

$$MDEL = mult_{MDEL}\left[\min\left(M_A ECA_{acute}, \underbrace{M_C ECA_{chronic}}_{LTA_{chronic}}\right)\right]$$

$$MDEL_{HH} = \left(\frac{mult_{MDEL}}{mult_{AMEL}}\right) AMEL_{HH}$$

where:
$mult_{AMEL}$ = statistical multiplier converting minimum LTA to AMEL
$mult_{MDEL}$ = statistical multiplier converting minimum LTA to MDEL
MA = statistical multiplier converting acute ECA to LTA_{acute}
MC = statistical multiplier converting chronic ECA to $LTA_{chronic}$

See Section IV.D of this Fact Sheet for a summary of WQBELs contained in this Order.

5. Whole Effluent Toxicity (WET)

For compliance with the Basin Plan's narrative toxicity objective, this Order requires the Discharger to conduct whole effluent toxicity testing for acute and chronic toxicity, as specified in the Monitoring and Reporting Program (Attachment E, section V). This Order also contains effluent limitations for acute toxicity and chronic toxicity. The Order also requires the Discharger to implement best management practices to investigate the causes of, and identify corrective actions to reduce or eliminate effluent toxicity.

a. Acute Aquatic Toxicity. The Basin Plan contains a narrative toxicity objective that states, "*All waters shall be maintained free of toxic substances in concentrations that produce detrimental physiological responses in human, plant, animal, or aquatic life.*" (Basin Plan at page III-8.00) The Basin Plan also states that, "*…effluent limits based upon acute biotoxicity tests of effluents will be prescribed where appropriate…*". USEPA Region 9 provided guidance for the development of acute toxicity effluent limitations in the absence of numeric water quality objectives for toxicity in its document titled "Guidance for NPDES Permit Issuance", dated February 1994. In section B.2. "Toxicity Requirements" (pgs. 14-15) it states that, "*In the absence of specific numeric water quality objectives for acute and chronic toxicity, the narrative criterion 'no toxics in toxic amounts' applies. Achievement of the narrative criterion, as applied herein, means that ambient waters shall not demonstrate for acute toxicity: 1) less than 90% survival, 50% of the time, based on the monthly median, or 2) less than 70% survival, 10% of the time, based on any monthly median. For chronic toxicity, ambient waters shall not demonstrate a test result of greater than 1 TUc.*" Accordingly, effluent limitations for acute toxicity have been included in this Order as follows:

Deleted: HYDROSCIENCE OPERATIONS, INC.

Acute Toxicity. Survival of aquatic organisms in 96-hour bioassays of undiluted waste shall be no less than:

Minimum for any one bioassay---------- 70%
Median for any three or more consecutive bioassays --------- 90%

b. **Chronic Aquatic Toxicity.** The Basin Plan contains a narrative toxicity objective that states, "*All waters shall be maintained free of toxic substances in concentrations that produce detrimental physiological responses in human, plant, animal, or aquatic life.*" (Basin Plan at page III-8.00.) The following table summarizes test results exceeding 1 chronic toxicity unit (TUc) based on quarterly whole effluent chronic toxicity testing performed by the Discharger from January 2006 through December 2008.

Table F-7. Summary of Chronic Aquatic Toxicity Results

Date	Species	Test Endpoint	Result (TUc)
10 May 2006	*Pimephales promelas*	Growth	>1
10 May 2006	*Selenastrum capricornutum*	Growth	>1
3 May 2007	*Ceriodaphnia dubia*	Reproduction	>1
1 August 2007	*Ceriodaphnia dubia*	Reproduction	>1
16 October 2007	*Ceriodaphnia dubia*	Reproduction	4
14 February 2008	*Selenastrum capricornutum*	Growth	>1
30 April 2008	*Selenastrum capricornutum*	Growth	>1
30 July 2008	*Ceriodaphnia dubia*	Reproduction	>1

Based on chronic WET testing performed by the Discharger from January 2006 through December 2008, the discharge has reasonable potential to cause or contribute to an in-stream excursion above of the Basin Plan's narrative toxicity objective.

No dilution has been granted in this Order for the chronic condition. Chronic toxicity testing results exceeding 1 chronic toxicity unit (TUc) demonstrates that the discharge has a reasonable potential to cause or contribute to an exceedance of the Basin Plan's narrative toxicity objective. Therefore, this Order includes a narrative chronic toxicity effluent limitation.

Numeric chronic WET effluent limitations have not been included in this Order. The SIP contains implementation gaps regarding the appropriate form and implementation of chronic toxicity limits. This has resulted in the petitioning of a NPDES permit in the Los Angeles Region[1] that contained numeric chronic toxicity effluent limitations. To address the petition, the State Water Board adopted WQO 2003-012 directing its staff to revise the toxicity control provisions in the SIP. The State Water Board states the following in WQO 2003-012, "*In reviewing this petition and receiving comments from numerous interested*

[1] In the Matter of the Review of Own Motion of Waste Discharge Requirements Order Nos. R4-2002-0121 [NPDES No. CA0054011] and R4-2002-0123 [NPDES NO. CA0055119] and Time Schedule Order Nos. R4-2002-0122 and R4-2002-0124 for Los Coyotes and Long Beach Wastewater Reclamation Plants Issued by the California Regional Water Quality Control Board, Los Angeles Region SWRCB/OCC FILES A-1496 AND 1496(a).

Deleted: HYDROSCIENCE OPERATIONS, INC.

persons on the propriety of including numeric effluent limitations for chronic toxicity in NPDES permits for publicly-owned treatment works that discharge to inland waters, we have determined that this issue should be considered in a regulatory setting, in order to allow for full public discussion and deliberation. We intend to modify the SIP to specifically address the issue. We anticipate that review will occur within the next year. We therefore decline to make a determination here regarding the propriety of the final numeric effluent limitations for chronic toxicity contained in these permits." The process to revise the SIP is currently underway. Proposed changes include clarifying the appropriate form of effluent toxicity limits in NPDES permits and general expansion and standardization of toxicity control implementation related to the NPDES permitting process. Since the toxicity control provisions in the SIP are under revision it is infeasible to develop numeric effluent limitations for chronic toxicity. Therefore, this Order requires that the Discharger implement best management practices for compliance with the Basin Plan's narrative toxicity objective, as allowed under 40 CFR 122.44(k).

To ensure compliance with the Basin Plan's narrative toxicity objective, the Discharger is required to conduct chronic WET testing, as specified in the Monitoring and Reporting Program (Attachment E, section V). Furthermore, the Special Provision contained at VI.C.2.a. of this Order requires the Discharger to investigate the causes of, and identify and implement corrective actions to reduce or eliminate, effluent toxicity. If the discharge demonstrates a pattern of toxicity exceeding the numeric toxicity monitoring trigger, the Discharger is required to initiate a Toxicity Reduction Evaluation (TRE) in accordance with an approved TRE workplan. The numeric toxicity monitoring trigger is not an effluent limitation; it is the toxicity threshold at which the Discharger is required to perform accelerated chronic toxicity monitoring, as well as the threshold to initiate a TRE if a pattern of effluent toxicity has been demonstrated.

D. Final Effluent Limitations

Table F-8. Summary of Final Effluent Limitations

Parameter	Units	Effluent Limitations					Basis[1]
		Average Monthly	Average Weekly	Maximum Daily	Instantaneous Minimum	Instantaneous Maximum	
Flow	MGD[2]	--	--	0.35	--	--	DC
	MGD[3]	--	--	0.7	--	--	DC
	MGD[4]	--	--	0.875	--	--	DC
Conventional Pollutants							
Biochemical Oxygen Demand (5-day @ 20°C)	mg/L	10	15	20	--	--	TTC
	lbs/day[2,5]	29	44	58	--	--	
	lbs/day[3,6]	58	88	117	--	--	
	lbs/day[4,7]	73	109	146	--	--	
	% Removal	85	--	--	--	--	CFR
pH	standard units	--	--	--	6.5	8.5	BP

Formatted: Superscript

Deleted: [3]

Deleted: [4]

Formatted: Superscript

Deleted: [3,5]

Deleted: HYDROSCIENCE OPERATIONS, INC.

Parameter	Units	Effluent Limitations					Basis[1]
		Average Monthly	Average Weekly	Maximum Daily	Instantaneous Minimum	Instantaneous Maximum	
Total Suspended Solids	mg/L	10	15	20	--	--	TTC
	lbs/day[2,5]	29	44	58	--	--	
	lbs/day[3,6]	58	88	117	--	--	
	lbs/day[4,7]	73	109	146	--	--	
	% Removal	85	--	--	--	--	CFR
Priority Pollutants							
Cadmium, Total Recoverable	µg/L	0.05	--	0.10	--	--	CTR
Delta-BHC	µg/L	--	--	--	--	ND	BP
Endrin Aldehyde	µg/L	--	--	--	--	ND	BP
Lead, Total Recoverable	µg/L	0.05	--	0.10	--	--	CTR
Mercury, Total Recoverable	lbs/month[2]	0.00020[8]	--	--	--	--	PB
Zinc, Total Recoverable	µg/L	10	--	20	--	--	CTR
Non-Conventional Pollutants							
Aluminum, Total Recoverable	µg/L	76	--	128	--	--	NAWQC
Ammonia Nitrogen, Total (as N)	mg/L	1.1	--	2.1	--	--	NAWQC
	lbs/day[2,5]	3.2	--	6.1	--	--	
	lbs/day[3,6]	6.4	--	12	--	--	
	lbs/day[4,7]	8.0	--	15	--	--	
Chlorine, Total Residual	mg/L	--	0.011[9]	0.019[10]	--	--	NAWQC
Electrical Conductivity @ 20°C	µmhos/cm	700	--	--	--	--	AGR
Iron, Total Recoverable	µg/L	300[11]	--	--	--	--	SEC MCL
Manganese, Total Recoverable	µg/L	50[11]	--	--	--	--	SEC MCL
Total Coliform Organisms	MPN/100 mL	--	2.2[12]	23[13]	--	240	Title 22

Deleted: [4]
Deleted: [3,5]
Deleted: [6]
Deleted: [4]
Formatted: Superscript
Deleted: [3,5]
Deleted: [8]
Deleted: [9]
Deleted: [10]
Deleted: [10]
Deleted: [11]
Deleted: [12]

Deleted: HYDROSCIENCE OPERATIONS, INC.

Parameter	Units	Effluent Limitations					Basis[1]
		Average Monthly	Average Weekly	Maximum Daily	Instantaneous Minimum	Instantaneous Maximum	

ND – Non-detect

[1] DC – Based on the design capacity of the Facility.
TTC – Based on tertiary treatment capability. These effluent limitations reflect the capability of a properly operated tertiary treatment plant.
CFR – Based on secondary treatment standards contained in 40 CFR Part 133.
BP – Based on water quality objectives contained in the Basin Plan.
CTR – Based on water quality criteria contained in the California Toxics Rule and applied as specified in the SIP.
PB – Based on the performance of the treatment system.
NAWQC – Based on USEPA's National Ambient Water Quality Criteria for the protection of freshwater aquatic life.
SEC MCL – Based on the Secondary Maximum Contaminant Level.
Title 22 – Based on CA Department of Public Health Reclamation Criteria, CCR, Division 4, Chapter 3 (Title 22).

[2] Applicable until completion of the first phase of upgrades to the Facility.

[3] Applicable upon completion of the first phase of upgrades to the Facility and until completion of the second phase of upgrades to the Facility.

[4] Applicable upon completion of the second phase of upgrades to the Facility.

[5] Based on the design flow of the existing Facility of 0.35 MGD.

[6] Based on the design flow of the Facility after completion of the first phase of upgrades to 0.7 MGD.

[7] Based on the design flow of the Facility after completion of the second phase of upgrades to 0.875 MGD.

[8] The total monthly mass discharge of mercury from the current Facility shall not exceed 0.00020 lbs.

[9] Applied as a 4-day average effluent limitation.

[10] Applied as a 1-hour average effluent limitation.

[11] Applied as an annual average effluent limitation.

[12] Applied as a 7-day median effluent limitation.

[13] Effluent total coliform organisms are not to exceed 23 MPN/100 mL more than once in any 30-day period.

Deleted: [3]
Deleted: [4]
Deleted: [5]
Deleted: upgraded
Deleted: of
Deleted: [6]
Deleted: [7] The total monthly mass discharge of mercury from the upgraded Facility shall not exceed 0.00049 lbs.¶
Deleted: [8]
Deleted: [9]
Deleted: [10]
Deleted: [11]
Deleted: [12]

1. Mass-based Effluent Limitations

40 CFR 122.45(f)(1) requires effluent limitations be expressed in terms of mass, with some exceptions, and 40 CFR 122.45(f)(2) allows pollutants that are limited in terms of mass to additionally be limited in terms of other units of measurement. This Order includes effluent limitations expressed in terms of mass and concentration. In addition, pursuant to the exceptions to mass limitations provided in 40 CFR 122.45(f)(1), some effluent limitations are not expressed in terms of mass, such as pH and temperature, and when the applicable standards are expressed in terms of concentration (e.g., CTR criteria and MCLs) and mass limitations are not necessary to protect the beneficial uses of the receiving water.

Mass-based effluent limitations have been established in this Order for BOD_5, TSS, and ammonia because they are oxygen-demanding substances. Mass-based effluent limitations have been established for mercury because it is a bioaccumulative pollutant and because the Sacramento River is listed as impaired due to mercury. Mass-based effluent limitations were calculated based upon the permitted maximum daily effluent flow allowed in Section IV.A.1.f of the Limitations and Discharge Requirements.

Deleted: HYDROSCIENCE OPERATIONS, INC.

Except for the pollutants listed above, mass-based effluent limitations are not included in this Order for pollutant parameters for which effluent limitations are based on water quality objectives and criteria that are concentration-based.

2. Averaging Periods for Effluent Limitations

40 CFR 122.45(d) requires average weekly and average monthly discharge limitations for publicly owned treatment works (POTWs) unless impracticable. However, for toxic pollutants and pollutant parameters in water quality permitting, USEPA recommends the use of an MDEL in lieu of average weekly effluent limitations for two reasons. "*First, the basis for the 7-day average for POTWs derives from the secondary treatment requirements. This basis is not related to the need for assuring achievement of water quality standards. Second, a 7-day average, which could comprise up to seven or more daily samples, could average out peak toxic concentrations and therefore the discharge's potential for causing acute toxic effects would be missed.*" (TSD, pg. 96) This Order utilizes MDELs in lieu of average weekly effluent limitations for ammonia, lead, and zinc as recommended by the TSD for the achievement of water quality standards and for the protection of the beneficial uses of the receiving stream. Furthermore, for BOD_5, chlorine residual, pH, total coliform organisms, and TSS, weekly average effluent limitations have been replaced or supplemented with effluent limitations utilizing shorter averaging periods. The rationale for using shorter averaging periods for these constituents is discussed in section IV.C.3. of this Fact Sheet.

For effluent limitations based on Secondary MCLs, this Order includes annual average effluent limitations. The Secondary MCLs are drinking water standards contained in Title 22 of the California Code of Regulations. Title 22 requires compliance with these standards on an annual average basis, when sampling at least quarterly. Since it is necessary to determine compliance on an annual average basis, it is impracticable to calculate average weekly and average monthly effluent limitations.

3. Satisfaction of Anti-Backsliding Requirements

The Clean Water Act specifies that a revised permit may not include effluent limitations that are less stringent than the previous permit unless a less stringent limitation is justified based on exceptions to the anti-backsliding provisions contained in Clean Water Act sections 402(o) or 303(d)(4), or, where applicable, 40 CFR 122.44(l).

The effluent limitations in this Order are at least as stringent as the effluent limitations in Order No. R5-2005-0032, with the exception of effluent limitations for ammonia, arsenic, atrazine, boron, bromoform, chlorodibromomethane, copper, dichlorobromomethane, fluoride, MBAS, nitrate, persistent chlorinated hydrocarbon pesticides (except delta-BHC and endrin aldehyde), settleable solids, sulfate, total trihalomethanes, and turbidity. The effluent limitations for these pollutants are less stringent than those in Order No. R5-2005-0032. This relaxation of effluent

Deleted: HYDROSCIENCE OPERATIONS, INC.

limitations is consistent with the anti-backsliding requirements of the CWA and federal regulations.

This Order includes revised effluent limitations for ammonia based on monitoring data conducted over the term of Order No. R5-2005-0032 and calculated according to SIP procedures. Based on updated monitoring data used to determine applicable criteria (i.e., paired effluent pH and temperature data collected between January 2006 and December 2008) that was not available at the time Order No. R5-2005-0032 was issued, the applicable AMEL is less stringent than the AMEL established in Order No. R5-2005-0032. Additionally, the 1-hour average effluent limitation contained in Order No. R5-2005-0032 has been revised to an MDEL; however, the magnitude of the MDEL is more stringent than the 1-hour average effluent limitation. The new effluent limitations for ammonia are protective of water quality standards. Therefore, relaxation of effluent limitations is allowed under CWA section 402(o)(2)(B)(i). As described in section IV.D.4 of the Fact Sheet, the establishment of less stringent effluent limitations for ammonia is consistent with the antidegradation provisions of 40 CFR 131.12 and State Water Resources Control Board Resolution 68-16. Any impact on existing water quality will be insignificant. Therefore, relaxation of effluent limitations is allowed under CWA section 303(d)(4).

Order No. R5-2005-0032 established effluent limitations for arsenic, atrazine, boron, bromoform, chlorodibromomethane, copper, dichlorobromomethane, fluoride, MBAS, nitrate, persistent chlorinated hydrocarbon pesticides, settleable solids, sulfate, and total trihalomethanes. Based on updated monitoring data that was not available at the time Order No. R5-2005-0032 was issued, these parameters do not exhibit reasonable potential to cause or contribute to an exceedance of water quality objectives in the receiving water. Therefore, relaxation of effluent limitations is allowed under CWA section 402(o)(2)(B)(i). The discharge does not have the reasonable potential to cause or contribute to an exceedance of water quality standards for these parameters in the receiving water and all beneficial uses will be maintained. As described in section IV.D.4 of the Fact Sheet, discontinuing effluent limitations for these parameters is consistent with the antidegradation provisions of 40 CFR 131.12 and State Water Resources Control Board Resolution 68-16. Any impact on existing water quality will be insignificant. Therefore, relaxation of effluent limitations is allowed under CWA section 303(d)(4).

Order No. R5-2005-0032 contained effluent limitations for turbidity. The prior limitations were solely an operational check to ensure the treatment system was functioning properly and could meet the limits for solids and coliform. The prior effluent limitations were not intended to regulate turbidity in the receiving water. Rather, turbidity is an operational parameter to determine proper system functioning and not a WQBEL.

This Order contains performance-based operational turbidity specifications to be met prior to disinfection in lieu of effluent limitations. The revised Order does not include effluent limitations for turbidity. However, the performance-based specification in this Order is an equivalent limit that is not less stringent, and therefore does not constitute backsliding.

Deleted: HYDROSCIENCE OPERATIONS, INC.

The operational specifications for turbidity have been revised to be consistent with Title 22 requirements. (See Special Provisions VI.C.4.b, Ultraviolet Disinfection (UV) System Operating Specifications for turbidity specifications.) The revised Order moves the point of compliance from the final effluent after disinfection to an internal compliance point prior to disinfection. These revisions are consistent with state regulations implementing recycled water requirements.

The revision in the turbidity limitation is consistent with the antidegradation provisions of 40 CFR 131.12 and State Water Board Resolution 68-16 because this Order imposes equivalent or more stringent requirements than Order No. R5-2005-0032 and therefore does not allow degradation.

Order No. R5-2005-0032 established final mass-based effluent limitations for aluminum and chlorine residual. 40 CFR 122.45(f)(1)(ii) states that mass limitations are not required when applicable standards and limitations are expressed in terms of other units of measurement. The numerical effluent limitations for aluminum and chlorine residual established in this Order are based on water quality standards and objectives, which are expressed in terms of concentration. Pursuant to 40 CFR 122.25(f)(1)(ii), expressing the effluent limitations in terms of concentration is in accordance with Federal Regulations. Compliance with the concentration-based limits will ensure that significantly less mass of the pollutants is discharged to the receiving water. Discontinuing mass-based effluent limitations for these parameters is consistent with the antidegradation provisions of 40 CFR 131.12 and State Water Resources Control Board Resolution 68-16. Any impact on existing water quality will be insignificant. Therefore, relaxation of effluent limitations is allowed under CWA section 303(d)(4).

4. Satisfaction of Antidegradation Policy

As part of the January 2008 Report of Waste Discharge, and additional information provided on 26 October 2009, the Discharger provided a complete antidegradation analysis following the guidance provided by State Water Board APU 90-004. Pursuant to the guidelines, the analysis evaluated whether changes in water quality resulting from the proposed increase in discharge to Orchard Creek (from 0.35 MGD to 0.875 MGD tertiary treated wastewater) are consistent with the maximum benefit to the people of the State, will not unreasonably affect beneficial uses, will not cause water quality to be less than water quality objectives, and that the discharge provides protection for existing in-stream uses and water quality necessary to protect those uses. The Regional Water Board concurs with the antidegradation analysis.

a. Water quality parameters and beneficial uses which will be affected by this Order and the extent of the impact. This Order does not adversely impact beneficial uses of the receiving water or downstream receiving waters. All beneficial uses will be maintained and protected. This Order provides for an increase in the volume and mass of pollutants discharged directly to the receiving water. 40 CFR 131.12 defines the following tier designations to describe water quality in the receiving water body.

Deleted: HYDROSCIENCE OPERATIONS, INC.

Tier 1 Designation: *Existing instream water uses and the level of water quality necessary to protect the existing uses shall be maintained and protected. (40 CFR 131.12)*

Tier 2 Designation: *Where the quality of waters exceed levels necessary to support propagation of fish, shellfish, and wildlife and recreation in and on the water, that quality shall be maintained and protected unless the State finds, after full satisfaction of the intergovernmental coordination and public participation provisions of the State's continuing planning process, that allowing lower water quality is necessary to accommodate important economic or social development in the area in which the waters are located. In allowing such degradation or lower water quality, the State shall assure water quality adequate to protect existing uses fully. Further, the State shall assure that there shall be achieved the highest statutory and regulatory requirements for all new and existing point sources and all cost-effective and reasonable best management practices for nonpoint source control. (40 CFR 131.12)*

The tier designation is assigned on a pollutant-by-pollutant basis. The following is the potential effect on water quality parameters regulated in this Order, as was assessed in the antidegradation analysis:

i. Orchard Creek was designated as a Tier 1 receiving water for aluminum, iron, manganese, and beta-BHC because these constituents were detected in the receiving water above water quality criteria.

ii. Orchard Creek was designated as a Tier 2 receiving water for ammonia, arsenic, barium, boron, chloride, copper, electrical conductivity, endrin aldehyde, fluoride, methylene blue active substances, lead, mercury, nickel, nitrate, nitrite, sulfate, total dissolved solids, and zinc. Except for zinc, each of these parameters used less than 10 percent of available assimilative capacity in Orchard Creek. Thus, the proposed increased discharge will be protective of beneficial uses and will maintain greater than 90 percent of assimilative capacity in Orchard Creek.

iii. The Discharger estimated that the increased discharge would result in the use of 20 percent of available assimilative capacity for zinc. Effluent limitations have been established in this Order which are protective of beneficial uses. As discussed below, the antidegradation analysis evaluated whether allowance of an increase in zinc concentrations is in the best interest of the people of the State.

iv. The increase in discharge would negligibly increase loading of bioaccumulative constituents, including selenium and mercury.

b. Scientific Rationale for Determining Potential Lowering of Water Quality. The rationale used in the antidegradation analysis is based on 40 CFR 131.12, USEPA memorandum Regarding Tier 2 Antidegradation Reviews and Significance Thresholds (USEPA 2005), USEPA Region 9 Guidance on

Deleted: HYDROSCIENCE OPERATIONS, INC.

Implementing the Antidegradation Provisions of 40 CFR 131.12 (USEPA 1987), State Water Board Resolution No. 68-16, a State Water Board 1987 policy memorandum to the Regional Water Boards, and an Administrative Procedures Update (APU 90-004) issued by the State Water Board to the Regional Water Boards.

The scientific rationale used in the antidegradation analysis to determine if the Order allows a lowering of water quality is to determine the reduction of assimilative capacity. Assimilative capacity was calculated on a mass-balanced, concentration basis and, for bioaccumulative constituents, calculated on a mass loading basis. This approach is consistent with recent USEPA guidance and addresses a key objective of the antidegradation analysis to "[c]*ompare receiving water quality to the water quality objectives established to protect designated beneficial uses*" (APU 90-004). USEPA has recommended ten (10) percent as a measure of significance for identifying those substantial lowerings of water quality that should receive a full tier 2 antidegradation review. APU 90-004 requires the consideration of "feasible alternative control measures" as part of the procedures for a complete antidegradation analysis.

The antidegradation analysis analyzed each pollutant detected in the effluent and receiving water to determine if the proposed increase in discharge from 0.35 MGD to 0.875 MGD authorized by this Order potentially allows significant increase of the amount of pollutants present in the upstream and downstream receiving water influenced by the proposed discharge. Pollutants that significantly increased concentration or mass downstream required an alternatives analysis to determine whether implementation of alternatives to the proposed action would be in the best socioeconomic interest of the people of the region, and be to the maximum benefit of the people of the State. Details on the scientific rationale are discussed in detail in the antidegradation analysis.

The Regional Water Board concurs with this scientific approach.

c. Alternative Control Measures. The Discharger considered several alternatives that would reduce or eliminate the lowering of water quality resulting from the proposed increase in discharge from 0.35 MGD to 0.875 MGD. A number of effluent disposal alternatives were assessed to determine if any alternative would substantially reduce or eliminate the lowering of water quality as a result of the proposed increase in discharge from 0.35 MGD to 0.875 MGD. These alternatives are summarized below:

i. Connection to the City of Lincoln Wastewater Treatment and Reclamation Facility Via a Gravity Sewer Line – A gravity sewer line required to convey 100 percent of the wastewater generated by the expanded casino and hotel facilities to the City of Lincoln Wastewater Treatment and Reclamation Facility would be constructed as part of the South Lincoln Regional Sewer System (SLRSS) project. The expanded wastewater treatment plant would not be constructed. The existing wastewater treatment plant would be decommissioned and effluent flow to Orchard Creek at this outfall location

Deleted: System

Deleted: Pumping and transmission facilities

Deleted: w

Deleted: collection and t

Deleted: f

Deleted: ies

Deleted: HYDROSCIENCE OPERATIONS, INC.

would cease.

The Discharger signed a Memorandum of Agreement (MOU) with the City of Lincoln on 15 July 2008. In the MOU, the City of Lincoln agrees to install a gravity sewer line that will enable the City of Lincoln to provide sewer service to the Discharger at the City of Lincoln Wastewater Treatment and Reclamation Facility. The Discharger agreed to connect to the gravity sewer line when it becomes available. To finance the cost of the gravity sewer line, it was anticipated in the MOU that an assessment district would be formed in which the Discharger, as well as other proposed users, would participate. This alternative is currently infeasible due to the lack of funding from other industrial and property owners to support the SLRSS project, as well as the lack of required easements and permits to construct the new gravity sewer line.

ii. Connection to the City of Lincoln Wastewater Treatment and Reclamation Facility Via a Temporary Force Main – A temporary force main required to convey 100 percent of the wastewater generated by the expanded casino and hotel facilities to the City of Lincoln Wastewater Treatment and Reclamation Facility would be constructed. The expanded wastewater treatment plant would not be constructed. The existing wastewater treatment plant would be decommissioned and effluent flow to Orchard Creek at this outfall location would cease. Pursuant to the MOU, the Discharger would connect to the gravity sewer line when it becomes available and transfer ownership of the temporary force main to the City of Lincoln.

An interim option was considered to connect to the City of Lincoln Wastewater Treatment and Reclamation Facility with a smaller diameter force main than that proposed for the SLRSS project. The MOU with the City of Lincoln states that, until the gravity sewer line is built, the City of Lincoln agrees to accept on an *interim* basis sewer flows from the Facility through a temporary force main. According to a 29 December 2009 letter from Placer County, the Discharger submitted preliminary design for construction of the force main on 23 May 2008. The plans were returned to the Discharger for minor revisions and signature on 14 October 2008. However, in weighing the costs and environmental impacts of the temporary force main and the increased discharge, the Discharger determined that a temporary connection to the City of Lincoln Wastewater Treatment and Reclamation Facility via a temporary force main is not a feasible alternative due to the high costs in relation to expansion of the treatment plant; failure of the temporary facility to meet the long-term needs of the Facility; lack of benefits to surrounding properties; high potential for odor due to excessive hydraulic retention time in the force main system; high power usage from pumping the wastewater a long distance; and the potential for spills if a force main break occurs.

Deleted: w

Deleted: t

Deleted: plant (WWTP)

Deleted: this option is infeasible

Deleted: ,

Deleted: ,

Deleted: ,

Deleted: ,

Deleted: ,

It should be noted that, while regionalization is beneficial in many ways, regionalizationwould not decrease the discharge from the Facility to

Deleted: Additionally, because the City of Lincoln WWTP discharges wastewater to Auburn Ravine, to which Orchard Creek is tributary, this option

Deleted: HYDROSCIENCE OPERATIONS, INC.

Deleted: change the discharge location

downstream receiving waters, but would simply move the discharge location directly to Auburn Ravine. The current NPDES Permit for the City of Lincoln Wastewater Treatment and Reclamation Facility (NPDES No. CA0084476, Order No. R5-2008-0156) does not include effluent limitations for zinc. Based on the effluent zinc data presented in Attachment G of the current NPDES Permit for the City of Lincoln Wastewater Treatment and Reclamation Facility (Order No. R5-2008-0156), effluent levels of zinc are as high as 60 µg/L, compared to the MEC of 89 µg/L at the Facility. Though the effluent levels of zinc at both facilities are comparable, stringent effluent limitation are established in this Order (10 µg/L and 20 µg/L as an AMEL and MDEL, respectively) based on the extremely low hardness of the effluent (12 mg/L).

iii. Connection to the Placer County Wastewater System – Pumping and transmission facilities required to convey 100 percent of the wastewater generated by the expanded casino and hotel facilities to the South Placer Wastewater Authority wastewater collection facilities, for ultimate treatment at the City of Roseville's Pleasant Grove Wastewater Treatment Plant (WWTP), would be constructed. The expanded wastewater treatment plant would not be constructed. The existing wastewater treatment plant would be decommissioned and effluent flow to Orchard Creek at this outfall location would cease.

This alternative is currently infeasible because the neither the existing sewer system nor the Pleasant Grove WWTP has sufficient capacity to accommodate the additional discharge from the Facility. Additional capacity at the Pleasant Grove WWTP will not be available until the next planned expansion is constructed. Because the next expansion is driven by future development, due to the economic recession, this date is currently unknown. Further, the Facility is outside the service area of the Pleasant Grove WWTP, and, as such, the City of Roseville is under no obligation to serve the Facility.

iv. Onsite Treatment/Disposal to Spray Fields – The expanded wastewater treatment plant would be constructed, and spray fields would be used for disposal of the treated effluent. Water would be applied to the spray fields at agronomic rates throughout the year. Tailwater and runoff would be captured and returned to the disposal area. Seasonal storage would be required.

This alternative is infeasible because the amount of land necessary to dispose of the effluent from the Facility is not available. A water balance was performed and determined that 64 acres of spray fields and a large seasonal storage basin would be required to dispose of the effluent from the Facility. This amount of land is not available on the 49-acre, developed property that the Facility is located on. The land surrounding the property is currently a wetland mitigation bank, open space with protected vernal pools, and land used or proposed for urban/industrial development.

v. Onsite treatment/Disposal to Leach Fields – The expanded wastewater treatment plant would be constructed, and conventional leach fields would be

Deleted: HYDROSCIENCE OPERATIONS, INC.

used for disposal of the treated effluent.

This alternative is infeasible due to incompatible soils conditions underlying the site and surrounding area, as well as the lack of available land.

vi. Additional Treatment to Remove Zinc – As described above, the proposed flow increase would result in the use of 20 percent of available assimilative capacity. The Discharger evaluated additional alternatives for reducing levels of zinc in the discharge. The Facility utilizes a state-of-the-art membrane bioreactor (MBR) treatment process with ultrafiltration membranes that provide the highest degree of filtration with the exception of reverse osmosis. Treating the effluent with reverse osmosis is not a feasible alternative due to the high capital costs of installing the treatment system, high operation and maintenance costs, high rates of power consumption, high rates of greenhouse gas generation associated with the construction and operation of a reverse osmosis treatment system, and disposal of the highly concentrated brine.

Deleted: and

Deleted: ing

Deleted: and

As part of the Discharger's 26 October 2009 infeasiblity report for zinc, the Discharger proposed a series of actions to address zinc in the discharge, including preparation of a Pollution Prevention Plan, chemical addition of passivation agents to coat the interior of distribution pipes to reduce corrosion, and chemical addition of precipitants to remove zinc. These measures, along with the current use of MBR technology, will provide best practical, treatment and control (BPTC) for the discharge.

The Discharger evaluated each of these alternatives in detail in the Thunder Valley WWTP Expansion Water/Wastewater Feasibility Study (Hydroscience Engineers, 2007), and further in supplemental information submitted to the Regional Water Board on 26 October 2009. As described above, the detailed analysis did not find that treatment at alternative facilities was feasible. The detailed analysis found that land disposal was not feasible because of local land use patterns and restrictions, widespread occurrence of vernal pools over the potential disposal site, and unsuitable soils. None of the feasible alternatives evaluated would substantially reduce or eliminate significant water quality impacts of the proposed action, because the proposed action would not significantly degrade water quality. Some of the alternatives may result in water quality effects elsewhere, or other environmental impacts, that are worse than those identified for the proposed action.

d. Socioeconomic Evaluation. The objective of the socioeconomic analysis was to determine if the lowering of Orchard Creek water quality is in the maximum interest of the people of the State. The socioeconomic evaluation considered the social benefits of the Facility expansion and resulting increase in flow to Orchard Creek, including increases in local employment, increases in taxes and fees paid to local agencies, increased support/patronage of local businesses, and availability of local community social and cultural resources. Without the expansion project, these numerous short- and long-term benefits to the United

Deleted: HYDROSCIENCE OPERATIONS, INC.

Auburn Indian Community, surrounding local communities, Placer County, and the State would not occur.

e. **Justification for Allowing Degradation.** Potential degradation identified in the Antidegradation Analysis due to this Order is justified by the following considerations:

i. Implementation of alternatives does not provide important socioeconomic benefit to the people of the region, nor do they provide maximum benefit to the people of the State. The alternatives to the proposed project would inhibit socioeconomic growth making it economically infeasible for any new development to occur.

ii. The Discharger's planned wastewater treatment facility will produce Title 22 tertiary treated effluent that will result in minimal water quality degradation. The Discharger's planned wastewater treatment process will meet or exceed the highest statutory and regulatory requirements which meets or exceeds BPTC;

iii. The Order is fully protective of beneficial uses of Orchard Creek. The anticipated water quality changes in Orchard Creek will not reduce or impair its designated beneficial uses and is consistent with State and federal antidegradation policies;

iv. No feasible alternatives currently exist to reduce the impacts available; and

v. The Discharger has fully satisfied the requirements of the intergovernmental coordination and public participation provisions of the State's continuing planning process concurrent with the public participation period of this Order.

5. Stringency of Requirements for Individual Pollutants

This Order contains both technology-based effluent limitations and WQBELs for individual pollutants. The technology-based effluent limitations consist of restrictions on BOD_5 and TSS. The WQBELs consist of restrictions on aluminum, ammonia, cadmium, chlorine residual, delta-BHC, electrical conductivity, endrin aldehyde, iron, lead, manganese, mercury, pH, total coliform organisms, and zinc. This Order's technology-based pollutant restrictions implement the minimum, applicable federal technology-based requirements. In addition, this Order includes effluent limitations for pathogens to meet numeric objectives or protect beneficial uses. The rationale for including these limitations is explained in the Fact Sheet. In addition, the Regional Water Board has considered the factors in CWC section 13241 in establishing these requirements.

WQBELs have been scientifically derived to implement water quality objectives that protect beneficial uses. Both the beneficial uses and the water quality objectives have been approved pursuant to federal law and are the applicable federal water quality standards. To the extent that toxic pollutant WQBELs were derived from the

Deleted: HYDROSCIENCE OPERATIONS, INC.

CTR, the CTR is the applicable standard pursuant to 40 CFR 131.38. The scientific procedures for calculating the individual WQBELs for priority pollutants are based on the CTR-SIP, which was approved by USEPA on 18 May 2000. All beneficial uses and water quality objectives contained in the Basin Plan were approved under state law and submitted to and approved by USEPA prior to 30 May 2000. Any water quality objectives and beneficial uses submitted to USEPA prior to 30 May 2000, but not approved by USEPA before that date, are nonetheless "applicable water quality standards for purposes of the CWA" pursuant to 40 CFR 131.21(c)(1). Collectively, this Order's restrictions on individual pollutants are no more stringent than required to implement the requirements of the CWA.

E. Interim Effluent Limitations – Not Applicable

F. Land Discharge Specifications – Not Applicable

G. Reclamation Specifications

The Discharger uses tertiary treated wastewater to irrigate on-site landscaping in the areas surrounding the Thunder Valley Casino and the Facility. In keeping with the intent of the Recycled Water Policy, this Order contains recycled water specifications consistent with WQO No. 2009-0006-DWQ. These requirements are necessary to ensure that the use of reclaimed water does not unreasonably affect present and anticipated beneficial uses of groundwater and surface water.

V. RATIONALE FOR RECEIVING WATER LIMITATIONS

Basin Plan water quality objectives to protect the beneficial uses of surface water and groundwater include numeric objectives and narrative objectives, including objectives for chemical constituents, toxicity, and tastes and odors. The toxicity objective requires that surface water and groundwater be maintained free of toxic substances in concentrations that produce detrimental physiological responses in humans, plants, animals, or aquatic life. The chemical constituent objective requires that surface water and groundwater shall not contain chemical constituents in concentrations that adversely affect any beneficial use or that exceed the maximum contaminant levels (MCLs) in Title 22, CCR. The tastes and odors objective states that surface water and groundwater shall not contain taste- or odor-producing substances in concentrations that cause nuisance or adversely affect beneficial uses. The Basin Plan requires the application of the most stringent objective necessary to ensure that surface water and groundwater do not contain chemical constituents, toxic substances, radionuclides, or taste and odor producing substances in concentrations that adversely affect domestic drinking water supply, agricultural supply, or any other beneficial use.

A. Surface Water

1. CWA section 303(a-c), requires states to adopt water quality standards, including criteria where they are necessary to protect beneficial uses. The Regional Water Board adopted water quality criteria as water quality objectives in the Basin Plan. The Basin Plan states that "[t]*he numerical and narrative water quality objectives*

Deleted: HYDROSCIENCE OPERATIONS, INC.

define the least stringent standards that the Regional Water Board will apply to regional waters in order to protect the beneficial uses." The Basin Plan includes numeric and narrative water quality objectives for various beneficial uses and water bodies. This Order contains receiving surface water limitations based on the Basin Plan numerical and narrative water quality objectives for bacteria, biostimulatory substances, color, chemical constituents, dissolved oxygen, floating material, oil and grease, pH, pesticides, radioactivity, suspended sediment, settleable substances, suspended material, tastes and odors, temperature, toxicity, and turbidity.

2. **Temperature.** Order No. R5-2005-0032 required the Discharger to conduct a study of the thermal impacts of the discharge on the beneficial uses of Orchard Creek to be submitted by 1 February 2006. The Discharger submitted their *Thermal Impact Report* in April 2006. Based on the study results, the Discharger concluded that the discharge does not cause a significant impact on beneficial uses, particularly aquatic life, in Orchard Creek or downstream waters. The Discharger found that thermal impacts from the discharge to fisheries and overall biota in Orchard Creek are less than significant. Based on the study results, the receiving water limitation requiring that the effluent shall not cause the ambient temperature to be increased more than 5°F is adequately protective and effluent limitations for temperature are not necessary. Therefore, this Order retains the receiving water limitation for temperature from Order No. R5-2005-0032, consistent with the water quality objective for temperature in the Basin Plan.

3. **pH.** According the Basin Plan, when determining compliance with the changes in normal ambient pH levels above 0.5 in fresh waters with designated COLD or WARM beneficial uses, appropriate averaging periods may be applied provided that beneficial uses will be fully protected. Order No. R5-2005-0032 allowed for the use of a monthly averaging period for determining compliance with the pH change objective. This Order carries forward the averaging period for determining compliance with the Basin Plan pH change objective.

B. Groundwater

1. The beneficial uses of the underlying ground water are municipal and domestic supply, industrial service supply, industrial process supply, and agricultural supply.

2. Basin Plan water quality objectives include narrative objectives for chemical constituents, tastes and odors, and toxicity of groundwater. The toxicity objective requires that groundwater be maintained free of toxic substances in concentrations that produce detrimental physiological responses in humans, plants, animals, or aquatic life. The chemical constituent objective states groundwater shall not contain chemical constituents in concentrations that adversely affect any beneficial use. The tastes and odors objective prohibits taste- or odor-producing substances in concentrations that cause nuisance or adversely affect beneficial uses. The Basin Plan also establishes numerical water quality objectives for chemical constituents and radioactivity in groundwaters designated as municipal supply. These include, at a minimum, compliance with MCLs in Title 22 of the CCR. The bacteria objective prohibits fecal coliform organisms at or above 2.2 MPN/100 mL. The Basin Plan

Deleted: HYDROSCIENCE OPERATIONS, INC.

requires the application of the most stringent objective necessary to ensure that waters do not contain chemical constituents, toxic substances, radionuclides, taste- or odor-producing substances, or bacteria in concentrations that adversely affect municipal or domestic supply, agricultural supply, industrial supply or some other beneficial use.

3. The Discharger contains all wastewater flows in systems that do not utilize land disposal. All wastewater is contained in treatment units. The wastewater collection and treatment systems do not threaten groundwater quality. Consistent with Order No. R5-2005-0032, this Order includes a groundwater limitation requiring that the discharge from the Facility shall not cause the underlying groundwater to be degraded.

VI. RATIONALE FOR MONITORING AND REPORTING REQUIREMENTS

40 CFR 122.48 requires that all NPDES permits specify requirements for recording and reporting monitoring results. Water Code sections 13267 and 13383 authorizes the Regional Water Board to require technical and monitoring reports. The Monitoring and Reporting Program (Attachment E) of this Order, establishes monitoring and reporting requirements to implement federal and state requirements. The following provides the rationale for the monitoring and reporting requirements contained in the Monitoring and Reporting Program for the Facility.

A. Influent Monitoring

1. Influent monitoring is required to collect data on the characteristics of the wastewater and to assess compliance with effluent limitations (e.g., BOD_5 and TSS percent reduction requirements). The monitoring frequencies for flow (continuous), BOD_5 (daily), and TSS (daily) have been retained from Order No. R5-2009-0032.

B. Effluent Monitoring

1. Pursuant to the requirements of 40 CFR 122.44(i)(2) effluent monitoring is required for all constituents with effluent limitations. Effluent monitoring is necessary to assess compliance with effluent limitations, assess the effectiveness of the treatment process, and to assess the impacts of the discharge on the receiving stream and groundwater.

2. Effluent monitoring frequencies and sample types for BOD_5 (daily), TSS (daily), electrical conductivity (three times per week), pH (daily), total coliform organisms (daily), flow (continuous), temperature (daily), and aluminum (monthly) have been retained from Order No. R5-2005-0032 to characterize the effluent and determine compliance with applicable effluent limitations.

3. Monitoring data collected over the existing permit term for settleable solids, copper, bromoform, dibromochloromethane, dichlorobromomethane, atrazine, boron, fluoride, arsenic, MBAS, nitrate, total trihalomethanes, sulfate, and persistent chlorinated hydrocarbon pesticides (except delta-BHC and endrin aldehyde) did not

Deleted: HYDROSCIENCE OPERATIONS, INC.

demonstrate reasonable potential to exceed water quality objectives/criteria. Thus, specific monitoring requirements for these parameters have not been retained from Order No. R5-2005-0032.

4. Order No. R5-2005-0032 established weekly monitoring for total dissolved solids. This Order requires effluent limitations for electrical conductivity, which is an indicator parameter for salinity, including total dissolved solids. Establishing effluent limitations for electrical conductivity is expected to effectively limit the constituents that contribute to salinity, including total dissolved solids. Thus, monitoring for total dissolved solids has been reduced from weekly to monthly.

5. Order No. R5-2005-0032 established continuous monitoring for chlorine residual. The Discharger does not use chlorine continuously; however, sodium hypochlorite is added into the backpulse flow during the period of the backpulse sequence to inhibit biogrowth in the membrane modules. Therefore, this Order requires the Discharger to monitor for chlorine residual continuously during periods when chlorine is being used in the treatment system.

6. Order No. R5-2005-0032 required the Discharger to monitor daily for both ionized and un-ionized ammonia. Because this Order requires effluent limitations for total ammonia (i.e., ionized) only, this Order discontinues the monitoring requirements for un-ionized ammonia.

7. This Order includes operational specifications for turbidity. (See Special Provisions VI.C.4.c. UV System Operating Specifications for turbidity specifications.) This Order moves the point of compliance from the final effluent after disinfection to an internal compliance point prior to disinfection. Therefore, monitoring for turbidity is required at Monitoring Location UVS-001 and effluent monitoring requirements have not been retained in this Order.

8. Monitoring data collected over the term of Order No. R5-2005-0032 for cadmium, delta-BHC, endrin aldehyde, lead, mercury, zinc, iron, and manganese indicates reasonable potential to exceed water quality criteria. Therefore, monthly effluent monitoring for these parameters has been established in this Order.

9. Order No. R5-2005-0032 established quarterly monitoring for hardness. This Order increases the monitoring frequency from quarterly to monthly in order to collect adequate information to determine protective aquatic life criteria for hardness-based metals.

10. Priority pollutant data for the effluent has been provided by the Discharger over the term of Order No. R5-2005-0032, and was used to conduct a meaningful RPA. In accordance with Section 1.3 of the SIP, periodic monitoring for priority pollutants for which criteria or objectives apply and for which no effluent limitations have been established. The monitoring frequency for priority pollutants has been reduced from semi-annually to quarterly during the third year of the permit term because the data provided during the term of Order No. R5-2005-0032 indicated no reasonable potential for those pollutants for which no WQBELs were established. Monitoring

Deleted: HYDROSCIENCE OPERATIONS, INC.

during the third year of the permit term will allow for the characterization of the effluent subsequent to the proposed upgrades to the Facility. See Attachment I for more detailed requirements related to performing priority pollutant monitoring.

C. Whole Effluent Toxicity Testing Requirements

1. **Acute Toxicity.** Quarterly 96-hour bioassay testing using grab samples, consistent with Order No. R5-2005-0032, is required to demonstrate compliance with the effluent limitation for acute toxicity.

2. **Chronic Toxicity.** Quarterly chronic whole effluent toxicity testing using 24-hour composite samples, consistent with Order No. R5-2005-0032, is required in order to demonstrate compliance with the Basin Plan's narrative toxicity objective.

D. Receiving Water Monitoring

1. **Surface Water**

   a. Receiving water monitoring is necessary to assess compliance with receiving water limitations and to assess the impacts of the discharge on the receiving stream.

   b. Receiving water monitoring frequencies (weekly) and sample types (grab) for dissolved oxygen, pH, turbidity, temperature, electrical conductivity, and fecal coliform have been retained from Order No. R5-2005-0032.

   c. Order No. R5-2005-0032 required the Discharger to monitor quarterly for both ionized and un-ionized ammonia. Because this Order requires effluent limitations for total ammonia (i.e., ionized) only, this Order discontinues the monitoring requirements for un-ionized ammonia.

   d. This Order requires monthly receiving water monitoring for hardness in order to collect adequate information to determine protective aquatic life criteria for hardness-based metals.

   e. Consistent with the effluent monitoring requirements, quarterly monitoring during the third year of the permit term for priority pollutants upstream of Discharge Point No. 001 at RSW-001 is required to collect the necessary data to determine reasonable potential as required in section 1.2 of the SIP. The hardness (as $CaCO_3$) of the upstream receiving water shall also be monitoring concurrently with the priority pollutants as well as pH to ensure the water quality criteria/objectives are correctly adjusted for the receiving water when determining reasonable potential as specified in section 1.3 of the SIP. See Attachment I for more detailed requirements related to performing priority pollutant monitoring.

Deleted: HYDROSCIENCE OPERATIONS, INC.

2. Groundwater – Not Applicable

E. Other Monitoring Requirements

1. Biosolids Monitoring

Biosolids monitoring is required to ensure compliance with the biosolids disposal requirements contained in Special Provision VI.C.5 of this Order. Biosolids disposal requirements are imposed pursuant to 40 CFR Part 503 to protect public health and prevent groundwater degradation.

2. Water Supply Monitoring

Water supply monitoring is required to evaluate the source of constituents in the wastewater. This Order increases the monitoring frequency from annually to quarterly for electrical conductivity and total dissolved solids to characterize contributions of salinity to the Facility.

3. Ultraviolet Disinfection System Monitoring

UV System specifications and monitoring and reporting is required to ensure that adequate UV dosage is applied to the wastewater to inactivate pathogens (e.g., viruses) in the wastewater. UV disinfection system monitoring requirements are imposed pursuant to requirements established by DPH and the National Water Research Institute (NWRI) and American Water Works Association Research Foundation NWRI/AWWARF's "*Ultraviolet Disinfection Guidelines for Drinking Water and Water Reuse"*.

4. Reclaimed Water Monitoring

A portion of the treated municipal wastewater is also recycled and used on-site. The specific recycled water use areas include irrigation of the landscaping surrounding the Thunder Valley Casino and the Facility. In keeping with the intent of the Recycled Water Policy, this Order contains recycled water monitoring and reporting requirements consistent with WQO No. 2009-0006-DWQ (General Waste Discharge Requirements for Landscape Irrigation Uses of Municipal Recycled Water). These requirements are necessary to ensure that the use of reclaimed water does not unreasonably affect present and anticipated beneficial uses of groundwater and surface water. Monitoring and reporting requirements include monthly reports on recycled water production and use, as well as annual reports in accordance with the requirements of Attachment M.

VII. RATIONALE FOR PROVISIONS

A. Standard Provisions

Standard Provisions, which apply to all NPDES permits in accordance with 40 CFR 122.41, and additional conditions applicable to specified categories of permits in accordance with 40 CFR 122.42, are provided in Attachment D. The Discharger must

Deleted: HYDROSCIENCE OPERATIONS, INC.

comply with all standard provisions and with those additional conditions that are applicable under 40 CFR 122.42.

40 CFR 122.41(a)(1) and (b) through (n) establish conditions that apply to all state-issued NPDES permits. These conditions must be incorporated into the permits either expressly or by reference. If incorporated by reference, a specific citation to the regulations must be included in the Order. 40 CFR 123.25(a)(12) allows the state to omit or modify conditions to impose more stringent requirements. In accordance with 40 CFR 123.25, this Order omits federal conditions that address enforcement authority specified in 40 CFR 122.41(j)(5) and (k)(2) because the enforcement authority under the CWC is more stringent. In lieu of these conditions, this Order incorporates by reference CWC section 13387(e).

B. Special Provisions

1. Reopener Provisions

a. **Mercury.** This provision allows the Regional Water Board to reopen this Order in the event mercury is found to be causing toxicity based on acute or chronic toxicity test results, or if a TMDL is adopted. In addition, this Order may be reopened if the Regional Water Board determines that a mercury offset program is feasible for dischargers subject to NPDES permits.

b. **Whole Effluent Toxicity.** This Order requires the Discharger to investigate the causes of, and identify corrective actions to reduce or eliminate effluent toxicity through a Toxicity Reduction Evaluation (TRE). This Order may be reopened to include a numeric chronic toxicity limitation, a new acute toxicity limitation, and/or a limitation for a specific toxicant identified in the TRE. Additionally, if a numeric chronic toxicity water quality objective is adopted by the State Water Board, this Order may be reopened to include a numeric chronic toxicity limitation based on that objective.

c. **Water Effects Ratio (WER) and Metal Translators.** Except for copper, a default WER of 1.0 has been used in this Order for calculating CTR criteria for applicable priority pollutant inorganic constituents. In addition, default dissolved-to-total metal translators have been used to convert water quality objectives from dissolved to total recoverable when developing effluent limitations for cadmium, lead and zinc. If the Discharger performs studies to determine site-specific WERs and/or site-specific dissolved-to-total metal translators, this Order may be reopened to modify the effluent limitations for the applicable inorganic constituents.

2. Special Studies and Additional Monitoring Requirements

a. **Chronic Whole Effluent Toxicity Requirements.** The Basin Plan contains a narrative toxicity objective that states, "*All waters shall be maintained free of toxic substances in concentrations that produce detrimental physiological responses in human, plant, animal, or aquatic life.*" (Basin Plan at page III-8.00.) Based on

Deleted: HYDROSCIENCE OPERATIONS, INC.

whole effluent chronic toxicity testing performed by the Discharger from January 2006 through December 2008, the discharge has reasonable potential to cause or contribute to an in-stream excursion above of the Basin Plan's narrative toxicity objective.

This provision requires the Discharger to develop a TRE Workplan in accordance with USEPA guidance. In addition, the provision provides a numeric toxicity monitoring trigger and requirements for accelerated monitoring, as well as, requirements for TRE initiation if a pattern of toxicity has been demonstrated.

Monitoring Trigger. A numeric toxicity monitoring trigger of >1 TUc (where TUc = 100/NOEC) is applied in the provision, because this Order does not allow any dilution for the chronic condition. Therefore, a TRE is triggered when the effluent exhibits a pattern of toxicity at 100 percent effluent.

Accelerated Monitoring. The provision requires accelerated WET testing when a regular WET test result exceeds the monitoring trigger. The purpose of accelerated monitoring is to determine, in an expedient manner, whether there is a pattern of toxicity before requiring the implementation of a TRE. Due to possible seasonality of the toxicity, the accelerated monitoring should be performed in a timely manner, preferably taking no more than 2 to 3 months to complete.

The provision requires accelerated monitoring consisting of four chronic toxicity tests in a 6-week period (i.e., one test every 2 weeks) using the species that exhibited toxicity. Guidance regarding accelerated monitoring and TRE initiation is provided in the *Technical Support Document for Water Quality-based Toxics Control,* EPA/505/2-90-001, March 1991 (TSD). The TSD at page 118 states, "*EPA recommends if toxicity is repeatedly or periodically present at levels above effluent limits more than 20 percent of the time, a TRE should be required.*" Therefore, four accelerated monitoring tests are required in this provision. If no toxicity is demonstrated in the four accelerated tests, then it demonstrates that toxicity is not present at levels above the monitoring trigger more than 20 percent of the time (only 1 of 5 tests are toxic, including the initial test). However, notwithstanding the accelerated monitoring results, if there is adequate evidence of a pattern of effluent toxicity (i.e., toxicity present exceeding the monitoring trigger more than 20 percent of the time), the Executive Officer may require that the Discharger initiate a TRE.

See the WET Accelerated Monitoring Flow Chart (Figure F-1), below, for further clarification of the accelerated monitoring requirements and for the decision points for determining the need for TRE initiation.

TRE Guidance. The Discharger is required to prepare a TRE Workplan in accordance with USEPA guidance. Numerous guidance documents are available, as identified below:

Deleted: HYDROSCIENCE OPERATIONS, INC.

- Toxicity Reduction Evaluation Guidance for Municipal Wastewater Treatment Plants, EPA/833-B-99/002, August 1999.
- Generalized Methodology for Conducting Industrial Toxicity Reduction Evaluations (TREs), EPA/600/2-88/070, April 1989.
- Methods for Aquatic Toxicity Identification Evaluations: Phase I Toxicity Characterization Procedures, Second Edition, EPA 600/6-91/003, February 1991.
- Toxicity Identification Evaluation: Characterization of Chronically Toxic Effluents, Phase I, EPA/600/6-91/005F, May 1992.
- Methods for Aquatic Toxicity Identification Evaluations: Phase II Toxicity Identification Procedures for Samples Exhibiting Acute and Chronic Toxicity, Second Edition, EPA/600/R-92/080, September 1993.
- Methods for Aquatic Toxicity Identification Evaluations: Phase III Toxicity Confirmation Procedures for Samples Exhibiting Acute and Chronic Toxicity, Second Edition, EPA 600/R-92/081, September 1993.
- Methods for Measuring the Acute Toxicity of Effluents and Receiving Waters to Freshwater and Marine Organisms, Fifth Edition, EPA-821-R-02-012, October 2002.
- Short-term Methods for Estimating the Chronic Toxicity of Effluents and Receiving Waters to Freshwater Organisms, Fourth Edition, EPA-821-R-02-013, October 2002.
- Technical Support Document for Water Quality-based Toxics Control, EPA/505/2-90-001, March 1991.

Deleted: HYDROSCIENCE OPERATIONS, INC.

Figure F-1
WET Accelerated Monitoring Flow Chart

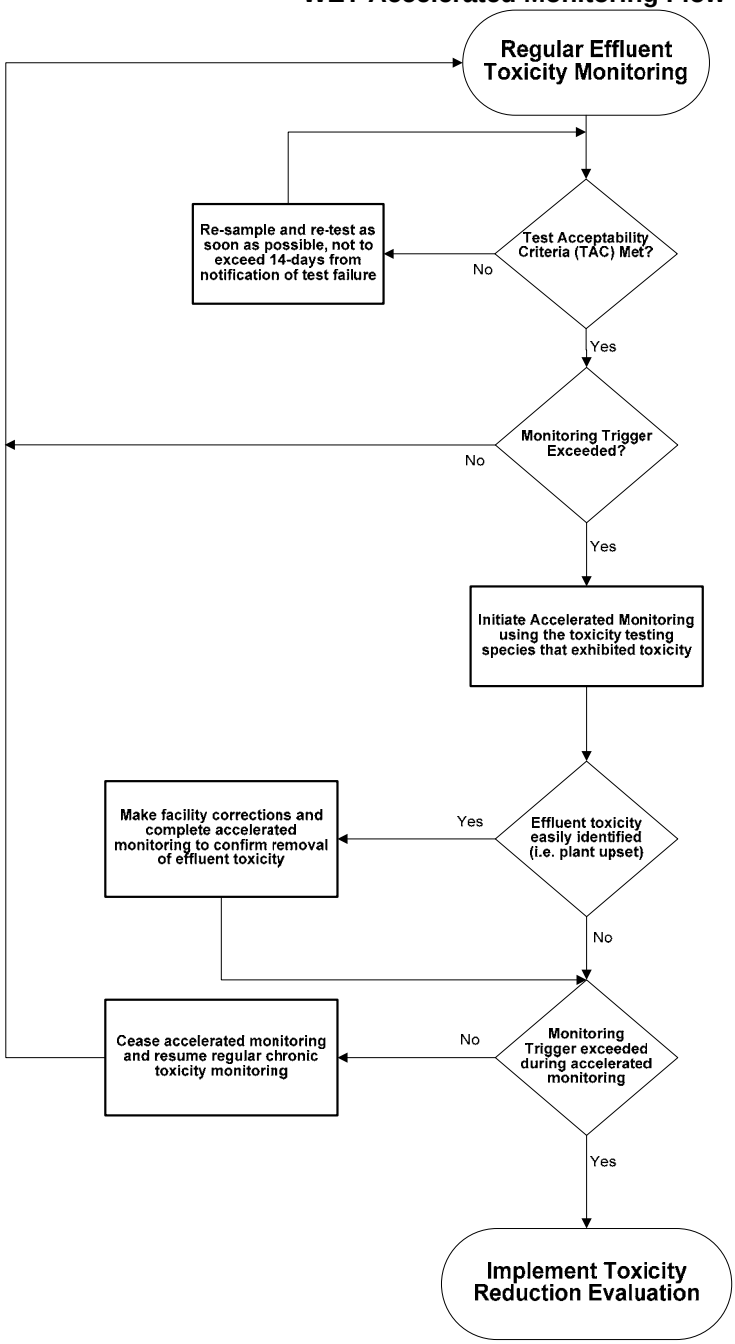

Deleted: HYDROSCIENCE OPERATIONS, INC.

3. **Best Management Practices and Pollution Prevention**

   a. **Salinity Evaluation and Minimization Plan.** An Evaluation and Minimization Plan for salinity is required in this Order to ensure adequate measures are developed and implemented by the Discharger to reduce the discharge of salinity to Orchard Creek. Order No. R5-2005-0032 contained a provision requiring the Discharger to "*use the best practicable cost-effective control technique currently available to limit mineralization to no more than a reasonable increment*." This requirement is not retained in this Order, however the development of a salinity evaluation and minimization plan should also ensure that mineralization is minimized.

4. **Construction, Operation, and Maintenance Specifications**

   a. Consistent with Order No. R5-2005-0032, this Order requires that the treatment facilities be designed, constructed, operated, and maintained to prevent inundation or washout due to floods with a 100-year return frequency.

   b. **Ultraviolet Disinfection (UV) System Operating Specifications.** UV disinfection system specifications and monitoring and reporting requirements are required to ensure that adequate UV dosage is applied to the wastewater to inactivate pathogens (e.g., viruses) in the wastewater. UV dosage is dependent on several factors such as UV transmittance, UV power setting, wastewater turbidity, and wastewater flow through the UV disinfection system. Monitoring and reporting of these parameters is necessary to determine compliance with minimum dosage requirements established by DPH and the National Water Research Institute (NWRI) and American Water Works Association Research Foundation NWRI/AWWARF's "*Ultraviolet Disinfection Guidelines for Drinking Water and Water Reuse*" first published in December 2000 revised as a Second Edition dated May 2003. In addition, a memorandum dated 1 November 2004 issued by DPH to Regional Water Board executive officers recommended that provisions be included in permits to water recycling treatment plants employing UV disinfection requiring dischargers to establish fixed cleaning frequency of quartz sleeves as well as include provisions that specify minimum delivered UV dose that must be maintained (as recommended by the NWRI/AWWARF UV Disinfection Guidelines).

      Turbidity is included as an operational specification as an indicator of the effectiveness of the treatment process and to assure compliance with effluent limitations for total coliform organisms. The tertiary treatment process utilized at this Facility is capable of reliably meeting a turbidity limitation of 2 nephelometric turbidity units (NTU) as a daily average. Failure of the treatment system such that virus removal is impaired would normally result in increased particles in the effluent, which result in higher effluent turbidity and could impact UV dosage. Turbidity has a major advantage for monitoring filter performance, allowing immediate detection of filter failure and rapid corrective action. The operational specification requires that turbidity prior to disinfection shall not exceed 2 NTU as

Deleted: HYDROSCIENCE OPERATIONS, INC.

a daily average; 5 NTU, more than 5 percent of the time within a 24-hour period, and an instantaneous maximum of 10 NTU.

Minimum UV dosage and turbidity specifications are included as operating criteria in section VI.C.4.b of this Order and section IX.C of the Monitoring and Reporting Program (Attachment E) to ensure that adequate disinfection of wastewater is achieved.

c. **Reclaimed Water.** A portion of the treated municipal wastewater is also recycled and used on-site. The specific recycled water use areas include irrigation of the landscaping surrounding the Thunder Valley Casino and the Facility. In keeping with the intent of the Recycled Water Policy, this Order contains recycled water provisions consistent with WQO No. 2009-0006-DWQ (General Waste Discharge Requirements for Landscape Irrigation Uses of Municipal Recycled Water). These provisions are necessary to ensure that the use of reclaimed water does not unreasonably affect present and anticipated beneficial uses of groundwater and surface water.

d. **Title 22 Requirements.** Consistent with Order No. R5-2005-0032, this Order requires that wastewater discharged to Orchard Creek be oxidized, coagulated, filtered, and adequately disinfected pursuant to Title 22 reclamation criteria to protect the beneficial uses of the receiving water.

5. **Special Provisions for Municipal Facilities (POTWs Only)**

a. **Sludge/Biosolids Requirements.** Sludge is dewatered by belt filter presses and is disposed off-site. This Order requires the Discharger to comply with sludge/biosolids discharge specifications, biosolids disposal requirements, and biosolids storage requirements.

b. **Continuous Monitoring Systems.** This permit, and the Monitoring and Reporting Program which is a part of this permit, requires that certain parameters be monitored on a continuous basis. The Facility is staffed from 7 a.m. to 1:30 a.m. daily and is unattended for 5.5 hours per day. Permit violations or system upsets can go undetected during this period. The Discharger is required to establish an electronic system for operator notification for continuous recording device alarms. The Discharger has a system in place to automatically contact Facility operators in the event of alarms generated at the wastewater treatment plant. The Discharger shall upgrade this system with future facility expansions/upgrades, as necessary, to ensure timely notification. For continuous monitoring systems installed following permit adoption, the notification system shall be installed simultaneously.

6. **Other Special Provisions**

a. **Facility Expansion.** The Discharger is planning to expand the Facility to treat up to 0.875 MGD. This Order includes requirements that must be met prior to an allowable increase in the flow rate.

Deleted: HYDROSCIENCE OPERATIONS, INC.

7. Compliance Schedules – Not Applicable

VIII. PUBLIC PARTICIPATION

The Regional Water Board is considering the issuance of WDRs that will serve as an NPDES permit for the Facility. As a step in the WDR adoption process, the Regional Water Board staff has developed tentative WDRs. The Regional Water Board encourages public participation in the WDR adoption process.

A. Notification of Interested Parties

The Regional Water Board has notified the Discharger and interested agencies and persons of its intent to prescribe waste discharge requirements for the discharge and has provided them with an opportunity to submit their written comments and recommendations. Notification was provided through by posting in public areas (the nearest courthouse or city hall, the post office nearest the Facility, and near the entrance of the Facility) by 16 November 2009.

B. Written Comments

The staff determinations are tentative. Interested persons are invited to submit written comments concerning these tentative WDRs. Comments must be submitted either in person or by mail to the Executive Office at the Regional Water Board at the address above on the cover page of this Order.

To be fully responded to by staff and considered by the Regional Water Board, written comments must be received at the Regional Water Board offices by 5:00 p.m. on **10 December 2009.**

C. Public Hearing

The Regional Water Board will hold a public hearing on the tentative WDRs during its regular Board meeting on the following date and time and at the following location:

Date:	27/28/29 January 2010
Time:	8:30 a.m.
Location:	Regional Water Quality Control Board, Central Valley Region 11020 Sun Center Dr., Suite #200 Rancho Cordova, CA 95670

Interested persons are invited to attend. At the public hearing, the Regional Water Board will hear testimony, if any, pertinent to the discharge, WDRs, and permit. Oral testimony will be heard; however, for accuracy of the record, important testimony should be in writing.

Please be aware that dates and venues may change. Our Web address is www.waterboards.ca.gov/centralvalley where you can access the current agenda for changes in dates and locations.

Deleted: HYDROSCIENCE OPERATIONS, INC.

D. Waste Discharge Requirements Petitions

Any aggrieved person may petition the State Water Board to review the decision of the Regional Water Board regarding the final WDRs. The petition must be submitted within 30 days of the Regional Water Board's action to the following address:

State Water Resources Control Board
Office of Chief Counsel
P.O. Box 100, 1001 I Street
Sacramento, CA 95812-0100

E. Information and Copying

The Report of Waste Discharge, related documents, tentative effluent limitations and special provisions, comments received, and other information are on file and may be inspected at the address above at any time between 8:30 a.m. and 4:45 p.m., Monday through Friday. Copying of documents may be arranged through the Regional Water Board by calling (916) 464-3291.

F. Register of Interested Persons

Any person interested in being placed on the mailing list for information regarding the NPDES permit should contact the Regional Water Board, reference this Facility, and provide a name, address, and phone number.

G. Additional Information

Requests for additional information or questions regarding this order should be directed to Diana Messina at (916) 464-4828.

Deleted: HYDROSCIENCE OPERATIONS, INC.

ATTACHMENT G – SUMMARY OF REASONABLE POTENTIAL ANALYSIS

Constituent	Units	MEC	B	C	CMC	CCC	Water & Org	Org. Only	Basin Plan	MCL	Reasonable Potential
Aluminum, Total Recoverable	µg/L	71	550	87	750[1]	87[2]	--	--	--	200	Yes
Ammonia Nitrogen, Total (as N)	mg/L	1.2	0.21	1.24	2.14[1]	1.24[3]	--	--	--	--	Yes
Antimony, Total Recoverable	µg/L	1.5	2.6	6	--	--	14	4,300	--	6	No
Arsenic, Total Recoverable	µg/L	2.8	2.8	10	340	150	--	--	--	10	No
Barium, Total Recoverable	µg/L	11	88	1,000	--	--	--	--	--	1,000	No
Beta-BHC	µg/L	<0.005	0.12	ND	--	--	0.014	0.046	ND	--	No
Boron, Total Recoverable	µg/L	180	37	700[4]	--	--	--	--	--	--	No
Cadmium, Total Recoverable	µg/L	0.24	<0.25	0.10[5]/1.4[6]	0.10[5]/2.0[6]	0.47[5]/1.4[6]	--	--	--	5	Yes
Chloride	µg/L	59,000	10,000	106,000[4]	--	--	--	--	--	250,000	No
Chlorine, Total Residual	mg/L	0.001	NA	0.011	0.019[1]	0.011[2]	--	--	--	--	Yes[7]
Chloroform	µg/L	0.49	<0.5	80	--	--	--	--	--	80	No
Chromium (Total)	µg/L	0.89	0.97	50	--	--	--	--	--	50	No
Copper, Total Recoverable	µg/L	16	3.6	37[5]/5.0[6]	47[5]/7.0[6]	37[5]/5.0[6]	1,300	--	--	1,000	No
Delta-BHC	µg/L	0.066	<0.005	ND	--	--	--	--	ND	--	Yes
Dichlorobromomethane	µg/L	0.2	<0.5	0.56	--	--	0.56	46	--	80	No
Di-n-butyl phthalate	µg/L	<5	4.6	2,700	--	--	2,700	12,000	--	--	No
Electrical Conductivity @ 25ºC	µmhos/cm	3,500	440	700[4]	--	--	--	--	--	900	Yes
Endrin Aldehyde	µg/L	0.18	<0.01	ND	--	--	0.76	0.81	ND	--	Yes
Fluoranthene	µg/L	0.082	0.066	300	--	--	300	370	--	--	No
Fluorene	µg/L	0.18	<0.2	1,300	--	--	1,300	14,000	--	--	No
Fluoride, Total	µg/L	470	290	2,000	--	--	--	--	--	2,000	No
Iron, Total Recoverable	µg/L	220[8]	780[8]	300	--	--	--	--	--	300	Yes
Lead, Total Recoverable	µg/L	1.1	0.94	0.06[5]/1.2[6]	1.5[5]/32[6]	0.06[5]/1.2[6]	--	--	--	15	Yes
Manganese, Total Recoverable	µg/L	10[8]	83[8]	50	--	--	--	--	--	50	Yes

Deleted: [1]
Deleted: [1]
Deleted: [1]
Deleted: [1]

Deleted: HYDROSCIENCE OPERATIONS, INC.

Constituent	Units	MEC	B	C	CMC	CCC	Water & Org	Org. Only	Basin Plan	MCL	Reasonable Potential
Mercury, Total Recoverable	µg/L	0.0022	0.00848	0.5	--	--	0.050	0.051	--	2	Yes[9]
Methylene Blue Active Substances	µg/L	57[8]	50[8]	500	--	--	--	--	--	500	No
Nickel, Total Recoverable	µg/L	3.2	5.9	8.7[5]/28[6]	78[5]/252[6]	8.7[5]/28[6]	610	4,600	--	100	No
Nitrate Nitrogen, Total (as N)	µg/L	6,700	560	10,000	--	--	--	--	--	10,000	No
Nitrite Nitrogen, Total (as N)	µg/L	45	27	1,000	--	--	--	--	--	1,000	No
Phenanthrene	µg/L	0.26	0.3	--	--	--	--	--	--	--	No
Phosphorus	µg/L	4,400	64	--	--	--	--	--	--	--	No
Selenium, Total Recoverable	µg/L	3	<5	5	20	5	--	--	--	20	No
Sulfate	µg/L	19,786[8]	8,000[8]	250,000	--	--	--	--	--	250,000	No
Sulfide	µg/L	<1,000	2,000	--	--	--	--	--	--	--	No
Sulfite	µg/L	2,000	1,300	--	--	--	--	--	--	--	No
Thallium, Total Recoverable	µg/L	0.12	<1	1.7	--	--	1.7	6.3	--	2	No
Total Dissolved Solids	µg/L	560,000	120,000	450,000[4]	--	--	--	--	--	500,000	No
Total Trihalomethanes[10]	µg/L	4	<0.5	80	--	--	--	--	--	80	No
Zinc, Total Recoverable	µg/L	89	7.4	20[5]/64[6]	20[5]/64[6]	20[5]/64[6]	--	--	--	5,000	Yes

Deleted: [8]

Deleted: [1]

Deleted: [1]

Deleted: [1]

Deleted: [1]

Deleted: [9]

Deleted: HYDROSCIENCE OPERATIONS, INC.

Constituent	Units	MEC	B	C	CMC	CCC	Water & Org	Org. Only	Basin Plan	MCL	Reasonable Potential

MEC = Maximum Effluent Concentration
B = Maximum Receiving Water Concentration or lowest detection level, if non-detect
C = Criterion used for Reasonable Potential Analysis
CMC = Criterion Maximum Concentration (CTR or NTR)
CCC = Criterion Continuous Concentration (CTR or NTR)
Water & Org = Human Health Criterion for Consumption of Water & Organisms (CTR or NTR)
Org. Only = Human Health Criterion for Consumption of Organisms Only (CTR or NTR)
Basin Plan = Numeric Site-specific Basin Plan Water Quality Objective
MCL = Drinking Water Standards Maximum Contaminant Level
NA = Not Available
ND = Non-detect

Footnotes:
(1) USEPA National Recommended Ambient Water Quality Criteria, Freshwater Aquatic Life Protection, 1-hour Average.
(2) USEPA National Recommended Ambient Water Quality Criteria, Freshwater Aquatic Life Protection, 4-day Average.
(3) USEPA National Recommended Ambient Water Quality Criteria, Freshwater Aquatic Life Protection, 30-day Average.
(4) Water Quality for Agriculture.
(5) Criterion to be compared to the maximum effluent concentration.
(6) Criterion to be compared to the maximum upstream receiving water concentration.
(7) Due to the existing chlorine use and the potential for chlorine to be discharged, the discharge has a reasonable potential to cause or contribute to an in-stream excursion above the National Ambient Water Quality Criteria.
(8) Represents the maximum observed annual average concentration for comparison with the Secondary MCL.
(9) The Sacramento River from Knights Landing to the Delta, downstream of the discharge, is listed on the 2006 303(d) list as impaired for mercury. Therefore, this Order establishes a final, monthly average mass loading limitation for mercury.
(10) Total trihalomethanes is the sum of bromoform, bromodichloromethane, chloroform, and dibromochloromethane.

Deleted: HYDROSCIENCE OPERATIONS, INC.

ATTACHMENT H – CALCULATION OF WQBELS

Parameter	Units	Most Stringent Criteria			Dilution Factors			Human Health Calculations		
		HH	CMC	CCC	HH	CMC	CCC	ECA_{HH} = $AMEL_{HH}$	AMEL/MDEL $Multiplier_{HH}$	$MDEL_{HH}$
Aluminum, Total Recoverable	µg/L	200	750	87	--	--	--	200	1.69	339
Ammonia Nitrogen, Total (as N)	mg/L	--	2.14	1.24	--	--	--	--	--	--
Cadmium, Total Recoverable	µg/L	5.0	0.10[1]/2.0[2]	0.47[1]/1.4[2]	--	--	--	5.0	2.01	10
Lead, Total Recoverable	µg/L	15	1.5[1]/32[2]	0.06[1]/1.2[2]	--	--	--	15	2.01	30
Zinc, Total Recoverable	µg/L	5,000	20[1]/64[2]	20[1]/64[2]	--	--	--	5,000	2.01	10,031

[1] Criterion to be compared to the maximum effluent concentration.
[2] Criterion to be compared to the maximum upstream receiving water concentration.

Deleted: HYDROSCIENCE OPERATIONS, INC.

Parameter	Units	Aquatic Life Calculations											Final Limitations	
		ECA_{acute}	ECA $Multiplier_{acute}$	LTA_{Acute}	$ECA_{chronic}$	ECA $Multiplier_{chronic}$	$LTA_{chronic}$	Lowest LTA	AMEL $Multiplier_{95}$	$AMEL_{AL}$	MDEL $Multiplier_{99}$	$MDEL_{AL}$	AMEL	MDEL
Aluminum, Total Recoverable	µg/L	750	0.43	324	87	0.64	55	55	1.37	76	2.32	128	76	128
Ammonia Nitrogen, Total (as N)	mg/L	2.14	0.32	0.68	1.24	0.78	0.97	0.68	1.55	1.1	3.11	2.1	1.1	2.1
Cadmium, Total Recoverable	µg/L	0.10[3]	0.32	0.03	0.47[3]	0.53	0.25	0.03	1.55	0.05	3.11	0.10	0.05	0.10
Lead, Total Recoverable	µg/L	1.5[3]	0.32	0.48	0.06[3]	0.53	0.03	0.03	1.55	0.05	3.11	0.10	0.05	0.10
Zinc, Total Recoverable	µg/L	20[3]	0.32	6.4	20[3]	0.53	11	6.4	1.55	10	3.11	20	10	20

[3] ECA determined as described in section IV.C.2.c.ii of the Fact Sheet (Attachment F).

Deleted: HYDROSCIENCE OPERATIONS, INC.

ATTACHMENT I – EFFLUENT AND RECEIVING WATER CHARACTERIZATION STUDY

I. Background. Sections 2.4.1 through 2.4.4 of the SIP provide minimum standards for analyses and reporting. (Copies of the SIP may be obtained from the State Water Resources Control Board, or downloaded from http://www.waterboards.ca.gov/iswp/index.html). To implement the SIP, effluent and receiving water data are needed for all priority pollutants. Effluent and receiving water pH and hardness are required to evaluate the toxicity of certain priority pollutants (such as heavy metals) where the toxicity of the constituents varies with pH and/or hardness. Section 3 of the SIP prescribes mandatory monitoring of dioxin congeners. In addition to specific requirements of the SIP, the Regional Water Board is requiring the following monitoring:

A. Drinking water constituents. Constituents for which drinking water Maximum Contaminant Levels (MCLs) have been prescribed in the California Code of Regulation are included in the *Water Quality Control Plan, Fourth Edition, for the Sacramento and San Joaquin River Basins* (Basin Plan). The Basin Plan defines virtually all surface waters within the Central Valley Region as having existing or potential beneficial uses for municipal and domestic supply. The Basin Plan further requires that, at a minimum, water designated for use as domestic or municipal supply shall not contain concentrations of chemical constituents in excess of the MCLs contained in the California Code of Regulations.

B. Effluent and receiving water temperature. This is both a concern for application of certain temperature-sensitive constituents, such as fluoride, and for compliance with the Basin Plan's thermal discharge requirements.

C. Effluent and receiving water hardness and pH. These are necessary because several of the CTR constituents are hardness and pH dependent.

D. Dioxin and furan sampling. Section 3 of the SIP has specific requirements for the collection of samples for analysis of dioxin and furan congeners, which are detailed in Attachment J. Pursuant to Section 13267 of the California Water Code, this Order includes a requirement for the Discharger to submit monitoring data for the effluent and receiving water as described in Attachment J.

II. Monitoring Requirements.

A. Quarterly Monitoring. Quarterly priority pollutant samples shall be collected from the effluent and upstream receiving water (Monitoring Locations EFF-001 and RSW-001) and analyzed for the constituents listed in Table I-1. Quarterly monitoring shall be conducted during the 3rd year of the permit term for 1 year (four consecutive samples, evenly distributed throughout the year) and the results of such monitoring be submitted to the Regional Water Board, during the fourth year of the permit term. Each individual monitoring event shall provide representative sample results for the effluent and upstream receiving water.

Deleted: HYDROSCIENCE OPERATIONS, INC.

B. Semi-annual Monitoring (dioxins and furans only). Semi-annual monitoring is required for dioxins and furans, as specified in Attachment J. The results of dioxin and furan monitoring shall be submitted to the Regional Water Board with the quarterly priority pollutant data at the completion of the Effluent and Receiving Water Characterization Study, and during the fourth year of the permit term.

C. Concurrent Sampling. Effluent and receiving water sampling shall be performed at approximately the same time, on the same date.

D. Sample type. All effluent samples shall be taken as 24-hour flow proportioned composite samples. All receiving water samples shall be taken as grab samples.

Table I-1. Priority Pollutants

CTR #	Constituent	CAS Number	Controlling Water Quality Criterion for Surface Waters		Criterion Quantitation Limit ug/L or noted	Suggested Test Methods
			Basis	Criterion Concentration ug/L or noted[1]		
VOLATILE ORGANICS						
28	1,1-Dichloroethane	75343	Primary MCL	5	0.5	EPA 8260B
30	1,1-Dichloroethene	75354	National Toxics Rule	0.057	0.5	EPA 8260B
41	1,1,1-Trichloroethane	71556	Primary MCL	200	0.5	EPA 8260B
42	1,1,2-Trichloroethane	79005	National Toxics Rule	0.6	0.5	EPA 8260B
37	1,1,2,2-Tetrachloroethane	79345	National Toxics Rule	0.17	0.5	EPA 8260B
75	1,2-Dichlorobenzene	95501	Taste & Odor	10	0.5	EPA 8260B
29	1,2-Dichloroethane	107062	National Toxics Rule	0.38	0.5	EPA 8260B
	cis-1,2-Dichloroethene	156592	Primary MCL	6	0.5	EPA 8260B
31	1,2-Dichloropropane	78875	Calif. Toxics Rule	0.52	0.5	EPA 8260B
101	1,2,4-Trichlorobenzene	120821	Public Health Goal	5	0.5	EPA 8260B
76	1,3-Dichlorobenzene	541731	Taste & Odor	10	0.5	EPA 8260B
32	1,3-Dichloropropene	542756	Primary MCL	0.5	0.5	EPA 8260B
77	1,4-Dichlorobenzene	106467	Primary MCL	5	0.5	EPA 8260B
17	Acrolein	107028	Aquatic Toxicity	21	2	EPA 8260B
18	Acrylonitrile	107131	National Toxics Rule	0.059	2	EPA 8260B
19	Benzene	71432	Primary MCL	1	0.5	EPA 8260B
20	Bromoform	75252	Calif. Toxics Rule	4.3	0.5	EPA 8260B
34	Bromomethane	74839	Calif. Toxics Rule	48	1	EPA 8260B
21	Carbon tetrachloride	56235	National Toxics Rule	0.25	0.5	EPA 8260B
22	Chlorobenzene (mono chlorobenzene)	108907	Taste & Odor	50	0.5	EPA 8260B
24	Chloroethane	75003	Taste & Odor	16	0.5	EPA 8260B
25	2- Chloroethyl vinyl ether	110758	Aquatic Toxicity	122 (3)	1	EPA 8260B
26	Chloroform	67663	OEHHA Cancer Risk	1.1	0.5	EPA 8260B
35	Chloromethane	74873	USEPA Health Advisory	3	0.5	EPA 8260B

Deleted: HYDROSCIENCE OPERATIONS, INC.

CTR #	Constituent	CAS Number	Controlling Water Quality Criterion for Surface Waters		Criterion Quantitation Limit ug/L or noted	Suggested Test Methods
			Basis	Criterion Concentration ug/L or noted[1]		
23	Dibromochloromethane	124481	Calif. Toxics Rule	0.41	0.5	EPA 8260B
27	Dichlorobromomethane	75274	Calif. Toxics Rule	0.56	0.5	EPA 8260B
36	Dichloromethane	75092	Calif. Toxics Rule	4.7	0.5	EPA 8260B
33	Ethylbenzene	100414	Taste & Odor	29	0.5	EPA 8260B
88	Hexachlorobenzene	118741	Calif. Toxics Rule	0.00075	1	EPA 8260B
89	Hexachlorobutadiene	87683	National Toxics Rule	0.44	1	EPA 8260B
91	Hexachloroethane	67721	National Toxics Rule	1.9	1	EPA 8260B
94	Naphthalene	91203	USEPA IRIS	14	10	EPA 8260B
38	Tetrachloroethene	127184	National Toxics Rule	0.8	0.5	EPA 8260B
39	Toluene	108883	Taste & Odor	42	0.5	EPA 8260B
40	trans-1,2-Dichloroethylene	156605	Primary MCL	10	0.5	EPA 8260B
43	Trichloroethene	79016	National Toxics Rule	2.7	0.5	EPA 8260B
44	Vinyl chloride	75014	Primary MCL	0.5	0.5	EPA 8260B
	Methyl-tert-butyl ether (MTBE)	1634044	Secondary MCL	5	0.5	EPA 8260B
	Trichlorofluoromethane	75694	Primary MCL	150	5	EPA 8260B
	1,1,2-Trichloro-1,2,2-Trifluoroethane	76131	Primary MCL	1200	10	EPA 8260B
	Styrene	100425	Taste & Odor	11	0.5	EPA 8260B
	Xylenes	1330207	Taste & Odor	17	0.5	EPA 8260B
SEMI-VOLATILE ORGANICS						
60	1,2-Benzanthracene	56553	Calif. Toxics Rule	0.0044	5	EPA 8270C
85	1,2-Diphenylhydrazine	122667	National Toxics Rule	0.04	1	EPA 8270C
45	2-Chlorophenol	95578	Taste and Odor	0.1	2	EPA 8270C
46	2,4-Dichlorophenol	120832	Taste and Odor	0.3	1	EPA 8270C
47	2,4-Dimethylphenol	105679	Calif. Toxics Rule	540	2	EPA 8270C
49	2,4-Dinitrophenol	51285	National Toxics Rule	70	5	EPA 8270C
82	2,4-Dinitrotoluene	121142	National Toxics Rule	0.11	5	EPA 8270C
55	2,4,6-Trichlorophenol	88062	Taste and Odor	2	10	EPA 8270C
83	2,6-Dinitrotoluene	606202	USEPA IRIS	0.05	5	EPA 8270C
50	2-Nitrophenol	25154557	Aquatic Toxicity	150 (5)	10	EPA 8270C
71	2-Chloronaphthalene	91587	Aquatic Toxicity	1600 (6)	10	EPA 8270C
78	3,3'-Dichlorobenzidine	91941	National Toxics Rule	0.04	5	EPA 8270C
62	3,4-Benzofluoranthene	205992	Calif. Toxics Rule	0.0044	10	EPA 8270C
52	4-Chloro-3-methylphenol	59507	Aquatic Toxicity	30	5	EPA 8270C
48	4,6-Dinitro-2-methylphenol	534521	National Toxics Rule	13.4	10	EPA 8270C
51	4-Nitrophenol	100027	USEPA Health Advisory	60	5	EPA 8270C
69	4-Bromophenyl phenyl ether	101553	Aquatic Toxicity	122	10	EPA 8270C

Deleted: HYDROSCIENCE OPERATIONS, INC.

CTR #	Constituent	CAS Number	Controlling Water Quality Criterion for Surface Waters		Criterion Quantitation Limit ug/L or noted	Suggested Test Methods
			Basis	Criterion Concentration ug/L or noted[1]		
72	4-Chlorophenyl phenyl ether	7005723	Aquatic Toxicity	122 (3)	5	EPA 8270C
56	Acenaphthene	83329	Taste and Odor	20	1	EPA 8270C
57	Acenaphthylene	208968	No Criteria Available		10	EPA 8270C
58	Anthracene	120127	Calif. Toxics Rule	9,600	10	EPA 8270C
59	Benzidine	92875	National Toxics Rule	0.00012	5	EPA 8270C
61	Benzo(a)pyrene (3,4-Benzopyrene)	50328	Calif. Toxics Rule	0.0044	0.1	EPA 8270C
63	Benzo(g,h,i)perylene	191242	No Criteria Available		5	EPA 8270C
64	Benzo(k)fluoranthene	207089	Calif. Toxics Rule	0.0044	2	EPA 8270C
65	Bis(2-chloroethoxy) methane	111911	No Criteria Available		5	EPA 8270C
66	Bis(2-chloroethyl) ether	111444	National Toxics Rule	0.031	1	EPA 8270C
67	Bis(2-chloroisopropyl) ether	39638329	Aquatic Toxicity	122 (3)	10	EPA 8270C
68	Bis(2-ethylhexyl) phthalate	117817	National Toxics Rule	1.8	3	EPA 8270C
70	Butyl benzyl phthalate	85687	Aquatic Toxicity	3 (7)	10	EPA 8270C
73	Chrysene	218019	Calif. Toxics Rule	0.0044	5	EPA 8270C
81	Di-n-butylphthalate	84742	Aquatic Toxicity	3 (7)	10	EPA 8270C
84	Di-n-octylphthalate	117840	Aquatic Toxicity	3 (7)	10	EPA 8270C
74	Dibenzo(a,h)-anthracene	53703	Calif. Toxics Rule	0.0044	0.1	EPA 8270C
79	Diethyl phthalate	84662	Aquatic Toxicity	3 (7)	2	EPA 8270C
80	Dimethyl phthalate	131113	Aquatic Toxicity	3 (7)	2	EPA 8270C
86	Fluoranthene	206440	Calif. Toxics Rule	300	10	EPA 8270C
87	Fluorene	86737	Calif. Toxics Rule	1300	10	EPA 8270C
90	Hexachlorocyclopentadiene	77474	Taste and Odor	1	1	EPA 8270C
92	Indeno(1,2,3-c,d)pyrene	193395	Calif. Toxics Rule	0.0044	0.05	EPA 8270C
93	Isophorone	78591	National Toxics Rule	8.4	1	EPA 8270C
98	N-Nitrosodiphenylamine	86306	National Toxics Rule	5	1	EPA 8270C
96	N-Nitrosodimethylamine	62759	National Toxics Rule	0.00069	5	EPA 8270C
97	N-Nitrosodi-n-propylamine	621647	Calif. Toxics Rule	0.005	5	EPA 8270C
95	Nitrobenzene	98953	National Toxics Rule	17	10	EPA 8270C
53	Pentachlorophenol	87865	Calif. Toxics Rule	0.28	0.2	EPA 8270C
99	Phenanthrene	85018	No Criteria Available		5	EPA 8270C
54	Phenol	108952	Taste and Odor	5	1	EPA 8270C
100	Pyrene	129000	Calif. Toxics Rule	960	10	EPA 8270C
INORGANICS						
	Aluminum	7429905	Ambient Water Quality	87	50	EPA 6020/200.8
1	Antimony	7440360	Primary MCL	6	5	EPA 6020/200.8
2	Arsenic	7440382	Ambient Water Quality	0.018	0.01	EPA 1632

Deleted: HYDROSCIENCE OPERATIONS, INC.

CTR #	Constituent	CAS Number	Controlling Water Quality Criterion for Surface Waters		Criterion Quantitation Limit ug/L or noted	Suggested Test Methods
			Basis	Criterion Concentration ug/L or noted[1]		
15	Asbestos	1332214	National Toxics Rule/ Primary MCL	7 MFL	0.2 MFL >10um	EPA/600/R-93/116(PCM)
	Barium	7440393	Basin Plan Objective	100	100	EPA 6020/200.8
3	Beryllium	7440417	Primary MCL	4	1	EPA 6020/200.8
4	Cadmium	7440439	Public Health Goal	0.07	0.25	EPA 1638/200.8
5a	Chromium (total)	7440473	Primary MCL	50	2	EPA 6020/200.8
5b	Chromium (VI)	18540299	Public Health Goal	0.2	0.5	EPA 7199/1636
6	Copper	7440508	National Toxics Rule	4.1 (2)	0.5	EPA 6020/200.8
14	Cyanide	57125	National Toxics Rule	5.2	5	EPA 9012A
	Fluoride	7782414	Public Health Goal	1000	0.1	EPA 300
	Iron	7439896	Secondary MCL	300	100	EPA 6020/200.8
7	Lead	7439921	Calif. Toxics Rule	0.92 (2)	0.5	EPA 1638
8	Mercury	7439976	TMDL Development		0.0002 (11)	EPA 1669/1631
	Manganese	7439965	Secondary MCL/ Basin Plan Objective	50	20	EPA 6020/200.8
9	Nickel	7440020	Calif. Toxics Rule	24 (2)	5	EPA 6020/200.8
10	Selenium	7782492	Calif. Toxics Rule	5 (8)	5	EPA 6020/200.8
11	Silver	7440224	Calif. Toxics Rule	0.71 (2)	1	EPA 6020/200.8
12	Thallium	7440280	National Toxics Rule	1.7	1	EPA 6020/200.8
	Tributyltin	688733	Ambient Water Quality	0.063	0.002	EV-024/025
13	Zinc	7440666	Calif. Toxics Rule/ Basin Plan Objective	54/ 16 (2)	10	EPA 6020/200.8
PESTICIDES - PCBs						
110	4,4'-DDD	72548	Calif. Toxics Rule	0.00083	0.02	EPA 8081A
109	4,4'-DDE	72559	Calif. Toxics Rule	0.00059	0.01	EPA 8081A
108	4,4'-DDT	50293	Calif. Toxics Rule	0.00059	0.01	EPA 8081A
112	alpha-Endosulfan	959988	National Toxics Rule	0.056 (9)	0.02	EPA 8081A
103	alpha-Hexachlorocyclohexane (BHC)	319846	Calif. Toxics Rule	0.0039	0.01	EPA 8081A
	Alachlor	15972608	Primary MCL	2	1	EPA 8081A
102	Aldrin	309002	Calif. Toxics Rule	0.00013	0.005	EPA 8081A
113	beta-Endosulfan	33213659	Calif. Toxics Rule	0.056 (9)	0.01	EPA 8081A
104	beta-Hexachlorocyclohexane	319857	Calif. Toxics Rule	0.014	0.005	EPA 8081A
107	Chlordane	57749	Calif. Toxics Rule	0.00057	0.1	EPA 8081A
106	delta-Hexachlorocyclohexane	319868	No Criteria Available		0.005	EPA 8081A
111	Dieldrin	60571	Calif. Toxics Rule	0.00014	0.01	EPA 8081A
114	Endosulfan sulfate	1031078	Ambient Water Quality	0.056	0.05	EPA 8081A
115	Endrin	72208	Calif. Toxics Rule	0.036	0.01	EPA 8081A
116	Endrin Aldehyde	7421934	Calif. Toxics Rule	0.76	0.01	EPA 8081A

Deleted: HYDROSCIENCE OPERATIONS, INC.

CTR #	Constituent	CAS Number	Controlling Water Quality Criterion for Surface Waters		Criterion Quantitation Limit ug/L or noted	Suggested Test Methods
			Basis	Criterion Concentration ug/L or noted[1]		
117	Heptachlor	76448	Calif. Toxics Rule	0.00021	0.01	EPA 8081A
118	Heptachlor Epoxide	1024573	Calif. Toxics Rule	0.0001	0.01	EPA 8081A
105	Lindane (gamma-Hexachlorocyclohexane)	58899	Calif. Toxics Rule	0.019	0.019	EPA 8081A
119	PCB-1016	12674112	Calif. Toxics Rule	0.00017 (10)	0.5	EPA 8082
120	PCB-1221	11104282	Calif. Toxics Rule	0.00017 (10)	0.5	EPA 8082
121	PCB-1232	11141165	Calif. Toxics Rule	0.00017 (10)	0.5	EPA 8082
122	PCB-1242	53469219	Calif. Toxics Rule	0.00017 (10)	0.5	EPA 8082
123	PCB-1248	12672296	Calif. Toxics Rule	0.00017 (10)	0.5	EPA 8082
124	PCB-1254	11097691	Calif. Toxics Rule	0.00017 (10)	0.5	EPA 8082
125	PCB-1260	11096825	Calif. Toxics Rule	0.00017 (10)	0.5	EPA 8082
126	Toxaphene	8001352	Calif. Toxics Rule	0.0002	0.5	EPA 8081A
	Atrazine	1912249	Public Health Goal	0.15	1	EPA 8141A
	Bentazon	25057890	Primary MCL	18	2	EPA 643/ 515.2
	Carbofuran	1563662	CDFG Hazard Assess.	0.5	5	EPA 8318
	2,4-D	94757	Primary MCL	70	10	EPA 8151A
	Dalapon	75990	Ambient Water Quality	110	10	EPA 8151A
	1,2-Dibromo-3-chloropropane (DBCP)	96128	Public Health Goal	0.0017	0.01	EPA 8260B
	Di(2-ethylhexyl)adipate	103231	USEPA IRIS	30	5	EPA 8270C
	Dinoseb	88857	Primary MCL	7	2	EPA 8151A
	Diquat	85007	Ambient Water Quality	0.5	4	EPA 8340/ 549.1/HPLC
	Endothal	145733	Primary MCL	100	45	EPA 548.1
	Ethylene Dibromide	106934	OEHHA Cancer Risk	0.0097	0.02	EPA 8260B/504
	Glyphosate	1071836	Primary MCL	700	25	HPLC/EPA 547
	Methoxychlor	72435	Public Health Goal	30	10	EPA 8081A
	Molinate (Ordram)	2212671	CDFG Hazard Assess.	13	2	EPA 634
	Oxamyl	23135220	Public Health Goal	50	20	EPA 8318/632
	Picloram	1918021	Primary MCL	500	1	EPA 8151A
	Simazine (Princep)	122349	USEPA IRIS	3.4	1	EPA 8141A
	Thiobencarb	28249776	Basin Plan Objective/ Secondary MCL	1	1	HPLC/EPA 639
16	2,3,7,8-TCDD (Dioxin)	1746016	Calif. Toxics Rule	1.30E-08	5.00E-06	EPA 8290 (HRGC) MS
	2,4,5-TP (Silvex)	93765	Ambient Water Quality	10	1	EPA 8151A
	Diazinon	333415	CDFG Hazard Assess.	0.05	0.25	EPA 8141A/GCMS
	Chlorpyrifos	2921882	CDFG Hazard Assess.	0.014	1	EPA 8141A/GCMS
OTHER CONSTITUENTS						
	Ammonia (as N)	7664417	Ambient Water Quality	1500 (4)		EPA 350.1

Deleted: HYDROSCIENCE OPERATIONS, INC.

CTR #	Constituent	CAS Number	Controlling Water Quality Criterion for Surface Waters		Criterion Quantitation Limit ug/L or noted	Suggested Test Methods
			Basis	Criterion Concentration ug/L or noted[1]		
	Chloride	16887006	Agricultural Use	106,000		EPA 300.0
	Flow			1 CFS		
	Hardness (as $CaCO_3$)			5000		EPA 130.2
	Foaming Agents (MBAS)		Secondary MCL	500		SM5540C
	Nitrate (as N)	14797558	Primary MCL	10,000	2,000	EPA 300.0
	Nitrite (as N)	14797650	Primary MCL	1000	400	EPA 300.0
	pH		Basin Plan Objective	6.5-8.5	0.1	EPA 150.1
	Phosphorus, Total (as P)	7723140	USEPA IRIS	0.14		EPA 365.3
	Specific conductance (EC)		Agricultural Use	700 umhos/cm		EPA 120.1
	Sulfate		Secondary MCL	250,000	500	EPA 300.0
	Sulfide (as S)		Taste and Odor	0.029		EPA 376.2
	Sulfite (as SO_3)		No Criteria Available			SM4500-SO3
	Temperature		Basin Plan Objective	°F		
	Total Disolved Solids (TDS)		Agricultural Use	450,000		EPA 160.1

FOOTNOTES:

(1) - The Criterion Concentrations serve only as a point of reference for the selection of the appropriate analytical method. They do not indicate a regulatory decision that the cited concentration is either necessary or sufficient for full protection of beneficial uses. Available technology may require that effluent limits be set lower than these values.

(2) - Freshwater aquatic life criteria for metals are expressed as a function of total hardness (mg/L) in the water body. Values displayed correspond to a total hardness of 40 mg/L.

(3) - For haloethers

(4) - Freshwater aquatic life criteria for ammonia are expressed as a function of pH and temperature of the water body. Values displayed correspond to pH 8.0 and temperature of 22°C.

(5) - For nitrophenols.

(6) - For chlorinated naphthalenes.

(7) - For phthalate esters.

(8) - Basin Plan objective = 2 ug/L for Salt Slough and specific constructed channels in the Grassland watershed.

(9) - Criteria for sum of alpha- and beta- forms.

(10) - Criteria for sum of all PCBs.

(11) - Mercury monitoring shall utilize "ultra-clean" sampling and analytical methods. These methods include:

Method 1669: Sampling Ambient Water for Trace Metals at USEPA Water Quality Criteria Levels, USEPA; and

Method 1631: Mercury in Water by Oxidation, Purge and Trap, and Cold Vapor Atomic Fluoresence, USEPA

III. Additional Study Requirements

A. Laboratory Requirements. The laboratory analyzing the monitoring samples shall be certified by the Department of Health Services in accordance with the provisions of Water Code 13176 and must include quality assurance/quality control data with their reports (ELAP certified). In the event a certified laboratory is not available to the Discharger, analyses performed by a noncertified laboratory will be accepted provided

Deleted: HYDROSCIENCE OPERATIONS, INC.

the laboratory institutes a Quality Assurance-Quality Control Program. A manual containing the steps followed in this program must be kept in the laboratory and must be available for inspection by Regional Water Board staff. The Quality Assurance-Quality Control Program must conform to USEPA guidelines or to procedures approved by the Regional Water Board.

B. Criterion Quantitation Limit (CQL). The criterion quantitation limits will be equal to or lower than the minimum levels (MLs) in Appendix 4 of the SIP or the detection limits for purposes of reporting (DLRs) below the controlling water quality criterion concentrations summarized in Table I-1 of this Order. In cases where the controlling water quality criteria concentrations are below the detection limits of all approved analytical methods, the best available procedure will be utilized that meets the lowest of the MLs and DLR. Table I-1 contains suggested analytical procedures. The Discharger is not required to use these specific procedures as long as the procedure selected achieves the desired minimum detection level.

C. Method Detection Limit (MDL). The method detection limit for the laboratory shall be determined by the procedure found in 40 CFR Part 136, Appendix B (revised as of May 14, 1999).

D. Reporting Limit (RL). The reporting limit for the laboratory. This is the lowest quantifiable concentration that the laboratory can determine. Ideally, the RL should be equal to or lower than the CQL to meet the purposes of this monitoring.

E. Reporting Protocols. The results of analytical determinations for the presence of chemical constituents in a sample shall use the following reporting protocols:

1. 1. Sample results greater than or equal to the reported RL shall be reported as measured by the laboratory (i.e., the measured chemical concentration in the sample).

2. Sample results less than the reported RL, but greater than or equal to the laboratory's MDL, shall be reported as "Detected, but Not Quantified," or DNQ. The estimated chemical concentration of the sample shall also be reported.

3. For the purposes of data collection, the laboratory shall write the estimated chemical concentration next to DNQ as well as the words "Estimated Concentration" (may shortened to "Est. Conc.). The laboratory, if such information is available, may include numerical estimates of the data quantity for the reported result. Numerical estimates of data quality may be percent accuracy (+ or – a percentage of the reported value), numerical ranges (low and high), or any other means considered appropriate by the laboratory.

4. Sample results that are less than the laboratory's MDL shall be reported as "Not Detected" or ND.

F. Data Format. The monitoring report shall contain the following information for each pollutant:

Deleted: HYDROSCIENCE OPERATIONS, INC.

1. The name of the constituent.
2. Sampling location.
3. The date the sample was collected.
4. The time the sample was collected.
5. The date the sample was analyzed. For organic analyses, the extraction data will also be indicated to assure that hold times are not exceeded for prepared samples.
6. The analytical method utilized.
7. The measured or estimated concentration.
8. The required Criterion Quantitation Limit (CQL).
9. The laboratory's current Method Detection Limit (MDL), as determined by the procedure found in 40 CFR Part 136, Appendix B (revised as of May 14, 1999).
10. The laboratory's lowest reporting limit (RL).
11. Any additional comments.

Deleted: HYDROSCIENCE OPERATIONS, INC.

ATTACHMENT J – DIOXIN AND FURAN SAMPLING

The CTR includes criteria for 2,3,7,8-tetrachlorodibenzo-pdioxin (2,3,7,8-TCDD). In addition to this compound, there are many congeners of chlorinated dibenzodioxins (2,3,7,8-CDDs) and chlorinated dibenzofurans (2,3,7,8-CDFs) that exhibit toxic effects similar to those of 2,3,7,8-TCDD. The USEPA has published toxic equivalency factors (TEFs) for 17 of the congeners. The TEFs express the relative toxicities of the congeners compared to 2,3,7,8-TCDD (whose TEF equals 1.0). In June 1997, participants in a World Health Organization (WHO) expert meeting revised TEF values for 1,2,3,7,8-PentaCDD, OctaCDD, and OctaCDF. The current TEFs for the 17 congeners, which include the three revised values, are shown below:

Toxic Equivalency Factors (TEFs) for 2,3,7,8-TCDD Equivalents

Congener	TEF
2,3,7,8-TetraCDD	1
1,2,3,7,8-PentaCDD	1.0
1,2,3,4,7,8-HexaCDD	0.1
1,2,3,6,7,8-HexaCDD	0.1
1,2,3,7,8,9-HexaCDD	0.1
1,2,3,4,6,7,8-HeptaCDD	0.01
OctaCDD	0.0001
2,3,7,8-TetraCDF	0.1
1,2,3,7,8-PentaCDF	0.05
2,3,4,7,8-PentaCDF	0.5
1,2,3,4,7,8-HexaCDF	0.1
1,2,3,6,7,8-HexaCDF	0.1
1,2,3,7,8,9-HexaCDF	0.1
2,3,4,6,7,8-HexaCDF	0.1
1,2,3,4,6,7,8-HeptaCDF	0.01
1,2,3,4,7,8,9-HeptaCDF	0.01
OctaCDF	0.0001

The Discharger shall conduct effluent and receiving water monitoring for the 2,3,7,8-TCDD congeners listed above to assess the presence and amounts of the congeners being discharged and already present in the receiving water. Effluent and upstream receiving water shall be monitored for the presence of the 17 congeners once during dry weather and once during wet weather for 1 year within the term of the study.

The Discharger shall report, for each congener, the analytical results of the effluent and receiving water monitoring, including the quantifiable limit and the method detection limit, and the measured or estimated concentration.

In addition, the Discharger shall multiply each measured or estimated congener concentration by its respective TEF value and report the sum of these values.

Deleted: HYDROSCIENCE OPERATIONS, INC.

ATTACHMENT K – RECYCLED WATER USE SIGNAGE

Deleted: HYDROSCIENCE OPERATIONS, INC.

ATTACHMENT L – BEST MANAGEMENT PRACTICES FOR RECYCLED WATER

This menu of potential Best Management Practices (BMPs) identifies some practices for the management of the production, distribution, and use of recycled water that, in addition to requirements in law[1], will help ensure the safe and efficient use of recycled water. Many of these BMPs are also intended to minimize or eliminate conditions that cause runoff, ponding, and windblown spray (drift). Recycled Water Specification IV.C.15 requires the Discharger to implement the Required BMPs identified in Section I and to consider implementing other BMPs (Sections II – IV) as appropriate for the recycled water use area.

I. REQUIRED BMPs

A. Implementation of operations and management plan that provides for detection of leaks, and correction either within 72 hours of learning of a leak, or prior to the release of 1,000 gallons.

B. Proper design and operation of sprinkler heads.

C. Refraining from application during precipitation events.

D. Management of any impoundment such that no discharge occurs unless the discharge is a result of a 25-year, 24-hour storm event or greater. In the event of an unauthorized discharge, the Executive Officer of the appropriate Regional Water Board shall be notified, as described in the Monitoring and Reporting Program (Attachment E, section X.D.6.

II. OTHER POTENTIAL BMPS: GENERAL OPERATIONAL CONTROLS

A. The Recycled Water Use Supervisor attends regular training regarding the safe and efficient operation and maintenance of recycled water use facilities.

B. The Recycled Water Use Supervisor ensures that all recycled water facilities are maintained, operated and repaired at all times in a manner that does not cause illness or injury to any person and in a manner that does not cause damage or injury to the real or personal property of any person or entity.

C. Where feasible, different piping materials are used to assist in water system identification.

III. OTHER POTENTIAL BMPS: WORKER/PUBLIC PROTECTION

A. Workers, residents, and the public are made aware of the potential health risks associated with contact or ingestion of recycled water, and are educated about proper hygienic practices to protect themselves and their families.

[1] Water Code, Health and Safety Code, California Code of Regulations, etc.

Deleted: HYDROSCIENCE OPERATIONS, INC.

B. Workers are provided with the appropriate safety equipment and clothing during prolonged contact with recycled water.

C. Potable drinking water is provided for workers.

D. Toilet and washing facilities are provided.

E. Precautions are taken to avoid contact of recycled water with food and food is not allowed into areas that are still wet with recycled water.

F. A first aid kit is available on site, to prevent the contact of cuts and other injuries with recycled water.

IV. OTHER POTENTIAL BMPS: EFFICIENT IRRIGATION

Hardware:

A. All irrigation systems have the appropriate equipment/hardware for the application.

B. Irrigation system is installed according to the design.

C. Irrigation system is designed to provide as much flexibility as possible for the operation of the irrigation system.

D. All sprinkler heads are uniform in brand, model and nozzle size. Where different arcs are needed at the same station, match precipitation rates by changing nozzles.

E. Sprinkler heads placed per manufacturer's recommendations and based on measured spacing between sprinkler heads.

F. Where lower precipitation rates are required, such as on slopes, reduced nozzle size and spray angle per manufacturer's recommendations.

G. Installed booster pumps to increase pressure where needed.

H. Installed pressure reducers to decrease pressure where needed.

I. Pipes sized to convey water in the quantity required by the system.

J. Check valves installed either in-line or built into the sprinkler head assembly to minimize low head drainage after the valve has closed.

K. Automatic flow control devices installed that shut down a system if a break or other similar high flow/low pressure situation develops during irrigation.

L. Use centralized control systems or controllers that measure or can be programmed to use evaporation rates, or systems that use controls such as moisture sensors.

Deleted: HYDROSCIENCE OPERATIONS, INC.

Maintenance:

M. Routinely adjust sprinkler heads so they achieve 80% head to head coverage throughout their intended arc. There are no obstructions that would interfere with the free rotation and smooth operation of any sprinkler, (e.g., trees, tall grass, shrubs, signs). The system is routinely tested so adjustments can be made.

N. Routinely adjust valves or pressure regulators so that the systems are operating at the pressure required by the sprinkler heads or emitters. Routinely test pressures periodically with a pressure gauge to maintain appropriate pressure levels.

O. Routinely test the accuracy of time clocks and recalibrate or repair as necessary.

P. Repair or replace broken risers, sprinklers, valves, etc. as soon as they are discovered; replace with appropriate make and model of equipment to maintain uniformity throughout the system.

Q. Routinely check backflow devices, pumps, etc. for leaks and repair or replace as necessary.

R. Routinely clean screens and backwash filters to keep systems operating optimally.

Management:

S. Determine the optimum duration and frequency for irrigation cycles considering evapotranspiration, soil type, plant varieties being irrigated, climatic conditions, and any other factors affecting optimum irrigation efficiencies.

T. Irrigation with recycled water only occurs during periods of minimal public use of the Use Area with consideration given to allow an adequate dry-out time before the Use Area will be used by the public.

U. The frequency of respective irrigation cycles is only as often as necessary to meet the water requirements of the landscape. This is determined by measuring the amount of moisture remaining in the root zone reservoir between irrigation cycles. Moisture levels in the root zone is measured and optimized via the use of tensiometers, gypsum blocks, soil probes, the “feel method”, an on-site weather station, and or the California Irrigation Management Information System (CIMIS) to estimate soil moisture levels. These methods are reviewed, inspected, and maintained regularly to ensure accuracy and reliability.

V. Use automatic rain shut-off devices to reduce irrigation if significant rainfall occurs.

W. Use multiple rain shut-off devices to reduce ponding if precipitation rate is higher than the infiltration rate of the soil.

X. Majority of irrigation occurs in the evening or early morning to avoid the heat and/or windy parts of the day.

Deleted: HYDROSCIENCE OPERATIONS, INC.

Y. Irrigate areas grouped into zones of similar water use.

Z. As needed, aerate the soil to improve infiltration of air and water into the soil.

AA. Perform good horticultural practices; fertilization, mowing, de-thatching, aeration, and pest control, as necessary to create the best growing environment for landscape vegetation.

BB. Provide infiltration areas at the lowest elevation of the Use Area.

CC. Install storm drain inlet valves or plugs to contain accidental discharges during dry weather.

DD. Implement low impact development practices to minimize runoff that contains recycled water.

EE. Employ water budgeting using evapotranspiration data from CIMIS or an on-site weather station and crop coefficients from Water Use Classification of Landscape Species (WUCOLS).

FF. Dedicate landscape water meters for monitoring of water budget and leak detection.

GG. Conform to local or the State Water Efficient Landscape Ordinance.

HH. Educate residents, customers and employees regarding the importance of efficient water use.

II. Each site supervisor has been provided a conductivity tester as a tool to help them determine the difference between recycled water and potable water.

Deleted: HYDROSCIENCE OPERATIONS, INC.

ATTACHMENT M – ANNUAL RECYCLED WATER REPORT

Describe approved amendments to the approved Title 22 Engineering Report. Include copies of approval letter(s) prepared by USEPA regarding such amendments to the Title 22 Engineering Report, if any.

Deleted: the California Department of Public Health (DPH)

Provide a description of new use sites approved by USEPA. The description shall include information necessary for USEPA to evaluate new use sites pursuant to the Title 22 Requirements. Examples of necessary information may include location of backflow prevention devices, drinking fountains, groundwater wells, etc.

Deleted: DPH

Deleted: DPH

Describe the nature, extent, and cause of any exceedances of turbidity or disinfection standards, if any. Discuss corrective actions taken or planned to resolve the exceedances of turbidity or disinfection standards.

PERIOD INSPECTIONS OF RECYCLED WATER USE AREA

Cross-connection Prevention

Recycled Water Use Area Name	Date of Inspection(s) for cross-connection prevention:	Description of violations identified, if any:	Actions taken or planned for correcting violations:

Agronomic Rate Evaluation

Average Agronomic Demand (lbs/acre/year)	Average Nitrogen application (lbs/acre/year)

Corrective actions taken to ensure recycled water use occurs at reasonable agronomic rates