CALIFORNIA REGIONAL WATER QUALITY CONTROL BOARD

CENTRAL VALLEY REGION

11020 Sun Center Drive, #200 Rancho Cordova, California 95670-6114

Phone (916) 464-3291 • Fax (916) 464-4645

http://www.waterboards.ca.gov/centralvalley

ORDER R5-2012-XXXX

NPDES NO. CA0079651

WASTE DISCHARGE REQUIREMENTS FOR THE LINDA COUNTY WATER DISTRICT WASTEWATER TREATMENT PLANT YUBA COUNTY AND SUTTER COUNTY

The following Discharger is subject to waste discharge requirements as set forth in this Order:

Table 1. Discharger Information

Discharger	Linda County Water District
Name of Facility	Wastewater Treatment Plant
Facility Address	909 Myrna Avenue
	Marysville, CA 95901
	Yuba County and Sutter County
The U.S. Environmental Protection Agency (USEPA) and the Regional Water Quality Control Board have classified this discharge as a major discharge.	

The discharge by the Linda County Water District from the discharge points identified below is subject to waste discharge requirements as set forth in this Order:

Table 2. Discharge Location

Discharge Point	Effluent Description	Discharge Point Latitude	Discharge Point Longitude	Receiving Water
001	Treated municipal wastewater	39º 05’ 42” N	121º 35’ 32” W	Feather River
002	Treated municipal wastewater	39º 05’ 42” N	121º 35’ 20” W	Feather River, via evaporation/ percolation ponds within floodplain

Table 3. Administrative Information

This Order was adopted by the Regional Water Quality Control Board on:	**<Adoption Date>**
This Order shall become effective on:	**50 days after the Adoption Date of this Order[1]**
This Order shall expire on:	**<Expiration Date>**
The Discharger shall file a Report of Waste Discharge in accordance with title 23, California Code of Regulations, as application for issuance of new waste discharge requirements no later than:	**<180 days prior to the Order expiration date OR insert date>**

[1] pH Effluent Limitations in Section IV.A.1.a., Table 6 shall become effective on the Adoption Date of this Order. Accordingly, pH Limitations in Section IV.A.1. of Order R5-2006-0096 are immediately rescinded on the Adoption Date of this Order.

I, **Pamela C. Creedon**, Executive Officer, do hereby certify that this Order with all attachments is a full, true, and correct copy of an Order adopted by the California Regional Water Quality Control Board, Central Valley Region, on **<Adoption Date>**.

_____

PAMELA C. CREEDON, Executive Officer

Table of Contents

I. Facility Information 6
II. Findings 7
III. Discharge Prohibitions 15
IV. Effluent Limitations and Discharge Specifications 16
A. Effluent Limitations - Discharge Point Nos. 001 and 002 16
B. Land Discharge Specifications - Discharge Point No. 002 24
C. Reclamation Specifications - Not Applicable 24
V. Receiving Water Limitations 24
A. Surface Water Limitations 24
B. Groundwater Limitations 28
VI. Provisions 28
A. Standard Provisions 28
B. Monitoring and Reporting Program Requirements 34
C. Special Provisions 34
1. Reopener Provisions 34
2. Special Studies, Technical Reports and Additional Monitoring Requirements 37
3. Best Management Practices and Pollution Prevention 41
4. Construction, Operation and Maintenance Specifications 41
5. Special Provisions for Municipal Facilities (POTWs Only) 42
6. Other Special Provisions 47
7. Compliance Schedules - Not Applicable 48
VII. Compliance Determination 49

List of Tables

Table 1. Discharger Information 1
Table 2. Discharge Location 1
Table 3. Administrative Information 2
Table 4. Facility Information 6

Table 5. Basin Plan Beneficial Uses 10
Table 6. Effluent Limitations - Discharge Point No. 002 (1.8 MGD)..... 16
Table 7. Effluent Limitations - Discharge Point No. 001 and 002 (5.0 MGD)..... 18
Table 8. Effluent Limitations - Discharge Point No. 001 and 002 (6.7 MGD)..... 21

List of Attachments

Attachment A - Definitions A-1
Attachment B - Maps B-1
Attachment C - Flow Schematic C-1
Attachment D - Standard Provisions D-1
Attachment E - Monitoring and Reporting Program E-1
Attachment F - Fact Sheet F-1
Attachment G - Summary of Reasonable Potential Analysis G-1
Attachment H - Calculation of WQBELs H-1
Attachment I - Effluent and Receiving Water Characterization Study I-1

I. FACILITY INFORMATION

The following Discharger is subject to waste discharge requirements as set forth in this Order:

Table 4. Facility Information

Discharger	Linda County Water District
Name of Facility	Wastewater Treatment Plant
Facility Address	909 Myrna Avenue
	Marysville, CA 95901
	Yuba County and Sutter County
Facility Contact, Title, and Phone	Doug Lofton, General Manager, (530) 743-2043
Mailing Address	1280 Scales Street, Marysville, CA 95901
Type of Facility	Publically Owned Treatment Works (POTW)
Facility Design Flow	Existing Plant - 1.8 million gallons per day (MGD) Upgraded Plant - 5.0 MGD Upgraded and Regionalized Plant - 6.7 MGD

II. FINDINGS

The California Regional Water Quality Control Board, Central Valley Region (hereinafter Central Valley Water Board), finds:

A. Background. Linda County Water District (hereinafter Discharger) is currently discharging pursuant to Order No. R5-2006-0096 and National Pollutant Discharge Elimination System (NPDES) Permit No. CA0079651. The Discharger submitted a Report of Waste Discharge, dated 11 May 2011, and applied for a NPDES permit renewal to discharge up to 6.7 MGD of treated wastewater from the Linda County Water District Wastewater Treatment Plant, hereinafter Facility. The application was deemed complete on 9 August 2011.

For the purposes of this Order, references to the "discharger" or "permittee" in applicable federal and state laws, regulations, plans, or policy are held to be equivalent to references to the Discharger herein.

B. Facility Description. The Discharger owns and operates a POTW. The existing treatment system consists of the headworks, two primary clarifiers, trickling filter, secondary clarifier, chlorine contact basin, and dechlorination. Wastewater is discharged via a series of seven percolation ponds that lie within the Feather River floodplain at Discharge Point No. 002 (see table on cover page) to the Feather River, a water of the United States, within the Lower Feather watershed. The Discharger is currently upgrading and expanding the Facility to provide tertiary treatment for up to 5.0 MGD. The upgraded and expanded treatment system will consist of a headworks, two rectangular primary clarifiers, four air activated sludge basins (including nitrification and denitrification), two secondary clarifiers, compressible media filters, chlorine contact basin, and dechlorination. Upon completion of the upgrades, wastewater may be discharged at Discharge Point No. 002 to the percolation ponds or at Discharge Point No. 001 (see table on cover page) directly to the Feather River. The Discharger is also planning a regionalization project with the City of Marysville that will increase the Facility's capacity to accommodate an additional 1.7 MGD, for a total average dry weather flow of

6.7 MGD. Attachment B provides a map of the area around the Facility. Attachment C provides a flow schematic of the Facility.

C. **Legal Authorities.** This Order is issued pursuant to section 402 of the Clean Water Act (CWA) and implementing regulations adopted by USEPA and chapter 5.5, division 7 of the California Water Code (Water Code; commencing with section 13370). It shall serve as a NPDES permit for point source discharges from this facility to surface waters. This Order also serves as Waste Discharge Requirements (WDRs) pursuant to article 4, chapter 4, division 7 of the Water Code (commencing with section 13260).

D. **Background and Rationale for Requirements.** The Central Valley Water Board developed the requirements in this Order based on information submitted as part of the application, through monitoring and reporting programs, and other available information. The Fact Sheet (Attachment F), which contains background information and rationale for Order requirements, is hereby incorporated into this Order and constitutes part of the Findings for this Order. Attachments A through E and G through I are also incorporated into this Order.

E. **California Environmental Quality Act (CEQA).** Under Water Code section 13389, this action to adopt an NPDES permit is exempt from the provisions of CEQA, Public Resources Code sections 21100-21177.

F. **Technology-based Effluent Limitations.** Section 301(b) of the CWA and implementing USEPA permit regulations at section 122.44, title 40 of the Code of Federal Regulations (40 CFR 122.44), require that permits include conditions meeting applicable technology-based requirements at a minimum, and any more stringent effluent limitations necessary to meet applicable water quality standards. The discharge authorized by this Order must meet minimum federal technology-based requirements based on Secondary Treatment Standards at 40 CFR Part 133. A detailed discussion of the technology-based effluent limitations development is included in the Fact Sheet.

G. **Water Quality-based Effluent Limitations (WQBELs).** Section 301(b) of the CWA and 40 CFR 122.44(d) require that permits include limitations more stringent than applicable

federal technology-based requirements where necessary to achieve applicable water quality standards. This Order contains requirements, expressed as technology equivalence requirements, which are necessary to achieve water quality standards. The Central Valley Water Board has considered the factors listed in Water Code section 13241 in establishing these requirements. The rationale for these requirements, which consist of tertiary treatment or equivalent requirements, is discussed in the Fact Sheet.

40 CFR 122.44(d)(1)(i) mandates that permits include effluent limitations for all pollutants that are or may be discharged at levels that have the reasonable potential to cause or contribute to an exceedance of a water quality standard, including numeric and narrative objectives within a standard. Where reasonable potential has been established for a pollutant, but there is no numeric criterion or objective for the pollutant, WQBELs must be established using: (1) USEPA criteria guidance under CWA section 304(a), supplemented where necessary by other relevant information; (2) an indicator parameter for the pollutant of concern; or (3) a calculated numeric water quality criterion, such as a proposed state criterion or policy interpreting the state's narrative criterion, supplemented with other relevant information, as provided in 40 CFR 122.44(d)(1)(vi).

H. Water Quality Control Plans. The Central Valley Water Board adopted a *Water Quality Control Plan*, *Fourth Edition (Revised October 2011),* for the Sacramento and San Joaquin River Basins (hereinafter Basin Plan) that designates beneficial uses, establishes water quality objectives, and contains implementation programs and policies to achieve those objectives for all waters addressed through the plan. In addition, the Basin Plan implements State Water Resources Control Board (State Water Board) Resolution No. 88-63, which established state policy that all waters, with certain exceptions, should be considered suitable or potentially suitable for municipal or domestic supply. Beneficial uses applicable to Feather River are as follows:

Table 5. Basin Plan Beneficial Uses

Discharge Point	Receiving Water Name	Beneficial Use(s)
001 and 002	Feather River	Existing: Municipal and domestic supply (MUN); Agricultural supply, including irrigation (AGR); Water contact recreation, including canoeing and rafting (REC-1); Non-contact water recreation (REC-2); Warm freshwater habitat (WARM); Cold freshwater habitat (COLD); Migration of aquatic organisms, warm and cold (MIGR); Spawning, reproduction, and/or early development, warm and cold (SPWN); and Wildlife habitat (WILD).
002	Groundwater	Existing: Municipal and domestic supply (MUN); Agricultural supply, including irrigation and stock watering (AGR); Industrial process supply (PROC); and Industrial service supply (IND).

The Basin Plan includes a list of Water Quality Limited Segments (WQLSs), which are defined as "*…those sections of lakes, streams, rivers or other fresh water bodies where water quality does not meet (or is not expected to meet) water quality standards even after the application of appropriate limitations for point sources (40 CFR 130, et seq.).*" The Basin Plan also states, "*Additional treatment beyond minimum federal standards will be imposed on dischargers to WQLSs. Dischargers will be assigned or allocated a maximum allowable load of critical pollutants so that water quality objectives can be met in the segment.*" The Lower Feather River is listed on the 303(d) list as impaired for chlorpyrifos, Group A pesticides, mercury, polychlorinated biphenyls (PCBs), and unknown toxicity.

Requirements of this Order implement the Basin Plan.

I. **National Toxics Rule (NTR) and California Toxics Rule (CTR).** USEPA adopted the NTR on 22 December 1992, and later amended it on 4 May 1995 and 9 November 1999. About 40 criteria in the NTR applied in California. On 18 May 2000, USEPA adopted the CTR. The CTR promulgated new toxics criteria for California and, in addition, incorporated the previously adopted NTR criteria that were applicable in the state. The CTR was amended on 13 February 2001. These rules contain water quality criteria for priority pollutants.

J. **State Implementation Policy.** On 2 March 2000, the State Water Board adopted the *Policy for Implementation of Toxics Standards for Inland Surface Waters, Enclosed Bays, and Estuaries of California* (State Implementation Policy or SIP). The SIP became effective on 28 April 2000 with respect to the priority pollutant criteria promulgated for California by USEPA through the NTR and to the priority pollutant objectives established by the Central Valley Water Board in the Basin Plan. The SIP became effective on 18 May 2000 with respect to the priority pollutant criteria promulgated by USEPA through the CTR. The State Water Board adopted amendments to the SIP on 24 February 2005 that became effective on 13 July 2005. The SIP establishes implementation provisions for priority pollutant criteria and objectives and provisions for chronic toxicity control. Requirements of this Order implement the SIP.

K. **Compliance Schedules and Interim Requirements – Not Applicable**

L. **Alaska Rule.** On 30 March 2000, USEPA revised its regulation that specifies when new and revised state and tribal water quality standards become effective for CWA purposes. (40 CFR 131.21 and 65 FR 24641 (27 April 2000).) Under the revised regulation (also known as the Alaska rule), new and revised standards submitted to USEPA after 30 May 2000, must be approved by USEPA before being used for CWA purposes. The final rule also provides that standards already in effect and submitted to USEPA by 30 May 2000 may be used for CWA purposes, whether or not approved by USEPA.

M. **Stringency of Requirements for Individual Pollutants.** This Order contains both technology-based effluent limitations and WQBELs for individual pollutants. The

technology-based effluent limitations consist of restrictions on flow and percent removal requirements for 5-day biochemical oxygen demand (BOD_5) and total suspended solids (TSS). WQBELs consist of restrictions on ammonia, bis (2-ethylhexyl) phthalate, BOD_5, carbon tetrachloride, chlorine residual, copper, diazinon and chlorpyrifos, dichlorobromomethane, electrical conductivity, manganese, mercury, methylene blue active substances, nitrate, nitrite plus nitrate, pH, total coliform organisms, and TSS. This Order's technology-based pollutant restrictions implement the minimum, applicable federal technology-based requirements. In addition, this Order includes effluent limitations for BOD_5, total coliform organisms, and TSS to meet numeric objectives or protect beneficial uses.

WQBELs have been scientifically derived to implement water quality objectives that protect beneficial uses. Both the beneficial uses and the water quality objectives have been approved pursuant to federal law and are the applicable federal water quality standards. To the extent that toxic pollutant WQBELs were derived from the CTR, the CTR is the applicable standard pursuant to 40 CFR 131.38. The scientific procedures for calculating the individual WQBELs for priority pollutants are based on the CTR-SIP, which was approved by USEPA on 18 May 2000. All beneficial uses and water quality objectives contained in the Basin Plan were approved under state law and submitted to and approved by USEPA prior to 30 May 2000. Any water quality objectives and beneficial uses submitted to USEPA prior to 30 May 2000, but not approved by USEPA before that date, are nonetheless "*applicable water quality standards for purposes of the [Clean Water] Act*" pursuant to 40 CFR 131.21(c)(1). Collectively, this Order's restrictions on individual pollutants are no more stringent than required to implement the technology-based requirements of the CWA and the applicable water quality standards for purposes of the CWA.

N. Antidegradation Policy. 40 CFR 131.12 requires that the state water quality standards include an antidegradation policy consistent with the federal policy. The State Water Board established California's antidegradation policy in State Water Board Resolution No. 68-16. Resolution No. 68-16 incorporates the federal antidegradation policy where the federal policy applies under federal law. Resolution No. 68-16 requires that existing

quality of waters be maintained unless degradation is justified based on specific findings. The Central Valley Water Board's Basin Plan implements, and incorporates by reference, both the state and federal antidegradation policies. As discussed in detail in the Fact Sheet, the permitted discharge is consistent with the antidegradation provision of 40 CFR 131.12 and Resolution No. 68-16.

O. Anti-Backsliding Requirements. Sections 303(d)(4) and 402(o)(2) of the CWA and federal regulations at 40 CFR 122.44(l) prohibit backsliding in NPDES permits. These anti-backsliding provisions require effluent limitations in a reissued permit to be as stringent as those in the previous permit, with some exceptions. Some effluent limitations in this Order are less stringent that those in Order No. R5-2006-0096. As discussed in detail in the Fact Sheet, this relaxation of effluent limitations is consistent with the anti-backsliding requirements of the CWA and federal regulations.

P. Endangered Species Act. This Order does not authorize any act that results in the taking of a threatened or endangered species or any act that is now prohibited, or becomes prohibited in the future, under either the California Endangered Species Act (Fish and Game Code sections 2050 to 2097) or the Federal Endangered Species Act (16 U.S.C.A. sections 1531 to 1544). This Order requires compliance with effluent limits, receiving water limits, and other requirements to protect the beneficial uses of waters of the state. The discharger is responsible for meeting all requirements of the applicable Endangered Species Act.

Q. Monitoring and Reporting. 40 CFR 122.48 requires that all NPDES permits specify requirements for recording and reporting monitoring results. CWC sections 13267 and 13383 authorize the Central Valley Water Board to require technical and monitoring reports. The Monitoring and Reporting Program establishes monitoring and reporting requirements to implement federal and State requirements. The Monitoring and Reporting Program is provided in Attachment E.

The technical and monitoring reports in this Order are required in accordance with Water Code section 13267, which states the following in subsection (b)(1), "*In conducting an investigation specified in subdivision (a), the regional board may require*

that any person who has discharged, discharges, or is suspected of having discharged or discharging, or who proposes to discharge waste within its region, or any citizen or domiciliary, or political agency or entity of this state who has discharged, discharges, or is suspected of having discharged or discharging, or who proposes to discharge, waste outside of its region that could affect the quality of waters within its region shall furnish, under penalty of perjury, technical or monitoring program reports which the regional board requires. The burden, including costs, of these reports shall bear a reasonable relationship to the need for the report and the benefits to be obtained from the reports. In requiring those reports, the regional board shall provide the person with a written explanation with regard to the need for the reports, and shall identify the evidence that supports requiring that person to provide the reports."

The monitoring reports required by this Order are necessary to determine compliance with this Order. The need for the monitoring reports is discussed in the Fact Sheet.

R. **Standard and Special Provisions.** Standard Provisions, which apply to all NPDES permits in accordance with 40 CFR 122.41, and additional conditions applicable to specified categories of permits in accordance with 40 CFR 122.42, are provided in Attachment D. The discharger must comply with all standard provisions and with those additional conditions that are applicable under 40 CFR 122.42. The Central Valley Water Board has also included in this Order special provisions applicable to the Discharger. Some special provisions require submittal of technical reports. All technical reports are required in accordance with Water Code section 13267. The rationale for the special provisions and need for technical reports required in this Order is provided in the Fact Sheet.

S. **Provisions and Requirements Implementing State Law.** The provisions/requirements in sections IV.B, V.B, and IV.A.2.o, of this Order are included to implement State law only. These provisions/requirements are not required or authorized under the federal CWA; consequently, violations of these provisions/requirements are not subject to the enforcement remedies that are available for NPDES violations.

T. Notification of Interested Parties. The Central Valley Water Board has notified the Discharger and interested agencies and persons of its intent to prescribe WDRs for the discharge and has provided them with an opportunity to submit their written comments and recommendations. Details of notification are provided in the Fact Sheet of this Order.

U. Consideration of Public Comment. The Central Valley Water Board, in a public meeting, heard and considered all comments pertaining to the discharge. Details of the Public Hearing are provided in the Fact Sheet.

THEREFORE, IT IS HEREBY ORDERED, that Order No. R5-2006-0096 is rescinded upon the effective date of this Order except for enforcement purposes, and, in order to meet the provisions contained in division 7 of the Water Code (commencing with section 13000) and regulations adopted thereunder, and the provisions of the federal CWA and regulations and guidelines adopted thereunder, the Discharger shall comply with the requirements in this Order.

III. DISCHARGE PROHIBITIONS

A. Discharge of wastewater at a location or in a manner different from that described in the Findings is prohibited.

B. The by-pass or overflow of wastes to surface waters is prohibited, except as allowed by Federal Standard Provisions I.G. and I.H. (Attachment D).

C. Neither the discharge nor its treatment shall create a nuisance as defined in section 13050 of the Water Code.

D. The Discharger shall not allow pollutant-free wastewater to be discharged into the treatment or disposal system in amounts that significantly diminish the system's capability to comply with this Order. Pollutant-free wastewater means rainfall and groundwater that are essentially free of pollutants.

IV. EFFLUENT LIMITATIONS AND DISCHARGE SPECIFICATIONS

A. Effluent Limitations – Discharge Point Nos. 001 and 002

1. Final Effluent Limitations – Discharges to the Ponds, Discharge Point No. 002 (1.8 MGD)

a. **Effective immediately and until 31 December 2012,** the Discharger shall maintain compliance with the following effluent limitations at Discharge Point No. 002, with compliance measured at Monitoring Location EFF-001 as described in the Monitoring and Reporting Program:

Table 6. Effluent Limitations – Discharge Point No. 002 (1.8 MGD)

Parameter	Units	Effluent Limitations				
		Average Monthly	Average Weekly	Maximum Daily	Instantaneous Minimum	Instantaneous Maximum
Conventional Pollutants						
Biochemical Oxygen Demand (5-day @ 20°C)	mg/L	10	15	20	--	--
	lbs/day[1]	150	225	300	--	--
pH	standard units	--	--	--	6.0	8.0
Total Suspended Solids	mg/L	10	15	20	--	--
	lbs/day[1]	150	225	300	--	--
Priority Pollutants						
Bis (2-ethylhexyl) Phthalate	µg/L	18	--	24	--	--
Carbon Tetrachloride	µg/L	7.5	--	11	--	--
Copper, Total Recoverable	µg/L	8.7	--	12	--	--
Dichlorobromomethane	µg/L	22	--	32	--	--
Non-Conventional Pollutants						
Ammonia Nitrogen, Total (as N)	mg/L	2.4	--	3.5	--	--
	lbs/day[1]	36	--	53	--	--
Electrical Conductivity @ 25°C	µmhos/cm	843	--	--	--	--
Nitrite (as N)	mg/L	1.0	--	--	--	--

Parameter	Units	Effluent Limitations				
		Average Monthly	Average Weekly	Maximum Daily	Instantaneous Minimum	Instantaneous Maximum
Nitrate Plus Nitrite (as N)	mg/L	10	--	--	--	--

[1] Mass-based effluent limitations are based on a permitted average dry weather flow of 1.8 MGD.

b. **Percent Removal.** The average monthly percent removal of BOD_5 and TSS shall not be less than 85 percent.

c. **Acute Whole Effluent Toxicity.** Survival of aquatic organisms in 96-hour bioassays of undiluted waste shall be no less than:

   i. 70%, minimum for any one bioassay; and
   ii. 90%, median for any three consecutive bioassays.

d. **Total Coliform Organisms.** Effluent total coliform organisms shall not exceed:

   i. 2.2 most probable number (MPN) per 100 mL, as a 7-day median;
   ii. 23 MPN/100 mL, more than once in any 30-day period; and
   iii. 240 MPN/100 mL, at any time.

e. **Average Dry Weather Flow.** The average dry weather discharge flow shall not exceed 1.8 MGD.

f. **Mercury, Total Recoverable.** The total monthly mass discharge of total mercury shall not exceed 0.016 lbs.

g. **Diazinon and Chlorpyrifos.** Effluent diazinon and chlorpyrifos concentrations shall not exceed the sum of one (1.0) as defined below:

   i. **Average Monthly Effluent Limitation**

$$S_{AMEL} = \frac{C_{D-avg}}{0.079} + \frac{C_{C-avg}}{0.012} \leq 1.0$$

$C_{D\text{-}avg}$ = average monthly diazinon effluent concentration in µg/L

$C_{C\text{-}avg}$ = average monthly chlorpyrifos effluent concentration in µg/L

ii. Maximum Daily Effluent Limitation

$$S_{MDEL} = \frac{C_{D-max}}{0.16} + \frac{C_{C-max}}{0.025} \leq 1.0$$

$C_{D\text{-}max}$ = maximum daily diazinon effluent concentration in µg/L

$C_{C\text{-}max}$ = maximum daily chlorpyrifos effluent concentration in µg/L

h. **Manganese, Total Recoverable.** For a calendar year, the annual average effluent concentration shall not exceed 75 µg/L.

i. **Methylene Blue Active Substances.** For a calendar year, the annual average effluent concentration shall not exceed 30,000 µg/L.

2. Final Effluent Limitations – Discharges to the Ponds or to Feather River, Discharge Point No. 001 and 002 (5.0 MGD)

a. **Effective 31 December 2012**, the Discharger shall maintain compliance with the following effluent limitations at Discharge Point Nos. 001 or 002, with compliance measured at Monitoring Location EFF-001, as described in the Monitoring and Reporting Program:

Table 7. Effluent Limitations – Discharge Point No. 001 and 002 (5.0 MGD)

Parameter	Units	Effluent Limitations				
		Average Monthly	Average Weekly	Maximum Daily	Instantaneous Minimum	Instantaneous Maximum
Conventional Pollutants						
Biochemical Oxygen Demand (5-day @ 20°C)	mg/L	10	15	20	--	--
	lbs/day[1]	420	630	830	--	--
pH	standard units	--	--	--	6.5 [2]	8.0
Total Suspended Solids	mg/L	10	15	20	--	--
	lbs/day[1]	420	630	830	--	--

Parameter	Units	Effluent Limitations				
		Average Monthly	Average Weekly	Maximum Daily	Instantaneous Minimum	Instantaneous Maximum
Priority Pollutants						
Bis (2-ethylhexyl) Phthalate	µg/L	18	--	24	--	--
Carbon Tetrachloride	µg/L	7.5	--	11	--	--
Copper, Total Recoverable	µg/L	8.7	--	12	--	--
Dichlorobromomethane	µg/L	22	--	32	--	--
Non-Conventional Pollutants						
Ammonia Nitrogen, Total (as N)	mg/L	2.4	--	3.5	--	--
	lbs/day[1]	100	--	146	--	--
Electrical Conductivity @ 25°C	µmhos/cm	1,000	--	--	--	--
Nitrite (as N)	mg/L	1.0	--	--	--	--
Nitrate Plus Nitrite (as N)	mg/L	10	--	--	--	--

[1] Mass-based effluent limitations are based on a permitted average dry weather flow of 5.0 MGD.

[2] Instantaneous minimum pH is limited to 6.0 standard units for Discharge Point No. 002 only, because of the soil beneath the ponds ability to buffer pH and other environmental factors like temperature change.

b. **Percent Removal.** The average monthly percent removal of BOD_5 and TSS shall not be less than 85 percent.

c. **Acute Whole Effluent Toxicity.** Survival of aquatic organisms in 96-hour bioassays of undiluted waste shall be no less than:

   i. 70%, minimum for any one bioassay; and
   ii. 90%, median for any three consecutive bioassays.

d. **Total Residual Chlorine - Discharge Point No. 001 Only.** Effluent total residual chlorine shall not exceed:

   i. 0.011 mg/L, as a 4-day average; and
   ii. 0.019 mg/L, as a 1-hour average.

e. **Total Coliform Organisms.** Effluent total coliform organisms shall not exceed:

i. 2.2 most probable number (MPN) per 100 mL, as a 7-day median;
ii. 23 MPN/100 mL, more than once in any 30-day period; and
iii. 240 MPN/100 mL, at any time.

f. **Average Dry Weather Flow.** The average dry weather flow to the percolation ponds at Discharge Point No. 002 shall not exceed 1.8 MGD. The average dry weather discharge flow to the Feather River at Discharge Point No. 001 shall not exceed 5.0 MGD. The total combined average dry weather flow from the Facility at Discharge Point Nos. 001 and 002 shall not exceed 5.0 MGD.

g. **Mercury, Total Recoverable.** The total monthly mass discharge of total mercury shall not exceed 0.016 lbs.

h. **Diazinon and Chlorpyrifos.** Effluent diazinon and chlorpyrifos concentrations shall not exceed the sum of one (1.0) as defined below:

i. **Average Monthly Effluent Limitation**

$$S_{AMEL} = \frac{C_{D-avg}}{0.079} + \frac{C_{C-avg}}{0.012} \leq 1.0$$

$C_{D\text{-}avg}$ = average monthly diazinon effluent concentration in µg/L

$C_{C\text{-}avg}$ = average monthly chlorpyrifos effluent concentration in µg/L

ii. **Maximum Daily Effluent Limitation**

$$S_{MDEL} = \frac{C_{D-max}}{0.16} + \frac{C_{C-max}}{0.025} \leq 1.0$$

$C_{D\text{-}max}$ = maximum daily diazinon effluent concentration in µg/L

$C_{C\text{-}max}$ = maximum daily chlorpyrifos effluent concentration in µg/L

i. **Manganese, Total Recoverable.** For a calendar year, the annual average effluent concentration shall not exceed 75 µg/L.

j. **Methylene Blue Active Substances.** For a calendar year, the annual average effluent concentration shall not exceed 30,000 µg/L.

3. **Final Effluent Limitations – Discharges to the Ponds or to the Feather River, Discharge Points No. 001 and 002 (6.7 MGD)**

a. **Effective upon compliance with Special Provision VI.C.6.a.i,** the Discharger shall maintain compliance with the following effluent limitations at Discharge Point Nos. 001 and 002, with compliance measured at Monitoring Location EFF-001, as described in the Monitoring and Reporting Program:

Table 8. Effluent Limitations – Discharge Point No. 001 and 002 (6.7 MGD)

Parameter	Units	Effluent Limitations				
		Average Monthly	Average Weekly	Maximum Daily	Instantaneous Minimum	Instantaneous Maximum
Conventional Pollutants						
Biochemical Oxygen Demand (5-day @ 20°C)	mg/L	10	15	20	--	--
	lbs/day[1]	559	838	1,118	--	--
pH	standard units	--	--	--	6.5 [2]	8.0
Total Suspended Solids	mg/L	10	15	20	--	--
	lbs/day[1]	559	838	1,118	--	--
Priority Pollutants						
Bis (2-ethylhexyl) Phthalate	µg/L	18	--	24	--	--
Carbon Tetrachloride	µg/L	7.5	--	11	--	--
Copper, Total Recoverable	µg/L	8.7	--	12	--	--
Dichlorobromomethane	µg/L	22	--	32	--	--
Non-Conventional Pollutants						
Ammonia Nitrogen, Total (as N)	mg/L	2.4	--	3.5	--	--
	lbs/day[1]	134	--	196	--	--
Electrical Conductivity @ 25°C	µmhos/cm	1,000	--	--	--	--
Nitrite (as N)	mg/L	1.0	--	--	--	--

Parameter	Units	Effluent Limitations				
		Average Monthly	Average Weekly	Maximum Daily	Instantaneous Minimum	Instantaneous Maximum
Nitrate Plus Nitrite (as N)	mg/L	10	--	--	--	--

[1] Mass-based effluent limitations are based on a permitted average dry weather flow of 6.7 MGD.

[2] Instantaneous minimum pH is limited to 6.0 standard units for Discharge Point No. 002 only, because of the soil beneath the ponds ability to buffer pH and other environmental factors like temperature change.

b. **Percent Removal.** The average monthly percent removal of BOD_5 and TSS shall not be less than 85 percent.

c. **Acute Whole Effluent Toxicity.** Survival of aquatic organisms in 96-hour bioassays of undiluted waste shall be no less than:

   i. 70%, minimum for any one bioassay; and
   ii. 90%, median for any three consecutive bioassays.

d. **Total Residual Chlorine - Discharge Point No. 001 Only.** Effluent total residual chlorine shall not exceed:

   i. 0.011 mg/L, as a 4-day average; and
   ii. 0.019 mg/L, as a 1-hour average.

e. **Total Coliform Organisms.** Effluent total coliform organisms shall not exceed:

   i. 2.2 most probable number (MPN) per 100 mL, as a 7-day median;
   ii. 23 MPN/100 mL, more than once in any 30-day period; and
   iii. 240 MPN/100 mL, at any time.

f. **Average Dry Weather Flow.** The average dry weather flow to the percolation ponds at Discharge Point No. 002 shall not exceed 1.8 MGD. The average dry weather discharge flow to the Feather River at Discharge Point No. 001 shall not exceed 6.7 MGD. The total combined average dry weather flow from the Facility at Discharge Point Nos. 001 and 002 shall not exceed 6.7 MGD.

g. **Mercury, Total Recoverable.** The total monthly mass discharge of total mercury shall not exceed 0.028 lbs.

h. **Diazinon and Chlorpyrifos.** Effluent diazinon and chlorpyrifos concentrations shall not exceed the sum of one (1.0) as defined below:

i. **Average Monthly Effluent Limitation**

$$S_{AMEL} = \frac{C_{D-avg}}{0.079} + \frac{C_{C-avg}}{0.012} \leq 1.0$$

$C_{D\text{-}avg}$ = average monthly diazinon effluent concentration in µg/L

$C_{C\text{-}avg}$ = average monthly chlorpyrifos effluent concentration in µg/L

ii. **Maximum Daily Effluent Limitation**

$$S_{MDEL} = \frac{C_{D-max}}{0.16} + \frac{C_{C-max}}{0.025} \leq 1.0$$

$C_{D\text{-}max}$ = maximum daily diazinon effluent concentration in µg/L

$C_{C\text{-}max}$ = maximum daily chlorpyrifos effluent concentration in µg/L

i. **Manganese, Total Recoverable.** For a calendar year, the annual average effluent concentration shall not exceed 75 µg/L.

j. **Methylene Blue Active Substances.** For a calendar year, the annual average effluent concentration shall not exceed 30,000 µg/L.

4. **Interim Effluent Limitations – Not Applicable**

B. Land Discharge Specifications – Discharge Point No. 002

1. Objectionable odors originating at the Facility shall not be perceivable beyond the limits of the wastewater treatment and disposal areas.

2. As a means of discerning compliance with Land Discharge Specification No. 1, the dissolved oxygen content in the upper zone (1 foot) of wastewater in the ponds shall not be less than 1.0 mg/L.

3. Ponds shall be managed to prevent breeding of mosquitos. In particular,

   a. An erosion control program should assure that small coves and irregularities are not created around the perimeter of the water surface.

   b. Weeds shall be minimized.

   c. Dead algae, vegetation, and debris shall not accumulate on the water surface.

4. Public contact with wastewater shall be precluded through such means as fences, signs, and other acceptable alternatives.

5. Ponds shall have a minimum of 2 feet of freeboard (measured vertically to the lowest, non-spillway point of overflow) and sufficient capacity to accommodate allowable wastewater flow and design seasonal precipitation and ancillary inflow and infiltration except for ponds located within the Feather River levees when inundated with river water.

C. Reclamation Specifications – Not Applicable

V. RECEIVING WATER LIMITATIONS

A. Surface Water Limitations

Receiving water limitations are based on water quality objectives contained in the Basin Plan and are a required part of this Order. The discharge shall not cause the following in the Feather River:

1. **Bacteria.** The fecal coliform concentration, based on a minimum of not less than five samples for any 30-day period, to exceed a geometric mean of 200 MPN/100 mL, nor more than 10 percent of the total number of fecal coliform samples taken during any 30-day period to exceed 400 MPN/100 mL.

2. **Biostimulatory Substances.** Water to contain biostimulatory substances which promote aquatic growths in concentrations that cause nuisance or adversely affect beneficial uses.

3. **Chemical Constituents.** Chemical constituents to be present in concentrations that adversely affect beneficial uses.

4. **Color.** Discoloration that causes nuisance or adversely affects beneficial uses.

5. **Dissolved Oxygen:**

   a. The monthly median of the mean daily dissolved oxygen concentration to fall below 85 percent of saturation in the main water mass;

   b. The 95 percentile dissolved oxygen concentration to fall below 75 percent of saturation; nor

   c. The dissolved oxygen concentration to be reduced below 7.0 mg/L at any time.

6. **Floating Material.** Floating material to be present in amounts that cause nuisance or adversely affect beneficial uses.

7. **Oil and Grease.** Oils, greases, waxes, or other materials to be present in concentrations that cause nuisance, result in a visible film or coating on the surface of the water or on objects in the water, or otherwise adversely affect beneficial uses.

8. **pH.** The pH to be depressed below 6.5 nor raised above 8.5.

9. **Pesticides:**

a. Pesticides to be present, individually or in combination, in concentrations that adversely affect beneficial uses;

b. Pesticides to be present in bottom sediments or aquatic life in concentrations that adversely affect beneficial uses;

c. Total identifiable persistent chlorinated hydrocarbon pesticides to be present in the water column at concentrations detectable within the accuracy of analytical methods approved by USEPA or the Executive Officer;

d. Pesticide concentrations to exceed those allowable by applicable antidegradation policies (see State Water Board Resolution No. 68-16 and 40 CFR 131.12.);

e. Pesticide concentrations to exceed the lowest levels technically and economically achievable;

f. Pesticides to be present in concentration in excess of the maximum contaminant levels set forth in CCR, Title 22, division 4, chapter 15; nor

g. Thiobencarb to be present in excess of 1.0 µg/L.

10. Radioactivity:

a. Radionuclides to be present in concentrations that are harmful to human, plant, animal, or aquatic life nor that result in the accumulation of radionuclides in the food web to an extent that presents a hazard to human, plant, animal, or aquatic life.

b. Radionuclides to be present in excess of the maximum contaminant levels specified in Table 64442 of Section 64442 and Table 64443 of Section 64443 of Title 22 of the California Code of Regulations.

12. Suspended Sediments. The suspended sediment load and suspended sediment discharge rate of surface waters to be altered in such a manner as to cause nuisance or adversely affect beneficial uses.

13. **Settleable Substances.** Substances to be present in concentrations that result in the deposition of material that causes nuisance or adversely affects beneficial uses.

14. **Suspended Material.** Suspended material to be present in concentrations that cause nuisance or adversely affect beneficial uses.

15. **Taste and Odors.** Taste- or odor-producing substances to be present in concentrations that impart undesirable tastes or odors to fish flesh or other edible products of aquatic origin, or that cause nuisance, or otherwise adversely affect beneficial uses.

16. **Temperature.** The natural temperature to be increased by more than 5°F. Compliance to be determined based on the difference in temperature at RSW-001 and RSW-002.

17. **Toxicity.** Toxic substances to be present, individually or in combination, in concentrations that produce detrimental physiological responses in human, plant, animal, or aquatic life.

18. **Turbidity.**

    a. Shall not exceed 2 Nephelometric Turbidity Units (NTU) where natural turbidity is less than 1 NTU;

    b. Shall not increase more than 1 NTU where natural turbidity is between 1 and 5 NTUs;

    c. Shall not increase more than 20 percent where natural turbidity is between 5 and 50 NTUs;

    d. Shall not increase more than 10 NTU where natural turbidity is between 50 and 100 NTUs; nor

    e. Shall not increase more than 10 percent where natural turbidity is greater than 100 NTUs.

B. Groundwater Limitations

1. Discharges to the percolation ponds shall not cause groundwater to contain constituents in concentrations greater than applicable water quality objectives or natural background quality, whichever is greater.

VI. PROVISIONS

A. Standard Provisions

1. The Discharger shall comply with all Standard Provisions (federal NPDES standard conditions from 40 CFR Part 122) included in Attachment D of this Order.

2. The Discharger shall comply with the following provisions:

   a. If the Discharger's wastewater treatment plant is publicly owned or subject to regulation by California Public Utilities Commission, it shall be supervised and operated by persons possessing certificates of appropriate grade according to Title 23, CCR, division 3, chapter 26.

   b. After notice and opportunity for a hearing, this Order may be terminated or modified for cause, including, but not limited to:

      i. violation of any term or condition contained in this Order;

      ii. obtaining this Order by misrepresentation or by failing to disclose fully all relevant facts;

      iii. a change in any condition that requires either a temporary or permanent reduction or elimination of the authorized discharge; and

      iv. a material change in the character, location, or volume of discharge.

      The causes for modification include:

- *New regulations.* New regulations have been promulgated under section 405(d) of the CWA, or the standards or regulations on which the permit was based have been changed by promulgation of amended standards or regulations or by judicial decision after the permit was issued.

- *Land application plans.* When required by a permit condition to incorporate a land application plan for beneficial reuse of sewage sludge, to revise an existing land application plan, or to add a land application plan.

- *Change in sludge use or disposal practice.* Under 40 CFR 122.62(a)(1), a change in the Discharger's sludge use or disposal practice is a cause for modification of the permit. It is cause for revocation and reissuance if the Discharger requests or agrees.

The Central Valley Water Board may review and revise this Order at any time upon application of any affected person or the Central Valley Water Board's own motion.

c. If a toxic effluent standard or prohibition (including any scheduled compliance specified in such effluent standard or prohibition) is established under section 307(a) of the CWA, or amendments thereto, for a toxic pollutant that is present in the discharge authorized herein, and such standard or prohibition is more stringent than any limitation upon such pollutant in this Order, the Central Valley Water Board will revise or modify this Order in accordance with such toxic effluent standard or prohibition.

The Discharger shall comply with effluent standards and prohibitions within the time provided in the regulations that establish those standards or prohibitions, even if this Order has not yet been modified.

d. This Order shall be modified, or alternately revoked and reissued, to comply with any applicable effluent standard or limitation issued or approved under

sections 301(b)(2)(C) and (D), 304(b)(2), and 307(a)(2) of the CWA, if the effluent standard or limitation so issued or approved:

i. Contains different conditions or is otherwise more stringent than any effluent limitation in the Order; or

ii. Controls any pollutant limited in the Order.

The Order, as modified or reissued under this paragraph, shall also contain any other requirements of the CWA then applicable.

e. The provisions of this Order are severable. If any provision of this Order is found invalid, the remainder of this Order shall not be affected.

f. The Discharger shall take all reasonable steps to minimize any adverse effects to waters of the State or users of those waters resulting from any discharge or sludge use or disposal in violation of this Order. Reasonable steps shall include such accelerated or additional monitoring as necessary to determine the nature and impact of the non-complying discharge or sludge use or disposal.

g. The Discharger shall ensure compliance with any existing or future pretreatment standard promulgated by USEPA under section 307 of the CWA, or amendment thereto, for any discharge to the municipal system.

h. A copy of this Order shall be maintained at the discharge facility and be available at all times to operating personnel. Key operating personnel shall be familiar with its content.

i. Safeguard to electric power failure:

i. The Discharger shall provide safeguards to assure that, should there be reduction, loss, or failure of electric power, the discharge shall comply with the terms and conditions of this Order.

ii. Upon written request by the Central Valley Water Board, the Discharger shall submit a written description of safeguards. Such safeguards may include alternate power sources, standby generators, retention capacity, operating procedures, or other means. A description of the safeguards provided shall include an analysis of the frequency, duration, and impact of power failures experienced over the past 5 years on effluent quality and on the capability of the Discharger to comply with the terms and conditions of the Order. The adequacy of the safeguards is subject to the approval of the Central Valley Water Board.

iii. Should the treatment works not include safeguards against reduction, loss, or failure of electric power, or should the Central Valley Water Board not approve the existing safeguards, the Discharger shall, within 90 days of having been advised in writing by the Central Valley Water Board that the existing safeguards are inadequate, provide to the Central Valley Water Board and USEPA a schedule of compliance for providing safeguards such that in the event of reduction, loss, or failure of electric power, the Discharger shall comply with the terms and conditions of this Order. The schedule of compliance shall, upon approval of the Central Valley Water Board, become a condition of this Order.

j. The Discharger, upon written request of the Central Valley Water Board, shall file with the Board a technical report on its preventive (failsafe) and contingency (cleanup) plans for controlling accidental discharges, and for minimizing the effect of such events. This report may be combined with that required under Central Valley Water Board Standard Provision contained in section VI.A.2.i. of this Order.

The technical report shall:

i. Identify the possible sources of spills, leaks, untreated waste by-pass, and contaminated drainage. Loading and storage areas, power outage, waste

treatment unit outage, and failure of process equipment, tanks and pipes should be considered.

ii. Evaluate the effectiveness of present facilities and procedures and state when they became operational.

iii. Predict the effectiveness of the proposed facilities and procedures and provide an implementation schedule containing interim and final dates when they will be constructed, implemented, or operational.

The Central Valley Water Board, after review of the technical report, may establish conditions which it deems necessary to control accidental discharges and to minimize the effects of such events. Such conditions shall be incorporated as part of this Order, upon notice to the Discharger.

k. A publicly owned treatment works whose waste flow has been increasing, or is projected to increase, shall estimate when flows will reach hydraulic and treatment capacities of its treatment and disposal facilities. The projections shall be made in January, based on the last 3 years' average dry weather flows, peak wet weather flows and total annual flows, as appropriate. When any projection shows that capacity of any part of the facilities may be exceeded in 4 years, the Discharger shall notify the Central Valley Water Board by 31 January. A copy of the notification shall be sent to appropriate local elected officials, local permitting agencies and the press. Within 120 days of the notification, the Discharger shall submit a technical report showing how it will prevent flow volumes from exceeding capacity or how it will increase capacity to handle the larger flows. The Central Valley Water Board may extend the time for submitting the report.

l. The Discharger shall submit technical reports as directed by the Executive Officer. All technical reports required herein that involve planning, investigation, evaluation, or design, or other work requiring interpretation and proper application of engineering or geologic sciences, shall be prepared by or under the direction

of persons registered to practice in California pursuant to California Business and Professions Code, sections 6735, 7835, and 7835.1. To demonstrate compliance with Title 16, CCR, sections 415 and 3065, all technical reports must contain a statement of the qualifications of the responsible registered professional(s). As required by these laws, completed technical reports must bear the signature(s) and seal(s) of the registered professional(s) in a manner such that all work can be clearly attributed to the professional responsible for the work.

m. The Central Valley Water Board is authorized to enforce the terms of this permit under several provisions of the Water Code, including, but not limited to, sections 13385, 13386, and 13387.

n. For publicly owned treatment works, prior to making any change in the point of discharge, place of use, or purpose of use of treated wastewater that results in a permanent decrease of flow in any portion of a watercourse, the Discharger must file a petition with the State Water Board, Division of Water Rights, and receive approval for such a change. (Water Code section 1211).

o. In the event the Discharger does not comply or will be unable to comply for any reason, with any prohibition, maximum daily effluent limitation, 1-hour average effluent limitation, or receiving water limitation contained in this Order, the Discharger shall notify the Central Valley Water Board by telephone (916) 464-3291 within 24 hours of having knowledge of such noncompliance, and shall confirm this notification in writing within 5 days, unless the Central Valley Water Board waives confirmation. The written notification shall include the information required by the Standard Provision contained in Attachment D section V.E.1. [40 CFR 122.41(l)(6)(i)].

p. Failure to comply with provisions or requirements of this Order, or violation of other applicable laws or regulations governing discharges from this facility, may subject the Discharger to administrative or civil liabilities, criminal penalties, and/or other enforcement remedies to ensure compliance. Additionally, certain

violations may subject the Discharger to civil or criminal enforcement from appropriate local, state, or federal law enforcement entities.

q. In the event of any change in control or ownership of land or waste discharge facilities presently owned or controlled by the Discharger, the Discharger shall notify the succeeding owner or operator of the existence of this Order by letter, a copy of which shall be immediately forwarded to the Central Valley Water Board.

To assume operation under this Order, the succeeding owner or operator must apply in writing to the Executive Officer requesting transfer of the Order. The request must contain the requesting entity's full legal name, the state of incorporation if a corporation, address and telephone number of the persons responsible for contact with the Central Valley Water Board and a statement. The statement shall comply with the signatory and certification requirements in the federal Standard Provisions (Attachment D, section V.B) and state that the new owner or operator assumes full responsibility for compliance with this Order. Failure to submit the request shall be considered a discharge without requirements, a violation of the Water Code. Transfer shall be approved or disapproved in writing by the Executive Officer.

B. Monitoring and Reporting Program Requirements

The Discharger shall comply with the Monitoring and Reporting Program, and future revisions thereto, in Attachment E of this Order.

C. Special Provisions

1. Reopener Provisions

a. Conditions that necessitate a major modification of a permit are described in 40 CFR 122.62, including, but not limited to:

i. If new or amended applicable water quality standards are promulgated or approved pursuant to section 303 of the CWA, or amendments thereto, this permit may be reopened and modified in accordance with the new or amended standards.

ii. When new information, that was not available at the time of permit issuance, would have justified different permit conditions at the time of issuance.

b. This Order may be reopened for modification, or revocation and reissuance, as a result of the detection of a reportable priority pollutant generated by special conditions included in this Order. These special conditions may be, but are not limited to, fish tissue sampling, whole effluent toxicity, monitoring requirements on internal waste stream(s), and monitoring for surrogate parameters. Additional requirements may be included in this Order as a result of the special condition monitoring data.

c. **Mercury.** If mercury is found to be causing toxicity based on acute or chronic toxicity test results, or if a TMDL program is adopted, this Order shall be reopened and the mass effluent limitation modified (higher or lower) or an effluent concentration limitation imposed. If the Central Valley Water Board determines that a mercury offset program is feasible for Dischargers subject to a NPDES permit, then this Order may be reopened to reevaluate the mercury mass loading limitation(s) and the need for a mercury offset program for the Discharger.

d. **Whole Effluent Toxicity.** As a result of a Toxicity Reduction Evaluation (TRE), this Order may be reopened to include a chronic toxicity limitation, a new acute toxicity limitation, and/or a limitation for a specific toxicant identified in the TRE. Additionally, if the State Water Board revises the SIP's toxicity control provisions that would require the establishment of numeric chronic toxicity effluent limitations, this Order may be reopened to include a numeric chronic toxicity effluent limitation based on the new provisions.

e. **Chronic Whole Effluent Toxicity.** If the results of quarterly chronic toxicity testing conducted on discharges to the Feather River at Discharge Point No. 001 indicate that the discharge exhibits reasonable potential to cause or contribute to the Basin Plan's narrative toxicity objective, this Order may be reopened to establish an effluent limitation for chronic toxicity.

f. **Water Effects Ratios (WER) and Metal Translators.** A default WER of 1.0 has been used in this Order for calculating criteria for applicable priority and non-priority pollutant inorganic constituents. In addition, default dissolved-to-total metal translators have been used to convert water quality objectives from dissolved to total recoverable when developing effluent limitations for copper. If the Discharger performs studies to determine site-specific WERs and/or site-specific dissolved-to-total metal translators, this Order may be reopened to modify the effluent limitations for the applicable inorganic constituents.

g. **Bis (2-ethylhexyl) Phthalate.** If the results of the study required by Special Provision VI.C.2.c and monitoring using "clean techniques" to ensure that sample containers, sampling apparatus, and analytical equipment are not sources of detections of bis (2-ethylhexyl) phthalate in the effluent indicate that bis (2-ethylhexyl) phthalate does not exhibit reasonable potential to cause or contribute to an exceedance of applicable water quality objectives, this Order may be reopened to remove the effluent limitations for bis (2-ethylhexyl) phthalate.

h. **Polycyclic Aromatic Hydrocarbons (PAHs).** If the results of the study required by Special Provision VI.C.2.d and monitoring indicate that any PAHs exhibit reasonable potential to cause or contribute to an exceedance of applicable water quality objectives, this Order may be reopened to establish effluent limitations for the applicable constituents.

i. **Mixing Zone/Dilution Credits**. If the results of the Mixing Zone Verification Study required by Special Provision VI.C.2.b of this Order indicate that the mixing zone/dilution credits needed by the Discharger are less than allowed by this Order, or if monitoring data from the upgraded and expanded Facility or

regionalized Facility indicate that the Facility can comply with more stringent performance-based effluent limitations for constituents and a smaller human health mixing zone, this Order may be reopened to revise applicable effluent limitations and the size of the mixing zone accordingly. Additionally, this Order may be reopened if the Discharger submits data substantiating an acute and/or chronic mixing zone is achievable following the requirements set forth in the SIP.

2. Special Studies, Technical Reports and Additional Monitoring Requirements

a. Chronic Whole Effluent Toxicity. For compliance with the Basin Plan's narrative toxicity objective, this Order requires the Discharger to conduct chronic whole effluent toxicity (WET) testing, as specified in the Monitoring and Reporting Program (Attachment E, section V). Furthermore, this Provision requires the Discharger to investigate the causes of, and identify corrective actions to reduce or eliminate effluent toxicity. If the discharge exhibits toxicity, as described in subsection ii below, the Discharger is required to initiate a TRE in accordance with an approved TRE Workplan, and take actions to mitigate the impact of the discharge and prevent recurrence of toxicity. A TRE is a site-specific study conducted in a stepwise process to identify the source(s) of toxicity and the effective control measures for effluent toxicity. TREs are designed to identify the causative agents and sources of effluent toxicity, evaluate the effectiveness of the toxicity control options, and confirm the reduction in effluent toxicity. This Provision includes requirements for the Discharger to develop and submit a TRE Workplan and includes procedures for accelerated chronic toxicity monitoring and TRE initiation.

i. Initial Investigative TRE Workplan. Within 90 days of the effective date of this Order, the Discharger shall submit to the Central Valley Water Board an Initial Investigative TRE Workplan for approval by the Executive Officer. This should be a one to two page document including, at a minimum:

(a) A description of the investigation and evaluation techniques that will be used to identify potential causes and sources of effluent toxicity, effluent variability, and treatment system efficiency;

(b) A description of the facility's methods of maximizing in-house treatment efficiency and good housekeeping practices, and a list of all chemicals used in operation of the facility; and

(c) A discussion of who will conduct the Toxicity Identification Evaluation (TIE), if necessary (e.g., an in-house expert or outside contractor).

ii. Accelerated Monitoring and TRE Initiation. When the numeric toxicity monitoring trigger is exceeded during regular chronic toxicity monitoring, the Discharger shall initiate accelerated monitoring as required in the Accelerated Monitoring Specifications. The Discharger shall initiate a TRE to address effluent toxicity if any WET testing results exceed the numeric toxicity monitoring trigger during accelerated monitoring.

iii. Numeric Toxicity Monitoring Trigger. The numeric toxicity monitoring trigger to initiate a TRE is > **1 TU_C** (where TU_C = 100/NOEC). The monitoring trigger is not an effluent limitation; it is the toxicity threshold at which the Discharger is required to begin accelerated monitoring and initiate a TRE when the effluent exhibits toxicity.

iv. Accelerated Monitoring Specifications. If the numeric toxicity monitoring trigger is exceeded during regular chronic toxicity testing, the Discharger shall initiate accelerated monitoring within 14 days of notification by the laboratory of the exceedance. Accelerated monitoring shall consist of four (4) chronic toxicity tests conducted once every 2 weeks using the species that exhibited toxicity. The following protocol shall be used for accelerated monitoring and TRE initiation:

(a) If the results of four (4) consecutive accelerated monitoring tests do not exceed the monitoring trigger, the Discharger may cease accelerated

monitoring and resume regular chronic toxicity monitoring. However, notwithstanding the accelerated monitoring results, if there is evidence of effluent toxicity, the Executive Officer may require that the Discharger initiate a TRE.

(b) If the source(s) of the toxicity is easily identified (e.g., temporary plant upset), the Discharger shall make necessary corrections to the facility and shall continue accelerated monitoring until four (4) consecutive accelerated tests do not exceed the monitoring trigger. Upon confirmation that the effluent toxicity has been removed, the Discharger may cease accelerated monitoring and resume regular chronic toxicity monitoring.

(c) If the result of any accelerated toxicity test exceeds the monitoring trigger, the Discharger shall cease accelerated monitoring and begin a TRE to investigate the cause(s) of, and identify corrective actions to reduce or eliminate effluent toxicity. Within thirty (30) days of notification by the laboratory of any test result exceeding the monitoring trigger during accelerated monitoring, the Discharger shall submit a TRE Action Plan to the Central Valley Water Board including, at minimum:

(1) Specific actions the Discharger will take to investigate and identify the cause(s) of toxicity, including a TRE WET monitoring schedule;

(2) Specific actions the Discharger will take to mitigate the impact of the discharge and prevent the recurrence of toxicity; and

(3) A schedule for these actions.

Within sixty (60) days of notification by the laboratory of the test results, the Discharger shall submit to the Central Valley Water Board a TRE Workplan for approval by the Executive Officer. The TRE Workplan shall outline the procedures for identifying the source(s) of, and reducing or

eliminating effluent toxicity. The TRE Workplan must be developed in accordance with USEPA guidance[1].

b. **Mixing Zone Verification Study.** The Discharger shall conduct a mixing zone verification study following commencement of discharges to the Feather River through Discharge Point No. 001 to validate that the mixing zone and dilution credits allowed in this Order are in accordance with Section 1.4.2.2 of the SIP. A work plan and schedule for conducting the study shall be submitted to the Central Valley Water Board within **6 months** of adoption of this Order. The mixing zone verification study shall be completed and submitted to the Central Valley Water Board **within 18 months of initiating discharge to Discharge Point No. 001**.

c. **Bis (2-ethylhexyl) Phthalate Study.** The Discharger shall comply with the following time schedule in conducting a study to determine the presence of bis (2-ethylhexyl) phthalate in the effluent:

Task	Compliance Date
i. Conduct monitoring for bis (2-ethylhexyl) phthalate using "clean techniques" to ensure that sample containers, sampling apparatus, and analytical equipment are not sources of detections of bis (2-ethylhexyl) phthalate as required in Attachment E	Monthly as required by Table E-3 of Attachment E for 2 years following commencement of discharges at Discharge Point No. 001
ii. Submit Study Report Evaluating Results	6 months following completion of final monitoring event during third year of permit term

[1] See the Fact Sheet (Attachment F, section VII.B.2.a.) for a list of USEPA guidance documents that must be considered in development of the TRE Workplan.

d. **Polycyclic Aromatic Hydrocarbons (PAHs) Study.** The Discharger shall comply with the following time schedule in conducting a study to determine the presence of PAHs in the effluent:

Task	Compliance Date
i. Conduct monitoring for PAHs as required in Attachment E	Quarterly as required by Table E-3 of Attachment E for 2 years following commencement of discharges at Discharge Point No. 001
ii. Submit Study Report Evaluating Results	6 months following completion of final monitoring event during third year of permit term

3. Best Management Practices and Pollution Prevention

a. **Salinity Evaluation and Minimization Plan.** The Discharger shall update and implement their 28 October 2009 Salinity Evaluation and Minimization Plan to identify and address sources of salinity from the Facility. The plan shall be updated and submitted to the Central Valley Water Board **within 9 months of the adoption date of this Order**.

4. Construction, Operation and Maintenance Specifications

a. **Turbidity.** Effluent turbidity shall not exceed:

i. 2 NTU, as a daily average;
ii. 5 NTU, more than 5% of the time within a 24-hour period; and
iii. 10 NTU, at any time.

b. Wastewater shall be oxidized, filtered, and adequately disinfected pursuant to DPH reclamation criteria, CCR, Title 22, division 4, chapter 3, (Title 22), or equivalent.

c. With the exception of the ponds located within the Feather River levees, the treatment, storage, and disposal facilities shall be designed, constructed,

operated, and maintained to prevent inundation or washout due to floods with a 100-year return frequency.

5. Special Provisions for Municipal Facilities (POTWs Only)

a. Pretreatment Requirements

i. The Discharger shall implement, as more completely set forth in 40 CFR 403.5, the necessary legal authorities, programs, and controls to ensure that the following incompatible wastes are not introduced to the treatment system, where incompatible wastes are:

(a) Wastes which create a fire or explosion hazard in the treatment works;

(b) Wastes which will cause corrosive structural damage to treatment works, but in no case wastes with a pH lower than 5.0, unless the works is specially designed to accommodate such wastes;

(c) Solid or viscous wastes in amounts which cause obstruction to flow in sewers, or which cause other interference with proper operation or treatment works;

(d) Any waste, including oxygen demanding pollutants (BOD, etc.), released in such volume or strength as to cause inhibition or disruption in the treatment works, and subsequent treatment process upset and loss of treatment efficiency;

(e) Heat in amounts that inhibit or disrupt biological activity in the treatment works, or that raise influent temperatures above 40°C (104°F), unless the Central Valley Water Board approves alternate temperature limits;

(f) Petroleum oil, non-biodegradable cutting oil, or products of mineral oil origin in amounts that will cause interference or pass through;

(g) Pollutants which result in the presence of toxic gases, vapors, or fumes within the treatment works in a quantity that may cause acute worker health and safety problems; and

(h) Any trucked or hauled pollutants, except at points predesignated by the Discharger.

ii. The Discharger shall implement, as more completely set forth in 40 CFR 403.5, the legal authorities, programs, and controls necessary to ensure that indirect discharges do not introduce pollutants into the sewerage system that, either alone or in conjunction with a discharge or discharges from other sources:

(a) Flow through the system to the receiving water in quantities or concentrations that cause a violation of this Order, or

(b) Inhibit or disrupt treatment processes, treatment system operations, or sludge processes, use, or disposal and either cause a violation of this Order or prevent sludge use or disposal in accordance with this Order.

b. Sludge/Biosolids Treatment or Discharge Specifications. Sludge in this document means the solid, semisolid, and liquid residues removed during primary, secondary, or advanced wastewater treatment processes. Solid waste refers to grit and screening material generated during preliminary treatment. Residual sludge means sludge that will not be subject to further treatment at the wastewater treatment plant. Biosolids refer to sludge that has been treated and tested and shown to be capable of being beneficially and legally used pursuant to federal and state regulations as a soil amendment for agricultural, silvicultural, horticultural, and land reclamation activities as specified under 40 CFR Part 503.

i. Collected screenings, residual sludge, biosolids, and other solids removed from liquid wastes shall be disposed of in a manner approved by the Executive Officer, and consistent with Consolidated Regulations for Treatment, Storage, Processing, or Disposal of Solid Waste, as set forth in Title 27,

CCR, division 2, subdivision 1, section 20005, et seq. Removal for further treatment, storage, disposal, or reuse at sites (e.g., landfill, composting sites, soil amendment sites) that are operated in accordance with valid waste discharge requirements issued by a Regional Water Board will satisfy these specifications.

ii. Sludge and solid waste shall be removed from screens, sumps, ponds, clarifiers, etc. as needed to ensure optimal plant performance.

iii. The treatment of sludge generated at the Facility shall be confined to the Facility property and conducted in a manner that precludes infiltration of waste constituents into soils in a mass or concentration that will violate groundwater limitations in section V.B. of this Order. In addition, the storage of residual sludge, solid waste, and biosolids on Facility property shall be temporary and controlled, and contained in a manner that minimizes leachate formation and precludes infiltration of waste constituents into soils in a mass or concentration that will violate groundwater limitations included in section V.B. of this Order.

iv. The use, disposal, storage, and transportation of biosolids shall comply with existing federal and state laws and regulations, including permitting requirements and technical standards included in 40 CFR Part 503. If the State Water Board and the Central Valley Water Board are given the authority to implement regulations contained in 40 CFR Part 503, this Order may be reopened to incorporate appropriate time schedules and technical standards. The Discharger must comply with the standards and time schedules contained in 40 CFR Part 503 whether or not they have been incorporated into this Order.

v. The Discharger shall comply with Section IX.A. Biosolids of the Monitoring and Reporting Program, Attachment E.

vi. Any proposed change in biosolids use or disposal practice from a previously approved practice shall be reported to the Executive Officer and USEPA Regional Administrator at least 90 days in advance of the change.

vii. **Within 180 days of the permit effective date,** the Discharger shall review and update its existing biosolids use or disposal plan, and submit it to the Central Valley Water Board. The updated plan shall describe at a minimum:

(a) Sources and amounts of biosolids generated annually.

(b) Location(s) of on site storage and description of the containment area.

(c) Plans for ultimate disposal. For landfill disposal, include the Central Valley Water Board's waste discharge requirement numbers that regulate the particular landfill; the present classification of the landfill; and the name and location of the landfill.

c. Biosolids Storage and Transportation Specifications

Biosolids shall be considered to be "stored" if they are placed on the ground or in non-mobile containers (i.e. not in a truck or trailer) at an intermediate storage location away from the generator/processing for more than 48 hours. Biosolids shall be considered to be "staged" if placed on the ground for brief periods of time solely to facilitate transfer of the biosolids between transportation and application vehicles.

i. Biosolids shall not be stored directly on the ground at any one location for more than seven (7) consecutive days.

ii. Facilities for the storage of Class B biosolids shall be located, designed and maintained to restrict public access to biosolids.

iii. Biosolids storage facilities shall be designed and maintained to prevent washout or inundation from a storm or flood with a return frequency of 100 years.

iv. Biosolids storage facilities, which contain biosolids, shall be designed and maintained to contain all storm water falling on the biosolids storage area during a rainfall year with a return frequency of 100 years.

v. Biosolids placed on site for more than 24 hours shall be covered.

vi. Biosolids storage facilities shall be designed, maintained and operated to minimize the generation of leachate and the effects of erosion.

vii. If biosolids are to be stored at the site, a plan describing the storage program and means of complying with the specifications contained in sections VI.C.5.b and c of this Order shall be submitted for the Central Valley Water Board's staff approval. The storage plan shall also include an adverse weather plan.

viii. The Discharger shall operate the biosolids storage facilities in accordance with the approved biosolids storage plan.

ix. The Discharger shall immediately remove and relocate any biosolids stored on site in violation of this General Order.

x. All biosolids shall be transported in covered vehicles capable of containing the designated load.

xi. All biosolids having a water content that is capable of leaching liquids shall be transported in leak proof vehicles.

xii. Each biosolids transport driver shall be trained as to the nature of its load and the proper response to accidents or spill events and shall carry a copy of an approved spill response plan.

xiii. The Discharger shall avoid the use of haul routes near residential land uses to the extent possible. If the use of haul routes near residential land uses cannot be avoided, the Discharger shall limit project-related truck traffic to daylight hours.

d. **Collection System.** On 2 May 2006, the State Water Board adopted State Water Resources Control Board Order No. 2006-0003-DWQ, Statewide General Waste Discharge Requirements (WDRs) for Sanitary Sewer Systems. The Discharger shall be subject to the requirements of Order No. 2006-0003-DWQ and any future revisions thereto. Order No. 2006-0003-DWQ requires that all public agencies that currently own or operate sanitary sewer systems apply for coverage under the general WDRs. The Discharger has applied for and has been approved for coverage under Order 2006-0003-DWQ for operation of its wastewater collection system.

e. **Continuous Monitoring Systems.** This Order, and the Monitoring and Reporting Program which is a part of this Order, requires that certain parameters be monitored on a continuous basis. The wastewater treatment plant is not staffed on a full time basis. Permit violations or system upsets can go undetected during this period. The Discharger shall establish an electronic system for operator notification for continuous recording device alarms. For existing continuous monitoring systems, the electronic notification system shall be installed within 6 months of adoption of this permit. For systems installed following permit adoption, the notification system shall be installed simultaneously.

6. Other Special Provisions

a. Facility Expansion

i. **Expansion to 6.7 MGD.** The Discharger has requested an expansion of allowable flows to be discharged to the Feather River to accommodate flows associated with the regionalization project with the City of Marysville. The permitted average dry weather flow may increase to 6.7 MGD upon compliance with the following conditions:

(a) **Effluent and Receiving Water Limitation Compliance.** The discharge shall demonstrate compliance with the effluent limitations and receiving water

limitations contained in sections IV.A.3 and V.A, respectively, of this Order.

(b) **Facility Expansions.** The Discharger shall have completed construction of the upgrade and expansion project, as described in the Discharger's Report of Waste Discharge.

(c) **Request for Increase.** The Discharger shall submit to the Central Valley Water Board a request for an increase in the permitted discharge flow rate, which demonstrates compliance with items (a) and (b) of this provision. The increase in the permitted discharge flow rate shall not be effective until the Executive Officer verifies compliance with Special Provisions VI.C.6.a and VI.C.6.b and approves the Discharger's request.

7. Compliance Schedules - Not Applicable

VII. COMPLIANCE DETERMINATION

A. BOD_5 and TSS Effluent Limitations (Sections IV.A.1.a, IV.A.1.b, IV.A.2.a, IV.A.2.b, IV.A.3.a, and IV.A.3.b). Compliance with the final effluent limitations for BOD_5 and TSS required in Limitations and Discharge Requirements sections IV.A.1.a, IV.A.2.a, and IV.A.3.a shall be ascertained by 24-hour composite samples. Compliance with effluent limitations required in Limitations and Discharge Requirements sections IV.A.1.b, IV.A.2.b, and IV.A.3.b for percent removal shall be calculated using the arithmetic mean of BOD_5 and TSS in effluent samples collected over a monthly period as a percentage of the arithmetic mean of the values for influent samples collected at approximately the same times during the same period.

B. Total Mercury Mass Loading Effluent Limitations (Sections IV.A.1.g, IV.A.2.g, and IV.A.3.g). The procedures for calculating mass loadings are as follows:

1. The total pollutant mass load for each individual calendar month shall be determined using an average of all concentration data collected that month and the corresponding total monthly flow. All effluent monitoring data collected under the monitoring and reporting program, pretreatment program, and any special studies shall be used for these calculations.

2. In calculating compliance, the Discharger shall count all non-detect measures at one-half of the detection level. If compliance with the effluent limitation is not attained due to the non-detect contribution, the Discharger shall improve and implement available analytical capabilities and compliance shall be evaluated with consideration of the detection limits.

C. **Average Dry Weather Flow Effluent Limitations (Sections IV.A.1.f, IV.A.2.f, and IV.A.3.f).** The average dry weather discharge flow represents the daily average flow when groundwater is at or near normal and runoff is not occurring. Compliance with the average dry weather flow effluent limitations will be determined annually based on the average daily flow over three consecutive dry weather months (e.g., July, August, and September).

D. **Total Coliform Organisms Effluent Limitations (Section IV.A.1.e, IV.A.2.e, and IV.A.3.e).** For each day that an effluent sample is collected and analyzed for total coliform organisms, the 7-day median shall be determined by calculating the median concentration of total coliform bacteria in the effluent utilizing the bacteriological results of the last 7 days. For example, if a sample is collected on a Wednesday, the result from that sampling event and all results from the previous 6 days (i.e., Tuesday, Monday, Sunday, Saturday, Friday, and Thursday) are used to calculate the 7-day median. If the 7-day median of total coliform organisms exceeds a most probable number (MPN) of 23 per 100 milliliters, the Discharger will be considered out of compliance.

E. **Total Residual Chlorine Effluent Limitations (Section IV.A.1.d, IV.A.2.d, and IV.A.3.d).** Continuous monitoring analyzers for chlorine residual or for dechlorination agent residual in the effluent are appropriate methods for compliance determination. A positive residual dechlorination agent in the effluent indicates that chlorine is not present in the discharge, which demonstrates compliance with the effluent limitations. This type of monitoring can also be used to prove that some chlorine residual exceedances are false positives. Continuous monitoring data showing either a positive dechlorination agent residual or a chlorine residual at or below the prescribed limit are sufficient to show compliance with the total residual chlorine effluent limitations, as long as the instruments are maintained and calibrated in accordance with the manufacturer's recommendations.

Any excursion above the 1-hour average or 4-day average total residual chlorine effluent limitations is a violation. If the Discharger conducts continuous monitoring and

the Discharger can demonstrate, through data collected from a back-up monitoring system, that a chlorine spike recorded by the continuous monitor was not actually due to chlorine, then any excursion resulting from the recorded spike will not be considered an exceedance, but rather reported as a false positive. Records supporting validation of false positives shall be maintained in accordance with Section IV Standard Provisions (Attachment D).

F. Mass Effluent Limitations. The mass effluent limitations contained in the Final Effluent Limitations IV.A.1.a, IV.A.2.a, and IV.A.3.a are based on the permitted average dry weather flow and calculated as follows:

Mass (lbs/day) = Flow (MGD) x Concentration (mg/L) x 8.34 (conversion factor)

If the effluent flow exceeds the permitted average dry weather flow during wet-weather seasons, the effluent mass limitations contained in section IV.A.1.a, IV.A.2.a, and IV.A.3.a shall not apply. If the effluent flow is below the permitted average dry weather flow during wet-weather seasons, the effluent mass limitations do apply.

G. Priority Pollutant Effluent Limitations. Compliance with effluent limitations for priority pollutants shall be determined using sample reporting protocols defined in Attachment A and Attachment E of this Order. For purposes of reporting and administrative enforcement by the Central Valley Water Board and the State Water Board, the Discharger shall be deemed out of compliance with effluent limitations if the concentration of the priority pollutant in the monitoring sample is greater than the effluent limitation and greater than or equal to the reporting level (RL).

ATTACHMENT A - DEFINITIONS

Arithmetic Mean (μ)

Also called the average, is the sum of measured values divided by the number of samples. For ambient water concentrations, the arithmetic mean is calculated as follows:

Arithmetic mean = $\mu = \Sigma x / n$ where: Σx is the sum of the measured ambient water concentrations, and n is the number of samples.

Average Dry Weather Flow (ADWF)

The average dry weather discharge flow represents the daily average flow when groundwater is at or near normal and runoff is not occurring. Section VII.C of the Limitations and Discharge Requirements specifies that compliance with the average dry weather flow effluent limitations will be determined annually based on the average daily flow over three consecutive dry weather months (e.g., July, August, and September).

Average Monthly Effluent Limitation (AMEL)

The highest allowable average of daily discharges over a calendar month, calculated as the sum of all daily discharges measured during a calendar month divided by the number of daily discharges measured during that month.

Average Weekly Effluent Limitation (AWEL)

The highest allowable average of daily discharges over a calendar week (Sunday through Saturday), calculated as the sum of all daily discharges measured during a calendar week divided by the number of daily discharges measured during that week.

Bioaccumulative

Those substances taken up by an organism from its surrounding medium through gill membranes, epithelial tissue, or from food and subsequently concentrated and retained in the body of the organism.

Carcinogenic

Pollutants are substances that are known to cause cancer in living organisms.

Coefficient of Variation (CV)

CV is a measure of the data variability and is calculated as the estimated standard deviation divided by the arithmetic mean of the observed values.

Daily Discharge

Daily Discharge is defined as either: (1) the total mass of the constituent discharged over the calendar day (12:00 am through 11:59 pm) or any 24-hour period that reasonably represents a calendar day for purposes of sampling (as specified in the permit), for a constituent with limitations expressed in units of mass or; (2) the unweighted arithmetic mean measurement of the constituent over the day for a constituent with limitations expressed in other units of measurement (e.g., concentration).

The daily discharge may be determined by the analytical results of a composite sample taken over the course of 1 day (a calendar day or other 24-hour period defined as a day) or by the arithmetic mean of analytical results from one or more grab samples taken over the course of the day.

For composite sampling, if 1 day is defined as a 24-hour period other than a calendar day, the analytical result for the 24-hour period will be considered as the result for the calendar day in which the 24-hour period ends.

Detected, but Not Quantified (DNQ)

DNQ are those sample results less than the RL, but greater than or equal to the laboratory's MDL.

Dilution Credit

Dilution Credit is the amount of dilution granted to a discharge in the calculation of a water quality-based effluent limitation, based on the allowance of a specified mixing zone. It is calculated from the dilution ratio or determined through conducting a mixing zone study or modeling of the discharge and receiving water.

Effluent Concentration Allowance (ECA)

ECA is a value derived from the water quality criterion/objective, dilution credit, and ambient background concentration that is used, in conjunction with the coefficient of variation for the effluent monitoring data, to calculate a long-term average (LTA) discharge concentration. The ECA has the same meaning as waste load allocation (WLA) as used in USEPA guidance (Technical Support Document For Water Quality-based Toxics Control, March 1991, second printing, EPA/505/2-90-001).

Enclosed Bays

Enclosed Bays means indentations along the coast that enclose an area of oceanic water within distinct headlands or harbor works. Enclosed bays include all bays where the narrowest distance between the headlands or outermost harbor works is less than 75 percent of the greatest dimension of the enclosed portion of the bay. Enclosed bays include, but are not limited to, Humboldt Bay, Bodega Harbor, Tomales Bay, Drake's Estero, San Francisco Bay, Morro Bay, Los Angeles-Long Beach Harbor, Upper and Lower Newport Bay, Mission Bay, and San Diego Bay. Enclosed bays do not include inland surface waters or ocean waters.

Estimated Chemical Concentration

The estimated chemical concentration that results from the confirmed detection of the substance by the analytical method below the ML value.

Estuaries

Estuaries means waters, including coastal lagoons, located at the mouths of streams that serve as areas of mixing for fresh and ocean waters. Coastal lagoons and mouths of streams that are temporarily separated from the ocean by sandbars shall be considered estuaries. Estuarine waters shall be considered to extend from a bay or the open ocean to a point upstream where there is no significant mixing of fresh water and seawater. Estuarine waters included, but are not limited to, the Sacramento-San Joaquin Delta, as defined in Water Code section 12220, Suisun Bay, Carquinez Strait downstream to the Carquinez Bridge, and appropriate areas of the Smith, Mad, Eel, Noyo, Russian, Klamath, San Diego, and Otay rivers. Estuaries do not include inland surface waters or ocean waters.

Inland Surface Waters

All surface waters of the State that do not include the ocean, enclosed bays, or estuaries.

Instantaneous Maximum Effluent Limitation

The highest allowable value for any single grab sample or aliquot (i.e., each grab sample or aliquot is independently compared to the instantaneous maximum limitation).

Instantaneous Minimum Effluent Limitation

The lowest allowable value for any single grab sample or aliquot (i.e., each grab sample or aliquot is independently compared to the instantaneous minimum limitation).

Maximum Daily Effluent Limitation (MDEL)

The highest allowable daily discharge of a pollutant, over a calendar day (or 24-hour period). For pollutants with limitations expressed in units of mass, the daily discharge is calculated as the total mass of the pollutant discharged over the day. For pollutants with limitations expressed in other units of measurement, the daily discharge is calculated as the arithmetic mean measurement of the pollutant over the day.

Median

The middle measurement in a set of data. The median of a set of data is found by first arranging the measurements in order of magnitude (either increasing or decreasing order). If the number of measurements (n) is odd, then the median = $X_{(n+1)/2}$. If n is even, then the median = $(X_{n/2} + X_{(n/2)+1})/2$ (i.e., the midpoint between the $n/2$ and $n/2+1$).

Method Detection Limit (MDL)

MDL is the minimum concentration of a substance that can be measured and reported with 99 percent confidence that the analyte concentration is greater than zero, as defined in 40 CFR Part 136, Attachment B, revised as of 3 July 1999.

Minimum Level (ML)

ML is the concentration at which the entire analytical system must give a recognizable signal and acceptable calibration point. The ML is the concentration in a sample that is equivalent to the concentration of the lowest calibration standard analyzed by a specific analytical procedure, assuming that all the method specified sample weights, volumes, and processing steps have been followed.

Mixing Zone

Mixing Zone is a limited volume of receiving water that is allocated for mixing with a wastewater discharge where water quality criteria can be exceeded without causing adverse effects to the overall water body.

Not Detected (ND)

Sample results which are less than the laboratory's MDL.

Ocean Waters

The territorial marine waters of the State as defined by California law to the extent these waters are outside of enclosed bays, estuaries, and coastal lagoons. Discharges to ocean waters are regulated in accordance with the State Water Board's California Ocean Plan.

Persistent Pollutants

Persistent pollutants are substances for which degradation or decomposition in the environment is nonexistent or very slow.

Pollutant Minimization Program (PMP)

PMP means waste minimization and pollution prevention actions that include, but are not limited to, product substitution, waste stream recycling, alternative waste management methods, and education of the public and businesses. The goal of the PMP shall be to reduce all potential sources of a priority pollutant(s) through pollutant minimization (control) strategies, including pollution prevention measures as appropriate, to maintain the effluent concentration at or below the water quality-based effluent limitation. Pollution prevention measures may be particularly appropriate for persistent bioaccumulative priority pollutants where there is evidence that beneficial uses are being impacted. The Central Valley Water Board may consider cost effectiveness when establishing the requirements of a PMP. The completion and implementation of a Pollution Prevention Plan, if required pursuant to Water Code section 13263.3(d), shall be considered to fulfill the PMP requirements.

Pollution Prevention

Pollution Prevention means any action that causes a net reduction in the use or generation of a hazardous substance or other pollutant that is discharged into water and includes, but is not limited to, input change, operational improvement, production process change, and product

reformulation (as defined in Water Code section 13263.3). Pollution prevention does not include actions that merely shift a pollutant in wastewater from one environmental medium to another environmental medium, unless clear environmental benefits of such an approach are identified to the satisfaction of the State or Regional Water Board.

Reporting Level (RL)

RL is the ML (and its associated analytical method) chosen by the Discharger for reporting and compliance determination from the MLs included in this Order. The MLs included in this Order correspond to approved analytical methods for reporting a sample result that are selected by the Central Valley Water Board either from Appendix 4 of the SIP in accordance with section 2.4.2 of the SIP or established in accordance with section 2.4.3 of the SIP. The ML is based on the proper application of method-based analytical procedures for sample preparation and the absence of any matrix interferences. Other factors may be applied to the ML depending on the specific sample preparation steps employed. For example, the treatment typically applied in cases where there are matrix-effects is to dilute the sample or sample aliquot by a factor of ten. In such cases, this additional factor must be applied to the ML in the computation of the RL.

Satellite Collection System

The portion, if any, of a sanitary sewer system owned or operated by a different public agency than the agency that owns and operates the wastewater treatment facility that a sanitary sewer system is tributary to.

Source of Drinking Water

Any water designated as municipal or domestic supply (MUN) in a Regional Water Board Basin Plan.

Standard Deviation (σ)

Standard Deviation is a measure of variability that is calculated as follows:

$$\sigma = (\sum[(x - \mu)^2]/(n - 1))^{0.5}$$

where:

x is the observed value;

μ is the arithmetic mean of the observed values; and

n is the number of samples.

Toxicity Reduction Evaluation (TRE)

TRE is a study conducted in a step-wise process designed to identify the causative agents of effluent or ambient toxicity, isolate the sources of toxicity, evaluate the effectiveness of toxicity control options, and then confirm the reduction in toxicity. The first steps of the TRE consist of the collection of data relevant to the toxicity, including additional toxicity testing, and an evaluation of facility operations and maintenance practices, and best management practices. A Toxicity Identification Evaluation (TIE) may be required as part of the TRE, if appropriate. (A TIE is a set of procedures to identify the specific chemical(s) responsible for toxicity. These procedures are performed in three phases (characterization, identification, and confirmation) using aquatic organism toxicity tests.)

ATTACHMENT B - MAPS

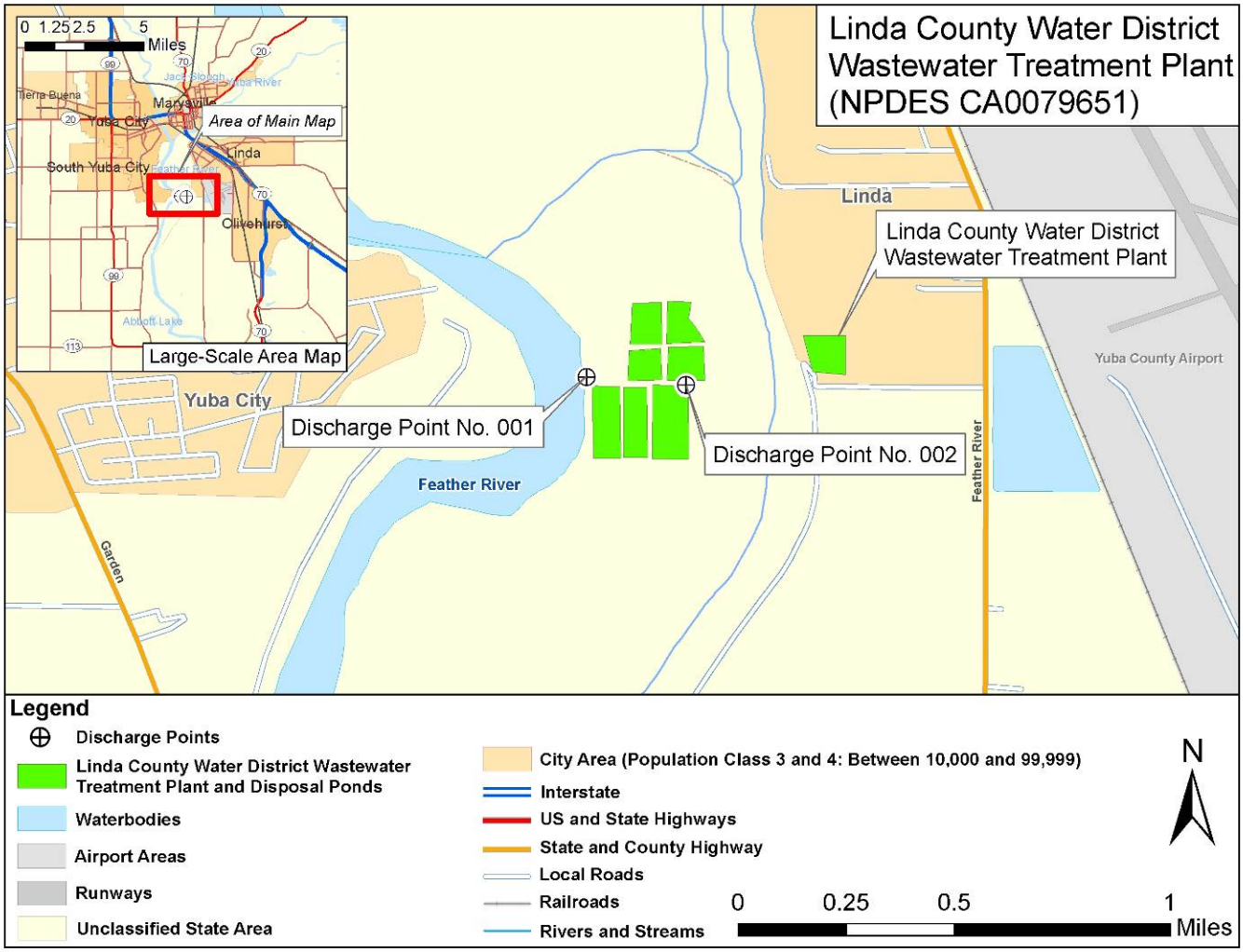

SITE LOCATION MAP

LINDA COUNTY WATER DISTRICT

LINDA COUNTY WASTEWATER TREATMENT PLANT

YUBA COUNTY AND SUTTER COUNTY

ATTACHMENT C - FLOW SCHEMATIC

Figure C-1. Flow Schematic - Existing Facility

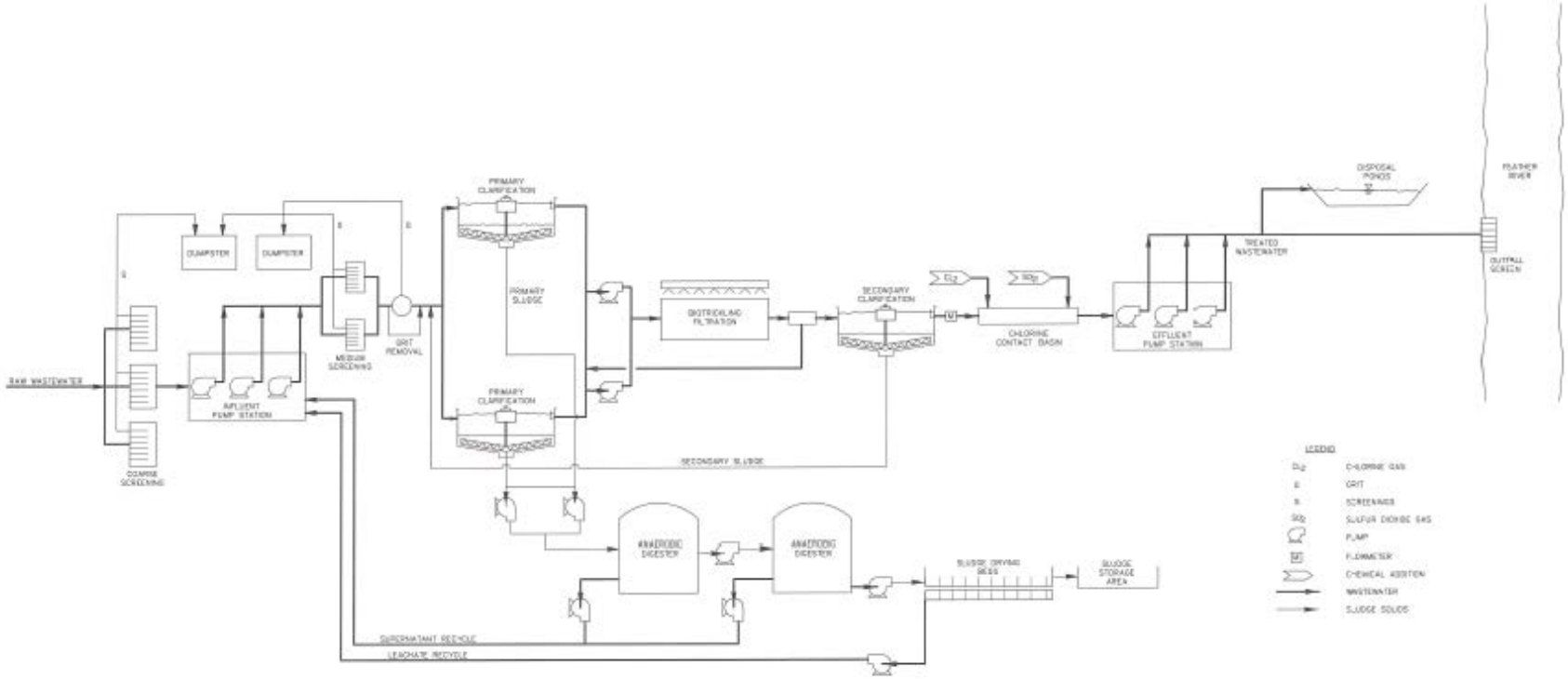

Figure C-2. Flow Schematic - Upgraded and Expanded Facility

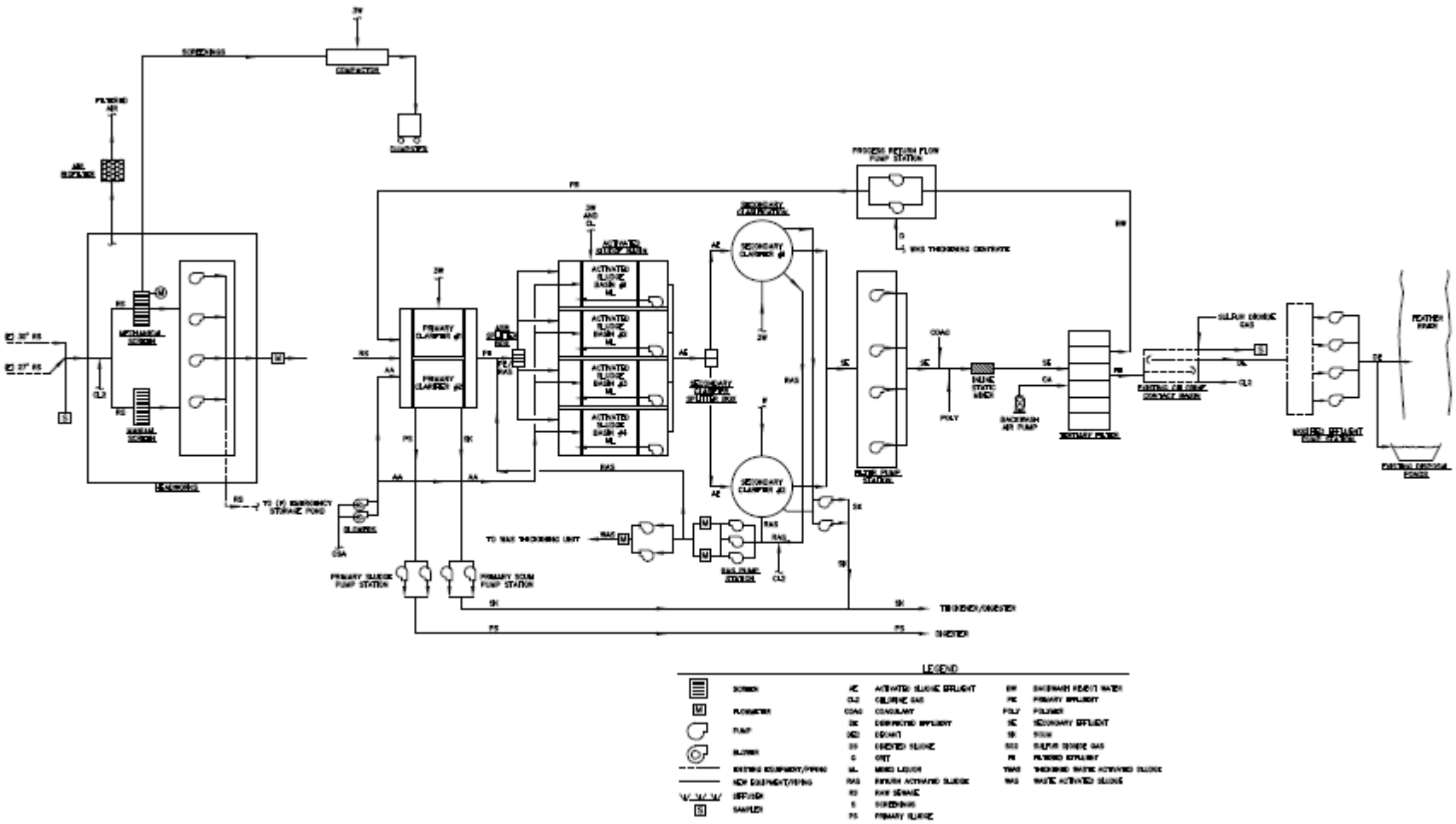

Figure C-3. Flow Schematic - Groundwater Monitoring Wells

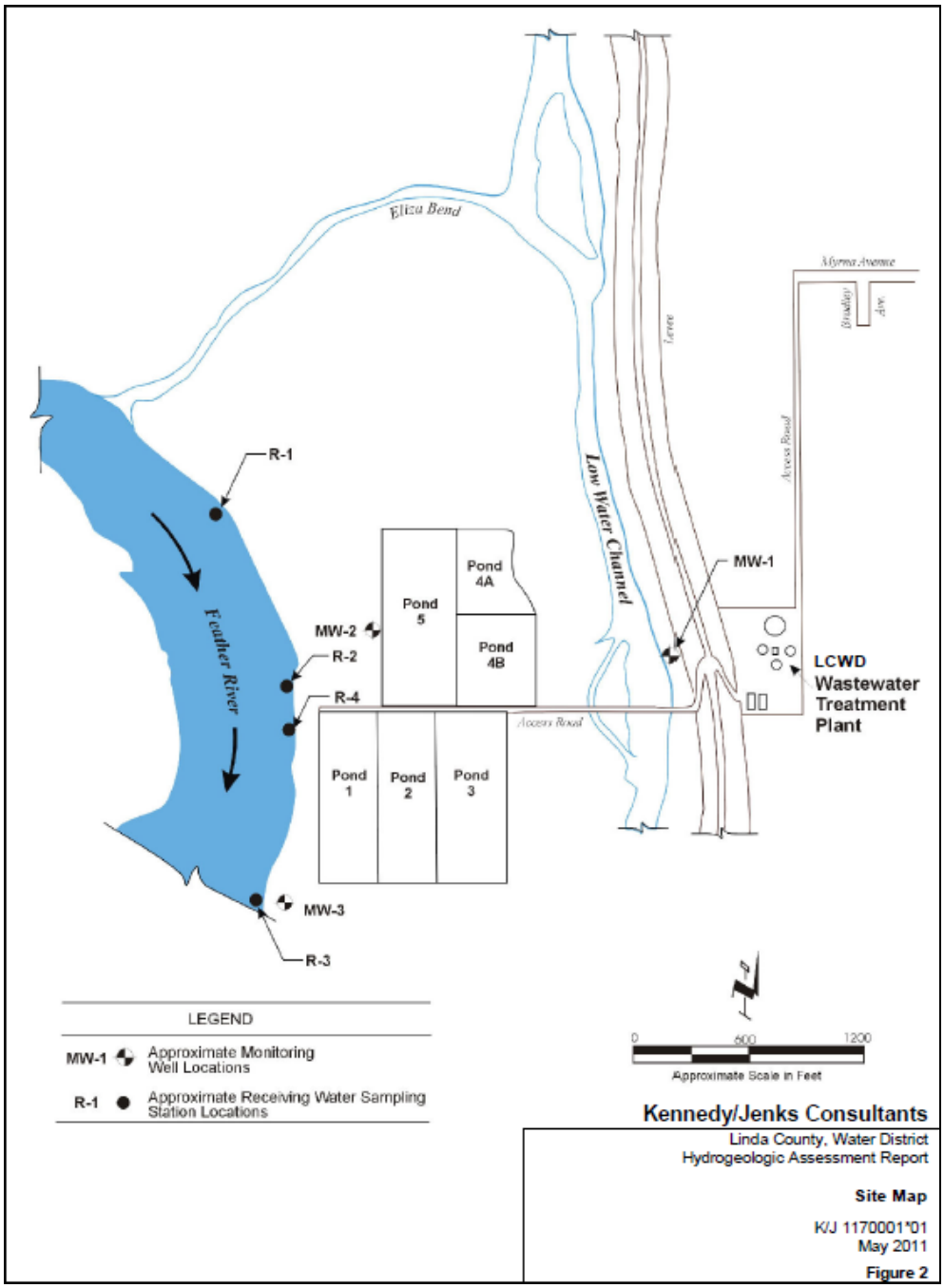

Figure C-4. Flow Schematic - Feather River Electrical Conductivity

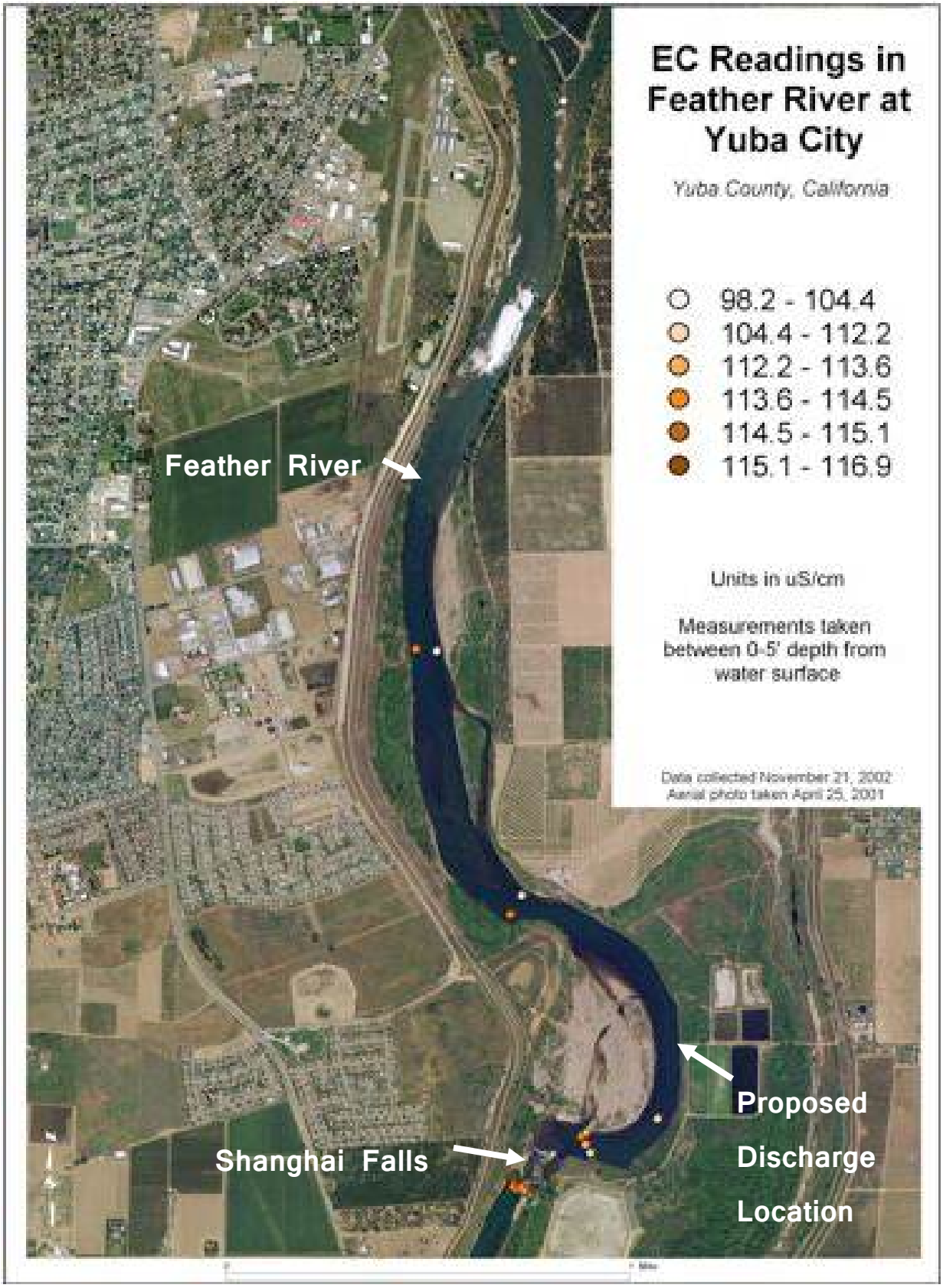
EC Readings in Feather River at Yuba City
Yuba County, California
98.2 - 104.4
104.4 - 112.2
112.2 - 113.6
113.6 - 114.5
114.5 - 115.1
115.1 - 116.9
Units in uS/cm
Measurements taken between 0-5' depth from water surface
Data collected November 21, 2002
Aerial photo taken April 25, 2001
Feather River
Shanghai Falls
Proposed Discharge Location

ATTACHMENT D - STANDARD PROVISIONS

I. STANDARD PROVISIONS - PERMIT COMPLIANCE

A. Duty to Comply

1. The Discharger must comply with all of the conditions of this Order. Any noncompliance constitutes a violation of the Clean Water Act (CWA) and the California Water Code (Water Code) and is grounds for enforcement action, for permit termination, revocation and reissuance, or modification; or denial of a permit renewal application. (40 CFR 122.41(a).)

2. The Discharger shall comply with effluent standards or prohibitions established under section 307(a) of the CWA for toxic pollutants and with standards for sewage sludge use or disposal established under section 405(d) of the CWA within the time provided in the regulations that establish these standards or prohibitions, even if this Order has not yet been modified to incorporate the requirement. (40 CFR 122.41(a)(1).)

B. Need to Halt or Reduce Activity Not a Defense

It shall not be a defense for a Discharger in an enforcement action that it would have been necessary to halt or reduce the permitted activity in order to maintain compliance with the conditions of this Order. (40 CFR 122.41(c))

C. Duty to Mitigate

The Discharger shall take all reasonable steps to minimize or prevent any discharge or sludge use or disposal in violation of this Order that has a reasonable likelihood of adversely affecting human health or the environment. (40 CFR 122.41(d))

D. Proper Operation and Maintenance

The Discharger shall at all times properly operate and maintain all facilities and systems of treatment and control (and related appurtenances) which are installed or used by the Discharger to achieve compliance with the conditions of this Order. Proper operation and maintenance also includes adequate laboratory controls and appropriate quality assurance procedures. This provision requires the operation of backup or auxiliary facilities or similar systems that are installed by a Discharger only when necessary to achieve compliance with the conditions of this Order. (40 CFR 122.41(e).)

E. Property Rights

1. This Order does not convey any property rights of any sort or any exclusive privileges. (40 CFR 122.41(g))

2. The issuance of this Order does not authorize any injury to persons or property or invasion of other private rights, or any infringement of state or local law or regulations. (40 CFR 122.5(c))

F. Inspection and Entry

The Discharger shall allow the Regional Water Board, State Water Board, United States Environmental Protection Agency (USEPA), and/or their authorized representatives (including an authorized contractor acting as their representative), upon the presentation of credentials and other documents, as may be required by law, to (40 CFR 122.41(i); Water Code section 13383):

1. Enter upon the Discharger's premises where a regulated facility or activity is located or conducted, or where records are kept under the conditions of this Order (40 CFR 122.41(i)(1));

2. Have access to and copy, at reasonable times, any records that must be kept under the conditions of this Order (40 CFR 122.41(i)(2));

3. Inspect and photograph, at reasonable times, any facilities, equipment (including monitoring and control equipment), practices, or operations regulated or required under this Order (40 CFR 122.41(i)(3)); and

4. Sample or monitor, at reasonable times, for the purposes of assuring Order compliance or as otherwise authorized by the CWA or the Water Code, any substances or parameters at any location. (40 CFR 122.41(i)(4))

G. Bypass

1. Definitions

   a. "Bypass" means the intentional diversion of waste streams from any portion of a treatment facility. (40 CFR 122.41(m)(1)(i))

   b. "Severe property damage" means substantial physical damage to property, damage to the treatment facilities, which causes them to become inoperable, or substantial and permanent loss of natural resources that can reasonably be expected to occur in the absence of a bypass. Severe property damage does not mean economic loss caused by delays in production. (40 CFR 122.41(m)(1)(ii))

2. Bypass not exceeding limitations. The Discharger may allow any bypass to occur which does not cause exceedances of effluent limitations, but only if it is for essential maintenance to assure efficient operation. These bypasses are not subject to the provisions listed in Standard Provisions - Permit Compliance I.G.3, I.G.4, and I.G.5 below. (40 CFR 122.41(m)(2))

3. Prohibition of bypass. Bypass is prohibited, and the Regional Water Board may take enforcement action against a Discharger for bypass, unless (40 CFR 122.41(m)(4)(i)):

   a. Bypass was unavoidable to prevent loss of life, personal injury, or severe property damage (40 CFR 122.41(m)(4)(i)(A));

b. There were no feasible alternatives to the bypass, such as the use of auxiliary treatment facilities, retention of untreated wastes, or maintenance during normal periods of equipment downtime. This condition is not satisfied if adequate back-up equipment should have been installed in the exercise of reasonable engineering judgment to prevent a bypass that occurred during normal periods of equipment downtime or preventive maintenance (40 CFR 122.41(m)(4)(i)(B)); and

c. The Discharger submitted notice to the Regional Water Board as required under Standard Provisions - Permit Compliance I.G.5 below. (40 CFR 122.41(m)(4)(i)(C))

4. The Regional Water Board may approve an anticipated bypass, after considering its adverse effects, if the Regional Water Board determines that it will meet the three conditions listed in Standard Provisions - Permit Compliance I.G.3 above. (40 CFR 122.41(m)(4)(ii))

5. Notice

a. Anticipated bypass. If the Discharger knows in advance of the need for a bypass, it shall submit a notice, if possible at least 10 days before the date of the bypass. (40 CFR 122.41(m)(3)(i))

b. Unanticipated bypass. The Discharger shall submit notice of an unanticipated bypass as required in Standard Provisions - Reporting V.E below (24-hour notice). (40 CFR 122.41(m)(3)(ii))

H. Upset

Upset means an exceptional incident in which there is unintentional and temporary noncompliance with technology based permit effluent limitations because of factors beyond the reasonable control of the Discharger. An upset does not include noncompliance to the extent caused by operational error, improperly designed treatment facilities, inadequate treatment facilities, lack of preventive maintenance, or careless or improper operation. (40 CFR 122.41(n)(1))

1. Effect of an upset. An upset constitutes an affirmative defense to an action brought for noncompliance with such technology based permit effluent limitations if the requirements of Standard Provisions - Permit Compliance I.H.2 below are met. No determination made during administrative review of claims that noncompliance was caused by upset, and before an action for noncompliance, is final administrative action subject to judicial review. (40 CFR 122.41(n)(2))

2. Conditions necessary for a demonstration of upset. A Discharger who wishes to establish the affirmative defense of upset shall demonstrate, through properly signed, contemporaneous operating logs or other relevant evidence that (40 CFR 122.41(n)(3)):

   a. An upset occurred and that the Discharger can identify the cause(s) of the upset (40 CFR 122.41(n)(3)(i));

   b. The permitted facility was, at the time, being properly operated (40 CFR 122.41(n)(3)(ii));

   c. The Discharger submitted notice of the upset as required in Standard Provisions - Reporting V.E.2.b below (24-hour notice) (40 CFR 122.41(n)(3)(iii)); and

   d. The Discharger complied with any remedial measures required under Standard Provisions - Permit Compliance I.C above. (40 CFR 122.41(n)(3)(iv))

3. Burden of proof. In any enforcement proceeding, the Discharger seeking to establish the occurrence of an upset has the burden of proof. (40 CFR 122.41(n)(4))

II. STANDARD PROVISIONS - PERMIT ACTION

A. General

This Order may be modified, revoked and reissued, or terminated for cause. The filing of a request by the Discharger for modification, revocation and reissuance, or termination, or a notification of planned changes or anticipated noncompliance does not stay any Order condition. (40 CFR 122.41(f))

B. Duty to Reapply

If the Discharger wishes to continue an activity regulated by this Order after the expiration date of this Order, the Discharger must apply for and obtain a new permit. (40 CFR 122.41(b))

C. Transfers

This Order is not transferable to any person except after notice to the Regional Water Board. The Regional Water Board may require modification or revocation and reissuance of the Order to change the name of the Discharger and incorporate such other requirements as may be necessary under the CWA and the Water Code. (40 CFR 122.41(l)(3) and 122.61)

III. STANDARD PROVISIONS - MONITORING

A. Samples and measurements taken for the purpose of monitoring shall be representative of the monitored activity. (40 CFR 122.41(j)(1))

B. Monitoring results must be conducted according to test procedures under 40 CFR Part 136 or, in the case of sludge use or disposal, approved under 40 CFR Part 136 unless otherwise specified in 40 CFR Part 503 unless other test procedures have been specified in this Order. (40 CFR 122.41(j)(4) and 122.44(i)(1)(iv))

IV. STANDARD PROVISIONS - RECORDS

A. Except for records of monitoring information required by this Order related to the Discharger's sewage sludge use and disposal activities, which shall be retained for a period of at least 5 years (or longer as required by 40 CFR Part 503), the Discharger shall retain records of all monitoring information, including all calibration and maintenance records and all original strip chart recordings for continuous monitoring instrumentation, copies of all reports required by this Order, and records of all data used to complete the application for this Order, for a period of at least three (3) years from the date of the sample, measurement, report or application. This period

may be extended by request of the Regional Water Board Executive Officer at any time. (40 CFR 122.41(j)(2))

B. Records of monitoring information shall include:

1. The date, exact place, and time of sampling or measurements (40 CFR 122.41(j)(3)(i));
2. The individual(s) who performed the sampling or measurements (40 CFR 122.41(j)(3)(ii));
3. The date(s) analyses were performed (40 CFR 122.41(j)(3)(iii));
4. The individual(s) who performed the analyses (40 CFR 122.41(j)(3)(iv));
5. The analytical techniques or methods used (40 CFR 122.41(j)(3)(v)); and
6. The results of such analyses. (40 CFR 122.41(j)(3)(vi))

C. Claims of confidentiality for the following information will be denied (40 CFR 122.7(b)):

1. The name and address of any permit applicant or Discharger (40 CFR 122.7(b)(1)); and
2. Permit applications and attachments, permits and effluent data. (40 CFR 122.7(b)(2))

V. STANDARD PROVISIONS - REPORTING

A. Duty to Provide Information

The Discharger shall furnish to the Regional Water Board, State Water Board, or USEPA within a reasonable time, any information which the Regional Water Board, State Water Board, or USEPA may request to determine whether cause exists for modifying, revoking and reissuing, or terminating this Order or to determine compliance with this Order. Upon request, the Discharger shall also furnish to the Regional Water

Board, State Water Board, or USEPA copies of records required to be kept by this Order. (40 CFR 122.41(h); Wat. Code, § 13267)

B. Signatory and Certification Requirements

1. All applications, reports, or information submitted to the Regional Water Board, State Water Board, and/or USEPA shall be signed and certified in accordance with Standard Provisions - Reporting V.B.2, V.B.3, V.B.4, and V.B.5 below. (40 CFR 122.41(k))

2. All permit applications shall be signed by either a principal executive officer or ranking elected official. For purposes of this provision, a principal executive officer of a federal agency includes: (i) the chief executive officer of the agency, or (ii) a senior executive officer having responsibility for the overall operations of a principal geographic unit of the agency (e.g., Regional Administrators of USEPA). (40 CFR 122.22(a)(3)).

3. All reports required by this Order and other information requested by the Regional Water Board, State Water Board, or USEPA shall be signed by a person described in Standard Provisions - Reporting V.B.2 above, or by a duly authorized representative of that person. A person is a duly authorized representative only if:

a. The authorization is made in writing by a person described in Standard Provisions - Reporting V.B.2 above (40 CFR 122.22(b)(1));

b. The authorization specifies either an individual or a position having responsibility for the overall operation of the regulated facility or activity such as the position of plant manager, operator of a well or a well field, superintendent, position of equivalent responsibility, or an individual or position having overall responsibility for environmental matters for the company. (A duly authorized representative may thus be either a named individual or any individual occupying a named position.) (40 CFR 122.22(b)(2)); and

c. The written authorization is submitted to the Regional Water Board and State Water Board. (40 CFR 122.22(b)(3))

4. If an authorization under Standard Provisions - Reporting V.B.3 above is no longer accurate because a different individual or position has responsibility for the overall operation of the facility, a new authorization satisfying the requirements of Standard Provisions - Reporting V.B.3 above must be submitted to the Regional Water Board and State Water Board prior to or together with any reports, information, or applications, to be signed by an authorized representative. (40 CFR 122.22(c))

5. Any person signing a document under Standard Provisions - Reporting V.B.2 or V.B.3 above shall make the following certification:

"*I certify under penalty of law that this document and all attachments were prepared under my direction or supervision in accordance with a system designed to assure that qualified personnel properly gather and evaluate the information submitted. Based on my inquiry of the person or persons who manage the system or those persons directly responsible for gathering the information, the information submitted is, to the best of my knowledge and belief, true, accurate, and complete. I am aware that there are significant penalties for submitting false information, including the possibility of fine and imprisonment for knowing violations.*"
(40 CFR 122.22(d))

C. Monitoring Reports

1. Monitoring results shall be reported at the intervals specified in the Monitoring and Reporting Program (Attachment E) in this Order. (40 CFR 122.22(l)(4))

2. Monitoring results must be reported on a Discharge Monitoring Report (DMR) form or forms provided or specified by the Regional Water Board or State Water Board for reporting results of monitoring of sludge use or disposal practices.
(40 CFR 122.41(l)(4)(i))

3. If the Discharger monitors any pollutant more frequently than required by this Order using test procedures approved under 40 CFR Part 136 or, in the case of sludge use or disposal, approved under 40 CFR Part 136 unless otherwise specified in 40 CFR Part 503, or as specified in this Order, the results of this monitoring shall be included in the calculation and reporting of the data submitted in the DMR or sludge reporting form specified by the Regional Water Board.
(40 CFR 122.41(l)(4)(ii))

4. Calculations for all limitations, which require averaging of measurements, shall utilize an arithmetic mean unless otherwise specified in this Order.
(40 CFR 122.41(l)(4)(iii))

D. Compliance Schedules

Reports of compliance or noncompliance with, or any progress reports on, interim and final requirements contained in any compliance schedule of this Order, shall be submitted no later than 14 days following each schedule date. (40 CFR 122.41(l)(5))

E. Twenty-Four Hour Reporting

1. The Discharger shall notify the Office of Emergency Services of any noncompliance that may endanger health or the environment within two (2) hours from the time the Discharger becomes aware of the circumstances. The Discharger shall notify the Central Valley Water Board of the noncompliance by telephone or fax within 24 hours from the time the Discharger becomes aware of the circumstances. A written submission shall also be provided to the Central Valley Water Board within five (5) days of the time the Discharger becomes aware of the circumstances. The written submission shall contain a description of the noncompliance and its cause; the period of noncompliance, including exact dates and times, and if the noncompliance has not been corrected, the anticipated time it is expected to continue; and steps taken or planned to reduce, eliminate, and prevent reoccurrence of the noncompliance. (40 CFR 122.41(l)(6)(i))

2. The following shall be included as information that must be reported within 24 hours under this paragraph (40 CFR 122.41(l)(6)(ii)):

   a. Any unanticipated bypass that exceeds any effluent limitation in this Order. (40 CFR 122.41(l)(6)(ii)(A))

   b. Any upset that exceeds any effluent limitation in this Order. (40 CFR 122.41(l)(6)(ii)(B))

3. The Regional Water Board may waive the above-required written report under this provision on a case-by-case basis if an oral report has been received within 24 hours. (40 CFR 122.41(l)(6)(iii))

F. Planned Changes

The Discharger shall give notice to the Regional Water Board as soon as possible of any planned physical alterations or additions to the permitted facility. Notice is required under this provision only when (40 CFR 122.41(l)(1)):

1. The alteration or addition to a permitted facility may meet one of the criteria for determining whether a facility is a new source in 40 CFR 122.29(b) (40 CFR 122.41(l)(1)(i)); or

2. The alteration or addition could significantly change the nature or increase the quantity of pollutants discharged. This notification applies to pollutants that are not subject to effluent limitations in this Order. (40 CFR 122.41(l)(1)(ii))

3. The alteration or addition results in a significant change in the Discharger's sludge use or disposal practices, and such alteration, addition, or change may justify the application of permit conditions that are different from or absent in the existing permit, including notification of additional use or disposal sites not reported during the permit application process or not reported pursuant to an approved land application plan. (40 CFR 122.41(l)(1)(iii))

G. Anticipated Noncompliance

The Discharger shall give advance notice to the Regional Water Board or State Water Board of any planned changes in the permitted facility or activity that may result in noncompliance with General Order requirements. (40 CFR 122.41(l)(2))

H. Other Noncompliance

The Discharger shall report all instances of noncompliance not reported under Standard Provisions - Reporting V.C, V.D, and V.E above at the time monitoring reports are submitted. The reports shall contain the information listed in Standard Provision - Reporting V.E above. (40 CFR 122.41(l)(7))

I. Other Information

When the Discharger becomes aware that it failed to submit any relevant facts in a permit application, or submitted incorrect information in a permit application or in any report to the Regional Water Board, State Water Board, or USEPA, the Discharger shall promptly submit such facts or information. (40 CFR 122.41(l)(8))

VI. STANDARD PROVISIONS - ENFORCEMENT

A. The Regional Water Board is authorized to enforce the terms of this permit under several provisions of the Water Code, including, but not limited to, sections 13385, 13386, and 13387.

VII. ADDITIONAL PROVISIONS - NOTIFICATION LEVELS

A. Publicly-Owned Treatment Works (POTWs)

All POTWs shall provide adequate notice to the Regional Water Board of the following (40 CFR 122.42(b)):

1. Any new introduction of pollutants into the POTW from an indirect discharger that would be subject to sections 301 or 306 of the CWA if it were directly discharging those pollutants (40 CFR 122.42(b)(1)); and

2. Any substantial change in the volume or character of pollutants being introduced into that POTW by a source introducing pollutants into the POTW at the time of adoption of the Order. (40 CFR 122.42(b)(2))

3. Adequate notice shall include information on the quality and quantity of effluent introduced into the POTW as well as any anticipated impact of the change on the quantity or quality of effluent to be discharged from the POTW.
(40 CFR 122.42(b)(3).

ATTACHMENT E - MONITORING AND REPORTING PROGRAM

Table of Contents

I. General Monitoring Provisions E-3
II. Monitoring Locations E-6
III. Influent Monitoring Requirements E-7
  A. Monitoring Location INF-001 ..... E-7
IV. Effluent Monitoring Requirements E-7
  A. Monitoring Location EFF-001 - Feather River or Percolation Ponds E-7
V. Whole Effluent Toxicity Testing Requirements E-11
VI. Land Discharge Monitoring Requirements E-15
  A. Monitoring Locations PND-001, PND-002, PND-003, PND-004, PND-005, PND-006, and PND-007 ..... E-15
VII. Reclamation Monitoring Requirements - Not Applicable E-16
VIII. Receiving Water Monitoring Requirements - Surface Water and Groundwater E-17
  A. Monitoring Locations RSW-001, RSW-002, and RSW-003 ..... E-17
  B. Monitoring Locations GW-001, GW-002, and GW-003 ..... E-19
IX. Other Monitoring Requirements E-21
  A. Biosolids E-21
  B. Municipal Water Supply E-21
X. Reporting Requirements E-22
  A. General Monitoring and Reporting Requirements E-22
  B. Self Monitoring Reports (SMRs) E-22
  C. Discharge Monitoring Reports (DMRs) E-28
  D. Other Reports E-29

List of Tables

Table E-1. Monitoring Station Locations E-6
Table E-2. Influent Monitoring E-7
Table E-3. Effluent Monitoring - Monitoring Location EFF-001 ..... E-8
Table E-5. Chronic Toxicity Testing Dilution Series E-13
Table E-6. Pond Monitoring Requirements E-15
Table E-7. Receiving Water Monitoring Requirements - Monitoring Locations RSW-001 and RSW-002 ..... E-17
Table E-8. Receiving Water Monitoring Requirements - Monitoring Location RSW-003 ..... E-18
Table E-9. Groundwater Monitoring Requirements E-20
Table E-10. Municipal Water Supply Monitoring Requirements E-21
Table E-11. Monitoring Periods and Reporting Schedule E-23
Table E-12. Reporting Requirements for Special Provisions Progress Reports E-29

ATTACHMENT E - MONITORING AND REPORTING PROGRAM

Title 40 of the Code of Federal Regulations (CFR), section 122.48 (40 CFR 122.48) requires that all NPDES permits specify monitoring and reporting requirements. California Water Code (Water Code) sections 13267 and 13383 also authorize the Regional Water Quality Control Board (Central Valley Water Board) to require technical and monitoring reports. This Monitoring and Reporting Program establishes monitoring and reporting requirements, which implement the federal and California regulations.

I. GENERAL MONITORING PROVISIONS

A. Samples and measurements taken as required herein shall be representative of the volume and nature of the monitored discharge. All samples shall be taken at the monitoring locations specified below and, unless otherwise specified, before the monitored flow joins or is diluted by any other waste stream, body of water, or substance. Monitoring locations shall not be changed without notification to and the approval of the Central Valley Water Board.

B. Effluent samples shall be taken downstream of the last addition of wastes to the treatment or discharge works where a representative sample may be obtained prior to mixing with the receiving waters. Samples shall be collected at such a point and in such a manner to ensure a representative sample of the discharge.

C. Chemical, bacteriological, and bioassay analyses of any material required by this Order shall be conducted by a laboratory certified for such analyses by the Department of Public Health (DPH). Laboratories that perform sample analyses must be identified in all monitoring reports submitted to the Central Valley Water Board. In the event a certified laboratory is not available to the Discharger for any onsite field measurements such as pH, dissolved oxygen (DO), turbidity, temperature and residual chlorine, such analyses performed by a noncertified laboratory will be accepted provided a Quality Assurance-Quality Control Program is instituted by the laboratory. A manual containing the steps followed in this program for any onsite field measurements such as pH, DO,

turbidity, temperature and residual chlorine must be kept onsite in the treatment facility laboratory and shall be available for inspection by Central Valley Water Board staff. The Discharger must demonstrate sufficient capability (qualified and trained employees, properly calibrated and maintained field instruments, etc.) to adequately perform these field measurements. The Quality Assurance-Quality Control Program must conform to USEPA guidelines or to procedures approved by the Central Valley Water Board.

D. Appropriate flow measurement devices and methods consistent with accepted scientific practices shall be selected and used to ensure the accuracy and reliability of measurements of the volume of monitored discharges. All monitoring instruments and devices used by the Discharger to fulfill the prescribed monitoring program shall be properly maintained and calibrated as necessary, at least yearly, to ensure their continued accuracy. All flow measurement devices shall be calibrated at least once per year to ensure continued accuracy of the devices.

E. Monitoring results, including noncompliance, shall be reported at intervals and in a manner specified in this Monitoring and Reporting Program.

F. Laboratories analyzing monitoring samples shall be certified by DPH, in accordance with the provision of Water Code section 13176, and must include quality assurance/quality control data with their reports.

G. The Discharger shall conduct analysis on any sample provided by USEPA as part of the Discharge Monitoring Quality Assurance (DMQA) program. The results of any such analysis shall be submitted to USEPA's DMQA manager.

H. The Discharger shall file with the Central Valley Water Board technical reports on self-monitoring performed according to the detailed specifications contained in this Monitoring and Reporting Program.

I. The results of all monitoring required by this Order shall be reported to the Central Valley Water Board, and shall be submitted in such a format as to allow direct comparison with the limitations and requirements of this Order. Unless otherwise

specified, discharge flows shall be reported in terms of the monthly average and the daily maximum discharge flows.

II. MONITORING LOCATIONS

The Discharger shall establish the following monitoring locations to demonstrate compliance with the effluent limitations, discharge specifications, and other requirements in this Order:

Table E-1. Monitoring Station Locations

Discharge Point Name	Monitoring Location Name	Monitoring Location Description
--	INF-001	A location where a representative sample of the influent into the Facility can be collected.
001	EFF-001	Downstream from the last connection through which wastes can be admitted to the outfall before being discharged to the Feather River or percolation ponds.
--	RSW-001	Feather River, 100 feet upstream of Pond 5.
--	RSW-002	Feather River, 100 feet downstream of Pond 1.
--	RSW-003	Approximately 3,000 feet downstream of the EFF-001 outfall.
--	PND-001	Percolation Pond 1
--	PND-002	Percolation Pond 2
--	PND-003	Percolation Pond 3
--	PND-004	Percolation Pond 4
--	PND-005	Percolation Pond 5
--	PND-006	Percolation Pond 6
--	PND-007	Percolation Pond 7
--	GW-001	Groundwater monitoring well (Identified as MW-1 in the Discharger's Hydrogeologic Assessment Report).
--	GW-002	Groundwater monitoring well (Identified as MW-2 in the Discharger's Hydrogeologic Assessment Report).
--	GW-003	Groundwater monitoring well (Identified as MW-3 in the Discharger's Hydrogeologic Assessment Report).
--	SPL-001	A location where a representative sample of the municipal water supply can be obtained.
--	BIO-001	A location where a representative sample of the biosolids can be obtained.

III. INFLUENT MONITORING REQUIREMENTS

A. Monitoring Location INF-001

1. The Discharger shall monitor influent to the Facility at Monitoring Location INF-001 as follows:

Table E-2. Influent Monitoring

Parameter	Units	Sample Type	Minimum Sampling Frequency	Required Analytical Test Method
Flow	MGD	Meter	Continuous	--
Conventional Pollutants				
Biochemical Oxygen Demand (5-day @ 20°C)	mg/L	24-hr Composite[1]	3/Week	[2]
pH	standard units	Meter	Continuous	[2]
Total Suspended Solids	mg/L	24-hr Composite[1]	3/Week	[2]

[1] 24-hour flow proportional composite.

[2] Pollutants shall be analyzed using the analytical methods described in 40 CFR Part 136; where no methods are specified for a given pollutant, method shall be approved by the Central Valley Water Board or the State Water Board.

IV. EFFLUENT MONITORING REQUIREMENTS

A. Monitoring Location EFF-001 - Feather River or Percolation Ponds

1. The Discharger shall monitor treated wastewater at Monitoring Location EFF-001 when discharging at Discharge Point No. 001 or 002 as follows. If more than one analytical test method is listed for a given parameter, the Discharger must select from the listed methods and corresponding Minimum Level.

Table E-3. Effluent Monitoring - Monitoring Location EFF-001

Parameter	Units	Sample Type	Minimum Sampling Frequency	Required Analytical Test Method
Flow	MGD	Meter	Continuous	--
Conventional Pollutants				
Biochemical Oxygen Demand (5-day @ 20°C)	mg/L	24-hr Composite[1]	3/Week	[2]
	lbs/day	Calculate	3/Week	--
pH	standard units	Meter	Continuous[3]	[2,4]
Total Suspended Solids	mg/L	24-hr Composite[1]	3/Week	[2]
	lbs/day	Calculate	3/Week	--
Priority Pollutants				
Bis (2-ethylhexyl) phthalate	µg/L	Grab	1/Month	[2,5,6]
Carbon Tetrachloride	µg/L	Grab	1/Month	[2,5]
Copper, Total Recoverable	µg/L	24-Hour Composite[1]	1/Month	[2,5]
Dichlorobromomethane	µg/L	Grab	1/Month	[2,5]
Mercury, Total Recoverable	µg/L	Grab	1/Month	[2,5,7]
	lbs/month	Calculate	1/Month	--
Polycyclic Aromatic Hydrocarbons[8]	µg/L	Grab	1/Quarter[9]	[2,5]
Priority Pollutants and Other Constituents of Concern (see section X.D.4. below and Attachment I)[10,11,12]	See Attachment I	See Attachment I[1]	See Attachment I	See Attachment I
Non-Conventional Pollutants				
Ammonia Nitrogen, Total (as N)	mg/L	Grab	3/Week[3]	[2]
	lbs/day	Calculated	3/Week[3]	--
Chlorine, Total Residual	mg/L	Meter	Continuous	[2,13]
Chlorpyrifos	µg/L	Grab	1/Quarter	[2]
Dechlorination Agent	mg/L	Meter	Continuous	[14]
Diazinon	µg/L	Grab	1/Quarter	[2]
Electrical Conductivity @ 25°C	µmhos/cm	Meter	Continuous	[2]
Hardness, Total (as $CaCO_3$)	mg/L	24-Hour Composite[1]	1/Month	[2]
Manganese, Total Recoverable	µg/L	24-Hour Composite[1]	1/Month	[2]

Parameter	Units	Sample Type	Minimum Sampling Frequency	Required Analytical Test Method
Methylene Blue Active Substances	µg/L	Grab	1/Month	[2]
Nitrate (as N)	mg/L	Grab	2/Month[15]	[2]
Nitrite (as N)	mg/L	Grab	2/Month[15]	[2]
Nitrate plus Nitrite (as N)	mg/L	Calculate	2/Month[15]	[2]
Temperature	°F	Grab	1/Day[3]	[2,4]
Total Coliform Organisms	MPN/100 mL	Grab	3/Week	[2]
Total Dissolved Solids	mg/L	Grab	1/Month	[2]
Turbidity	NTU	Meter	Continuous	[2]

Parameter	Units	Sample Type	Minimum Sampling Frequency	Required Analytical Test Method

[1] 24-hour flow proportional composite.

[2] Pollutants shall be analyzed using the analytical methods described in 40 CFR Part 136.

[3] pH and temperature shall be recorded at the time of ammonia sample collection.

[4] A hand-held field meter may be used, provided the meter utilizes a USEPA-approved algorithm/method and is calibrated and maintained in accordance with the manufacturer's instructions. A calibration and maintenance log for each meter used for monitoring required by this Monitoring and Reporting Program shall be maintained at the Facility.

[5] For priority pollutant constituents with effluent limitations, detection limits shall be below the effluent limitations. If the lowest minimum level (ML) published in Appendix 4 of the *Policy for Implementation of Toxics Standards for Inland Surface Waters, Enclosed Bays, and Estuaries of California* (State Implementation Plan or SIP) is not below the effluent limitation, the detection limit shall be the lowest ML. For priority pollutant constituents without effluent limitations, the detection limits shall be equal to or less than the lowest ML published in Appendix 4 of the SIP.

[6] In order to verify if bis (2-ethylhexyl) phthalate is truly present in the effluent discharge, the Discharger shall take steps to assure that sample containers, sampling apparatus, and analytical equipment are not sources of the detected contaminant.

[7] Total mercury samples shall be taken using clean hands/dirty hands procedures, as described in USEPA method 1669: Sampling Ambient Water for Trace Metals at EPA Water Quality Criteria Levels, for collection of equipment blanks (section 9.4.4.2), and shall be analyzed by USEPA method 1630/1631 (Revision E) with a method detection limit of 0.2 ng/L.

[8] Polycyclic aromatic hydrocarbons shall include anthracene, benzo(a)anthracene, benzo(a)pyrene, benzo(b)fluoranthene, benzo(ghi)perylene, benzo(k)fluoranthene, chrysene, dibenzo(a,h)anthracene, fluoranthene, fluorine, indeno(1,2,3-cd)pyrene, naphthalene, phenanthrene, and pyrene.

[9] Monitoring shall be conducted quarterly for the first 2 years following commencement of discharges to the Feather River at Discharge Point No. 001.

[10] See list of Priority Pollutants and Other Constituents of Concern in Attachment I.

[11] Volatile constituents shall be sampled in accordance with 40 CFR Part 136.

[12] Priority pollutants and other constituents of concern shall be sampled twice per calendar year following the date of permit adoption at Monitoring Location EFF-001, and shall be conducted concurrently with upstream receiving water sampling for priority pollutants, hardness (as $CaCO_3$), and pH. The Discharger is not required to conduct effluent monitoring for priority pollutants that have already been sampled in a given semi-annual period, as required in Table E-3. See Attachment I for more detailed requirements related to performing the priority pollutant monitoring.

[13] Total chlorine residual must be monitored with a method sensitive to and accurate at the permitted level of 0.01 mg/L.

[14] If chlorine disinfection is utilized at the Facility, the chemical used to dechlorinate the effluent (e.g., sulfur dioxide) shall be monitored continuously.

[15] Monitoring for nitrite and nitrate shall be conducted concurrently.

2. If the discharge is intermittent rather than continuous, then on the first day of each such intermittent discharge, the Discharger shall monitor and record data for all of the constituents listed above, except for priority pollutants, after which the frequencies of analysis given in the schedule shall apply for the duration of each such intermittent discharge. In no event shall the Discharger be required to monitor and record data more often than twice the frequencies listed in the schedule.

V. WHOLE EFFLUENT TOXICITY TESTING REQUIREMENTS

A. **Acute Toxicity Testing.** The Discharger shall conduct acute toxicity testing to determine whether the effluent is contributing acute toxicity to the receiving water. The Discharger shall meet the following acute toxicity testing requirements:

1. *Monitoring Frequency* - The Discharger shall perform monthly acute toxicity testing, concurrent with effluent ammonia sampling.

2. *Sample Types* - For static non-renewal and static renewal testing, the samples shall be flow proportional 24-hour composites and shall be representative of the volume and quality of the discharge. The effluent samples shall be taken at Monitoring Location EFF-001 when discharging at Discharge Point No. 001 or Discharge Point No. 002.

3. *Test Species* - Test species shall be larval stage (0 to 14 days old) rainbow trout (*Oncorhynchus mykiss*).

4. *Methods* - The acute toxicity testing samples shall be analyzed using EPA-821-R-02-012, Fifth Edition. Temperature, total residual chlorine, and pH shall be recorded at the time of sample collection. No pH adjustment may be made unless approved by the Executive Officer.

5. *Test Failure* - If an acute toxicity test does not meet all test acceptability criteria, as specified in the test method, the Discharger must re-sample and re-test as soon as possible, not to exceed 7 days following notification of test failure.

B. Chronic Toxicity Testing. The Discharger shall conduct three species chronic toxicity testing to determine whether the effluent is contributing chronic toxicity to the receiving water. The Discharger shall meet the following chronic toxicity testing requirements:

1. *Monitoring Frequency* - The Discharger shall perform quarterly three species chronic toxicity testing when discharging to the Feather River at Discharge Point No. 001, after the last unit process, prior to entering the receiving stream.

2. *Sample Types* - Effluent samples shall be flow proportional 24-hour composites and shall be representative of the volume and quality of the discharge. The effluent samples shall be taken at Monitoring Location EFF-001. The receiving water control shall be a grab sample obtained from Monitoring Location RSW-001, as identified in this Monitoring and Reporting Program.

3. *Sample Volumes* - Adequate sample volumes shall be collected to provide renewal water to complete the test in the event that the discharge is intermittent.

4. *Test Species* - Chronic toxicity testing measures sublethal (e.g., reduced growth, reproduction) and/or lethal effects to test organisms exposed to an effluent compared to that of the control organisms. The Discharger shall conduct chronic toxicity tests with:

   - The cladoceran, water flea, *Ceriodaphnia dubia* (survival and reproduction test);
   - The fathead minnow, *Pimephales promelas* (larval survival and growth test); and
   - The green alga, *Selenastrum capricornutum* (growth test).

5. *Methods* - The presence of chronic toxicity shall be estimated as specified in Short-term Methods for Estimating the Chronic Toxicity of Effluents and Receiving Waters to Freshwater Organisms, Fourth Edition, EPA/821-R-02-013, October 2002.

6. *Reference Toxicant* - As required by the SIP, all chronic toxicity tests shall be conducted with concurrent testing with a reference toxicant and shall be reported with the chronic toxicity test results.

7. *Dilutions* - For regular and accelerated chronic toxicity monitoring, it is not necessary to perform the test using a dilution series. The test may be performed using 100 percent effluent and two controls. For TRE monitoring, the chronic toxicity testing shall be performed using the dilution series identified in Table E-5, below. The receiving water control shall be used as the diluent (unless the receiving water is toxic).

Table E-5. Chronic Toxicity Testing Dilution Series

Sample	Dilutions (%)					Controls	
	100	75	50	25	12.5	Receiving Water	Laboratory Water
% Effluent	100	75	50	25	12.5	0	0
% Receiving Water	0	25	50	75	87.5	100	0
% Laboratory Water	0	0	0	0	0	0	100

8. *Test Failure* - The Discharger must re-sample and re-test as soon as possible, but no later than fourteen (14) days after receiving notification of a test failure. A test failure is defined as follows:

   a. The reference toxicant test or the effluent test does not meet all test acceptability criteria as specified in the *Short-term Methods for Estimating the Chronic Toxicity of Effluents and Receiving Waters to Freshwater Organisms, Fourth Edition*, EPA/821-R-02-013, October 2002 (Method Manual), and its subsequent amendments or revisions; or

   b. The percent minimum significant difference (PMSD) measured for the test exceeds the upper PMSD bound variability criterion in Table 6 on page 52 of the Method Manual. (A retest is only required in this case if the test results do not exceed the monitoring trigger specified in the Special Provision at section VI. 2.a.iii of the Order.)

C. **WET Testing Notification Requirements.** The Discharger shall notify the Central Valley Water Board within 24-hours after the receipt of test results exceeding the monitoring

trigger during regular or accelerated monitoring, or an exceedance of the acute toxicity effluent limitation.

D. **WET Testing Reporting Requirements.** All toxicity test reports shall include the contracting laboratory's complete report provided to the Discharger and shall be in accordance with the appropriate "Report Preparation and Test Review" sections of the method manuals. At a minimum, whole effluent toxicity monitoring shall be reported as follows:

1. **Chronic WET Reporting.** Regular chronic toxicity monitoring results shall be reported to the Central Valley Water Board within 30 days following completion of the test, and shall contain, at minimum:

   a. The dates of sample collection and initiation of each toxicity test; and

   b. The results compared to the numeric toxicity monitoring trigger.

   Additionally, the monthly discharger self-monitoring reports shall contain an updated chronology of chronic toxicity test results expressed in TUc, and organized by test species, type of test (survival, growth or reproduction), and monitoring frequency, i.e., either quarterly, monthly, accelerated, or Toxicity Reduction Evaluation (TRE).

2. **Acute WET Reporting.** Acute toxicity test results shall be submitted with the monthly discharger self-monitoring reports and reported as percent survival.

3. **TRE Reporting.** Reports for TREs shall be submitted in accordance with the schedule contained in the Discharger's approved TRE Workplan.

4. **Quality Assurance (QA).** The Discharger must provide the following information for QA purposes:

   a. Results of the applicable reference toxicant data with the statistical output page giving the species, NOEC, LOEC, type of toxicant, dilution water used, concentrations used, PMSD, and dates tested.

b. The reference toxicant control charts for each endpoint, which include summaries of reference toxicant tests performed by the contracting laboratory.

c. Any information on deviations or problems encountered and how they were dealt with.

VI. LAND DISCHARGE MONITORING REQUIREMENTS

A. Monitoring Locations PND-001, PND-002, PND-003, PND-004, PND-005, PND-006, and PND-007

1. The Discharger shall monitor the percolation ponds when water is present at Monitoring Locations PND-001, PND-002, PND-003, PND-004, PND-005, PND-006, and PND-007 as follows:

Table E-6. Pond Monitoring Requirements

Parameter	Units	Sample Type	Minimum Sampling Frequency	Required Analytical Test Method
Water Present	Yes/No	--	1/Week	--
Discharge to Ponds	Yes/No	--	1/Week	--
Freeboard	Feet[1]	--	1/Week	[2]
Dissolved Oxygen	mg/L	Grab[3]	1/Week	[2,4]
Odors	--	--	1/Week	--
Electrical Conductivity @ 25°C	µmhos/cm	Grab	1/Week	[2,4]

Parameter	Units	Sample Type	Minimum Sampling Frequency	Required Analytical Test Method

[1] Freeboard shall be monitored to the nearest tenth of a foot.

[2] Pollutants shall be analyzed using the analytical methods described in 40 CFR Part 136.

[3] Samples shall be collected at a depth of one foot from each pond in use, opposite the inlet, and analyzed for dissolved oxygen. Samples shall be collected between 0700 and 0900 hours. If dissolved oxygen results for any pond in use indicate noncompliance with the discharge specification, the Discharger shall implement corrective measures as specified in the operation and maintenance manual and monitor said pond daily until its dissolved oxygen stabilizes above 1 mg/L. If there is insufficient pond depth to accurately measure the dissolved oxygen concentration, the Discharger shall include in its report the pond depth and an explanation why dissolved oxygen monitoring was not performed.

[4] A hand-held field meter may be used, provided the meter utilizes a USEPA-approved algorithm/method and is calibrated and maintained in accordance with the manufacturer's instructions. A calibration and maintenance log for each meter used for monitoring required by this Monitoring and Reporting Program shall be maintained at the Facility.

2. The Discharger shall inspect the condition of the ponds once per week and record visual observations in a bound logbook. Notations shall include observations of whether weeds are developing in the water or along the bank, and their location; whether burrowing animals or insects are present; and the color of the ponds (e.g., dark sparkling green, dull green, yellow, gray, tan, brown). A summary of the entries made in the log during each month shall be submitted along with the monitoring report the following month. If the Discharger finds itself in violation of the Land Discharge Specifications, the Discharger shall briefly explain the action taken or to be taken to correct the violation. The Discharger shall certify in each annual report that it is in compliance with the Land Discharge Specifications.

VII. RECLAMATION MONITORING REQUIREMENTS - NOT APPLICABLE

VIII. RECEIVING WATER MONITORING REQUIREMENTS - SURFACE WATER AND GROUNDWATER

A. Monitoring Locations RSW-001, RSW-002, and RSW-003

1. The Discharger shall monitor the Feather River at Monitoring Locations RSW-001 and RSW-002 as follows.

Table E-7. Receiving Water Monitoring Requirements - Monitoring Locations RSW-001 and RSW-002

Parameter	Units	Sample Type	Minimum Sampling Frequency	Required Analytical Test Method
Conventional Pollutants				
pH	standard units	Grab	1/Week[1]	[2,3]
Priority Pollutants				
Bis (2-ethylhexyl) Phthalate	µg/L	Grab	1/Quarter	[2,4,5]
Carbon Tetrachloride	µg/L	Grab	1/Quarter	[2,4]
Dichlorobromomethane	µg/L	Grab	1/Quarter	[2,4]
Priority Pollutants and Other Constituents of Concern (see section X.D.4. below and Attachment I)[6,7]	See Attachment I	See Attachment I	See Attachment I	See Attachment I
Non-Conventional Pollutants				
Dissolved Oxygen	mg/L	Grab	1/Week	[2,3]
	% Saturation	Grab	1/Week	[2,3]
Electrical Conductivity @ 25°C	µmhos/cm	Grab	1/Week	[2,3]
Fecal Coliform Organisms	MPN/100 mL	Grab	1/Quarter	[2]
Hardness, Total (as $CaCO_3$)	mg/L	Grab	1/Month	[2]

Parameter	Units	Sample Type	Minimum Sampling Frequency	Required Analytical Test Method
Manganese, Total Recoverable	µg/L	Grab	1/Quarter	[2]
Methylene Blue Active Substances	µg/L	Grab	1/Quarter	[2]
Temperature	°F	Grab	1/Week[3]	[2,3]
Turbidity	NTU	Grab	1/Week	[2,3]

[1] Temperature and pH shall be determined at the time of effluent ammonia sampling.

[2] Pollutants shall be analyzed using the analytical methods described in 40 CFR Part 136.

[3] A hand-held field meter may be used, provided the meter utilizes a USEPA-approved algorithm/method and is calibrated and maintained in accordance with the manufacturer's instructions. A calibration and maintenance log for each meter used for monitoring required by this Monitoring and Reporting Program shall be maintained at the Facility.

[4] Pollutants shall be analyzed using the analytical methods described in 40 CFR Part 136; for priority pollutants the methods must meet the lowest MLs specified in Appendix 4 of the SIP, where no methods are specified for a given pollutant, by methods approved by this Central Valley Water Board or the State Water Board.

[5] In order to verify if bis (2-ethylhexyl) phthalate is truly present in the receiving water, the Discharger shall take steps to assure that sample containers, sampling apparatus, and analytical equipment are not sources of the detected pollutant.

[6] See list of Priority Pollutants and Other Constituents of Concern in Attachment I.

[7] Sampling shall be conducted concurrently with effluent monitoring for priority pollutants. See Attachment I for more detailed requirements related to performing priority pollutant monitoring.

2. Effective upon discharge to the Feather River, the Discharger shall monitor the Feather River at Monitoring Location RSW-003 as follows.

Table E-8. Receiving Water Monitoring Requirements - Monitoring Location RSW-003

Parameter	Units	Sample Type	Minimum Sampling Frequency	Required Analytical Test Method
Priority Pollutants				
Bis (2-ethylhexyl) Phthalate	µg/L	Grab	1/Quarter	[1,2,3]
Carbon Tetrachloride	µg/L	Grab	1/Quarter	[1,2]

Parameter	Units	Sample Type	Minimum Sampling Frequency	Required Analytical Test Method
Dichlorobromomethane	µg/L	Grab	1/Quarter	[1,2]
Non-Conventional Pollutants				
Manganese, Total Recoverable	µg/L	Grab	1/Quarter	[1]
Methylene Blue Active Substances	µg/L	Grab	1/Quarter	[1]

[1] Pollutants shall be analyzed using the analytical methods described in 40 CFR Part 136.

[2] Pollutants shall be analyzed using the analytical methods described in 40 CFR Part 136; for priority pollutants the methods must meet the lowest MLs specified in Appendix 4 of the SIP, where no methods are specified for a given pollutant, by methods approved by this Central Valley Water Board or the State Water Board.

[3] In order to verify if bis (2-ethylhexyl) phthalate is truly present in the receiving water, the Discharger shall take steps to assure that sample containers, sampling apparatus, and analytical equipment are not sources of the detected pollutant.

3. In conducting the receiving water sampling, a log shall be kept of the receiving water conditions throughout the reach bounded by Monitoring Locations RSW-001 and RSW-002. Attention shall be given to the presence or absence of:

a. Floating or suspended matter;
b. Discoloration;
c. Bottom deposits;
d. Aquatic life;
e. Visible films, sheens, or coatings;
f. Fungi, slimes, or objectionable growths; and
g. Potential nuisance conditions.

Notes on receiving water conditions shall be summarized in the monitoring report.

B. Monitoring Locations GW-001, GW-002, and GW-003

1. Groundwater monitoring shall be conducted semi-annually. Groundwater monitoring may be discontinued 2 years following the initial use of the percolation ponds for

emergency discharges. Groundwater grab samples shall be collected from all groundwater monitoring wells. Prior to sampling, the groundwater elevations shall be measured and the wells shall be purged of at least three well volumes until temperature, pH, and electrical conductivity have stabilized. Depth to groundwater shall be measured to the nearest 0.01 feet. Groundwater monitoring at Monitoring Locations GW-001, GW-002, and GW-003 shall include, at a minimum, the following.

Table E-9. Groundwater Monitoring Requirements

Parameter	Units	Sample Type	Minimum Sampling Frequency[3]	Required Analytical Test Method
Depth to Groundwater	±0.01 feet	Measurement	2/Year[1]	--
Groundwater Elevation	±0.01 feet	Grab	2/Year	--
Gradient	feet/feet	Calculated	2/Year	--
Gradient Direction	degrees	Calculated	2/Year	--
pH	standard units	Grab	2/Year	[2]
Electrical Conductivity @ 25°C	µmhos/cm	Grab	2/Year	[2]
Total Dissolved Solids	mg/L	Grab	2/Year	[2]
Total Nitrogen	mg/L	Grab	2/Year	[2]
Nitrate Nitrogen, Total (as N)	mg/L	Grab	2/Year	[2]
Total Kjeldahl Nitrogen	mg/L	Grab	2/Year	[2]
Fecal Coliform Organisms	MPN/100 mL	Grab	2/Year	[2]
Iron, Total Recoverable	µg/L	Grab	2/Year	[2]
Manganese, Total Recoverable	µg/L	Grab	2/Year	[2]
Bromoform	µg/L	Grab	2/Year	[2]
Chlorodibromomethane	µg/L	Grab	2/Year	[2]
Chloroform	µg/L	Grab	2/Year	[2]
Dichlorobromomethane	µg/L	Grab	2/Year	[2]

[1] Groundwater elevation shall be used to calculate the direction and gradient of groundwater flow. Elevations shall be measured to the nearest one-hundredth of a foot from mean sea level. The groundwater elevation shall be measured prior to purging the wells.

[2] Pollutants shall be analyzed using the analytical methods described in 40 CFR Part 136.

[3] Samples shall be collected once from January through June, and once form July through December

IX. OTHER MONITORING REQUIREMENTS

A. Biosolids

1. Monitoring Location BIO-001

a. A composite sample of sludge shall be collected once per permit term at Monitoring Location BIO-001 in accordance with EPA's *POTW Sludge Sampling and Analysis Guidance Document*, August 1989, and tested for priority pollutants listed in 40 CFR Part 122, Appendix D, Tables II and III (excluding total phenols).

b. A composite sample of sludge shall be collected annually at Monitoring Location BIO-001 in accordance with USEPA's *POTW Sludge Sampling and Analysis Guidance Document*, August 1989, and tested for the metals listed in Title 22.

c. Sampling records shall be retained for a minimum of 5 years. A log shall be maintained of sludge quantities generated and of handling and disposal activities. The frequency of entries is discretionary; however, the log must be complete enough to serve as a basis for part of the annual report.

B. Municipal Water Supply

1. Monitoring Location SPL-001

The Discharger shall monitor the municipal water supply at SPL-001 as follows.

Table E-10. Municipal Water Supply Monitoring Requirements

Parameter	Units	Sample Type	Minimum Sampling Frequency	Required Analytical Test Method
Total Dissolved Solids[1]	mg/L	Grab	1/Year	[2]
Electrical Conductivity @ 25°C[1]	µmhos/cm	Grab	1/Year	[2]

Parameter	Units	Sample Type	Minimum Sampling Frequency	Required Analytical Test Method

[1] If the water supply is from more than one source, the total dissolved solids and electrical conductivity shall be reported as a weighted average and include copies of supporting calculations.

[2] Pollutants shall be analyzed using the analytical methods described in 40 CFR Part 136.

X. REPORTING REQUIREMENTS

A. General Monitoring and Reporting Requirements

1. The Discharger shall comply with all Standard Provisions (Attachment D) related to monitoring, reporting, and recordkeeping.

2. Upon written request of the Central Valley Water Board, the Discharger shall submit a summary monitoring report. The report shall contain both tabular and graphical summaries of the monitoring data obtained during the previous year(s).

3. **Compliance Time Schedules.** For compliance time schedules included in the Order, the Discharger shall submit to the Central Valley Water Board, on or before each compliance due date, the specified document or a written report detailing compliance or noncompliance with the specific date and task. If noncompliance is reported, the Discharger shall state the reasons for noncompliance and include an estimate of the date when the Discharger will be in compliance. The Discharger shall notify the Central Valley Water Board by letter when it returns to compliance with the compliance time schedule.

4. The Discharger shall report to the Central Valley Water Board any toxic chemical release data it reports to the State Emergency Response Commission within 15 days of reporting the data to the Commission pursuant to section 313 of the "*Emergency Planning and Community Right to Know Act*" of 1986.

B. Self Monitoring Reports (SMRs)

1. The Discharger shall continue to submit eSMRs using the State Water Board's CIWQS Program Web site (http://www.waterboards.ca.gov/ciwqs/index.html). The

Discharger shall maintain sufficient staffing and resources to ensure it submits eSMRs during the effective duration of this Order. This includes provision of training and supervision of individuals (e.g., Discharger personnel or consultant) on how to prepare and submit eSMRs.

2. Monitoring periods and reporting for all required monitoring shall be completed according to the following schedule:

Table E-11. Monitoring Periods and Reporting Schedule

Sampling Frequency	Monitoring Period Begins On…	Monitoring Period	SMR Due Date
Continuous	Permit effective date	All	First day of second calendar month following month of sampling.
1/Day	Permit effective date	(Midnight through 11:59 PM) or any 24-hour period that reasonably represents a calendar day for purposes of sampling.	First day of second calendar month following month of sampling.
3/Week	Permit effective date	Sunday through Saturday	First day of second calendar month following month of sampling.
1/Week	Permit effective date	Sunday through Saturday	First day of second calendar month following month of sampling.
2/Month	Permit effective date	First day of calendar month through last day of calendar month	First day of second calendar month following month of sampling.
1/Month	Permit effective date	First day of calendar month through last day of calendar month	First day of second calendar month following sampling
1/Quarter	Permit effective date	1 January through 31 March 1 April through 30 June 1 July through 30 September 1 October through 31 December	1 May 1 August 1 November 1 February (of the following year)
2/Year	Permit effective	1 January through 30 June	1 August

Sampling Frequency	Monitoring Period Begins On…	Monitoring Period	SMR Due Date
	date	1 July through 31 December	1 February (of the following year)
1/Year	Permit effective date	1 January through 31 December	1 February (of the following year)

3. **Reporting Protocols.** The Discharger shall report with each sample result the applicable reported Minimum Level (ML) and the current Method Detection Limit (MDL), as determined by the procedure in 40 CFR Part 136.

   The Discharger shall report the results of analytical determinations for the presence of chemical constituents in a sample using the following reporting protocols:

   a. Sample results greater than or equal to the reported ML shall be reported as measured by the laboratory (i.e., the measured chemical concentration in the sample).

   b. Sample results less than the RL, but greater than or equal to the laboratory's MDL, shall be reported as "Detected, but Not Quantified," or DNQ. The estimated chemical concentration of the sample shall also be reported.

   For the purposes of data collection, the laboratory shall write the estimated chemical concentration next to DNQ as well as the words "Estimated Concentration" (may be shortened to "Est. Conc."). The laboratory may, if such information is available, include numerical estimates of the data quality for the reported result. Numerical estimates of data quality may be percent accuracy (+ a percentage of the reported value), numerical ranges (low to high), or any other means considered appropriate by the laboratory.

   c. Sample results less than the laboratory's MDL shall be reported as "Not Detected," or ND.

d. Dischargers are to instruct laboratories to establish calibration standards so that the ML value (or its equivalent if there is differential treatment of samples relative to calibration standards) is the lowest calibration standard. At no time is the Discharger to use analytical data derived from extrapolation beyond the lowest point of the calibration curve.

4. **Compliance Determination.** Compliance with effluent limitations for priority pollutants shall be determined using sample reporting protocols defined above and in Attachment A of this Order. For purposes of reporting and administrative enforcement by the Central Valley Water Board and the State Water Board, the Discharger shall be deemed out of compliance with effluent limitations if the concentration of the priority pollutant in the monitoring sample is greater than the effluent limitation and greater than or equal to the reporting level (RL).

5. **Multiple Sample Data.** When determining compliance with an AMEL, AWEL, or MDEL for priority pollutants and more than one sample result is available, the Discharger shall compute the arithmetic mean unless the data set contains one or more reported determinations of "Detected, but Not Quantified" (DNQ) or "Not Detected" (ND). In those cases, the Discharger shall compute the median in place of the arithmetic mean in accordance with the following procedure.

   a. The data set shall be ranked from low to high, ranking the reported ND determinations lowest, DNQ determinations next, followed by quantified values (if any). The order of the individual ND or DNQ determinations is unimportant.

   b. The median value of the data set shall be determined. If the data set has an odd number of data points, then the median is the middle value. If the data set has an even number of data points, then the median is the average of the two values around the middle unless one or both of the points are ND or DNQ, in which case the median value shall be the lower of the two data points where DNQ is lower than a value and ND is lower than DNQ.

6. **Reporting Requirements.** In reporting the monitoring data, the Discharger shall arrange the data in tabular form so that the date, the constituents, and the concentrations are readily discernible.

   a. The data shall be summarized to clearly illustrate whether the facility is operating in compliance with interim and/or final effluent limitations or with other waste discharge requirements (e.g., discharge specifications, receiving water limitations, special provisions, etc.).

   b. Reports must clearly show when discharging to Discharge Point Nos. 001 and 002 or other permitted discharge locations. Reports must show the date and time that the discharge started and stopped at each location.

   c. The highest daily maximum for the month and monthly and weekly averages shall be determined and recorded as needed to demonstrate compliance.

7. **Calculation Requirements.** The following shall be calculated and reported in the SMRs:

   a. **Annual Average Limitations.** For constituents with effluent limitations specified as "annual average" (manganese and methylene blue active substances) the Discharger shall report the annual average in the December SMR. The annual average shall be calculated as the average of the samples gathered for the calendar year.

   b. **Mass Loading Limitations.** For BOD_5, TSS, and ammonia, the Discharger shall calculate and report the mass loading (lbs/day) in the SMRs. The mass loading shall be calculated as follows:

   Mass Loading (lbs/day) = Flow (MGD) x Concentration (mg/L) x 8.34

   When calculating daily mass loading, the daily average flow and constituent concentration shall be used. For weekly average mass loading, the weekly average flow and constituent concentration shall be used. For monthly average

mass loading, the monthly average flow and constituent concentration shall be used.

c. **Removal Efficiency (BOD_5 and TSS).** The Discharger shall calculate and report the percent removal of BOD_5 and TSS in the SMRs. The percent removal shall be calculated as specified in Section VII.A of the Limitations and Discharge Requirements.

d. **Total Coliform Organisms Effluent Limitations.** The Discharger shall calculate and report the 7-day median of total coliform organisms for the effluent. The 7-day median of total coliform organisms shall be calculated as specified in Section VII.D of the Limitations and Discharge Requirements.

e. **Dissolved Oxygen Receiving Water Limitations.** The Discharger shall calculate and report monthly in the self-monitoring report: i) the dissolved oxygen concentration, ii) the percent of saturation in the main water mass, and iii) the 95th percentile dissolved oxygen concentration.

f. **Turbidity Receiving Water Limitations.** The Discharger shall calculate and report the turbidity increase in the receiving water applicable to the natural turbidity condition specified in Section V.A.17.a-e. of the Limitations and Discharge Requirements.

g. **Temperature Receiving Water Limitations.** The Discharger shall calculate and report the temperature increase in the receiving water based on the difference in temperature at RSW-001 and RSW-002.

8. The Discharger shall submit SMRs in accordance with the following requirements:

a. When electronic submittal of data is required and CIWQS does not provide for entry into a tabular format within the system, the Discharger shall electronically submit the data in a tabular format as an attachment. The Discharger is not required to duplicate the submittal of data that is entered in a tabular format within CIWQS.

b. The Discharger shall attach a cover letter to the SMR. The information contained in the cover letter shall clearly identify violations of the WDRs; discuss corrective actions taken or planned; and the proposed time schedule for corrective actions. Identified violations must include a description of the requirement that was violated and a description of the violation.

c. SMRs must be submitted to the Central Valley Water Board, signed and certified as required by the Standard Provisions (Attachment D), to the address listed below:

Regional Water Quality Control Board
Central Valley Region
NPDES Compliance and Enforcement Unit
11020 Sun Center Dr., Suite #200
Rancho Cordova, CA 95670-6114

C. Discharge Monitoring Reports (DMRs)

1. As described in section X.B.1 above, at any time during the term of this permit, the State Water Board or Central Valley Water Board may notify the Discharger to electronically submit SMRs that will satisfy federal requirements for submittal of DMRs. Until such notification is given, the Discharger shall submit DMRs in accordance with the requirements described below.

2. DMRs must be signed and certified as required by the standard provisions (Attachment D). The Discharger shall submit the original DMR and one copy of the DMR to the address listed below:

STANDARD MAIL	FEDEX/UPS/ OTHER PRIVATE CARRIERS
State Water Resources Control Board Division of Water Quality c/o DMR Processing Center PO Box 100 Sacramento, CA 95812-1000	State Water Resources Control Board Division of Water Quality c/o DMR Processing Center 1001 I Street, 15th Floor Sacramento, CA 95814

3. All discharge monitoring results must be reported on the official USEPA pre-printed DMR forms (EPA Form 3320-1). Forms that are self-generated will not be accepted unless they follow the exact same format of EPA Form 3320-1.

D. Other Reports

1. **Progress Reports.** As specified in the compliance time schedules required in the Special Provisions contained in section VI.C. of the Order, progress reports shall be submitted in accordance with the following reporting requirements. At minimum, the progress reports shall include a discussion of the status of final compliance, whether the Discharger is on schedule to meet the final compliance date or not, and the remaining tasks to meet the final compliance date.

Table E-12. Reporting Requirements for Special Provisions Progress Reports

Special Provision	Reporting Requirements
Updated Initial Investigative TRE Workplan (Section VI.C.2.a.)	Submit updated Workplan by **29 October 2012.**
Mixing Zone Verification Workplan and Schedule (Section VI.C.2.b.)	Submit Workplan **within 6 months of adoption of this Order.**

Special Provision	**Reporting Requirements**
Bis (2-ethylhexyl) Phthalate Study (Section VI.C.2.c.)	Submit Study by **6 months following completion of final monitoring event during third year of permit term**
Polycyclic Aromatic Hydrocarbons (PAHs) Study (Section VI.C.2.d.)	Submit Study by **6 months following completion of final monitoring event during third year of permit term**
Dichlorobromomethane Study (Section VI.C.2.e.)	Submit Study by **6 months following completion of 2 years of discharging to Discharge Point No. 001**
Salinity Evaluation and Minimization Plan (Section VI.C.3.a.)	Submit Plan **within 9 months of adoption of this Order.**

2. The Discharger shall report the results of any special studies, acute and chronic toxicity testing, TRE/TIE, PMP, and Pollution Prevention Plan required by Special Provision VI.C of this Order. The Discharger shall submit reports with the first monthly SMR scheduled to be submitted on or immediately following the report due date.

3. Within 60 days of permit adoption, the Discharger shall submit a report outlining minimum levels, method detection limits, and analytical methods for approval, with a goal to achieve detection levels below applicable water quality criteria. At a minimum, the Discharger shall comply with the monitoring requirements for CTR constituents as outlined in section 2.3 and 2.4 of the SIP.

4. The Discharger's sanitary sewer system collects wastewater using sewers, pipes, pumps, and/or other conveyance systems and directs the raw sewage to the wastewater treatment plant. A "sanitary sewer overflow" is defined as a discharge to ground or surface water from the sanitary sewer system at any point upstream of

the wastewater treatment plant. Sanitary sewer overflows are prohibited by this Order. All violations must be reported as required in Standard Provisions. Facilities (such as wet wells, regulated impoundments, tanks, highlines, etc.) may be part of a sanitary sewer system and discharges to these facilities are not considered sanitary sewer overflows, provided that the waste is fully contained within these temporary storage facilities.

5. **Effluent and Receiving Water Characterization Study.** An effluent and receiving water monitoring study is required to ensure adequate information is available for the next permit renewal. The Discharger shall perform semi-annual and annual monitoring at Monitoring Location EFF-001 for all priority pollutants and other constituents of concern as described in Attachment I. The Discharger shall conduct annual receiving water monitoring at Monitoring Location RSW-001 for all priority pollutants and other constituents of concern as described in Attachment I. The report shall be completed in conformance with the following schedule:

Task	Compliance Date
i. Submit Work Plan and Time Schedule	No later than 6 months from adoption of this Order
ii. Conduct monitoring	Annual and semi-annually at Monitoring Location EFF-001 Annually at Monitoring Location RSW-001
iii. Submit Final Report	6 months following completion of final monitoring event

6. **Annual Operations Report.** By 1 February of each year, the Discharger shall submit a written report to the Executive Officer containing the following:

   a. The names, certificate grades, and general responsibilities of all persons employed at the Facility.

   b. The names and telephone numbers of persons to contact regarding the plant for emergency and routine situations.

c. A statement certifying when the flow meter(s) and other monitoring instruments and devices were last calibrated, including identification of who performed the calibration.

d. A statement certifying whether the current operation and maintenance manual, and contingency plan, reflect the wastewater treatment plant as currently constructed and operated, and the dates when these documents were last revised and last reviewed for adequacy.

e. The Discharger may also be requested to submit an annual report to the Central Valley Water Board with both tabular and graphical summaries of the monitoring data obtained during the previous year. Any such request shall be made in writing. The report shall discuss the compliance record. If violations have occurred, the report shall also discuss the corrective actions taken and planned to bring the discharge into full compliance with the waste discharge requirements.

ATTACHMENT F - FACT SHEET

Table of Contents

I. Permit Information F-4
II. Facility Description F-6
A. Description of Wastewater and Biosolids Treatment or Controls F-6
B. Discharge Points and Receiving Waters F-7
C. Summary of Existing Requirements and Self-Monitoring Report (SMR) Data F-8
D. Compliance Summary F-17
E. Planned Changes F-19
III. Applicable Plans, Policies, and Regulations F-20
A. Legal Authorities F-20
B. California Environmental Quality Act (CEQA) F-21
C. State and Federal Regulations, Policies, and Plans F-21
D. Impaired Water Bodies on CWA 303(d) List F-23
E. Other Plans, Polices and Regulations F-24
IV. Rationale For Effluent Limitations and Discharge Specifications F-27
A. Discharge Prohibitions F-29
B. Technology-Based Effluent Limitations F-30
1. Scope and Authority F-30
2. Applicable Technology-Based Effluent Limitations F-31
C. Water Quality-Based Effluent Limitations (WQBELs) F-33
1. Scope and Authority F-33
2. Applicable Beneficial Uses and Water Quality Criteria and Objectives F-34
3. Determining the Need for WQBELs F-57
4. WQBEL Calculations F-104
5. Whole Effluent Toxicity (WET) F-108
D. Final Effluent Limitations F-112
1. Mass-based Effluent Limitations F-112

2. Averaging Periods for Effluent Limitations F-113
3. Satisfaction of Anti-Backsliding Requirements F-114
4. Satisfaction of Antidegradation Policy F-117
5. Stringency of Requirements for Individual Pollutants F-131
E. Interim Effluent Limitations - Not Applicable F-136
F. Land Discharge Specifications F-136
G. Reclamation Specifications - Not Applicable F-136
V. Rationale for Receiving Water Limitations F-136
A. Surface Water F-137
B. Groundwater F-140
VI. Rationale for Monitoring and Reporting Requirements F-142
A. Influent Monitoring F-142
B. Effluent Monitoring F-142
C. Whole Effluent Toxicity Testing Requirements F-147
D. Receiving Water Monitoring F-147
1. Surface Water F-147
2. Groundwater F-150
E. Other Monitoring Requirements F-152
1. Biosolids Monitoring F-152
2. Municipal Water Supply Monitoring F-153
3. Land Discharge Monitoring F-153
4. Effluent and Receiving Water Characterization Study F-153
VII. Rationale for Provisions F-153
A. Standard Provisions F-153
B. Special Provisions F-154
1. Reopener Provisions F-154
2. Special Studies and Additional Monitoring Requirements F-156
3. Best Management Practices and Pollution Prevention F-161
4. Construction, Operation, and Maintenance Specifications F-161
5. Special Provisions for Municipal Facilities (POTWs Only) F-162
6. Other Special Provisions F-164

7. Compliance Schedules - Not Applicable F-164
VIII. Public Participation F-164
A. Notification of Interested Parties F-164
B. Written Comments F-165
C. Public Hearing F-165
D. Waste Discharge Requirements Petitions F-166
E. Information and Copying F-166
F. Register of Interested Persons F-166
G. Additional Information F-166

List of Tables

Table F-1. Facility Information F-4
Table F-2. Historic Effluent Limitations - Discharge Point No. 001 ..... F-8
Table F-3. Historic Effluent Limitations and Monitoring Data - Discharge Point No. 002 ..... F-12
Table F-4. Groundwater Monitoring Data F-25
Table F-5. Summary of Technology-based Effluent Limitations F-32
Table F-6. Basin Plan Beneficial Uses F-35
Table F-7. Dilution Credits Associated with Performance-based Effluent Limitations F-41
Table F-8. Copper ECA Evaluation F-53
Table F-9. Lead ECA Evaluation F-56
Table F-10. Summary of ECA Evaluations for CTR Hardness-dependent Metals F-56
Table F-11. Central Valley Region Site-specific Toxicity Data F-63
Table F-12. Site-Specific pH and Hardness Characteristics F-65
Table F-13. Salinity Water Quality Criteria/Objectives F-99
Table F-14. Feather River EC Concentrations F-103
Table F-15. Summary of Water Quality-Based Effluent Limitations F-106
Table F-16. Summary of Costs for Alternatives Analysis F-123
Table F-17. Summary of Final Effluent Limitations F-132

ATTACHMENT F - FACT SHEET

As described in the Findings in section II of this Order, this Fact Sheet includes the legal requirements and technical rationale that serve as the basis for the requirements of this Order.

This Order has been prepared under a standardized format to accommodate a broad range of discharge requirements for Dischargers in California. Only those sections or subsections of this Order that are specifically identified as "not applicable" have been determined not to apply to this Discharger. Sections or subsections of this Order not specifically identified as "not applicable" are fully applicable to this Discharger.

I. PERMIT INFORMATION

The following table summarizes administrative information related to the Facility.

Table F-1. Facility Information

WDID	5A580100002
Discharger	Linda County Water District
Name of Facility	Wastewater Treatment Plant
Facility Address	909 Myrna Avenue
	Marysville, CA 95901
	Yuba and Sutter County
Facility Contact, Title and Phone	Doug Lofton, General Manager, (530) 743-2043
Authorized Person to Sign and Submit Reports	Doug Lofton, General Manager, (530) 743-2043
Mailing Address	1280 Scales Street, Marysville, CA 95901
Billing Address	Same as Mailing Address
Type of Facility	Publically Owned Treatment Works (POTW)
Major or Minor Facility	Major
Threat to Water Quality	2
Complexity	A
Pretreatment Program	Not Applicable

Reclamation Requirements	Not Applicable
Facility Permitted Flow	Existing Plant - 1.8 million gallons per day (MGD) Upgraded Plant - 5.0 MGD Upgraded and Regionalized Plant - 6.7 MGD
Facility Design Flow	Existing Plant - 1.8 MGD Upgraded Plant - 5.0 MGD Upgraded and Regionalized Plant - 6.7 MGD
Watershed	Lower Feather
Receiving Water	Feather River
Receiving Water Type	Inland Surface Water

A. Linda County Water District (hereinafter Discharger) is the owner and operator of the Linda County Wastewater Treatment Plant (hereinafter Facility), a POTW.

For the purposes of this Order, references to the "discharger" or "permittee" in applicable federal and state laws, regulations, plans, or policy are held to be equivalent to references to the Discharger herein.

B. The Facility discharges wastewater to the Feather River, a water of the United States, and is currently regulated by Order No. R5-2006-0096 which was adopted on 22 September 2006, and expired on 11 November 2011. The terms and conditions of the current Order have been automatically continued and remain in effect until new Waste Discharge Requirements (WDRs) and National Pollutant Discharge Elimination System (NPDES) permit are adopted pursuant to this Order.

C. The Discharger filed a report of waste discharge (ROWD) and submitted an application for renewal of its WDRs and NPDES permit on 11 May 2011. Supplemental information was requested between 28 July 2011 and 5 August 2011 and received by 9 August 2011. A site visit was conducted on 2 June 2011 to observe operations and collect additional data to develop permit limitations and conditions.

II. FACILITY DESCRIPTION

The Discharger provides sewerage service for the community of Linda and portions of unincorporated Yuba County south of Marysville, and serves a population of approximately 12,000. The current design average dry weather flow capacity of the Facility is 1.8 MGD. As described further in Section II.A of this Fact Sheet, the Discharger is currently constructing upgrades and expanding the Facility to provide tertiary treatment for a total design average dry weather flow capacity of 5.0 MGD. The Discharger is also planning a regionalization project with the City of Marysville that will increase the Facility's capacity to accommodate an average dry weather flow of 1.7 MGD from the City of Marysville Wastewater Treatment Plant (WWTP), thus increasing the total average dry weather flow of the Facility to 6.7 MGD.

A. Description of Wastewater and Biosolids Treatment or Controls

The existing treatment system at the Facility consists of the headworks, two primary clarifiers, trickling filter, secondary clarifier, chlorine contact basin, and dechlorination. The Discharger discharges to land using a series of seven percolation ponds that lie within the Feather River floodplain. The pond berms have been overtopped during high river stages four times since the Facility was constructed in 1960, as recently as January 2006, resulting in wastewater from the ponds being discharged to the Feather River. The Discharger also maintains a wastewater outfall pipeline terminating on the bank of the Feather River; however, this outfall is rarely used and was not used during the term of Order No. R5-2006-0096. Primary and secondary sludge solids removed in the primary and secondary clarification process are pumped to a high-rate anaerobic digestion process for organics stabilization and supernatant separation. The stabilized and thickened sludge is periodically withdrawn and spread over sand drying beds for additional dewatering. Once per year, the drying beds are manually cleaned and the dewatered solids are taken offsite for landfill disposal.

The Discharger is currently upgrading and expanding the Facility to provide tertiary treatment for up to 5.0 MGD. The upgraded and expanded treatment system will

consist of a headworks, two rectangular primary clarifiers, four air activated sludge basins (that will provide nitrification and denitrification), two secondary clarifiers, compressible media filters, chlorine contact basin, and dechlorination. A new rotary drum thickener will be installed for waste activated sludge and the existing sludge digester system will continue to be used until its capacity is reached. Digested sludge will be pumped to a new dewatering system, which will consist of a combination of facultative sludge lagoons and sludge drying beds.

The Discharger also proposed in the ROWD an increase in effluent flow from the Facility to accommodate an additional average dry weather flow of 1.7 MGD from the City of Marysville. The proposed regionalization project would include pumping screened raw wastewater from the City of Marysville's existing influent pump station approximately 3.4 miles through a force main to the primary influent structure of the Facility. Modifications to the City of Marysville WWTP include the addition of a flow equalization tank for temporarily holding peak wet weather flows and the addition of an odor and corrosion control chemical dosing system to inhibit the formation of sulfides in the force main.

B. Discharge Points and Receiving Waters

1. The Facility is located in Section 1, T14N, R3E, MDB&M, as shown in Attachment B, a part of this Order.

2. The Facility is permitted to discharge treated municipal wastewater via Discharge Point No. 002 to the Feather River, a water of the United States, via evaporation and percolation ponds within the floodplain at a point latitude 39° 05' 42" N and longitude 121° 35' 20" W. Upon completion of the Facility upgrade and expansion project and any necessary improvements to the existing outfall structure, the Discharger plans to continue to utilize Ponds 3, 4, 5, 6, and 7 only for emergency discharges.

3. The Facility is permitted to discharge treated municipal wastewater via Discharge Point No. 001 to the Feather River, a water of the United States, via the existing

bank outfall at a point latitude 39° 05' 42" N and longitude 121° 35' 32" W upon completion of the Facility upgrade and expansion project.

C. Summary of Existing Requirements and Self-Monitoring Report (SMR) Data

1. Effluent limitations contained in Order No. R5-2006-0096 for discharges from Discharge Point No. 001 (Monitoring Location EFF-001) from Order No. R5-2006-0096 are as follows. The Facility discontinued discharging through Discharge Point No. 001 in 2000 and has not yet resumed discharging from Discharge Point No. 001. Thus, no effluent data is available at Discharge Point No. 001 from the term of Order No. R5-2006-0096.

Table F-2. Historic Effluent Limitations - Discharge Point No. 001

Parameter	Units	Effluent Limitation		
		Average Monthly	Average Weekly	Maximum Daily
Bis (2-ethylhexyl) Phthalate	µg/L	1.8[1]	--	4.1[1]
	lbs/day[2]	0.075[1]	--	0.17[1]
Chromium (VI), Total Recoverable	µg/L	8.1[1]	--	16[1]
	lbs/day[2]	0.34[1]	--	0.68[1]
Copper, Total Recoverable	µg/L	2.4[1]	--	4.5[1]
	lbs/day[2]	0.10[1]	--	0.19[1]
Cyanide, Total Recoverable	µg/L	4.3[1]	--	8.5[1]
	lbs/day[2]	0.18[1]	--	0.36[1]
Dibenzo(a,h)anthracene	µg/L	0.0044[1]	--	0.0088[1]
	lbs/day[2]	0.00018[1]	--	0.00037[1]
Dichlorobromomethane	µg/L	2.6[1]	--	5.3[1]
Lead, Total Recoverable	µg/L	0.43[1]	--	1.2[1]
	lbs/day[2]	0.018[1]	--	0.052[1]
Tetrachloroethene	µg/L	21[1]	--	56[1]
Zinc, Total Recoverable	µg/L	21[1]	--	43[1]
	lbs/day[2]	0.88[1]	--	1.8[1]

Parameter	Units	Effluent Limitation		
		Average Monthly	Average Weekly	Maximum Daily
Biochemical Oxygen Demand (5-day @ 20°C)	mg/L	10[3]	15[3]	20[3]
	lbs/day[2]	420[3]	630[3]	830[3]
	% removal	85[3]	--	--
Total Suspended Solids	mg/L	10[3]	15[3]	20[3]
	lbs/day[2]	420[3]	630[3]	830[3]
	% removal	85[3]	--	--
Settleable Solids	ml/L	0.1[3]	--	0.2[3]
pH	standard units	--	--	6.5 - 8.0
Aluminum	µg/L	74[3]	--	140[3]
Chloroform	µg/L	26[3]	--	--
	lbs/day[2]	1.1[3]	--	--
Diazinon	µg/L	0.040[3]	--	0.080[3]
	lbs/day[2]	0.0017[3]	--	0.0033[3]
cis-1,2-Dichloroethene	µg/L	17[3]	--	--
Iron, Total Recoverable	µg/L	300[3]	--	--
Manganese, Total Recoverable	µg/L	50[3]	--	--
Methoxychlor	µg/L	--	--	0.03[3,4]
Methylene Blue Active Substances	mg/L	30[3]	--	--
Nitrite (as N)	mg/L	1[3]	--	--
	lbs/day[2]	40[3]	--	--
Nitrite + Nitrate (as N)	mg/L	10[3]	--	--
	lbs/day[2]	400[3]	--	--
Oil and Grease	mg/L	10[3]	--	15[3]
	lbs/day[2]	420[3]	--	630[3]
Organochlorine Pesticides	µg/L	--	--	ND[3,5]
Thiobencarb	µg/L	2.6[3]	--	--
Electrical Conductivity @ 25°C	µmhos/cm	780[3,6]	--	--

Parameter	Units	Effluent Limitation		
		Average Monthly	Average Weekly	Maximum Daily
Chlorine, Total Residual	mg/L	--	0.011[3,7]	0.019[3,8]
	lbs/day[2]	--	0.46[3,7]	0.79[3,8]
Total Ammonia (as N)	mg/L	1.22[3,9]	--	5.62[3,8,9]
		1.80[3,10]	--	5.62[3,8,10]
	lbs/day[2]	50.9[3,9]	--	234[3,8,9]
		75.1[3,10]	--	234[3,8,10]
Turbidity	NTU	10[3,11]	5[3,12]	2[3,13]
Total Coliform Organisms	MPN/100 mL	23[3,14]	2.2[3,15]	240[3,11]
Mercury	lbs/month	0.016[3,16]	--	--
Acute Toxicity	% survival	--	--	[3,17]
Average dry weather discharge flow	MGD	--	--	5.0[3]

Parameter	Units	Effluent Limitation		
		Average Monthly	Average Weekly	Maximum Daily

[1] Final effluent limitations effective upon commencement of discharge from the proposed diffuser at EFF-001 or 18 May 2010, whichever is sooner.

[2] Based upon a design treatment capacity of 5.0 MGD.

[3] Final effluent limitation effective upon commencement of discharge from the proposed diffuser at EFF-001 or 21 September 2011, whichever is sooner.

[4] Applied as an instantaneous maximum effluent limitation.

[5] The non-detectable (ND) limitation applies to each individual pesticide. No individual pesticide may be present in the discharge at detectable concentrations. The Discharger shall use USEPA standard analytical techniques with the lowest possible detectable level for organochlorine pesticides with a maximum acceptable detection level of 0.05 µg/L.

[6] The 30-day 90th percentile effluent electrical conductivity shall not exceed 780 µmhos/cm.

[7] Applied as a 4-day average effluent limitation.

[8] Applied as a 1-hour average effluent limitation.

[9] Effective 1 April through 31 October.

[10] Effective 1 November through 31 March.

[11] Not to be exceeded at any time.

[12] Not to be exceeded more than 5 percent of the time within a 24-hour period.

[13] Applied as a daily average effluent limitation.

[14] Not to be exceeded more than once in any 30-day period.

[15] Applied as a 7-day median effluent limitation.

[16] The total monthly mass discharge of total mercury shall not exceed 0.016 lbs/month.

[17] Survival of aquatic organisms in 96-hour bioassays of undiluted waste shall be no less than:

Minimum for any one bioassay: 70%

Median for any three or more consecutive bioassays: 90%

2. Effluent limitations contained in Order No. R5-2006-0096 for discharges from Discharge Point No. 002 (Monitoring Location EFF-002 [EFF-001 in this Order]) and representative monitoring data from the term of Order No. R5-2006-0096 are as follows. Monitoring at Monitoring Location EFF-002 (EFF-001 in this Order) for compliance with effluent limitations at Discharge Point No. 002 is required by Order No. R5-2006-0096 until discharges to the treatment/disposal ponds located within the Feather River levees are discontinued.

Table F-3. Historic Effluent Limitations and Monitoring Data - Discharge Point No. 002

Parameter	Units	Effluent Limitation			Monitoring Data (From January 2007 To July 2011)		
		Average Monthly	Average Weekly	Maximum Daily	Highest Average Monthly Discharge	Highest Average Weekly Discharge	Highest Daily Discharge
Bis (2-ethylhexyl) Phthalate	µg/L	84[1]	--	190[1]	16[2]	--	16[2]
		1.8[3]	--	4.1[3]	12[4]	--	12[4]
	lbs/day[5]	1.3[1]	--	2.9[1]	NA	--	NA
	lbs/day[6]	0.075[3]	--	0.17[3]	0.92[4]	--	0.92[4]
Chromium (VI), Total Recoverable	µg/L	60[1]	--	120[1]	<4.0[2]	--	<4.0[2]
		8.1[3]	--	16[3]	<0.005[4]	--	<0.005[4]
	lbs/day[5]	0.91[1]	--	1.8[1]	NA	--	NA
	lbs/day[6]	0.34[3]	--	0.68[3]	<0.00005[4]	--	<0.00005[4]
Copper, Total Recoverable	µg/L	44[1]	--	84[1]	14[2]	--	14[2]
		2.4[3]	--	4.5[3]	8.3[4]	--	8.3[4]
	lbs/day[5]	0.67[1]	--	1.3[1]	NA	--	NA
	lbs/day[6]	0.10[3]	--	0.19[3]	0.084[4]	--	0.084[4]
Cyanide, Total Recoverable	µg/L	97[1]	--	200[1]	<2.0[2]	--	<2.0[2]
		4.3[3]	--	8.5[3]	<0.005[4]	--	<0.005[4]
	lbs/day[5]	1.5[1]	--	2.9[1]	NA	--	NA
	lbs/day[6]	0.18[3]	--	0.36[3]	<0.00005[4]	--	<0.00005[4]
Dibenzo(a,h)anthracene	µg/L	0.37[1]	--	0.73[1]	3.7[2]	--	3.7[2]
		0.0044[3]	--	0.0088[3]	<0.03[4]	--	<0.03[4]
	lbs/day[5]	0.0055[1]	--	0.011[1]	NA	--	NA
	lbs/day[6]	0.00018[3]	--	0.00037[3]	<0.0004[4]	--	<0.0004[4]
Dichlorobromomethane	µg/L	2.6	--	5.3	1.6	--	1.6
Lead, Total Recoverable	µg/L	6.8[1]	--	20[1]	0.76[2]	--	0.76[2]
		0.43[3]	--	1.2[3]	0.55[4]	--	0.55[4]
	lbs/day[5]	0.10[1]	--	0.30[1]	NA	--	NA
	lbs/day[6]	0.018[3]	--	0.052[3]	<0.0059[4]	--	<0.0059[4]
Tetrachloroethene	µg/L	21	--	56	<0.17	--	<0.17

Parameter	Units	Effluent Limitation			Monitoring Data (From January 2007 To July 2011)		
		Average Monthly	Average Weekly	Maximum Daily	Highest Average Monthly Discharge	Highest Average Weekly Discharge	Highest Daily Discharge
Zinc, Total Recoverable	µg/L	240[1]	--	490[1]	58[2]	--	58[2]
		21[3]	--	43[3]	39[4]	--	39[4]
	lbs/day[5]	3.6[1]	--	7.4[1]	NA	--	NA
	lbs/day[6]	0.88[3]	--	1.8[3]	<0.38[4]	--	<0.38[4]
Biochemical Oxygen Demand (5-day @ 20°C)	mg/L	45[7]	65[7]	--	56	67	--
		10[8]	15[8]	20[8]	NA	NA	NA
	lbs/day[5]	680[7]	980[7]	--	532	1,119	1,119
	lbs/day[6]	420[8]	630[8]	830[8]	NA	NA	NA
	% removal	65[7]	--	--	73[9]	--	--
		85[8]	--	--	NA	--	--
Total Suspended Solids	mg/L	45[7]	65[7]	--	37	92	--
		10[8]	15[8]	20[8]	NA	NA	NA
	lbs/day[5]	680[7]	980[7]	--	463	1,167	1,167
	lbs/day[6]	420[8]	630[8]	830[8]	NA	NA	NA
	% removal	65[7]	--	--	80[9]	--	--
		85[8]	--	--	NA	--	--
Settleable Solids	ml/l	0.1	--	0.2	<0.1	--	<0.1
pH	standard units	--	--	6.5 - 8.0	--	--	6.5 - 7.6
Aluminum	µg/L	74	--	140	190	--	190
Chloroform	µg/L	26	--	--	7.9	--	--
	lbs/day[5]	0.38[7]	--	--	0.17	--	--
	lbs/day[6]	1.1[8]	--	--	NA	NA	NA
Diazinon	µg/L	0.040	--	0.080	<0.009	--	<0.009
	lbs/day[5]	0.00060[7]	--	0.0012[8]	<0.00008	--	<0.00008
	lbs/day[6]	0.0017[8]	--	0.0033[8]	NA	--	NA
cis-1,2-Dichloroethene	µg/L	17	--	--	<0.2	--	<0.2

Parameter	Units	Effluent Limitation			Monitoring Data (From January 2007 To July 2011)		
		Average Monthly	Average Weekly	Maximum Daily	Highest Average Monthly Discharge	Highest Average Weekly Discharge	Highest Daily Discharge
Iron, Total Recoverable	µg/L	300	--	--	250	--	--
Manganese, Total Recoverable	µg/L	50	--	--	170	--	--
Methoxychlor	µg/L	--	--	0.03[10]	--	--	<0.0024
Methylene Blue Active Substances	mg/L	30	--	--	0.86	--	--
Nitrite (as N)	mg/L	60[7]	--	--	0.41	--	--
		1[8]	--	--	NA	--	--
	lbs/day[5]	900[7]	--	--	3.97	--	--
	lbs/day[6]	40[8]	--	--	NA	--	--
Nitrite + Nitrate (as N)	mg/L	60[7]	--	--	19.9	--	--
		10[8]	--	--	NA	--	--
	lbs/day[5]	900[7]	--	--	21.4	--	--
	lbs/day[6]	400[8]	--	--	NA	--	--
Oil and Grease	mg/L	10[8]	--	15[8]	NA		NA
	lbs/day[6]	420[8]	--	630[8]	NA	--	NA
Organochlorine Pesticides	µg/L	--	--	ND[11]	--	--	ND[12]
Thiobencarb	µg/L	2.6	--	--	<0.03	--	--
Electrical Conductivity @ 25°C	µmhos/cm	780[13]	--	--	834	--	--
Chlorine, Total Residual	mg/L	--	0.011[14]	0.019[15]	--	--	0.39[16]
	lbs/day[5]	--	0.17[7,14]	0.29[7,15]	--	--	NA
	lbs/day[6]	--	0.46[8,14]	0.79[8,15]	--	--	NA

Parameter	Units	Effluent Limitation			Monitoring Data (From January 2007 To July 2011)		
		Average Monthly	Average Weekly	Maximum Daily	Highest Average Monthly Discharge	Highest Average Weekly Discharge	Highest Daily Discharge
Total Ammonia (as N)	mg/L	1.22[17]	--	5.62[15,17]	24[19]	--	NA
		1.80[18]	--	5.62[15,18]	25[20]	--	NA
	lbs/day[5]	18.3[7,17]	--	84.4[7,15,17]	215[19]		NA
	lbs/day[6]	50.9[8,17]	--	234[8,15,17]	NA	--	NA
	lbs/day[5]	27.0[7,18]	--	84.4[7,15,18]	230[20]	--	NA
	lbs/day[6]	75.1[8,18]	--	234[8,15,18]	NA	--	NA
Turbidity	NTU	--	5[8,21]	10[8,22]/2[8,23]	NA	NA	NA
Total Coliform Organisms	MPN/100 mL	240[7,24]	--	500[7,22]	6.80	240	240
		23[8,25]	2.2[8,26]	240[8,22]	NA	NA	NA
Mercury	lbs/ month	0.016[27]	--	--	0.0087	--	--
Acute Toxicity	% survival	--	--	[28]	--	--	0[9]
Average dry weather discharge flow	MGD	--	--	1.8[7]	--	--	3.2
		--	--	5.0[8]	NA	NA	NA

Parameter	Units	Effluent Limitation			Monitoring Data (From January 2007 To July 2011)		
		Average Monthly	Average Weekly	Maximum Daily	Highest Average Monthly Discharge	Highest Average Weekly Discharge	Highest Daily Discharge

NA = Not Available

[1] Interim effluent limitation effective until the commencement of discharge from the proposed diffuser at EFF-001 or 18 May 2010, whichever is sooner.

[2] Represent monitoring data collected between 25 July 2007 and 17 May 2010.

[3] Final effluent limitation effective upon commencement of discharge from the proposed diffuser at EFF-001 or 18 May 2010, whichever is sooner.

[4] Represents monitoring data collected between 18 May 2010 and 15 June 2011.

[5] Based upon a design treatment capacity of 1.8 MGD.

[6] Based upon a design treatment capacity of 5.0 MGD

[7] Interim effluent limitation effective until the commencement of discharge from the proposed diffuser at EFF-001 or 21 September 2011, whichever is sooner.

[8] Final effluent limitation effective upon commencement of discharge from the proposed diffuser at EFF-001 or 21 September 2011, whichever is sooner.

[9] Represents the minimum value reported.

[10] Applied as an instantaneous maximum effluent limitation.

[11] The non-detectable (ND) limitation applies to each individual pesticide. No individual pesticide may be present in the discharge at detectable concentrations. The Discharger shall use EPA standard analytical techniques with the lowest possible detectable level for organochlorine pesticides with a maximum acceptable detection level of 0.05 µg/L.

[12] No individual organochlorine pesticides were detected in the effluent.

[13] The 30-day 90th percentile effluent electrical conductivity shall not exceed 780 µmhos/cm.

[14] Applied as a 4-day average effluent limitation.

[15] Applied as a 1-hour average effluent limitation.

[16] Represents the maximum observed 1-hour average chlorine concentration.

[17] Effective 1 April through 31 October.

[18] Effective 1 November through 31 March.

[19] Represents monitoring data collected 1 April through 31 October.

[20] Represent monitoring data collected 1 November through 31 March.

[21] Not to be exceeded more than 5 percent of the time within a 24-hour period.

[22] Not to be exceeded at any time.

[23] Applied as a daily average effluent limitation.

Parameter	Units	Effluent Limitation			Monitoring Data (From January 2007 To July 2011)		
		Average Monthly	Average Weekly	Maximum Daily	Highest Average Monthly Discharge	Highest Average Weekly Discharge	Highest Daily Discharge

[24] Applied as a 30-day median effluent limitation.

[25] Not to be exceeded more than once in any 30-day period.

[26] Applied as a 7-day median effluent limitation.

[27] The total monthly mass discharge of total mercury shall not exceed 0.016 lbs/month.

[28] Survival of aquatic organisms in 96-hour bioassays of undiluted waste shall be no less than:

Minimum for any one bioassay: 70%

Median for any three or more consecutive bioassays: 90%

D. Compliance Summary

1. The Central Valley Water Board issued Administrative Civil Liability (ACL) Complaint No. R5-2008-0610 on 19 November 2008 which proposed to assess an administrative civil liability of $33,000 against the Discharger for 11 effluent

limitations violations for 5-day biochemical oxygen demand (BOD_5), electrical conductivity, total coliform organisms, from 1 January 2000 to 30 April 2008. The Discharger paid the mandatory minimum penalty of $33,000.

2. The Central Valley Water Board issued ACL Complaint No. R5-2009-0515 on 16 March 2009 which proposed to assess an administrative civil liability of $18,000 against the Discharger for four effluent limitations violations for BOD_5, dibenzo(a,h)anthracene, and chlorine residual from 1 May 2008 to 31 December 2008. The Discharger paid the mandatory minimum penalty of $18,000.

3. The Central Valley Water Board issued ACL Complaint No. R5-2010-0536 on 13 September 2010 which proposed to assess an administrative civil liability of $33,000 against the Discharger for 11 effluent limitations violations for bis (2-ethylhexyl) phthalate, BOD_5, chlorine residual, copper, electrical conductivity, and zinc from 1 January 2009 to 30 June 2010. The Discharger paid the mandatory minimum penalty of $33,000.

4. The Central Valley Water Board issued ACL Complaint No. R5-2011-0535 on 14 March 2011 which proposed to assess an administrative civil liability in the amount of $15,000 against the Discharger for five effluent limitations violations for BOD_5, chlorine residual, and electrical conductivity from 1 July 2010 to 30 November 2010. The Discharger paid the mandatory minimum penalty of $15,000.

5. A compliance inspection of the Facility was conducted 25 March 2010. Major findings from the inspection include the following:

a. The Discharger did not report the monthly maximums, minimums, and averages for all continuously monitored constituents, including total residual chlorine, dechlorination, pH, and turbidity, in accordance with Monitoring and Reporting Program Provision X.A.3.

b. The Discharger reported a total of 26 effluent exceedances in 2009 and one chlorine exceedance in January 2010. There were also two groundwater monitoring well exceedances that were inadvertently not reported in October 2009 and January 2010.

c. The Discharger was not measuring influent flow, in accordance with section III.A.1 from Order No. R5-2006-0096.

6. A compliance inspection of the Facility was conducted on 25 March 2009. Major findings from the inspection include the following:

a. There was no record of submission of the 2008 annual operations report required by section X.D.2 of the Monitoring and Reporting Program.

b. Monthly Discharger Monitoring Reports (DMRs) were not signed by an authorized representative.

c. The Discharger reported a total of six effluent exceedances between September 2008 and December 2008.

d. The Discharger was not measuring influent flow in accordance with section III.A.1 from Order No. R5-2006-0096.

E. Planned Changes

As discussed in section II.A, the Discharger is currently constructing upgrades and expanding the Facility to provide tertiary treatment for an average dry weather flow of 5 MGD. The upgraded and expanded treatment system will consist of a new headworks facility including screens and pumps; primary treatment in two new rectangular primary clarifiers; new secondary biological treatment system using an air activated sludge treatment process to achieve nitrification and denitrification; two new circular secondary clarifiers; new tertiary treatment system with tertiary filters and chemical addition; and disinfection and dechlorination system using the facilities at the existing plant. The upgraded and expanded treatment system is scheduled to be

completed and fully operational by 31 December 2012. Upon completion of the upgrade and expansion project, the Discharger plans to begin discharging to the Feather River through the existing side bank outfall at Discharge Point No. 001. The Discharger anticipates that additional construction/improvements may be necessary for the existing outfall pipe, which may occur after completion of the upgrade and expansion project. In the meantime, the Discharger may discharge to either the Feather River or the percolation ponds at Discharge Point Nos. 001 or 002. Upon completion of any necessary construction/improvements to the outfall structure, the Discharger plans to discontinue discharges to the percolation ponds at Discharge Point No. 002, except for emergency conditions or upset (e.g., dechlorination failure) and when maintenance may degrade effluent quality.

The Discharger also proposed in the ROWD an increase in effluent flow from the Facility to accommodate an additional average dry weather flow of 1.7 MGD from the City of Marysville. The proposed regionalization project would include pumping screened raw wastewater from the City of Marysville's existing influent pump station approximately 3.4 miles through a force main to the primary influent structure of the Facility. Modifications to the City of Marysville WWTP include the addition of a flow equalization tank for temporarily holding peak wet weather flows and the addition of an odor and corrosion control chemical dosing system to inhibit the formation of sulfides in the force main.

III. APPLICABLE PLANS, POLICIES, AND REGULATIONS

The requirements contained in this Order are based on the applicable plans, policies, and regulations identified in the Findings in section II of this Order. The applicable plans, policies, and regulations relevant to the discharge include the following:

A. Legal Authorities

This Order is issued pursuant to regulations in the Clean Water Act (CWA) and the California Water Code (Water Code) as specified in the Finding contained at section II.C of this Order.

B. California Environmental Quality Act (CEQA)

This Order meets the requirements of CEQA as specified in the Finding contained at section II.E of this Order.

C. State and Federal Regulations, Policies, and Plans

1. **Water Quality Control Plans.** This Order implements the following water quality control plans as specified in the Finding contained at section II.H of this Order.

   a. *Water Quality Control Plan, Fourth Edition (Revised October 2011), for the Sacramento and San Joaquin River Basins* (Basin Plan)

2. **National Toxics Rule (NTR) and California Toxics Rule (CTR).** This Order implements the NTR and CTR as specified in the Finding contained at section II.I of this Order.

3. **State Implementation Policy (SIP).** This Order implements the SIP as specified in the Finding contained at section II.J of this Order.

4. **Alaska Rule.** This Order is consistent with the Alaska Rule as specified in the Finding contained at section II.L of this Order.

5. **Antidegradation Policy.** As specified in the Finding contained at section II.N of this Order and as discussed in detail in the Fact Sheet (Attachment F, section IV.D.4.), the discharge is consistent with the antidegradation provisions of 40 CFR 131.12 and State Water Resources Control Board (State Water Board) Resolution 68-16.

6. **Anti-Backsliding Requirements.** This Order is consistent with anti-backsliding policies as specified in the Finding contained at section II.O of this Order. Compliance with the anti-backsliding requirements is discussed in the Fact Sheet (Attachment F, Section IV.D.3).

7. **Emergency Planning and Community Right to Know Act**

Section 13263.6(a) of the Water Code, requires that "*the Regional Water Board shall prescribe effluent limitations as part of the waste discharge requirements of a POTW for all substances that the most recent toxic chemical release data reported to the state emergency response commission pursuant to Section 313 of the Emergency Planning and Community Right to Know Act of 1986 (42 U.S.C. Sec. 11023) (EPCRA) indicate as discharged into the POTW, for which the State Water Board or the Regional Water Board has established numeric water quality objectives, and has determined that the discharge is or may be discharged at a level which will cause, have the reasonable potential to cause, or contribute to, an excursion above any numeric water quality objective*".

The most recent toxic chemical data report does not indicate any reportable off-site releases or discharges to the collection system for this Facility. Therefore, a reasonable potential analysis based on information from EPCRA cannot be conducted. Based on information from EPCRA, there is no reasonable potential to cause or contribute to an excursion above any numeric water quality objectives included within the Basin Plan or in any State Water Board plan, so no effluent limitations are included in this permit pursuant to Water Code section 13263.6(a).

However, as detailed elsewhere in this Order, available effluent data indicate that there are constituents present in the effluent that have a reasonable potential to cause or contribute to exceedances of water quality standards and require inclusion of effluent limitations based on federal and state laws and regulations.

8. Storm Water Requirements

USEPA promulgated federal regulations for storm water on 16 November 1990 in 40 CFR Parts 122, 123, and 124. The NPDES Industrial Storm Water Program regulates storm water discharges from wastewater treatment facilities. Wastewater treatment plants are applicable industries under the storm water program and are obligated to comply with the federal regulations. The Discharger has submitted a

Notice of Intent for coverage under the State Water Board's Industrial Stormwater General Order. Therefore, this Order will not regulate storm water.

9. **Endangered Species Act.** This Order is consistent with the Endangered Species Act as specified in the Finding contained at section II.P of this Order.

D. Impaired Water Bodies on CWA 303(d) List

1. Under section 303(d) of the 1972 CWA, states, territories and authorized tribes are required to develop lists of water quality limited segments. The waters on these lists do not meet water quality standards, even after point sources of pollution have installed the minimum required levels of pollution control technology. On 12 November 2010, USEPA gave partial approval to California's 2010 section 303(d) List of Water Quality Limited Segments. The Basin Plan references this list of Water Quality Limited Segments (WQLSs), which are defined as "*…those sections of lakes, streams, rivers or other fresh water bodies where water quality does not meet (or is not expected to meet) water quality standards even after the application of appropriate limitations for point sources* (40 CFR Part 130, et seq.)." The Basin Plan also states, "*Additional treatment beyond minimum federal standards will be imposed on dischargers to [WQLSs]. Dischargers will be assigned or allocated a maximum allowable load of critical pollutants so that water quality objectives can be met in the segment*." The Lower Feather River is listed on the 303(d) list as impaired for chlorpyrifos, Group A pesticides, mercury, polychlorinated biphenyls (PCBs), and unknown toxicity.

2. **Total Maximum Daily Loads (TMDLs).** USEPA requires the Central Valley Water Board to develop TMDLs for each 303(d) listed pollutant and water body combination. The Central Valley Water Board adopted a TMDL for diazinon in the Sacramento and Feather Rivers and amended the Basin Plan to include diazinon waste load allocations and water quality objectives in October 2003. The Basin Plan was again revised on 3 May 2007 by Resolution No. R5-2007-0034, which revised the water quality objectives for diazinon to be less stringent and added water quality objectives and waste load allocations for chlorpyrifos. The Basin Plan

includes waste load allocations for diazinon and chlorpyrifos applicable to all NPDES dischargers that discharge directly or indirectly to the Feather River. Therefore, this Order includes effluent limitations for these constituents to implement the waste load allocations.

3. The 303(d) listings and TMDLs have been considered in the development of the Order. A pollutant-by-pollutant evaluation of each pollutant of concern is described in section VI.C.3 of this Fact Sheet.

E. Other Plans, Polices and Regulations

1. **Title 27, California Code of Regulations (CCR), section 20005 et seq. (hereafter Title 27).** Some discharges of wastewater to land are exempt from the requirements of Title 27, CCR, based on section 20090 et seq. Title 27 CCR section 20090(b) contains an exemption for discharges of wastewater to land where the discharge is covered by WDRs, the discharge is in compliance with the Basin Plan, and the discharge does not need to be managed as a hazardous waste. This Order serves as WDRs for the discharges and the discharges do not need to be managed as hazardous waste. The remainder of this section discusses the evaluation performed to determine if the discharges are in compliance with the Basin Plan.

   The Discharger currently discharges up to 1.8 MGD of treated wastewater to a series of seven unlined percolation ponds within the Feather River floodplain. Upon completion of the upgrades and expansion project, the Discharger will only discharge tertiary treated wastewater to the ponds. Upon completion of any necessary improvements to the existing side bank outfall, the Discharger plans to discontinue continuous discharges to the ponds and discharges to Ponds 1 and 2, but will maintain Ponds 3, 4, 5, 6, and 7 to use in emergency situations. Wastewater diverted to the ponds in emergency situations will not be routed back to the wastewater treatment system, but will be left in the ponds to evaporate/percolate.

In order to qualify for an exemption from Title 27 under section 20090(b), the Discharger must demonstrate compliance with the Basin Plan, which requires that constituent concentrations in the groundwater do not exceed either the Basin Plan's groundwater water quality objectives or background groundwater concentrations, whichever is greater. The Discharger has a groundwater monitoring network that consists of three monitoring wells (MW-1 through MW-3). According to the Discharger's 4 May 2011 *Linda County Water District Wastewater Treatment Plant Hydrogeologic Assessment Report* (Kennedy/Jenks Consultants), monitoring well MW-1 is up gradient of the ponds and monitoring wells MW-2 and MW-3 are down gradient of the ponds, as shown in Attachment C-3.

During the period from January 2007 and February 2011, the Discharger sampled the three groundwater wells for several constituents, including pH, nutrients (total nitrogen, nitrates, total kjeldahl nitrogen, and phosphorus), salinity (chloride, electrical conductivity, and total dissolved solids), standard minerals, and metals. Two methods were used to examine compliance with the Basin Plan; first, data was analyzed to determine whether reported constituent concentrations exceeded applicable Basin Plan objectives. Second, for those constituents that were found to exceed applicable objectives, further analysis was performed to determine if the discharges from the ponds were responsible for increases in groundwater constituent concentrations.

Based on the evaluation of constituent concentrations, iron, manganese, and total coliform organisms indicated concentrations above applicable water quality objectives at the down gradient well locations. However, the constituent concentrations were also greater than the applicable water quality objectives in the up gradient monitoring well. Table F-4 provides a summary of groundwater monitoring results between January 2007 and February 2011.

Table F-4. Groundwater Monitoring Data

Parameter	Applicable Objective	Up Gradient of Ponds (Well MW-1)	Down Gradient of Ponds (Well MW-2)	Down Gradient of Ponds (Well MW-3)

		Mean	Mean	Mean
Electrical Conductivity @ 25°C (µmhos/cm)	700	524	634	670
Iron, Total Recoverable	300	314	363	919
Manganese, Total Recoverable	50	1,541	2,490	756
Nitrate Nitrogen, Total (as N) (mg/L)	10	1.1	3.7	7.5
Total Dissolved Solids (mg/L)	450	314	416	443
Total Coliform Organisms (MPN/100 mL)	2.2	5.4	7.43	4.93

Based on the analysis, total coliform organisms consistently exceeded applicable water quality objectives in the up gradient and down gradient wells. Average concentrations in down gradient well MW-2 were greater than the average up gradient concentrations in MW-1, while average concentrations in down gradient well MW-3 were less than the average up gradient concentrations in MW-1. Monitoring data within the ponds is not available. Effluent monitoring data indicates that the average effluent total coliform organisms concentration is 8.34 MPN/100 mL. The existing Facility consists of equivalent to secondary treatment and chlorine disinfection designed to achieve compliance with a 30-day median of 240 MPN/100 mL; however, the Discharger is currently constructing upgrades to the Facility to provide tertiary treatment designed to achieve compliance with a 7-day median of 2.2 MPN/100 mL. Upon completion of the upgrades and any necessary improvements to the existing side bank outfall, discharges to the ponds will occur only during emergency situations and will be of significantly less volume than the current, continuous discharges to the ponds. Therefore, the Central Valley Water Board concludes that the ponds will not contribute to increased total coliform organism concentrations in the underlying groundwater and are in compliance with the Basin Plan with respect to total coliform organisms.

Although average up gradient and down gradient concentrations for iron exceeded the applicable MCL of 300 µg/L, down gradient concentrations were below the applicable MCL of 300 µg/L with the exception of one sample in MW-2 (2,270 µg/L) and one sample in MW-3 (6,200 µg/L), and were generally lower than the corresponding up gradient concentrations for samples taken on the same day. For manganese, average concentrations in the up gradient and down gradient wells

were above the applicable MCL of 50 µg/L. The average down gradient manganese concentration in MW-2 was greater than the average up gradient concentration, while the average down gradient concentration in MW-3 was less than the average up gradient concentration. The MEC for manganese in discharges to the percolation ponds was 170 µg/L, with a maximum observed annual average of 75 µg/L. In general, manganese concentrations in MW-1 and MW-2 were greater than the MEC, and concentrations in MW-3 were less than the MEC. As discussed above, the Discharger is currently constructing upgrades to the Facility to provide tertiary treatment and, upon completion of the upgrades and any necessary improvements to the existing side bank outfall, discharges to the ponds will occur only during emergency situations and will be of significantly less volume than the current, continuous discharges to the ponds. Therefore, the Central Valley Water Board concludes that the ponds will not contribute to increased iron and manganese concentrations in the underlying groundwater and are in compliance with the Basin Plan with respect to iron and manganese.

Considering all data, the Central Valley Water Board finds that the discharges from the percolation ponds to groundwater are in compliance with the Basin Plan. Therefore, the discharges meet the pre-conditions for an exemption to the requirements of Title 27 pursuant to Title 27 CCR section 20090(b). This Order requires the Discharger to continue groundwater monitoring to evaluate impacts to groundwater and assure protection of beneficial uses.

IV. RATIONALE FOR EFFLUENT LIMITATIONS AND DISCHARGE SPECIFICATIONS

Effluent limitations and toxic and pretreatment effluent standards established pursuant to sections 301 (Effluent Limitations), 302 (Water Quality Related Effluent Limitations), 304 (Information and Guidelines), and 307 (Toxic and Pretreatment Effluent Standards) of the CWA and amendments thereto are applicable to the discharge.

The CWA mandates the implementation of effluent limitations that are as stringent as necessary to meet water quality standards established pursuant to state or federal law [33 U.S.C., §1311(b)(1)(C); 40 CFR 122.44(d)(1)]. NPDES permits must incorporate discharge

limits necessary to ensure that water quality standards are met. This requirement applies to narrative criteria as well as to criteria specifying maximum amounts of particular pollutants. Pursuant to federal regulations, 40 CFR 122.44(d)(1)(i), NPDES permits must contain limits that control all pollutants that "*are or may be discharged at a level which will cause, have the reasonable potential to cause, or contribute to an excursion above any state water quality standard, including state narrative criteria for water quality*." Federal regulations, 40 CFR 122.44(d)(1)(vi), further provide that "[w]*here a state has not established a water quality criterion for a specific chemical pollutant that is present in an effluent at a concentration that causes, has the reasonable potential to cause, or contributes to an excursion above a narrative criterion within an applicable State water quality standard, the permitting authority must establish effluent limits*."

The CWA requires point source dischargers to control the amount of conventional, non-conventional, and toxic pollutants that are discharged into the waters of the United States. The control of pollutants discharged is established through effluent limitations and other requirements in NPDES permits. There are two principal bases for effluent limitations in the Code of Federal Regulations: 40 CFR 122.44(a) requires that permits include applicable technology-based limitations and standards; and 40 CFR 122.44(d) requires that permits include water quality based effluent limitations (WQBELs) to attain and maintain applicable numeric and narrative water quality criteria to protect the beneficial uses of the receiving water where numeric water quality objectives have not been established. The Basin Plan at page IV-17.00, contains an implementation policy, "*Policy for Application of Water Quality Objectives*" that specifies that the Central Valley Water Board "*will, on a case-by-case basis, adopt numerical limitations in orders which will implement the narrative objectives*." This Policy complies with 40 CFR 122.44(d)(1). With respect to narrative objectives, the Central Valley Water Board must establish effluent limitations using one or more of three specified sources, including: (1) USEPA's published water quality criteria, (2) a proposed state criterion (i.e., water quality objective) or an explicit state policy interpreting its narrative water quality criteria (i.e., the Central Valley Water Board's "*Policy for Application of Water Quality Objectives*") (40 CFR 122.44(d)(1)(vi)(A), (B) or (C)), or (3) an indicator parameter.

The Basin Plan includes numeric site-specific water quality objectives and narrative objectives for toxicity, chemical constituents, discoloration, radionuclides, and tastes and odors. The narrative toxicity objective states: "*All waters shall be maintained free of toxic substances in concentrations that produce detrimental physiological responses in human, plant, animal, or aquatic life*." (Basin Plan at III-8.00) The Basin Plan states that material and relevant information, including numeric criteria, and recommendations from other agencies and scientific literature will be utilized in evaluating compliance with the narrative toxicity objective. The narrative chemical constituents objective states that waters shall not contain chemical constituents in concentrations that adversely affect beneficial uses. At minimum, "…*water designated for use as domestic or municipal supply (MUN) shall not contain concentrations of chemical constituents in excess of the maximum contaminant levels (MCLs)" in Title 22 of CCR.* The Basin Plan further states that, to protect all beneficial uses, the Central Valley Water Board may apply limits more stringent than MCLs. The narrative tastes and odors objective states: *"Water shall not contain taste- or odor-producing substances in concentrations that impart undesirable tastes or odors to domestic or municipal water supplies or to fish flesh or other edible products of aquatic origin, or that cause nuisance, or otherwise adversely affect beneficial uses*."

A. Discharge Prohibitions

1. **Prohibition III.A (Discharge of wastewater at a location or in a manner different from that described in the Findings is prohibited).** This prohibition is based on Water Code Section 13260 that requires filing of a ROWD before discharges can occur. The Discharger submitted a ROWD for the discharges described in this Order; therefore, discharges not described in this Order are prohibited. This prohibition is retained from Order No. R5-2006-0096.

2. **Prohibition III.B (The by-pass or overflow of wastes to surface waters is prohibited, except as allowed by Federal Standard Provisions I.G. and I.H. (Attachment D)).** As stated in section I.G of Attachment D, Standard Provisions, this Order prohibits bypass from any portion of the treatment facility. Federal regulations, 40 CFR 122.41(m), define "bypass" as the intentional diversion of waste streams

from any portion of a treatment facility. This section of the federal regulations, 40 CFR 122.41(m)(4), prohibits bypass unless it is unavoidable to prevent loss of life, personal injury, or severe property damage. In considering the Central Valley Water Board's prohibition of bypasses, the State Water Board adopted a precedential decision, Order No. WQO 2002-0015, which cites the federal regulations, 40 CFR 122.41(m), as allowing bypass only for essential maintenance to assure efficient operation. This prohibition is retained from Order No. R5-2006-0096.

3. **Prohibition III.C (Neither the discharge nor its treatment shall create a nuisance as defined in section 13050 of the Water Code).** This prohibition is based on Water Code Section 13050 that requires water quality objectives established for the prevention of nuisance within a specific area. The Basin Plan prohibits conditions that create a nuisance. This prohibition is retained from Order No. R5-2006-0096.

4. **Prohibition III.D (The Discharger shall not allow pollutant-free wastewater to be discharged into the treatment or disposal system in amounts that significantly diminish the system's capability to comply with this Order. Pollutant-free wastewater means rainfall and groundwater that are essentially free of pollutants).** This prohibition is based on 40 CFR Part 122.41 et seq. that requires the proper design and operation of treatment facilities. This prohibition is retained from Order No. R5-2006-0096.

B. Technology-Based Effluent Limitations

1. Scope and Authority

Section 301(b) of the CWA and implementing USEPA permit regulations at 40 CFR 122.44 require that permits include conditions meeting applicable technology-based requirements at a minimum, and any more stringent effluent limitations necessary to meet applicable water quality standards. The discharge authorized by this Order must meet minimum federal technology-based requirements based on Secondary Treatment Standards at 40 CFR Part 133.

Regulations promulgated in 40 CFR 125.3(a)(1) require technology-based effluent limitations for municipal Dischargers to be placed in NPDES permits based on Secondary Treatment Standards or Equivalent to Secondary Treatment Standards.

The Federal Water Pollution Control Act Amendments of 1972 (PL 92-500) established the minimum performance requirements for POTWs [defined in section 304(d)(1)]. Section 301(b)(1)(B) of that Act requires that such treatment works must, as a minimum, meet effluent limitations based on secondary treatment as defined by the USEPA Administrator.

Based on this statutory requirement, USEPA developed secondary treatment regulations, which are specified in 40 CFR Part 133. These technology-based regulations apply to all municipal wastewater treatment plants and identify the minimum level of effluent quality attainable by secondary treatment in terms of 5-day biochemical oxygen demand (BOD_5), total suspended solids (TSS), and pH.

2. Applicable Technology-Based Effluent Limitations

a. BOD_5 and TSS. Federal regulations, 40 CFR Part 133, establish the minimum weekly and monthly average level of effluent quality attainable by secondary treatment for BOD_5 and TSS. This Order establishes WQBELs that are more stringent than the secondary technology-based treatment described in 40 CFR Part 133 and are necessary to protect the beneficial uses of the receiving stream. (See section IV.C.3.c.xii of this Fact Sheet for the discussion on Pathogens which includes WQBELs for BOD_5 and TSS.) In addition, 40 CFR 133.102, in describing the minimum level of effluent quality attainable by secondary treatment, states that the 30-day average percent removal shall not be less than 85 percent. This Order contains a limitation requiring an average of 85 percent removal of BOD_5 and TSS over each calendar month.

b. Flow. The existing Facility was designed to provide a secondary level of treatment for up to a design flow of 1.8 MGD. Upon completion of the upgrade and expansion project, the Facility will provide a tertiary level of treatment for

up to a flow of 5.0 MGD. Upon completion of the regionalization project with the City of Marysville, the Facility will provide a tertiary level of treatment for up to a flow of 6.7 MGD. The percolation ponds have a capacity of 53 million gallons (assuming 2 foot freeboard); however, the Discharger has not demonstrated that the percolation ponds have the capacity to receive flows greater than 1.8 MGD. Therefore, this Order contains an average dry weather flow effluent limit of 1.8 MGD applicable to discharges to the ponds at Discharge Point No. 002. Once the upgrade and expansion project is complete, the combined effluent flow from the Facility at Discharge Point Nos. 001 and 002 shall not exceed 5.0 MGD. Once the regionalization project with the City of Marysville is complete, the combined effluent flow from the Facility at Discharge Point Nos. 001 and 002 shall not exceed 6.7 MGD.

c. **pH.** The secondary treatment regulations at 40 CFR Part 133 also require that pH be maintained between 6.0 and 9.0 standard units.

Summary of Technology-based Effluent Limitations
Discharge Point Nos. 001 and 002

Table F-5. Summary of Technology-based Effluent Limitations

Parameter	Units	Effluent Limitations				
		Average Monthly	Average Weekly	Maximum Daily	Instantaneous Minimum	Instantaneous Maximum
Flow	MGD	--	--	1.8[1]	--	--
		--	--	5.0[2]	--	--
		--	--	6.7[3]	--	--
Biochemical Oxygen Demand (5-day @ 20°C)	mg/L	30	45	--	--	--
	lbs/day[1]	450	676	--	--	--
	lbs/day[2]	1,251	1,877	--	--	--
	lbs/day[3]	1,676	2,515	--	--	--
	% Removal	85	--	--	--	--
pH	standard units	--	--	--	6.0	9.0

Parameter	Units	Effluent Limitations				
		Average Monthly	Average Weekly	Maximum Daily	Instantaneous Minimum	Instantaneous Maximum
Total Suspended Solids	mg/L	30	45	--	--	--
	lbs/day[1]	450	676	--	--	--
	lbs/day[2]	1,251	1,877	--	--	--
	lbs/day[3]	1,676	2,515	--	--	--
	% Removal	85	--	--	--	--

1 Applicable only at Discharge Point No. 002. Based upon a design average dry weather flow of 1.8 MGD.

2 Applicable to the combined flow at Discharge Point Nos. 001 and 002 upon completion of the upgrade and expansion project. Based upon a design average dry weather flow of 5.0 MGD.

3 Applicable to the combined flow at Discharge Point Nos. 001 and 002 upon completion of the regionalization project with the City of Marysville. Based upon a design average dry weather flow of 6.7 MGD.

C. Water Quality-Based Effluent Limitations (WQBELs)

1. Scope and Authority

Section 301(b) of the CWA and 40 CFR 122.44(d) require that permits include limitations more stringent than applicable federal technology-based requirements where necessary to achieve applicable water quality standards. This Order contains requirements, expressed as a technology equivalence requirement, more stringent than secondary treatment requirements that are necessary to meet applicable water quality standards. The rationale for these requirements, which consist of tertiary treatment, is discussed in section IV.C.3.c.xii of this Fact Sheet.

40 CFR 122.44(d)(1)(i) mandates that permits include effluent limitations for all pollutants that are or may be discharged at levels that have the reasonable potential to cause or contribute to an exceedance of a water quality standard, including numeric and narrative objectives within a standard. Where reasonable potential has been established for a pollutant, but there is no numeric criterion or objective for the pollutant, WQBELs must be established using: (1) USEPA criteria guidance under CWA section 304(a), supplemented where necessary by other

relevant information; (2) an indicator parameter for the pollutant of concern; or (3) a calculated numeric water quality criterion, such as a proposed state criterion or policy interpreting the state's narrative criterion, supplemented with other relevant information, as provided in 40 CFR 122.44(d)(1)(vi).

The process for determining reasonable potential and calculating WQBELs when necessary is intended to protect the designated uses of the receiving water as specified in the Basin Plan, and achieve applicable water quality objectives and criteria that are contained in other state plans and policies, or any applicable water quality criteria contained in the CTR and NTR.

2. Applicable Beneficial Uses and Water Quality Criteria and Objectives

The Basin Plan designates beneficial uses, establishes water quality objectives, and contains implementation programs and policies to achieve those objectives for all waters addressed through the plan. In addition, the Basin Plan implements State Water Board Resolution No. 88-63, which established state policy that all waters, with certain exceptions, should be considered suitable or potentially suitable for municipal or domestic supply.

The Basin Plan on page II-1.00 states: "*Protection and enhancement of existing and potential beneficial uses are primary goals of water quality planning…*" and with respect to disposal of wastewaters states that "*...disposal of wastewaters is [not] a prohibited use of waters of the State; it is merely a use which cannot be satisfied to the detriment of beneficial uses.*"

The federal CWA section 101(a)(2), states: "*it is the national goal that wherever attainable, an interim goal of water quality which provides for the protection and propagation of fish, shellfish, and wildlife, and for recreation in and on the water be achieved by July 1, 1983.*" Federal Regulations, developed to implement the requirements of the CWA, create a rebuttable presumption that all waters be designated as fishable and swimmable. Federal Regulations, 40 CFR sections 131.2 and 131.10, require that all waters of the State regulated to protect the beneficial

uses of public water supply, protection and propagation of fish, shell fish and wildlife, recreation in and on the water, agricultural, industrial and other purposes including navigation. Section 131.3(e), 40 CFR, defines existing beneficial uses as those uses actually attained after 28 November 1975, whether or not they are included in the water quality standards. Federal Regulation, 40 CFR section 131.10 requires that uses be obtained by implementing effluent limitations, requires that all downstream uses be protected and states that in no case shall a state adopt waste transport or waste assimilation as a beneficial use for any waters of the United States.

a. **Receiving Water and Beneficial Uses.** The Facility discharges treated wastewater into the Feather River from the Fish Barrier Dam to the Sacramento River. Beneficial uses applicable to the Feather River are as follows:

Table F-6. Basin Plan Beneficial Uses

Discharge Point	Receiving Water Name	Beneficial Use(s)
001 and 002	Feather River	Existing: Municipal and domestic supply (MUN); Agricultural supply, including irrigation (AGR); Water contact recreation, including canoeing and rafting (REC-1); Non-contact water recreation (REC-2); Warm freshwater habitat (WARM); Cold freshwater habitat (COLD); Migration of aquatic organisms, warm and cold (MIGR); Spawning, reproduction, and/or early development, warm and cold (SPWN); and Wildlife habitat (WILD).
002	Groundwater	Existing: Municipal and domestic supply (MUN); Agricultural supply, including irrigation and stock watering (AGR); Industrial process supply (PROC); and Industrial service supply (IND).

b. **Effluent and Ambient Background Data.** The reasonable potential analysis (RPA), as described in section IV.C.3 of this Fact Sheet, was based on data from May 2008 through April 2011, which includes effluent and ambient background data submitted in SMRs.

c. **Assimilative Capacity/Mixing Zone.** The Discharger requested in the ROWD a dilution credit of 347:1 for human health constituents based on the Feather River harmonic mean flow of 3,600 cfs (2,327 MGD) and a discharge flow of 6.7 MGD. The constituents with effluent limitations in this Order based on human health criteria include bis (2-ethylhexyl) phthalate, carbon tetrachloride, dichlorobromomethane, manganese, and methylene blue active substances.

The CWA directs states to adopt water quality standards to protect the quality of its waters. USEPA's current water quality standards regulation authorizes states to adopt general policies, such as mixing zones, to implement state water quality standards (40 CFR 122.44 and 122.45). The USEPA allows states to have broad flexibility in designing its mixing zone policies. Primary policy and guidance on determining mixing zone and dilution credits is provided by the SIP and the Basin Plan. If no procedure applies in the SIP or the Basin Plan, then the Central Valley Water Board may use the USEPA *Technical Support Document for Water Quality-Based Toxics Control* (EPA/505/2-90-001)(TSD).

The allowance of mixing zones by the Central Valley Water Board is discussed in the Basin Plan, *Policy for Application of Water Quality Objectives*, which states in part, "*In conjunction with the issuance of NPDES and storm water permits, the Regional Board may designate mixing zones within which water quality objectives will not apply provided the discharger has demonstrated to the satisfaction of the Regional Board that the mixing zone will not adversely impact beneficial uses. If allowed, different mixing zones may be designated for different types of objectives, including, but not limited to, acute aquatic life objectives, chronic aquatic life objectives, human health objectives, and acute and chronic whole effluent toxicity objectives, depending in part on the averaging period over*

which the objectives apply. In determining the size of such mixing zones, the Regional Board will consider the applicable procedures and guidelines in the EPA's Water Quality Standards Handbook and the [TSD]. Pursuant to EPA guidelines, mixing zones designated for acute aquatic life objectives will generally be limited to a small zone of initial dilution in the immediate vicinity of the discharge."

Section 1.4.2 of the SIP states, in part, "…*with the exception of effluent limitations derived from TMDLs, in establishing and determining compliance with effluent limitations for applicable human health, acute aquatic life, or chronic aquatic life priority pollutant criteria/objectives or the toxicity objective for aquatic life protection in a basin plan, the Regional Board may grant mixing zones and dilution credits to dischargers…The applicable priority pollutant criteria and objectives are to be met through a water body except within any mixing zone granted by the Regional Board. The allowance of mixing zones is discretionary and shall be determined on a discharge-by-discharge basis. The Regional Board may consider allowing mixing zones and dilution credits only for discharges with a physically identifiable point of discharge that is regulated through an NPDES permit issued by the Regional Board.*"

For incompletely-mixed discharges, the Discharger must complete an independent mixing zone study to demonstrate to the Central Valley Water Board that a dilution credit is appropriate. In granting a mixing zone, the SIP states that a mixing zone shall be as small as practicable, and meet the conditions provided in Section 1.4.2.2 as follows:

"*A mixing zone shall be as small as practicable. The following conditions must be met in allowing a mixing zone:*

A: A mixing zone shall not:

1. *compromise the integrity of the entire water body;*

2. cause acutely toxic conditions to aquatic life passing through the mixing zone;

3. restrict the passage of aquatic life;

4. adversely impact biologically sensitive or critical habitats, including, but not limited to, habitat of species listed under federal or State endangered species laws;

5. produce undesirable or nuisance aquatic life;

6. result in floating debris, oil, or scum;

7. produce objectionable color, odor, taste, or turbidity;

8. cause objectionable bottom deposits;

9. cause nuisance;

10. dominate the receiving water body or overlap a mixing zone from different outfalls; or

11. be allowed at or near any drinking water intake. A mixing zone is not a source of drinking water. To the extent of any conflict between this determination and the Sources of Drinking Water Policy (Resolution No. 88-63), this SIP supersedes the provisions of that policy."

Order No. R5-2006-0096 allowed a dilution credit of 1,928 for the calculation of effluent limitations based on human health-based criteria. This dilution credit was based on the Discharger's plans to install a diffuser in the Feather River and that complete mixing would occur within two stream widths, or 600 feet downstream of the diffuser. However, the Discharger conducted a diffuser engineering feasibility study and submitted a 9 August 2007 memorandum *Initial Discussion of Outfall Construction Issues and Options* (Kennedy/Jenks Consultants) that concluded that construction of a diffuser at the location of the existing outfall is infeasible.

Upon completion of the upgrade and expansion project, this Order allows the Facility to discharge tertiary treated effluent directly to the Feather River via the existing side bank outfall at latitude 39°05'42"N and longitude 121°35'20"W, approximately 3,700 feet upstream of Shanghai Falls and 2.5 miles downstream

of the Feather and Yuba rivers confluence. Flow in the Feather River at the point of discharge from the Facility is affected by upstream flow in the Feather River, as well as flow in the Yuba River.

The Feather River and Yuba River are operated to maintain minimum flow rates regardless of flow diversions. The flow in the Feather River is operated in accordance with a 26 August 1983 agreement between the DWR and DFG entitled *Concerning the Operation of the Oroville Division of the State Water Project for Management of Fish and Wildlife*. This agreement states that a minimum flow of 1,000 cubic feet per second (cfs) must be maintained by releases from the Oroville Reservoir (Thermalito Diversion Dam) along all stretches of the Feather River from the Thermalito Afterbay to the mouth of the Feather River at Verona. Releases from the reservoir are limited to prevent water elevations in the reservoir to fall below 733 feet. When releases are limited, the Feather River flow could be as low as 750 cfs. The flow in the Yuba River is controlled under the 1 March 2001 State Water Board Decision 1644, which requires flows in the Yuba River to be maintained at 250 cfs, except under hydrologic critical years, where the flow at Marysville will be 100 cfs.

A field investigation, using electrical conductivity (EC) as the water constituent tracer, was conducted within the reach of the Feather and Yuba rivers confluence down to just below Shanghai Falls (18 March 2003 *Yuba City WRP Complete Mix Investigation,* Larry Walker Associates). Samples obtained from both Feather River and Yuba River upstream of the rivers' confluence revealed a 13% difference in EC measurements. EC transects were mapped along reaches of the Feather River approximately halfway and three-quarters way downstream of the rivers confluence, and just below the falls. The field investigation demonstrates that water from the Yuba River remains on the east bank of the Feather River while water from the Feather River remains on the west bank of the Feather River downstream of their confluence, and complete mixing occurs at Shanghai Falls. (see Attachment C-4 of this Order) The side-

bank effluent discharge is located on the east bank of the Feather River, and therefore, the mixing zone is expected to remain on the east bank as demonstrated through the field investigation.

The Central Valley Water Board adopted Order R5-2007-0134 that permits the City of Yuba City WWTP to discharge to the Feather River through a diffuser. The diffuser is located at a distance ranging from 160 feet to 320 feet upstream of Shanghai Falls, and approximately 3,400 feet downstream of the Discharger's side-bank effluent discharge. The diffuser was situated 200 feet from the West bank of the Feather River, where the river is 588 feet wide. As demonstrated in the field investigation previously discussed, the City of Yuba City is expected to remain on the west bank until complete mixing occurs approximately 250 feet downstream at Shanghai Falls. However, the City of Yuba City WWTP is no longer discharging through the diffuser, because the natural dynamics of the Feather River has shifted rendering the diffuser inoperable. The City of Yuba City is currently discharging to ponds; the City of Yuba City will submit a discharge proposal in their next Report of Waste Discharge for the renewal of its existing permit.

The Discharger requested a 3,700 foot mixing zone that extends from the side-bank discharge to the point of complete mixing, the end of the mixing zone, and a dilution credit of 347:1 for human-health constituents. However, Central Valley Water Board did not grant the full extent of the requested mixing zone, based on a constituent-by-constituent analysis. Allowing dilution results in a higher concentration of the subject constituents, results in a greater amount of constituent loading to the receiving water. As required by Section 4.1.2.2 of the SIP, the mixing zone must be as small as practical. Additionally, the degradation to the receiving water downstream of the mixing zone, due to the less stringent effluent limits and increased loading, must be in accordance with State and federal antidegradation policies, minimizing the use of available assimilative capacity to that needed after best practical treatment or control (BPTC) is implemented. Therefore, in lieu of allowing the full dilution credit of

347:1, this Order establishes performance-based effluent limitations with which the Discharger is able to comply, as shown in the following table (also discussed further in section IV.C.3.c).

Table F-7. Dilution Credits Associated with Performance-based Effluent Limitations

Pollutant	Units	ECA[1]	Criterion	Background	Dilution Credit[2]
Bis (2-ethylhexyl) Phthalate	µg/L	18	1.8	<0.95	19
Carbon Tetrachloride	µg/L	7.5	0.25	<0.15	73
Dichlorobromomethane	µg/L	22	0.56	<0.16	55
Manganese, Total Recoverable	µg/L	75	50	31[3]	1.3
Methylene Blue Active Substances	µg/L	30,000	500	<100	74

1 Equivalent to the performance-based AMEL or annual average effluent limitation.

2 The dilution credit is calculated using the steady-state mass balance equation rearranged to solve for the dilution credit, as follows:

$$D = (ECA - C) / (C - B)$$

3 Based on monitoring data from January through December 2002.

To fully comply with all applicable laws, regulations and policies of the State, Central Valley Water Board approved a mixing zone and the associated dilution credits shown in Table F-7 based on the following:

- Mixing zones are allowed under the SIP provided all elements contain in Section 1.4.2.2 are met. Based on the mixing zone study conducted by the Discharger the Central Valley Water Board has determined that these factors are met.

- Section 1.4.2.2.of the SIP requires mixing zones to be as small as practicable. Based on the mixing zone study conducted by the Discharger the Central Valley Water Board has determined the mixing zone is as small as practicable.

- In accordance with Section 1.4.2.2 of the SIP, the Board has determined the mixing zone is as small as practicable (the dilution credits have been reduced from 347 to a maximum of 74, which is an overall reduction in

dilution credits of 79%), will not compromise the integrity of the entire water body, restrict the passage of aquatic life, dominate the water body or overlap existing mixing zones from different outfalls. The mixing zone is small (approximately 3,700 feet or less downstream of the discharge) relative to the large size of the receiving water (approximately 71 miles), is not at or near a drinking water intake, and does not overlap a mixing zone from a different outfall. The field investigation (see Attachment C-4 of this Order) shows that the City of Yuba City's mixing zone and the Discharger's mixing zone are not expected to overlap. However, the Discharger will conduct another mixing zone study to verify the extent of the mixing zone after commencement of discharges to Feather River.

- The Central Valley Water Board is allowing a mixing zone for human health constituents only and has determined allowing such mixing zone will not cause acutely toxic conditions to aquatic life passing through the mixing zone.

- The Central Valley Water Board has determined the discharge will not adversely impact biologically sensitive or critical habitats, including, but not limited to, habitat of species listed under the federal or State endangered species laws, because the mixing zone is for human health criteria only, is relatively small, and acutely toxic conditions will not occur in the mixing zone. The discharge will not produce undesirable or nuisance aquatic life, result in floating debris, oil, or scum, produce objectionable odor, taste, or turbidity, cause objectionable bottom deposits, or cause nuisance, because the proposed Order establishes end-of-pipe effluent limitations (e.g., for BOD_5 and TSS) and discharge prohibitions to prevent these conditions from occurring.

- As required by the SIP, in determining the extent of or whether to allow a mixing zone and dilution credit, the Central Valley Water Board has considered the presence of pollutants in the discharge that are carcinogenic, mutagenic, teratogenic, persistent, bioaccumulative, or attractive to aquatic

organisms, and concluded that the allowance of the mixing zone and dilution credit is adequately protective of the beneficial uses of the receiving water.

- The Central Valley Water Board has determined mixing zone complies with the SIP for priority pollutants.

- The mixing zone study indicates the maximum allowed dilution factor to be 347:1 for human health constituents. Section 1.4.2.2B of the SIP, in part states, *"The RWQCB shall deny or significantly limit a mixing zone and dilution credits as necessary to protect beneficial uses, meet the conditions of this Policy, or comply with other regulatory requirements."* The Central Valley Water Board has determined a dilution factor of 347:1 is not needed or necessary for the Discharger to achieve compliance with this Order.

- The Central Valley Water Board has determined the mixing zone complies with the Basin Plan for non-priority pollutants. The Basin Plan requires a mixing zone not adversely impact beneficial uses. Beneficial uses will not be adversely affected for the same reasons discussed above. In determining the size of the mixing zone, the Central Valley Water Board has considered the procedures and guidelines in Section 5.1 of USEPA's *Water Quality Standards Handbook*, 2nd Edition (updated July 2007) and Section 2.2.2 of the TSD. The SIP incorporates the same guidelines.

- The Central Valley Water Board has determined that allowing dilution factors that exceed those proposed by this Order would not comply with the State Anti-degradation Policy for receiving waters outside the allowable mixing zone for bis (2-ethylhexyl) phthalate, carbon tetrachloride, dichlorobromomethane, manganese, and methylene blue active substances. The State Water Board established California's antidegradation policy in State Water Board Resolution No. 68-16. Resolution No. 68-16 incorporates the federal antidegradation policy and requires that existing quality of waters be maintained unless degradation is justified based on specific findings. Item 2 of Resolution 68-16 states:

"Any activity which produces or may produce a waste or increased volume or concentration of waste and which dischargers or proposed to discharge to existing high quality waters will be required to meet waste discharge requirements which will result in the best practicable treatment or control of the discharge necessary to assure that (a) a pollution or nuisance will not occur and (b) the highest water quality consistent with maximum benefit to the people of the State will be maintained."

The effluent limitations established in the Order for bis (2-ethylhexyl) phthalate, carbon tetrachloride, dichlorobromomethane, manganese, and methylene blue active substances that have been adjusted for dilution credits provided in Table F-7 were developed based on performance of the Discharger's current wastewater treatment capabilities. Therefore, the Central Valley Water Board determined the effluent limitations required by this Order will result in the Discharger implementing best practicable treatment or control of the discharge necessary to assure that pollution or nuisance will not occur and the highest water quality consistent with maximum benefit to the people of the State will be maintained. The Central Valley Water Board also determined the Discharger will be in immediate compliance with the effluent limitations.

The Central Valley Water Board also determined establishing effluent limitations for bis (2-ethylhexyl) phthalate, carbon tetrachloride, dichlorobromomethane, manganese, and methylene blue active substances that have been adjusted for dilution credits provided in Table F-7 is consistent with Section 1.4.2.2B of the SIP that requires the Central Valley Water Board to shall deny or significantly limit a mixing zone and dilution credits as necessary to comply with other regulatory requirements.

- Therefore, the Central Valley Water Board has determined the effluent limitations established in the Order for bis (2-ethylhexyl) phthalate, carbon tetrachloride, dichlorobromomethane, manganese, and methylene blue active

substances that have been adjusted for dilution credits provided in Table F-7 are appropriate and necessary to comply with the Basin Plan, SIP, Federal anti-degradation regulations and Resolution 68-16.

Because the Discharger has not yet commenced discharges from the side-bank discharge point, Discharge Point No. 001, this Order requires the Discharger to conduct a mixing zone study following commencement of discharges to the Feather River to validate the location of the edge of the mixing zone and the dilution credits. A reopener has also been included to allow for the adjustment of effluent limitations—based on the results of the mixing zone verification—study, in order for the allowed mixing zone to be in accordance with all State and federal policies.

d. **Conversion Factors.** The CTR contains aquatic life criteria for arsenic, cadmium, chromium III, chromium (VI), copper, lead, nickel, silver, and zinc which are presented in dissolved concentrations. USEPA recommends conversion factors to translate dissolved concentrations to total concentrations. The default USEPA conversion factors contained in Appendix 3 of the SIP were used to convert the applicable dissolved criteria to total recoverable criteria.

e. **Hardness-Dependent CTR Metals Criteria.** The *California Toxics Rule* and the *National Toxics Rule* contain water quality criteria for seven metals that vary as a function of hardness. The lower the hardness the lower the water quality criteria. The metals with hardness-dependent criteria include cadmium, copper, chromium III, lead, nickel, silver, and zinc.

This Order has established the criteria for hardness-dependent metals based on the reasonable worst-case ambient hardness as required by the SIP[1], the CTR[1]

[1] The SIP does not address how to determine the hardness for application to the equations for the protection of aquatic life when using hardness-dependent metals criteria. It simply states, in Section 1.2, that the criteria shall be properly adjusted for hardness using the hardness of the receiving water.

and State Water Board Order No. WQO 2008-0008 (City of Davis). The SIP and the CTR require the use of "receiving water" or "actual ambient" hardness, respectively, to determine effluent limitations for these metals. (SIP, § 1.2; 40 CFR § 131.38(c)(4), Table 4, note 4.) The CTR does not define whether the term "ambient," as applied in the regulations, necessarily requires the consideration of upstream as opposed to downstream hardness conditions. Therefore, where reliable, representative data are available, the hardness value for calculating criteria can be the downstream receiving water hardness, after mixing with the effluent (Order WQO 2008-0008, p. 11). The Central Valley Water Board thus has considerable discretion in determining ambient hardness (Id., p.10). Guidance on the selection of the appropriate ambient hardness was provided by the State Water Board in Order No. WQO 2008-0008 (City of Davis).

The State Water Board allows, where reliable, representative data are available, the hardness value for calculating criteria can be the downstream receiving water hardness, after mixing with the effluent. (Order WQO 2008-0008, p. 11.) Regional water boards have considerable discretion in determining ambient hardness as long as the hardness values are protective under all flow conditions. (*Id.*, pp. 10-11.)

As discussed below, scientific literature provides a reliable method for calculating protective hardness-dependent CTR criteria, considering all discharge conditions. This methodology produces hardness-dependent CTR criteria based on the reasonable worst-case downstream ambient hardness that ensure these metals do not cause receiving water toxicity under any downstream receiving water condition. Under this methodology, the Central Valley Water Board considers all

---

[1] The CTR requires that, for waters with a hardness of 400 mg/L (as $CaCO_3$), or less, the actual ambient hardness of the surface water must be used. It further requires that the hardness values used must be consistent with the design discharge conditions for design flows and mixing zones.

hardness conditions that could occur in the ambient downstream receiving water after the effluent has mixed with the water body.[1] This ensures that effluent limitations are fully protective of aquatic life in all areas of the receiving water affected by the discharge under all flow conditions, at the fully mixed location, and throughout the water body including at the point of discharge into the water body.

i. **Conducting the Reasonable Potential Analysis (RPA).** The SIP in Section 1.3 states, "*The RWQCB shall…determine whether a discharge may: (1) cause, (2) have a reasonable potential to cause, or (3) contribute to an excursion above any applicable priority pollutant criterion or objective*." Section 1.3 provides a step-by-step procedure for conducting the RPA. The procedure requires the comparison of the maximum effluent concentration (MEC) and maximum ambient background concentration to the applicable criterion that has been properly adjusted for hardness. Unless otherwise noted, for the hardness-dependent CTR metals criteria the following procedures were followed for properly adjusting the criterion for hardness when conducting the RPA.

(a) The SIP requires a WQBEL if the MEC exceeds the applicable criterion, adjusted for hardness. For comparing the MEC to the applicable criterion, the "fully mixed" reasonable worst-case downstream ambient hardness was used to adjust the criterion. In this evaluation the portion of the receiving water affected by the discharge is analyzed. For hardness-dependent criteria, the hardness of the effluent has an impact on the determination of the applicable criterion in areas in the receiving water affected by the discharge. Therefore, for comparing the MEC to the applicable criterion, the reasonable worst-case downstream ambient hardness was used to

[1] All effluent discharges will change the ambient downstream metals concentration and hardness. It is not possible to change the metals concentration without also changing the hardness.

adjust the criterion. For this situation it is necessary to consider the hardness of the effluent in determining the applicable hardness to adjust the criterion. The procedures for determining the applicable criterion after proper adjustment using the reasonable worst-case downstream hardness is outlined in subsection ii, below.

(b) The SIP requires a WQBEL if the receiving water is impaired upstream (outside the influence) of the discharge, i.e., if the maximum ambient background concentration of a pollutant exceeds the applicable criterion, adjusted for hardness.[1] For comparing the maximum ambient background concentration to the applicable criterion, the reasonable worst-case upstream ambient hardness was used to adjust the criteria. This is appropriate, because this area is outside the influence of the discharge. Since the discharge does not impact the upstream hardness, the effect of the effluent hardness was not included in this evaluation.

ii. Calculating WQBELs. The remaining discussion in this section relates to the development of WQBELs when it has been determined that the discharge has reasonable potential to cause or contribute to an exceedance of the CTR hardness-dependent metals criteria in the receiving water.

A 2006 Study[2] developed procedures for calculating the ECA[3] for CTR hardness-dependent metals. The 2006 Study demonstrated that it is necessary to evaluate all discharge conditions (e.g., high and low flow conditions) and the hardness and metals concentrations of the effluent and receiving water when determining the appropriate ECA for these hardness-dependent metals.

---

[1] The pollutant must also be detected in the effluent.

[2] Emerick, R.W.; Borroum, Y.; & Pedri, J.E., 2006. California and National Toxics Rule Implementation and Development of Protective Hardness Based Metal Effluent Limitations. WEFTEC, Chicago, Ill.

[3] The ECA is defined in Appendix 1 of the SIP (page Appendix 1-2). The ECA is used to calculate WQBELs in accordance with Section 1.4 of the SIP.

This method is superior to relying on downstream receiving water samples alone because it captures all possible mixed conditions in the receiving water. Both receiving water and effluent hardness vary based on flow and other factors, but the variability of receiving water and effluent hardness is sometimes independent. Using a calculated hardness value ensures that the Central Valley Water Board considers all possible mixed downstream values that may result from these two independent variables. Relying on receiving water sampling alone is less likely to capture all possible mixed downstream conditions.

The equation describing the total recoverable regulatory criterion, as established in the CTR[1], is as follows:

$$\text{CTR Criterion} = \text{WER} \times (e^{m[\ln(H)]+b}) \qquad \text{(Equation 1)}$$

Where:

H = hardness (as $CaCO_3$)[2]
WER = water-effect ratio
m, b = metal- and criterion-specific constants

In accordance with the CTR, the default value for the WER is 1. A WER study must be conducted to use a value other than 1. The constants “m” and “b” are specific to both the metal under consideration, and the type of total recoverable criterion (i.e., acute or chronic). The metal-specific values for these constants are provided in the CTR at paragraph (b)(2), Table 1.

The equation for the ECA is defined in Section 1.4, Step 2, of the SIP and is as follows:

---

[1] 40 CFR § 131.38(b)(2).

[2] For this discussion, all hardness values are in mg/L as $CaCO_3$.

ECA = C (when C $\leqslant$ B[1]) (Equation 2)

Where:

C = the priority pollutant criterion/objective, adjusted for hardness (see Equation 1, above)

B = the ambient background concentration

The 2006 Study demonstrated that the relationship between hardness and the calculated criteria is the same for some metals, so the same procedure for calculating the ECA may be used for these metals. The same procedure can be used for chronic cadmium, chromium III, copper, nickel, and zinc. These metals are hereinafter referred to as "Concave Down Metals". "Concave Down" refers to the shape of the curve represented by the relationship between hardness and the CTR criteria in Equation 1. Another similar procedure can be used for determining the ECA for acute cadmium, lead, and acute silver, which are referred to hereafter as "Concave Up Metals".

<u>ECA for Chronic Cadmium, Chromium III, Copper, Nickel, and Zinc</u> - For Concave Down Metals (i.e., chronic cadmium, chromium III, copper, nickel, and zinc) the 2006 Study demonstrates that when the effluent is in compliance with the CTR criteria and the upstream receiving water is in compliance with the CTR criteria, any mixture of the effluent and receiving water will always be in compliance with the CTR criteria.[2] The 2006 Study proves that regardless of whether the effluent hardness is lower or greater than the upstream hardness, the reasonable worst-case flow condition is the effluent dominated condition (i.e., no receiving water flow).[3] Consequently, for

---

[1] The 2006 Study assumes the ambient background metals concentration is equal to the CTR criterion (i.e., C $\leqslant$B)

[2] 2006 Study, p. 5700

[3] There are two typographical errors in the 2006 Study in the discussion of Concave Down Metals when the effluent hardness is less than the receiving water hardness. The effluent and receiving water hardness were

Concave Down Metals, the CTR criteria have been calculated using the downstream ambient hardness under this condition.

The effluent hardness ranged from 101 mg/L to 157 mg/L, based on 32 samples from May 2008 to April 2011. The upstream receiving water hardness varied from 28 mg/L to 88 mg/L, based on 35 samples collected between May 2008 and April 2011. Under the effluent dominated condition, the reasonable worst-case downstream ambient hardness is 101 mg/L. As demonstrated in the example shown in Table F-8, below, using this hardness to calculate the ECA for all Concave Down Metals will result in WQBELs that are protective under all flow conditions, from the effluent dominated condition to high flow condition. This example for copper assumes the following conservative conditions for the upstream receiving water:

- Upstream receiving water always at the lowest observed upstream receiving water hardness (i.e., 28 mg/L)
- Upstream receiving water copper concentration always at the CTR criteria (i.e., no assimilative capacity).

Using these reasonable worst-case receiving water conditions, a simple mass balance (as shown in Equation 3, below) accounts for all possible mixtures of effluent and receiving water under all flow conditions.

$$C_{MIX} = C_{RW} \times (1\text{-}EF) + C_{Eff} \times (EF) \qquad \text{(Equation 3)}$$

Where:

C_{MIX} = Mixed concentration (e.g. metals or hardness)

---

transposed in the discussion, but the correct hardness values were used in the calculations. The typographical errors were confirmed by the author of the 2006 Study, by email dated 1 April 2011, from Dr. Robert Emerick to Mr. James Marshall, Central Valley Water Board.

C_{RW} = Upstream receiving water concentration

C_{Eff} = Effluent concentration

EF = Effluent Fraction

In this example, for copper, for any receiving water flow condition (high flow to low flow), the fully-mixed downstream ambient copper concentration is in compliance with the CTR criteria.[1]

[1] This method considers the actual lowest upstream hardness and actual lowest effluent hardness to determine the reasonable worst-case ambient downstream hardness under all possible receiving water flow conditions. Table F-8 demonstrates that the receiving water is always in compliance with the CTR criteria at the fully-mixed location in the receiving water. It also demonstrates that the receiving water is in compliance with the CTR criteria for all mixtures from the point of discharge to the fully-mixed location. Therefore, a mixing zone is not used for compliance.

Table F-8. Copper ECA Evaluation

				Lowest Observed Effluent Hardness	**101 mg/L (as $CaCO_3$)**
				Lowest Observed Upstream Receiving Water Hardness	**28 mg/L (as $CaCO_3$)**
				Highest Assumed Upstream Receiving Water Copper Concentration	**3.1 µg/L[1]**
				Copper $ECA_{chronic}$[2]	**9.4 µg/L**
Effluent Fraction[6]		**Fully Mixed Downstream Ambient Concentration**			
		Hardness[3] (mg/L)	**CTR Criteria[4] (µg/L)**	**Copper[5] (µg/L)**	**Complies with CTR Criteria**
High Flow	1%	29	3.2	3.2	**Yes**
	5%	32	3.5	3.5	**Yes**
	15%	39	4.2	4.1	**Yes**
	25%	46	4.8	4.7	**Yes**
	50%	65	6.4	6.3	**Yes**
	75%	83	7.9	7.8	**Yes**
Low Flow	100%	101	9.4	9.4	**Yes**

1 Highest assumed upstream receiving water copper concentration calculated using Equation 1 for chronic criterion at a hardness of 28 mg/L.

2 ECA calculated using Equation 1 for chronic criterion at a hardness of 101 mg/L.

3 Fully mixed downstream ambient hardness is the mixture of the receiving water and effluent hardness at the applicable effluent fraction using Equation 3.

4 Fully mixed downstream ambient criteria are the chronic criteria calculated using Equation 1 at the mixed hardness.

5 Fully mixed downstream ambient copper concentration is the mixture of the receiving water and effluent copper concentrations at the applicable effluent fraction using Equation 3.

6 The effluent fraction ranges from 1% at the high receiving water flow condition, to 100% at the lowest receiving water flow condition (i.e., effluent dominated).

ECA for Acute Cadmium, Lead, and Acute Silver - For Concave Up Metals (i.e., acute cadmium, lead, and acute silver), the relationship between hardness and the metals criteria is different than for Concave Down Metals. The 2006 Study demonstrates that for Concave Up Metals, the effluent and upstream receiving water can be in compliance with the CTR criteria, but the resulting mixture may contain metals concentrations that exceed the CTR

criteria and could cause toxicity. For these metals, the 2006 Study provides a mathematical approach to calculate the ECA that is protective of aquatic life, in all areas of the receiving water affected by the discharge, under all discharge and receiving water flow (see Equation 4, below).

The ECA, as calculated using Equation 4, is based on the reasonable worst-case upstream receiving water hardness, the lowest observed effluent hardness, and assuming no receiving water assimilative capacity for metals (i.e., ambient background metals concentrations are at their respective CTR criterion). Equation 4 is not used in place of the CTR equation (Equation 1). Rather, Equation 4, which is derived using the CTR equation, is used as a direct approach for calculating the ECA. This replaces an iterative approach for calculating the ECA. The CTR equation has been used to evaluate the receiving water downstream of the discharge at all discharge and flow conditions to ensure the ECA is protective (e.g., see Table F-9).

$$\text{ECA} \quad \left(\frac{m(H_e - H_{rw})\left(e^{m\{ln(H_{rw})\}+b}\right)}{H_{rw}} \right) + e^{m\{ln(H_{rw})\}+b} \qquad \text{(Equation 4)}$$

(Equation 4)

Where:

m, b = criterion specific constants (from CTR)
H_e = lowest observed effluent hardness
H_{rw} = reasonable worst-case upstream receiving water hardness

An example similar to the Concave Down Metals is shown for lead, a Concave Up Metal, in Table F-9, below. As previously mentioned, the lowest effluent hardness is 101 mg/L, while the upstream receiving water hardness ranged from 28 mg/L to 88 mg/L. In this case, the reasonable worst-case

upstream receiving water hardness to use in Equation 4 to calculate the ECA is 28 mg/L.

Using the procedures discussed above to calculate the ECA for all Concave Up Metals will result in WQBELs that are protective under all potential effluent/receiving water flow conditions (high flow to low flow) and under all known hardness conditions, as demonstrated in Table F-9, for lead.

Table F-9. Lead ECA Evaluation

Lowest Observed Effluent Hardness					**101 mg/L**
Reasonable Worst-case Upstream Receiving Water Hardness					**28 mg/L**
Reasonable Worst-case Upstream Receiving Water Lead Concentration					**0.63 µg/L[1]**
Lead $ECA_{chronic}$[2]					**2.7 µg/L**
		Fully Mixed Downstream Ambient Concentration			
Effluent Fraction[6]		**Hardness[3] (mg/L) (as $CaCO_3$)**	**CTR Criteria[4] (µg/L)**	**Lead[5] (µg/L)**	**Complies with CTR Criteria**
High Flow	1%	29	0.65	0.65	**Yes**
	5%	32	0.74	0.73	**Yes**
	15%	39	0.96	0.94	**Yes**
	25%	46	1.2	1.2	**Yes**
	50%	65	1.8	1.7	**Yes**
	75%	83	2.5	2.2	**Yes**
Low Flow	100%	101	3.2	2.7	**Yes**

[1] Reasonable worst-case upstream receiving water lead concentration calculated using Equation 1 for chronic criterion at a hardness of 28 mg/L.

[2] ECA calculated using Equation 4 for chronic criteria.

[3] Fully mixed downstream ambient hardness is the mixture of the receiving water and effluent hardness at the applicable effluent fraction.

[4] Fully mixed downstream ambient criteria are the chronic criteria calculated using Equation 1 at the mixed hardness.

[5] Fully mixed downstream ambient lead concentration is the mixture of the receiving water and effluent lead concentrations at the applicable effluent fraction.

[6] The effluent fraction ranges from 1% at the high receiving water flow condition, to 100% at the lowest receiving water flow condition (i.e., effluent dominated).

Based on the procedures discussed above, Table F-10 lists all the CTR hardness-dependent metals and the associated ECA used in this Order.

Table F-10. Summary of ECA Evaluations for CTR Hardness-dependent Metals

CTR Metals	ECA (µg/L, total recoverable)	
	Acute	Chronic
Copper	14	9.4
Chromium III	1,750	209
Cadmium	4.2	2.5
Lead	70	2.7
Nickel	473	53
Silver	2.5	--
Zinc	121	121

3. Determining the Need for WQBELs

a. The Central Valley Water Board conducted the RPA in accordance with section 1.3 of the SIP. Although the SIP applies directly to the control of CTR priority pollutants, the State Water Board has held that the Central Valley Water Board may use the SIP as guidance for water quality-based toxics control.[1] The SIP states in the introduction "*The goal of this Policy is to establish a standardized approach for permitting discharges of toxic pollutants to non-ocean surface waters in a manner that promotes statewide consistency.*" Therefore, in this Order the RPA procedures from the SIP were used to evaluate reasonable potential for both CTR and non-CTR constituents, except for non-CTR constituents where the MCL is the applicable water quality objective and as otherwise described in IV.C.3.b and IV.C.3.d of this Fact Sheet. The RPA was based on information submitted as part of the application, in studies, and as directed by monitoring and reporting programs.

b. Constituents with No Reasonable Potential. WQBELs are not included in this Order for constituents that do not demonstrate reasonable potential; however, monitoring for those pollutants is established in this Order as required by the SIP. If the results of effluent monitoring demonstrate reasonable potential, this

[1] See Order WQO 2001-16 (Napa) and Order WQO 2004-0013 (Yuba City).

Order may be reopened and modified by adding an appropriate effluent limitation.

i. **Aluminum** is the third most abundant element in the earth's crust and is ubiquitous in both soils and aquatic sediments. When mobilized in surface waters, aluminum has been shown to be toxic to various fish species. However, the potential for aluminum toxicity in surface waters is directly related to the chemical form of aluminum present, and the chemical form is highly dependent on water quality characteristics that ultimately determine the mechanism of aluminum toxicity. Surface water characteristics including, pH, temperature, colloidal material, fluoride and sulfate concentrations, and total organic carbon all influence aluminum speciation and its subsequent bioavailability to aquatic life.

Surface water pH can also drive the ionoregulatory versus respiratory effects of aluminum on fish, because the chemical conditions at the fish gill surface are thought to modify aluminum speciation and sorption. Aluminum toxicity particularly damages respiratory organs, such as fish gills. However, water passing over the gills can become more basic due to neutralization of acidic water by ammonia (NH_3), which can lead to precipitation and polymerization of aluminum depositing on the gill surface. Then the accumulation of aluminum deposits on the gill surface enhances the rates of sloughing and proliferation of fish lamellae cells (hyperplasia of lamellae).

Calcium [hardness] concentrations in surface water may also reduce aluminum toxicity by competing with monomeric aluminum (Al^{3+}) binding to negatively charged fish gills and by keeping tight junctions between epithelial cells intact.

"Given Al [aluminum] speciation and behavior in complex solutions, the mechanism responsible for toxicity will probably be dependent on pH and calcium concentration of a given solution. Therefore, understanding Al

speciation chemistry and its influence on the mechanisms of toxicity to fish and invertebrates are important to interpreting the toxicological studies which form the basis of AWQC [Ambient Water Quality Criteria] development."(Arid West, 2006) Failure to identify and qualify the various forms of aluminum present in surface waters inadequately assesses aluminum toxicity. Many analytical techniques used for aluminum determinations require that acid digestion of the raw water is sampled prior to chemical analysis. These procedures, while generally adequate for measuring 'total' aluminum, do not provide the information necessary for the faction of aluminum that is toxic or potentially toxic to aquatic organisms.

(a) WQO. Aluminum is not a CTR constituent. The Code of Federal Regulations promulgated criteria for priority toxic pollutants for California's surface waters as part of section 131.38 Establishment of Numeric Criteria for Priority Toxic Pollutants for the State of California (California Toxics Rule or CTR), including metals criteria. Freshwater aquatic life criteria for metals are expressed as a function of total hardness. However, aluminum criteria were not promulgated as part of the CTR. Absent numeric aquatic life criteria for aluminum, WQBEL's in the Central Valley Region's NPDES permits are based on the Basin Plans' narrative toxicity objective. The Basin Plans' *Policy for Application of Water Quality Objectives* requires the Central Valley Water Board to consider, "on a case-by-case basis, direct evidence of beneficial use impacts, all material and relevant information submitted by the discharger and other interested parties, and relevant numerical criteria and guidelines developed and/or published by other agencies and organizations. In considering such criteria, the Board evaluates whether the specific numerical criteria which are available through these sources and through other information supplied to the Board, are relevant and appropriate to the situation at hand and, therefore, should be used in determining compliance with the narrative objective." Relevant information includes, but is not limited to the following: (1) USEPA Guidelines for Deriving Numerical National Water

Quality Criteria for the Protection of Aquatic Organisms and Their Uses, (2) USEPA Ambient Water Quality Criteria (AWQC), (3) AWQC-Correction, (4) the Arid West Water Quality Research Project and Reports, and (5) site-specific aluminum studies conducted by dischargers within the Central Valley Region. (Basin Plan, p. IV.-17.00; *see also,* 40 CFR 122.44(d)(vi).)

USEPA's *Ambient Water Quality Criteria for Aluminum (AWQC) - 1988*. In 1988, based on the scientific knowledge of that time, USEPA recommended acute and chronic criteria of 750 µg/L and 87 µg/L, respectively. USEPA attempted to derive the water quality criteria for aluminum in accordance with the steps in their Guidelines for Deriving Numerical National Water Quality Criteria for the Protection of Aquatic Organisms and Their Uses as described below:

1) USEPA calculated 15 Species Mean Acute Values (SMAVs) out of the 26 acute toxicity test results (Table 1, USEPA 1988).
2) From the 15 SMAV's, USEPA compiled 14 Genus Mean Acute Values (GMAVs) (Table 3, USEPA 1988).
3) The four most sensitive species were ranked in the following order:

Rank	Species	Common Name	GMAV
1	*Ceriodaphnia dubia*	Clandoceran	2,648
2	*Salvelinus fontinalis*	Brook trout	3,600
3	*Salmo gairdneri*	Rainbow trout	10,390
4	*Gammarus pseudolimnaeus*	Amphipod	22,000

From these GMAV's, the Final Acute Value (FAV) at a pH between 6.5 and 9.0 was calculated to be 1,496 µg/L. Thus, the acute criterion equals 748 µg/L, which is one-half the FAV.

4) Chronic toxicity values (Table 2) were determined with the three freshwater species, and the acute-chronic ratios (ACR) were calculated as shown below:

Species	Hardness ($CaCO_3$)	pH	Acute Value (µg/L)	Chronic Value (µg/L)	ACR
Ceriodaphnia dubia	50	7.15	1900	1908	0.9958
Dahnia magna	220	8.3	38200	742	51.27
Pimephales promelas	220	7.24 - 8.15	35000	3288	10.64

5) and 6) A Species Mean ACR (SMACR) was not calculated; therefore, the Final ACR (FACR) was determined to be 0.9958, based on the acutely sensitive species (*Ceriodaphnia dubia*). However, according to the Guidelines, the Final ACR cannot be less than 2, because a FACR lower than 2 would result in the Final Chronic Value (FCV) exceeding the acute criterion. Therefore, the default 2 was used as the FACR.

7) The Final Chronic Value (FCV) is calculated as follows:

$$FCV = \frac{FAV}{FACR}$$

The FCV equals the FAV of 1,496 µg/L divided by the FACR of 2, which equates to the same value as the acute criterion, 748 µg/L. However, USEPA lowered the chronic criterion to 87 µg/L, based on striped bass (Buckler, et al.) and brook trout (Cleveland, et al.) studies conducted in sterile lab waters with hardness at approximately 12 mg/L as $CaCO_3$ that, in part, indicated at pH of 6.5, chronic toxicity above aluminum concentrations of 87.2 µg/L (which resulted in zero percent dead after seven days) and again at pH 6.5-6.6 and concentrations above 88 µg/L (which resulted in four percent weight reduction after 60 days), respectively. Dissimilarly, USEPA determined that the Buckler, et al. study was not an appropriate toxicity test to include in the chronic toxicity database for calculating a Final Chronic Equation because (a) the pH of the dilution water was less than 6.5,

(b) aluminum was a component of an effluent or mixture, and (c) the control mortality was too high in many tests. For unknown reasons, USEPA also determined that the Cleveland, et al. was not an appropriate chronic toxicity test either.

In the AWQC for Aluminum 1988 document, USEPA discusses the complexities of aluminum speciation, giving evidence that USEPA was aware that aluminum toxicity is related to speciation that is driven by water quality characteristics. USEPA went on to quote several studies that suggest pH is a driver of aluminum toxicity. USEPA went as far as to quote a study by Seip et al. (1984) that stated, "the simple hydroxides ($[Al(OH)]^{2+}$ and $[Al(OH)_2]^{+}$) are regarded as the most dangerous forms while organically bound Al and polymeric forms are less toxic or essentially harmless." Nevertheless, USEPA still based the Final Chronic Value on total aluminum concentrations from two studies that were conducted at pH of 6.5 - 6.6 and hardness at approximately 10 to 12 mg/L as $CaCO_3$ for all surface waters without consideration of the unique and diverse water quality characteristics.

Additionally, concerns with Buckler et al. and Cleveland et al. is that the data is inconsistent within each study. One possibility with the inconsistencies is that aluminum speciation was not measured as part of these tests so the toxic portion of aluminum remains unknown, only the total or dissolved amounts are known. There is no correlation between (a) the amount of total or dissolved aluminum present in a particular sample at a certain pH and hardness and (b) the actual bioavailability and toxicity to aquatic life due to the complex nature of aluminum speciation and other influences like organic material present in surface waters.

In April 1999, USEPA released the National Recommended Water Quality Criteria-Correction. There were no corrections to the 1988 aluminum

recommended criteria; however, USEPA recognized that they were aware of field data indicating that many high quality waters in the U.S. contain more than 87 µg/L aluminum, when either total recoverable or dissolved is measured.

Local Environmental Conditions. Twenty-one site-specific aluminum toxicity tests have also been conducted within the Central Valley Region. The most sensitive species as determined by USEPA's 1988 chronic database and Arid West's 2006 expansion of USEPA's 1988 chronic database, *Ceriodaphnia dubia*, was also used as the test specie in many of these local site-specific studies.

As shown in the following table, all EC_{50} toxicity study result values are at concentrations of aluminum above 5000 µg/L. Even at a critically low hardness value of 16 mg/L as $CaCO_3$, aluminum toxicity effects in the studied Central Valley Region's surface waters (Auburn Ravine) show the Total Aluminum EC_{50} value at concentrations above 5,160 µg/L. Thus this representative data and the toxic effects of aluminum in the Central Valley Region's surface waters is less toxic to resident species. All aluminum toxicity study results in these regional water bodies show that USEPA's recommended 87 µg/L chronic criterion is overly stringent for the Region's circumneutral pH surface waters at hardness ranging from 16 to 156 mg/L as $CaCO_3$.

Table F-11. Central Valley Region Site-specific Toxicity Data

Discharger	Species	Test Waters	Hardness Value	Total Aluminum EC_{50} Value	pH
Auburn	*Ceriodaphnia dubia*	Effluent	99	>5270	7.44
	" "	Surface Water	16	>5160	7.44
Manteca	" "	Surface Water/Effluent	124	>8800	9.14
	" "	Effluent	117	>8700	7.21
	" "	Surface Water	57	7823	7.58

	" "	Effluent	139	>9500	7.97
	" "	Surface Water	104	>11000	8.28
	" "	Effluent	128	>9700	7.78
	" "	Surface Water	85	>9450	7.85
	" "	Effluent	106	>11900	7.66
	" "	Surface Water	146	>10650	7.81
Modesto	" "	Surface Water/Effluent	120/156	31604	8.96
Yuba City	**" "**	**Surface Water/Effluent**	**114/164[1]**	**>8000**	**7.60/7.46**
Placer County	" "	Effluent	150	>5000	7.4 - 8.7
Manteca	*Daphnia magna*	Surface Water/Effluent	124	>8350	9.14
Modesto	" "	Surface Water/Effluent	120/156	>11900	8.96
Yuba City	**" "**	**Surface Water/Effluent**	**114/164[1]**	**>8000**	**7.60/7.46**
Manteca	*Oncorhynchus mykiss* (rainbow trout)	Surface Water/Effluent	124	>8600	9.14
Auburn	" "	Surface Water	16	>16500	7.44
Modesto	" "	Surface Water/Effluent	120/156	>34250	8.96
Yuba City	**" "**	**Surface Water/Effluent**	**114/164[1]**	**>8000**	**7.60/7.46**

[1] Hardness values may be biased high because the EDTA titrimetic method is subject to interferences that measure as hardness (barium, cadmium, lead, manganese, strontium, and zinc will be measured as hardness) producing hardness numbers that are likely to be greater than the calculation of hardness based upon the ICP analysis of calcium and magnesium. Upstream receiving water hardness ranged from 30 to 50.9 mg/L as $CaCO_3$ between January 2008 and August 2011. Furthermore, the upstream receiving water hardness was 37 mg/L as $CaCO_3$ on 4 October 2005, seven days prior to the Feasibility Assessment (first phase of a Water Effects Ratio study) sample collection date of 11 October 2005. It is likely that matrix interferences from other metals were responsible for the unexpected hardness values reported by Pacific EcoRisk.

Site-specific Conditions. The Linda County effluent discharge point EFF-001 is approximately 3,500 feet upstream of Yuba City's diffuser. As shown in the table below, monitoring data indicates that the hardness of the effluent and receiving water are not similar to the low hardness conditions under which the chronic criterion for aluminum was developed. Thus, it appears as if the NAWQC chronic criterion of 87 µg/L should not be used as the basis for determining compliance with the Basin Plan

narrative toxicity objective and subsequently establishing effluent limitations for the discharge to the Feather River.

Table F-12. Site-Specific pH and Hardness Characteristics

Parameter	Units	Test Conditions for Applicability of Chronic Criterion		Effluent	Receiving Water
		Striped Bass	Brook Trout		
pH	standard units	6.5	6.5 - 6.6	6.52 - 7.55	5.98 - 9.98
Hardness, Total (as $CaCO_3$)	mg/L	<10	12.3	101 - 157	28 - 88
Aluminum, Total Recoverable	µg/L	87.2	88	190	--

Furthermore, the City of Yuba City conducted aluminum water effects ratio (WER) sampling, testing the toxicity of varying aluminum concentrations on *Ceriodaphnia dubia*, *Daphnia magna*, *Oncorhynchus mykiss* (rainbow trout). The study was limited to 8,000 µg/L due to aluminum solubility. All three tests indicated a no-effects concentration (NOEC) of 8,000 µg/L and an EC_{50} of >8,000 µg/L. This indicates that the aluminum WER is at least 53.5 for all three species. Additionally, other major dischargers in the Central Valley Region have conducted WER sampling for aluminum at the City of Manteca, City of Modesto, City of Auburn, and Placer County. These additional studies had similar results to the City of Yuba City's WER sampling study. Therefore, the Central Valley Water Board does not consider the NAWQC aluminum chronic criterion of 87 µg/L to be applicable to the water quality conditions of the receiving water.

State of California Department of Public Health (DPH) has established secondary maximum contaminant levels (MCLs) to assist public drinking water systems in managing their drinking water for aesthetic conditions such as taste, color, and odor. The secondary MCL for aluminum is 200 µg/L for the protection of MUN beneficial uses, applied as an annual average.

(b) RPA Results. The MEC for aluminum is 190 µg/L. Upstream receiving water data for aluminum is not available. Therefore, aluminum in the

discharge does not demonstrate reasonable potential to cause or contribute to an in-stream excursion above the Secondary MCL of 200 µg/L, and the effluent limitations for aluminum have not been retained in this Order. Removal of these effluent limitations is in accordance with federal antibacksliding regulations (see section IV.D.3 of the Fact Sheet).

i. Chloroform

(a) WQO. Chloroform is a priority pollutant; however, there are no applicable CTR criteria or MCLs for chloroform. DPH has developed a Primary MCL for total trihalomethanes (THMs), which includes chloroform, of 80 µg/L. In addition to chloroform, THMs include bromoform, chlorodibromomethane, and dichlorobromomethane. Order No. R5-2006-0096 established effluent limitations for chloroform based on the CalEPA Cancer Potency Factor as a Drinking Water Level of 1.1 µg/L. However, because the applicable MCL for THMs, which include chloroform, of 80 µg/L is considered by DPH to be the level necessary for protection of public health for drinking water, it is inappropriate to apply the Cancer Potency Factor of 1.1 µg/L to the discharge. Therefore, this Order uses the Primary MCL of 80 µg/L to interpret the narrative toxicity and chemical constituents objective in the Basin Plan for the protection of the MUN beneficial use.

(b) RPA Results. The MEC for chloroform was 3.7 µg/L. Chloroform was not detected in the upstream receiving water. The MECs for bromoform, chlorodibromomethane, and dichlorobromomethane were 0.29 µg/L, <0.17 µg/L, and 0.9 µg/L, respectively, and collectively do not exceed the MCL for THMs. Therefore, chloroform in the discharge does not demonstrate reasonable potential to cause or contribute to an in-stream excursion above the Primary MCL for THMs, and the effluent limitations for chloroform have not been retained in this Order. Removal of these

effluent limitations is in accordance with federal antibacksliding regulations (see section IV.D.3 of the Fact Sheet).

ii. Chromium (VI)

(a) WQO. The CTR includes maximum 1-hour average and 4-day average criteria of 16 µg/L and 11 µg/L, respectively, for chromium (VI) for the protection of freshwater aquatic life. Order No. R5-2006-0096 included effluent limitations based on the chronic CTR criterion.

(b) RPA Results. Chromium (VI) was not detected in the effluent or upstream receiving water. Therefore, the discharge does not demonstrate reasonable potential to cause or contribute to an in-stream excursion above CTR water quality criteria for chromium (VI) and the effluent limitations for chromium (VI) have not been retained in this Order. Removal of these effluent limitations is in accordance with federal antibacksliding regulations (see section IV.D.3 of the Fact Sheet).

iii. cis-1,2-Dichloroethene

(a) WQO. DPH has adopted a Primary MCL for cis-1,2-dichloroethene of 6 µg/L, which is protective of the Basin Plan's chemical constituent objective. Order No. R5-2006-0096 included an effluent limitation for cis-1,2-dichloroethene based on the Primary MCL.

(b) RPA Results. Cis-1,2-dichloroethene was not detected in the effluent or upstream receiving water with a minimum detection limit (MDL) of 0.2 µg/L. Therefore, the discharge does not demonstrate reasonable potential to cause or contribute to an in-stream excursion above the Primary MCL for cis-1,2-dichloroethene and the effluent limitations for cis-1,2-dichloroethene have not been retained in this Order. Removal of these effluent limitations is in accordance with federal antibacksliding regulations (see section IV.D.3 of the Fact Sheet).

iv. Cyanide

(a) WQO. The CTR includes maximum 1-hour average and 4-day average criteria of 22 µg/L and 5.2 µg/L, respectively, for cyanide for the protection of freshwater aquatic life. Order No. R5-2006-0096 included effluent limitations for cyanide based on the CTR criterion for the protection of aquatic life.

(b) RPA Results. Cyanide was not detected in the effluent with an MDL of 0.005 µg/L or the upstream receiving water with an MDL of 2.0 µg/L. Therefore, the discharge does not demonstrate reasonable potential to cause or contribute to an in-stream excursion above CTR water quality criteria for cyanide and the effluent limitations for cyanide have not been retained in this Order. Removal of these effluent limitations is in accordance with federal antibacksliding regulations (see section IV.D.3 of the Fact Sheet).

v. Iron

(a) WQO. The Secondary MCL - Consumer Acceptance Limit for iron is 300 µg/L. Order No. R5-2006-0096 included an effluent limitation for iron based on the Secondary MCL.

(b) RPA Results. The MEC for iron was 250 µg/L. Background receiving water monitoring for iron is not available. Therefore, the discharge does not demonstrate reasonable potential to cause or contribute to an in-stream excursion above the Secondary MCL for iron and the effluent limitations for iron have not been retained in this Order. Removal of these effluent limitations is in accordance with federal antibacksliding regulations (see section IV.D.3 of the Fact Sheet).

vi. Lead

(a) WQO. The CTR includes hardness dependent criteria for the protection of freshwater aquatic life for lead. Order No. R5-2006-0096 included effluent limitations for lead based on the CTR chronic criterion for the protection of aquatic life. Using the default conversion factors and reasonable worst-case measured hardness as described in section IV.C.2.e of this Fact Sheet, the applicable acute (1-hour average) and chronic (4-day average) criteria for the effluent are 70 µg/L and 2.7 µg/L, respectively, as total recoverable. Using the default conversion factors and reasonable worst-case measured hardness as described in section IV.C.2.e of this Fact Sheet, the applicable acute (1-hour average) and chronic (4-day average) criteria for the receiving water are 16 µg/L and 0.63 µg/L, respectively, as total recoverable.

(b) RPA Results. The MEC for lead was 0.76 µg/L, while the maximum observed upstream receiving water concentration was 0.11 µg/L. Therefore, the discharge does not demonstrate reasonable potential to cause or contribute to an in-stream excursion above the chronic criterion for lead and the effluent limitations for lead have not been retained in this Order. Removal of these effluent limitations is in accordance with federal antibacksliding regulations (see section IV.D.3 of the Fact Sheet).

vii. Methoxychlor

(a) WQO. DPH has adopted a Primary MCL for methoxychlor of 30 µg/L, which is protective of the Basin Plan's chemical constituent objective. Order No. R5-2006-0096 included effluent limitations for methoxychlor based on USEPA's NAWQC recommended instantaneous maximum of 0.03 µg/L for the protection of aquatic life.

(b) RPA Results. Methoxychlor was not detected in the effluent with an MDL of 0.0024 µg/L. Upstream receiving water data for methoxychlor is not

available. Therefore, the discharge does not demonstrate reasonable potential to cause or contribute to an in-stream excursion above the Basin Plan's narrative toxicity objective and the effluent limitations for methoxychlor have not been retained in this Order. Removal of these effluent limitations is in accordance with federal antibacksliding regulations (see section IV.D.3 of the Fact Sheet).

viii. Oil and Grease

(a) WQO. The Basin Plan contains a narrative oil and grease objective which states, "*Waters shall not contain oils, greases, waxes, or other materials in such concentrations that cause nuisance, result in a visible film or coating on the surface of the water or on objects in the water, or otherwise adversely affect beneficial uses.*" Order No. R5-2006-0096 contained an AMEL and maximum daily effluent limitation (MDEL) of 10 mg/L and 15 mg/L, respectively, to implement the narrative oil and grease objective.

(b) RPA Results. Oil and grease was detected at concentrations exceeding the applicable MDEL of 15 mg/L only twice out of 35 samples, with an MEC of 17 mg/L. Oil and grease used to be a problem at many POTWs and effluent limitations were necessary to protect the treatment plant and receiving waters. The Discharger is required to be covered under State Water Board Order 2006-0003, a Statewide General WDR for Sanitary Sewer Systems, which requires each enrollee to evaluate its service area to determine whether a fats, oils, and grease (FOG) control program is needed. If an enrollee determines that a FOG control program is not needed, the enrollee must provide justification for why it is not needed. If FOG is found to be a problem, the enrollee must prepare and implement a FOG source control program to reduce the amount of these substances discharged to the sanitary sewer system. The Discharger's compliance with the requirements of WQO 2006-0003 will ensure minimal

amounts of oil and grease are discharged into the Facility. Furthermore, the Discharger is constructing a tertiary treatment system which should also ensure that oil and grease is not discharged at concentrations that will cause or contribute to an exceedance of the narrative water quality objective. Based on monitoring data indicating that oil and grease has not frequently been detected at concentrations exceeding the MDEL in Order No. R5-2006-0096 and the requirement to obtain coverage under WQO 2006-0003, the discharge does not demonstrate reasonable potential to cause or contribute to an in-stream excursion above the Basin Plan water quality objective for oil and grease and the effluent limitations for oil and grease have not been retained in this Order. Removal of these effluent limitations is in accordance with federal antibacksliding regulations (see section IV.D.3 of the Fact Sheet).

ix. Persistent Chlorinated Hydrocarbon Pesticides

(a) WQO. The Basin Plan requires that no individual pesticides shall be present in concentrations that adversely affect beneficial uses; discharges shall not result in pesticide concentrations in bottom sediments or aquatic life that adversely affect beneficial uses; persistent chlorinated hydrocarbon pesticides shall not be present in the water column at detectable concentrations; and pesticide concentrations shall not exceed those allowable by applicable antidegradation policies. Persistent chlorinated hydrocarbon pesticides include aldrin; alpha-BHC; beta-BHC; gamma-BHC; delta-BHC; chlordane; 4,4-DDT; 4,4-DDE; 4,4-DDD; dieldrin; alpha-endosulfan; beta-endosulfan; endosulfan sulfate; endrin; endrin aldehyde; heptachlor; heptachlor epoxide; and toxaphene. The CTR also contains water quality criteria for individual pesticides for the protection of water and organisms. Order No. R5-2006-0096 included effluent limitations for persistent chlorinated hydrocarbon (i.e., organochlorine) pesticides based on the Basin Plan objective.

(b) RPA Results. Effluent and upstream receiving water monitoring of individual persistent chlorinated hydrocarbon pesticides resulted in no detected results for each individual persistent chlorinated hydrocarbon pesticide. Therefore, the discharge does not demonstrate reasonable potential to cause or contribute to an in-stream excursion above Basin Plan objective or CTR criteria for persistent chlorinated hydrocarbon pesticides and the effluent limitations for persistent chlorinated hydrocarbon pesticides have not been retained in this Order. Removal of these effluent limitations is in accordance with federal antibacksliding regulations (see section IV.D.3 of the Fact Sheet).

x. Polycyclic Aromatic Hydrocarbons (PAHs)

(a) WQO. PAHs are a group of over 100 different chemicals that are formed during the incomplete burning of coal, oil and gas, garbage, or other organic substances. PAHs include, among others, anthracene, benzo(a)anthracene, benzo(a)pyrene, benzo(b)fluoranthene, benzo(ghi)perylene, benzo(k)fluoranthene, chrysene, dibenzo(a,h)anthracene, fluoranthene, fluorine, indeno(1,2,3-cd)pyrene, naphthalene, phenanthrene, and pyrene. The CTR also contains water quality criteria for individual PAHs for the protection of water and organisms. Order No. R5-2006-0096 included effluent limitations for dibenzo(a,h)anthracene based on the CTR criterion for protection of human health for consumption of water and organisms of 0.0044 µg/L.

(b) RPA Results. Several PAHs were detected in a 9 July 2008 sample, including anthracene, benzo(a)anthracene, benzo(a)pyrene, benzo(b)fluoranthene, benzo(ghi)perylene, benzo(k)fluoranthene, chrysene, dibenzo(a,h)anthracene[1], fluoranthene, fluorine, indeno(1,2,3-cd)pyrene,

[1] As described in section II.D of this Fact Sheet, the Central Valley Water Board issued ACL Complaint No. R5-2009-0515 on 16 March 2009 which proposed to assess an administrative civil liability for an effluent

naphthalene, phenanthrene, and pyrene. A 2 August 2011 email from the contract laboratory Sierra Foothill Laboratory indicates that the results are more than 10 times the spike levels, and a 2 November 2011 letter from the sub-contract laboratory McCambell Analytical, Inc. indicates potential laboratory error for the sample. Therefore, the 9 July 2008 sample results for these constituents were not used for the RPA.

Fluoranthene was detected in the effluent on 13 October 2010 at a concentration of 0.06 µg/L, which does not exceed the applicable CTR criterion of 300 µg/L. Dibenzo(a,h)anthracene was not detected in 13 samples collected between July 2008 and June 2011. The remaining pollutants were not detected in samples collected on 17 August 2009 or 13 October 2010. Therefore, the discharge does not demonstrate reasonable potential to cause or contribute to an in-stream excursion above CTR criteria for individual PAHs and the effluent limitations for dibenzo(a,h)anthracene have not been retained in this Order. Removal of these effluent limitations is in accordance with federal antibacksliding regulations (see section IV.D.3 of the Fact Sheet).

xi. Settleable Solids

(a) WQO. For inland surface waters, the Basin Plan states that "[w]*ater shall not contain substances in concentrations that result in the deposition of material that causes nuisance or adversely affects beneficial uses*." Order No. R5-2006-0096 established an AMEL of 0.1 ml/L and an MDEL of 0.2 ml/L for settleable solids to implement the narrative settleable solids objective.

---

limitation violation for dibenzo(a,h)anthracene for this sample. The Discharger paid the mandatory minimum penalty.

(b) **RPA Results.** Settleable solids were not detected in the effluent. Because settleable solids have not been detected in the effluent and because the Discharger will provide tertiary treatment, the discharge from the Facility does not have a reasonable potential to cause or contribute to an excursion above the Basin Plan's narrative objective for settleable solids and the effluent limitations for settleable solids have not been retained in this Order. Removal of these effluent limitations is in accordance with federal antibacksliding regulations (see section IV.D.3 of the Fact Sheet).

xii. Tetrachloroethene

(a) **WQO.** The CTR includes a criterion of 0.8 µg/L for tetrachloroethene for the protection of human health for waters from which both water and organisms are consumed. Order No. R5-2006-0096 included effluent limitations for tetrachloroethene based on the CTR human health criterion.

(b) **RPA Results.** Tetrachloroethene was not detected in the effluent or upstream receiving water with an MDL of 0.17 µg/L. Therefore, the discharge does not demonstrate reasonable potential to cause or contribute to an in-stream excursion above CTR water quality criteria for tetrachloroethene and the effluent limitations for tetrachloroethene have not been retained in this Order. Removal of these effluent limitations is in accordance with federal antibacksliding regulations (see section IV.D.3 of the Fact Sheet).

xiii. Thiobencarb

(a) **WQO.** The Secondary MCL - Consumer Acceptance Limit for thiobencarb is 1.0 µg/L, which is used to implement the Basin Plan's chemical constituent objective for the protection of municipal and domestic supply. Order No. R5-2006-0096 included an effluent limitation for thiobencarb based on the Secondary MCL.

(b) **RPA Results.** Thiobencarb was not detected in the effluent with an MDL of 0.03 µg/L. Upstream receiving water data for thiobencarb is not available. Therefore, the discharge does not demonstrate reasonable potential to cause or contribute to an in-stream excursion above the Secondary MCL for thiobencarb and the effluent limitations for thiobencarb have not been retained in this Order. Removal of these effluent limitations is in accordance with federal antibacksliding regulations (see section IV.D.3 of the Fact Sheet).

xiv. Zinc

(a) **WQO.** The CTR includes hardness dependent criteria for the protection of freshwater aquatic life for zinc. Order No. R5-2006-0096 established effluent limitations for zinc based on the CTR chronic criterion for protection of aquatic life. Using the default conversion factors and reasonable worst-case measured hardness as described in section IV.C.2.e of this Fact Sheet, the applicable acute (1-hour average) and chronic (4-day average) criteria for the effluent are both 121 µg/L, as total recoverable. Using the default conversion factors and reasonable worst-case measured hardness as described in section IV.C.2.e of this Fact Sheet, the applicable acute (1-hour average) and chronic (4-day average) criteria for the receiving water are 41 µg/L, as total recoverable.

(b) **RPA Results.** The MEC for zinc was 58 µg/L, while the maximum observed upstream receiving water concentration was 4.5 µg/L. Therefore, the discharge does not demonstrate reasonable potential to cause or contribute to an in-stream excursion above the chronic criterion for zinc and the effluent limitations for zinc have not been retained in this Order. Removal of these effluent limitations is in accordance with federal antibacksliding regulations (see section IV.D.3 of the Fact Sheet).

c. **Constituents with Reasonable Potential.** The Central Valley Water Board finds that the discharge has a reasonable potential to cause or contribute to an in-

stream excursion above a water quality standard for ammonia, bis (2-ethylhexyl) phthalate, BOD_5, carbon tetrachloride, chlorine residual, copper, diazinon and chlorpyrifos, dichlorobromomethane, electrical conductivity, manganese, mercury, methylene blue active substances, nitrite, nitrite plus nitrate, pH, total coliform organisms, and TSS. WQBELs for these constituents are included in this Order. A summary of the RPA is provided in Attachment G, and a detailed discussion of the RPA for each constituent is provided below.

i. Ammonia

(a) WQO. The NAWQC for the protection of freshwater aquatic life for total ammonia, recommends acute (1-hour average; criteria maximum concentration or CMC) standards based on pH and chronic (30-day average; criteria continuous concentration or CCC) standards based on pH and temperature. USEPA also recommends that no 4-day average concentration should exceed 2.5 times the 30-day CCC. USEPA found that as pH increased, both the acute and chronic toxicity of ammonia increased. Salmonids were more sensitive to acute toxicity effects than other species. However, while the acute toxicity of ammonia was not influenced by temperature, it was found that invertebrates and young fish experienced increasing chronic toxicity effects with increasing temperature. Because the Feather River has a beneficial use of cold freshwater habitat and the presence of salmonids and early fish life stages in the Feather River is well-documented, the recommended criteria for waters where salmonids and early life stages are present were used.

The Basin Plan objective for pH in the receiving stream is the range of 6.5 to 8.5. In Order No. R5-2006-0096, the maximum permitted pH effluent limitation was reduced from 8.5 to 8.0 after the Discharger provided documentation demonstrating that historical effluent pH has not exceeded 8.0. Therefore, the maximum permitted effluent pH is 8.0. In order to protect against the worst-case short-term exposure of an

organism, a pH value of 8.0 was used to derive the acute criterion. The resulting acute criterion is 5.62 mg/L.

A chronic criterion was calculated for each day when paired temperature and pH were measured using receiving water data for temperature and pH recorded during the discharge season from the Discharger's monthly monitoring reports from May 2008 through April 2011. Rolling 30-day average criteria were calculated from upstream and downstream data using the criteria calculated for each day and the minimum observed 30-day average criterion was established as the applicable 30-day average chronic criterion, or 30-day CCC. The resulting 30-day CCC is 2.41 mg/L (as N). The 4-day average concentration is derived in accordance with the USEPA criterion as 2.5 times the 30-day CCC. Based on the 30-day CCC of 2.41 mg/L (as N), the 4-day average concentration that should not be exceeded is 6.03 mg/L (as N).

(b) RPA Results. Per Section 1.3, Step 7, of the SIP, the facility type may be used as information to aid in determining if a WQBEL is required. The Discharger is a POTW that treats domestic wastewater. Untreated domestic wastewater contains ammonia. Nitrification is a biological process that converts ammonia to nitrite and nitrite to nitrate. Denitrification is a process that converts nitrate to nitrite or nitric oxide and then to nitrous oxide or nitrogen gas, which is then released to the atmosphere. Once facility upgrades are complete, the Discharger will use nitrification to remove ammonia from the waste stream. Inadequate or incomplete nitrification may result in the discharge of ammonia to the receiving stream. Ammonia is known to cause toxicity to aquatic organisms in surface waters. Discharges of ammonia would violate the Basin Plan narrative toxicity objective. The MEC for ammonia was 36 mg/L. Therefore, ammonia in the discharge has a reasonable potential to cause or contribute to an in-stream excursion above the NAWQC.

(c) **WQBELs.** The Central Valley Water Board calculates WQBELs in accordance with SIP procedures for non-CTR constituents, and ammonia is a non-CTR constituent. The SIP procedure assumes a 4-day averaging period for calculating the long-term average discharge condition (LTA). However, USEPA recommends modifying the procedure for calculating permit limits for ammonia using a 30-day averaging period for the calculation of the LTA corresponding to the 30-day CCC. Therefore, while the LTAs corresponding to the acute and 4-day chronic criteria were calculated according to SIP procedures, the LTA corresponding to the 30-day CCC was calculated assuming a 30-day averaging period. The lowest LTA representing the acute, 4-day CCC, and 30-day CCC is then selected for deriving the AMEL and the MDEL. The remainder of the WQBEL calculation for ammonia was performed according to the SIP procedures. This Order contains a final AMEL and MDEL for ammonia of 2.4 mg/L and 3.5 mg/L, respectively, based on the NAWQC (chronic criterion).

(d) **Plant Performance and Attainability.** Analysis of the effluent data shows that the MEC of 36 µg/L is greater than the applicable WQBELs. TSO No. R5-2011-0056 provides a compliance schedule to achieve compliance with the final effluent limitations for ammonia by 31 December 2012. Consistent with TSO No. R5-2011-0056, a compliance time schedule for compliance with the ammonia effluent limitations is established in TSO No. R5-2011-0056-01 (as amended by Order No. R5-2012-XXXX), with compliance with final effluent limitations required by 31 December 2012, in accordance with Water Code section 13300, that requires preparation and implementation of a pollution prevention plan in compliance with Water Code section 13263.3.

ii. Bis (2-ethylhexyl) Phthalate

(a) WQO. The CTR includes a criterion of 1.8 µg/L for bis (2-ethylhexyl) phthalate for the protection of human health for waters from which both water and organisms are consumed.

(b) RPA Results. Bis (2-ethylhexyl) phthalate was detected in 15 of 16 samples collected between July 2007 and June 2011 at concentrations ranging from 1.9 µg/L to 16 µg/L. Bis (2-ethylhexyl) phthalate was not detected in the upstream receiving water based on three samples collected between July 2007 and June 2011. Bis (2-ethylhexyl) phthalate is a common contaminant of sample containers, sampling apparatus, and analytical equipment, and sources of the detected bis (2-ethylhexyl) phthalate may be from plastics used for sampling or analytical equipment. The Discharger indicated in a 2 August 2011 email that effluent and receiving water samples collected during the term of Order No. R5-2006-0096 were not collected and analyzed using "clean techniques" to ensure that sample containers, sampling apparatus, and analytical equipment are not sources of the detections. In the absence of evidence that the source of the detected samples is laboratory error, the Central Valley Water Board concludes that bis (2-ethylehxyl) phthalate in the discharge has a reasonable potential to cause or contribute to an in-stream excursion above the CTR criterion for the protection of human health.

(c) WQBELs. As described further in section IV.C.2.c of this Fact Sheet, assimilative capacity is available and a dilution credit of 347 is appropriate for calculating effluent limitations for bis (2-ethylhexyl) phthalate. Following the procedures established by the SIP for calculating WQBELs and applying a dilution credit of 347 to the CTR criterion, the resulting AMEL and MDEL for bis (2-ethylhexyl) phthalate are 297 µg/L and 545 µg/L, respectively. However, effluent limitations may only be as high as is justified under State and federal antidegradation policies.

Therefore, this Order establishes performance-based effluent limitations for bis (2-ethylhexyl) phthalate. In developing the performance-based MDEL, where there are 10 sampling data points or more, sampling and laboratory variability is accounted for by establishing limitations that are based on normally distributed data where 99.9% of the data points will lie within 3.3 standard deviations of the mean (Basic Statistical Methods for Engineers and Scientists, Kennedy and Neville, Harper and Row). Therefore, the MDEL in this Order is established as the mean plus 3.3 standard deviations of the available data. Similarly, a performance-based AMEL is based on normally distributed data where 95% of the data points will lie within 2.0 standard deviations of the mean. Therefore, the performance-based AMEL for bis (2-ethylhexyl) phthalate was calculated using the mean plus 2.0 standard deviations. This Order contains a final AMEL and MDEL for bis (2-ethylhexyl) phthalate of 18 µg/L and 24 µg/L, respectively, based on treatment plant performance.

(d) Plant Performance and Attainability. The effluent limitations established in this Order for bis (2-ethylhexyl) phthalate are based on the performance of the treatment system. The Central Valley Water Board concludes, therefore, that immediate compliance with these effluent limitations is feasible.

iii. Carbon Tetrachloride

(a) WQO. The CTR includes a criterion of 0.25 µg/L for carbon tetrachloride for the protection of human health for waters from which both water and organisms are consumed.

(b) RPA Results. The MEC for carbon tetrachloride was 3.5 µg/L while carbon tetrachloride was not detected in the upstream receiving water. Therefore, carbon tetrachloride in the discharge has a reasonable potential to cause or contribute to an in-stream excursion above the CTR criterion for the protection of human health.

(c) **WQBELs.** As described further in section IV.C.2.c of this Fact Sheet, assimilative capacity is available and a dilution credit of 347 is appropriate for calculating effluent limitations for carbon tetrachloride. Following the procedures established by the SIP for calculating WQBELs and applying a dilution credit of 347 to the CTR criterion, the resulting AMEL and MDEL for carbon tetrachloride are 35 µg/L and 70 µg/L, respectively. However, effluent limitations may only be as high as is justified under State and federal antidegradation policies. Therefore, this Order establishes performance-based effluent limitations for carbon tetrachloride. When there are less than 10 sampling data points available, the TSD recommends a coefficient of variation of 0.6 be utilized as representative of wastewater effluent sampling. The TSD recognizes that a minimum of 10 data points is necessary to conduct a valid statistical analysis. The multipliers contained in Table 5-2 of the TSD are used to determine an MDEL based on a long-term average objective. In this case, the long-term average objective is to maintain, at a minimum, the current plant performance level. Therefore, when there are less than 10 sampling points for a constituent, the performance-based limitations are based on 3.11 times the MEC to obtain the MDEL (TSD, Table 5 2) and 2.13 times the MEC to obtain the AMEL (assuming one sample per month). Therefore, this Order contains a final AMEL and MDEL for carbon tetrachloride of 7.5 µg/L and 11 µg/L, respectively, based on treatment plant performance.

(d) **Plant Performance and Attainability.** The effluent limitations established in this Order for carbon tetrachloride are based on the performance of the treatment system. The Central Valley Water Board concludes, therefore, that immediate compliance with these effluent limitations is feasible.

iv. Chlorine Residual

(a) WQO. USEPA developed NAWQC for protection of freshwater aquatic life for chlorine residual. The recommended 4-day average (chronic) and 1-hour average (acute) criteria for chlorine residual are 0.011 µg/L and 0.019 µg/L, respectively. These criteria are protective of the Basin Plan's narrative toxicity objective.

(b) RPA Results. The Discharger uses chlorine for disinfection, which is extremely toxic to aquatic organisms. Due to the existing chlorine use and the potential for chlorine to be discharged, the discharge has a reasonable potential to cause or contribute to an in-stream excursion above the NAWQC.

(c) WQBELs. The TSD contains statistical methods for converting chronic (4-day) and acute (1-hour) aquatic life criteria to average monthly and maximum daily effluent limitations based on the variability of the existing data and the expected frequency of monitoring. However, because chlorine is an acutely toxic constituent that can and will be monitored continuously, an average 1-hour limitation is considered more appropriate than an average daily limitation. This Order contains a 4-day average effluent limitation and 1-hour average effluent limitation for chlorine residual of 0.011 µg/L and 0.019 µg/L, respectively, based on USEPA's NAWQC, which implements the Basin Plan's narrative toxicity objective for protection of aquatic life.

(d) Plant Performance and Attainability. Prior to discharging, the Discharger dechlorinates the treated effluent using sulfur dioxide. The Central Valley Water Board concludes, therefore, that compliance with chlorine residual effluent limitations is feasible.

v. Copper

(a) WQO. The CTR includes hardness dependent criteria for the protection of freshwater aquatic life for copper. Using the default conversion factors and reasonable worst-case measured hardness, as described in section IV.C.2.e of this Fact Sheet, the applicable acute (1-hour average) and chronic (4-day average) criteria for the effluent are 14 µg/L and 9.4 µg/L, respectively, as total recoverable. Using the default conversion factors and reasonable worst-case measured hardness, as described in section IV.C.2.e of this Fact Sheet, the applicable acute (1-hour average) and chronic (4-day average) criteria for the receiving water are 4.2 µg/L and 3.1 µg/L, respectively, as total recoverable.

(b) RPA Results. The MEC for copper was 14 µg/L (as total recoverable) while the maximum observed upstream receiving water concentration was 1.4 µg/L (as total recoverable). Therefore, copper in the discharge has a reasonable potential to cause or contribute to an in-stream excursion above the CTR criterion for the protection of freshwater aquatic life.

(c) WQBELs. Dilution credits are not allowed for the development of WQBELs based on aquatic life criteria, as discussed further in section IV.C.2.c of this Fact Sheet. This Order contains a final AMEL and MDEL for copper of 8.7 µg/L and 12 µg/L, respectively, based on the CTR criterion for the protection of freshwater aquatic life.

(d) Plant Performance and Attainability. Analysis of the effluent data shows that the MEC of 14 µg/L is greater than the applicable WQBELs. TSO No. R5-2011-0056 provides a compliance schedule to achieve compliance with the final effluent limitations for copper by 31 December 2012. The Discharger submitted a 22 November 2011 *Linda County Water District Wastewater Treatment Plant Infeasibility Analysis* (Larry Walker Associates) requesting additional time to comply with the final effluent limitations for copper. Therefore, a compliance time schedule for compliance with the

copper effluent limitations is established in TSO No. R5-2011-0056-01 (as amended by Order No. R5-2012-XXXX), with compliance with final effluent limitations required by **1 June 2015**, in accordance with Water Code section 13300, that requires preparation and implementation of a pollution prevention plan in compliance with Water Code section 13263.3.

vi. Diazinon and Chlorpyrifos

(a) WQO. The Feather River was previously identified on the 303(d) list as an impaired water body due to elevated concentrations of diazinon and chlorpyrifos. The Central Valley Water Board completed a TMDL for diazinon and chlorpyrifos in the Sacramento and Feather Rivers and amended the Basin Plan to include water quality objectives and waste load allocations. The Basin Plan Amendment for the Control of Diazinon and Chlorpyrifos Runoff into the Sacramento and Feather Rivers was adopted by the Central Valley Water Board on 3 May 2007 and was approved by the State Water Board on 19 February 2008. The Basin Plan amendment was approved by the Office of Administrative Law on 12 May 2008 and is now State law. The amendment was approved by USEPA and went into effect on 11 August 2008.

The amendment "*…modifies Basin Plan Chapter III (Water Quality Objectives) to revise the site-specific numeric objective for diazinon and establish site-specific numeric objectives for chlorpyrifos in the Sacramento and Feather Rivers.*" The amendment also "*…identifies the requirement to meet the additive formula already in Basin Plan Chapter IV (Implementation), for the additive toxicity of diazinon and chlorpyrifos.*"

The amendment provides that: "*The Waste Load Allocations (WLA) for all NPDES-permitted dischargers… shall not exceed the sum (S) of one (1) as defined below.*

$$S = \frac{C_D}{WQO_D} + \frac{C_C}{WQO_C} \leq 1.0$$

where

C_D = diazinon concentration in µg/L of point source discharge..

C_C = chlorpyrifos concentration in µg/L of point source discharge..

WQO_D = acute or chronic diazinon water quality objective in µg/L

WQO_C = acute or chronic chlorpyrifos water quality objective in µg/L

Available samples collected within the applicable averaging period for the water quality objective will be used to determine compliance with the allocations and loading capacity. Prior to performing any averaging calculations, only chlorpyrifos and diazinon results from the same sample will be used in calculating the sum (S). For purposes of calculating the sum (S) above, analytical results that are reported as "non-detectable" concentrations are considered to be zero."

(b) RPA Results. Diazinon was not detected in the effluent, based on 31 samples collected between May 2008 and April 2011. Effluent monitoring data for chlorpyrifos is not available. However, the waste load allocation applies to all NPDES dischargers to the Feather River.

(c) WQBELs. An AMEL and MDEL have been calculated using the procedures in Section 1.4 of the SIP and consistent with the TMDL waste load allocation resulting in the following effluent limits for chlorpyrifos and diazinon.

Average Monthly Effluent Limitation

$$S_{AMEL} = \frac{C_{D-avg}}{0.079} + \frac{C_{C-avg}}{0.012} \leq 1.0$$

$C_{D\text{-}avg}$ = average monthly diazinon effluent concentration in µg/L

$C_{C\text{-}avg}$ = average monthly chlorpyrifos effluent concentration in µg/L

Maximum Daily Effluent Limitation

$$S_{MDEL} = \frac{C_{D-max}}{0.16} + \frac{C_{C-max}}{0.025} \leq 1.0$$

$C_{D\text{-}max}$ = maximum daily diazinon effluent concentration in µg/L

$C_{C\text{-}max}$ = maximum daily chlorpyrifos effluent concentration in µg/L

(d) Plant Performance and Attainability. Diazinon was not detected in the effluent. Although effluent monitoring data for chlorpyrifos is not available, it is not expected to be present in the discharge from the Facility. The Central Valley Water Board concludes, therefore, that immediate compliance with these effluent limitations is feasible.

vii. Dichlorobromomethane

(a) WQO. The CTR includes a criterion of 0.56 µg/L for dichlorobromomethane for the protection of human health for waters from which both water and organisms are consumed.

(b) RPA Results. The MEC for dichlorobromomethane was 0.9 µg/L while dichlorobromomethane was not detected in the upstream receiving water. Therefore, dichlorobromomethane in the discharge has a reasonable potential to cause or contribute to an in-stream excursion above the CTR criterion for the protection of human health.

(c) WQBELs. As described further in section IV.C.2.c of this Fact Sheet, assimilative capacity is available and a dilution credit of 347 is appropriate for calculating effluent limitations for dichlorobromomethane. Following the procedures established by the SIP for calculating WQBELs and applying a dilution credit of 347 to the CTR criterion, the resulting

AMEL and MDEL for dichlorobromomethane are 139 µg/L and 253 µg/L, respectively. However, effluent limitations may only be as high as is justified under State and federal antidegradation policies. Therefore, this Order establishes performance-based effluent limitations for dichlorobromomethane.

The initial two effluent samples of dichlorobromomethane are around 10 µg/L versus less than 2 µg/L for the former plant from 31 July 2007 to the switch over to the recently upgraded plant. The Central Valley Water Board cannot issue a Time Schedule Order for dichlorobromomethane because the proposed limits are not "new or more stringent" per CWC section 13385 than the final effluent limits in Order R5-2006-0096, which the Discharger was able to previously comply with. However, limiting the Discharger by using performance based limits from the former plant's dichlorobromomethane data is not appropriate in light of the effluent samples collected from the upgraded plant. Therefore, this Order includes interim effluent limitations using the limited startup data set and allowing the Discharger two years to collect a more robust data set to determine a more refined performance limit.

In developing the performance-based MDEL, when there are less than 10 sampling data points available, the *Technical Support Document for Water Quality- Based Toxics Control* ((EPA/505/2-90-001), TSD) recommends a coefficient of variation of 0.6 be utilized as representative of wastewater effluent sampling. The TSD recognizes that a minimum of 10 data points is necessary to conduct a valid statistical analysis. The multipliers contained in Table 5-2 of the TSD are used to determine a maximum daily limitation based on a long-term average objective. In this case, the long-term average objective is to maintain, at a minimum, the current plant performance level. Therefore, when there are less than 10 sampling points for a constituent, interim limitations are based on 3.11 times the maximum observed effluent concentration to obtain the daily

maximum interim limitation and 2.13 times the maximum observed effluent concentration to obtain the average monthly interim limitation (TSD, Table 5-2). Based on a maximum observed effluent concentration of 10.2 µg/L the daily maximum interim limitation is 32 µg/L and the average monthly interim limitation is 22 µg/L.

(d) **Plant Performance and Attainability.** The effluent limitations established in this Order for dichlorobromomethane are based on the performance of the new treatment system. The Central Valley Water Board concludes, therefore, that immediate compliance with these effluent limitations is feasible.

viii. Manganese

(a) **WQO.** The Secondary MCL - Consumer Acceptance Limit for manganese is 50 µg/L, which is used to implement the Basin Plan's chemical constituent objective for the protection of municipal and domestic supply.

(b) **RPA Results.** Secondary MCLs are drinking water standards contained in Title 22 of the California Code of Regulations. Title 22 requires compliance with these standards on an annual average basis, when sampling at least quarterly. Manganese is not a priority pollutant and the RPA procedures in section 1.3 of the SIP are not required. To be consistent with how compliance with the standards is determined, the RPA was conducted based on the calendar annual average manganese concentrations. The maximum calendar annual average effluent concentration for manganese was 75 µg/L. Receiving water monitoring for manganese was not conducted during the term of Order No. R5-2006-0096; however, based on 12 upstream receiving water samples collected between January 2002 and December 2002, the upstream receiving water manganese concentration ranged from non-detect to 75 mg/L, with an average concentration of 31 mg/L. Therefore, manganese in the

discharge has a reasonable potential to cause or contribute to an in-stream excursion above the Secondary MCL.

(c) **WQBELs.** Since it is necessary to determine compliance on an annual average basis, it is impracticable to calculate average weekly and average monthly effluent limitations. This Order contains a final calendar annual average effluent limitation for manganese based on the Secondary MCL. As described further in section IV.C.2.c of this Fact Sheet, assimilative capacity is available and a dilution credit of 347 is appropriate for calculating effluent limitations for manganese. Applying a dilution credit of 347 to the Secondary MCL, the resulting annual average effluent limitation for manganese is 6,643 µg/L. However, effluent limitations may only be as high as is justified under State and federal antidegradation policies. Therefore, this Order establishes performance-based effluent limitations for manganese. The performance-based annual average effluent limitation is established as the maximum observed annual average for a calendar year, which was 75 µg/L.

(d) **Plant Performance and Attainability.** The effluent limitation established in this Order for manganese is based on the performance of the treatment system. The Central Valley Water Board concludes, therefore, that immediate compliance with this effluent limitation is feasible.

ix. Mercury

(a) **WQO.** The current NAWQC for protection of freshwater aquatic life, continuous concentration, for mercury is 0.77 µg/L (30-day average, chronic criteria). The CTR contains a human health criterion (based on a threshold dose level causing neurological effects in infants) of 0.050 µg/L for waters from which both water and aquatic organisms are consumed. Both values are controversial and subject to change. In 40 CFR Part 131, USEPA acknowledges that the human health criteria may not be protective of some aquatic or endangered species and that

"*…more stringent mercury limits may be determined and implemented through use of the State's narrative criterion.*" In the CTR, USEPA reserved the mercury criteria for freshwater and aquatic life and may adopt new criteria at a later date.

(b) RPA Results. The MEC for mercury was 0.035 µg/L. Mercury bioaccumulates in fish tissue and, therefore, the discharge of mercury to the receiving water may contribute to exceedances of the narrative toxicity objective and impact beneficial uses. The Feather River has been listed as an impaired water body pursuant to CWA section 303(d) because of mercury and the discharge must not cause or contribute to increased mercury levels.

(c) WQBELs. This Order contains a performance-based mass effluent limitations for mercury for the effluent discharged to the receiving water. These limitations are based on maintaining the mercury loading at levels achievable by the existing Facility, upgraded and expanded Facility, and regionalized Facility until a TMDL can be established and USEPA develops mercury standards that are protective of human health. The mass limitations for the existing treatment plant and the upgraded and expanded treatment plant are retained from Order No. R5-2006-0096 and do not allow for an increase in mass loading with the expansion to 5.0 MGD. The mass limit, which is applicable to the existing treatment plant and upgraded and expanded treatment plant, was derived using the maximum observed effluent mercury concentration of 0.035 µg/L and the design average dry weather flow of the existing treatment plant (1.8 MGD), as shown below:

Mass Loading from the Existing Treatment Plant and the Upgraded and Expanded Treatment Plant

0.000035 mg/L * 1.8 MGD * 8.34 (conversion factor) * [365 days / 12 months] = 0.016 lbs/month

When the regionalization project is complete, the Facility will receive additional mercury mass loading from the City of Marysville. As reported in the Discharger's Antidegradation Analysis, the MEC for mercury in the effluent from the City of Marysville is 0.019 µg/L. Based on the MEC for the City of Marysville and a flow rate of 1.7 MGD, the additional loading from the City of Marysville will be 0.0082 lbs/month, as shown below:

Mass Loading from the City of Marysville

0.000027 mg/L * 1.7 MGD * 8.34 (conversion factor) * [365 days / 12 months] = 0.0116 lbs/month (rounded up to 0.012 lbs/month)

Therefore, this Order contains a performance-based effluent limitation for the regionalized treatment plant of 0.028 lbs/month, which represents the sum of the mass loading from the upgraded and expanded treatment plant (0.016 lbs/month) and the mass loading from the City of Marysville (0.012 lbs/month).

If USEPA develops new water quality standards for mercury, this permit may be reopened and the effluent limitations adjusted.

(d) Plant Performance and Attainability. The mass limitations for mercury are based on the performance of the treatment system. The Central Valley Water Board concludes, therefore, that immediate compliance with these effluent limitations is feasible.

x. Methylene Blue Active Substances

(a) WQO. The Secondary MCL - Consumer Acceptance Limit for methylene blue active substances is 500 µg/L, which is used to implement the Basin Plan's chemical constituent objective for the protection of municipal and domestic supply.

(b) **RPA Results.** Secondary MCLs are drinking water standards contained in Title 22 of the California Code of Regulations. Title 22 requires compliance with these standards on an annual average basis, when sampling at least quarterly. Methylene blue active substances is not a priority pollutant and the RPA procedures in section 1.3 of the SIP are not required. To be consistent with how compliance with the standards is determined, the RPA was conducted based on the calendar annual average methylene blue active substances concentrations. The maximum calendar annual average effluent concentration for methylene blue active substances was 860 µg/L. Methylene blue active substances was not detected in the upstream receiving water. Therefore, methylene blue active substances in the discharge has a reasonable potential to cause or contribute to an in-stream excursion above the Secondary MCL.

(c) **WQBELs.** Since it is necessary to determine compliance on an annual average basis, it is impracticable to calculate average weekly and average monthly effluent limitations. This Order contains a final calendar annual average effluent limitation for methylene blue active substances based on the Secondary MCL. As described further in section IV.C.2.c of this Fact Sheet, assimilative capacity is available and a dilution credit of 347 is appropriate for calculating effluent limitations for methylene blue active substances. Applying a dilution credit of 347 to the Secondary MCL, the resulting annual average effluent limitation for methylene blue activated substances is 139,300 µg/L. However, effluent limitations may only be as high as is justified under State and federal antidegradation policies. Therefore, this Order establishes performance-based effluent limitations for methylene blue active substances. A performance-based annual average effluent limitation was calculated using the maximum observed annual average for a calendar year, which was 860 µg/L. However, this value is based on only two effluent samples from July 2009 and October 2010. Based on the limited dataset for methylene blue active substances, it is uncertain whether the Facility will be able to comply with this limitation.

Therefore, the performance-based effluent limitation for methylene blue active substances from Order No. R5-2006-0096, which is less stringent than the performance-based effluent limitation calculated above, is retained in this Order. Therefore, consistent with Order No. R5-2006-0096, this Order includes an annual average effluent limitation of 30,000 µg/L for methylene blue active substances.

(d) Plant Performance and Attainability. The effluent limitation established in this Order for methylene blue active substances is based on the performance of the treatment system. The Central Valley Water Board concludes, therefore, that immediate compliance with this effluent limitation is feasible.

xi. Nitrate and Nitrite

(a) WQO. DPH has adopted Primary MCLs for the protection of human health for nitrite and nitrate that are equal to 1 mg/L and 10 mg/L (measured as nitrogen), respectively. DPH has also adopted a primary MCL of 10,000 µg/L for the sum of nitrate plus nitrite, measured as nitrogen.

USEPA has developed a Primary MCL and an MCL goal of 1,000 µg/L for nitrite (as nitrogen). For nitrate, USEPA has developed Drinking Water Standards (10,000 µg/L as Primary MCL) and NAWQC for protection of human health (10,000 µg/L for non-cancer health effects). Recent toxicity studies have indicated a possibility that nitrate is toxic to aquatic organisms.

(b) RPA Results. Untreated domestic wastewater contains ammonia. Nitrification is a biological process that converts ammonia to nitrite and nitrite to nitrate. Denitrification is a process that converts nitrate to nitrite or nitric oxide and then to nitrous oxide or nitrogen gas, which is then released to the atmosphere. Nitrate and nitrite are known to cause

adverse health effects in humans. Inadequate or incomplete denitrification may result in the discharge of nitrate and/or nitrite to the receiving stream. The conversion of ammonia to nitrites and the conversion of nitrites to nitrates present a reasonable potential for the discharge to cause or contribute to an in-stream excursion above the Primary MCLs for nitrite and nitrate.

(c) **WQBELs.** This Order contains a final AMEL for nitrite of 1 mg/L and an AMEL for the sum of nitrate plus nitrite of 10 mg/L, based on the protection of the Basin Plan's narrative chemical constituents objective and to assure the treatment process adequately nitrifies and denitrifies the waste stream.

(d) **Plant Performance and Attainability.** TSO No. R5-2011-0056 provides a compliance schedule to achieve compliance with the final effluent limitations for nitrite by 31 December 2012. Consistent with TSO No. R5-2011-0056, a compliance time schedule for compliance with the nitrite effluent limitations is established in TSO No. R5-2011-0056-01 (as amended by Order No. R5-2012-XXXX), with compliance with final effluent limitations required by 31 December 2012, in accordance with Water Code section 13300, that requires preparation and implementation of a pollution prevention plan in compliance with Water Code section 13263.3.

xii. Pathogens

(a) **WQO.** DPH has developed reclamation criteria, CCR, Division 4, Chapter 3 (Title 22), for the reuse of wastewater. Title 22 requires that for spray irrigation of food crops, parks, playgrounds, schoolyards, and other areas of similar public access, wastewater be adequately disinfected, oxidized, clarified, and filtered, and that the effluent total coliform levels not exceed 2.2 MPN/100 mL as a 7-day median. As coliform organisms are living and mobile, it is impracticable to quantify an exact number of coliform organisms and to establish weekly average limitations. Instead, coliform

organisms are measured as a most probable number and regulated based on a 7-day median limitation.

Title 22 also requires that recycled water used as a source of water supply for non-restricted recreational impoundments be disinfected tertiary recycled water that has been subjected to conventional treatment. A non-restricted recreational impoundment is defined as *"…an impoundment of recycled water, in which no limitations are imposed on body-contact water recreational activities."* Title 22 is not directly applicable to surface waters; however, the Central Valley Water Board finds that it is appropriate to apply an equivalent level of treatment to that required by DPH reclamation criteria because the receiving water is used for irrigation of agricultural land and for contact recreation purposes. The stringent disinfection criteria of Title 22 are appropriate since the undiluted effluent may be used for the irrigation of food crops and/or for body-contact water recreation. Coliform organisms are intended as an indicator of the effectiveness of the entire treatment train and the effectiveness of removing other pathogens.

(b) RPA Results. The beneficial uses of the Feather River include municipal and domestic supply, water contact recreation, and agricultural irrigation supply. To protect these beneficial uses, the Central Valley Water Board finds that the wastewater must be disinfected and adequately treated to prevent disease. The method of treatment is not prescribed by this Order; however, wastewater must be treated to a level equivalent to that recommended by DPH.

(c) WQBELs. In accordance with the requirements of Title 22, this Order includes effluent limitations for total coliform organisms of 2.2 MPN/100 mL as a 7-day median; 23 MPN/100 mL, not to be exceeded more than once in a 30-day period; and 240 MPN/100 mL as an instantaneous maximum.

In addition to coliform limitations, an operational specification for turbidity has been included to monitor the effectiveness of treatment filter performance. Higher effluent turbidity measurements do not necessarily indicate that the effluent discharge exceeds the water quality criteria/objectives for pathogens (i.e., bacteria, parasites, and viruses), which are the principal infectious agents that may be present in raw sewage. Since turbidity is not a valid indicator parameter for pathogens, the turbidity limitations in the previous Order No. R5-2006-0096 are not imposed to protect the receiving water from excess turbidity. The former turbidity limitations were not technology-based effluent limitations or WQBELs for either pathogens or turbidity. WQBELs for turbidity are not required because the effluent does not have a reasonable potential to cause or contribute to an exceedance of the applicable water quality objectives for turbidity.

The tertiary treatment process, or equivalent, is capable of reliably treating wastewater to a turbidity level of 2 nephelometric turbidity units (NTU) as a daily average. Failure of the filtration system such that virus removal is impaired would normally result in increased particles in the effluent, which result in higher effluent turbidity. Turbidity has a major advantage for monitoring filter performance. Coliform testing, by comparison, is not conducted continuously and requires several hours, to days, to identify high coliform concentrations. Therefore, to ensure compliance with the DPH recommended Title 22 disinfection criteria, weekly average specifications are impracticable for turbidity. This Order includes operational specifications for turbidity of 2 NTU as a daily average; 5 NTU, not to be exceeded more than 5 percent of the time within a 24-hour period; and 10 NTU as an instantaneous maximum.

Final WQBELs for BOD_5 and TSS are based on the technical capability of the tertiary process, which is necessary to protect the beneficial uses of the receiving water. BOD_5 is a measure of the amount of oxygen

used in the biochemical oxidation of organic matter. The tertiary treatment standards for BOD_5 and TSS are indicators of the effectiveness of the tertiary treatment process. The principal design parameter for wastewater treatment plants is the daily BOD_5 and TSS loading rates and the corresponding removal rate of the system. The application of tertiary treatment processes results in the ability to achieve lower levels for BOD_5 and TSS than the secondary standards currently prescribed. Therefore, this Order requires AMELs for BOD_5 and TSS of 10 mg/L, which is technically based on the capability of a tertiary system. In addition to the average weekly and average monthly effluent limitations, an MDEL for BOD_5 and TSS is included in the Order to ensure that the treatment works are not organically overloaded and operate in accordance with design capabilities.

This Order contains effluent limitations and requires a tertiary level of treatment, or equivalent, necessary to protect the beneficial uses of the receiving water. The Central Valley Water Board has previously considered the factors in Water Code section 13241 in establishing these requirements.

(d) Plant Performance and Attainability. TSO No. R5-2011-0056 provides a compliance schedule to achieve compliance with the final effluent limitations for BOD_5, TSS, and total coliform organisms by 31 December 2012. Consistent with TSO No. R5-2011-0056, a compliance time schedule for compliance with the BOD_5, TSS, and total coliform organisms effluent limitations is established in TSO No. R5-2011-0056-01 (as amended by Order No. R5-2012-XXXX), with compliance with final effluent limitations required by 31 December 2012, in accordance with Water Code section 13300, that requires preparation and implementation of a pollution prevention plan in compliance with Water Code section 13263.3.

xiii.pH

(a) WQO. The Basin Plan includes a water quality objective for surface waters (except for Goose Lake) that the *"…pH shall not be depressed below 6.5 nor raised above 8.5. Changes in normal ambient pH levels shall not exceed 0.5 in fresh waters with designated COLD or WARM beneficial uses."*

(b) RPA Results. The discharge of municipal wastewater has a reasonable potential to cause or contribute to an excursion above the Basin Plan's numeric objectives for pH. The Discharger monitored daily pH levels in the effluent. In Order No. R5-2006-0096, the maximum permitted pH effluent limitation was reduced from 8.5 to 8.0 after the Discharger provided documentation demonstrating that historical effluent pH has not exceeded 8.0. Based on 1,063 pH samples taken from May 2008 through April 2011, the maximum pH level reported was 7.6 and the minimum was 6.5.

WQBELs. Effluent limitations for pH of 6.5 as an instantaneous minimum and 8.0 as an instantaneous maximum are included in this Order for Discharge Point No. 001 based on protection of the Basin Plan objectives for pH. These are retained from Order No. R5-2006-0096. However, the Discharger requested that the instantaneous minimum be reduced to a pH of 6.0 for the percolation ponds (Discharge Point No. 002) because of the soil beneath the percolation ponds to buffer the lower pH. The reduction in pH will also be minimized by the retention time in the ponds which can increase the pH by the change in temperature, etc.

The startup of upgraded treatment processes at the Facility has caused an immediate lowering of pH in the pond influent. As a result, the Discharger is adding chemical additive to the wastewater solely to comply with the final pH limitation in Order R5-2006-0096 that would typically remain in effect until the effective date of this Order. To cease the

unnecessary additive of chemicals to the wastewater that adds no benefit to water quality, the final instantaneous pH limitations in Section IV.A.1.a, Table 6 of this Order for discharge to the percolation ponds become effective immediately upon Adoption of this Order.

(c) **Plant Performance and Attainability.** Based on 1,063 pH samples taken from May 2008 through April 2011, the maximum pH level reported was 7.6 and the minimum was 6.5. The Central Valley Water Board concludes, therefore, that immediate compliance with these effluent limitations is feasible.

xiv. Salinity

(a) **WQO.** The Basin Plan contains a chemical constituent objective that incorporates state MCLs, contains a narrative objective, and contains numeric water quality objectives for electrical conductivity (EC), TDS, sulfate, and chloride. The Basin Plan also includes a numeric water quality objective for EC in the Feather River. The Basin Plan objectives for EC, TDS, sulfate, and chloride are more limiting than the corresponding USEPA criteria.

Table F-13. Salinity Water Quality Criteria/Objectives

Parameter	Basin Plan Objective	Agricultural WQ Goal[1]	Secondary MCL[2]	Effluent	
				Average	Maximum
EC (µmhos/cm)	150[3]	Varies[4]	900, 1600, 2200	662	877
TDS (mg/L)	N/A	Varies	500, 1000, 1500	402	449
Sulfate (mg/L)	N/A	Varies	250, 500, 600	N/A	N/A
Chloride (mg/L)	N/A	Varies	250, 500, 600	83	85

Parameter	Basin Plan Objective	Agricultural WQ Goal[1]	Secondary MCL[2]	Effluent	
				Average	Maximum

N/A - Not Applicable

[1] Agricultural water quality goals based on *Water Quality for Agriculture*, Food and Agriculture Organization of the United Nations–Irrigation and Drainage Paper No. 29, Rev. 1 (R.S. Ayers and D.W. Westcot, Rome, 1985)

[2] The Secondary MCLs are stated as a recommended level, upper level, and a short-term maximum level.

[3] Shall not exceed 150 micromhos/cm (90 percentile) in well-mixed waters of the Feather River based on a 10-year rolling average.

[4] The EC level in irrigation water that harms crop production depends on the crop type, soil type, irrigation methods, rainfall, and other factors. An EC level of 700 µmhos/cm is generally considered to present no risk of salinity impacts to crops. However, many crops are grown successfully with higher salinities.

(1) Chloride. The Secondary MCL for chloride is 250 mg/L as a recommended level, 500 mg/L as an upper level, and 600 mg/L as a short-term maximum. The recommended agricultural water quality goal for chloride, that would apply the narrative chemical constituent objective, is 106 mg/L as a long-term average based on Water Quality for Agriculture, Food and Agriculture Organization of the United Nations–Irrigation and Drainage Paper No. 29, Rev. 1 (R.S. Ayers and D.W. Westcot, Rome, 1985). The 106 mg/L water quality goal is intended to protect against adverse effects on sensitive crops when irrigated via sprinklers.

(2) Electrical Conductivity. The Basin Plan includes a water quality objective that electrical conductivity (at 25°C) "[s]*hall not exceed 150 micromhos/cm (90 percentile) in well-mixed waters of the Feather River*". The Basin Plan objective for EC is applied as a 10-year rolling average. The Secondary MCL for EC is 900 µmhos/cm as a recommended level, 1600 µmhos/cm as an upper level, and 2200 µmhos/cm as a short-term maximum.

(3) **Sulfate.** The Secondary MCL for sulfate is 250 mg/L as a recommended level, 500 mg/L as an upper level, and 600 mg/L as a short-term maximum.

(4) **Total Dissolved Solids.** The Secondary MCL for TDS is 500 mg/L as a recommended level, 1000 mg/L as an upper level, and 1500 mg/L as a short-term maximum. The recommended agricultural water quality goal for TDS, that would apply the narrative chemical constituent objective, is 450 mg/L as a long-term average based on Water Quality for Agriculture, Food and Agriculture Organization of the United Nations–Irrigation and Drainage Paper No. 29, Rev. 1 (R.S. Ayers and D.W. Westcot, Rome, 1985). Water Quality for Agriculture evaluates the impacts of salinity levels on crop tolerance and yield reduction, and establishes water quality goals that are protective of the agricultural uses. The 450 mg/L water quality goal is intended to prevent reduction in crop yield, i.e. a restriction on use of water, for salt-sensitive crops. Only the most salt sensitive crops require irrigation water of 450 mg/L or less to prevent loss of yield. Most other crops can tolerate higher TDS concentrations without harm, however, as the salinity of the irrigation water increases, more crops are potentially harmed by the TDS, or extra measures must be taken by the farmer to minimize or eliminate any harmful impacts.

(b) RPA Results

(1) **Chloride.** Chloride concentrations in the effluent ranged from 78 mg/L to 85 mg/L, with an average of 83 mg/L. These levels do not exceed the agricultural water goal. Upstream receiving water data for chloride is not available.

(2) **Electrical Conductivity.** A review of the Discharger's monitoring reports shows an average effluent EC of 662 µmhos/cm, with a range from 328 µmhos/cm to 877 µmhos/cm. These levels exceed the Basin Plan

numeric objective for the Feather River. The background receiving water EC averaged 93 µmhos/cm. These data show that some limited assimilative capacity exists in the Feather River for EC.

(3) Sulfate. Effluent and upstream receiving water data for sulfate is not available.

(4) Total Dissolved Solids. The average TDS effluent concentration was 402 mg/L with concentrations ranging from 360 mg/L to 449 mg/L. These levels do not exceed the applicable water quality objectives. The background receiving water TDS is not available.

(c) WQBELs. This Order contains an effluent limitation for salinity based on the Basin Plan objective for EC in the Feather River and consideration of available assimilative capacity.

The maximum 30-day 90th percentile effluent and upstream receiving water EC concentrations between July 2008 and June 2011 were 843 µmhos/cm and 115 µmhos/cm, respectively. Upon completion of the upgrade and expansion project, the Discharger expects the effluent EC to increase due to chemical addition for alkalinity control necessary to maintain a stable biological nitrification/denitrification process, and proposed a limitation of 1,000 µmhos/cm based on the expected performance of the upgraded and expanded treatment system. The human health dilution ratio discussed in section IV.C.2.c is appropriate to use because it applies to criteria that are applicable over longer time periods than the toxicity dilution ratios.

The City of Yuba City WWTP discharge consumes a portion of the EC dilution available in the Feather River. Order No. R5-2007-0134-01 for the City of Yuba City WWTP allows for a discharge up to 10.5 MGD and includes a performance-based AMEL of 1,000 µmhos/cm.

The table below summarizes the projected downstream Feather River EC concentrations using a mass balance equation and EC and flow data for

the Facility, the City of Yuba City WWTP, and the Feather River. At a permitted flow of 1.8 MGD for the existing Facility and an effluent EC of 843 µmhos/cm, the projected downstream EC concentration is 120 µmhos/cm. At a permitted flow of 5.0 MGD for the upgraded and expanded Facility and an effluent EC of 1,000 µmhos/cm, the projected downstream EC concentration is 121 µmhos/cm. At a permitted flow of 6.7 MGD for the regionalized Facility and an effluent EC of 1,000 µmhos/cm, the projected downstream EC concentration is 122 µmhos/cm. Under each of these discharge scenarios, compliance with the Basin Plan EC objective will be achieved.

Table F-14. Feather River EC Concentrations

	Existing Facility (1.8 MGD)	**Upgraded/Expanded Facility (5.0 MGD)**	**Regionalized Facility (6.7 MGD)**
EC_{LC} (µmhos/cm)	843	1,000	1,000
EC_{YC} (µmhos/cm)	1,000	1,000	1,000
$EC_{FR\ Upstream}$ (µmhos/cm)	115	115	115
Q_{LC} (MGD)	1.8	5	6.7
Q_{YC} (MGD)	10.5	10.5	10.5
$Q_{FR\ Upstream}$ (MGD)	2,327	2,327	2,327
$EC_{FR\ Downstream}$[1] (µmhos/cm)	120	121	122

[1] $EC_{FR\ Downstream}=((EC_{LC}Q_{LC})+(EC_{YC}Q_{YC})+(EC_{FR}Q_{FR}))/(Q_{LC}+Q_{YC}+Q_{FR})$, where:

EC_{LC} = Proposed performance-based EC effluent limitation for the Facility

EC_{YC} = Performance-based EC effluent limitation for the City of Yuba City WWTP in Order No. R5-2007-0134-01

$EC_{FR\ Upstream}$ = Maximum observed upstream receiving water 30-day percentile EC concentration

Q_{LC} = Existing and proposed flow limitations for the Facility

Q_{YC} = Flow limitation for the City of Yuba City WWTP in Order No. R5-2007-0134-01

Q_{FR} = Harmonic mean flow of the Feather River

This Order includes an AMEL of 843 µmhos/cm based on treatment plant performance applicable to the discharge from the existing Facility. This Order includes an AMEL of 1,000 µmhos/cm based on the projected

effluent water quality applicable to the discharge from the upgraded and expanded Facility and regionalized Facility.

This Order also requires the Discharger to implement pollution prevention measures to reduce the salinity in its discharge to the Feather River. Specifically, the Special Provision contained in section VI.C.3.a of this Order requires the Discharger to update and implement their 28 October 2009 *Salinity Evaluation and Minimization Plan* (Kennedy/Jenks Consultants) to reduce salinity discharges to the Feather River. Implementation measures to reduce salt loading may include source control, mineralization reduction, chemical addition reductions, changing to water supplies with lower salinity, and limiting the salt load from domestic and industrial dischargers. Compliance with these requirements should result in a salinity reduction in the effluent discharged to the receiving water.

(d) Plant Performance and Attainability. The effluent limitations established in this Order for electrical conductivity are based on the observed performance of the existing treatment system and expected performance of the upgraded and expanded treatment system. The Central Valley Water Board concludes, therefore, that immediate compliance with these effluent limitations is feasible.

4. WQBEL Calculations

a. This Order includes WQBELs for ammonia, BOD_5, bis (2-ethylhexyl) phthalate, carbon tetrachloride, chlorine residual, copper, diazinon and chlorpyrifos, dichlorobromomethane, electrical conductivity, manganese, mercury, methylene blue active substances, pH, nitrite, nitrite plus nitrate, TSS, and total coliform organisms. The general methodology for calculating WQBELs based on the different criteria/objectives is described in subsections IV.C.4.b through e, below. See Attachment H for the WQBEL calculations.

b. **Effluent Concentration Allowance.** For each water quality criterion/objective, the ECA is calculated using the following steady-state mass balance equation from Section 1.4 of the SIP:

$$ECA = C + D(C - B) \quad \text{where } C>B, \text{ and}$$
$$ECA = C \quad \text{where } C \leq B$$

where:

ECA = effluent concentration allowance
D = dilution credit
C = the priority pollutant criterion/objective
B = the ambient background concentration.

According to the SIP, the ambient background concentration (B) in the equation above shall be the observed maximum with the exception that an ECA calculated from a priority pollutant criterion/objective that is intended to protect human health from carcinogenic effects shall use the arithmetic mean concentration of the ambient background samples. For ECAs based on MCLs, which implement the Basin Plan's chemical constituents objective and are applied as annual averages, an arithmetic mean is also used for B due to the long-term basis of the criteria.

c. **Basin Plan Objectives and MCLs.** For WQBELs based on site-specific numeric Basin Plan objectives or MCLs, the effluent limitations are applied directly as the ECA as either an MDEL, AMEL, or average annual effluent limitations, depending on the averaging period of the objective.

d. **Aquatic Toxicity Criteria.** WQBELs based on acute and chronic aquatic toxicity criteria are calculated in accordance with Section 1.4 of the SIP. The ECAs are converted to equivalent long-term averages (i.e., LTA_{acute} and $LTA_{chronic}$) using statistical multipliers and the lowest LTA is used to calculate the AMEL and MDEL using additional statistical multipliers.

e. Human Health Criteria. WQBELs based on human health criteria, are also calculated in accordance with Section 1.4 of the SIP. The ECAs are set equal to the AMEL and a statistical multiplier was used to calculate the MDEL.

$$AMEL = mult_{AMEL}\left[\min\left(\overbrace{M_A ECA_{acute}}^{LTA_{acute}}, M_C ECA_{chronic}\right)\right]$$

$$MDEL = mult_{MDEL}\left[\min\left(M_A ECA_{acute}, \underbrace{M_C ECA_{chronic}}_{LTA_{chronic}}\right)\right]$$

$$MDEL_{HH} = \left(\frac{mult_{MDEL}}{mult_{AMEL}}\right) AMEL_{HH}$$

where:

$mult_{AMEL}$ = statistical multiplier converting minimum LTA to AMEL

$mult_{MDEL}$ = statistical multiplier converting minimum LTA to MDEL

M_A = statistical multiplier converting acute ECA to LTA_{acute}

M_C = statistical multiplier converting chronic ECA to $LTA_{chronic}$

Summary of Water Quality-Based Effluent Limitations

Discharge Point Nos. 001 and 002

Table F-15. Summary of Water Quality-Based Effluent Limitations

Parameter	Units	Effluent Limitations				
		Average Monthly	Average Weekly	Maximum Daily	Instantaneous Minimum	Instantaneous Maximum
Conventional Pollutants						
Biochemical Oxygen Demand (5-day @ 20°C)	mg/L	10	15	20	--	--
	lbs/day[1]	150	225	300	--	--
	lbs/day[2]	420	630	830	--	--
	lbs/day[3]	559	838	1,118	--	--
pH	standard units	--	--	--	6.5 [13]	8.0

Parameter	Units	Effluent Limitations				
		Average Monthly	Average Weekly	Maximum Daily	Instantaneous Minimum	Instantaneous Maximum
Total Suspended Solids	mg/L	10	15	20	--	--
	lbs/day[1]	150	225	300	--	--
	lbs/day[2]	420	630	830	--	--
	lbs/day[3]	559	838	1,118	--	--
Priority Pollutants						
Bis (2-ethylhexyl) Phthalate	µg/L	18	--	24	--	--
Carbon Tetrachloride	µg/L	7.5	--	11	--	--
Copper, Total Recoverable	µg/L	8.7	--	12	--	--
Dichlorobromomethane	µg/L	22	--	32	--	--
Mercury, Total Recoverable	lbs/month[1]	0.016	--	--	--	--
	lbs/month[2]	0.016	--	--	--	--
	lbs/month[3]	0.028	--	--	--	--
Non-Conventional Pollutants						
Ammonia Nitrogen, Total (as N)	mg/L	2.4	--	3.5	--	--
	lbs/day[1]	36	--	53	--	--
	lbs/day[2]	100	--	146	--	--
	lbs/day[3]	134	--	196	--	--
Chlorine, Total Residual	mg/L	--	0.011[4]	0.019[5]	--	--
Diazinon and Chlorpyrifos	µg/L	[6]	--	[7]	--	--
Electrical Conductivity @ 25°C	µmhos/cm	843[8]	--	--	--	--
		1,000[9]	--	--	--	--
Manganese, Total Recoverable	µg/L	75[10]	--	--	--	--
Methylene Blue Active Substances	µg/L	30,000[10]	--	--	--	--
Nitrite Nitrogen, Total (as N)	mg/L	1.0	--	--	--	--
Nitrite Plus Nitrate (as N)	mg/L	10	--	--	--	--

Parameter	Units	Effluent Limitations				
		Average Monthly	Average Weekly	Maximum Daily	Instantaneous Minimum	Instantaneous Maximum
Total Coliform Organisms	MPN/100 mL	--	2.2[11]	23[12]	--	240

[1] Applicable only at Discharge Point No. 002 until 31 December 2012. Based upon an average dry weather treatment design flow of 1.8 MGD.

[2] Applicable at Discharge Point Nos. 001 and 002 after 31 December 2012. Based upon an average dry weather treatment design flow of 5.0 MGD.

[3] Applicable at Discharge Point Nos. 001 and 002 after 31 December 2012. Based upon an average dry weather treatment design flow of 6.7 MGD.

[4] Applied as a 4-day average effluent limitation to Discharge Point No. 001 only.

[5] Applied as a 1-hour average effluent limitation to Discharge Point No. 001 only.

[6] $$S_{AMEL} = \frac{C_{D-avg}}{0.079} + \frac{C_{C-avg}}{0.012} \leq 1.0$$

$C_{D\text{-}avg}$ = average monthly diazinon effluent concentration in µg/L

$C_{C\text{-}avg}$ = average monthly chlorpyrifos effluent concentration in µg/L

[7] $$S_{MDEL} = \frac{C_{D-max}}{0.16} + \frac{C_{C-max}}{0.025} \leq 1.0$$

$C_{D\text{-}max}$ = maximum daily diazinon effluent concentration in µg/L

$C_{C\text{-}max}$ = maximum daily chlorpyrifos effluent concentration in µg/L

[8] Applicable only at Discharge Point No. 002 prior to completion of the Facility upgrades and expansion project.

[9] Applicable only at Discharge Point No. 001 after completion of the Facility upgrades and expansion project.

[10] Applied as an annual average effluent limitation.

[11] Applied as a 7-day median effluent limitation.

[12] Not to be exceeded more than once in any 30-day period.

[13] Instantaneous minimum pH is limited to 6.0 standard units for Discharge Point No. 002 only because of the soil beneath the ponds ability to buffer pH and different environmental factors like temperature change.

5. Whole Effluent Toxicity (WET)

For compliance with the Basin Plan's narrative toxicity objective, this Order requires the Discharger to conduct whole effluent toxicity testing for acute and chronic toxicity, as specified in the Monitoring and Reporting Program (Attachment E section V.). This Order also contains effluent limitations for acute toxicity and requires the

Discharger to implement best management practices to investigate the causes of, and identify corrective actions to reduce or eliminate effluent toxicity.

a. **Acute Aquatic Toxicity.** The Basin Plan contains a narrative toxicity objective that states, "*All waters shall be maintained free of toxic substances in concentrations that produce detrimental physiological responses in human, plant, animal, or aquatic life.*" (Basin Plan at page III-8.00) The Basin Plan also states that, *"…effluent limits based upon acute biotoxicity tests of effluents will be prescribed where appropriate…*". USEPA Region 9 provided guidance for the development of acute toxicity effluent limitations in the absence of numeric water quality objectives for toxicity in its document titled "Guidance for NPDES Permit Issuance", dated February 1994. In section B.2. "Toxicity Requirements" (pgs. 14-15) it states that, "*In the absence of specific numeric water quality objectives for acute and chronic toxicity, the narrative criterion 'no toxics in toxic amounts' applies. Achievement of the narrative criterion, as applied herein, means that ambient waters shall not demonstrate for acute toxicity: 1) less than 90% survival, 50% of the time, based on the monthly median, or 2) less than 70% survival, 10% of the time, based on any monthly median. For chronic toxicity, ambient waters shall not demonstrate a test result of greater than 1 TUc.*" Acute toxicity testing results between August 2008 and December 2010 ranged from 0 percent survival to 100 percent survival. Consistent with Order No. R5-2006-0096, effluent limitations for acute toxicity have been included in this Order as follows:

Acute Toxicity. Survival of aquatic organisms in 96-hour bioassays of undiluted waste shall be no less than:

Minimum for any one bioassay----------	70%
Median for any three consecutive bioassays ----------	90%

b. **Chronic Aquatic Toxicity.** The Basin Plan contains a narrative toxicity objective that states, "*All waters shall be maintained free of toxic substances in concentrations that produce detrimental physiological responses in human, plant,*

animal, or aquatic life." (Basin Plan at page III-8.00) Order No. R5-2006-0096 required quarterly chronic toxicity testing when discharging to the Feather River at Discharge Point No. 001. However, the Discharger has not yet commenced discharges to the Feather River at Discharge Point No. 001, and thus has not conducted chronic toxicity testing. The Discharger did not conduct chronic WET testing during the term of Order No. R5-2006-0096. Therefore, adequate chronic WET data is not available to determine if the discharge has reasonable potential to cause or contribute to an in-stream excursion above the Basin Plan's narrative toxicity objective.

The Discharger plans to commence discharges to the Feather River at Discharge Point No. 001 upon completion of the current upgrade and expansion project in December 2012. The Monitoring and Reporting Program of this Order retains quarterly chronic WET monitoring for discharges to the Feather River at Discharge Point No. 001 for demonstration of compliance with the narrative toxicity objective. This Order includes a reopener to establish an effluent limitation for chronic toxicity if chronic toxicity testing indicates reasonable potential to cause or contribute to an exceedance of the Basin Plan's narrative toxicity objective.

In addition to WET monitoring, the Special Provision in section VI.C.2.a of the Order requires the Discharger to submit to the Central Valley Water Board an Initial Investigative Toxicity Reduction Evaluation (TRE) Workplan for approval by the Executive Officer, to ensure the Discharger has a plan to immediately move forward with the initial tiers of a TRE, in the event effluent toxicity is encountered in the future. The provision also includes a numeric toxicity monitoring trigger, requirements for accelerated monitoring, and requirements for TRE initiation if toxicity is demonstrated.

Numeric chronic WET effluent limitations have not been included in this Order. The SIP contains implementation gaps regarding the appropriate form and implementation of chronic toxicity limits. This has resulted in the petitioning of a

NPDES permit in the Los Angeles Region[1] that contained numeric chronic toxicity effluent limitations. To address the petition, the State Water Board adopted WQO 2003-012 directing its staff to revise the toxicity control provisions in the SIP. The State Water Board states the following in WQO 2003-012, "*In reviewing this petition and receiving comments from numerous interested persons on the propriety of including numeric effluent limitations for chronic toxicity in NPDES permits for publicly-owned treatment works that discharge to inland waters, we have determined that this issue should be considered in a regulatory setting, in order to allow for full public discussion and deliberation. We intend to modify the SIP to specifically address the issue. We anticipate that review will occur within the next year. We therefore decline to make a determination here regarding the propriety of the final numeric effluent limitations for chronic toxicity contained in these permits."* The process to revise the SIP is currently underway. Proposed changes include clarifying the appropriate form of effluent toxicity limits in NPDES permits and general expansion and standardization of toxicity control implementation related to the NPDES permitting process. Since the toxicity control provisions in the SIP are under revision it is infeasible to develop numeric effluent limitations for chronic toxicity. Therefore, this Order requires that the Discharger implement best management practices for compliance with the Basin Plan's narrative toxicity objective, as allowed under 40 CFR 122.44(k).

To ensure compliance with the Basin Plan's narrative toxicity objective, the Discharger is required to conduct chronic WET testing, as specified in the Monitoring and Reporting Program (Attachment E section V.). Furthermore, the

[1] In the Matter of the Review of Own Motion of Waste Discharge Requirements Order Nos. R4-2002-0121 [NPDES No. CA0054011] and R4-2002-0123 [NPDES NO. CA0055119] and Time Schedule Order Nos. R4-2002-0122 and R4-2002-0124 for Los Coyotes and Long Beach Wastewater Reclamation Plants Issued by the California Regional Water Quality Control Board, Los Angeles Region SWRCB/OCC FILES A-1496 AND 1496(a)

Special Provision contained at VI.C.2.a of this Order requires the Discharger to investigate the causes of, and identify and implement corrective actions to reduce or eliminate effluent toxicity. If the discharge demonstrates toxicity exceeding the numeric toxicity monitoring trigger, the Discharger is required to initiate a TRE in accordance with an approved TRE workplan. The numeric toxicity monitoring trigger is not an effluent limitation; it is the toxicity threshold at which the Discharger is required to perform accelerated chronic toxicity monitoring, as well as, the threshold to initiate a TRE if effluent toxicity has been demonstrated.

D. Final Effluent Limitations

1. Mass-based Effluent Limitations

40 CFR 122.45(f)(1) requires effluent limitations be expressed in terms of mass, with some exceptions, and 40 CFR 122.45(f)(2) allows pollutants that are limited in terms of mass to additionally be limited in terms of other units of measurement. This Order includes effluent limitations expressed in terms of mass and concentration for BOD_5, TSS, ammonia, and mercury. In addition, pursuant to the exceptions to mass limitations provided in 40 CFR 122.45(f)(1), some effluent limitations are not expressed in terms of mass, such as pH and temperature, and when the applicable standards are expressed in terms of concentration (e.g., CTR criteria and MCLs) and mass limitations are not necessary to protect the beneficial uses of the receiving water.

Mass-based effluent limitations have been established in this Order for ammonia, BOD_5, and TSS because they are oxygen-demanding substances. Mass-based effluent limitations have been established for mercury because it is a bioaccumulative pollutant and because the Feather River is listed as impaired due to mercury. Mass-based effluent limitations were calculated based upon the permitted average dry weather effluent flow allowed in Section IV.A of the Limitations and Discharge Requirements.

Except for the pollutants listed above, mass-based effluent limitations are not included in this Order for pollutant parameters for which effluent limitations are based on water quality objectives and criteria that are concentration-based.

2. Averaging Periods for Effluent Limitations

40 CFR 122.45 (d) requires average weekly and average monthly discharge limitations for POTWs unless impracticable. However, for toxic pollutants and pollutant parameters in water quality permitting, USEPA recommends the use of a MDEL in lieu of average weekly effluent limitations for two reasons. "*First, the basis for the 7-day average for POTWs derives from the secondary treatment requirements. This basis is not related to the need for assuring achievement of water quality standards. Second, a 7-day average, which could comprise up to seven or more daily samples, could average out peak toxic concentrations and therefore the discharge's potential for causing acute toxic effects would be missed.*" (TSD, pg. 96) This Order uses MDELs in lieu of average weekly effluent limitations for ammonia, bis (2-ethylhexyl) phthalate, carbon tetrachloride, diazinon and chlorpyrifos, copper, and dichlorobromomethane as recommended by the TSD for the achievement of water quality standards and for the protection of the beneficial uses of the receiving stream. Furthermore, for BOD_5, chlorine residual, pH, total coliform organisms, and TSS, weekly average effluent limitations have been replaced or supplemented with effluent limitations utilizing shorter averaging periods. The rationale for using shorter averaging periods for these constituents is discussed in section IV.C.3 of this Fact Sheet.

For effluent limitations for non-priority pollutants based on Primary and Secondary MCLs, except nitrate and nitrite, this Order includes annual average effluent limitations. The Primary and Secondary MCLs are drinking water standards contained in Title 22 of the California Code of Regulations. Title 22 requires compliance with these standards on an annual average basis (except for nitrate and nitrite), when sampling at least quarterly. Since it is necessary to determine compliance on an

annual average basis, it is impracticable to calculate average weekly and average monthly effluent limitations.

3. Satisfaction of Anti-Backsliding Requirements

The CWA specifies that a revised permit may not include effluent limitations that are less stringent than the previous permit unless a less stringent limitation is justified based on exceptions to the anti-backsliding provisions contained in CWA sections 402(o) or 303(d)(4), or, where applicable, 40 CFR 122.44(l).

The effluent limitations in this Order are at least as stringent as the effluent limitations in Order No. R5-2006-0096, with the exception of effluent limitations for aluminum, bis (2-ethylhexyl) phthalate, chloroform, chromium (VI), cis-1,2-dichloroethene, cyanide, dibenzo(a,h)anthracene, EC, iron, lead, manganese, mercury, methoxychlor, methylene blue active substances, oil and grease, persistent chlorinated hydrocarbon pesticides, settleable solids, tetrachloroethene, thiobencarb, turbidity, and zinc. The effluent limitations for these pollutants are less stringent than those in Order No. R5-2006-0096 as described below. This relaxation of effluent limitations is consistent with the anti-backsliding requirements of the CWA and federal regulations.

a. As described in section IV.C.3.b of this Fact Sheet, based on updated information that was not available at the time Order No. R5-2006-0096 was issued, aluminum, chloroform, chromium (VI), cis-1,2-dichloroethene, cyanide, dibenzo(a,h)anthracene, iron, lead, methoxychlor, oil and grease, persistent chlorinated hydrocarbon pesticides, settleable solids, tetrachloroethene, thiobencarb, and zinc do not exhibit reasonable potential to cause or contribute to an exceedance of water quality objectives in the receiving water.

b. Order No. R5-2006-0096 established end-of-pipe effluent limitations for bis (2-ethylhexyl) phthalate and manganese without credit for dilution. As discussed in section IV.C.2.c of this Fact Sheet, a mixing zone and dilution credits for human-health criteria are appropriate, and assimilative capacity is available, based

on updated information that was not available at the time Order No. R5-2006-0096 was adopted, which supports the calculation of less stringent effluent limitations for bis (2-ethylhexyl) phthalate and manganese based on a dilution ratio of 347:1. Because effluent limitations may only be as high as is justified under State and federal antidegradation policies, this Order does not allocate all of the available assimilative capacity and establishes performance-based effluent limitations for these constituents. Additionally, this Order revises the averaging period for manganese from an AMEL to an annual average effluent limitation, based on input from DPH and the fact that MCLs are designed to protect human health over long exposure periods.

c. Order No. R5-2006-0096 established an AMEL of 30 mg/L (i.e., 30,000 µg/L) for methylene blue active substances. This Order revises the averaging period from an AMEL to an annual average effluent limitation, based on input from DPH and the fact that MCLs are designed to protect human health over long exposure periods.

d. Order No. R5-2006-0096 established a performance-based limitation for EC of 780 µmhos/cm as a 30-day 90th percentile. This Order includes less stringent performance-based limitations for EC based on monitoring data for the existing treatment plant collected between July 2008 and June 2011 and the projected effluent quality from the updated and expanded treatment plant, which was not available at the time Order No. R5-2006-0096 was adopted.

e. Order No. R5-2006-0096 established a performance-based mass limitation for mercury of 0.016 lbs/month. This Order retains this mass limitation for discharges from the existing Facility (at 1.8 MGD) and the upgraded and expanded Facility (at 5.0 MGD). As discussed in sections IV.C.3.c and IV.D.4, this Order includes less stringent mass limitations for mercury for the regionalized Facility to address the incremental mass loading from the City of Marysville WWTP.

f. Order No. R5-2006-0096 contained effluent limitations for turbidity. The prior limitations were solely an operational check to ensure the treatment system was functioning properly and could meet the limits for solids and coliform. The prior effluent limitations were not intended to regulate turbidity in the receiving water. Rather, turbidity is an operational parameter to determine proper system functioning and not a WQBEL.

This Order contains performance-based operational turbidity specifications to be met in lieu of effluent limitations. The revised Order does not include effluent limitations for turbidity. However, the performance-based specification in this Order is an equivalent limit that is not less stringent, and therefore does not constitute backsliding.

The revised operational specifications for turbidity are the same as the effluent limitations in Order No. R5-2006-0096. These revisions are consistent with State regulations implementing recycled water requirements. The revision in the turbidity limitation is consistent with the antidegradation provisions of 40 CFR 131.12 and State Water Board Resolution 68-16 because this Order imposes equivalent or more stringent requirements than Order No. R5-2006-0096 and therefore does not allow degradation.

Relaxation and removal of the WQBELs in the previous permit is in accordance with CWA sections 303(d)(4) and 402(o), which allow for the removal of WQBELs for attainment waters where antidegradation requirements are satisfied. Removal of the WQBELs is consistent with the antidegradation provisions of 40 CFR 131.12 and State Water Board Resolution No. 68-16. Therefore, the modifications to these effluent limitations do not violate anti-backsliding requirements.

Order No. R5-2006-0096 established final mass-based effluent limitations for bis (2-ethylhexyl) phthalate, copper, chlorine residual, nitrite, and nitrate plus nitrite. 40 CFR 122.45(f)(1)(ii) states that mass limitations are not required when applicable standards and limitations are expressed in terms of other units of measurement. The numerical effluent limitations for these pollutants established in this Order are

based on water quality standards and objectives, which are expressed in terms of concentration. Pursuant to 40 CFR 122.25(f)(1)(ii), expressing the effluent limitations in terms of concentration is in accordance with Federal Regulations. Compliance with the concentration-based limits will ensure that significantly less mass of the pollutants is discharged to the receiving water. Discontinuing mass-based effluent limitations for these parameters is consistent with the antidegradation provisions of 40 CFR 131.12 and State Water Board Resolution 68-16. Any impact on existing water quality will be insignificant. Therefore, relaxation of effluent limitations is allowed under CWA section 303(d)(4).

4. Satisfaction of Antidegradation Policy

a. Surface Water. Upon adoption of Order No. R5-2006-0096, the Discharger provided secondary treatment for a design average dry weather flow of 1.8 MGD. The Discharger also initiated a project to provide tertiary treatment and to increase the capacity for an average dry weather flow of 5.0 MGD. Order No. R5-2006-0096 specified that once the expansion and upgrade was complete and certified by a Registered Engineer, the Discharger would be authorized to discharge in excess of 1.8 MGD and up to 5 MGD. The upgrade and expansion project is currently under construction and is planned to be completed by December 2012. The Central Valley Water Board found in Order No. R5-2006-0096 that "*The permitted discharge is consistent with the antidegradation provisions of 40 CFR §131.12 and State Water Resources Control Board Resolution 68-16. This Order allows the discharge flow to increase only after the WWTP has been upgraded from secondary to tertiary or equivalent… Compliance with these requirements will result in the use of best practicable treatment or control of the discharge.*" Therefore, an increase in the permitted average dry weather discharge flow from 1.8 MGD to 5.0 MGD was authorized under Order No. R5-2006-0096.

The Discharger requested in the ROWD authorization to discharge up to an average dry weather flow of 6.7 MGD as part of a regionalization project with

the City of Marysville WWTP. The City of Marysville WWTP currently discharges up to 1.7 MGD of secondary treated wastewater to a series of percolation ponds located at the confluence of the Yuba River and the Feather River within the Feather River levee system approximately 2 miles upstream of the Facility. These percolation ponds are protected by levees from only a 10-year flood event. Discharges to the Feather River from the City of Marysville WWTP are not authorized, and WDR Order No. 5-01-071 prohibits the discharge of waste to surface waters and requires the City of Marysville to design, construct, operate, and maintain the facility such that inundation or washout due to flooding from a storm with a 100-year annual return period does not occur. Although discharges to the Feather River from the City of Marysville WWTP are not authorized, during flood events that inundate the percolation ponds, secondary treated wastewater in the percolation ponds is discharged to the Feather River. Additionally, wastewater in the ponds percolates to groundwater, which has been shown to seep into the Feather River. Therefore, the Central Valley Water Board issued Cease and Desist Order (CDO) No. R5-2004-0072 on 4 June 2004, which provided the City of Marysville with a time schedule to make facility improvements and prepare a Feasibility Study and Master Plan Report describing how the wastewater storage and disposal area will be protected from flooding caused by storm events with a 100 year annual return period. The City of Marysville submitted a 27 June 2007 *City of Marysville Feasibility Study and Master Plan Results Report* (Kennedy/Jenks Consultants) which determined that regionalization with the Facility is the preferred alternative. The Central Valley Water Board subsequently adopted CDO No. R5-2008-0110 on 31 July 2008, which provided the City of Marysville with a time schedule to implement the preferred alternative (i.e., regionalization), which was later extended by CDO No. R5-2009-0014.

The Discharger developed a May 2011 *Antidegradation Analysis of Proposed Discharge Modification for the Linda County Water District Wastewater Treatment Plant* (Larry Walker Associates), that provides an antidegradation analysis following the guidance provided by State Water Board APU 90-004. Pursuant to

the guidelines, the Antidegradation Analysis evaluated whether changes in water quality resulting from the proposed increase in discharge to the Feather River (from 5.0 MGD to 6.7 MGD of tertiary treated wastewater) are consistent with the maximum benefit to the people of the State, will not unreasonably affect beneficial uses, will not cause water quality to be less than water quality objectives, and that the discharge provides protection for existing in-stream uses and water quality necessary to protect those uses. Findings from the Antidegradation Analysis are summarized below.

i. **Water quality parameters and beneficial uses which will be affected by the proposed expansion and the extent of the impact.** Compliance with this Order will not adversely impact beneficial uses of the receiving water or downstream receiving waters. All beneficial uses will be maintained and protected. 40 CFR 131.12 defines the following tier designations to describe water quality in the receiving water body.

   Tier 1 Designation: *Existing instream water uses and the level of water quality necessary to protect the existing uses shall be maintained and protected. (40 CFR 131.12)*

   Tier 2 Designation: *Where the quality of waters exceed levels necessary to support propagation of fish, shellfish, and wildlife and recreation in and on the water, that quality shall be maintained and protected unless the State finds, after full satisfaction of the intergovernmental coordination and public participation provisions of the State's continuing planning process, that allowing lower water quality is necessary to accommodate important economic or social development in the area in which the waters are located. In allowing such degradation or lower water quality, the State shall assure water quality adequate to protect existing uses fully. Further, the State shall assure that there shall be achieved the highest statutory and regulatory requirements for all new and existing point sources and all cost-effective and reasonable best management practices for nonpoint source control. (40 CFR 131.12)*

The tier designation is assigned on a pollutant-by-pollutant basis. The Antidegradation Analysis did not delineate the tier designation for pollutants, but instead conducted an analysis of the potential impact of each constituent and their use of assimilative capacity. However, of the constituents evaluated in the Antidegradation Analysis, only mercury is listed on the 2010 303(d) list as impaired. Therefore, the Feather River is considered a Tier 1 receiving water for mercury. The remaining constituents assessed are not included on the 303(d) list as impaired and therefore the Feather River is considered a Tier 2 receiving water for these pollutants.

Based on the Discharger's analysis, the proposed discharge would result in an increase in mass loading, compared with the current condition (i.e., separate discharges of 5.0 MGD of tertiary treated wastewater from the Facility and 1.7 MGD of secondary treated wastewater from the City of Marysville WWTP) for dichlorobromomethane (18 percent), manganese (17 percent), and salinity (4 percent). For all other constituents, the proposed discharge is expected to result in a reduction in mass loading to the Feather River compared to the current condition.

As discussed below, the antidegradation analysis evaluated whether allowance of an increase in manganese, salinity, and dichlorobromomethane concentrations is in the best interest of the people of the State.

ii. Scientific Rationale for Determining Potential Lowering of Water Quality. The rationale used in the Antidegradation Analysis is based on 40 CFR 131.12, USEPA memorandum Regarding Tier 2 Antidegradation Reviews and Significance Thresholds (USEPA 2005), USEPA Region 9 Guidance on Implementing the Antidegradation Provisions of 40 CFR 131.12 (USEPA 1987), State Water Board Resolution No. 68-16, a State Water Board 1987 policy memorandum to the Regional Water Boards, and an Administrative Procedures Update (APU 90-004) issued by the State Water Board to the Regional Water Boards.

The scientific rationale used in the Antidegradation Analysis to determine if the Order allows a lowering of water quality was based on a comparison of the mass loadings to the Feather River under the current condition with loadings from the proposed regionalized Facility. The Antidegradation Analysis analyzed each pollutant detected in the effluent from the Facility and the City of Marysville WWTP to determine if the proposed increase in discharge from 5.0 MGD to 6.7 MGD authorized by this Order potentially allows significant increase of the amount of pollutants present in the upstream and downstream receiving water influenced by the proposed discharge. Pollutants that significantly increase concentration or mass downstream require an alternatives analysis to determine whether implementation of alternatives to the proposed action is in the best socioeconomic interest of the people of the region, and to the maximum benefit of the people of the State. Details on the scientific rationale are discussed in detail in the Antidegradation Analysis.

The Central Valley Water Board concurs with this scientific approach.

iii. **Alternative Control Measures Considered.** Resolution 68-16 requires that degradation of water quality be consistent with maximum benefit to the people of the State. APU 90-004 identifies factors to be considered for regulatory actions "*that, in the Regional Board's judgement* [sic*], will result in a significant increase in pollutant loadings*" (i.e., when a complete antidegradation analysis is required) when determining whether the discharge is necessary to accommodate social or economic development and is consistent with maximum public benefit. The Central Valley Water Board is exercising its judgment to require a complete antidegradation analysis and implementation of feasible alternative control measures which might reduce, eliminate, or compensate for negative impacts.

(a) **Alternative Control Measures.** The City of Marysville prepared a 27 June 2007 *City of Marysville Feasibility Study and Master Plan*

Results Report (Kennedy/Jenks Consultants; hereinafter Feasibility Analysis) that considered several alternatives that would reduce or eliminate the lowering of water quality resulting from the proposed increase in discharge from 5.0 MGD to 6.7 MGD. A number of effluent disposal alternatives were assessed to determine if any alternative would substantially reduce or eliminate the lowering of water quality as a result of the proposed increase in discharge from 5.0 MGD to 6.7 MGD. These alternatives are summarized below.

(1) Year-round discharge to surface water from the City of Marysville WWTP – This alternative would require the City of Marysville to obtain an NPDES permit and comply with stringent water quality standards for the effluent discharge. The discharge would be directly to the Feather River or through the hydrological connection of the City of Marysville's percolation ponds to the Feather River.

(2) Seasonal (wet-weather) direct discharge to surface water and seasonal (dry-weather) land disposal and/or reclamation of tertiary treated effluent from the City of Marysville WWTP – This alternative would require the City of Marysville to obtain an NPDES permit and comply with stringent water quality standards for the wet-weather discharges to the Feather River. This would also require the City of Marysville to acquire new land, construct pumping and transmission facilities, perform groundwater studies to evaluate water quality impacts, and obtain a WDR order. If a hydrological connection is found between the ponds and the Feather River, compliance with an NPDES permit would be required year-round. Reclamation of tertiary treated wastewater would require compliance with Title 17 and 22 of the Water Code and would require an upgrade of the City of Marysville WWTP.

(3) Year-round discharge to the City of Marysville's current percolation ponds – This alternative would require the City of Marysville to obtain

an NPDES permit and comply with stringent water quality standards for the effluent discharge. The City of Marysville would be required to explore the nature of the hydrological connection between the ponds and the Feather River and prepare an antidegradation analysis for discharges to groundwater and/or the Feather River.

(4) Land disposal using relocated percolation ponds outside the 100-year floodplain - This alternative would require the City of Marysville to acquire new land, construct pumping and transmission facilities, perform groundwater studies to evaluate water quality impacts, and obtain a WDR order. If a hydrological connection is found between the ponds and the Feather River, compliance with an NPDES permit would be required year-round.

(5) Regionalization - This alternative would include the City of Marysville sending its raw, screened wastewater to the Facility for treatment and disposal or reuse. The Facility would become a regional wastewater treatment facility.

As discussed further in the Feasibility Analysis, the City of Marysville did not consider Alternatives (2) and (3) to be viable options, and thus did not consider these alternatives further. The City of Marysville evaluated both economic and non-economic factors for the remaining alternatives in detail in the Feasibility Analysis and submitted a summary of costs associated with each alternative, as shown in the following table. Based on comparison of economic and non-economic factors, the City of Marysville concluded that regionalization with the Facility was the preferred alternative.

Table F-16. Summary of Costs for Alternatives Analysis

Alternative	Plan Elements	Capital Cost ($M)	Operation and Maintenance Cost ($M)

Alternative	Plan Elements	Capital Cost ($M)	Operation and Maintenance Cost ($M)
1	Upgrade the City of Marysville's existing WWTP to tertiary treatment. Obtain year-round NPDES permit to discharge to the Feather River with new conveyance and diffuser.	$103	$1.45
4-A	Upgrade the City of Marysville's existing WWTP to tertiary treatment. Obtain year-round WDRs to discharge to newly constructed percolation ponds outside the 100-year floodplain north of Marysville.	$102	$1.33
4-B	Upgrade the City of Marysville's existing WWTP to tertiary treatment. Obtain year-round WDRs to discharge to newly constructed percolation ponds outside the 100-year floodplain in Sutter County.	$112	$1.71
4-C	Upgrade the City of Marysville's existing WWTP to tertiary treatment. Obtain year-round WDRs to discharge to newly constructed percolation ponds outside the 100-year floodplain south of Linda.	$120	$2.0
5	Retain screening and flow measurement at the City of Marysville's existing WWTP. Convey raw wastewater to the Facility for treatment. Construct additional primary, secondary, and tertiary treatment facilities at the Facility	$101	$1.31

(b) Additional Information Considered by the Central Valley Water Board. The Central Valley Water Board adopted Resolution No. R5-2009-0028 in Support of Regionalization, Reclamation, Recycling, and Conservation for Wastewater Treatment Plants on 23 April 2009, which requires the Central Valley Water Board to facilitate opportunities for regionalization and consider innovative permitting options when existing NPDES permit requirements, WDRs, and/or enforcement orders inhibit the ability to implement regionalization. Resolution No. R5-2009-0028 identifies a number of potential benefits to regionalization including the following:

- "*The costs of constructing, expanding, upgrading and maintaining wastewater collection and treatment systems are large, and can be a*

severe impact on small communities and small economically disadvantaged communities. Increased rates on most communities, but especially for the small communities in particular, result in the likelihood of a successful Proposition 218 challenge to rate increases, which may make compliance with regulations and improvements in water quality difficult or impossible for some communities. While the capital investment for regionalization of wastewater collection and treatment systems may result in a higher initial cost of upgrading an existing facility to meet current regulatory requirements, costs associated with meeting future regulatory requirements and system upgrades can be spread over a larger population and will ultimately reduce the per capita costs of wastewater treatment and disposal. Regionalization will also increase the technical and economical feasibility of a higher level of wastewater treatment, allowing the treated water to be a "resource" and not merely a "waste."

Based on the capital, operation and maintenance, and other (e.g., regulatory) costs, the City of Marysville determined that regionalization with the Facility is the preferred alternative.

Furthermore, Resolution No. R5-2009-0028 makes several findings including:

- "*Coordinated management of water supplies and wastewaters on a regional basis must be promoted to achieve efficient utilization of water.*"

- "*Evaluating regionalization, reclamation, recycling and/or conservation opportunities requires a balancing of these and many other considerations, including impacts to water quality, costs, authority to implement and other factors necessary to determine if regionalization, reclamation, recycling and/or conservation are feasible and practicable for the specific facility(ies)*."

- "*Focused, long-range planning is necessary to identify and implement regionalization, reclamation, recycling and/or conservation opportunities. This is a continuing process in that certain projects may not be technically or fiscally feasible at this time, but may become feasible as the community grows, treatment systems are upgraded, or other factors change with time.*"

iv. Socioeconomic Evaluation. The objective of the socioeconomic analysis was to determine if the lowering of water quality in the Feather River is in the maximum interest of the people of the State. For the socioeconomic evaluation, the Central Valley Water Board considered:

(a) The social benefits and costs based on the ability to accommodate socioeconomic development in the *City of Marysville Feasibility Study and Master Plan Results Report*.

(b) The magnitude of the change in water quality from existing conditions, the water quality impacts, and expected effects on beneficial uses of the Feather River.

(c) The feasibility and effectiveness of reducing the lowering of water quality by implementing alternatives to lowering of Feather River water quality.

(d) The economic costs for alternatives and assessed alternative costs against the current project regionalization cost estimate of $101 million.

v. Justification for Allowing Degradation. The Antidegradation Analysis provided the following rationale to justify the proposed increase in discharge to the receiving water:

(a) The proposed regionalization project and associated increase in permitted discharge is necessary as a means to improve wastewater treatment for the City of Marysville, and remove the potential threat that the City of Marysville's existing percolation ponds pose to downstream water quality

and beneficial uses should the ponds overtop during or after a storm event. Failure to approve the increase to allow regionalization, or alternatively requiring the City of Marysville to implement additional control measures beyond the high level of treatment for the regionalized system that would maintain or improve existing water quality and mass emissions in the Feather River, likely would have significant adverse economic and social impacts on the citizens and businesses of Yuba and Sutter counties.

(b) The increase in the Facility flow rate will not adversely affect existing or probable beneficial uses of the Feather River, nor will it cause water quality to fall below applicable water quality objectives. There is minimal effect because the regionalization effectively combines two current discharges and provides increased treatment compared with the existing City of Marysville WWTP.

(c) Although the increased discharge may produce small increases in mass loadings of dichlorobromomethane, manganese, mercury, and salinity, the proposed regionalization project and associated increase in permitted discharge will result in slight to significant reductions in the mass loadings of pollutants as compared to those that would occur if the Facility, which will provide tertiary treatment, and the City of Marysville WWTP, which provides secondary treatment, were operated as separate discharges. The small decrease in water quality with respect to the constituents considered in the analysis is unlikely to affect beneficial uses of the Feather River or downstream receiving water.

(1) Dichlorobromomethane. For dichlorobromomethane, the Antidegradation Analysis estimates an 18 percent increase in loading, and according to the ROWD, dichlorobromomethane concentrations "*…may increase due to the resulting reactive free chlorination occurring with lower ammonia concentrations. However the higher level of treatment may require a*

lower dose of chlorine due to the filtered effluent." As discussed further in sections IV.C.2.c and IV.C.3.c of this Fact Sheet, although assimilative capacity for dichlorobromomethane and a dilution credit of 347 is available, this Order includes more stringent performance-based effluent limitations that correspond to a dilution credit of 5.1:1. This Order includes a reopener to adjust the performance-based effluent limitations if monitoring data from the regionalized Facility indicates that the Facility can comply with a more stringent effluent limitation.

(2) Manganese. For manganese, using the calculation procedures outlined in the Antidegradation Analysis, the proposed discharge would increase the mass loading by 17 percent; however, the Discharger concluded that the actual expected mass loading will be similar to the existing condition due to the diluting effects from the City of Marysville's effluent. As discussed further in sections IV.C.2.c and IV.C.3.c of this Fact Sheet, although assimilative capacity for manganese and a dilution credit of 347 is available, this Order includes more stringent performance-based effluent limitations that correspond to a dilution credit of 1.3:1. This Order includes a reopener to adjust the performance-based effluent limitations and/or the size of the mixing zone if monitoring data from the regionalized Facility indicates that the Facility can comply with a more stringent effluent limitation or if the results of the mixing zone verification study indicate that the discharge is completely mixed at a shorter distance downstream of Discharge Point No. 001.

(3) Mercury. Although the discharge does not exhibit reasonable potential to cause or contribute to an exceedance of the CTR criteria for mercury, as discussed in section IV.C.3.c of this Fact Sheet, this Order retains the performance-based effluent limitation for mercury from Order No. R5-2006-0096 for discharges at 1.7 MGD and 5.0 MGD and only allows for the incremental increase in mass loading from the

City of Marysville upon completion of the regionalization project. The proposed increase in discharge will not significantly lower water quality for mercury in the Feather River relative to the current condition (i.e., separate discharges of 5.0 MGD of tertiary treated wastewater from the Facility and 1.7 MGD of secondary treated wastewater from the City of Marysville WWTP). The Antidegradation Analysis indicates that the enhanced filtration process of the regionalized Facility will result in a small reduction in the mass loading of total mercury to the Feather River through the removal of particulate mercury; therefore, additional mercury removal for the discharge from the City of Marysville may occur. The Antidegradation Analysis concluded that no additional mass of mercury is anticipated to be discharged from the regionalized Facility beyond the sum of the current mass loading from the upgraded and expanded Facility and the City of Marysville WWTP. This Order includes a reopener to adjust the performance-based effluent limitations if monitoring data from the regionalized Facility indicates that the Facility can comply with a more stringent effluent limitation.

(4) Salinity. For salinity, the Antidegradation Analysis converted EC concentrations to TDS concentrations to evaluate the mass loading of salinity. The Antidegradation Analysis estimated a 4 percent increase in TDS loading because, according to the ROWD, "*…nitrification and denitrification are expected to [additionally] increase salinity by approximately 20%, due to chemical addition for alkalinity control necessary to maintain a stable biological nitrification/denitrification process*." Based on the expected increase in salinity associated with the upgrade and expansion project (up to 5.0 MGD), this Order includes a revised performance-based effluent limitation of 1,000 µmhos/cm that is applicable to the discharge from the upgraded and expanded Facility and regionalized Facility. As shown in Table F-13, the projected downstream EC concentration for the upgraded and

expanded Facility compared to that of the regionalized Facility results in a net increase of 1 µmhos/cm in the downstream EC concentration. Thus, the increase in discharge is not expected to significantly impact downstream water quality with respect to salinity. This Order includes a reopener to adjust the performance-based effluent limitations and/or the size of the mixing zone if monitoring data from the regionalized Facility indicates that the Facility can comply with a more stringent effluent limitation or if the results of the mixing zone verification study indicate that the discharge is completely mixed at a shorter distance downstream of Discharge Point No. 001.

b. Groundwater. The Discharger utilizes seven unlined percolation ponds located in the Feather River floodplain. Domestic wastewater contains constituents such as total dissolved solids, electrical conductivity, pathogens, nitrates, organics, metals and oxygen demanding substances. Percolation from the percolation ponds may result in an increase in the concentration of these constituents in groundwater. The increase in the concentration of these constituents in groundwater must be consistent with Resolution No. 68-16. Any increase in pollutant concentrations in groundwater must be shown to be necessary to allow wastewater utility service necessary to accommodate housing and economic expansion in the area and must be consistent with maximum benefit to the people of the State of California. Some degradation of groundwater by the Discharger is consistent with Resolution No. 68-16 provided that:

i. the degradation is limited in extent;

ii. the degradation after effective source control, treatment, and control is limited to waste constituents typically encountered in municipal wastewater as specified in the groundwater limitations in this Order;

iii. the Discharger minimizes the degradation by fully implementing, regularly maintaining, and optimally operating best practicable treatment and control (BPTC) measures; and

iv. the degradation does not result in water quality less than that prescribed in the Basin Plan.

As discussed in section III.E.1 of the Fact Sheet, groundwater monitoring results do not indicate a degradation in groundwater quality when compared to background. Additionally, after completion of the upgrade and expansion project and any necessary construction/improvements to the existing side-bank outfall, the Discharger will discharge tertiary treated wastewater to the ponds only during emergency situations, versus the existing continuous discharge of secondary treated wastewater, which is expected to improve down gradient water quality. This Order includes groundwater limitations specifying that the intermittent discharges to the percolation ponds shall not cause groundwater to contain constituents in concentrations greater than applicable water quality objectives or natural background quality, whichever is greater.

5. Stringency of Requirements for Individual Pollutants

This Order contains both technology-based effluent limitations and WQBELs for individual pollutants. The technology-based effluent limitations consist of restrictions on flow and percent removal requirements for BOD_5 and TSS. The WQBELs consist of restrictions on ammonia, bis (2-ethylhexyl) phthalate, BOD_5, carbon tetrachloride, chlorine residual, copper, diazinon and chlorpyrifos, dichlorobromomethane, electrical conductivity, manganese, mercury, methylene blue active substances, nitrate, nitrite plus nitrate, pH, total coliform organisms, and TSS. This Order's technology-based pollutant restrictions implement the minimum, applicable federal technology-based requirements. In addition, this Order includes effluent limitations for BOD_5, total coliform organisms, and TSS to meet numeric objectives or protect beneficial uses.

WQBELs have been scientifically derived to implement water quality objectives that protect beneficial uses. Both the beneficial uses and the water quality objectives have been approved pursuant to federal law and are the applicable federal water quality standards. To the extent that toxic pollutant WQBELs were derived from the CTR, the CTR is the applicable standard pursuant to 40 CFR 131.38. The scientific

procedures for calculating the individual WQBELs for priority pollutants are based on the CTR-SIP, which was approved by USEPA on 18 May 2000. All beneficial uses and water quality objectives contained in the Basin Plan were approved under state law and submitted to and approved by USEPA prior to 30 May 2000. Any water quality objectives and beneficial uses submitted to USEPA prior to 30 May 2000, but not approved by USEPA before that date, are nonetheless "applicable water quality standards for purposes of the CWA" pursuant to 40 CFR 131.21(c)(1). Collectively, this Order's restrictions on individual pollutants are no more stringent than required to implement the requirements of the CWA.

Summary of Final Effluent Limitations
Discharge Point Nos. 001 and 002

Table F-17. Summary of Final Effluent Limitations

Parameter	Units	Effluent Limitations					
		Average Monthly	Average Weekly	Maximum Daily	Instantaneous Minimum	Instantaneous Maximum	Basis[1]
Flow	MGD	1.8[2]	--	--	--	--	DC
	MGD	5.0[3]	--	--	--	--	
	MGD	6.7[4]	--	--	--	--	
Conventional Pollutants							
Biochemical Oxygen Demand (5-day @ 20°C)	mg/L	10	15	20	--	--	TTC
	lbs/day[2]	150	225	300	--	--	
	lbs/day[3]	420	630	830	--	--	
	lbs/day[4]	559	838	1,118	--	--	
	% Removal	85	--	--	--	--	CFR
pH	standard units	--	--	--	6.5 [14]	8.0	BP, PB
Total Suspended Solids	mg/L	10	15	20	--	--	TTC
	lbs/day[2]	150	225	300	--	--	
	lbs/day[3]	420	630	830	--	--	
	lbs/day[4]	559	838	1,118	--	--	

Parameter	Units	Effluent Limitations					
		Average Monthly	Average Weekly	Maximum Daily	Instantaneous Minimum	Instantaneous Maximum	Basis[1]
	% Removal	85	--	--	--	--	CFR
Priority Pollutants							
Bis (2-ethylhexyl) Phthalate	µg/L	18	--	24	--	--	CTR
Carbon Tetrachloride	µg/L	7.5	--	11	--	--	CTR
Copper, Total Recoverable	µg/L	8.7	--	12	--	--	CTR
Dichlorobromomethane	µg/L	22	--	32	--	--	CTR
Mercury, Total Recoverable	lbs/month[2]	0.016	--	--	--	--	PB
	lbs/month[3]	0.016	--	--	--	--	
	lbs/month[4]	0.028	--	--	--	--	
Non-Conventional Pollutants							
Ammonia Nitrogen, Total (as N)	mg/L	2.4	--	3.5	--	--	NAWQC
	lbs/day[2]	36	--	53	--	--	
	lbs/day[3]	100	--	146	--	--	
	lbs/day[4]	134	--	196			
Chlorine, Total Residual	mg/L	--	0.011[5]	0.019[6]	--	--	NAWQC
Diazinon and Chlorpyrifos	µg/L	[7]	--	[8]	--	--	BP
Electrical Conductivity @ 25°C	µmhos/cm	843[9]	--	--	--	--	PB
		1,000[10]	--	--	--	--	
Manganese, Total Recoverable	µg/L	75[11]	--	--	--	--	SEC MCL, PB
Methylene Blue Active Substances	µg/L	30,000[11]	--	--	--	--	SEC MCL, PB
Nitrite Nitrogen, Total (as N)	mg/L	1.0	--	--	--	--	MCL

Parameter	Units	Effluent Limitations					
		Average Monthly	Average Weekly	Maximum Daily	Instantaneous Minimum	Instantaneous Maximum	Basis[1]
Nitrite Plus Nitrate (as N)	mg/L	10	--	--	--	--	MCL
Total Coliform Organisms	MPN/ 100 mL	--	2.2[12]	23[13]	--	240	Title 22

Parameter	Units	Effluent Limitations					
		Average Monthly	Average Weekly	Maximum Daily	Instantaneous Minimum	Instantaneous Maximum	Basis[1]

[1] DC - Based on the design capacity of the Facility.

TTC - Based on tertiary treatment capability. These effluent limitations reflect the capability of a properly operated tertiary treatment plant.

CFR - Based on secondary treatment standards contained in 40 CFR Part 133.

PB - Based on treatment plant performance.

BP - Based on water quality objectives contained in the Basin Plan.

CTR - Based on water quality criteria contained in the California Toxics Rule and applied as specified in the SIP.

NAWQC - Based on USEPA's National Ambient Water Quality Criteria for the protection of freshwater aquatic life.

MCL - Based on the Primary MCL.

SEC MCL - Based on the Secondary MCL.

Title 22 - Based on DPH Reclamation Criteria, CCR, Division 4, Chapter 3 (Title 22).

[2] Applicable only at Discharge Point No. 002 until 31 December 2012. Based on a design average dry weather flow of 1.8 MGD.

[3] Applicable at Discharge Point Nos. 001 and 002 after 31 December 2012. Based on a design average dry weather flow of 5.0 MGD.

[4] Applicable only at Discharge Point Nos. 001 and 002 after completion of the regionalization project. Based on a design average dry weather flow of 6.7 MGD.

[5] Applied as a 4-day average effluent limitation to Discharge Point No. 001 only.

[6] Applied as a 1-hour average effluent limitation to Discharge Point No. 001 only.

[7] $$S_{AMEL} = \frac{C_{D-avg}}{0.079} + \frac{C_{C-avg}}{0.012} \leq 1.0$$

$C_{D\text{-}avg}$ = average monthly diazinon effluent concentration in µg/L

$C_{C\text{-}avg}$ = average monthly chlorpyrifos effluent concentration in µg/L

[8] $$S_{MDEL} = \frac{C_{D-max}}{0.16} + \frac{C_{C-max}}{0.025} \leq 1.0$$

$C_{D\text{-}max}$ = maximum daily diazinon effluent concentration in µg/L

$C_{C\text{-}max}$ = maximum daily chlorpyrifos effluent concentration in µg/L

[9] Applicable at Discharge Point No. 002 prior to completion of the Facility upgrades and expansion project.

[10] Applicable at Discharge Point Nos. 001 and 002 after completion of the Facility upgrades and expansion project.

[11] Applied as an annual average effluent limitation.

[12] Applied as a 7-day median effluent limitation.

[13] Not to be exceeded more than once in any 30-day period.

[14] Instantaneous minimum pH is limited to 6.0 standard units for Discharge Point No. 002 only because of the soil beneath the ponds ability to buffer pH and different environmental factors like temperature change.

E. Interim Effluent Limitations – Not Applicable

F. Land Discharge Specifications

The land discharge specifications for the percolation ponds are necessary to ensure proper operation of the percolation ponds and to protect the beneficial uses of the groundwater. The specifications included in this Order are retained from Order No. R5-2006-0096.

The Discharger currently discharges at Discharge Point No. 002 to a series of seven percolation ponds that lie within the Feather River floodplain. Order No. R5-2006-0096 required the Discharger to submit a pond closure plan and required closure of the ponds. Upon completion of the upgrade and expansion project, the Discharger plans to discontinue the use of the ponds. However, as the Discharger requested in the ROWD, this Order allows the Discharger to continue to use the ponds in emergency situations following completion of the upgrade and expansion project and any necessary construction/improvements to the existing side-bank outfall.

G. Reclamation Specifications – Not Applicable

V. RATIONALE FOR RECEIVING WATER LIMITATIONS

Basin Plan water quality objectives to protect the beneficial uses of surface water and groundwater include numeric objectives and narrative objectives, including objectives for chemical constituents, toxicity, and tastes and odors. The toxicity objective requires that surface water and groundwater be maintained free of toxic substances in concentrations that produce detrimental physiological responses in humans, plants, animals, or aquatic life. The chemical constituent objective requires that surface water and groundwater shall not contain chemical constituents in concentrations that adversely affect any beneficial use or that exceed the MCLs in Title 22, CCR. The tastes and odors objective states that surface water and groundwater shall not contain taste- or odor-producing substances in concentrations that cause nuisance or adversely affect beneficial uses. The Basin Plan requires the application of the most stringent objective necessary to ensure that surface

water and groundwater do not contain chemical constituents, toxic substances, radionuclides, or taste and odor producing substances in concentrations that adversely affect domestic drinking water supply, agricultural supply, or any other beneficial use.

A. Surface Water

1. CWA section 303(a-c), requires states to adopt water quality standards, including criteria where they are necessary to protect beneficial uses. The Central Valley Water Board adopted water quality criteria as water quality objectives in the Basin Plan. The Basin Plan states that "[t]*he numerical and narrative water quality objectives define the least stringent standards that the Regional Water Board will apply to regional waters in order to protect the beneficial uses.*" The Basin Plan includes numeric and narrative water quality objectives for various beneficial uses and water bodies. This Order contains receiving surface water limitations based on the Basin Plan numerical and narrative water quality objectives for bacteria, biostimulatory substances, color, chemical constituents, dissolved oxygen, floating material, oil and grease, pH, pesticides, radioactivity, suspended sediment, settleable substances, suspended material, tastes and odors, temperature, toxicity, and turbidity.

   a. **pH.** Order No. R5-2006-0096 established a receiving water limitation for pH specifying that discharges from the Facility shall not cause the ambient pH to change by more than 0.5 units based on the water quality objective for pH in the Basin Plan, and allowed a 1-month averaging period for calculating pH change. The Central Valley Water Board adopted Resolution No. R5-2007-0136 on 25 October 2007, amending the Basin Plan to delete the portion of the pH water quality objective that limits the change in pH to 0.5 units and the allowance of averaging periods for pH. The Basin Plan amendment has been approved by the State Water Board, the Office of Administrative Law, and USEPA. Consistent with the revised water quality objective in the Basin Plan, this Order does not require a receiving water limitation for pH change.

      In Finding No. 14 of Resolution No. R5-2007-0136 the Central Valley Water Board found that the change in the pH receiving water objective is consistent

with the State Water Board Resolution No. 68-16, in that the changes to water quality objectives (i) consider maximum benefit to the people of the State, (ii) will not unreasonably affect present and anticipated beneficial use of waters, and (iii) will not result in water quality less than that prescribed in policies, and is consistent with the federal Antidegradation Policy (40 CFR 131.12).

Ammonia is the only constituent in the discharge regulated by this Order directly related to pH. The fixed ammonia effluent limitations in this Order are based on reasonable worse-case conditions. Although ammonia criteria are based on pH, and the pH receiving water limitations are more lenient in this Order than in the previous permit, the fixed ammonia limits are new limits, and are developed to protect under worse-case pH conditions. Therefore the relaxation of the pH receiving water limitation will protect aquatic life and other beneficial uses and will not unreasonably affect present and anticipated beneficial uses nor result in water quality less than described in applicable policies. The relaxation of the receiving water limitation is not expected to cause other impacts on water quality. The Central Valley Water Board finds that the relaxation of the pH receiving water limitation (i) is to the maximum benefit to the people of the State, (ii) will not unreasonably affect present and anticipated beneficial use of waters, and (iii) will not result in water quality less than that prescribed in policies, and is consistent with the federal Antidegradation Policy (40 CFR 131.12).

The revised receiving water limitation for pH, which is based on the amendment to the Basin Plan's pH water quality objective, reflects current scientifically supported pH requirements for the protection of aquatic life and other beneficial uses. The revised receiving water limitation for pH is more consistent with the current USEPA recommended criteria and is fully protective of aquatic life and the other beneficial uses listed in the Basin Plan. Changes in pH when pH is maintained within the range of 6.5 to 8.5 are neither beneficial nor adverse and, therefore, are not considered to be degradation in water quality. Attempting to restrict pH changes to 0.5 pH units would incur substantial costs without

demonstrable benefits to beneficial uses. Thus, any changes in pH that would occur under the revised pH limitation would not only be protective of beneficial uses, but also would be consistent with maximum benefit to people of the State. Therefore the proposed amendment will not violate antidegradation policies.

b. **Turbidity.** Order No. R5-2006-0096 established a receiving water limitation for turbidity specifying that discharges from the Facility shall not cause the turbidity to increase more than 1 NTU where natural turbidity is between 0 and 5 NTU based on the water quality objective for turbidity in the Basin Plan. The Central Valley Water Board adopted Resolution No. R5-2007-0136 on 25 October 2007, amending the Basin Plan to limit turbidity to 2 NTU when the natural turbidity is less than 1 NTU. The Basin Plan amendment has been approved by the State Water Board, the Office of Administrative Law, and USEPA. Consistent with the revised water quality objective in the Basin Plan, this Order limits turbidity to 2 NTU when the natural turbidity is less than 1 NTU.

In Finding No. 14 of Resolution No. R5-2007-0136 the Central Valley Water Board found that the change in the turbidity receiving water objective is consistent with the State Water Board Resolution No. 68-16, in that the changes to water quality objectives (i) consider maximum benefit to the people of the State, (ii) will not unreasonably affect present and anticipated beneficial use of waters, and (iii) will not result in water quality less than that prescribed in policies, and is consistent with the federal Antidegradation Policy (40 CFR 131.12).

This Order includes operational specifications that require the Discharger to operate the treatment system to insure that turbidity shall not exceed 2 NTU as a daily average, and 5 NTU more than 5 percent of the time within a 24 hour period, and 10 NTU, at any time. Because this Order limits the average daily discharge of turbidity to 2 NTU the Order will be protective of the receiving water under all natural background conditions as defined in the Basin Plan's revised water quality objective for turbidity. The relaxation of the turbidity

receiving water limitation will protect aquatic life and other beneficial uses and will not unreasonably affect present and anticipated beneficial uses nor result in water quality less than described in applicable policies. The relaxation of the receiving water limitation is not expected to cause other impacts on water quality. The Central Valley Water Board finds that the relaxation of the turbidity receiving water limitation is to the maximum benefit to the people of the State, (ii) will not unreasonably affect present and anticipated beneficial use of waters, and (iii) will not result in water quality less than that prescribed in policies, and is consistent with the federal Antidegradation Policy (40 CFR 131.12).

The revised receiving water limitation for turbidity, which is based on the amendment to the Basin Plan's turbidity water quality objective, reflects current scientifically supported turbidity requirements for the protection of aquatic life and other beneficial uses and, therefore, will be fully protective of aquatic life and the other beneficial uses listed in the Basin Plan. Changes in turbidity allowed by the revised receiving water limitation, when ambient turbidity is below 1 NTU, would not adversely affect beneficial uses and would maintain water quality at a level higher than necessary to protect beneficial uses. Restricting low-level turbidity changes further may require costly upgrades, which would not provide any additional protection of beneficial uses. Thus, any changes in turbidity that would occur under the amended turbidity receiving water limitation would not only be protective of beneficial uses, but also would be consistent with maximum benefit to people of the State. Therefore, the relaxed receiving water limitations for turbidity will not violate antidegradation policies.

B. Groundwater

1. The beneficial uses of the underlying ground water are municipal and domestic supply, industrial service supply, industrial process supply, and agricultural supply.

2. Basin Plan water quality objectives include narrative objectives for chemical constituents, tastes and odors, and toxicity of groundwater. The toxicity objective requires that groundwater be maintained free of toxic substances in concentrations

that produce detrimental physiological responses in humans, plants, animals, or aquatic life. The chemical constituent objective states groundwater shall not contain chemical constituents in concentrations that adversely affect any beneficial use. The tastes and odors objective prohibits taste- or odor-producing substances in concentrations that cause nuisance or adversely affect beneficial uses. The Basin Plan also establishes numerical water quality objectives for chemical constituents and radioactivity in groundwaters designated as municipal supply. These include, at a minimum, compliance with MCLs in Title 22 of the CCR. The bacteria objective prohibits coliform organisms at or above 2.2 MPN/100 mL. The Basin Plan requires the application of the most stringent objective necessary to ensure that waters do not contain chemical constituents, toxic substances, radionuclides, taste- or odor-producing substances, or bacteria in concentrations that adversely affect municipal or domestic supply, agricultural supply, industrial supply or some other beneficial use.

3. The Discharger currently discharges secondary treated wastewater continuously to the percolation ponds. As discussed in section III.E.1 of the Fact Sheet, groundwater monitoring results do not indicate a degradation in groundwater quality when compared to background. Upon completion of the current upgrade and expansion project and any necessary construction/improvements to the existing side-bank outfall, the Discharger will only discharge tertiary treated wastewater to the percolation ponds intermittently under emergency situations, such as during dechlorination failure or when maintenance may degrade effluent quality. The intermittent discharge of tertiary treated wastewater to the percolation ponds is expected to reduce the impacts to groundwater quality. Order No. R5-2006-0096 established groundwater limitations specifying that the discharge shall not cause the groundwater to exceed water quality objectives, unreasonably affect beneficial uses, or cause a condition of pollution or nuisance, as well as numeric groundwater limitations for total coliform organisms, electrical conductivity, total dissolved solids, and nitrate plus nitrite. Due to the reduced potential for impacts to groundwater from the intermittent emergency discharges to the percolation ponds, this Order revises the groundwater limitations and specifies that the intermittent discharges to the percolation ponds shall not

cause groundwater to contain constituents in concentrations greater than applicable water quality objectives or natural background quality, whichever is greater.

VI. RATIONALE FOR MONITORING AND REPORTING REQUIREMENTS

40 CFR 122.48 requires that all NPDES permits specify requirements for recording and reporting monitoring results. Water Code sections 13267 and 13383 authorizes the Central Valley Water Board to require technical and monitoring reports. The Monitoring and Reporting Program (Attachment E) of this Order, establishes monitoring and reporting requirements to implement federal and state requirements. The following provides the rationale for the monitoring and reporting requirements contained in the Monitoring and Reporting Program for the Facility.

A. Influent Monitoring

1. Influent monitoring is required to collect data on the characteristics of the wastewater and to assess compliance with effluent limitations (e.g., BOD_5 and TSS reduction requirements). The monitoring frequencies for flow (continuous), BOD_5 (three per week), TSS (three per week), and pH (continuous) have been retained from Order No. R5-2006-0096. Annual monitoring requirements for priority pollutants have not been retained from Order No. R5-2006-0096 as they are not necessary to determine compliance with permit requirements.

B. Effluent Monitoring

1. Pursuant to the requirements of 40 CFR 122.44(i)(2) effluent monitoring is required for all constituents with effluent limitations. Effluent monitoring is necessary to assess compliance with effluent limitations, assess the effectiveness of the treatment process, and to assess the impacts of the discharge on the receiving stream and groundwater.

2. California Water Code section 13176, subdivision (a), states: "*The analysis of any material required by [Water Code sections 13000-16104] shall be performed by a laboratory that has accreditation or certification pursuant to Article 3 (commencing*

with Section 100825) of Chapter 4 of Part 1 of Division 101 of the Health and Safety Code." DPH certifies laboratories through its Environmental Laboratory Accreditation Program (ELAP).

Section 13176 cannot be interpreted in a manner that would violate federal holding time requirements that apply to NPDES permits pursuant to the CWA. (Water Code section 13370, subd. (c), 13372, 13377.) Section 13176 is inapplicable to NPDES permits to the extent it is inconsistent with CWA requirements. (Water Code section 13372, subd. (a).) The holding time requirements are 15 minutes for chlorine residual, dissolved oxygen, and pH and immediate analysis is required for temperature. (40 C.F.R. § 136.3(e), Table II.) Due to the location of the Facility, it is both legally and factually impossible for the Discharger to comply with section 13176 for constituents with short holding times.

3. Effluent Monitoring at Discharge Point No. 001

a. Effluent monitoring frequencies and sample types for flow (continuous), BOD_5 (three per week), TSS (three per week), pH (continuous), ammonia (three per week), bis (2-ethylhexyl) phthalate (monthly), copper (monthly), dechlorination (continuous), dichlorobromomethane (monthly), EC (continuous), hardness (monthly), manganese (monthly), mercury (monthly), nitrate (twice per month), nitrite (twice per month), temperature (daily), total coliform organisms (three per week), total dissolved solids (monthly), and total residual chlorine (continuous) have been retained at Monitoring Location EFF-001 from Order No. R5-2006-0096 to determine compliance with effluent limitations for these parameters.

b. Monitoring data collected over the term of Order No. R5-2006-0096 for carbon tetrachloride and methylene blue active substances indicates reasonable potential to cause or contribute to an exceedance of applicable water quality criteria and effluent limitations have been established in this Order. Therefore, effluent monitoring with a frequency of monthly for carbon tetrachloride and methylene blue active substances has been established in this Order to determine compliance with effluent limitations.

c. This Order includes effluent limitations for diazinon and chlorpyrifos based on the applicable TMDL for the Feather River. Monitoring data over the term of Order No. R5-2006-0096 did not indicate reasonable potential to cause or contribute to an exceedance of water quality criteria for diazinon. Therefore, this Order reduces the monitoring frequency for diazinon from monthly to quarterly. Effluent monitoring data for chlorpyrifos is not available; therefore, this Order establishes quarterly monitoring for chlorpyrifos to characterize its presence in the effluent and determine compliance with the applicable effluent limitations based on the TMDL.

d. Monitoring data collected over the existing permit term for aluminum, chloroform, chromium (VI), cis-1,2-dichloroethene, cyanide, iron, lead, methoxychlor, methylmercury, oil and grease, persistent chlorinated hydrocarbon pesticides, settleable solids, standard minerals, tetrachloroethene, thiobencarb, and zinc did not demonstrate reasonable potential to exceed water quality objectives/criteria. Thus, specific monitoring requirements for these parameters have not been retained from Order No. R5-2006-0096.

e. Several PAHs, including anthracene, benzo(a)anthracene, benzo(a)pyrene, benzo(b)fluoranthene, benzo(ghi)perylene, benzo(k)fluoranthene, chrysene, dibenzo(a,h)anthracene, fluoranthene, fluorine, indeno(1,2,3-cd)pyrene, naphthalene, phenanthrene, and pyrene, were detected in a 9 July 2008 sample. A 2 August 2011 email from the contract laboratory Sierra Foothill Laboratory indicates that the results are more than 10 times the spike levels, and a 2 November 2011 letter from the sub-contract laboratory McCambell Analytical, Inc. indicates potential laboratory error for the sample. In order to verify that PAHs are not present in the effluent at concentrations that have reasonable potential to cause or contribute to an exceedance of applicable water quality criteria, this Order requires quarterly monitoring for 2 years, for a total of eight samples, to determine the presence of PAHs in the effluent. The Discharger is not required to sample PAHs in the effluent during those 2 years as part of the Effluent and Receiving Water Characterization Study required in Attachment I.

f. Turbidity is included in this Order as an operational specification as an indicator of the treatment process. Continuous monitoring requirements for turbidity have been established in this Order to determine compliance with the requirements of this Order.

g. Priority pollutant data for the effluent has been provided by the Discharger over the term of Order No. R5-2006-0096 and was used to conduct a meaningful RPA. In accordance with Section 1.3 of the SIP, periodic monitoring for priority pollutants for which criteria or objectives apply and for which no effluent limitations have been established is required. Consistent with Order No. R5-2006-0096, this Order requires monitoring twice per year at Discharge Point No. 001 in order to collect data to conduct an RPA for the next permit renewal. See Attachment I for more detailed requirements related to performing priority pollutant monitoring.

4. Effluent Monitoring at Discharge Point No. 002

a. Effluent monitoring frequencies and sample types for flow (continuous), BOD_5 (weekly), TSS (weekly), pH (daily), ammonia (twice per week), dechlorination agent (continuous), EC (continuous), mercury (monthly), nitrate (monthly), nitrite (monthly), temperature (daily), total chlorine residual (continuous), total coliform organisms (weekly), total dissolved solids (quarterly), and turbidity (continuous) have been retained for Discharge Point No. 002 from Order No. R5-2006-0096 to determine compliance with effluent limitations for these parameters.

b. Monitoring data collected over the term of Order No. R5-2006-0096 for bis (2-ethylhexyl) phthalate, carbon tetrachloride, copper, dichlorobromomethane, manganese and methylene blue active substances indicates reasonable potential to cause or contribute to an exceedance of applicable water quality criteria and effluent limitations are included in this Order. Therefore, this Order revises the monitoring frequency from quarterly to monthly for bis (2-ethylhexyl) phthalate, copper, dichlorobromomethane, and manganese and establishes monthly

monitoring for carbon tetrachloride and methylene blue active substances to determine compliance with effluent limitations.

c. Order No. R5-2006-0096 required quarterly effluent monitoring for hardness. This Order revises the monitoring frequency for hardness from quarterly to monthly to ensure that adequate data is available to properly adjust water quality criteria for hardness-based metals.

d. Turbidity is included in this Order as an operational specification as an indicator of the treatment process. Continuous monitoring requirements for turbidity have been established in this Order to determine compliance with the requirements of this Order.

e. This Order includes effluent limitations for diazinon and chlorpyrifos based on the applicable TMDL for the Feather River. Monitoring data over the term of Order No. R5-2006-0096 did not indicate reasonable potential to cause or contribute to an exceedance of water quality criteria for diazinon. Therefore, this Order reduces the monitoring frequency for diazinon from monthly to quarterly. Effluent monitoring data for chlorpyrifos is not available; therefore, this Order establishes quarterly monitoring for chlorpyrifos to characterize its presence in the effluent and determine compliance with the applicable effluent limitations based on the TMDL.

f. Monitoring data collected over the existing permit term for aluminum, chloroform, chromium (VI), cis-1,2-dichloroethene, cyanide, dibenzo(a,h)anthracene, iron, lead, methoxychlor, oil and grease, persistent chlorinated hydrocarbon pesticides, settleable solids, standard minerals, thiobencarb, tetrachloroethene, and zinc did not demonstrate reasonable potential to exceed water quality objectives/criteria. Thus, specific monitoring requirements for these parameters have not been retained from Order No. R5-2006-0096.

g. Priority pollutant data for the effluent has been provided by the Discharger over the term of Order No. R5-2006-0096, and was used to conduct a meaningful

RPA. In accordance with Section 1.3 of the SIP, periodic monitoring for priority pollutants for which criteria or objectives apply and for which no effluent limitations have been established is required. Consistent with Order No. R5-2006-0096, this Order requires annual monitoring at Discharge Point No. 002 in order to collect data to conduct an RPA for the next permit renewal. See Attachment I for more detailed requirements related to performing priority pollutant monitoring.

C. Whole Effluent Toxicity Testing Requirements

1. **Acute Toxicity.** Consistent with Order No. R5-2006-0096, monthly 96-hour bioassay testing is required to demonstrate compliance with the effluent limitation for acute toxicity.

2. **Chronic Toxicity.** Consistent with Order No. R5-2006-0096, quarterly chronic whole effluent toxicity testing is required in order to demonstrate compliance with the Basin Plan's narrative toxicity objective.

D. Receiving Water Monitoring

1. **Surface Water**

   a. Receiving water monitoring is necessary to assess compliance with receiving water limitations and to assess the impacts of the discharge on the receiving stream.

   b. Provision No. VI.C.2.f of Order No. R5-2006-0096 required the Discharger to submit a list of proposed Feather River monitoring locations, one 600 feet downstream and one 100 feet upstream of Discharge Point No. 001, which were called Monitoring Locations R-002 and R-004. These locations were to be monitored when discharging at Discharge Point No. 001 upon installation of a diffuser. While discharging to the ponds at Discharge Point No. 002, Order No. R5-2006-0096 required receiving water monitoring upstream of the northernmost pond and downstream of the southernmost pond at Monitoring Locations R-001 and R-003, respectively. The Discharger has determined that installation of a

diffuser is infeasible and is proposing to discharge from the existing bank outfall at Discharge Point No. 001, which is located between Monitoring Locations R-001 and R-003. Therefore, monitoring from Monitoring Locations R-002 and R-004 is not necessary to determine compliance with permit requirements and this Order does not retain monitoring requirements for Monitoring Locations R-002 and R-004. To be consistent with the Central Valley Water Board's standard naming conventions for receiving water monitoring locations, Monitoring Locations R-001 and R-003 are referred to as Monitoring Locations RSW-001 and RSW-002, respectively, in this Order.

c. This Order allows a mixing zone as discussed below. This Order establishes a new receiving water monitoring location 3,000 feet downstream of the outfall to Feather River at Monitoring Location RSW-003 to verify the mixing zone.

d. Monitoring Locations RSW-001 and RSW-002

i. Receiving water monitoring frequencies and sample types for pH (weekly), dissolved oxygen (weekly), electrical conductivity (weekly), fecal coliform organisms (quarterly), hardness (monthly), temperature (weekly), and turbidity (weekly) have been retained from Order No. R5-2006-0096.

ii. Monitoring requirements for radionuclides, settleable solids, thiobencarb, TSS, and trihalomethanes have not been retained from Order No. R5-2006-0096 as they are not necessary to determine compliance with permit requirements.

iii. Priority pollutant data for the receiving water has been provided by the Discharger over the term of Order No. R5-2006-0096, and was used to conduct a meaningful RPA. In accordance with Section 1.3 of the SIP, periodic monitoring for priority pollutants for which criteria or objectives apply and for which no effluent limitations have been established. Consistent with Order No. R5-2006-0096, this Order requires annual monitoring, performed concurrently with effluent monitoring, in order to collect data to conduct an RPA for the next permit renewal.

iv. Provision No. VI.C.2.f of Order No. R5-2006-0096 required the Discharger to submit a list of proposed Feather River monitoring locations, one 600 feet downstream and one 100 feet upstream of Discharge Point No. 001, which were called RSW-002 and RSW-004. These locations were to be monitored when discharging at Discharge Point No. 001 upon installation of a diffuser. The Discharger has determined that installation of a diffuser is infeasible and is proposing to discharge from the existing bank outfall. Therefore, monitoring from Monitoring Locations RSW-002 and RSW-004 is not necessary to determine compliance with permit requirements. Therefore, this Order does not retain Monitoring Requirements for RSW-002 and RSW-004, and establishes all receiving water monitoring requirements at Monitoring Locations RSW-001 and RSW-002.

v. Order No. R5-2006-0096 required receiving water monitoring for chloroform, cis-1,2-dichloroethene, dichlorobromomethane, methylene blue activate substances, tetrachloroethene, and thiobencarb to validate the mixing zone and dilution credits authorized by Order No. R5-2006-0096. As discussed in section IV.C.2.c of this Fact Sheet, this Order revises the allowable mixing zone and dilution credits for constituents with human health-based criteria. This Order includes effluent limitations calculated with credit for dilution for bis (2-ethylhexyl) phthalate, carbon tetrachloride, dichlorobromomethane, manganese, and methylene blue active substances; therefore, this Order requires quarterly monitoring for these constituents to verify that assimilative capacity is available and that the mixing zone and dilution credits are protective of the receiving water. This Order does not retain monitoring requirements for chloroform, cis-1,2-dichloroethene, tetrachloroethene, and thiobencarb because these constituents did not exhibit reasonable potential to cause or contribute to an exceedance of water quality objectives.

e. Monitoring Location RSW-003

i. This Order allows a mixing zone for constituents with human health criteria, including bis (2-ethylhexyl) phthalate, carbon tetrachloride, dichlorobromomethane manganese, and methylene blue active substances. In order to verify that the mixing zone and dilution credits are protective of the receiving water, this Order establishes quarterly monitoring for these constituents at new Monitoring Location RSW-003.

2. Groundwater

a. Water Code section 13267 states, in part, "*(a) A Regional Water Board, in establishing…waste discharge requirements… may investigate the quality of any waters of the state within its region" and "(b) (1) In conducting an investigation…, the Regional Water Board may require that any person who… discharges… waste…that could affect the quality of waters within its region shall furnish, under penalty of perjury, technical or monitoring program reports which the Regional Water Board requires. The burden, including costs, of these reports shall bear a reasonable relationship to the need for the report and the benefits to be obtained from the reports.*" The burden, including costs, of these reports shall bear a reasonable relationship to the need for the report and the benefits to be obtained from the reports. In requiring those reports, the Central Valley Water Board shall provide the person with a written explanation with regard to the need for the reports, and shall identify the evidence that supports requiring that person to provide the reports. The Monitoring and Reporting Program is issued pursuant to Water Code section 13267. The groundwater monitoring and reporting program required by this Order and the Monitoring and Reporting Program are necessary to assure compliance with these waste discharge requirements. The Discharger is responsible for the discharges of waste at the facility subject to this Order.

b. Monitoring of the groundwater must be conducted to determine if the discharge has caused an increase in constituent concentrations, when compared to background. The monitoring must, at a minimum, require a complete assessment

of groundwater impacts including the vertical and lateral extent of degradation, an assessment of all wastewater-related constituents which may have migrated to groundwater, an analysis of whether additional or different methods of treatment or control of the discharge are necessary to provide best practicable treatment or control to comply with Resolution No. 68-16. Economic analysis is only one of many factors considered in determining best practicable treatment or control. If monitoring indicates that the discharge has incrementally increased constituent concentrations in groundwater above background, this permit may be reopened and modified. Until groundwater monitoring is sufficient, this Order contains Groundwater Limitations that allow groundwater quality to be degraded for certain constituents when compared to background groundwater quality, but not to exceed water quality objectives. If groundwater quality has been degraded by the discharge, the incremental change in pollutant concentration (when compared with background) may not be increased. If groundwater quality has been or may be degraded by the discharge, this Order may be reopened and specific numeric limitations established consistent with Resolution No. 68-16 and the Basin Plan.

c. This Order requires the Discharger to conduct groundwater monitoring and includes a regular schedule of groundwater monitoring in the attached Monitoring and Reporting Program. The groundwater monitoring reports are necessary to evaluate impacts to waters of the State to assure protection of beneficial uses and compliance with Central Valley Water Board plans and policies, including Resolution No. 68-16. Evidence in the record includes effluent monitoring data that indicates the presence of constituents that may degrade groundwater and surface water.

d. The Discharger currently discharges secondary treated wastewater continuously to the percolation ponds. However, upon completion of the current upgrade and expansion project and any necessary construction/improvements to the existing side-bank outfall, the Discharger will only discharge tertiary treated wastewater to the percolation ponds intermittently under emergency situations, such as during dechlorination failure or when maintenance may degrade effluent quality. The

intermittent discharge of tertiary treated wastewater to the percolation ponds is expected to reduce the impacts to groundwater quality. Therefore, this Order allows the Discharger to discontinue groundwater monitoring 2 years following the initial use of the percolation ponds for emergency discharges.

e. Consistent with Order No. R5-2006-0096, this Order requires groundwater monitoring for pH, electrical conductivity, total dissolved solids, total nitrogen, nitrate, total kjeldahl nitrogen, and fecal coliform organisms. This Order discontinues monitoring for total coliform organisms, standard minerals, and Title 22 metals.

f. Because the use of chlorine disinfection may potentially cause the formation of THMs in the percolation ponds, this Order establishes monitoring for THMs (i.e., bromoform, chlorodibromomethane, chloroform, and dichlorobromomethane) to ensure that THMs are not degrading the underlying groundwater.

g. As discussed in section II.E.1 of this Fact Sheet, elevated iron and manganese concentrations were observed in the up gradient and down gradient groundwater wells. Therefore, this Order establishes monitoring for iron and manganese to ensure that discharges from the percolations ponds are not causing increases over background groundwater concentrations.

E. Other Monitoring Requirements

1. Biosolids Monitoring

Biosolids monitoring is required to ensure compliance with the biosolids disposal requirements contained in the Special Provision contained in section VI.C.6.a of this Order. Biosolids disposal requirements are imposed pursuant to 40 CFR Part 503 to protect public health and prevent groundwater degradation.

2. Municipal Water Supply Monitoring

Water supply monitoring is required to evaluate the source of constituents in the wastewater. This Order requires annual water supply monitoring for total dissolved solids and electrical conductivity. This Order does not retain water supply monitoring for standard minerals from Order No. R5-2006-0096.

3. Land Discharge Monitoring

Pond monitoring is required to ensure proper operation of the percolation ponds. Weekly monitoring for freeboard, dissolved oxygen, electrical conductivity, and odors has been retained from Order No. R5-2006-0096.

4. Effluent and Receiving Water Characterization Study

An effluent and receiving water monitoring study is required to ensure adequate information is available for the next permit renewal. The Discharger is required to monitor semi-annually and annualy at Monitoring Location EFF-001 for all priority pollutants and other constituents of concern as described in Attachment I.

VII. RATIONALE FOR PROVISIONS

A. Standard Provisions

Standard Provisions, which apply to all NPDES permits in accordance with 40 CFR 122.41, and additional conditions applicable to specified categories of permits in accordance with 40 CFR 122.42, are provided in Attachment D. The discharger must comply with all standard provisions and with those additional conditions that are applicable under 40 CFR 122.42.

40 CFR 122.41(a)(1) and (b) through (n) establish conditions that apply to all State-issued NPDES permits. These conditions must be incorporated into the permits either expressly or by reference. If incorporated by reference, a specific citation to the regulations must be included in the Order. 40 CFR 123.25(a)(12) allows the state to omit or modify conditions to impose more stringent requirements. In accordance with

40 CFR 123.25, this Order omits federal conditions that address enforcement authority specified in 40 CFR 122.41(j)(5) and (k)(2) because the enforcement authority under the Water Code is more stringent. In lieu of these conditions, this Order incorporates by reference Water Code section 13387(e).

B. Special Provisions

1. Reopener Provisions

a. **Mercury.** This provision allows the Central Valley Water Board to reopen this Order in the event mercury is found to be causing toxicity based on acute or chronic toxicity test results, or if a TMDL program is adopted. In addition, this Order may be reopened if the Central Valley Water Board determines that a mercury offset program is feasible for dischargers subject to NPDES permits.

b. **Whole Effluent Toxicity.** This Order requires the Discharger to investigate the causes of, and identify corrective actions to reduce or eliminate effluent toxicity through a TRE. This Order may be reopened to include a numeric chronic toxicity limitation, a new acute toxicity limitation, and/or a limitation for a specific toxicant identified in the TRE. Additionally, if a numeric chronic toxicity water quality objective is adopted by the State Water Board, this Order may be reopened to include a numeric chronic toxicity limitation based on that objective.

c. **Chronic Whole Effluent Toxicity.** Order No. R5-2006-0096 required chronic toxicity testing when discharging to the Feather River at Discharge Point No. 001. The Discharger has not yet commenced discharges to the Feather River at Discharge Point No. 001, and thus has not conducted chronic toxicity testing. This Order retains quarterly chronic toxicity testing for discharges to the Feather River at Discharge Point No. 001. If the results of quarterly chronic toxicity testing indicate that the discharge exhibits reasonable potential to cause or contribute to the Basin Plan's narrative toxicity objective, this Order may be reopened to establish an effluent limitation for chronic toxicity.

d. **Water Effects Ratio (WER) and Metal Translators.** A default WER of 1.0 has been used in this Order for calculating CTR criteria for applicable priority and non-priority pollutant inorganic constituents. In addition, default dissolved-to-total metal translators have been used to convert water quality objectives from dissolved to total recoverable when developing effluent limitations for copper. If the Discharger performs studies to determine site-specific WERs and/or site-specific dissolved-to-total metal translators, this Order may be reopened to modify the effluent limitations for the applicable inorganic constituents.

e. **Bis (2-ethylhexyl) Phthalate.** Special Provision VI.C.2.c requires the Discharger to conduct a study and monitoring using "clean techniques" to ensure that sample containers, sampling apparatus, and analytical equipment are not sources of detections of bis (2-ethylhexyl) phthalate in the effluent. If the results of the study and monitoring indicate that bis (2-ethylhexyl) phthalate does not exhibit reasonable potential to cause or contribute to an exceedance of applicable water quality criteria, this Order may be reopened to remove the effluent limitations for bis (2-ethylhexyl) phthalate.

f. **Polycyclic Aromatic Hydrocarbons (PAHs).** Special Provision VI.C.2.d requires the Discharger to conduct a study and monitoring to determine the presence of PAHs in the effluent. If the results of the study required by Special Provision VI.C.2.c and monitoring indicate that any PAHs exhibit reasonable potential to cause or contribute to an exceedance of applicable water quality criteria, this Order may be reopened to establish effluent limitations for the applicable constituents.

g. **Mixing Zone/Dilution Credits.** This Order allows for a mixing zone and dilution credits for human health constituents and salinity. This Order requires the Discharger to conduct a mixing zone study following commencement of discharges to the Feather River to validate the mixing zone and dilution credits. If the results of the Mixing Zone Verification Study indicate that the mixing zone/dilution credits allowed by this Order are inconsistent with Section 1.4.2.2

of the SIP, or if monitoring data from the upgraded and expanded Facility or regionalized Facility indicate that the Facility can comply with more stringent performance-based effluent limitations, this Order may be reopened to revise applicable effluent limitations accordingly. This order may be reopened if the Discharger submits data substantiating an acute and/or chronic mixing zone is achievable following the requirements set forth in the SIP.

2. Special Studies and Additional Monitoring Requirements

a. Chronic Whole Effluent Toxicity Requirements. The Basin Plan contains a narrative toxicity objective that states, "All waters shall be maintained free of toxic substances in concentrations that produce detrimental physiological responses in human, plant, animal, or aquatic life." (Basin Plan at page III-8.00.) Adequate WET data is not available to determine if the discharge has reasonable potential to cause or contribute to an in-stream excursion above the Basin Plan's narrative toxicity objective.

The Monitoring and Reporting Program of this Order requires chronic WET monitoring for demonstration of compliance with the narrative toxicity objective. In addition to WET monitoring, this provision requires the Discharger to submit to the Central Valley Water Board an Initial Investigative TRE Workplan for approval by the Executive Officer, to ensure the Discharger has a plan to immediately move forward with the initial tiers of a TRE, in the event effluent toxicity is encountered in the future. The provision also includes a numeric toxicity monitoring trigger, requirements for accelerated monitoring, and requirements for TRE initiation if toxicity is demonstrated.

Monitoring Trigger. A numeric toxicity monitoring trigger of > 1 TUc (where TUc = 100/NOEC) is applied in the provision, because this Order does not allow any dilution for the chronic condition. Therefore, a TRE is triggered when the effluent exhibits toxicity at 100 percent effluent.

Accelerated Monitoring. The provision requires accelerated WET testing when a regular WET test result exceeds the monitoring trigger. The purpose of accelerated monitoring is to determine, in an expedient manner, whether there is toxicity before requiring the implementation of a TRE. Due to possible seasonality of the toxicity, the accelerated monitoring should be performed in a timely manner, preferably taking no more than 2 to 3 months to complete.

The provision requires accelerated monitoring consisting of four chronic toxicity tests in a six-week period (i.e., one test every two weeks) using the species that exhibited toxicity. Guidance regarding accelerated monitoring and TRE initiation is provided in the *Technical Support Document for Water Quality-based Toxics Control,* EPA/505/2-90-001, March 1991 (TSD). The TSD at page 118 states, "*EPA recommends if toxicity is repeatedly or periodically present at levels above effluent limits more than 20 percent of the time, a TRE should be required.*" Therefore, four accelerated monitoring tests are required in this provision. If no toxicity is demonstrated in the four accelerated tests, then it demonstrates that toxicity is not present at levels above the monitoring trigger more than 20 percent of the time (only 1 of 5 tests are toxic, including the initial test). However, notwithstanding the accelerated monitoring results, if there is adequate evidence of effluent toxicity (i.e. toxicity present exceeding the monitoring trigger more than 20 percent of the time), the Executive Officer may require that the Discharger initiate a TRE.

See the WET Accelerated Monitoring Flow Chart (Figure F-1), below, for further clarification of the accelerated monitoring requirements and for the decision points for determining the need for TRE initiation.

TRE Guidance. The Discharger is required to prepare a TRE Workplan in accordance with USEPA guidance. Numerous guidance documents are available, as identified below:

- Toxicity Reduction Evaluation Guidance for Municipal Wastewater Treatment Plants, EPA/833-B-99/002, August 1999.

- Generalized Methodology for Conducting Industrial Toxicity Reduction Evaluations (TREs), EPA/600/2-88/070, April 1989.
- Methods for Aquatic Toxicity Identification Evaluations: Phase I Toxicity Characterization Procedures, Second Edition, EPA 600/6-91/003, February 1991.
- Toxicity Identification Evaluation: Characterization of Chronically Toxic Effluents, Phase I, EPA/600/6-91/005F, May 1992.
- Methods for Aquatic Toxicity Identification Evaluations: Phase II Toxicity Identification Procedures for Samples Exhibiting Acute and Chronic Toxicity, Second Edition, EPA/600/R-92/080, September 1993.
- Methods for Aquatic Toxicity Identification Evaluations: Phase III Toxicity Confirmation Procedures for Samples Exhibiting Acute and Chronic Toxicity, Second Edition, EPA 600/R-92/081, September 1993.
- Methods for Measuring the Acute Toxicity of Effluents and Receiving Waters to Freshwater and Marine Organisms, Fifth Edition, EPA-821-R-02-012, October 2002.
- Short-term Methods for Estimating the Chronic Toxicity of Effluents and Receiving Waters to Freshwater Organisms, Fourth Edition, EPA-821-R-02-013, October 2002.
- Technical Support Document for Water Quality-based Toxics Control, EPA/505/2-90-001, March 1991.

Figure F-1

WET Accelerated Monitoring Flow Chart

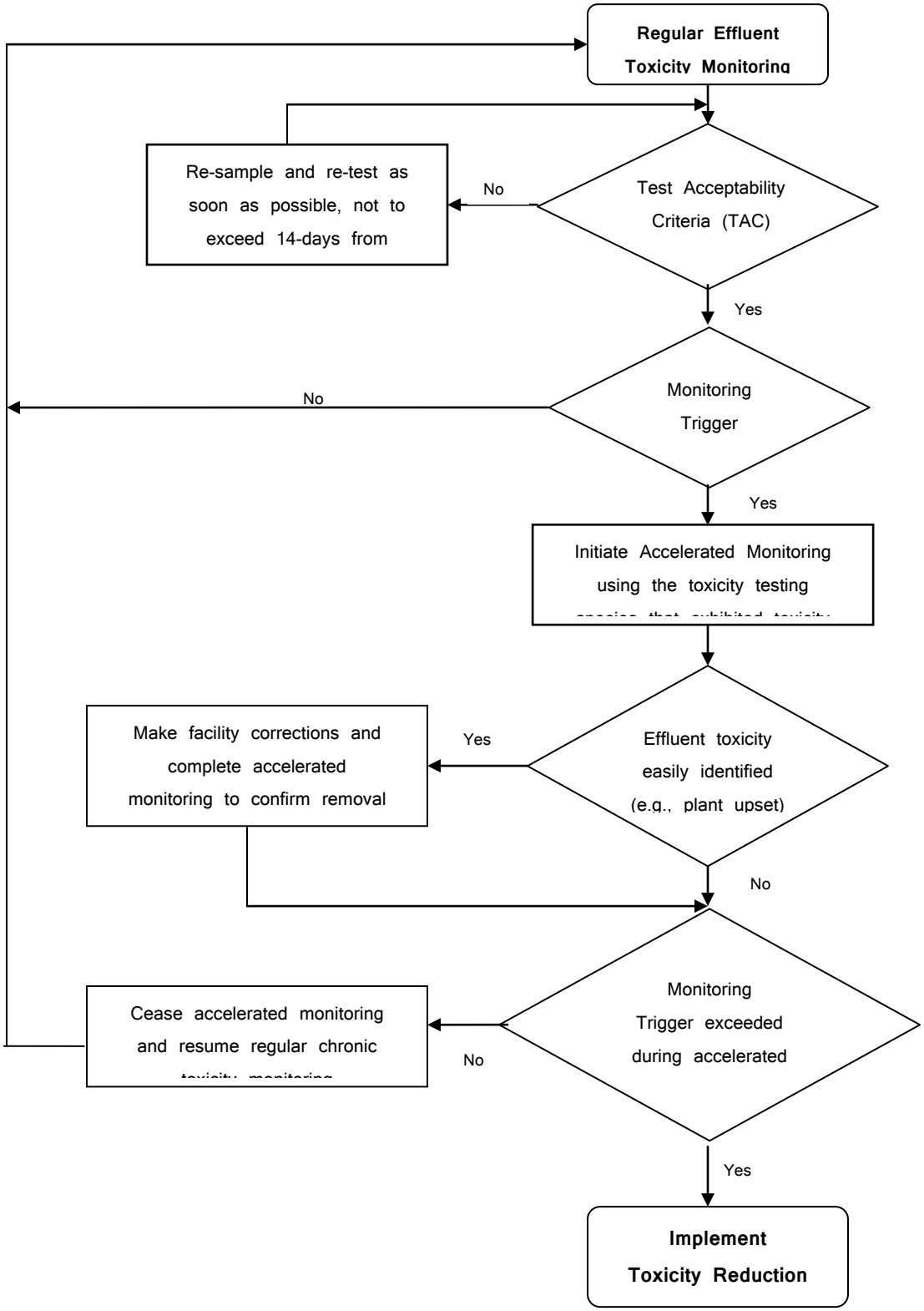

b. **Mixing Zone Verification Study.** As discussed in section IV.C.2.c of this Fact Sheet (Attachment F), this Order allows a mixing zone that extends 3,700 feet downstream of Discharge Point No. 001 and a dilution credit of 347 for human health constituents. Since the Discharger has not commenced discharges to the Feather River at Discharge Point No. 001, certain assumptions have to be made and cannot yet be validated. Therefore, this Order requires the Discharger to conduct a mixing zone study following commencement of discharges to the Feather River to validate the mixing zone and dilution credits. A work plan and schedule for conducting the study shall be submitted to the Central Valley Water Board within 6 months of adoption of this Order. The mixing zone verification study shall be completed and submitted to the Central Valley Water Board within 18 months of initiating discharge to Discharge Point No. 001.

c. **Bis (2-ethylhexyl) Phthalate Study.** Monitoring data indicates that the effluent has reasonable potential to cause or contribute to an exceedance of water quality criteria for bis (2-ethylhexyl) phthalate; however, bis (2-ethylhexyl) phthalate is a common contaminant of sample containers, sampling apparatus, and analytical equipment, and sources of the detected bis (2-ethylhexyl) phthalate may be from plastics used for sampling or analytical equipment. The Discharger indicated in a 2 August 2011 email that effluent and receiving water samples collected during the term of Order No. R5-2006-0096 were not collected and analyzed using "clean techniques" to ensure that sample containers, sampling apparatus, and analytical equipment are not sources of the detections. Therefore, this Order requires the Discharger to conduct a study and monitoring using "clean techniques" to ensure that sample containers, sampling apparatus, and analytical equipment are not sources of detections of bis (2-ethylhexyl) phthalate in the effluent.

d. **Polycyclic Aromatic Hydrocarbons (PAHs) Study.** Several PAHs were detected in a 9 July 2008 sample; however, a 2 August 2011 email from the contract laboratory Sierra Foothill Laboratory indicates that the results are more than 10 times the spike levels, and a 2 November 2011 letter from the sub-contract

laboratory McCambell Analytical, Inc. indicates potential laboratory error for the sample. Therefore, the 9 July 2008 sample results for these constituents were not used for the RPA and effluent limitations for individual PAHs are not included in this Order. With the exception of dibenzo (a,h) anthracene, for which 13 samples are available, monitoring data for PAHs is limited to two samples on 17 August 2009 and 13 October 2010. In order to verify that PAHs are not present in the effluent at concentrations that have reasonable potential to cause or contribute to an exceedance of applicable water quality criteria, this Order requires the Discharger to conduct a study and monitoring to determine the presence of PAHs in the effluent.

3. Best Management Practices and Pollution Prevention

a. Salinity Evaluation and Minimization Plan. The Discharger submitted a 28 October 2009 *Salinity Evaluation and Minimization Plan* (Kennedy/Jenks Consultants). The plan indicated that the water supply, which is drawn from six groundwater wells, contributes 60% of the salinity loading to the Facility. The plan concluded that alternate drinking water sources, such as deeper wells or surface water, are not feasible. The plan proposed salinity minimization goals, including distributing a public service announcement, sewer system monitoring to identify commercial sources, initiating a water softener rebate program, and preventing installation of new water softeners. The Discharger presented the water softener rebate program to their board; however, their board has not yet adopted the proposed program. This Order requires the Discharger to update and implement the Salinity Evaluation and Minimization Plan to ensure adequate measures are developed and implemented by the Discharger to reduce the discharge of salinity to Feather River.

4. Construction, Operation, and Maintenance Specifications

a. Turbidity Operational Requirements. Turbidity is included as an operational specification as an indicator of the effectiveness of the treatment process and to assure compliance with effluent limitations for total coliform organisms. The

tertiary treatment process utilized at this Facility is capable of reliably meeting a turbidity limitation of 2 NTU as a daily average. Failure of the treatment system such that virus removal is impaired would normally result in increased particles in the effluent, which result in higher effluent turbidity. Turbidity has a major advantage for monitoring filter performance, allowing immediate detection of filter failure and rapid corrective action. The operational specification requires that turbidity shall not exceed 2 NTU as a daily average; 5 NTU, more than 5 percent of the time within a 24-hour period, and an instantaneous maximum of 10 NTU. Turbidity specifications are included as operating criteria in section VI.C.4.a of this Order to ensure that adequate disinfection of wastewater is achieved.

b. Consistent with Order No. R5-2006-0096, after completion of the Facility upgrades and expansion, this Order requires wastewater to be oxidized, filtered, and adequately disinfected pursuant to DPH reclamation criteria, CCR, Title 22, division 4, chapter 3 (Title 22), or equivalent.

c. Consistent with Order No. R5-2006-0096, this Order requires that the treatment, storage, and disposal facilities be designed, constructed, operated, and maintained to prevent inundation or washout due to floods with a 100-year return frequency except for ponds located within the Feather River levees.

5. Special Provisions for Municipal Facilities (POTWs Only)

a. Pretreatment Requirements. 40 CFR 403.8(a) requires POTWs with a total design flow greater than 5 MGD and receiving pollutants which pass through or interfere with the operation of the POTW to establish a POTW Pretreatment Program. Order No. R5-2006-0096 authorized an expansion of the Facility to provide treatment for up to 5.0 MGD and required the Discharger to submit an Industrial Pretreatment Program for Central Valley Water Board approval within 6 months of the wastewater treatment plant being rated as having 5.0 MGD capacity. The Discharger did not complete the expansion of the Facility during the term of Order No. R5-2006-0096, which is scheduled for completion in

December 2012; therefore, the Discharger has not yet submitted an Industrial Pretreatment Program for approval. Although the Facility is scheduled to complete the upgrade and expansion project that will increase the design flow to 5.0 MGD by December 2012, the Facility does not receive wastes from any known industrial users. Additionally, the City of Marysville WWTP, does not accept wastewater from any known industrial users. Therefore, this Order does not require the Discharger to develop a pretreatment program at this time pursuant to USEPA regulations at 40 CFR Part 403. This Order does, however, require the Discharger to implement the necessary legal authorities, programs, and controls to ensure that incompatible wastes are not introduced into the treatment system and to ensure that indirect discharges do not introduce pollutants into the sewerage system.

b. **Collection System.** The State Water Board issued General Waste Discharge Requirements for Sanitary Sewer Systems, Water Quality Order No. 2006-0003-DWQ (General Order) on 2 May 2006. The General Order requires public agencies that own or operate sanitary sewer systems with greater than 1 mile of pipes or sewer lines to enroll for coverage under the General Order. The General Order requires agencies to develop sanitary sewer management plans (SSMPs) and report all sanitary sewer overflows (SSOs), among other requirements and prohibitions.

Furthermore, the General Order contains requirements for operation and maintenance of collection systems and for reporting and mitigating sanitary sewer overflows. Inasmuch that the Discharger's collection system is part of the system that is subject to this Order, certain standard provisions are applicable as specified in Provisions, section VI.C.5. For instance, the 24-hour reporting requirements in this Order are not included in the General Order. The Discharger must comply with both the General Order and this Order. The Discharger and public agencies that are discharging wastewater into the Facility were required to obtain enrollment for regulation under the General Order by 1 December 2006.

c. **Continuous Monitoring Systems.** This Order, and the Monitoring and Reporting Program which is a part of this Order, requires that certain parameters be monitored on a continuous basis. The Facility is typically staffed for 8 hours a day and unattended for 16 hours per day. Permit violations or system upsets can go undetected during this period. The Discharger has a system in place to automatically contact Facility operators in the event of alarms generated at the wastewater treatment plant. The Discharger is required to establish an electronic system for operator notification based on continuous recording device alarms. For any future facility upgrades, the Discharger shall upgrade the continuous monitoring and notification system simultaneously.

6. Other Special Provisions

a. **Facility Expansion.** The Discharger is planning a regionalization project with the City of Marysville. Upon completion of the regionalization, the Facility will provide tertiary treatment for up to 6.7 MGD. This Order includes requirements that must be met prior to an allowable increase in the flow rate to 6.7 MGD.

7. Compliance Schedules – Not Applicable

VIII. PUBLIC PARTICIPATION

The Central Valley Water Board is considering the issuance of WDRs that will serve as an NPDES permit for the Facility. As a step in the WDR adoption process, the Central Valley Water Board staff has developed tentative WDRs. The Central Valley Water Board encourages public participation in the WDR adoption process.

A. Notification of Interested Parties

The Central Valley Water Board has notified the Discharger and interested agencies and persons of its intent to prescribe waste discharge requirements for the discharge and has provided them with an opportunity to submit their written comments and recommendations. Notification was provided through the following the Appeal Democrat for one day.

B. Written Comments

The staff determinations are tentative. Interested persons are invited to submit written comments concerning these tentative WDRs. Comments must be submitted either in person or by mail to the Executive Office at the Central Valley Water Board at the address above on the cover page of this Order.

To be fully responded to by staff and considered by the Central Valley Water Board, written comments must be received at the Central Valley Water Board offices by 5:00 p.m. on **21 April 2012**.

C. Public Hearing

The Central Valley Water Board will hold a public hearing on the tentative WDRs during its regular Board meeting on the following date and time and at the following location:

Date: **7/8 June 2012**
Time: 8:30 a.m.
Location: Regional Water Quality Control Board, Central Valley Region
11020 Sun Center Dr., Suite #200
Rancho Cordova, CA 95670

Interested persons are invited to attend. At the public hearing, the Central Valley Water Board will hear testimony, if any, pertinent to the discharge, WDRs, and permit. Oral testimony will be heard; however, for accuracy of the record, important testimony should be in writing.

Please be aware that dates and venues may change. Our Web address is www.waterboards.ca.gov/centralvalley where you can access the current agenda for changes in dates and locations.

D. Waste Discharge Requirements Petitions

Any aggrieved person may petition the State Water Board to review the decision of the Central Valley Water Board regarding the final WDRs. The petition must be submitted within 30 days of the Central Valley Water Board's action to the following address:

State Water Resources Control Board
Office of Chief Counsel
P.O. Box 100, 1001 I Street
Sacramento, CA 95812-0100

E. Information and Copying

The Report of Waste Discharge, related documents, tentative effluent limitations and special provisions, comments received, and other information are on file and may be inspected at the address above at any time between 8:30 a.m. and 4:45 p.m., Monday through Friday. Copying of documents may be arranged through the Central Valley Water Board by calling (916) 464-3291.

F. Register of Interested Persons

Any person interested in being placed on the mailing list for information regarding the WDRs and NPDES permit should contact the Central Valley Water Board, reference this Facility, and provide a name, address, and phone number.

G. Additional Information

Requests for additional information or questions regarding this order should be directed to Joshua Palmer at (916) 464-4674.

ATTACHMENT G - SUMMARY OF REASONABLE POTENTIAL ANALYSIS

Constituent	Units	MEC	B	C	CMC	CCC	Water & Org	Org. Only	Basin Plan	MCL	Reasonable Potential
Aluminum, Total Recoverable	µg/L	190	NA	316	750[1]	316[2]	--	--	--	200	No
Ammonia Nitrogen, Total (as N)	mg/L	36	NA	2.41	5.62[1]	6.03[3]/2.41[4]	--	--	--	--	Yes
Anthracene	µg/L	26	<0.03	9,600	--	--	9,600	110,000	--	--	No[5]
Antimony, Total Recoverable	µg/L	0.15	<0.1	6	--	--	14	4,300	--	6	No
Arsenic, Total Recoverable	µg/L	0.64	0.82	10	340	150	--	--	--	10	No
Asbestos	Fibers/L	2.2	<0.2	7,000,000	--	--	7,000,000	--	--	7,000,000	No
Benzo(a)Anthracene	µg/L	9.9	<0.025	0.0044	--	--	0.0044	0.049	--	--	No[5]
Benzo(a)Pyrene	µg/L	7.9	0.07	0.0044	--	--	0.0044	0.049	--	0.2	No[5]
Benzo(b)Fluoranthene	µg/L	9.5	<0.025	0.0044	--	--	0.0044	0.049	--	--	No[5]
Benzo(ghi)Perylene	µg/L	2.6	<0.03	--	--	--	--	--	--	--	No[5]
Benzo(k)Fluoranthene	µg/L	9.0	<0.025	0.0044	--	--	0.0044	0.049	--	--	No[5]
Bis (2-Ethylhexyl) Phthalate	µg/L	16	<0.95	1.8	--	--	1.8	5.9	--	4	Yes
Bromoform	µg/L	0.29	<0.13	4.3	--	--	4.3	360	--	80	No
Carbon Tetrachloride	µg/L	3.5	<0.15	0.25	--	--	0.25	4.4	--	0.5	Yes
Chloride	mg/L	85	NA	106[6]	--	--	--	--	--	250	No
Chloroform	µg/L	3.7	<0.17	80	--	--	--	--	--	80[7]	No

Constituent	Units	MEC	B	C	CMC	CCC	Water & Org	Org. Only	Basin Plan	MCL	Reasonable Potential
Chromium, Total Recoverable	µg/L	0.55[8]	0.72[8]	50	--	--	--	--	--	50	No
Chromium (VI), Total Recoverable	µg/L	<0.005	<5.0	11	16	11	--	--	--	50	No
Chrysene	µg/L	8.8	<0.03	0.0044	--	--	0.0044	0.049	--	--	No[5]
cis-1,2-Dichloroethene	µg/L	<0.2	<0.2	6.0	--	--	--	--	--	6.0	No
Copper, Total Recoverable	µg/L	14	1.4	9.4[9]/3.1[10]	14[9]/4.2[10]	9.4[9]/3.1[10]	1,300	--	--	1,000	Yes
Cyanide, Total (as CN)	µg/L	<0.005	<2.0	5.2	22	5.2	700	220,000	--	150	No
Dibenzo(a,h)Anthracene	µg/L	3.7	<0.03	0.0044	--	--	0.0044	0.049	--	--	No[5]
Diazinon	µg/L	<0.009	NA	0.10	--	--	--	--	0.10	--	No[11]
Dichlorobromomethane	µg/L	0.9	<0.16	0.56	--	--	0.56	46	--	80	Yes
Diethyl Phthalate	µg/L	0.6	<0.86	23,000	--	--	23,000	120,000	--	--	No
Electrical Conductivity @ 25°C	µmhos/cm	834	117	150	--	--	--	--	150	900	Yes
Fluoranthene	µg/L	15	<0.03	300	--	--	300	370	--	--	No[5]
Fluorene	µg/L	6.2	<0.03	1,300	--	--	1,300	14,000	--	--	No[5]
Indeno (1,2,3-cd) Pyrene	µg/L	9.5	0.08	0.0044	--	--	0.0044	0.049	--	--	No[5]
Iron, Total Recoverable	µg/L	191[8]	NA	300	--	--	--	--	--	300	No
Lead, Total Recoverable	µg/L	0.76	0.11	2.7[9]/0.63[10]	70[9]/16[10]	2.7[9]/0.63[10]	--	--	--	15	No
Manganese, Total Recoverable	µg/L	75[8]	31[12]	50	--	--	--	--	--	50	Yes

Constituent	Units	MEC	B	C	CMC	CCC	Water & Org	Org. Only	Basin Plan	MCL	Reasonable Potential
Mercury, Total Recoverable	µg/L	0.035	0.001	0.05	--	--	0.050	0.051	--	2.0	No[13]
Methoxychlor	µg/L	<0.0024	NA	30	--	--	--	--	--	30	No
Methyl Chloride	µg/L	<0.27	0.89	--	--	--	--	--	--	--	No
Methylene Blue Activated Substances	µg/L	860[8]	<100	500	--	--	--	--	--	500	Yes
Naphthalene	µg/L	1.1	<0.03	--	--	--	--	--	--	--	No
Nickel, Total Recoverable	µg/L	1.5	0.82	53[9]/18[10]	473[9]/160[10]	53[9]/18[10]	610	4,600	--	100	No
Nitrate Nitrogen, Total (as N)	mg/L	2.2	NA	10	--	--	--	--	--	10	No
Nitrite Nitrogen, Total (as N)	mg/L	0.8	NA	1.0	--	--	--	--	--	1.0	No
Phenanthrene	µg/L	17	<0.03	--	--	--	--	--	--	--	No
Phosphorus	µg/L	4,500	NA	--	--	--	--	--	--	--	No
Pyrene	µg/L	10	<0.03	960	--	--	960	11,000	--	--	No
Selenium, Total Recoverable	µg/L	0.3	<0.1	5	20	5	--	--	--	20	No
Silver, Total Recoverable	µg/L	0.23	<0.1	2.5[9]/0.45[10]	2.5[9]/0.45[10]	2.5[9]/0.45[10]	--	--	--	100	No
Tetrachloroethene	µg/L	<0.17	<0.17	0.8	--	--	0.8	8.85	--	5.0	No
Thiobencarb	µg/L	<0.03	NA	1.0	--	--	--	--	--	1.0	No
Toluene	µg/L	4.8	<0.19	6,800	--	--	6,800	200,000	--	150	No
Total Dissolved Solids	mg/L	449	NA	450[6]	--	--	--	--	--	500	No

Constituent	Units	MEC	B	C	CMC	CCC	Water & Org	Org. Only	Basin Plan	MCL	Reasonable Potential
Zinc, Total Recoverable	µg/L	58	4.5	120.8[9]/40.7[10]	120.8[9]/40.8[10]	120.8[9]/40.7[10]	--	--	--	5,000	No

General Note: All inorganic concentrations are given as a total recoverable.

MEC = Maximum Effluent Concentration

B = Maximum Receiving Water Concentration or lowest detection level, if non-detect

C = Criterion used for Reasonable Potential Analysis

CMC = Criterion Maximum Concentration (CTR or NTR)

CCC = Criterion Continuous Concentration (CTR or NTR)

Water & Org = Human Health Criterion for Consumption of Water & Organisms (CTR or NTR)

Org. Only = Human Health Criterion for Consumption of Organisms Only (CTR or NTR)

Basin Plan = Numeric Site-specific Basin Plan Water Quality Objective

MCL = Drinking Water Standards Maximum Contaminant Level

NA = Not Available

ND = Non-detect

Footnotes:

(1) USEPA National Recommended Ambient Water Quality Criteria, Freshwater Aquatic Life Protection, 1-hour Average.

(2) Recalculated chronic criterion based on the methodologies from the Arid West Technical Report using the minimum receiving water hardness value of 28 mg/L.

(3) USEPA National Recommended Ambient Water Quality Criteria, Freshwater Aquatic Life Protection, 4-day Average.

(4) USEPA National Recommended Ambient Water Quality Criteria, Freshwater Aquatic Life Protection, 30-day Average

(5) Pollutant does not exhibit reasonable potential to cause or contribute to an exceedance of water quality objectives. See section IV.C.3.b of the Fact Sheet (Attachment F).

(6) Water Quality for Agriculture.

(7) Criterion applies to total trihalomethanes, which includes chloroform.

(8) Represents the maximum observed annual average concentration for comparison with the MCL.

(9) Criterion to be compared to the maximum effluent concentration.

(10) Criterion to be compared to the maximum upstream receiving water concentration.

(11) As discussed further in Section IV.C.3.c of the Fact Sheet (Attachment F), an effluent limitation for diazinon and chlorpyrifos is established in accordance with the Total Maximum Daily Load for the Feather River.

(12) Represents the maximum observed annual average upstream receiving water concentration based on data collected between January 2002 and December 2002.

(13) The Feather River is listed on the 2010 303(d) list as impaired for mercury. Therefore, this Order establishes a final mass loading limitation for mercury.

ATTACHMENT H - CALCULATION OF WQBELS

Parameter	Units	Most Stringent Criteria			HH Calculations[1]			Aquatic Life Calculations[2]											Final Effluent Limitations	
		HH	CMC	CCC	ECA_{HH} = $AMEL_{HH}$	AMEL/MDEL $Multiplier_{HH}$	$MDEL_{HH}$	ECA_{acute}	ECA $Multiplier_{acute}$	LTA_{acute}	$ECA_{chronic}$	ECA $Multiplier_{chronic}$	$LTA_{chronic}$	Lowest LTA	AMEL $Multiplier_{95}$	$AMEL_{AL}$	MDEL $Multiplier_{99}$	$MDEL_{AL}$	Lowest AMEL	Lowest MDEL
Ammonia Nitrogen, Total (as N)	mg/L	--	5.62	2.41	--	--	--	5.62	0.63	3.5	2.4	0.92	2.2	2.2	1.1	2.4	1.6	3.5	2.4	3.5
Bis (2-Ethylhexyl) Phthalate	µg/L	1.8	--	--	297	1.84	545	--	--	--	--	--	--	--	--	--	--	--	18[3]	24[3]
Carbon Tetrachloride	µg/L	0.25	--	--	35	2.01	70	--	--	--	--	--	--	--	--	--	--	--	7.5[3]	11[3]
Copper, Total Recoverable	µg/L	1,300	14[4]/4.2[5]	9.4[4]/3.1[5]	350,000	2.01	700,000	14[4]	0.60	8.5	9.4[4]	0.77	7.2	7.2	1.2	8.7	1.7	12	8.7	12
Dichlorobromomethane	µg/L	0.56	--	--	139	1.81	253	--	--	--	--	--	--	--	--	--	--	--	22[3]	32[3]

1 As described in section IV.C.2.c of the Fact Sheet (Attachment F), calculation of effluent limitations for the protection of human health are determined using a dilution credit of 347.

2 As described in section IV.C.2.c of the Fact Sheet (Attachment F), calculation of effluent limitations for the protection of aquatic life are determined without the allowance of dilution credits.

3 As described further in section IV.C.3.c of the Fact Sheet (Attachment F), because effluent limitations may only be as high as is justified under State and federal antidegradation policies, this Order establishes performance-based effluent limitations.

4 Criterion to be compared to the maximum effluent concentration.

5 Criterion to be compared to the maximum receiving water concentration.

6 ECA determined as described in section IV.C.2.e of the Fact Sheet (Attachment F).

ATTACHMENT I - EFFLUENT AND RECEIVING WATER CHARACTERIZATION STUDY

I. **Background.** Sections 2.4.1 through 2.4.4 of the SIP provide minimum standards for analyses and reporting. (Copies of the SIP may be obtained from the State Water Resources Control Board, or downloaded from http://www.waterboards.ca.gov/iswp/index.html). To implement the SIP, effluent and receiving water data are needed for all priority pollutants. Effluent and receiving water pH and hardness are required to evaluate the toxicity of certain priority pollutants (such as heavy metals) where the toxicity of the constituents varies with pH and/or hardness. Section 3 of the SIP prescribes mandatory monitoring of dioxin congeners. In addition to specific requirements of the SIP, the Central Valley Water Board is requiring the following monitoring:

A. **Drinking water constituents**. Constituents for which drinking water Maximum Contaminant Levels (MCLs) have been prescribed in the California Code of Regulation are included in the *Water Quality Control Plan, Fourth Edition, for the Sacramento and San Joaquin River Basins* (Basin Plan). The Basin Plan defines virtually all surface waters within the Central Valley Region as having existing or potential beneficial uses for municipal and domestic supply. The Basin Plan further requires that, at a minimum, water designated for use as domestic or municipal supply shall not contain concentrations of chemical constituents in excess of the MCLs contained in the California Code of Regulations.

B. **Effluent and receiving water temperature.** This is both a concern for application of certain temperature-sensitive constituents, such as fluoride, and for compliance with the Basin Plan's thermal discharge requirements.

C. **Effluent and receiving water hardness and pH.** These are necessary because several of the CTR constituents are hardness and pH dependent.

II. **Monitoring Requirements.**

A. **Annual and Semi-Annual Monitoring**. Annual and semi-annual priority pollutant samples shall be collected from the effluent and upstream receiving water (EFF-001 and RSW-001) and analyzed for the constituents listed in Table I-1. Annual and semi-annual effluent monitoring shall be conducted at Monitoring Location EFF-001. The Discharger shall conduct annual receiving water monitoring for priority pollutants at Monitoring Locations RSW-001. The results of such monitoring shall be submitted to the Central Valley Water Board in accordance with the schedule listed in Table E-10. Each individual monitoring event shall provide representative sample results for the effluent and upstream receiving water.

B. **Concurrent Sampling.** Effluent and receiving water sampling shall be performed at approximately the same time, on the same date.

C. **Sample type.** All effluent samples shall be taken as 24-hour flow proportioned composite samples. All receiving water samples shall be taken as grab samples.

Table I-1. Priority Pollutants

CTR #	Constituent	CAS Number	Criterion Quantitation Limit µg/L or noted	Suggested Test Methods
28	1,1-Dichloroethane	75343	0.5	EPA 8260B
30	1,1-Dichloroethene	75354	0.5	EPA 8260B
41	1,1,1-Trichloroethane	71556	0.5	EPA 8260B
42	1,1,2-Trichloroethane	79005	0.5	EPA 8260B
37	1,1,2,2-Tetrachloroethane	79345	0.5	EPA 8260B
75	1,2-Dichlorobenzene	95501	0.5	EPA 8260B
29	1,2-Dichloroethane	107062	0.5	EPA 8260B
	cis-1,2-Dichloroethene	156592	0.5	EPA 8260B
31	1,2-Dichloropropane	78875	0.5	EPA 8260B
101	1,2,4-Trichlorobenzene	120821	0.5	EPA 8260B
76	1,3-Dichlorobenzene	541731	0.5	EPA 8260B
32	1,3-Dichloropropene	542756	0.5	EPA 8260B
77	1,4-Dichlorobenzene	106467	0.5	EPA 8260B

CTR #	Constituent	CAS Number	Criterion Quantitation Limit µg/L or noted	Suggested Test Methods
17	Acrolein	107028	2	EPA 8260B
18	Acrylonitrile	107131	2	EPA 8260B
19	Benzene	71432	0.5	EPA 8260B
20	Bromoform	75252	0.5	EPA 8260B
34	Bromomethane	74839	1	EPA 8260B
21	Carbon tetrachloride	56235	0.5	EPA 8260B
22	Chlorobenzene (mono chlorobenzene)	108907	0.5	EPA 8260B
24	Chloroethane	75003	0.5	EPA 8260B
25	2- Chloroethyl vinyl ether	110758	1	EPA 8260B
26	Chloroform	67663	0.5	EPA 8260B
35	Chloromethane	74873	0.5	EPA 8260B
23	Dibromochloromethane	124481	0.5	EPA 8260B
27	Dichlorobromomethane	75274	0.5	EPA 8260B
36	Dichloromethane	75092	0.5	EPA 8260B
33	Ethylbenzene	100414	0.5	EPA 8260B
88	Hexachlorobenzene	118741	1	EPA 8260B
89	Hexachlorobutadiene	87683	1	EPA 8260B
91	Hexachloroethane	67721	1	EPA 8260B
94	Naphthalene	91203	10	EPA 8260B
38	Tetrachloroethene	127184	0.5	EPA 8260B
39	Toluene	108883	0.5	EPA 8260B
40	trans-1,2-Dichloroethylene	156605	0.5	EPA 8260B
43	Trichloroethene	79016	0.5	EPA 8260B
44	Vinyl chloride	75014	0.5	EPA 8260B
	Methyl-tert-butyl ether (MTBE)	1634044	0.5	EPA 8260B
	Trichlorofluoromethane	75694	5	EPA 8260B
	1,1,2-Trichloro-1,2,2-Trifluoroethane	76131	10	EPA 8260B
	Styrene	100425	0.5	EPA 8260B
	Xylenes	1330207	0.5	EPA 8260B
60	1,2-Benzanthracene	56553	5	EPA 8270C
85	1,2-Diphenylhydrazine	122667	1	EPA 8270C
45	2-Chlorophenol	95578	2	EPA 8270C

CTR #	Constituent	CAS Number	Criterion Quantitation Limit µg/L or noted	Suggested Test Methods
46	2,4-Dichlorophenol	120832	1	EPA 8270C
47	2,4-Dimethylphenol	105679	2	EPA 8270C
49	2,4-Dinitrophenol	51285	5	EPA 8270C
82	2,4-Dinitrotoluene	121142	5	EPA 8270C
55	2,4,6-Trichlorophenol	88062	10	EPA 8270C
83	2,6-Dinitrotoluene	606202	5	EPA 8270C
50	2-Nitrophenol	25154557	10	EPA 8270C
71	2-Chloronaphthalene	91587	10	EPA 8270C
78	3,3'-Dichlorobenzidine	91941	5	EPA 8270C
62	3,4-Benzofluoranthene	205992	10	EPA 8270C
52	4-Chloro-3-methylphenol	59507	5	EPA 8270C
48	4,6-Dinitro-2-methylphenol	534521	10	EPA 8270C
51	4-Nitrophenol	100027	5	EPA 8270C
69	4-Bromophenyl phenyl ether	101553	10	EPA 8270C
72	4-Chlorophenyl phenyl ether	7005723	5	EPA 8270C
56	Acenaphthene	83329	1	EPA 8270C
57	Acenaphthylene	208968	10	EPA 8270C
58	Anthracene	120127	10	EPA 8270C
59	Benzidine	92875	5	EPA 8270C
61	Benzo(a)pyrene (3,4-Benzopyrene)	50328	0.1	EPA 8270C
63	Benzo(g,h,i)perylene	191242	5	EPA 8270C
64	Benzo(k)fluoranthene	207089	2	EPA 8270C
65	Bis(2-chloroethoxy) methane	111911	5	EPA 8270C
66	Bis(2-chloroethyl) ether	111444	1	EPA 8270C
67	Bis(2-chloroisopropyl) ether	39638329	10	EPA 8270C
68	Bis(2-ethylhexyl) phthalate	117817	3	EPA 8270C
70	Butyl benzyl phthalate	85687	10	EPA 8270C
73	Chrysene	218019	5	EPA 8270C
81	Di-n-butylphthalate	84742	10	EPA 8270C
84	Di-n-octylphthalate	117840	10	EPA 8270C
74	Dibenzo(a,h)-anthracene	53703	0.1	EPA 8270C
79	Diethyl phthalate	84662	2	EPA 8270C
80	Dimethyl phthalate	131113	2	EPA 8270C

CTR #	Constituent	CAS Number	Criterion Quantitation Limit µg/L or noted	Suggested Test Methods
86	Fluoranthene	206440	10	EPA 8270C
87	Fluorene	86737	10	EPA 8270C
90	Hexachlorocyclopentadiene	77474	1	EPA 8270C
92	Indeno(1,2,3-c,d)pyrene	193395	0.05	EPA 8270C
93	Isophorone	78591	1	EPA 8270C
98	N-Nitrosodiphenylamine	86306	1	EPA 8270C
96	N-Nitrosodimethylamine	62759	5	EPA 8270C
97	N-Nitrosodi-n-propylamine	621647	5	EPA 8270C
95	Nitrobenzene	98953	10	EPA 8270C
53	Pentachlorophenol	87865	0.2	EPA 8270C
99	Phenanthrene	85018	5	EPA 8270C
54	Phenol	108952	1	EPA 8270C
100	Pyrene	129000	10	EPA 8270C
	Aluminum	7429905	50	EPA 6020/200.8
1	Antimony	7440360	5	EPA 6020/200.8
2	Arsenic	7440382	0.01	EPA 1632
15	Asbestos	1332214	0.2 MFL >10um	EPA/600/R-93/116(PCM)
	Barium	7440393	100	EPA 6020/200.8
3	Beryllium	7440417	1	EPA 6020/200.8
4	Cadmium	7440439	0.25	EPA 1638/200.8
5a	Chromium (total)	7440473	2	EPA 6020/200.8
5b	Chromium (VI)	18540299	0.5	EPA 7199/1636
6	Copper	7440508	0.5	EPA 6020/200.8
14	Cyanide	57125	5	EPA 9012A
	Fluoride	7782414	0.1	EPA 300
	Iron	7439896	100	EPA 6020/200.8
7	Lead	7439921	0.5	EPA 1638
8	Mercury	7439976	0.0002 (11)	EPA 1669/1631
	Manganese	7439965	20	EPA 6020/200.8
9	Nickel	7440020	5	EPA 6020/200.8
10	Selenium	7782492	5	EPA 6020/200.8
11	Silver	7440224	1	EPA 6020/200.8
12	Thallium	7440280	1	EPA 6020/200.8

CTR #	Constituent	CAS Number	Criterion Quantitation Limit µg/L or noted	Suggested Test Methods
	Tributyltin	688733	0.002	EV-024/025
13	Zinc	7440666	10	EPA 6020/200.8
110	4,4'-DDD	72548	0.02	EPA 8081A
109	4,4'-DDE	72559	0.01	EPA 8081A
108	4,4'-DDT	50293	0.01	EPA 8081A
112	alpha-Endosulfan	959988	0.02	EPA 8081A
103	alpha-Hexachlorocyclohexane (BHC)	319846	0.01	EPA 8081A
	Alachlor	15972608	1	EPA 8081A
102	Aldrin	309002	0.005	EPA 8081A
113	beta-Endosulfan	33213659	0.01	EPA 8081A
104	beta-Hexachlorocyclohexane	319857	0.005	EPA 8081A
107	Chlordane	57749	0.1	EPA 8081A
106	delta-Hexachlorocyclohexane	319868	0.005	EPA 8081A
111	Dieldrin	60571	0.01	EPA 8081A
114	Endosulfan sulfate	1031078	0.05	EPA 8081A
115	Endrin	72208	0.01	EPA 8081A
116	Endrin Aldehyde	7421934	0.01	EPA 8081A
117	Heptachlor	76448	0.01	EPA 8081A
118	Heptachlor Epoxide	1024573	0.01	EPA 8081A
105	Lindane (gamma-Hexachlorocyclohexane)	58899	0.019	EPA 8081A
119	PCB-1016	12674112	0.5	EPA 8082
120	PCB-1221	11104282	0.5	EPA 8082
121	PCB-1232	11141165	0.5	EPA 8082
122	PCB-1242	53469219	0.5	EPA 8082
123	PCB-1248	12672296	0.5	EPA 8082
124	PCB-1254	11097691	0.5	EPA 8082
125	PCB-1260	11096825	0.5	EPA 8082
126	Toxaphene	8001352	0.5	EPA 8081A
	Atrazine	1912249	1	EPA 8141A
	Bentazon	25057890	2	EPA 643/ 515.2
	Carbofuran	1563662	5	EPA 8318

CTR #	Constituent	CAS Number	Criterion Quantitation Limit µg/L or noted	Suggested Test Methods
	2,4-D	94757	10	EPA 8151A
	Dalapon	75990	10	EPA 8151A
	1,2-Dibromo-3-chloropropane (DBCP)	96128	0.01	EPA 8260B
	Di(2-ethylhexyl)adipate	103231	5	EPA 8270C
	Dinoseb	88857	2	EPA 8151A
	Diquat	85007	4	EPA 8340/ 549.1/HPLC
	Endothal	145733	45	EPA 548.1
	Ethylene Dibromide	106934	0.02	EPA 8260B/504
	Glyphosate	1071836	25	HPLC/EPA 547
	Methoxychlor	72435	10	EPA 8081A
	Molinate (Ordram)	2212671	2	EPA 634
	Oxamyl	23135220	20	EPA 8318/632
	Picloram	1918021	1	EPA 8151A
	Simazine (Princep)	122349	1	EPA 8141A
	Thiobencarb	28249776	1	HPLC/EPA 639
16	2,3,7,8-TCDD (Dioxin)	1746016	5.00E-06	EPA 8290 (HRGC) MS
	2,4,5-TP (Silvex)	93765	1	EPA 8151A
	Diazinon	333415	0.25	EPA 8141A/GCMS
	Chlorpyrifos	2921882	1	EPA 8141A/GCMS
	Ammonia (as N)	7664417		EPA 350.1
	Chloride	16887006		EPA 300.0
	Flow			
	Hardness (as $CaCO_3$)			EPA 130.2
	Foaming Agents (MBAS)			SM5540C
	Nitrate (as N)	14797558	2,000	EPA 300.0
	Nitrite (as N)	14797650	400	EPA 300.0
	pH		0.1	EPA 150.1
	Phosphorus, Total (as P)	7723140		EPA 365.3
	Specific conductance (EC)			EPA 120.1
	Sulfate		500	EPA 300.0
	Sulfide (as S)			EPA 376.2

CTR #	Constituent	CAS Number	Criterion Quantitation Limit µg/L or noted	Suggested Test Methods
	Sulfite (as SO_3)			SM4500-SO3
	Temperature			
	Total Dissolved Solids (TDS)			EPA 160.1

III. Additional Study Requirements

A. **Laboratory Requirements.** The laboratory analyzing the monitoring samples shall be certified by the Department of Health Services in accordance with the provisions of Water Code 13176 and must include quality assurance/quality control data with their reports (ELAP certified).

B. **Criterion Quantitation Limit (CQL).** The criterion quantitation limits will be equal to or lower than the minimum levels (MLs) in Appendix 4 of the SIP or the detection limits for purposes of reporting (DLRs) below the controlling water quality criterion concentrations summarized in Table I-1 of this Order. In cases where the controlling water quality criteria concentrations are below the detection limits of all approved analytical methods, the best available procedure will be utilized that meets the lowest of the MLs and DLR. Table I-1 contains suggested analytical procedures. The Discharger is not required to use these specific procedures as long as the procedure selected achieves the desired minimum detection level.

C. **Method Detection Limit (MDL**). The method detection limit for the laboratory shall be determined by the procedure found in 40 CFR Part 136, Appendix B (revised as of May 14, 1999).

D. **Reporting Limit (RL).** The reporting limit for the laboratory. This is the lowest quantifiable concentration that the laboratory can determine. Ideally, the RL should be equal to or lower than the CQL to meet the purposes of this monitoring.

E. Reporting Protocols. The results of analytical determinations for the presence of chemical constituents in a sample shall use the following reporting protocols:

1. Sample results greater than or equal to the reported RL shall be reported as measured by the laboratory (i.e., the measured chemical concentration in the sample).

2. Sample results less than the reported RL, but greater than or equal to the laboratory's MDL, shall be reported as "Detected, but Not Quantified," or DNQ. The estimated chemical concentration of the sample shall also be reported.

3. For the purposes of data collection, the laboratory shall write the estimated chemical concentration next to DNQ as well as the words "Estimated Concentration" (may shortened to "Est. Conc.). The laboratory, if such information is available, may include numerical estimates of the data quantity for the reported result. Numerical estimates of data quality may be percent accuracy (+ or - a percentage of the reported value), numerical ranges (low and high), or any other means considered appropriate by the laboratory.

4. Sample results that are less than the laboratory's MDL shall be reported as "Not Detected" or ND.

F. Data Format. The monitoring report shall contain the following information for each pollutant:

1. The name of the constituent.

2. Sampling location.

3. The date the sample was collected.

4. The time the sample was collected.

5. The date the sample was analyzed. For organic analyses, the extraction data will also be indicated to assure that hold times are not exceeded for prepared samples.
6. The analytical method utilized.
7. The measured or estimated concentration.
8. The required Criterion Quantitation Limit (CQL).
9. The laboratory's current Method Detection Limit (MDL), as determined by the procedure found in 40 CFR Part 136, Appendix B (revised as of May 14, 1999).
10. The laboratory's lowest reporting limit (RL).
11. Any additional comments