City of Stockton

CITY OF STOCKTON

Nitrate Removal Evaluation

FINAL REPORT

REGISTERED PROFESSIONAL ENGINEER
MICHAEL W. FALK
C 77787
6/30/15
CIVIL
STATE OF CALIFORNIA

April, 2014

HDR

2365 Iron Point Road, Suite 300
Folsom, CA 95630

TABLE OF CONTENTS

1.0 Background 1

2.0 Purpose 3

3.0 Flows and Loads 5

4.0 Background on Nitrogen Removal 6

5.0 Oxidation Ponds Operation 7

6.0 Description of Alternatives 8

6.1 Plant Drain Treatment 9
6.2 Alternative 1 – Expand Existing Filters to Provide Nitrogen Removal 14
6.3 Alternative 2 – Reroute Secondary Effluent to Nitrifying Biotowers Then Discharge to Wetlands 18
6.4 Alternative 3 – Recycle Nitrifying Biotower Effluent to the Headworks 22
6.5 Alternative 4 – High Rate A/B Stage Process 24

7.0 Non-Economic Comparison 29

8.0 Economic Comparison 29

8.1 Cost Estimate Disclaimer 29
8.2 Approach 29
8.3 Unit Cost Values 31
8.4 Net Present Value of Total Project and Operations and Maintenance Costs 31

9.0 Summary and Conclusions 33

LIST OF TABLES

Table 1. Design Flows and Loads * 6
Table 2. Plant Drain Treatment Facility Needs to Maintain 55 mgd ADWF Rated Capacity 11
Table 3. Alternative 1 – Expand the Filter Complex Facility Needs and Maintain 55 mgd ADWF Rated Capacity 17
Table 4. Alternative 2 – Expand the Filter Complex Facility Needs and Maintain 55 mgd ADWF Rated Capacity 21
Table 5. Alternative 4 – High Rate A/B Stage Process and Maintain 55 mgd ADWF Rated Capacity 27
Table 6. Technology Non-Economic Comparison Matrix 30
Table 7. Economic Evaluation Variables 31
Table 8. Total Project Capital, Operations and Maintenance, and Total Net Present Value Costs 32

LIST OF FIGURES

Figure 1. Aerial View of the City of Stockton Regional Water Control Facility 1
Figure 2. RWCF Main Facility, located east of the San Joaquin River 2
Figure 3. RWCF Tertiary Treatment Facility (Minus the Oxidation Ponds or Wetlands) 3
Figure 4. Process Flow Diagram for City of Stockton RWCF 4
Figure 5. Primary Biological Nitrogen Transformations 7
Figure 6. Current Plant Schematic Highlighting the Plant Drain Streams 10
Figure 7. Sequencing Batch Reactor Technology 11
Figure 8. Plant Drain Treatment Schematic 12
Figure 9. Alternative 1 Process Flow Diagram- Expand Existing Filters to Provide Nitrogen Removal 15
Figure 10. York River Plant (Hampton Roads Sanitation District) Denitrifying Filters Building 16
Figure 11. Methanol Feed Facility at the York River WWTP (Hampton Roads Sanitation District) 18
Figure 12. Alternative 2 Process Flow Diagram - Reroute Secondary Effluent to Nitrifying Biotowers Then Discharge to Wetlands 20
Figure 13. Alternative 3 Process Flow Diagram - Recycle Nitrifying Biotower Effluent to the Headworks 23
Figure 14. Alternative 4 Process Flow Diagram – High Rate A/B Stage Process 25
Figure 15. Hampton Roads Sanitation District A-Stage Pilot (Reactor on Left; Clarifier on Right) 28

APPENDICES

Appendix A – Emerging Plant Drain Treatment (DEMON®)

Appendix B – High Rate A/B Stage Activated Sludge Process

Appendix C – Cost Estimate

LIST OF ABBREVIATIONS

ADWF	Average Dry Weather Flow
AD	Anaerobic Digestion
ANAMMOX	Anaerobic Ammonia Oxidation
BFP	Belt Filter Press
BOD	Biochemical Oxygen Demand
CCB	Chlorine Contact Basin
City	City of Stockton
Cl2	Chlorine
d	Day
DAF	Dissolved Air Flotation
DEMON	Deammonification
ENR	Engineering-News Record
gal	Gallon
GBT	Gravity Belt Thickener
GHG	Greenhouse Gas
gpd	gallons per day
gpm	gallons per minute
GTH	Gravity Thickener
hr	Hour
hp	Horsepower
kWh	Kilowatt hour
L	Liter
lb	Pound
MeOH	Methanol
mg	Milligrams
MG	Million Gallon
mg/L	million gallons per liter
mgd	million gallons per day
N	Nitrogen
NBT	Nitrifying BioTowers
NH3	Ammonia
NH4	Ammonium
NH4-N	Ammonia
NO3-N	Nitrate
NPDES	National Pollution Discharge Elimination System
NSBR	Nitrifying Sequencing Batch Reactor
NBT	Nitrifying BioTowers
O&M	Operations and Maintenance
P	Phosphorus
pH	Degree of Acidity or Alkalinity
RWQCB	Regional Water Quality Control Board
SBR	Sequencing Batch Reactor

SBTs	Secondary BioTowers
scfm	Standard Cubic Feet per Minute
sf	square foot
SRT	Solids Retention Time
TKN	Total Kjeldahl as Nitrogen
TM	Technical Memorandum
tpd	tons per day
TSS	Total Suspended Solids

NITRATE REMOVAL EVALUATION

Nitrate Removal Alternatives - Treatment Cost Evaluation ***April, 2014***

Reviewed by: JB Neethling, Ph.D., P.E.; Rob Williams, PE; Holly Kennedy, PE

Prepared by: Mike Falk, PhD, PE; J. Gabriel Perigault, PhD, PE; Irina Lukicheva, PhD

1.0 Background

The City of Stockton owns and operates the City of Stockton Regional Wastewater Control Facility (RWCF). The RWCF provides wastewater treatment services to the City of Stockton, the Port of Stockton, and surrounding urbanized San Joaquin County areas. The RWCF serves a population of approximately 326,000 and it has a 55 mgd average dry weather flow (ADWF) rated capacity that discharges to the San Joaquin River. The current average annual flow rate is approximately 33 mgd. An aerial view of the RWCF is provided in Figure 1.

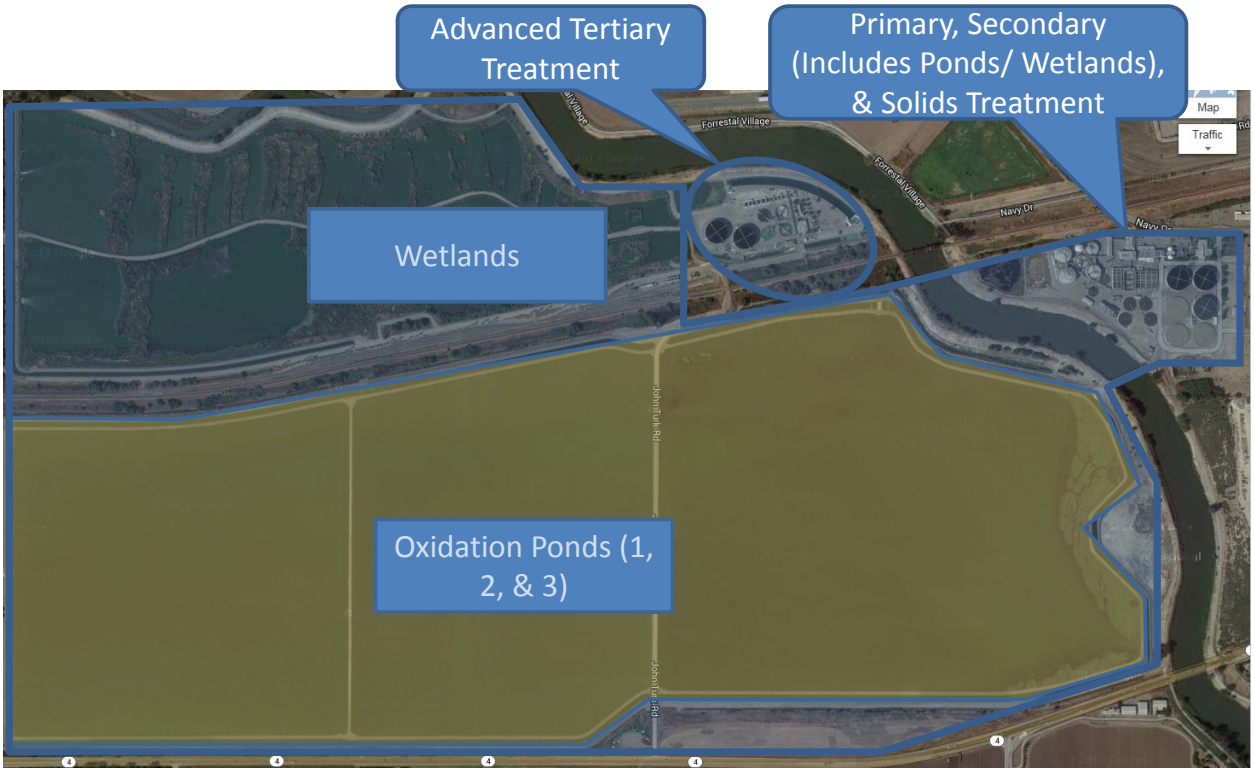

Figure 1. Aerial View of the City of Stockton Regional Water Control Facility

The RWCF discharges treated water to the San Joaquin River. This discharge is currently regulated by the Waste Discharge Requirements issued with Order No. R5-2008-0154 (NPDES No. CA0079138), adopted by the Regional Board on October 28, 2008.

Proposed new Waste Discharge Requirements in the form of a Tentative Order was released for review in March 2014. The Tentative Order includes proposed new nitrate limits that are more stringent than current limits.

The San Joaquin River traverses the City of Stockton RWCF creating two separate treatment areas. The Main Facility, shown in Figure 2, is situated east of the river and includes primary and a portion of secondary treatment, as well as sludge handling, dewatering, and hauling. Primary treatment includes screening, grit removal, pumping and primary sedimentation. Secondary treatment processes feature high rate trickling filters, secondary clarifiers, oxidation ponds, and the wetlands. Sludge is removed from the primary sedimentation process and routed to gravity thickeners; secondary sludge is routed by gravity to gravity belt thickeners; both are subsequently pumped to anaerobic digesters. After digestion, biosolids are routed to a belt filter press for dewatering. Sludge lagoons are available as temporary storage when dewatering is off-line. Dewatered biosolids are removed by a private contractor off-site for agricultural reuse.

Figure 2. RWCF Main Facility, located east of the San Joaquin River

The Tertiary Treatment Facility is located west of the river as shown in Figure 3.

From the Main Facility, clarifier effluent is piped under the San Joaquin River to the oxidation ponds and wetlands prior to entering the Tertiary Treatment Facility (see Figure 1), The Tertiary Treatment Facility consists of two nitrifying biotowers, dissolved air flotation, mixed-media filters, and chlorination/dechlorination facilities. The facultative ponds that feed the wetlands and Tertiary Treatment Plant are operated in two modes that impacts the Tertiary

Treatment Plant operation. Clockwise is the typical normal operating mode and is used when the ammonia is > 30 mg/L or cBOD is > 50 mg/L; secondary effluent flows through Ponds 1, 2, and 3 in series. Counter Clockwise mode is used when secondary effluent Ammonia is < 30 mg/L and cBOD is < 50 mg/L; secondary effluent flows through Pond 1 from north-to-south and ponds 2 & 3 from south-to-north as parallel treatment. A cold weather supply system has been added to feed the nitrifying biotowers (NBTs) warmer water in the cold winter months to enhance nitrifying bacterial activity in the NBTs.

Figure 3. RWCF Tertiary Treatment Facility (Minus the Oxidation Ponds or Wetlands)

The process flow diagram of the liquid, solid, and gas streams is presented in Figure 4.

2.0 Purpose

The purpose of this report is to perform a desktop study that evaluates nitrate removal alternatives to meet the Tentative Order 10 mg NO3-N/L for average monthly limits.

These limits are draft and thus subject to change until the permit is adopted. The desktop study considered four treatment alternatives, including one of the alternatives listed in the RWCF's Capital Improvement and Energy Management Plan (CIEMP) prepared by Carollo Engineers, dated August 2011.[1]

For each alternative, the evaluation included development of a process description, facility needs, a listing of advantages and disadvantages, and planning-level cost estimates. The planning-level cost estimates include capital, energy, and chemical costs.

[1] Carollo Engineers (2011) Capital Improvement and Energy Management Plan (CIEMP). Prepared for the City of Stockton Regional Wastewater Control Facility.

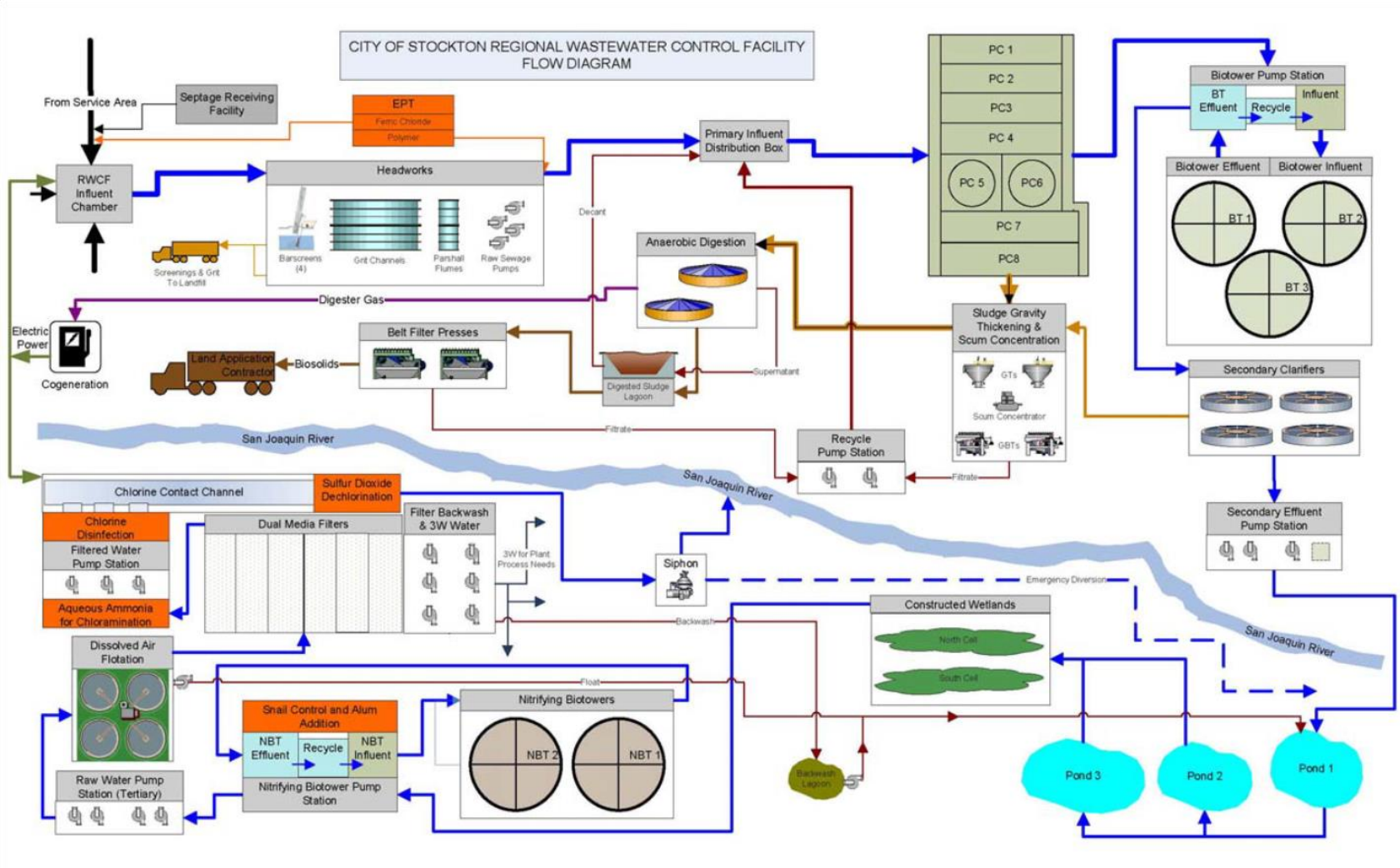

Figure 4. Process Flow Diagram for City of Stockton RWCF[2]

[2] Source: Regional Board Order No. R5-2008-0154

The specific objectives of the study include:

- Develop assumptions on design flows and loads with City staff based on recent RWCF improvements.
- Evaluate four alternatives with and without the option of plant drain treatment:
  - Alternative 1- Expand the existing filters to perform nitrogen removal.
  - Alternative 2- Reroute the main plant flow so that wetlands are placed downstream of the nitrifying biotowers (NBTs). This alternative might require additional nitrogen removal polishing downstream in the filters.
  - Alternative 3 - Recycle NBT effluent to the trickling filter feed.
  - Alternative 4 – High Rate A/B Stage Activated Sludge Process

Each of these alternatives has two options:

- Option A: Do not provide treatment on the return drain streams (i.e., maintain the status quo). The return drain streams comprise the return flows from the solids handling which are currently returned to the primary clarifiers. These return streams include thickener filtrate, dewatering filtrate, dissolved air flotation (DAF) float (if added in the future), and filter backwash (if added in the future).
- Option B: Treat the return drain streams prior to blending with the main plant flow at the primaries.

Treatment of the drain flows returning to the front of the plant, sometimes referred to as side-stream treatment, would remove ammonia and produce nitrate to mitigate odor issues. This treatment could be accomplished by an activated sludge system such as a Sequencing Batch Reactor (SBR). Thus, a total eight potential configurations (4 alternatives with 2 options each) were considered in this study.

3.0 Flows and Loads

The flows and loads used in this study are tabulated in Table 1. The values included in this table were developed from information included in the CIEMP[1], current RWCF rated capacity (55 mgd ADWF), and discussions with City staff.

*Table 1. Design Flows and Loads **

Parameter	Units	Average Dry Weather Flow (ADWF)	Average Annual (AA)	Maximum Month (MM)	Peak Hour Dry Weather Flow (PHDWF)	Peak Hour Wet Weather Flow (PHWWF)
Flow	mgd	55	59.1	67.3	69.8	146.0
BOD5	lb/d	148,000	148,000	204,000	---	---
TSS	lb/d	129,000	129,000	183,000	---	---
NH4	lb N/d	13,000	13,000	15,000	---	---
TKN	lb N/d	20,000	20,000	23,000	---	---
BOD5	mg/L	323	301	364	---	---
TSS	mg/L	282	262	325	---	---
NH4	mg N/L	28	26	26	---	---
TKN	mg N/L	43	40	40	---	---

* Peaking Factors based on the CIEMP (2011) except the ADWF:AA

4.0 Background on Nitrogen Removal

The focus of this report is on the removal of nitrogen species: ammonia and nitrate. The removal of nitrogen during wastewater treatment is primarily achieved by (a) assimilation of nitrogen into biomass and (b) biochemical oxidation/reduction processes that convert organic nitrogen and ammonia to nitrogen gas through a two-step process. The two-step process is commonly referred to as nitrification and denitrification. The nitrogen cycle, illustrating portions of the nitrogen cycle is presented in Figure 5.

Nitrification is a two-step process (nitritation followed by nitratation) where ammonia ($NH3/NH_4^+$) is oxidized first to nitrite (NO_2^-), followed by nitrite oxidation to nitrate (NO_3^-) by nitrifying organisms (Figure 5). The two-step process is commonly referred to as nitrification. Overall, the process stoichiometry is as follows:

$$NH_4^+ + 2O_2 \rightarrow NO_3^- + H_2O + 2H^+ \quad (1)$$

Denitrification is a biological process where denitrifying bacteria reduce nitrate to nitrite, followed by subsequent reduction to nitrogen gas. Denitrification requires a carbon source (such as biochemical oxygen demand (BOD) or methanol) with the following stoichiometry:

$$6NO_3^- + 5CH_3OH + CO_2 \rightarrow 3N_{2(g)} + 6HCO_3^- + 7H_2O \quad (2)$$

Combined nitrification and denitrification configurations are used in activated sludge wastewater treatment plants to remove nitrogen. A more detailed discussion on nitrification/denitrification, as well as the various treatment configurations can be found in the WEF Nutrient Removal Manual (2010).

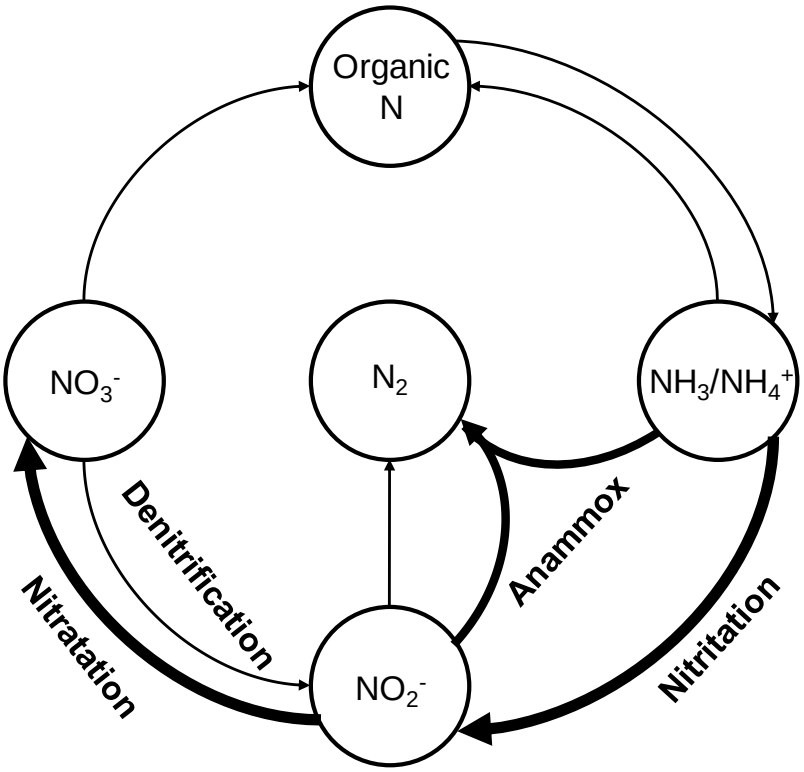

Figure 5. Primary Biological Nitrogen Transformations

5.0 Oxidation Ponds Operation

Historically, the oxidation ponds and wetlands have been leveraged to remove BOD, TSS, and metals at the plant. In short, the ponds perform treatment by converting BOD and nutrients into algae which is subsequently removed in the downstream wetlands, NBTs, DAF, and filter complex. The metals are taken up or sorbed by the biomass in the ponds. Additionally, the ponds dampen peak flows and thus the downstream advanced tertiary treatment facilities (i.e., NBTs, DAFs, and Filters) are sized for average annual conditions.

Although the ponds are effective at meeting current discharge limits, the algae load produced in the ponds must be removed in the downstream advanced tertiary treatment facility (i.e., wetlands, NBTs, DAFs, and Filters) to meet discharge limits. A portion of the algae can be removed in the wetlands by physical separation; however, the wetlands were channelized years back to resolve hydraulic issues and they only provide marginal algal removal. Any algal load not removed in the wetlands requires additional energy and intensive chemicals (specifically at the DAFs) on the downstream processes (NBTs, DAFs, and Filters).

The City is at a cross-roads with the ponds and wetlands where the ponds are nearing capacity with respect to biomass and the wetlands only provide marginal algal removal. It is recommended that the City evaluate strategies for managing the ponds and wetlands. Several different concepts for managing the ponds exist, including:

1. Maintain the status quo (operate the ponds and wetlands as is) – not recommended for the reasons listed above.

2. Dredge the ponds, rehabilitate the wetlands, and convey DAF/Filter backwash to the main plant instead of the ponds – this would free up capacity in the ponds, the wetlands could remove a larger portion of the algal load from the ponds, and sending DAF/Filter backwash to the plant drain would decouple the existing closed algae loop.

Dredge the ponds, route the flow around the ponds (except for off-spec water), and convey DAF/Filter backwash to the main plant instead of the ponds – this would reduce the algal load on the downstream processes, but it would require expansion of the downstream facilities to accommodate peak flows. Additionally, sending DAF/Filter backwash to the plant drain would decouple the existing closed algae loop.

3. Dredge the ponds and route the flow around the ponds, use ponds to store off-spec water, isolate a dredged pond for peak flow storage equalization, and convey DAF/Filter backwash to the main plant instead of the ponds - this would result in less energy and chemicals in the downstream processes than currently used and sending DAF/Filter backwash to the plant drain would decouple the existing closed algae loop.

Of the listed concepts, 2 or 4 are the most attractive. Concept 2 would leverage the passive natural treatment associated with the ponds and wetlands. However, it will still require energy and chemicals downstream to remove any algae not removed in the wetlands. The extent of energy and chemical reduction is unknown. However, the benefits of metals removal for meeting discharge limits will be maintained.

For concept 4, the pond channel could be used to convey water from the main plant to the advanced tertiary treatment facilities for day to day operations. For periods where the main plant produces off-spec water, the oxidation pond pumping station can be adjusted to send secondary clarifier effluent to the ponds. To dampen peak flows, a portion or all of a pond could be isolated and dredged for equalizing peak wet weather flows. There is sufficient basin volume in the ponds to accommodate maximum month storage. Although attractive, concept 4 would require levee construction to isolate, a liner, and gates/weirs to transfer water to and from the existing channel.

The alternatives described in the following Section are based on concept 2, as described above.

6.0 Description of Alternatives

The following subsections provide a description of each alternative for ammonia and nitrate removal, as well as the options for plant drain treatment which are included in each alternative.

6.1 Plant Drain Treatment

The plant drain return streams comprise the solids handling return streams (e.g., dewatering filtrate) as shown in Figure 6. Although the plant drain return streams only represent a fraction of the plant flow (about 1 percent), they represent about 15 to 25 percent of the nitrogen load within the plant. This large load is attributed to nitrogen release during biomass destruction in the anaerobic digester. The highly concentrated nitrogen stream is ideal for biological treatment as the nitrogen is concentrated and the water is warmer than the main plant. Warmer water translates to more rapid kinetics and thus a smaller facility footprint for treatment.

The value in treating the plant drain separately from the main plant is that it is more affordable than treating it blended with the main plant flow. Additionally, the ammonia is converted to a combination of nitrite and nitrate which can be used to mitigate odors at the headworks and primaries. The nitrite/nitrate serves as an electron acceptor for the oxidation of odorous sulfides to sulfate. The odor control from nitrite/nitrate is a two-step biological process as follows:

If nitrite is present, it requires 1.2 lb NO2-N/lb HS-S:

Step 1 → $$2NO_2^- + 3HS^- + H_2O = 5S + N_2 + 5OH^- \quad (3)$$

Step 2 → $$3S + 6NO_2^- = 3SO_4^{2-} + 3N_2 \quad (4)$$

If nitrate is present, it requires 0.7 lb NO3-N/lb HS-S:

Step 1 → $$2NO_3^- + 5HS^- + H_2O = 5S + N_2 + 7OH^- \quad (5)$$

Step 2 → $$5S + 6NO_3^- + 4OH^- = 5SO_4^{2-} + 3N_2 + 2H_2O \quad (6)$$

It is recommended that plant drain treatment effluent be conveyed to the headworks to mitigate odors which in turn will remove total nitrogen (refer to Equations 4 and 6) and reduce ferric demand at the headworks and primaries.

The SBR is a fill-and draw activated sludge system for wastewater treatment. In this system, wastewater is added to a single “batch” reactor, treated to remove pollutants, and then discharged. Equalization, aeration, and clarification can all be achieved using a single batch reactor. A picture of a SBR is provided in Figure 7.

The facility needs associated with the plant drain treatment are provided in Table 2. Besides the tankage required (about 1.0 MG), an aeration system (diffusers, blowers, air piping, blower building, etc.), alkalinity (assumed quicklime), and a decanter are required.

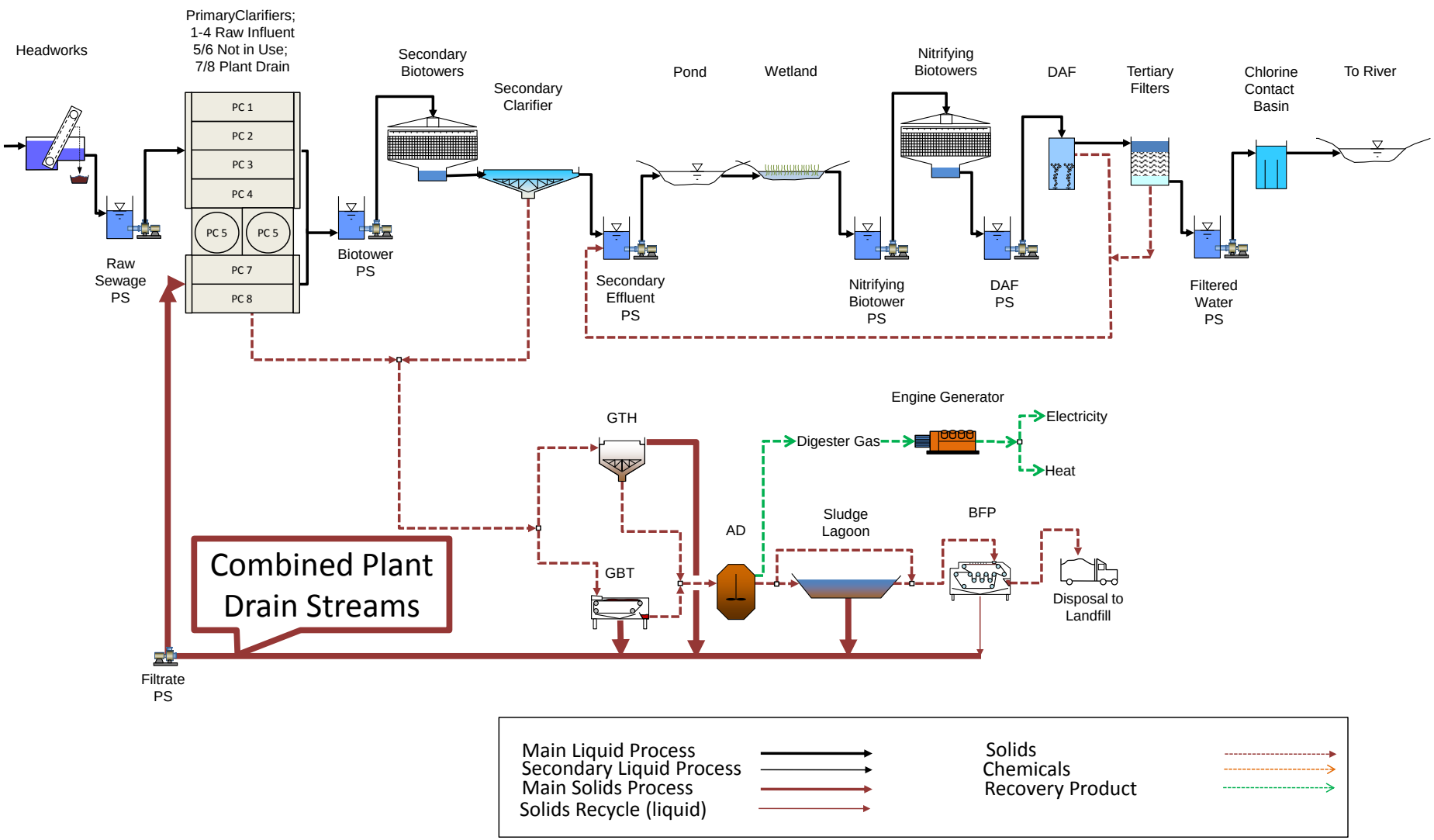

Figure 6. Current Plant Schematic Highlighting the Plant Drain Streams

Figure 7. Sequencing Batch Reactor Technology

Table 2. Plant Drain Treatment Facility Needs to Maintain 55 mgd ADWF Rated Capacity

Equipment	Unit	Value [a]
Construction		
Number of Tanks	No	2
Reactor Total Volume	MG	1.0
Decant rate	MG/Cycle	0.12
Oxygen Demand	lb/hr	800
Blower required	scfm	7,000
Blower Power	hp	400
Quicklime Volume	gal/hr	40
Oxidation Ponds EQ Basin	MG	62
Power		
Blower Power	hp	400
Chemicals		
Quicklime Demand	gal/hr	40
Footprint		
SBR	sf	10,000

a. Sized for average annual conditions at the 55 mgd ADWF rated capacity

The plant drain return streams are currently sent directly to primary clarifiers 7 and 8 (see Figure 6). Additionally, primary clarifiers 5 and 6 (i.e., Squirculars) are currently empty. The Squirculars (about 1.0 MG) could serve as the tankage for the plant drain SBRs. This strategy will leverage existing tankage and in turn reduce construction costs. A schematic of how the plant drain treatment would be configured is presented in Figure 8.

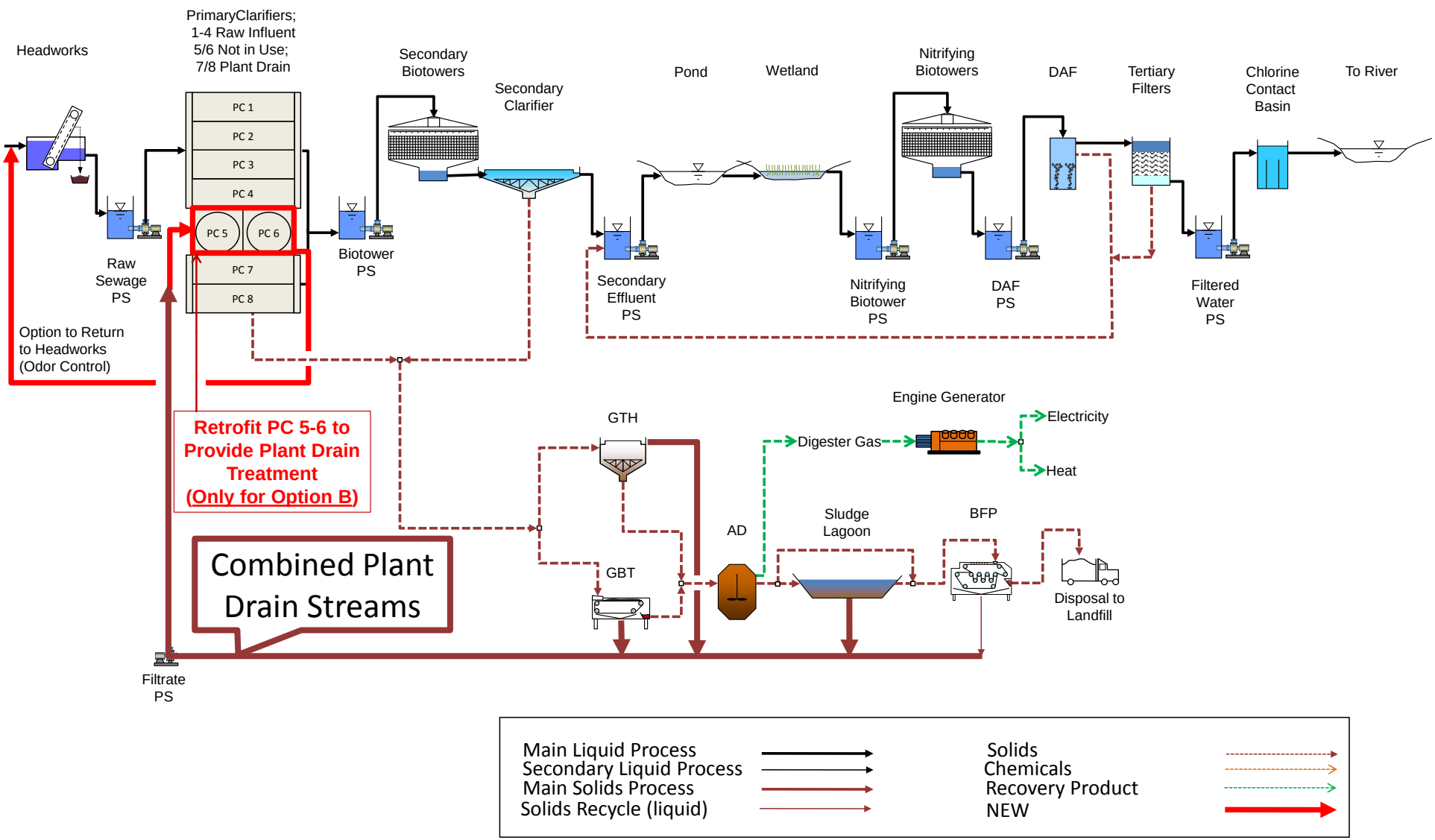

Figure 8. Plant Drain Treatment Schematic

The phasing for the plant drain treatment would be as follows:

- Phase I: Rehabilitate primary clarifiers 5 and 6 according to the CIEMP 2011
- Phase II: Retrofit primary clarifiers 5 and 6 (i.e., Squirculars) into a SBR by adding diffusers, blowers, air piping, mixers, pumps, and a decant mechanism.
- Phase III: Divert plant drain streams from primary clarifiers 7 and 8 to the SBRs housed in primary clarifiers 5 and 6.
- Phase IV: Provide a primary clarifier 5 and 6 effluent return line from the primaries to the headworks. This should assist in mitigating odors at the headworks and primaries.
- Phase V: Implement any of the Alternatives that are discussed in sections below.

The advantages and disadvantages associated with a SBR for plant drain treatment are as follows:

- Advantages:
  - Established technology
  - Aeration and clarification per train takes place in a single reactor (i.e., fewer tanks)
  - Operational flexibility and control
  - Minimal footprint
  - Potential capital savings by incorporation of separation/other equipment within common basin
  - Reduce ammonia load to the NBTs by about 20 percent
  - Can be constructed in existing primary clarifier tanks
  - Creates nitrate that can serve as an oxygen source for odor control in the main plant
- Disadvantages:
  - Alkalinity addition might be required
  - Oxygen transfer limitations govern the reactor volume
  - Heavy reliance on automated systems to control process
  - Potential of washing out non-settled biomass during the decant phase

There are several different established and emerging technologies for treating the plant drain return stream. The sequencing batch reactor (SBR) technology was selected for this evaluation as it is a proven technology with decades of experience. If the decision is made to implement

plant drain treatment, the City should consider the SBR technology and other potentially viable emerging technologies, such as deammonification (DEMON®). A more detailed discussion on DEMON® is provided in Appendix A.

6.2 Alternative 1 – Expand Existing Filters to Provide Nitrogen Removal

This alternative involves rehabilitating the wetlands and rehabilitating/expanding the filter complex as shown in Figure 9. The secondary clarifier effluent would be conveyed through the ponds and rehabilitated wetlands prior to being fed into the NBTs. The NBTs effluent would be routed through the DAFs, followed by the filters.

It is unclear if a third NBT would be required to meet the ammonia discharge limit. For current flows, a third NBT is not likely required with the wetlands rehabilitation, especially with the plant drain treatment option where the ammonia load is reduced by about 20 percent. The cost for a third NBT was not included in this analysis, but NBT performance should be monitored if this alternative is pursued.

The DAF chemical dose would be reduced compared to existing operation (about $1.8 million/year) as the algal concentration will be reduced by the rehabilitated wetlands. The current NBT effluent TSS concentration (about 40-60 mg/L) is relatively high, which is primarily attributed to the ponds algal load not currently removed in the wetlands. The extent of reduction in NBT effluent TSS from wetlands rehabilitation is unknown. For this conceptual level evaluation, it was assumed that the DAF chemical dose would be reduced by 50 percent. However, the extent of DAF chemical reduction is unknown and would require further testing.

The existing dual-media filters and their ancillary facilities would need to be rehabilitated as discussed in the CIEMP, 2011. Additionally, the filter complex would be expanded to provide surface loading rates conducive to denitrifying filters (about 2.5 gpm/sf). The existing filters are loading at 4.5 gpm/sf with one unit out of surface. A reduced loading rate is required to facilitate growth and attachment of denitrifying bacteria on filter media. Additionally, the filter media would most likely need to be changed to mono-media. An external carbon source is also required to meet the carbon requirements of denitrification as there is not sufficient carbon available in the filter feed.

A picture of a denitrifying filter complex from the York River wastewater plant at Hampton Roads Sanitation District (HRSD) is provided in Figure 10. In this example, the tertiary denitrifying filters have a 30 mgd average flow capacity. The filters are pump fed and the return flow is by gravity. The denitrifying filters are six foot deep TetraTech® filters with sand media. The filters use the TetraTech® patented underdrain process.

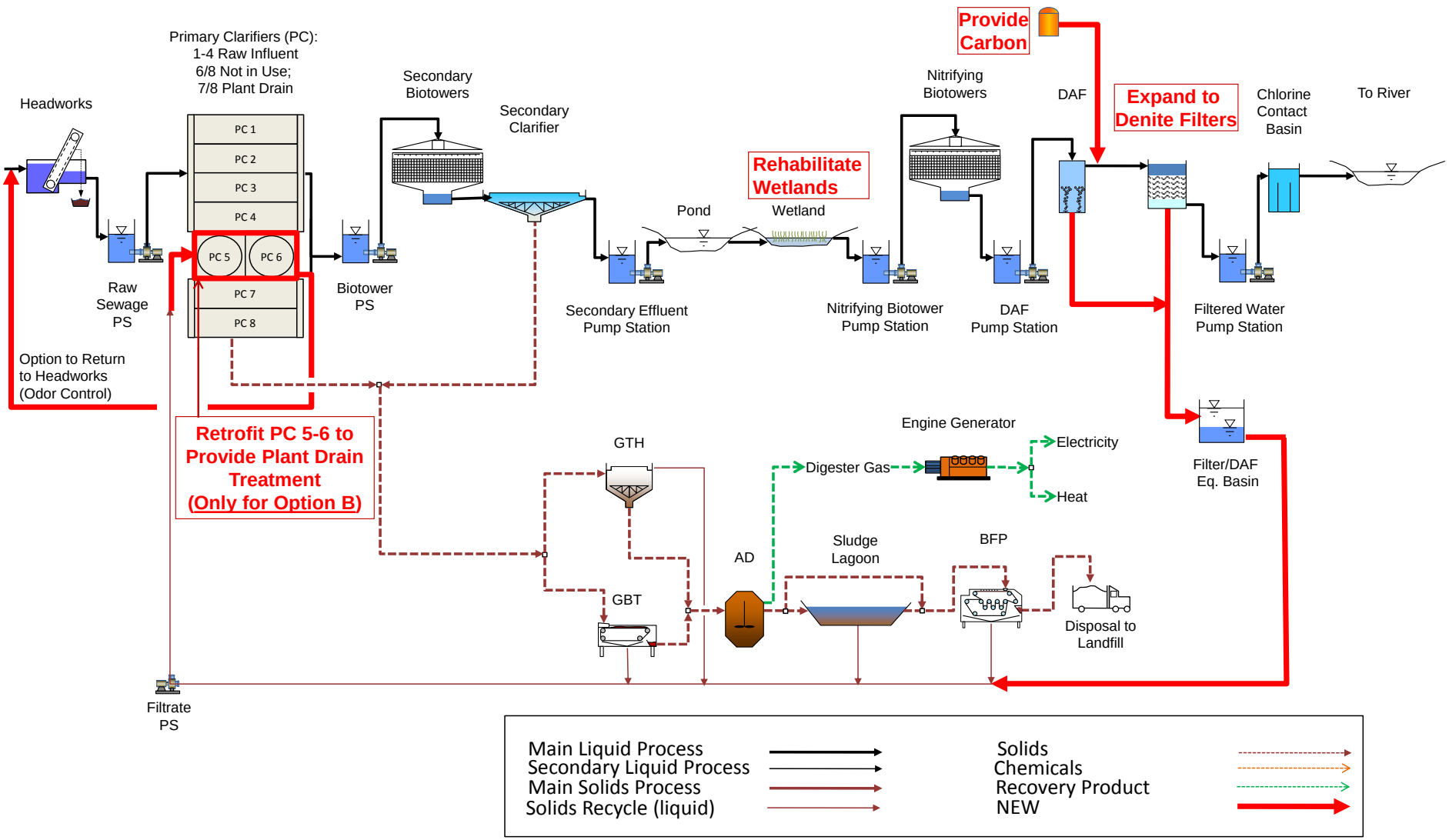

Figure 9. Alternative 1 Process Flow Diagram- Expand Existing Filters to Provide Nitrogen Removal

Figure 10. York River Plant (Hampton Roads Sanitation District) Denitrifying Filters Building

The DAF and filter backwash is currently returned to the oxidations ponds. Rather than convey these streams to the oxidation ponds, it is recommended that they be returned to the primaries. Otherwise, any algal load removed by the DAF/Filters would be returned back to the algal source (i.e., ponds) and perpetuate the problem. There is an existing pipeline from the advanced tertiary plant to the plant drain. In order to utilize this existing pipeline, it is recommended that the DAF and filter backwash streams be equalized and returned in this existing pipeline.

The facility needs associated with Alternative 1 (with and without Plant Drain Treatment) are provided in Table 2. The key facility needs include wetland rehabilitation, additional pumps at the DAF/Filter feed pump station to maintain the 55 mgd ADWF rated capacity, expansion of the filters to function as denitrifying filters, replacement of the filter media from dual- to mono-media, addition of the external carbon source facilities, the plant drain treatment (for Option B), addition of a DAF/filter backwash flow equalization tank, and rehabilitation of the appropriate facilities according to the CIEMP 2011.

Refer to Section 6.1 for a description on plant drain treatment and the corresponding phasing.

The advantages and disadvantages associated with Alternative 1 are as follows:

- Advantages:
  - Reliably meets the discharge N limits.
  - Proven technology.
  - Provides a final control point to meet nitrate target.
  - Process can be operated to achieve very low nitrate limits (below 1 mg N/L) if required. However, it requires additional carbon feed which is costly and creates safety concerns for operations.
  - Filters have the potential to remove both nitrogen and phosphorus simultaneously.

- Rehabilitating the wetlands and re-routing DAF/Filter backwash has the potential to reduce annual DAF chemical costs.
- Minimal changes to the existing plant.

- Disadvantages:
  - Produces more solids to be handled than if there was just nitrogen removal in the upstream processes.
  - Safety burden with the external carbon source (if methanol used).
  - Loading rate is reduced when operating as a denitrifying filter versus a conventional filter. This translates to more filter area and costs.
  - Operational costs for feed pumping and external carbon.
  - Complex controls.

Table 3. Alternative 1 – Expand the Filter Complex Facility Needs and Maintain 55 mgd ADWF Rated Capacity

Equipment	Unit	Alt 1 A – Without Plant Drain Treatment [a]	Alt 1 B – With Plant Drain Treatment [a]
Construction			
Wetlands Rehabilitation	unitless	Yes	Yes
Additional Pumping Requirements at DAF/Filters	mgd	19	19
Additional DAF/Filter Feed Pumps – Power	hp	150	150
Filter Feed Split Box	unitless	Yes	Yes
Additional Filters - Number (Duty + Standby)	Number	7	7
Alkalinity – Daily Demand	gal/d	9,900	4,600
Backwash Flow (instantaneous)	mgd	14.7	14.7
Filtration - Backwash Pumps (Power)	hp	110	110
Filters/DAF - Backwash (Storage Volume)	MG	0.4	0.4
Filtration - Methanol Vol. (Liquid)	gal/d	7,700	6,100
Filtration - Methanol Vol. (Liquid)	gal	110,000	86,000
Plant Drain Reactor (refer to Section 6.1)	unitless	No	Yes
Operation			
Additional Filter Feed Pumps	hp	90	90
Additional Filter Backwash Pumps	hp	110	110
Filtration - Methanol Feed	hp	<1	<1
Plant Drain Treatment	hp	0	225
Ferric - Annual Demand	lb/d	2,400	1,200
Alkalinity - Annual Demand	gal/d	8,600	4,000
MeOH - Annual Demand	gal/d	7,100	5,600
Footprint			
Alkalinity - Storage Footprint	sf	1,400	1,000
Additional Filters – Area	sf	19,000	19,000
Filtration - Methanol Footprint	sf	2,500	2,200
Plant Drain Reactor Footprint	sf	0	10,000

a. Sized for average maximum month conditions for the 55 mgd ADWF design conditions

The analysis assumes methanol as an external carbon source as it is the industry standard. However, there are other options for external carbon sources, including:[3]

- Pure chemicals (e.g., methanol, ethanol, acetate, sugar, and butanol)
- Commercially available (e.g., Unicarb, Micro C™, etc)
- Raw industrial/agricultural byproducts (e.g., corn syrup, molasses, brewery waste, etc.)
- Sludge fermentation products
- Electron donors (e.g., hydrogen gas, methane, etc.)

The selection of an external carbon source is governed by a combination of cost, safety, dose control, and tertiary denitrification process type.[3] A pure chemical is recommended for the City because they are the most proven and reliable. Unfortunately, the most common chemical form, methanol, poses a safety risk due to its flammability. Despite the safety issues associated with methanol, it was used in this evaluation as it is a proven and reliable commodity on the scale required by the City. A picture of a methanol feed facility is shown in Figure 11.

Figure 11. Methanol Feed Facility at the York River WWTP (Hampton Roads Sanitation District)

6.3 Alternative 2 – Reroute Secondary Effluent to Nitrifying Biotowers Then Discharge to Wetlands

This alternative involves altering the current flow routing and expanding the filter complex as shown Figure 12. In a similar fashion to Alternative 1, the secondary clarifier effluent would be

[3] Gu, A.Z., et al. (2010) Protocol to evaluate alternative external carbon sources for denitrification at full-scale wastewater treatment plants, WERF research project NUTR1R06b.

conveyed through the oxidation ponds and to the wetlands flow split box. At the split box, the water would be routed directly to the NBTs. The NBT effluent would then be returned to the wetlands flow split box and fed into the wetlands (oxidation ponds → NBTs → wetlands).

This concept of sending the NBT effluent to the wetlands was introduced in the CIEMP in 2011.[1] The benefit of such a configuration is that the wetlands can remove a portion of the nitrate contained in the NBT effluent through biological denitrification. While using the wetlands for a natural systems biological denitrification may seem economically attractive, denitrification is sensitive to temperature and wetlands performance is difficult to estimate. Meeting the nitrate discharge limit by wetlands treatment alone is probable during the warmer dry summer months but not achievable during the colder winter months. For these reasons, it is recommended that the filters be rehabilitated and expanded to operate as denitrification filters in this Alternative to remove nitrate. The analysis presented herein is based on little or no nitrate removal in the colder winter months and upwards of 50 percent nitrate removal in the warm summer months[1].

Following the wetlands, the water is fed into the DAFs, followed by the filter complex. Similar to Alternative 1, the DAFs are required to remove any remaining algal load derived from the wetlands. The DAF chemical demand would be less than the current demand (about $1.8 million/year) as the algal load will be reduced by the rehabilitated wetlands upstream of the DAF. The extent of DAF chemical reduction is unknown and would require further testing. For this conceptual level evaluation, it was assumed that the DAF chemical dose would be reduced by 50 percent. However, the extent of DAF chemical reduction is unknown and would require further testing.

Similar to Alternative 1, the filter complex would need to be expanded for denitrification and an external carbon source would be required. The filter complex footprint and external carbon source would be similar to Alternative 1 because little or no removal in the size governing wet weather months. However, the external carbon source demand would be reduced during the warm summer months as a portion of nitrate is removed in the wetlands. The reduction in external carbon would be directly related to the extent of nitrate removal in the wetlands.

Like Alternative 1, it is recommended that the existing pipeline from the advanced tertiary treatment plant be used to return the DAF and filter backwash to the plant drain.

The facility needs associated with Alternative 2 (with and without Plant Drain Treatment) are provided in Table 2. The key upgrades include modification of the wetlands flow split structure to accommodate flow routing of NBTs to the wetlands, additional pumps at the DAF/Filter pump station to maintain the 55 mgd ADWF rated capacity, expansion of the filters to function as denitrifying filters, replacement of the filter media from dual- to mono-media at the filters, external carbon source facilities, plant drain treatment (for Option B), a DAF/filter backwash flow equalization tank, and rehabilitation of the appropriate facilities according to the CIEMP 2011.

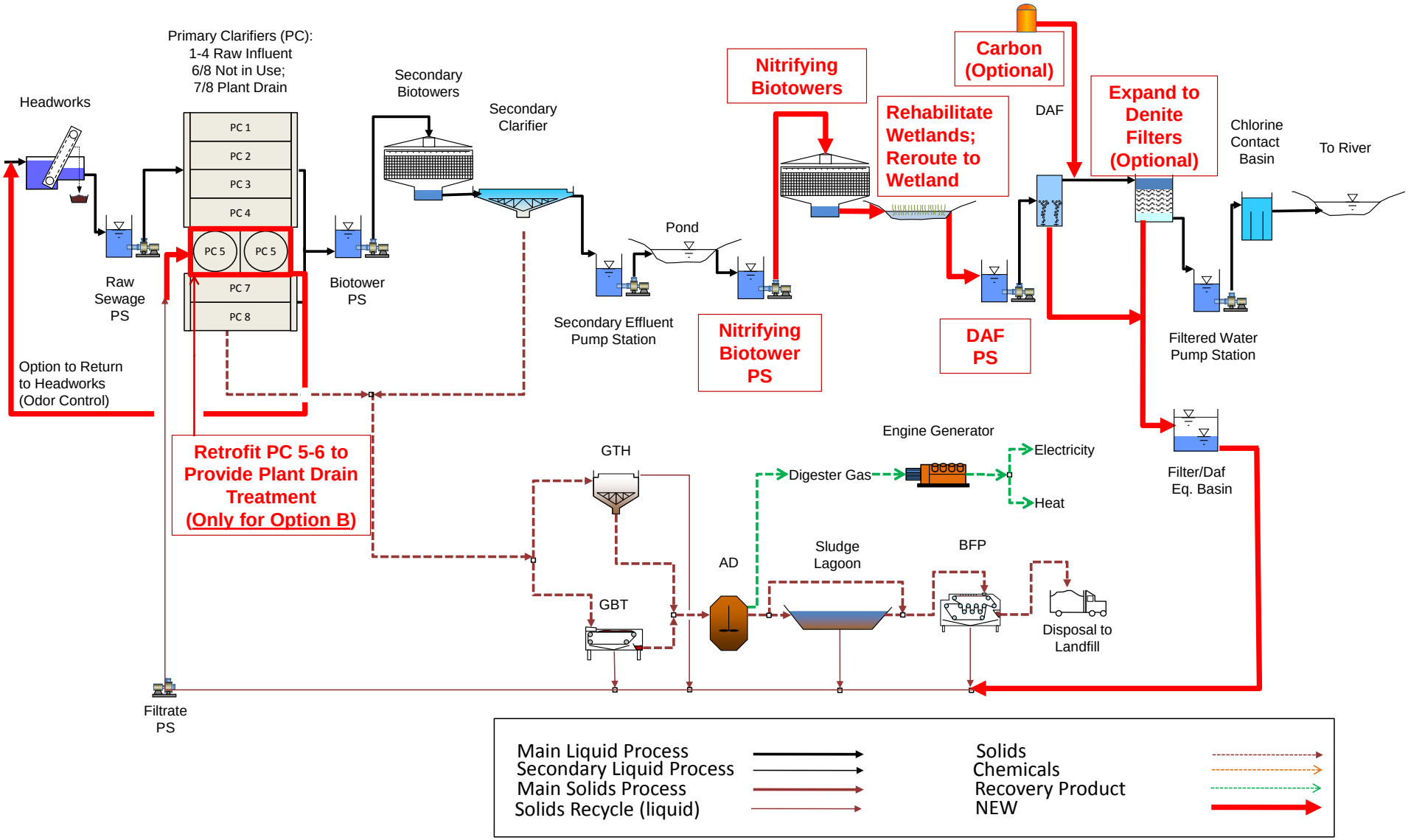

Figure 12. Alternative 2 Process Flow Diagram - Reroute Secondary Effluent to Nitrifying Biotowers Then Discharge to Wetlands

Table 4. Alternative 2 – Expand the Filter Complex Facility Needs and Maintain 55 mgd ADWF Rated Capacity

Equipment	Unit	Alt 2 A – Without Plant Drain Treatment [a]	Alt 2 B – With Plant Drain Treatment [a]
Construction			
Wetlands Rehabilitation	unitless	Yes	Yes
Flow Split Structure Modification at the Wetlands and Pipe from the NBTs to the Split Structure	unitless	Yes	Yes
Add Third NBT	unitless	Yes	Yes
Additional Pumping Requirements at DAF/Filters	mgd	19	19
Additional DAF/Filter Feed Pumps - Power	hp	150	150
Filter Feed Split Box	unitless	Yes	Yes
Additional Filters - Number (Duty + Standby)	Number	7	7
Alkalinity – Daily Demand	gal/d	9,900	4,600
Additional Filters - Backwash Flow (instantaneous)	mgd	14.7	14.7
Additional Filters - Backwash Pumps (Power)	hp	110	110
DAF/Filter Backwash (Storage Volume)	MG	0.4	0.4
Filtration - Methanol Vol. (Liquid)	gal/d	7,700	6,100
Filtration - Methanol Vol. (Liquid)	gal	110,000	86,000
Plant Drain Reactor (refer to Section 6.1)	unitless	No	Yes
Operation			
Additional Filter Feed Pumps	hp	90	90
Additional Filter Backwash Pumps	hp	110	110
Filtration - Methanol Feed Energy	hp	<1	<1
Plant Drain Treatment	hp	0	225
Ferric - Annual Demand	lb/d	2,400	1,200
Alkalinity - Annual Demand	gal/d	8,600	4,000
MeOH - Annual Demand	gal/d	5,300	4,200
Footprint			
Alkalinity - Storage Footprint	sf	1,400	1,000
Additional Filters – Area	sf	19,000	19,000
Filtration - Methanol Footprint	sf	2,500	2,200
Plant Drain Reactor Footprint	sf	0	10,000

a. Sized for average maximum month conditions for the 55 mgd ADWF design conditions

Refer to Section 6.1 for a description on plant drain treatment and the corresponding phasing.

The advantages and disadvantages associated with rerouting secondary effluent to the NBTs and then discharging to the wetlands are as follows:

- Advantages:
  - Reliably meets the discharge N limits.
  - Filters are a proven technology to remove nitrate.
  - Provide a final control point to meet nitrate target.
  - Process can be operated to achieve very low nitrate limits (below 1 mg N/L) if required. However, it requires additional carbon feed which is costly and creates safety concerns for operations.
  - Potential to remove both nitrogen and phosphorus simultaneously in the filters.
  - Minimal changes to the existing plant

- Disadvantages:
  - Uncertainty on nitrate removal in wetlands; the filter complex must be designed to account for this uncertainty.
  - Need to still use the DAF which requires a large and expensive chemical demand.
  - Produces more solids to be handled than if there was just nitrogen removal in the upstream processes.
  - Safety burden with the external carbon source (if methanol used).
  - Loading rate is reduced when operating as a denitrifying filter versus a conventional filter. This translates to more filter area and costs.
  - Operational costs for feed pumping the filters and external carbon.
  - Complex controls at the filters.

6.4 Alternative 3 – Recycle Nitrifying Biotower Effluent to the Headworks

This alternative involves recycling NBT effluent to the headworks. The conceptual benefit of this alternative is that no external carbon source is required, capacity will be gained on the secondary biotowers, and the nitrified NBT effluent can assist with odor control at the headworks. A process flow diagram for this alternative is provided in Figure 13.

Similar to Alternative 1, the secondary clarifier effluent would be conveyed through the ponds and rehabilitated wetlands to the NBTs. The NBT effluent is returned to the headworks. The range in return flow is 100-200 percent of raw influent. Despite the aforementioned benefits of this alternative, the main plant does not have the hydraulic or pumping capacity to convey this much additional water through the plant. As a result, this alternative has been deemed fatally flawed and not considered any further.

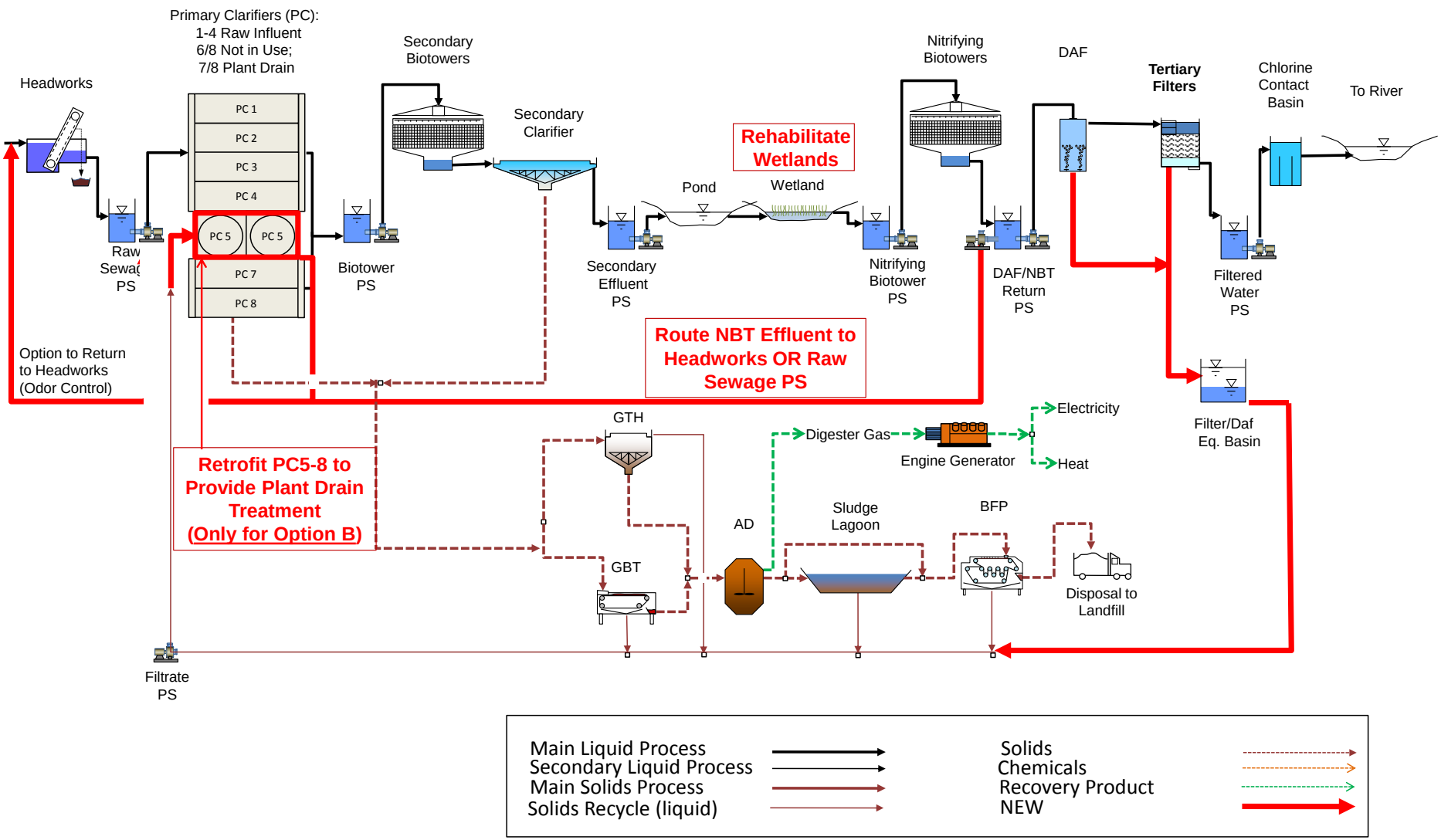

Figure 13. Alternative 3 Process Flow Diagram - Recycle Nitrifying Biotower Effluent to the Headworks

6.5 Alternative 4 – High Rate A/B Stage Process

The High Rate A/B stage process is a two-stage biological concept. This alternative was considered as it leverages existing tankage for the first stage in the primary clarifiers and it is energy efficient. In fact, the Strass Plant in Strass, Austria became the first energy neutral treatment plant years ago without importing organics with the key process being the High Rate A/B Stage Process. A process flow diagram for this alternative is provided in Figure 14.

The first stage, known as the A-stage, is a high rate activated sludge process that relies on settling of total suspended solids (TSS) and adsorption/settling of biochemical oxidation demand (BOD). The second stage, known as the B-stage, is also a high rate activated sludge system that removes nitrogen and any remaining TSS and BOD.

The A-stage process would occur in the existing primary clarifiers (with modifications). The A-stage process requires an aeration zone, followed by clarification. Primary clarifiers 5 and 6 (i.e., Squirculars) or 7 and 8 are large enough to accommodate the aeration zone volume requirements (about a 30-min hydraulic residence time). Regardless of which group of primary clarifiers is used for the A-stage aeration zone, the clarifier would be retrofitted with diffusers to aerate. All the raw influent would be fed into the appropriate clarifier for aeration. The A-stage aeration effluent would be conveyed to the secondary biotower pumping station where it is pumped back into the primary clarifiers 1through 4, which serve as the A-stage clarifiers. The effluent from primary clarifiers 1 through 4 (i.e., A-stage process effluent) is re-piped and sent to the B-Stage aeration tanks (new).

We anticipate that the existing primary clarifiers have sufficient capacity for the High Rate A/B State Process. Thus, no additional primary clarifiers were assumed for this analysis. The high rate A-stage solids have different settling properties than conventional primary clarifiers. This issue would be validated via pilot testing if the High Rate A/B Stage Process is carried forward.

The conceptual benefit of operating the primaries as an A-stage is that it enhances BOD removal compared to the existing primaries. Conventional primaries remove about 30 percent of the raw influent BOD, whereas the A-stage removes about 60 percent of the BOD. The increase in BOD removal is possible by increased sorption of BOD on the flocs coupled with entrapped particulate BOD in the flocs. The TSS removal for the A-stage and conventional primaries is comparable at about 60 percent. The benefit of removing more BOD is that the downstream B-stage is smaller than other activated sludge configurations, there is more BOD diverted to the digesters to increase biogas production, and the B-stage solids production is reduced.

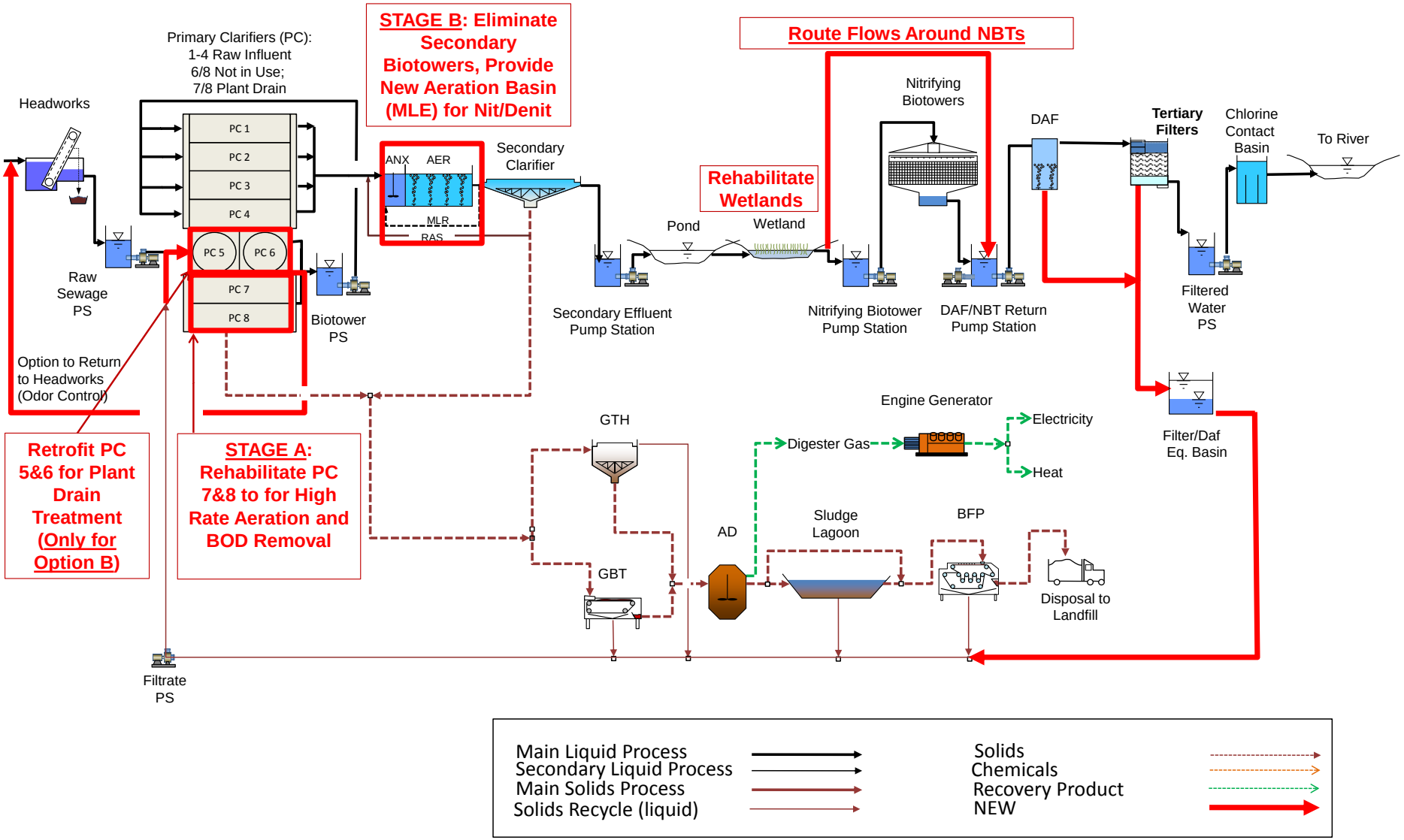

Figure 14. Alternative 4 Process Flow Diagram – High Rate A/B Stage Process

The B-Stage aeration basins operate as an activated sludge that performs nitrogen removal by a mixed liquor return (MLR) line from the aeration zone effluent recycled to the anoxic zone at the front of the basins. By having the B-stage configured for nitrogen removal, the RWCF nitrogen discharge limits will be met leaving the secondary clarifiers.

Rehabilitation of the existing secondary clarifiers and construction of additional clarifiers are required for the B-Stage process. The additional clarifiers are required for the solids loading associated B-Stage activated sludge process. A fifth secondary clarifier is required to meet current flows and loads for the B-Stage process. A sixth and seventh secondary clarifier is required to meet future flows and loads for the B-Stage process.

A more detailed discussion on the High Rate A/B Stage Process is provided in Appendix B.

The secondary clarifier effluent would be conveyed through the ponds and rehabilitated wetlands. The ponds are used to remove metals and equalize the peak flows, whereas the wetlands are used to remove algae and polishing. The wetlands effluent would route past the NBTs as the ammonia has been removed in the B-Stage and fed directly to the DAFs. The DAFs would remove any algal load not removed in the wetlands. Similar to Alternatives 1 and 2, the DAF chemical demand would be less than the current demand (about $1.8 million/year) as the algal load will be reduced by the rehabilitated wetlands upstream of the DAF. The extent of DAF chemical reduction is unknown and would require further testing. For this conceptual level evaluation, it was assumed that the DAF chemical dose would be reduced by 50 percent. However, the extent of DAF chemical reduction is unknown and would require further testing.

The DAF effluent would be fed to the filter complex which would require rehabilitation. Similar to Alternatives 1 and 2, the DAF/Filter backwash would be connected to the plant drain using an existing pipeline rather than the current approach of returning to the oxidations ponds. In order to utilize this existing pipeline, it is recommended that the filter backwash streams be equalized and returned in this existing pipeline.

The facility needs associated with Alternative 4 (with and without Plant Drain Treatment) are provided in Table 5. The key changes are modifications to the existing primary clarifiers to operate as the A-stage (diffusers, blowers, air piping, blower building, piping, etc.), construction of the B-stage aeration zones, modifications to bypass the NBTs and route wetlands effluent to the DAF/Filter pumping station, and rehabilitate the appropriate facilities according to the CIEMP 2011.

Refer to Section 6.1 for a description of plant drain treatment and the corresponding phasing.

Table 5. Alternative 4 – High Rate A/B Stage Process and Maintain 55 mgd ADWF Rated Capacity

Equipment	Unit	Alt 4 A – Without Plant Drain Treatment [a]	Alt 4 B – With Plant Drain Treatment [a]
Construction			
Wetlands Rehabilitation	unitless	Yes	Yes
Additional Pumping Requirements at DAF/Filters	mgd	19	19
Additional DAF/Filter Feed Pumps – Power	hp	150	150
Filter Feed Split Box	unitless	No	No
DAF/Filter Backwash (Storage Volume)	MG	0.6	0.6
A-Stage Blower Power	hp	400	400
A-Stage RAS	mgd	34	34
A-Stage WAS Flow	mgd	2.1	2.1
B-Stage Blower Power	hp	3,100	2,900
B-Stage RAS Design	mgd	40	40
B-Stage WAS Flow	mgd	2.6	2.6
Operation			
Additional Filter Feed Pumps	hp	90	90
Additional Filters - Backwash Pumps (Energy)	hp	150	150
A-Stage Blower Energy	hp	400	400
A-Stage RAS Energy	hp	110	110
A-Stage WAS Energy	hp	15	15
B-Stage Blower Energy	hp	2,400	2,100
B-Stage RAS Energy	hp	270	270
B-Stage WAS Energy	hp	17	17
Plant Drain Treatment	hp	--	225
Ferric - Annual Demand	lb/d	2,400	1,200
Alkalinity - Annual Demand	gal/d	2,300	2,300
Footprint			
Alkalinity - Storage Footprint	sf	700	700
Plant Drain Reactor Footprint	sf	--	10,000
B-Stage Footprint	sf	100,000	80,000

Note: [a] Sized for average maximum month conditions for the 55 mgd ADWF design conditions

The advantages and disadvantages associated with Alternative 4 are as follows:

- Advantages:
  - Maximizes BOD diversion to the digesters (increases biogas production).
  - Leverages existing tankage for the A-Stage.
  - Relatively small footprint for the B-Stage (compared to other activated sludge configurations).
  - Biological process is less sensitive to cold weather ambient temperatures than Alternatives 1 and 2.
  - Energy and chemically efficient process which in turn reduces chemical deliveries and energy demands.
  - Reduces DAF chemical requirements as flow is routed through the wetlands and algal loads are anticipated to be reduced.
  - Reduces pumping requirements (i.e., energy) and equipment wear by routing flow around the NBTs.

- Reliably meets the discharge N limits (would require an external carbon source at the B-Stage if the nitrate limits are decreased).
- Potential to also remove phosphorus in the filters.

- Disadvantages:
  - Emerging configuration (proven in Europe; currently pilot tested at Hampton Roads Sanitation District).
  - Requires construction of the B-Stage aeration basins.
  - Complex controls at the B-Stage aeration basins.

The High Rate A/B Stage Process is the least established alternative considered. As a result, piloting is recommended if this alternative is carried forward. Although it is emerging, it has been in operation in Strass, Austria for decades and facilities in the United States are considering this for its inherent energy advantages. One such utility, Hampton Roads Sanitation District (HRSD), is currently pilot testing the High Rate A/B Stage Process at their Chesapeake Elizabeth facility. Mike Falk visited the HRSD pilot in 2012 to better understand the technology. A picture of HRSD's A-stage pilot unit is shown in Figure 15.

Figure 15. Hampton Roads Sanitation District A-Stage Pilot (Reactor on Left; Clarifier on Right)

Despite its emerging status, the concepts are not new to wastewater treatment. The key obstacle in successful implementation of the High Rate A/B Stage Process is getting the controls right for both stages. Over the next several years HDR anticipates the design and construction of several High Rate A/B Stage Process installations nationwide.

7.0 Non-Economic Comparison

A list of non-economic criteria was developed for comparative reasons as follows:

- Nitrate removal range
- Waste by-products from the technology
- Design footprint
- Impacts on plant capacity
- Reliability
- Scalability
- Proprietary nature of the technology
- Flexibility in meeting future discharge permit limits
- Pilot considerations

A matrix that compares the non-economic criteria is provided in Table 6.

8.0 Economic Comparison

The construction costs are based on the physical location of the new structures and processes and the interconnecting facilities.

8.1 Cost Estimate Disclaimer

The cost estimates are opinions of probable construction costs. They are based on HDR's professional experience and not an official bid document. The estimates are considered planning level values. A more detailed analysis would be needed to refine these costs.

8.2 Approach

This estimate is consistent with the American Association of Cost Engineers, Recommended Practice No. 17R-97, Class 4 and the American National Standards Institute definition of a "budget estimate". The estimates should be accurate within a range of +40 percent to -20 percent. The life-cycle costs were prepared using the Net Present Value (NPV) method.

Table 6. Technology Non-Economic Comparison Matrix

Parameter	Plant Drain Treatment	Alternative 1 – Add Denitrifying Filters	Alternative 2 – Reconfigure Wetlands and Add Denitrifying Filters	Alternative 4 – High Rate A/B Stage Process
Nitrate Removal Range	Only removes ammonia in the plant drain streams; flexibility to remove total nitrogen in the plant drain streams	Highly flexible in ability to meet low level nitrate limits at the filter complex. Requires larger external carbon source though for lower limits.	Highly flexible in ability to meet low level nitrate limits at the filter complex. Requires larger external carbon source though for lower limits.	Moderately flexible; Limited by Internal Mixed Liquor Return in B-Stage and External Carbon Source
Waste By-Products	Negligible as the nitrifier biomass yield is low	Additional solids in filter backwash	Additional solids in filter backwash	Reduced solids as more BOD removed in the primaries and remaining BOD consumed by denitrifiers
Design Footprint	Fit within existing tankage	Expand filter complex	Expand filter complex	Requires space for the B-stage aeration basins
Impacts on Plant Capacity	Gain capacity	None	None	None
Reliability	Excellent	Excellent	Wetland nitrate removal is highly variable; denitrifying filters are excellent	Unknown as it would require a more detailed evaluation; the concepts are established but the reactor configuration is relatively novel for the US.
Technology Status: Established OR Emerging	Established	Established	Established	Emerging in the US; operating for decades in Europe
Scalability	Scalable	Scalable	Scalable	Scalable
Proprietary	No	No	No	No
Adaptability (ability to modify for future permits)	No, limited to the plant drain streams	Can meet lower total nitrogen and phosphorus limits	Can meet lower total nitrogen and phosphorus limits	Limited for total nitrogen unless an external carbon source added to the B-Stage; Could remove phosphorus in the filters
Pilot Considerations	Not required; simple bench-scale test should be adequate	Not required but could be used to develop more aggressive design criteria	Wetlands nitrate removal testing recommended; denitrifying filter pilot testing not required but could be used to develop more aggressive design criteria	Yes as the results can be used to confidently size the B-Stage tankage

The O&M cost estimates were calculated using the HDR Water Cost Model. The HDR Water Cost Model was created using the HDR authored Environmental Protection Agency (EPA) document "Estimating Water Treatment Costs: Volume 2-Cost Curves Applicable to 1 to 200 mgd Treatment Plants" dated August 1979, to derive approximate labor, energy, chemical, and maintenance expenditures according to specific treatment technologies.

The flow and load values for the 55 mgd ADWF design flow were used to size the treatment components for the evaluated treatment technologies. The operational costs (energy and chemicals) were based on current flows and loads and increased incrementally to account for future flow increases.

8.3 Unit Cost Values

The life-cycle cost evaluation was based on the values shown in Table 7. The City provided all the values except for the Engineering-News Record (ENR) Construction Cost Index (CCI) and methanol costs. The methanol costs are based on HDR experience from other projects. To perform the cost evaluations, each selected technology was physically located at RWCF based on the location of the existing piping, channels, and other necessary facilities.

Table 7. Economic Evaluation Variables

Item	Unit	Value
Nominal Discount Rate	%	6.5
Inflation Rate:		
General	%	3.5
Energy	%	3.5
Chemicals	%	3.5
Base Year		2014
Project Life	Years	20
Energy	$/kWh	0.10
Chemicals:		
Ferric	$/ton	579
Polyalum Blend	$/ton	852
Methanol	$/gal	2.75

8.4 Net Present Value of Total Project and Operations and Maintenance Costs

An estimate of the net present value for capital, operations and maintenance, and total NPV for the alternatives are shown below in Table 8. The capital costs are based on maintaining the 55 mgd ADWF rated capacity. The chemical and energy demands are based on current flows and loads and increased incrementally to account for future flow increases.

Table 8. Total Project Capital, Operations and Maintenance, and Total Net Present Value Costs

Alt	Option	Capital Net Present Value ($ Million)	O&M Net Present Value ($ Million)	Total Net Present Value ($ Million)
1A	Expand Filters and Add an Ext C Source	140	112	252
1B	Expand Filters and Add an Ext C Source (w/Plant Drain Treatment)	151	86	237
2A	Re-Route NBT and Wetlands, Expand Filters and Add an Ext C Source	166	92	258
2B	Re-Route NBT and Wetlands, Expand Filters and Add an Ext C Source (w/Plant Drain Treatment)	153	70	223
4A	High Rate A/B Stage Process	153	43	196
4B	High Rate A/B Stage Process (w/Plant Drain Treatment)	155	40	195

There are several key trends to highlight for capital, operations and maintenance, and total net present value:

- Capital:
  - The costs range from $140 to 166 million.
  - Alternatives 1A and 1B are least expensive Alternatives.
  - Alternatives 2A and 2B are the most expensive Alternatives.
- Operations and Maintenance (presented as net present value):
  - The costs become less expensive with each alternative counterpart (Alternative 4A<2A<1A and 4B<2B<1B).
  - The savings between Alternatives 1 and 2 counterparts is attributed to a reduced chemical demand, specifically alkalinity and methanol (during the warm summer months).
  - The most expensive chemical for Alternatives 1 and 2 is methanol. Not only is it expensive, it also creates safety concerns for operations.
  - Alternative 4 is significantly less expensive than Alternatives 1 and 2 due to its lower chemical demand, specifically alkalinity and methanol. A portion of the alkalinity lost by nitrification is recovered with denitrification in the B-Stage.
  - The plant drain treatment offers a savings over time. The impact on net savings per Alternative varies due to plant wide operational impacts.
- Total Net Present Value:
  - The costs become less expensive with each alternative counterpart (Alternative 4A<2A<1A and 4B<2B<1B).

- Alternative 1 is the most expensive due to the amount of filters and methanol demands.
- Alternative 4 has the lowest value due to a lower chemical demand than Alternatives 1 and 2.
- The impact of plant drain treatment on NPV provides a savings for all the Alternatives. The savings for plant drain treatment in Alternatives 1 and 2 are related to energy demand per lb ammonia removed, alkalinity savings, methanol savings, and others. In contrast, the cost for with and without plant treatment in Alternative 4 are comparable (Alterative 4A ≈ 4B). The plant wide benefits of plant drain treatment not captured in this evaluation are improved primary clarifier settleability, reduced odors throughout the main plant, potential algal growth reduction in the ponds, and others. This improvement is not captured in this evaluation as the extent of improvement is site specific and unclear at this stage. As a result, plant drain treatment is recommended for all the alternatives evaluated.

Details on the capital cost and net present value are provided in Appendix C.

9.0 Summary and Conclusions

This report presented the evaluation of several alternatives to meet discharge nitrate limits at the City of Stockton's RWCF. The four alternatives considered include:

- Alternative 1- Expand the existing filters to perform nitrogen removal.
- Alternative 2 - Reroute the main plant flow so that wetlands are placed downstream of the nitrifying biotowers (NBTs). This alternative might require additional nitrogen removal polishing downstream in the filters.
- Alternative 3 - Recycle NBT effluent to the headworks.
- Alternative 4 – High Rate A/B Stage Activated Sludge Process.

For each alternative, the option of implementing plant drain treatment was also considered.

The facility needs and the corresponding costs were prepared for each alternative. Alternatives 1 and 2 considered nitrate removal in the advanced tertiary treatment plant, with the majority of nitrate removal at the filters. In contrast, Alternative 4 considered nitrate removal at the main plant. The capital costs for all alternatives ranged from $140 to $166 million (Alternatives 1<4<2).

The operations and maintenance costs reveal that energy and chemical requirements make Alternatives 1 and 2 more expensive than Alternative 4. Additionally, the primary chemical demand in Alternatives 1 and 2 is from methanol, which is costly and creates safety concerns for operations.

The reduced energy and chemical demands in Alternative 4 provides several benefits not captured in the economic analysis as follows:

- Fewer chemical deliveries than Alternatives 1 and 2 as there is less demand.
- More reliable at meeting ammonia discharge limits than Alternatives 1 and 2 as the biological process is less sensitive to cold weather ambient temperatures.
- Increases organic diversion to digesters to increase biogas production. This additional biogas creates power that offsets electrical energy demands.
- Reduction in net biosolids production at the plant as more organics are diverted to the digesters.

Despite having the lowest total net present value, Alternative 4 is the least established alternative considered. As a result, a pilot study is recommended if this alternative is carried forward. Despite its emerging status, the unit processes that comprise the High Rate A/B Stage Process are not new. The key obstacle in successful implementation of the High Rate A/B Stage Process is getting the controls right for both stages. Over the next several years HDR anticipates the design and construction of several High Rate A/B Stage Process installations nationwide.

If either Alternatives 1 or 2 are selected, it appears that plant drain treatment is a beneficial addition to lower operations and maintenance costs over time. In contrast, Alternative 4 lowers operations and maintenance costs over time but not as significantly as Alternatives 1 and 2. The net present value for with and without plant drain treatment in Alternative 4 is comparable (Alternative 4A ≈ 4B). The plant wide benefits of plant drain treatment not captured in this evaluation are as follows:

- Improved primary clarifier settleability
- Reduced odors throughout the main plant
- Potential algal growth reduction in the ponds

This improvement is not captured in this evaluation as the extent of improvement is site specific and unclear at this stage. As a result, plant drain treatment is recommended for all the alternatives evaluated.

Moving forward, the City should consider both the economic results plus the non-economic evaluation presented in this TM. There are advantages and disadvantages for each alternative that should be considered.

Appendix A – Emerging Plant Drain Treatment (DEMON®)

If the City decides to further pursue plant drain treatment, it is recommended that some of the emerging technologies be considered as they will be more established moving forward, in particular the deammonification (DEMON®) technology. The elevated temperatures (about 30 degrees C) and relatively high strength (500-1,000 mg N/L) for the plant drain stream lends itself to DEMON®. DEMON® relies anaerobic ammonia oxidation (anammox) bacteria to remove nitrogen. Anammox is a two-step process that initially requires partial nitritation where the ammonia is oxidized to nitrite (see Figure 5):

$$NH_4^+ + 1.5O_2 \rightarrow NO_2^- + H_2O + 2H^+ \quad (3)$$

The partial nitritation step typically stops at equal parts ammonia-N:nitrite-N. The subsequent second step simultaneously removes the ammonia and nitrite to form nitrogen gas as shown in Figure 5.

$$NH_4^+ + NO_2^- \rightarrow N_{2(g)} + 2H_2O \quad (4)$$

The anammox bacteria form granules as shown in Figure A - 1. The large (>100 mm) granules settle more readily than conventional activated sludge flocs and as a result can be selected by reducing settling times.

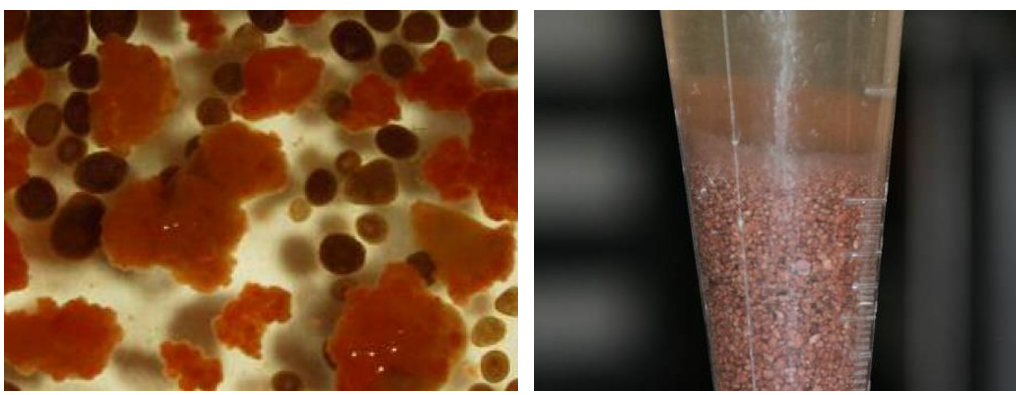

Figure A - 1. ANAMMOX® Granules (Photos Provided by Paque Engineering) (Left) and ANAMMOX® Granules from Olburgen, NL, WWTP (Right).

The primary benefits of the anammox processes compared to conventional activated sludge for nitrogen removal is reduced power consumption (up to 60% less per pound N removed), little or no required external carbon source for nitrogen removal, low yield (<0.15 lb TSS/lb N), and reduced CO_2 emissions.

Appendix B – High Rate A/B Stage Activated Sludge Process

Strass WWTP Description and Applicability to RWCF

The Strass im Zillertal Wastewater plant near Innsbruck Austria is on one of the few plants in the world to achieve energy self sufficiency without importing organics. The plant serves a population of approximately 60,000 in the summer and as high as 250,000 during the winter tourist season. Peak winter flow and load is equivalent to a plant treatment capacity of 10 mgd. The plant provides secondary treatment plus nitrification and denitrification. A plant flow sheet is provided in Figure B - 1.

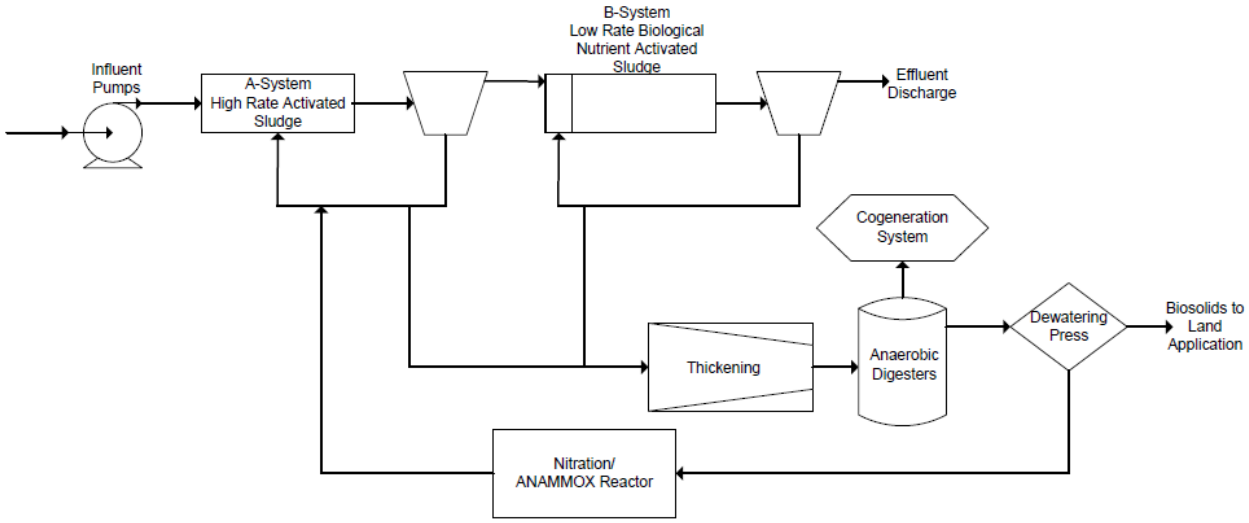

Figure B - 1. Process Flow Diagram (Borrowed from Crawford et al., 2010)

The following techniques have been applied at the plant over the last decade to enable the plant to improve energy sustainability and allow the plant to become energy neutral:

- Conversion from conventional fine bubble aeration to high efficiency strip aeration
- Installation of a highly efficient engine generator with a gross efficiency of approximately 38 percent
- Conversion to a dual aeration system(commonly called an A-B Stage concept)
- Addition of sidestream treatment using the DEMON process
- On line ammonia measurement to control air requirements in the B Stage

Rather than using primary clarifiers, the plant uses a unique two stage aeration scheme consisting of short term A stage aeration followed by a conventional B stage aeration. The A stage is followed by an intermediate clarifier prior to entering the B stage. The A stage has a hydraulic detention time of 0.5 hours and a sludge age of 0.5 days. The high-rate nature of the A stage process promotes BOD capture in the floc. There is not sufficient time for substrate metabolism. As a result, the substrate is simply taken up by floc and conveyed to solids processing without metabolism. The captured BOD is recovered as biogas in the anaerobic digesters. The A stage removes approximately 55-65 percent of the organic load compared to approximately 35 percent for a conventional primary clarifier. The target sludge retention time in the B stage is 10 days. Because so much of the organic load is diverted from the liquid stream in the A stage and then

digested, the plant biogas cogeneration system output increased by nearly 100 percent over 10 years. A schematic on the COD flow balance is shown in Figure B - 2.

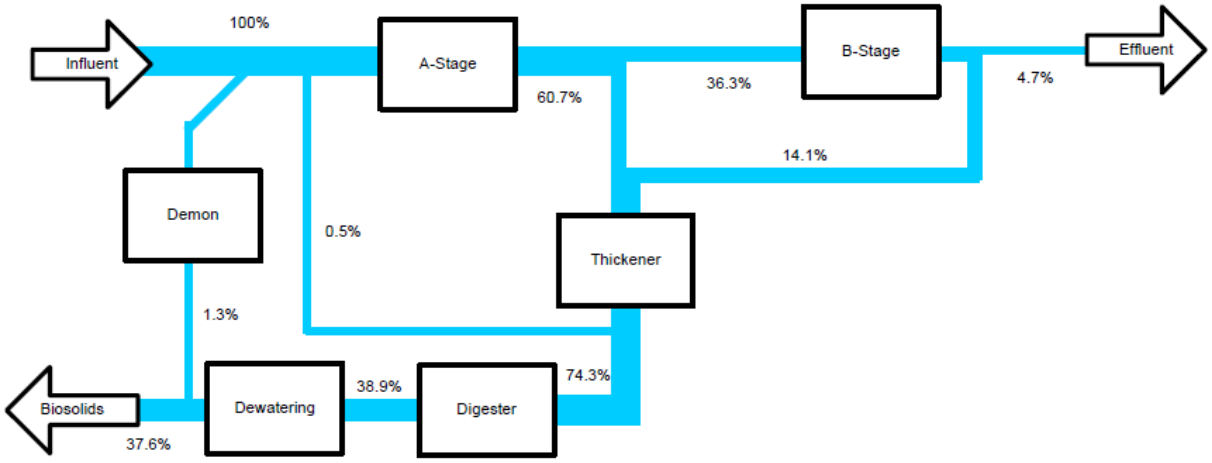

Figure 3-3. Simulated COD-Balance of the Strass WWTP Based on a Two-Week Measurement Campaign in Summer 2004.
Reprinted with permission from IWA, 2007.

Figure B - 2. COD Balance Simulation at Strass (Borrowed from Crawford et al., 2010)

Potential benefits of the A-B stage aeration concept:

- Significant increase in biogas and power production, perhaps by as much as 20-25 percent
- Reduction of odors associated with primary clarifiers (for the time the A-B stage aeration is utilized)
- Relative low energy requirements with respect to other activated sludge configurations doing nitrogen removal
- Can leverage existing secondary clarifiers
- Lower overall biosolids production (savings in polymer, hauling, and tipping fees)
- Further confirmation of the District being a sustainability/energy leader

Appendix C – Cost Estimate

CAPITAL COSTS

Item		Alt 1A cost	Alt 1B cost	Alt 2A cost	Alt 2B cost	Alt 4A cost	Alt 4B cost
Equipment							
Primary Clarifiers 9 and 10 A						$ 2,990,000	$ 2,990,000
Wetlands Rehabilitation and Reconfiguration Thr		$ 2,750,000	$ 2,750,000	$ -	$ -	$ -	$ -
Wetlands Rehabilitation and Reconfiguration A		$ -	$ -	$ 3,670,000	$ 3,670,000	$ 3,670,000	$ 3,670,000
NBT to Wetlands Pipe						$ 2,940,000	$ 2,940,000
Alkalinity Storage and Feed		$ 570,000	$ 570,000	$ 570,000	$ 570,000		
DAF/Filter PS Expansion (additional pumping)		$ 1,630,000	$ 1,630,000	$ 1,630,000	$ 1,630,000	$ 1,630,000	$ 1,630,000
Filter Feed split box		$ 220,000	$ 220,000	$ 220,000	$ 220,000		
Additional Filters (19,000 sf)		$ 16,310,000	$ 16,310,000				
Additional Filters (13,000 sf)				$ 16,310,000	$ 16,310,000		
MeOH Storage and Feed		$ 960,000	$ 960,000	$ 960,000	$ 960,000		
Filter Backwash Equalization Tank		$ 190,000	$ 190,000	$ 190,000	$ 190,000	$ 190,000	$ 190,000
Sub-Total		$ 22,630,000	$ 22,630,000	$ 23,550,000	$ 23,550,000	$ 8,430,000	$ 8,430,000
High Rate A/B Stage Process							
Piping (Biotower PS to PC1-4)						$ 2,940,000	$ 2,940,000
Flow split for PC 5-8 effluent						$ 280,000	$ 280,000
Flow split for PC 1-4 effluent						$ 280,000	$ 280,000
Aeration basin (MLE) 15 MG						$ 21,390,000	$ 18,190,000
Aeration equipment for MLE						$ 3,110,000	$ 2,940,000
RAS/WAS Pump Station						$ 2,220,000	$ 2,220,000
Mixers						$ 360,000	$ 360,000
Bypass NBTs						$ 150,000	$ 150,000
Secondary Clarifiers						$ 6,140,000	$ 6,140,000
Sub-Total		$ -	$ -	$ -	$ -	$ 36,870,000	$ 33,500,000
Plant Drain Treatment							
Aeration equipment in 5-6 PC		$ -	$ 1,050,000	$ -	$ 1,050,000	$ -	$ 1,050,000
Plant Drain Treatment		$ -	$ 2,870,000	$ -	$ 2,870,000	$ -	$ 2,870,000
Plant Drain Treatment Return Pipe		$ -	$ 150,000	$ -	$ 150,000	$ -	$ 150,000
Sub-Total		$ -	$ 4,070,000	$ -	$ 4,070,000	$ -	$ 4,070,000
CIEMP Listed Projects							
Cold Weather NBT Supply System A		$ 2,850,000	$ 2,850,000	$ 2,850,000	$ 2,850,000	$ -	$ -
Secondary BioTowers Rehabilitation A		$ 14,870,000	$ 14,870,000	$ 14,870,000	$ 14,870,000	$ -	$ -
Secondary Clarifiers Rehabilitation A		$ 610,000	$ 610,000	$ 610,000	$ 610,000	$ 610,000	$ 610,000
Fifth Secondary Clarifier A		$ 3,070,000	$ 3,070,000	$ 3,070,000	$ 3,070,000	$ 3,070,000	$ 3,070,000
Secondary Effluent PS Project #2 A		$ 2,040,000	$ 2,040,000	$ 2,040,000	$ 2,040,000	$ 2,040,000	$ 2,040,000
Primary Clarifier Improvements A							
Primary Clarifier Improvements One-Quarter A		$ 310,000	$ 310,000	$ 310,000	$ 310,000	$ 310,000	$ 310,000
Third NBT A		$ -	$ -	$ 8,880,000	$ -	$ -	$ -
DAF Unit Rehabilitation A		$ 3,090,000	$ 3,090,000	$ 3,090,000	$ 3,090,000	$ 3,090,000	$ 3,090,000
Tertiary Filters Rehabilitation A		$ 1,560,000	$ 1,560,000	$ 1,560,000	$ 1,560,000	$ 1,560,000	$ 1,560,000
Oxidation Ponds Rehabilitation A		$ 1,920,000	$ 1,920,000	$ 1,920,000	$ 1,920,000	$ 1,920,000	$ 1,920,000
Tertiary Filters for Denitrification A		$ -	$ -	$ -	$ -	$ -	$ -
Sub-Total		$ 30,320,000	$ 30,320,000	$ 39,200,000	$ 30,320,000	$ 12,600,000	$ 12,600,000
A. Raw Estimate		$ 53,000,000	$ 57,000,000	$ 62,800,000	$ 57,900,000	$ 57,900,000	$ 58,600,000
B. Undefined Unit Processes	A X 0.1	$ 5,300,000	$ 5,700,000	$ 6,300,000	$ 5,800,000	$ 5,800,000	$ 5,900,000
C. Miscellaneous Site Structures	A X 0.1	$ 5,300,000	$ 5,700,000	$ 6,300,000	$ 5,800,000	$ 5,800,000	$ 5,900,000
D. Unit Process Subtotal	(A + B + C)	$ 63,600,000	$ 68,400,000	$ 75,400,000	$ 69,500,000	$ 69,500,000	$ 70,400,000
E. Sitework	D X 0.14	$ 8,900,000	$ 9,600,000	$ 10,600,000	$ 9,700,000	$ 9,700,000	$ 9,900,000
G. Soil Conditions	D X 0.07	$ 4,500,000	$ 4,800,000	$ 5,300,000	$ 4,900,000	$ 4,900,000	$ 4,900,000
H. Site Electrical Power Distribution	D X 0.2	$ 12,700,000	$ 13,700,000	$ 15,100,000	$ 13,900,000	$ 13,900,000	$ 14,100,000
I. Construction Subtotal (Excluding Contingency)	(D+E+F+G)	$ 89,700,000	$ 96,500,000	$ 106,400,000	$ 98,000,000	$ 98,000,000	$ 99,300,000
J. Misc. Items Not Itemized	H X 0.25	$ 22,400,000	$ 24,100,000	$ 26,600,000	$ 24,500,000	$ 24,500,000	$ 24,800,000
K. Construction Subtotal (Including Contingency)	(H+I)	$ 112,100,000	$ 120,600,000	$ 133,000,000	$ 122,500,000	$ 122,500,000	$ 124,100,000
L. Engineering, Legal, Admin, Contractor	J X 0.25	$ 28,000,000	$ 30,200,000	$ 33,300,000	$ 30,600,000	$ 30,600,000	$ 31,000,000
M. Total Project Capital Cost	[J + K]	$ 140,100,000	$ 150,800,000	$ 166,300,000	$ 153,100,000	$ 153,100,000	$ 155,100,000

Alt 1 A

Rates	
Discount Rate	6.50%
Capital Inflation Rate (MR)	1.035
Energy Inflation Rate	1.035
Non-Energy Inflation Rate	1.035

Capital Costs ($ in 2012 dollars)		
Capital Cost =	$	140,100,000

Annual Energy Costs ($/year in 2014 dollars)	
Energy	87,925

Chemical Costs ($/year in 2014 dollars)	
Chemicals	6,577,627

Year by Year Life Cycle Cost Table

	Growth Projections per Year =		0.0%	0.5%	1.0%	1.0%	1.0%	1.0%	1.0%	2.5%	2.5%	2.5%
Cost Category		NPV	Year 1	Year 2	Year 3	Year 4	Year 5	Year 6	Year 7	Year 8	Year 9	Year 10
Capital Cost	$	140,100,000	-	-	-	-	-	-	-	-	-	-
Energy	$	1,474,144	87,925	91,458	95,605	99,941	104,473	109,211	114,164	121,114	128,487	136,308
Chemicals	$	110,279,459	6,577,627	6,841,883	7,152,163	7,476,513	7,815,573	8,170,009	8,540,519	9,060,423	9,611,977	10,197,106
Total Present Worth	**$**	**251,853,603**	6,665,553	6,933,341	7,247,768	7,576,454	7,920,047	8,279,221	8,654,683	9,181,537	9,740,463	10,333,414
Annual Operating Costs	$		6,665,553	6,933,341	7,247,768	7,576,454	7,920,047	8,279,221	8,654,683	9,181,537	9,740,463	10,333,414
Total Annualized Capital Cost	$		12,714,971	12,714,971	12,714,971	12,714,971	12,714,971	12,714,971	12,714,971	12,714,971	12,714,971	12,714,971
Cost Category			Year 11	Year 12	Year 13	Year 14	Year 15	Year 16	Year 17	Year 18	Year 19	Year 20
Capital Cost	$		-	-	-	-	-	-	-	-	-	-
Energy	$		144,606	153,409	162,748	172,655	183,165	194,315	206,144	218,693	232,006	246,130
Chemicals	$		10,817,855	11,476,392	12,175,017	12,916,171	13,702,443	14,536,579	15,421,493	16,360,277	17,356,209	18,412,768
Total Present Worth			10,962,461	11,629,800	12,337,765	13,088,826	13,885,608	14,730,895	15,627,638	16,578,970	17,588,215	18,658,898
Annual Operating Costs	$		10,962,461	11,629,800	12,337,765	13,088,826	13,885,608	14,730,895	15,627,638	16,578,970	17,588,215	18,658,898
Total Annualized Capital Cost	$		12,714,971	12,714,971	12,714,971	12,714,971	12,714,971	12,714,971	12,714,971	12,714,971	12,714,971	12,714,971

Alt 1 B

Rates	
Discount Rate	6.50%
Capital Inflation Rate (MR)	1.035
Energy Inflation Rate	1.035
Non-Energy Inflation Rate	1.035

Capital Costs ($ in 2012 dollars)		
Capital Cost =	$	150,800,000

Annual Energy Costs ($/year in 2014 dollars)	
Energy	222,834

Chemical Costs ($/year in 2014 dollars)	
Chemicals	4,899,661

Year by Year Life Cycle Cost Table

	Growth Projections per Year =		0.0%	0.5%	1.0%	1.0%	1.0%	1.0%	1.0%	2.5%	2.5%	2.5%
Cost Category		NPV	Year 1	Year 2	Year 3	Year 4	Year 5	Year 6	Year 7	Year 8	Year 9	Year 10
Capital Cost	$	150,800,000	-	-	-	-	-	-	-	-	-	-
Energy	$	3,735,998	222,834	231,786	242,298	253,286	264,772	276,780	289,332	306,945	325,630	345,453
Chemicals	$	82,146,944	4,899,661	5,096,505	5,327,631	5,569,239	5,821,804	6,085,823	6,361,815	6,749,091	7,159,942	7,595,803
Total Present Worth	**$**	**236,682,942**	5,122,495	5,328,291	5,569,929	5,822,525	6,086,577	6,362,603	6,651,147	7,056,036	7,485,572	7,941,256
Annual Operating Costs	$		5,122,495	5,328,291	5,569,929	5,822,525	6,086,577	6,362,603	6,651,147	7,056,036	7,485,572	7,941,256
Total Annualized Capital Cost	$		13,686,064	13,686,064	13,686,064	13,686,064	13,686,064	13,686,064	13,686,064	13,686,064	13,686,064	13,686,064
Cost Category			Year 11	Year 12	Year 13	Year 14	Year 15	Year 16	Year 17	Year 18	Year 19	Year 20
Capital Cost	$		-	-	-	-	-	-	-	-	-	-
Energy	$		366,482	388,792	412,460	437,568	464,205	492,464	522,442	554,246	587,986	623,779
Chemicals	$		8,058,198	8,548,741	9,069,145	9,621,229	10,206,922	10,828,268	11,487,439	12,186,737	12,928,604	13,715,633
Total Present Worth			8,424,680	8,937,533	9,481,605	10,058,798	10,671,127	11,320,732	12,009,881	12,740,983	13,516,590	14,339,413
Annual Operating Costs	$		8,424,680	8,937,533	9,481,605	10,058,798	10,671,127	11,320,732	12,009,881	12,740,983	13,516,590	14,339,413
Total Annualized Capital Cost	$		13,686,064	13,686,064	13,686,064	13,686,064	13,686,064	13,686,064	13,686,064	13,686,064	13,686,064	13,686,064

Alt 2 A

Rates	
Discount Rate	6.50%
Capital Inflation Rate (MR)	1.035
Energy Inflation Rate	1.035
Non-Energy Inflation Rate	1.035

Capital Costs ($ in 2012 dollars)		
Capital Cost =	$	166,300,000

Annual Energy Costs ($/year in 2014 dollars)	
Energy	87,925

Chemical Costs ($/year in 2014 dollars)	
Chemicals	5,369,492

Year by Year Life Cycle Cost Table

	Growth Projections per Year =	0.0%	0.5%	1.0%	1.0%	1.0%	1.0%	1.0%	2.5%	2.5%	2.5%
Cost Category	NPV	Year 1	Year 2	Year 3	Year 4	Year 5	Year 6	Year 7	Year 8	Year 9	Year 10
Capital Cost	$ 166,300,000	-	-	-	-	-	-	-	-	-	-
Energy	$ 1,474,144	87,925	91,458	95,605	99,941	104,473	109,211	114,164	121,114	128,487	136,308
Chemicals	$ 90,024,048	5,369,492	5,585,211	5,838,500	6,103,276	6,380,060	6,669,395	6,971,853	7,396,264	7,846,512	8,324,168
Total Present Worth	**$ 257,798,192**	5,457,417	5,676,669	5,934,106	6,203,217	6,484,533	6,778,607	7,086,017	7,517,378	7,974,998	8,460,476
Annual Operating Costs	$	5,457,417	5,676,669	5,934,106	6,203,217	6,484,533	6,778,607	7,086,017	7,517,378	7,974,998	8,460,476
Total Annualized Capital Cost	$	15,092,789	15,092,789	15,092,789	15,092,789	15,092,789	15,092,789	15,092,789	15,092,789	15,092,789	15,092,789
Cost Category		Year 11	Year 12	Year 13	Year 14	Year 15	Year 16	Year 17	Year 18	Year 19	Year 20
Capital Cost	$	-	-	-	-	-	-	-	-	-	-
Energy	$	144,606	153,409	162,748	172,655	183,165	194,315	206,144	218,693	232,006	246,130
Chemicals	$	8,830,902	9,368,483	9,938,789	10,543,813	11,185,668	11,866,595	12,588,974	13,355,328	14,168,334	15,030,831
Total Present Worth		8,975,508	9,521,892	10,101,537	10,716,468	11,368,833	12,060,911	12,795,119	13,574,021	14,400,340	15,276,961
Annual Operating Costs	$	8,975,508	9,521,892	10,101,537	10,716,468	11,368,833	12,060,911	12,795,119	13,574,021	14,400,340	15,276,961
Total Annualized Capital Cost	$	15,092,789	15,092,789	15,092,789	15,092,789	15,092,789	15,092,789	15,092,789	15,092,789	15,092,789	15,092,789

Alt 2 B

Rates	
Discount Rate	6.50%
Capital Inflation Rate (MR)	1.035
Energy Inflation Rate	1.035
Non-Energy Inflation Rate	1.035

Capital Costs ($ in 2012 dollars)		
Capital Cost =	$	153,100,000

Annual Energy Costs ($/year in 2014 dollars)	
Energy	222,834

Chemical Costs ($/year in 2014 dollars)	
Chemicals	3,960,000

Year by Year Life Cycle Cost Table

	Growth Projections per Year =	0.0%	0.5%	1.0%	1.0%	1.0%	1.0%	1.0%	2.5%	2.5%	2.5%
Cost Category	NPV	Year 1	Year 2	Year 3	Year 4	Year 5	Year 6	Year 7	Year 8	Year 9	Year 10
Capital Cost	$ 153,100,000	-	-	-	-	-	-	-	-	-	
Energy	$ 3,735,998	222,834	231,786	242,298	253,286	264,772	276,780	289,332	306,945	325,630	345,453
Chemicals	$ 66,392,736	3,960,000	4,119,093	4,305,894	4,501,166	4,705,294	4,918,679	5,141,741	5,454,745	5,786,802	6,139,074
Total Present Worth	**$ 223,228,734**	4,182,834	4,350,879	4,548,192	4,754,452	4,970,067	5,195,459	5,431,073	5,761,690	6,112,433	6,484,527
Annual Operating Costs	$	4,182,834	4,350,879	4,548,192	4,754,452	4,970,067	5,195,459	5,431,073	5,761,690	6,112,433	6,484,527
Total Annualized Capital Cost	$	13,894,804	13,894,804	13,894,804	13,894,804	13,894,804	13,894,804	13,894,804	13,894,804	13,894,804	13,894,804
Cost Category		Year 11	Year 12	Year 13	Year 14	Year 15	Year 16	Year 17	Year 18	Year 19	Year 20
Capital Cost	$	-	-	-	-	-	-	-	-	-	
Energy	$	366,482	388,792	412,460	437,568	464,205	492,464	522,442	554,246	587,986	623,779
Chemicals	$	6,512,790	6,909,256	7,329,857	7,776,062	8,249,430	8,751,614	9,284,368	9,849,554	10,449,146	11,085,238
Total Present Worth		6,879,272	7,298,048	7,742,317	8,213,630	8,713,635	9,244,078	9,806,811	10,403,800	11,037,132	11,709,017
Annual Operating Costs	$	6,879,272	7,298,048	7,742,317	8,213,630	8,713,635	9,244,078	9,806,811	10,403,800	11,037,132	11,709,017
Total Annualized Capital Cost	$	13,894,804	13,894,804	13,894,804	13,894,804	13,894,804	13,894,804	13,894,804	13,894,804	13,894,804	13,894,804

Alt 4 A

Rates	
Discount Rate	6.50%
Capital Inflation Rate (MR)	1.035
Energy Inflation Rate	1.035
Non-Energy Inflation Rate	1.035

Capital Costs ($ in 2012 dollars)	
Capital Cost =	$ 153,100,000

Annual Energy Costs ($/year in 2014 dollars)	
Energy	1,441,037

Chemical Costs ($/year in 2014 dollars)	
Chemicals	1,141,017

Year by Year Life Cycle Cost Table

	Growth Projections per Year =	0.0%	0.5%	1.0%	1.0%	1.0%	1.0%	1.0%	2.5%	2.5%	2.5%
Cost Category	NPV	Year 1	Year 2	Year 3	Year 4	Year 5	Year 6	Year 7	Year 8	Year 9	Year 10
Capital Cost	$ 153,100,000	-	-	-	-	-	-	-	-	-	-
Energy	$ 24,160,204	1,441,037	1,498,931	1,566,907	1,637,967	1,712,249	1,789,899	1,871,071	1,984,972	2,105,808	2,233,999
Chemicals	$ 19,130,110	1,141,017	1,186,857	1,240,681	1,296,946	1,355,763	1,417,247	1,481,519	1,571,706	1,667,384	1,768,886
Total Present Worth	**$ 196,390,314**	2,582,054	2,685,788	2,807,589	2,934,913	3,068,011	3,207,146	3,352,590	3,556,678	3,773,191	4,002,884
Annual Operating Costs	$	2,582,054	2,685,788	2,807,589	2,934,913	3,068,011	3,207,146	3,352,590	3,556,678	3,773,191	4,002,884
Total Annualized Capital Cost	$	15,092,789	15,092,789	15,092,789	15,092,789	15,092,789	15,092,789	15,092,789	15,092,789	15,092,789	15,092,789
Cost Category		Year 11	Year 12	Year 13	Year 14	Year 15	Year 16	Year 17	Year 18	Year 19	Year 20
Capital Cost	$	-	-	-	-	-	-	-	-	-	-
Energy	$	2,369,993	2,514,267	2,667,323	2,829,696	3,001,954	3,184,697	3,378,566	3,584,236	3,802,427	4,033,899
Chemicals	$	1,876,567	1,990,803	2,111,993	2,240,560	2,376,954	2,521,651	2,675,157	2,838,007	3,010,771	3,194,052
Total Present Worth		4,246,560	4,505,069	4,779,315	5,070,256	5,378,908	5,706,349	6,053,723	6,422,243	6,813,197	7,227,951
Annual Operating Costs	$	4,246,560	4,505,069	4,779,315	5,070,256	5,378,908	5,706,349	6,053,723	6,422,243	6,813,197	7,227,951
Total Annualized Capital Cost	$	15,092,789	15,092,789	15,092,789	15,092,789	15,092,789	15,092,789	15,092,789	15,092,789	15,092,789	15,092,789

Alt 4 B

Rates	
Discount Rate	6.50%
Capital Inflation Rate (MR)	1.035
Energy Inflation Rate	1.035
Non-Energy Inflation Rate	1.035

Capital Costs ($ in 2012 dollars)	
Capital Cost =	$ 155,100,000

Annual Energy Costs ($/year in 2014 dollars)	
Energy	1,459,831

Chemical Costs ($/year in 2014 dollars)	
Chemicals	939,661

Year by Year Life Cycle Cost Table

	Growth Projections per Year =	0.0%	0.5%	1.0%	1.0%	1.0%	1.0%	1.0%	2.5%	2.5%	2.5%
Cost Category	NPV	Year 1	Year 2	Year 3	Year 4	Year 5	Year 6	Year 7	Year 8	Year 9	Year 10
Capital Cost	$ 155,100,000	-	-	-	-	-	-	-	-	-	
Energy	$ 24,475,288	1,459,831	1,518,479	1,587,342	1,659,328	1,734,579	1,813,242	1,895,472	2,010,859	2,133,270	2,263,133
Chemicals	$ 15,754,208	939,661	977,412	1,021,738	1,068,073	1,116,510	1,167,144	1,220,074	1,294,346	1,373,140	1,456,729
Total Present Worth	**$ 195,329,497**	2,399,492	2,495,891	2,609,080	2,727,402	2,851,089	2,980,386	3,115,547	3,305,205	3,506,410	3,719,863
Annual Operating Costs	$	2,399,492	2,495,891	2,609,080	2,727,402	2,851,089	2,980,386	3,115,547	3,305,205	3,506,410	3,719,863
Total Annualized Capital Cost	$	13,894,804	13,894,804	13,894,804	13,894,804	13,894,804	13,894,804	13,894,804	13,894,804	13,894,804	13,894,804
Cost Category		Year 11	Year 12	Year 13	Year 14	Year 15	Year 16	Year 17	Year 18	Year 19	Year 20
Capital Cost	$	-	-	-	-	-	-	-	-	-	
Energy	$	2,400,901	2,547,056	2,702,108	2,866,599	3,041,103	3,226,231	3,422,627	3,630,980	3,852,016	4,086,507
Chemicals	$	1,545,408	1,639,485	1,739,288	1,845,167	1,957,492	2,076,654	2,203,070	2,337,182	2,479,458	2,630,395
Total Present Worth		3,946,309	4,186,541	4,441,396	4,711,766	4,998,595	5,302,885	5,625,698	5,968,162	6,331,474	6,716,903
Annual Operating Costs	$	3,946,309	4,186,541	4,441,396	4,711,766	4,998,595	5,302,885	5,625,698	5,968,162	6,331,474	6,716,903
Total Annualized Capital Cost	$	13,894,804	13,894,804	13,894,804	13,894,804	13,894,804	13,894,804	13,894,804	13,894,804	13,894,804	13,894,804