Golder Associates Inc.

198 Cirby Way, Suite 105
Roseville, CA USA 95678
Telephone (916) 786-2424
Fax (916) 786-2434

Golder Associates

993-7144

RECEIVED
SACRAMENTO
CVRWQCB
00 AUG -1 PM 2:40

June 29, 2000

Norcal Waste Systems, Inc.
235 North First Street
Dixon, California 95620

ATTN: Mr. Tim Daleiden

RE: DESIGN REPORT AND CONSTRUCTION DOCUMENTS B&J SANITARY LANDFILL, DISPOSAL MODULE 5.1 SOLANO COUNTY, CALIFORNIA

Golder Associates Inc. (Golder) is pleased to submit this design report and attached construction documents for the construction of Disposal Module (DM) 5.1 at the B&J Drop Box Sanitary Landfill in Solano County, California. B&J Drop Box, Inc., a subsidiary of Norcal Waste Systems (B&J), owns and operates the landfill as a Class II solid waste disposal facility. This report presents the grading plan and base liner design for DM 5.1, which has been designed as a Class II disposal unit in compliance with the design requirements specified in the site's Waste Discharge Requirements (WDR's) Order No. 97-145. DM 5.1 will be constructed in two stages, with general fill placement commencing Summer 2000, followed by the capillary break and composite base liner construction in 2001. Figure 1 shows the site development plan and the limits of the DM 5.1 base liner.

1. FINAL BASE GRADING

The grading plan for DM 5.1 conforms to the minimum ground water separation requirements developed by Geosyntec (1995) and stipulated in WDR Order No. 97-145.

Grading for DM 5.1 will involve excavation or placement of general fill to the design grades shown on Drawing 3 of the construction plans (Appendix A). The final base grades maintain a minimum 2 percent grade on the floor and 1 percent grade along the Leachate Collection and Removal System (LCRS) drainage pipes, which are consistent with the construction of previous cells at the site. The base grading and construction requirements are designed to provide positive drainage to the collection sump and to provide a firm, stable foundation for the containment system.

The interior slopes of the perimeter levee will be graded to 2H:1V (Horizontal to Vertical) with a crest elevation of 40 feet mean sea level (msl).

The minimum elevation of the containment system is based on the maximum anticipated groundwater elevation. This maximum elevation is interpolated to be 19.8

CONSTRUCTION DRAWINGS

B&J DROP BOX SANITARY LANDFILL DISPOSAL MODULE 5.1

SOLANO COUNTY, CALIFORNIA

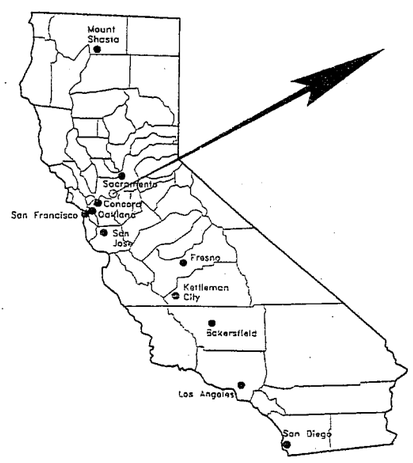

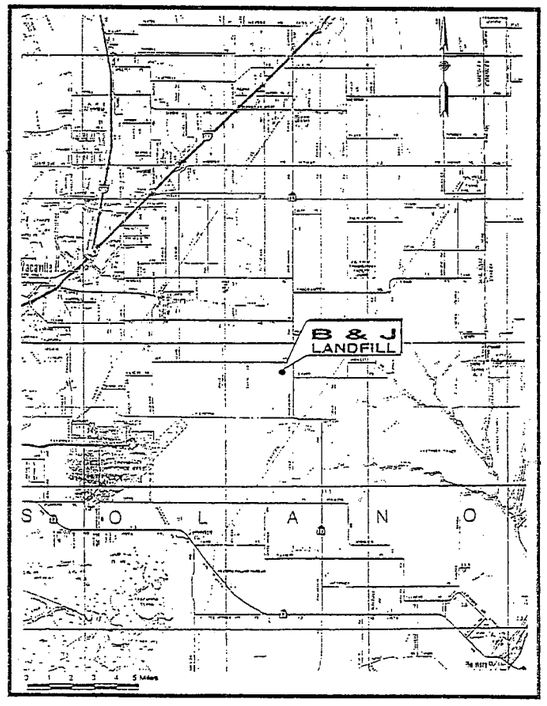

LOCATION MAP

DRAWING NO.	TITLE
1	COVER SHEET
2	SITE PLAN
3	SUBGRADE PLAN
4	CROSS-SECTIONS
5	SUMP PLAN AND DETAILS
6	CONTAINMENT SYSTEM DETAILS
7	EXISTING SOIL BORROW CONDITIONS
8	SOIL BORROW AREA EXCAVATION PLAN
9	ACCESS ROAD PLAN STA 0+00 TO 9+00
10	ACCESS ROAD PLAN STA 9+00 TO 18+00
11	SUBGRADE SURVEY GRID PLAN

PREPARED BY:

REGISTERED PROFESSIONAL ENGINEER KENNETH G. HARRIS NO. C53290 CIVIL STATE OF CALIFORNIA

Golder Associates
Roseville, California

PROJECT NO.: 993-7144
PREPARED: JUNE 2000

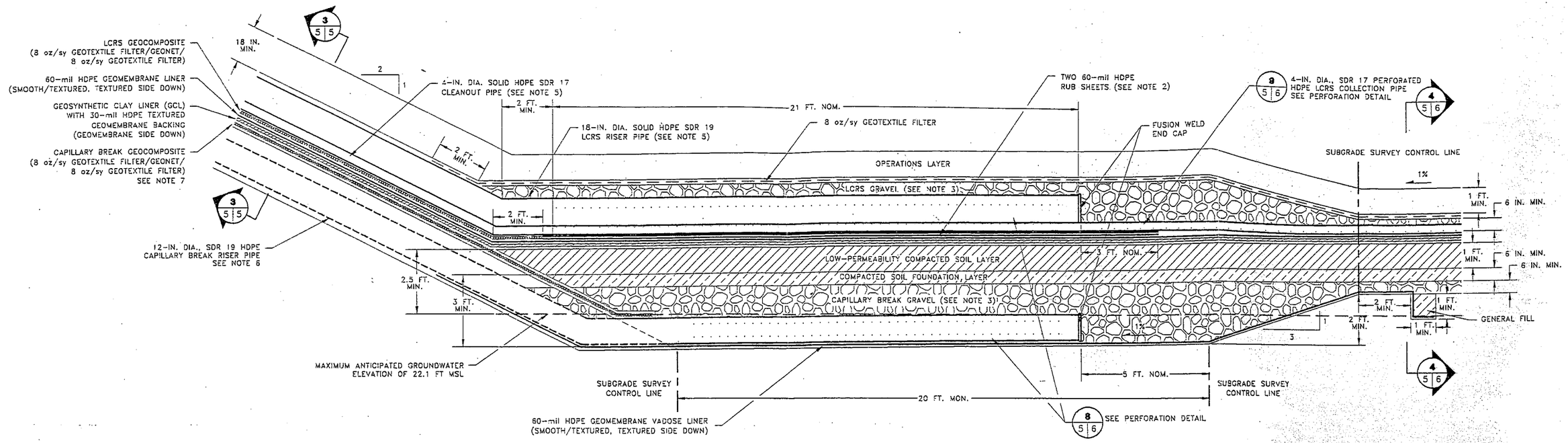

2 SUMP DETAIL

0 2 4 FEET

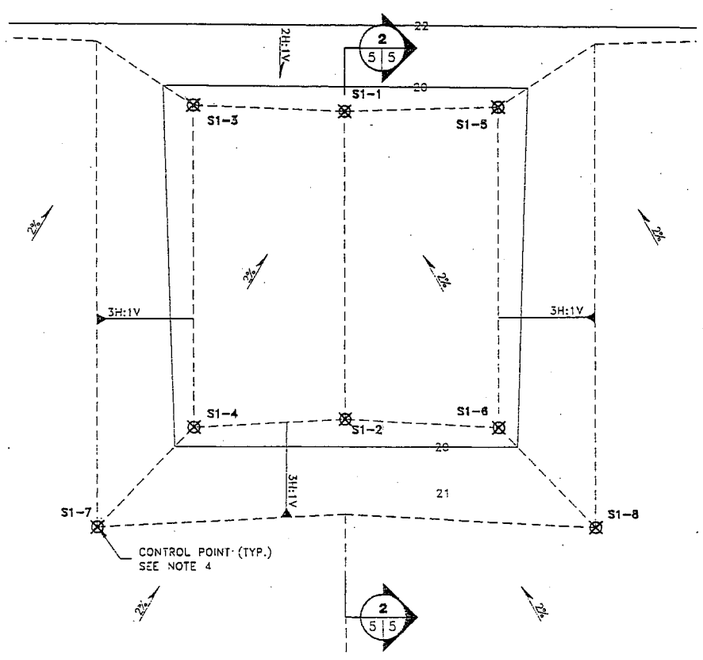

1 SUMP SUBGRADE PLAN

0 6 12 FEET

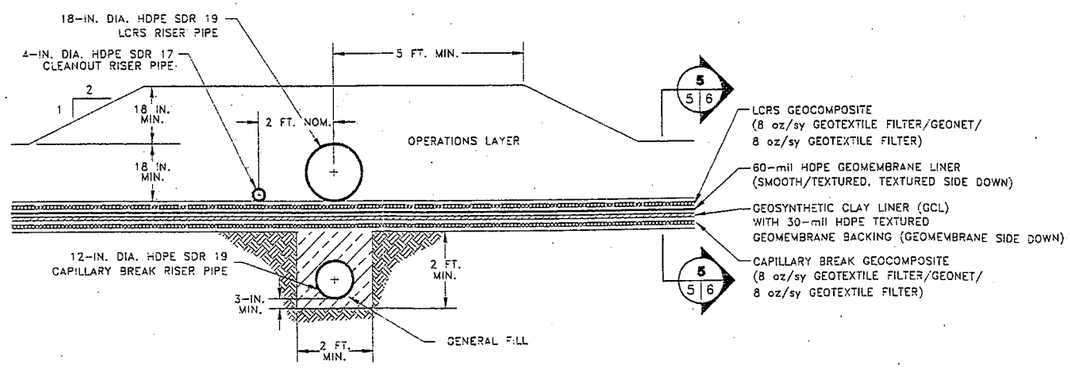

3 TYPICAL RISER PIPE TRENCH DETAIL

0 2 4 FEET

NOTES:

1) GEOSYNTHETICS THICKNESS EXAGGERATED FOR CLARITY.
2) TWO 5 FT WIDE 60-mil HDPE RUB SHEETS OR ONE 5 FT WIDE GEOCOMPOSITE RUB SHEET SHALL BE PLACED UNDER THE 18 IN. DIAMETER LCRS PIPE WHERE IT LAYS OVER THE FLOOR GEOMEMBRANE. EXTEND RUB SHEET 2-FEET UP SLOPE.
3) GRAVEL SHALL CONSIST OF 3/8-INCH PEA GRAVEL PER PROJECT SPECIFICATIONS.
4) REFER TO DRAWING 3 FOR CONTROL POINT LISTINGS: S1 SERIES FOR SUMP 1; S2 SERIES FOR SUMP 2.
5) EXTEND LCRS AND CLEAN-OUT RISER PIPE INVERT TWO FEET VERTICALLY ABOVE BERM CREST ELEVATION. CAP PIPES WITH LOCKING END CAPS. CLEANOUT RISER PIPE IS OFFSET TWO FEET FROM LCRS RISER PIPE.
6) EXTEND CAPILLARY BREAK RISER PIPE INVERT ONE FOOT VERTICALLY ABOVE BERM CREST ELEVATION. CAP PIPE WITH LOCKING END CAPS.
7) EXTEND CAPILLARY BREAK GEOCOMPOSITE A MINIMUM OF 3 FEET ONTO FLOOR.

LEGEND:

2H:1V	SLOPE INDICATOR
2/1	SLOPE INDICATOR
2%	GRADE INDICATOR
S-1	CONTROL POINT SEE NOTE 4

A / 0 2 — DETAIL/SECTION DESIGNATION; DRAWING WHERE SECTION/DETAIL IS LOCATED; DRAWING WHERE SECTION/DETAIL IS REFERENCED

REV.	DATE	DESCRIPTION	DRN BY	RVW BY

Golder Associates
198 Cirby Way
Suite 105
Roseville, CA 95678
Tel: (916) 786-2424
Fax: (916) 786-2434

REGISTERED PROFESSIONAL ENGINEER KENNETH G. HAY NO. C53290 CIVIL STATE OF CALIFORNIA

DES BY	KGH	PROJECT NO.: 993-7144	TASK NO.: 3
DRN BY	BFM	PROJECT: B&J SANITARY LANDFILL DISPOSAL MODULE 5.1	
CHK BY	PEB	SHEET TITLE: SUMP PLANS AND DETAILS	
RVW BY	KGH		

B&J DROP BOX, INC.
6426 HAY ROAD
VACAVILLE, CALIFORNIA 95688
TEL: (916) 678-4718

SHEET: 5 OF 11

DRAWING NO.	REV.
5	0