CALIFORNIA REGIONAL WATER QUALITY CONTROL BOARD

CENTRAL VALLEY REGION

11020 Sun Center Drive, #200 Rancho Cordova, California 95670-6114
Phone (916) 464-3291 Ÿ Fax (916) 464-4645
http://www.waterboards.ca.gov/centralvalley

ORDER R5-2013-0146-01
NPDES NO. CA0079391

WASTE DISCHARGE REQUIREMENTS FOR THE CITY OF JACKSON WASTEWATER TREATMENT PLANT AMADOR COUNTY

The following Discharger is subject to waste discharge requirements as set forth in this Order:

Table 1. Discharger Information

Discharger	City of Jackson
Name of Facility	Wastewater Treatment Plant
Facility Address	39 North Highway 49-88
	Jackson, CA 95642
	Amador County
The U.S. Environmental Protection Agency (USEPA) and the Regional Water Quality Control Board have classified this discharge as a minor discharge.	

The discharge by the City of Jackson from the discharge points identified below is subject to waste discharge requirements as set forth in this Order:

Table 2. Discharge Location

Discharge Point	Effluent Description	Discharge Point Latitude	Discharge Point Longitude	Receiving Water
001	Treated Municipal Wastewater	38° 30’ 28” N	120° 14’ 04” W	Jackson Creek

Table 3. Administrative Information

This Order was adopted by the Regional Water Quality Control Board on:	**5 December 2013**
This Order shall become effective on:	**24 January 2014**
This Order shall expire on:	**1 December 2018**
The Discharger shall file a Report of Waste Discharge in accordance with title 23, California Code of Regulations, as application for issuance of new waste discharge requirements no later than:	**180 days prior to the Order expiration date**

I, **PAMELA C. CREEDON**, Executive Officer, do hereby certify that this Order with all attachments is a full, true, and correct copy of an Order adopted by the California Regional Water Quality Control Board, Central Valley Region, on **5 December 2013, and amended on XX February 2015**.

Original Signed by

_____

PAMELA C. CREEDON, Executive Officer

Table of Contents

I. Facility Information 3
II. Findings 3
III. Discharge Prohibitions 9
IV. Effluent Limitations and Discharge Specifications 10
A. Effluent Limitations – Discharge Point No. 001 10
B. Land Discharge Specifications – Not Applicable 11
C. Reclamation Specifications – Not Applicable 11
V. Receiving Water Limitations 11
A. Surface Water Limitations 11
B. Groundwater Limitations – Not Applicable 13
VI. Provisions 13
A. Standard Provisions 13
B. Monitoring and Reporting Program Requirements 18
C. Special Provisions 18
1. Reopener Provisions 18
2. Special Studies, Technical Reports and Additional Monitoring Requirements 19
3. Best Management Practices and Pollution Prevention 21
4. Construction, Operation and Maintenance Specifications 21
5. Special Provisions for Municipal Facilities (POTWs Only) 22
6. Other Special Provisions 24
7. Compliance Schedules – Not Applicable 24
VII. Compliance Determination 24

List of Tables

Table 1. Discharger Information 1
Table 2. Discharge Location 1
Table 3. Administrative Information 1
Table 4. Facility Information 3
Table 5. Basin Plan Beneficial Uses 5
Table 6. Effluent Limitations 10

List of Attachments

Attachment A – Definitions A-1
Attachment B – Maps B-1
Attachment C – Flow Schematic C-1
Attachment D – Standard Provisions D-1
Attachment E – Monitoring and Reporting Program E-1
Attachment F – Fact Sheet F-1
Attachment G – Summary of Reasonable Potential Analysis for Constituents of Concern G-1
Attachment H – Calculation of WQBELs H-1
Attachment I – Effluent and Receiving Water Characterization Study I-1

I. FACILITY INFORMATION

The following Discharger is subject to waste discharge requirements as set forth in this Order:

Table 4. Facility Information

Discharger	City of Jackson
Name of Facility	Wastewater Treatment Plant
Facility Address	39 North Highway 49-88
	Jackson, CA 95642
	Amador County
Facility Contact, Title, and Phone	Eric Neuschmid, Chief Plant Operator, (209) 223-1607
Mailing Address	33 Broadway, Jackson, CA 95642
Type of Facility	Publicly Owned Treatment Works (POTW)
Facility Design Flow	0.71 million gallons per day (MGD), average dry weather flow

II. FINDINGS

The California Regional Water Quality Control Board, Central Valley Region (hereinafter Central Valley Water Board), finds:

A. Background. The City of Jackson (hereinafter Discharger) was authorized to discharge pursuant to Order R5-2007-0133-01 and National Pollutant Discharge Elimination System (NPDES) Permit No. CA0079391. The Discharger submitted a Report of Waste Discharge, dated 29 March 2012, and applied for a NPDES permit renewal to discharge up to 0.71 MGD of treated wastewater from the City of Jackson Wastewater Treatment Plant, hereinafter Facility. The application was deemed complete on 9 October 2012.

For the purposes of this Order, references to the “discharger” or “permittee” in applicable federal and state laws, regulations, plans, or policy are held to be equivalent to references to the Discharger herein.

B. Facility Description. The Discharger owns and operates a POTW. The treatment system consists of a headworks, two oxidation ditches, two secondary clarifiers, chlorine injection, one train of four sand filters, chlorine contact basin, and sulfur dioxide dechlorination. Wastewater is discharged from Discharge Point No. 001 (see table on cover page) to the Jackson Creek, a water of the United States, and a tributary to Amador Lake within the Mokelumne River watershed. Attachment B provides a map of the area around the Facility. Attachment C provides a flow schematic of the Facility.

C. Legal Authorities. This Order is issued pursuant to section 402 of the Clean Water Act (CWA) and implementing regulations adopted by USEPA and chapter 5.5, division 7 of the California Water Code (Water Code; commencing with section 13370). It shall serve as a NPDES permit for point source discharges from this facility to surface waters. This Order also serves as Waste Discharge Requirements (WDRs) pursuant to article 4, chapter 4, division 7 of the Water Code (commencing with section 13260).

D. Background and Rationale for Requirements. The Central Valley Water Board developed the requirements in this Order based on information submitted as part of the application, through monitoring and reporting programs, and other available information. The Fact Sheet (Attachment F), which contains background information and rationale for Order requirements, is hereby incorporated into this Order and constitutes part of the Findings for this Order. Attachments A through E and G through J are also incorporated into this Order.

E. California Environmental Quality Act (CEQA). Under Water Code section 13389, this action to adopt an NPDES permit is exempt from the provisions of CEQA, Public Resources Code sections 21100-21177.

F. Technology-based Effluent Limitations. Section 301(b) of the CWA and implementing USEPA permit regulations at section 122.44, title 40 of the Code of Federal Regulations (40 CFR 122.44), require that permits include conditions meeting applicable technology-based requirements at a minimum, and any more stringent effluent limitations necessary to meet applicable water quality standards. The discharge authorized by this Order must meet minimum federal technology-based requirements based on Secondary Treatment Standards at 40 CFR Part 133. A detailed discussion of the technology-based effluent limitations development is included in the Fact Sheet.

G. Water Quality-based Effluent Limitations (WQBELs). Section 301(b) of the CWA and 40 CFR 122.44(d) require that permits include limitations more stringent than applicable federal technology-based requirements where necessary to achieve applicable water quality standards. This Order contains requirements, expressed as technology equivalence requirements, which are necessary to achieve water quality standards. The Central Valley Water Board has considered the factors listed in Water Code section 13241 in establishing these requirements. The rationale for these requirements, which consist of tertiary treatment or equivalent requirements, is discussed in the Fact Sheet.

40 CFR 122.44(d)(1)(i) mandates that permits include effluent limitations for all pollutants that are or may be discharged at levels that have the reasonable potential to cause or contribute to an exceedance of a water quality standard, including numeric and narrative objectives within a standard. Where reasonable potential has been established for a pollutant, but there is no numeric criterion or objective for the pollutant, WQBELs must be established using: (1) USEPA criteria guidance under CWA section 304(a), supplemented where necessary by other relevant information; (2) an indicator parameter for the pollutant of concern; or (3) a calculated numeric water quality criterion, such as a proposed state criterion or policy interpreting the state's narrative criterion, supplemented with other relevant information, as provided in 40 CFR 122.44(d)(1)(vi).

H. Water Quality Control Plans. The Central Valley Water Board adopted a *Water Quality Control Plan, Fourth Edition (Revised October 2011)*, for the Sacramento and San Joaquin River Basins (hereinafter Basin Plan) that designates beneficial uses, establishes water quality objectives, and contains implementation programs and policies to achieve those objectives for all waters addressed through the plan. The Basin Plan

at page II-2.00 states that the "…*beneficial uses of any specifically identified water body generally apply to its tributary streams*." Table II-1 of the Basin Plan identifies the beneficial uses of certain specific water bodies. The Basin Plan does not specifically identify beneficial uses for Jackson Creek, but does identify present and potential uses in Table II-1 for the Sacramento-San Joaquin Delta, to which Jackson Creek, via Amador Lake, Dry Creek, and the Mokelumne River, is tributary. In addition, the Basin Plan implements State Water Resources Control Board (State Water Board) Resolution No. 88-63, which established state policy that all waters, with certain exceptions, should be considered suitable or potentially suitable for municipal or domestic supply. Thus, as discussed in detail in the Fact Sheet, beneficial uses applicable to Jackson Creek are as follows:

Table 5. Basin Plan Beneficial Uses

Discharge Point	Receiving Water Name	Beneficial Use(s)
001	Jackson Creek	Existing uses from Table II-1 of the Basin Plan: Municipal and domestic supply (MUN); Agricultural supply, including irrigation and stock watering (AGR); Industrial process supply (PROC); Industrial service supply (IND); Water contact recreation (REC-1); Non-contact water recreation (REC-2); Warm freshwater habitat (WARM); Cold freshwater habitat (COLD); Migration of aquatic organisms, warm and cold (MIGR); Spawning, reproduction, and/or early development, warm (SPWN); Wildlife habitat (WILD); and Navigation (NAV).

The Basin Plan includes a list of Water Quality Limited Segments (WQLSs), which are defined as "…*those sections of lakes, streams, rivers or other fresh water bodies where water quality does not meet (or is not expected to meet) water quality standards even after the application of appropriate limitations for point sources (40 CFR 130, et seq.)*." The Basin Plan also states, "*Additional treatment beyond minimum federal standards will be imposed on dischargers to WQLSs. Dischargers will be assigned or allocated a maximum allowable load of critical pollutants so that water quality objectives can be met in the segment*." Jackson Creek is not listed as a WQLS on the 2010 303(d) list. Amador Lake is listed as a WQLS for high pH on the 303(d) list of impaired water bodies. Effluent limitations for pH are included in this Order.

Requirements of this Order implement the Basin Plan.

I. **National Toxics Rule (NTR) and California Toxics Rule (CTR).** USEPA adopted the NTR on 22 December 1992, and later amended it on 4 May 1995 and 9 November 1999. About 40 criteria in the NTR applied in California. On 18 May 2000, USEPA adopted the CTR. The CTR promulgated new toxics criteria for California and, in addition, incorporated the previously adopted NTR criteria that were applicable in the

state. The CTR was amended on 13 February 2001. These rules contain water quality criteria for priority pollutants.

J. State Implementation Policy. On 2 March 2000, the State Water Board adopted the *Policy for Implementation of Toxics Standards for Inland Surface Waters, Enclosed Bays, and Estuaries of California* (State Implementation Policy or SIP). The SIP became effective on 28 April 2000 with respect to the priority pollutant criteria promulgated for California by USEPA through the NTR and to the priority pollutant objectives established by the Central Valley Water Board in the Basin Plan. The SIP became effective on 18 May 2000 with respect to the priority pollutant criteria promulgated by USEPA through the CTR. The State Water Board adopted amendments to the SIP on 24 February 2005 that became effective on 13 July 2005. The SIP establishes implementation provisions for priority pollutant criteria and objectives and provisions for chronic toxicity control. Requirements of this Order implement the SIP.

K. Compliance Schedules and Interim Requirements. In general, an NPDES permit must include final effluent limitations that are consistent with CWA section 301 and with 40 CFR 122.44(d). There are exceptions to this general rule. The State Water Board's *Policy for Compliance Schedules in National Pollutant Discharge Elimination System Permits* (Compliance Schedule Policy) allows compliance schedules for new, revised, or newly interpreted water quality objectives or criteria, or in accordance with a total maximum daily load (TMDL). All compliance schedules must be as short as possible, and may not exceed ten years from the effective date of the adoption, revision, or new interpretation of the applicable water quality objective or criterion, unless a TMDL allows a longer schedule. A Regional Water Board, however, is not required to include a compliance schedule, but may issue a Time Schedule Order pursuant to Water Code section 13300 or a Cease and Desist Order pursuant to Water Code section 13301 where it finds that the discharger is violating or threatening to violate the permit. The Central Valley Water Board will consider the merits of each case in determining whether it is appropriate to include a compliance schedule in a permit, and, consistent with the Compliance Schedule Policy, should consider feasibility of achieving compliance, and must impose a schedule that is as short as possible to achieve compliance with the effluent limit based on the objective or criteria.

The Compliance Schedule Policy and the SIP do not allow compliance schedules for priority pollutants beyond 18 May 2010, except for new or more stringent priority pollutant criteria adopted by USEPA after 17 December 2008.

Where a compliance schedule for a final effluent limitation exceeds one year, the Order must include interim numeric limitations for that constituent or parameter, interim milestones and compliance reporting within 14 days after each interim milestone. The permit may also include interim requirements to control the pollutant, such as pollutant minimization and source control measures.

L. Alaska Rule. On 30 March 2000, USEPA revised its regulation that specifies when new and revised state and tribal water quality standards become effective for CWA purposes. (40 CFR 131.21 and 65 FR 24641 (27 April 2000).) Under the revised

regulation (also known as the Alaska rule), new and revised standards submitted to USEPA after 30 May 2000, must be approved by USEPA before being used for CWA purposes. The final rule also provides that standards already in effect and submitted to USEPA by 30 May 2000 may be used for CWA purposes, whether or not approved by USEPA.

M. Stringency of Requirements for Individual Pollutants. This Order contains both technology-based effluent limitations and WQBELs for individual pollutants. The technology-based effluent limitations consist of restrictions on flow and percent removal requirements for 5-day biochemical oxygen demand (BOD_5) and total suspended solids (TSS). The WQBELs consist of restrictions on ammonia, BOD_5, chlorine residual, chlorodibromomethane, cyanide, dichlorobromomethane, mercury, nitrate plus nitrite, pH, total coliform organisms, total trihalomethanes, and TSS. This Order's technology-based pollutant restrictions implement the minimum, applicable federal technology-based requirements. In addition, this Order includes effluent limitations for BOD_5, total coliform organisms, and TSS to meet numeric objectives or protect beneficial uses.

WQBELs have been scientifically derived to implement water quality objectives that protect beneficial uses. Both the beneficial uses and the water quality objectives have been approved pursuant to federal law and are the applicable federal water quality standards. To the extent that toxic pollutant WQBELs were derived from the CTR, the CTR is the applicable standard pursuant to 40 CFR 131.38. The scientific procedures for calculating the individual WQBELs for priority pollutants are based on the CTR-SIP, which was approved by USEPA on 18 May 2000. All beneficial uses and water quality objectives contained in the Basin Plan were approved under state law and submitted to and approved by USEPA prior to 30 May 2000. Any water quality objectives and beneficial uses submitted to USEPA prior to 30 May 2000, but not approved by USEPA before that date, are nonetheless "*applicable water quality standards for purposes of the [Clean Water] Act*" pursuant to 40 CFR 131.21(c)(1). Collectively, this Order's restrictions on individual pollutants are no more stringent than required to implement the technology-based requirements of the CWA and the applicable water quality standards for purposes of the CWA.

N. Antidegradation Policy. 40 CFR 131.12 requires that the state water quality standards include an antidegradation policy consistent with the federal policy. The State Water Board established California's antidegradation policy in State Water Board Resolution No. 68-16. Resolution No. 68-16 incorporates the federal antidegradation policy where the federal policy applies under federal law. Resolution No. 68-16 requires that existing quality of waters be maintained unless degradation is justified based on specific findings. The Central Valley Water Board's Basin Plan implements, and incorporates by reference, both the state and federal antidegradation policies. As discussed in detail in the Fact Sheet, the permitted discharge is consistent with the antidegradation provision of 40 CFR 131.12 and Resolution No. 68-16.

O. Anti-Backsliding Requirements. Sections 303(d)(4) and 402(o)(2) of the CWA and federal regulations at 40 CFR 122.44(l) prohibit backsliding in NPDES permits. These anti-backsliding provisions require effluent limitations in a reissued permit to be as stringent as those in the previous permit, with some exceptions. Some effluent

limitations in this Order are less stringent that those in Order R5-2007-0133-01. As discussed in detail in the Fact Sheet, this relaxation of effluent limitations is consistent with the anti-backsliding requirements of the CWA and federal regulations.

P. Endangered Species Act. This Order does not authorize any act that results in the taking of a threatened or endangered species or any act that is now prohibited, or becomes prohibited in the future, under either the California Endangered Species Act (Fish and Game Code sections 2050 to 2097) or the Federal Endangered Species Act (16 U.S.C.A. sections 1531 to 1544). This Order requires compliance with effluent limits, receiving water limits, and other requirements to protect the beneficial uses of waters of the state. The Discharger is responsible for meeting all requirements of the applicable Endangered Species Act.

Q. Monitoring and Reporting. 40 CFR 122.48 requires that all NPDES permits specify requirements for recording and reporting monitoring results. Water Code sections 13267 and 13383 authorize the Central Valley Water Board to require technical and monitoring reports. The Monitoring and Reporting Program establishes monitoring and reporting requirements to implement federal and State requirements. The Monitoring and Reporting Program is provided in Attachment E.

The technical and monitoring reports in this Order are required in accordance with Water Code section 13267, which states the following in subsection (b)(1), "*In conducting an investigation specified in subdivision (a), the regional board may require that any person who has discharged, discharges, or is suspected of having discharged or discharging, or who proposes to discharge waste within its region, or any citizen or domiciliary, or political agency or entity of this state who has discharged, discharges, or is suspected of having discharged or discharging, or who proposes to discharge, waste outside of its region that could affect the quality of waters within its region shall furnish, under penalty of perjury, technical or monitoring program reports which the regional board requires. The burden, including costs, of these reports shall bear a reasonable relationship to the need for the report and the benefits to be obtained from the reports. In requiring those reports, the regional board shall provide the person with a written explanation with regard to the need for the reports, and shall identify the evidence that supports requiring that person to provide the reports*."

The Discharger owns and operates the Facility subject to this Order. The monitoring reports required by this Order are necessary to determine compliance with this Order. The need for the monitoring reports is discussed in the Fact Sheet.

R. Standard and Special Provisions. Standard Provisions, which apply to all NPDES permits in accordance with 40 CFR 122.41, and additional conditions applicable to specified categories of permits in accordance with 40 CFR 122.42, are provided in Attachment D. The discharger must comply with all standard provisions and with those additional conditions that are applicable under 40 CFR 122.42. The Central Valley Water Board has also included in this Order special provisions applicable to the Discharger. Some special provisions require submittal of technical reports. All technical reports are required in accordance with Water Code section 13267. The

rationale for the special provisions and need for technical reports required in this Order is provided in the Fact Sheet.

S. Provisions and Requirements Implementing State Law. The provisions/requirements in section VI.A.2.o of this Order are included to implement State law only. These provisions/requirements are not required or authorized under the federal CWA; consequently, violations of these provisions/requirements are not subject to the enforcement remedies that are available for NPDES violations.

T. Notification of Interested Parties. The Central Valley Water Board has notified the Discharger and interested agencies and persons of its intent to prescribe WDRs for the discharge and has provided them with an opportunity to submit their written comments and recommendations. Details of notification are provided in the Fact Sheet of this Order.

U. Consideration of Public Comment. The Central Valley Water Board, in a public meeting, heard and considered all comments pertaining to the discharge. Details of the Public Hearing are provided in the Fact Sheet.

THEREFORE, IT IS HEREBY ORDERED, that Order R5-2007-0133-01 is rescinded upon the effective date of this Order except for enforcement purposes, and, in order to meet the provisions contained in division 7 of the Water Code (commencing with section 13000) and regulations adopted thereunder, and the provisions of the federal CWA and regulations and guidelines adopted thereunder, the Discharger shall comply with the requirements in this Order.

III. DISCHARGE PROHIBITIONS

A. Discharge of wastewater at a location or in a manner different from that described in the Findings is prohibited.

B. The by-pass or overflow of wastes to surface waters is prohibited, except as allowed by Federal Standard Provisions I.G. and I.H. (Attachment D).

C. Neither the discharge nor its treatment shall create a nuisance as defined in section 13050 of the Water Code.

D. The Discharger shall not allow pollutant-free wastewater to be discharged into the treatment, or disposal, system in amounts that significantly diminish the system's capability to comply with this Order. Pollutant-free wastewater means rainfall, groundwater, cooling waters, and condensates that are essentially free of pollutants.

E. Effective immediately, the Discharger is prohibited from discharging wastewater into Jackson Creek in amounts that cause the downstream Lake Amador water to exceed greater than five percent volume of wastewater in Lake Amador (one part wastewater in 20 parts of lake water, or 20:1 dilution).

IV. EFFLUENT LIMITATIONS AND DISCHARGE SPECIFICATIONS

A. Effluent Limitations – Discharge Point No. 001

1. Final Effluent Limitations – Discharge Point No. 001

a. The Discharger shall maintain compliance with the following effluent limitations at Discharge Point No. 001, with compliance measured at Monitoring Location EFF-001 as described in the Monitoring and Reporting Program:

Table 6. Effluent Limitations

Parameter	Units	Effluent Limitations				
		Average Monthly	Average Weekly	Maximum Daily	Instantaneous Minimum	Instantaneous Maximum
Conventional Pollutants						
Biochemical Oxygen Demand (5-day @ 20°C)	mg/L	10	15	20	--	--
	lbs/day[1]	60	90	120	--	--
pH	standard units	--	--	--	6.5	8.0
Total Suspended Solids	mg/L	10	15	20	--	--
	lbs/day[1]	60	90	120	--	--
Priority Pollutants						
Chlorodibromomethane	µg/L	0.41	--	0.82	--	--
Cyanide, Total (as CN)	µg/L	4.2	--	8.8	--	--
Dichlorobromomethane	µg/L	0.56	--	1.4	--	--
Non-Conventional Pollutants						
Ammonia Nitrogen, Total (as N)	mg/L	2.3	--	5.5	--	--
	lbs/day[1]	14	--	33	--	--
Nitrate Plus Nitrite (as N)	mg/L	10	--	--	--	--
Total Trihalomethanes[2]	µg/L	80	--	--	--	--

[1] Based upon an average dry weather flow of 0.71 MGD.
[2] Applies to the sum of bromoform, chlorodibromomethane, chloroform, and dichlorobromomethane.

b. Percent Removal. The average monthly percent removal of BOD_5 and TSS shall not be less than 85 percent.

c. Acute Whole Effluent Toxicity. Survival of aquatic organisms in 96-hour bioassays of undiluted waste shall be no less than:

i. 70%, minimum for any one bioassay; and
ii. 90%, median for any three consecutive bioassays.

d. Total Residual Chlorine. Effluent total residual chlorine shall not exceed:

i. 0.011 mg/L, as a 4-day average; and
ii. 0.019 mg/L, as a 1-hour average.

e. Total Coliform Organisms. Effluent total coliform organisms shall not exceed:

i. 2.2 most probable number (MPN) per 100 mL, as a 7-day median;
ii. 23 MPN/100 mL, more than once in any 30-day period; and
iii. 240 MPN/100 mL, at any time.

f. Average Dry Weather Flow. The average dry weather discharge flow shall not exceed 0.71 MGD.

g. Mercury, Total Recoverable. The total monthly mass discharge of total mercury shall not exceed 0.0016 lbs/month.

2. Interim Effluent Limitations – Not Applicable

B. Land Discharge Specifications – Not Applicable

C. Reclamation Specifications – Not Applicable

V. RECEIVING WATER LIMITATIONS

A. Surface Water Limitations

Receiving water limitations are based on water quality objectives contained in the Basin Plan and are a required part of this Order. Compliance determination for surface water limitations is to be measured or observed at RSW-002, except as specified for individual constituents below (temperature and turbidity). The discharge shall not cause the following in Jackson Creek:

1. Bacteria. The fecal coliform concentration, based on a minimum of not less than five samples for any 30-day period, to exceed a geometric mean of 200 MPN/100 mL, nor more than 10 percent of the total number of fecal coliform samples taken during any 30-day period to exceed 400 MPN/100 mL.

2. Biostimulatory Substances. Water to contain biostimulatory substances which promote aquatic growths in concentrations that cause nuisance or adversely affect beneficial uses.

3. Chemical Constituents. Chemical constituents to be present in concentrations that adversely affect beneficial uses.

4. Color. Discoloration that causes nuisance or adversely affects beneficial uses.

5. Dissolved Oxygen:

a. The monthly median of the mean daily dissolved oxygen concentration to fall below 85 percent of saturation in the main water mass;

b. The 95 percentile dissolved oxygen concentration to fall below 75 percent of saturation; nor

c. The dissolved oxygen concentration to be reduced below 7.0 mg/L at any time.

6. **Floating Material.** Floating material to be present in amounts that cause nuisance or adversely affect beneficial uses.

7. **Oil and Grease.** Oils, greases, waxes, or other materials to be present in concentrations that cause nuisance, result in a visible film or coating on the surface of the water or on objects in the water, or otherwise adversely affect beneficial uses.

8. **pH.** The pH to be depressed below 6.5 nor raised above 8.5.

9. **Pesticides:**

   a. Pesticides to be present, individually or in combination, in concentrations that adversely affect beneficial uses;

   b. Pesticides to be present in bottom sediments or aquatic life in concentrations that adversely affect beneficial uses;

   c. Total identifiable persistent chlorinated hydrocarbon pesticides to be present in the water column at concentrations detectable within the accuracy of analytical methods approved by USEPA or the Executive Officer;

   d. Pesticide concentrations to exceed those allowable by applicable antidegradation policies (see State Water Board Resolution No. 68-16 and 40 CFR 131.12.);

   e. Pesticide concentrations to exceed the lowest levels technically and economically achievable;

   f. Pesticides to be present in concentration in excess of the maximum contaminant levels (MCLs) set forth in CCR, Title 22, division 4, chapter 15; nor

   g. Thiobencarb to be present in excess of 1.0 µg/L.

10. **Radioactivity:**

   a. Radionuclides to be present in concentrations that are harmful to human, plant, animal, or aquatic life nor that result in the accumulation of radionuclides in the food web to an extent that presents a hazard to human, plant, animal, or aquatic life.

   b. Radionuclides to be present in excess of the MCLs specified in Table 64442 of section 64442 and Table 64443 of section 64443 of Title 22 of the California Code of Regulations.

11. **Suspended Sediments.** The suspended sediment load and suspended sediment discharge rate of surface waters to be altered in such a manner as to cause nuisance or adversely affect beneficial uses.

12. **Settleable Substances.** Substances to be present in concentrations that result in the deposition of material that causes nuisance or adversely affects beneficial uses.

13. **Suspended Material.** Suspended material to be present in concentrations that cause nuisance or adversely affect beneficial uses.

14. **Taste and Odors.** Taste- or odor-producing substances to be present in concentrations that impart undesirable tastes or odors to fish flesh or other edible products of aquatic origin, or that cause nuisance, or otherwise adversely affect beneficial uses.

15. **Temperature.** The natural temperature to be increased by more than 5°F. Compliance to be determined based on the difference in temperature at Monitoring Locations RSW-001 and RSW-002.

16. **Toxicity.** Toxic substances to be present, individually or in combination, in concentrations that produce detrimental physiological responses in human, plant, animal, or aquatic life.

17. **Turbidity.** Compliance to be determined based on the difference in turbidity at Monitoring Locations RSW-001 and RSW-002.

    a. Shall not exceed 2 Nephelometric Turbidity Units (NTU) where natural turbidity is less than 1 NTU;

    b. Shall not increase more than 1 NTU where natural turbidity is between 1 and 5 NTUs (When wastewater is treated to a tertiary level, including coagulation, a one-month averaging period may be used when determining compliance);

    c. Shall not increase more than 20 percent where natural turbidity is between 5 and 50 NTUs;

    d. Shall not increase more than 10 NTU where natural turbidity is between 50 and 100 NTUs; nor

    e. Shall not increase more than 10 percent where natural turbidity is greater than 100 NTUs.

B. Groundwater Limitations – Not Applicable

VI. PROVISIONS

A. Standard Provisions

1. The Discharger shall comply with all Standard Provisions (federal NPDES standard conditions from 40 CFR Part 122) included in Attachment D of this Order.

2. The Discharger shall comply with the following provisions:

a. If the Discharger's wastewater treatment plant is publicly owned or subject to regulation by California Public Utilities Commission, it shall be supervised and operated by persons possessing certificates of appropriate grade according to Title 23, CCR, division 3, chapter 26.

b. After notice and opportunity for a hearing, this Order may be terminated or modified for cause, including, but not limited to:

i. violation of any term or condition contained in this Order;

ii. obtaining this Order by misrepresentation or by failing to disclose fully all relevant facts;

iii. a change in any condition that requires either a temporary or permanent reduction or elimination of the authorized discharge; and

iv. a material change in the character, location, or volume of discharge.

The causes for modification include:

- *New regulations.* New regulations have been promulgated under section 405(d) of the CWA, or the standards or regulations on which the permit was based have been changed by promulgation of amended standards or regulations or by judicial decision after the permit was issued.

- *Land application plans.* When required by a permit condition to incorporate a land application plan for beneficial reuse of sewage sludge, to revise an existing land application plan, or to add a land application plan.

- *Change in sludge use or disposal practice.* Under 40 CFR 122.62(a)(1), a change in the Discharger's sludge use or disposal practice is a cause for modification of the permit. It is cause for revocation and reissuance if the Discharger requests or agrees.

The Central Valley Water Board may review and revise this Order at any time upon application of any affected person or the Central Valley Water Board's own motion.

c. If a toxic effluent standard or prohibition (including any scheduled compliance specified in such effluent standard or prohibition) is established under section 307(a) of the CWA, or amendments thereto, for a toxic pollutant that is present in the discharge authorized herein, and such standard or prohibition is more stringent than any limitation upon such pollutant in this Order, the Central Valley Water Board will revise or modify this Order in accordance with such toxic effluent standard or prohibition.

The Discharger shall comply with effluent standards and prohibitions within the

time provided in the regulations that establish those standards or prohibitions, even if this Order has not yet been modified.

d. This Order shall be modified, or alternately revoked and reissued, to comply with any applicable effluent standard or limitation issued or approved under sections 301(b)(2)(C) and (D), 304(b)(2), and 307(a)(2) of the CWA, if the effluent standard or limitation so issued or approved:

i. Contains different conditions or is otherwise more stringent than any effluent limitation in the Order; or

ii. Controls any pollutant limited in the Order.

The Order, as modified or reissued under this paragraph, shall also contain any other requirements of the CWA then applicable.

e. The provisions of this Order are severable. If any provision of this Order is found invalid, the remainder of this Order shall not be affected.

f. The Discharger shall take all reasonable steps to minimize any adverse effects to waters of the State or users of those waters resulting from any discharge or sludge use or disposal in violation of this Order. Reasonable steps shall include such accelerated or additional monitoring as necessary to determine the nature and impact of the non-complying discharge or sludge use or disposal.

g. The Discharger shall ensure compliance with any existing or future pretreatment standard promulgated by USEPA under section 307 of the CWA, or amendment thereto, for any discharge to the municipal system.

h. A copy of this Order shall be maintained at the discharge facility and be available at all times to operating personnel. Key operating personnel shall be familiar with its content.

i. Safeguard to electric power failure:

i. The Discharger shall provide safeguards to assure that, should there be reduction, loss, or failure of electric power, the discharge shall comply with the terms and conditions of this Order.

ii. Upon written request by the Central Valley Water Board, the Discharger shall submit a written description of safeguards. Such safeguards may include alternate power sources, standby generators, retention capacity, operating procedures, or other means. A description of the safeguards provided shall include an analysis of the frequency, duration, and impact of power failures experienced over the past 5 years on effluent quality and on the capability of the Discharger to comply with the terms and conditions of the Order. The adequacy of the safeguards is subject to the approval of the Central Valley Water Board.

iii. Should the treatment works not include safeguards against reduction, loss, or failure of electric power, or should the Central Valley Water Board not approve the existing safeguards, the Discharger shall, within 90 days of having been advised in writing by the Central Valley Water Board that the existing safeguards are inadequate, provide to the Central Valley Water Board and USEPA a schedule of compliance for providing safeguards such that in the event of reduction, loss, or failure of electric power, the Discharger shall comply with the terms and conditions of this Order. The schedule of compliance shall, upon approval of the Central Valley Water Board, become a condition of this Order.

j. The Discharger, upon written request of the Central Valley Water Board, shall file with the Board a technical report on its preventive (failsafe) and contingency (cleanup) plans for controlling accidental discharges, and for minimizing the effect of such events. This report may be combined with that required under the Central Valley Water Board Standard Provision contained in section VI.A.2.i of this Order.

The technical report shall:

i. Identify the possible sources of spills, leaks, untreated waste by-pass, and contaminated drainage. Loading and storage areas, power outage, waste treatment unit outage, and failure of process equipment, tanks and pipes should be considered.

ii. Evaluate the effectiveness of present facilities and procedures and state when they became operational.

iii. Predict the effectiveness of the proposed facilities and procedures and provide an implementation schedule containing interim and final dates when they will be constructed, implemented, or operational.

The Central Valley Water Board, after review of the technical report, may establish conditions which it deems necessary to control accidental discharges and to minimize the effects of such events. Such conditions shall be incorporated as part of this Order, upon notice to the Discharger.

k. A publicly owned treatment works whose waste flow has been increasing, or is projected to increase, shall estimate when flows will reach hydraulic and treatment capacities of its treatment and disposal facilities. The projections shall be made in January, based on the last 3 years' average dry weather flows, peak wet weather flows and total annual flows, as appropriate. When any projection shows that capacity of any part of the facilities may be exceeded in 4 years, the Discharger shall notify the Central Valley Water Board by 31 January. A copy of the notification shall be sent to appropriate local elected officials, local permitting agencies and the press. Within 120 days of the notification, the Discharger shall submit a technical report showing how it will prevent flow volumes from

exceeding capacity or how it will increase capacity to handle the larger flows. The Central Valley Water Board may extend the time for submitting the report.

l. The Discharger shall submit technical reports as directed by the Executive Officer. All technical reports required herein that involve planning, investigation, evaluation, or design, or other work requiring interpretation and proper application of engineering or geologic sciences, shall be prepared by or under the direction of persons registered to practice in California pursuant to California Business and Professions Code, sections 6735, 7835, and 7835.1. To demonstrate compliance with Title 16, CCR, sections 415 and 3065, all technical reports must contain a statement of the qualifications of the responsible registered professional(s). As required by these laws, completed technical reports must bear the signature(s) and seal(s) of the registered professional(s) in a manner such that all work can be clearly attributed to the professional responsible for the work.

m. The Central Valley Water Board is authorized to enforce the terms of this permit under several provisions of the Water Code, including, but not limited to, sections 13385, 13386, and 13387.

n. For publicly owned treatment works, prior to making any change in the point of discharge, place of use, or purpose of use of treated wastewater that results in a permanent decrease of flow in any portion of a watercourse, the Discharger must file a petition with the State Water Board, Division of Water Rights, and receive approval for such a change. (Water Code section 1211).

o. In the event the Discharger does not comply or will be unable to comply for any reason, with any prohibition, maximum daily effluent limitation, 1-hour average effluent limitation, or receiving water limitation contained in this Order, the Discharger shall notify the Central Valley Water Board by telephone (916) 464-3291 within 24 hours of having knowledge of such noncompliance, and shall confirm this notification in writing within 5 days, unless the Central Valley Water Board waives confirmation. The written notification shall include the information required by the Standard Provision contained in Attachment D section V.E.1. [40 CFR 122.41(l)(6)(i)].

p. Failure to comply with provisions or requirements of this Order, or violation of other applicable laws or regulations governing discharges from this facility, may subject the Discharger to administrative or civil liabilities, criminal penalties, and/or other enforcement remedies to ensure compliance. Additionally, certain violations may subject the Discharger to civil or criminal enforcement from appropriate local, state, or federal law enforcement entities.

q. In the event of any change in control or ownership of land or waste discharge facilities presently owned or controlled by the Discharger, the Discharger shall notify the succeeding owner or operator of the existence of this Order by letter, a copy of which shall be immediately forwarded to the Central Valley Water Board.

To assume operation under this Order, the succeeding owner or operator must apply in writing to the Executive Officer requesting transfer of the Order. The request must contain the requesting entity's full legal name, the state of incorporation if a corporation, address and telephone number of the persons responsible for contact with the Central Valley Water Board and a statement. The statement shall comply with the signatory and certification requirements in the federal Standard Provisions (Attachment D, section V.B) and state that the new owner or operator assumes full responsibility for compliance with this Order. Failure to submit the request shall be considered a discharge without requirements, a violation of the Water Code. Transfer shall be approved or disapproved in writing by the Executive Officer.

B. Monitoring and Reporting Program Requirements

The Discharger shall comply with the Monitoring and Reporting Program, and future revisions thereto, in Attachment E of this Order.

C. Special Provisions

1. Reopener Provisions

a. Conditions that necessitate a major modification of a permit are described in 40 CFR 122.62, including, but not limited to:

i. If new or amended applicable water quality standards are promulgated or approved pursuant to section 303 of the CWA, or amendments thereto, this permit may be reopened and modified in accordance with the new or amended standards.

ii. When new information, that was not available at the time of permit issuance, would have justified different permit conditions at the time of issuance.

b. This Order may be reopened for modification, or revocation and reissuance, as a result of the detection of a reportable priority pollutant generated by special conditions included in this Order. These special conditions may be, but are not limited to, fish tissue sampling, whole effluent toxicity, monitoring requirements on internal waste stream(s), and monitoring for surrogate parameters. Additional requirements may be included in this Order as a result of the special condition monitoring data.

c. Mercury. If mercury is found to be causing toxicity based on acute or chronic toxicity test results, or if a TMDL program is adopted, this Order shall be reopened and the mass effluent limitation modified (higher or lower) or an effluent concentration limitation imposed. If the Central Valley Water Board determines that a mercury offset program is feasible for Dischargers subject to a NPDES permit, then this Order may be reopened to reevaluate the mercury mass loading limitation(s) and the need for a mercury offset program for the Discharger.

d. **Whole Effluent Toxicity.** As a result of a Toxicity Reduction Evaluation (TRE), this Order may be reopened to include a chronic toxicity limitation, a new acute toxicity limitation, and/or a limitation for a specific toxicant identified in the TRE. Additionally, if the State Water Board revises the SIP's toxicity control provisions that would require the establishment of numeric chronic toxicity effluent limitations, this Order may be reopened to include a numeric chronic toxicity effluent limitation based on the new provisions.

e. **Drinking Water Policy.** On 26 July 2013, the Central Valley Water Board adopted Resolution No. R5-2013-0098 amending the Basin Plan and establishing a Drinking Water Policy. The State Water Board will consider adoption of the Drinking Water Policy at a future meeting. This Order may be reopened to incorporate monitoring of drinking water constituents to implement the Drinking Water Policy.

f. **20:1 Dilution in Lake Amador (Prohibition III.E)**. This prohibition is based on the State Water Board Division of Drinking Water's (DDW) recommendation that discharges from wastewater treatment plants to municipal water supplies maintain a minimum of 20:1 dilution to ensure the protection of the downstream domestic beneficial use of Jackson Creek and public health. Once DDW determines and provides written notification that the 20:1 dilution for the disinfected tertiary-level treated effluent discharge is no longer necessary, this Order may be reopened to remove Prohibition III.E (20:1 dilution prohibition in Lake Amador).

2. **Special Studies, Technical Reports and Additional Monitoring Requirements**

a. **Chronic Whole Effluent Toxicity.** For compliance with the Basin Plan's narrative toxicity objective, this Order requires the Discharger to conduct chronic whole effluent toxicity (WET) testing, as specified in the Monitoring and Reporting Program (Attachment E, section V). Furthermore, this Provision requires the Discharger to investigate the causes of, and identify corrective actions to reduce or eliminate effluent toxicity. If the discharge exhibits toxicity, as described in subsection ii below, the Discharger is required to initiate a TRE in accordance with an approved TRE Workplan, and take actions to mitigate the impact of the discharge and prevent recurrence of toxicity. A TRE is a site-specific study conducted in a stepwise process to identify the source(s) of toxicity and the effective control measures for effluent toxicity. TREs are designed to identify the causative agents and sources of effluent toxicity, evaluate the effectiveness of the toxicity control options, and confirm the reduction in effluent toxicity. This Provision includes requirements for the Discharger to develop and submit a TRE Workplan and includes procedures for accelerated chronic toxicity monitoring and TRE initiation.

i. **Initial Investigative TRE Workplan.** Within 90 days of the effective date of this Order, the Discharger shall submit to the Central Valley Water Board an Initial Investigative TRE Workplan for approval by the Executive Officer. This should be a one to two page document including, at a minimum:

(a) A description of the investigation and evaluation techniques that will be used to identify potential causes and sources of effluent toxicity, effluent variability, and treatment system efficiency;

(b) A description of the facility's methods of maximizing in-house treatment efficiency and good housekeeping practices, and a list of all chemicals used in operation of the facility; and

(c) A discussion of who will conduct the Toxicity Identification Evaluation (TIE), if necessary (e.g., an in-house expert or outside contractor).

ii. Accelerated Monitoring and TRE Initiation. When the numeric toxicity monitoring trigger is exceeded during regular chronic toxicity monitoring, the Discharger shall initiate accelerated monitoring as required in the Accelerated Monitoring Specifications. The Discharger shall initiate a TRE to address effluent toxicity if any WET testing results exceed the numeric toxicity monitoring trigger during accelerated monitoring.

iii. Numeric Toxicity Monitoring Trigger. The numeric toxicity monitoring trigger to initiate a TRE is > **1 TU_C** (where TU_C = 100/NOEC). The monitoring trigger is not an effluent limitation; it is the toxicity threshold at which the Discharger is required to begin accelerated monitoring and initiate a TRE when the effluent exhibits toxicity.

iv. Accelerated Monitoring Specifications. If the numeric toxicity monitoring trigger is exceeded during regular chronic toxicity testing, the Discharger shall initiate accelerated monitoring within 14 days of notification by the laboratory of the exceedance. Accelerated monitoring shall consist of four (4) chronic toxicity tests conducted once every 2 weeks using the species that exhibited toxicity. The following protocol shall be used for accelerated monitoring and TRE initiation:

(a) If the results of four (4) consecutive accelerated monitoring tests do not exceed the monitoring trigger, the Discharger may cease accelerated monitoring and resume regular chronic toxicity monitoring. However, notwithstanding the accelerated monitoring results, if there is evidence of effluent toxicity, the Executive Officer may require that the Discharger initiate a TRE.

(b) If the source(s) of the toxicity is easily identified (e.g., temporary plant upset), the Discharger shall make necessary corrections to the facility and shall continue accelerated monitoring until four (4) consecutive accelerated tests do not exceed the monitoring trigger. Upon confirmation that the effluent toxicity has been removed, the Discharger may cease accelerated monitoring and resume regular chronic toxicity monitoring.

(c) If the result of any accelerated toxicity test exceeds the monitoring trigger, the Discharger shall cease accelerated monitoring and begin a TRE to

investigate the cause(s) of, and identify corrective actions to reduce or eliminate effluent toxicity. Within thirty (30) days of notification by the laboratory of any test result exceeding the monitoring trigger during accelerated monitoring, the Discharger shall submit a TRE Action Plan to the Central Valley Water Board including, at minimum:

(1) Specific actions the Discharger will take to investigate and identify the cause(s) of toxicity, including a TRE WET monitoring schedule;

(2) Specific actions the Discharger will take to mitigate the impact of the discharge and prevent the recurrence of toxicity; and

(3) A schedule for these actions.

Within sixty (60) days of notification by the laboratory of the test results, the Discharger shall submit to the Central Valley Water Board a TRE Workplan for approval by the Executive Officer. The TRE Workplan shall outline the procedures for identifying the source(s) of, and reducing or eliminating effluent toxicity. The TRE Workplan must be developed in accordance with USEPA guidance[1].

3. Best Management Practices and Pollution Prevention

a. Salinity and Chemical Additives Evaluation and Minimization Plan. The Discharger shall update and continue to implement a salinity evaluation and minimization plan to identify and address sources of salinity from the Facility. The plan shall be updated and submitted to the Central Valley Water Board **by 6 September 2014**.

The Salinity and Chemical Additives Evaluation and Minimization Plan shall include an evaluation that identifies and quantifies chemical additives necessary for the proper operation and treatment of the Facility (e.g., calcium hydroxide for alkalinity control, polymer addition for filter performance). The Plan shall evaluate and propose feasible methods for reducing the amount of chemical additives that increase the salinity and other constituent concentrations or levels in the discharge, while still providing adequate treatment.

4. Construction, Operation and Maintenance Specifications

a. Turbidity. The Discharger shall operate the treatment system to ensure that turbidity prior to disinfection shall not exceed any of the following:

i. 2 NTU, as a daily average;
ii. 5 NTU, more than 5% of the time within a 24-hour period;
iii. 10 NTU, at any time.

[1] See the Fact Sheet (Attachment F, section VII.B.2.a.) for a list of USEPA guidance documents that must be considered in development of the TRE Workplan.

b. Ultraviolet (UV) Disinfection System Operating Specifications. The Discharger shall notify the Central Valley Water Board at least 30 days prior to start-up of the UV disinfection system. Once in operation, the Discharger shall operate the UV disinfection system to provide a minimum UV dose per channel of 100 millijoules per square centimeter (mJ/cm^2) at peak daily flow and shall maintain an adequate dose for disinfection while discharging to Jackson Creek, unless otherwise approved by the Executive Officer or the DDW. The Discharger shall meet the following specifications to provide virus inactivation equivalent to Title 22 Disinfected Tertiary Recycled Water:

i. The Discharger shall provide continuous, reliable monitoring of flow, UV transmittance, and turbidity.

ii. The Discharger shall operate the treatment system to insure that turbidity prior to disinfection shall not exceed 2 NTU as a daily average, and 5 NTU more than 5 percent of the time within a 24-hour period, and 10 NTU, at any time.

iii. The UV transmittance (at 254 nanometers) in the wastewater exiting the UV disinfection system shall not fall below 55 percent of maximum at any time.

iv. The quartz sleeves and cleaning system components must be visually inspected per the manufacturer's operations manual for physical wear (scoring, solarization, seal leaks, cleaning fluid levels, etc.) and to check the efficacy of the cleaning system.

v. The lamp sleeves must be cleaned periodically as necessary to meet the requirements.

vi. Lamps must be replaced per the manufacturer's operations manual, or sooner, if there are indications the lamps are failing to provide adequate disinfection. Lamp age and lamp replacement records must be maintained.

vii. The Facility must be operated in accordance with an operations and maintenance program that assures adequate disinfection.

5. Special Provisions for Municipal Facilities (POTWs Only)

a. Sludge/Biosolids Treatment or Discharge Specifications. Sludge in this document means the solid, semisolid, and liquid residues removed during primary, secondary, or advanced wastewater treatment processes. Solid waste refers to grit and screening material generated during preliminary treatment. Residual sludge means sludge that will not be subject to further treatment at the wastewater treatment plant. Biosolids refer to sludge that has been treated and tested and shown to be capable of being beneficially and legally used pursuant to federal and state regulations as a soil amendment for agricultural, silvicultural, horticultural, and land reclamation activities as specified under 40 CFR Part 503.

i. Collected screenings, residual sludge, biosolids, and other solids removed from liquid wastes shall be disposed of in a manner approved by the Executive Officer, and consistent with Consolidated Regulations for Treatment, Storage, Processing, or Disposal of Solid Waste, as set forth in Title 27, CCR, division 2, subdivision 1, section 20005, et seq. Removal for further treatment, storage, disposal, or reuse at sites (e.g., landfill, composting sites, soil amendment sites) that are operated in accordance with valid waste discharge requirements issued by a Regional Water Board will satisfy these specifications.

Sludge and solid waste shall be removed from screens, sumps, ponds, clarifiers, etc. as needed to ensure optimal plant performance.

The treatment of sludge generated at the Facility shall be confined to the Facility property and conducted in a manner that precludes infiltration of waste constituents into soils in a mass or concentration that will violate groundwater limitations in section V.B. of this Order. In addition, the storage of residual sludge, solid waste, and biosolids on Facility property shall be temporary and controlled, and contained in a manner that minimizes leachate formation and precludes infiltration of waste constituents into soils in a mass or concentration that will violate groundwater limitations included in section V.B. of this Order.

ii. The use, disposal, storage, and transportation of biosolids shall comply with existing federal and state laws and regulations, including permitting requirements and technical standards included in 40 CFR Part 503. If the State Water Board and the Central Valley Water Board are given the authority to implement regulations contained in 40 CFR Part 503, this Order may be reopened to incorporate appropriate time schedules and technical standards. The Discharger must comply with the standards and time schedules contained in 40 CFR Part 503 whether or not they have been incorporated into this Order.

iii. The Discharger shall comply with Section IX.A. Biosolids of the Monitoring and Reporting Program, Attachment E.

iv. Any proposed change in biosolids use or disposal practice from a previously approved practice shall be reported to the Executive Officer and USEPA Regional Administrator at least **90 days** in advance of the change.

v. **By 6 June 2014,** the Discharger shall review and update its existing biosolids use or disposal plan, and submit it to the Central Valley Water Board. The updated plan shall describe at a minimum:

(a) Sources and amounts of biosolids generated annually.

(b) Location(s) of on-site storage and description of the containment area.

(c) Plans for ultimate disposal. For landfill disposal, include the Central Valley Water Board's waste discharge requirement numbers that regulate the particular landfill; the present classification of the landfill; and the name and location of the landfill.

b. Collection System. On 2 May 2006, the State Water Board adopted State Water Board Order No. 2006-0003-DWQ, Statewide General WDRs for Sanitary Sewer Systems. The Discharger shall be subject to the requirements of Order No. 2006-0003-DWQ and any future revisions thereto. Order No. 2006-0003-DWQ requires that all public agencies that currently own or operate sanitary sewer systems apply for coverage under the general WDRs. The Discharger has applied for and has been approved for coverage under Order 2006-0003-DWQ for operation of its wastewater collection system.

6. Other Special Provisions

a. Wastewater shall be oxidized, coagulated, filtered, and adequately disinfected pursuant to the DDW reclamation criteria, CCR, Title 22, division 4, chapter 3, (Title 22), or equivalent. This Order does not include the requirements for unrestricted beneficial reuse contained in Chapter 3. For wastewater disposal, the Discharger is required to meet Title 22 tertiary numeric effluent quality (hence the use of "or equivalent"), but not the monitoring, alarm, process design, redundancy and storage requirements for beneficial reuse that is the full suite of Title 22 requirements.

7. Compliance Schedules – Not Applicable

VII. COMPLIANCE DETERMINATION

A. BOD_5 and TSS Effluent Limitations (Sections IV.A.1.a and IV.A.1.b). Compliance with the final effluent limitations for BOD_5 and TSS required in Limitations and Discharge Requirements section IV.A.1.a shall be ascertained by 24-hour composite samples. Compliance with effluent limitations required in Limitations and Discharge Requirements section IV.A.1.b for percent removal shall be calculated using the arithmetic mean of BOD_5 and TSS in effluent samples collected over a monthly period as a percentage of the arithmetic mean of the values for influent samples collected at approximately the same times during the same period.

B. Total Mercury Mass Loading Effluent Limitations (Section IV.A.1.g). The procedures for calculating mass loadings are as follows:

1. The total pollutant mass load for each individual calendar month shall be determined using an average of all concentration data collected that month and the corresponding total monthly flow. All effluent monitoring data collected under the monitoring and reporting program, pretreatment program, and any special studies shall be used for these calculations.

2. In calculating compliance, the Discharger shall count all non-detect measures at one-half of the detection level. If compliance with the effluent limitation is not attained due to the non-detect contribution, the Discharger shall improve and implement available analytical capabilities and compliance shall be evaluated with consideration of the detection limits.

C. **Average Dry Weather Flow Effluent Limitations (Section IV.A.1.f).** The average dry weather discharge flow represents the daily average flow when groundwater is at or near normal and runoff is not occurring. Compliance with the average dry weather flow effluent limitations will be determined annually based on the average daily flow over three consecutive dry weather months (e.g., July, August, and September).

D. **Total Coliform Organisms Effluent Limitations (Section IV.A.1.e).** For each day that an effluent sample is collected and analyzed for total coliform organisms, the 7-day median shall be determined by calculating the median concentration of total coliform bacteria in the effluent utilizing the bacteriological results of the last 7 days. For example, if a sample is collected on a Wednesday, the result from that sampling event and all results from the previous 6 days (i.e., Tuesday, Monday, Sunday, Saturday, Friday, and Thursday) are used to calculate the 7-day median. If the 7-day median of total coliform organisms exceeds a most probable number (MPN) of 2.2 per 100 milliliters, the Discharger will be considered out of compliance.

E. **Total Residual Chlorine Effluent Limitations (Section IV.A.1.d).** Continuous monitoring analyzers for chlorine residual or for dechlorination agent residual in the effluent are appropriate methods for compliance determination. A positive residual dechlorination agent in the effluent indicates that chlorine is not present in the discharge, which demonstrates compliance with the effluent limitations. This type of monitoring can also be used to prove that some chlorine residual exceedances are false positives. Continuous monitoring data showing either a positive dechlorination agent residual or a chlorine residual at or below the prescribed limit are sufficient to show compliance with the total residual chlorine effluent limitations, as long as the instruments are maintained and calibrated in accordance with the manufacturer's recommendations.

Any excursion above the 1-hour average or 4-day average total residual chlorine effluent limitations is a violation. If the Discharger conducts continuous monitoring and the Discharger can demonstrate, through data collected from a back-up monitoring system, that a chlorine spike recorded by the continuous monitor was not actually due to chlorine, then any excursion resulting from the recorded spike will not be considered an exceedance, but rather reported as a false positive. Records supporting validation of false positives shall be maintained in accordance with Section IV Standard Provisions (Attachment D).

F. **20:1 Dilution of Wastewater in Lake Amador (Section III.E.).** Compliance with Prohibition III.E will be determined in December of each year from the harmonic mean of annual inflows into Lake Amador, excluding effluent discharged to Jackson Creek, and using the current year's average dry weather flow (ADWF) discharged to Jackson Creek to estimate the percentage effluent in Lake Amador. The annual inflows into

Lake Amador, excluding effluent discharged to Jackson Creek, will be comprised of upstream Jackson Creek flow, estimated runoff into Lake Amador, rainfall into Lake Amador, and Lake Pardee water transferred into Lake Amador. The harmonic mean, which is the lowest estimate of the central tendency of a dataset, has been chosen to conservatively estimate dilution in Lake Amador.

G. Mass Effluent Limitations. The mass effluent limitations contained in the Final Effluent Limitations IV.A.1.a are based on the permitted average dry weather flow and calculated as follows:

Mass (lbs/day) = Flow (MGD) x Concentration (mg/L) x 8.34 (conversion factor)

If the effluent flow exceeds the permitted average dry weather flow during wet-weather seasons, the effluent mass limitations contained in Final Effluent Limitations IV.A.1.a shall not apply. If the effluent flow is below the permitted average dry weather flow during wet-weather seasons, the effluent mass limitations do apply.

H. Priority Pollutant Effluent Limitations. Compliance with effluent limitations for priority pollutants shall be determined in accordance with Section 2.4.5 of the SIP, as follows:

1. Dischargers shall be deemed out of compliance with an effluent limitation, if the concentration of the priority pollutant in the monitoring sample is greater than the effluent limitation and greater than or equal to the reporting level (RL).

2. Dischargers shall be required to conduct a Pollutant Minimization Program (PMP) in accordance with section 2.4.5.1 of the SIP when there is evidence that the priority pollutant is present in the effluent above an effluent limitation and either:

a. A sample result is reported as detected, but not quantified (DNQ) and the effluent limitation is less than the RL; or

b. A sample result is reported as non-detect (ND) and the effluent limitation is less than the method detection limit (MDL).

3. When determining compliance with an average monthly effluent limitation (AMEL) and more than one sample result is available in a month, the discharger shall compute the arithmetic mean unless the data set contains one or more reported determinations of DNQ or ND. In those cases, the discharger shall compute the median in place of the arithmetic mean in accordance with the following procedure:

a. The data set shall be ranked from low to high, reported ND determinations lowest, DNQ determinations next, followed by quantified values (if any). The order of the individual ND or DNQ determinations is unimportant.

b. The median value of the data set shall be determined. If the data set has an odd number of data points, then the median is the middle value. If the data set has an even number of data points, then the median is the average of the two values around the middle unless one or both of the points are ND or DNQ, in which case

the median value shall be the lower of the two data points where DNQ is lower than a value and ND is lower than DNQ.

4. If a sample result, or the arithmetic mean or median of multiple sample results, is below the RL, and there is evidence that the priority pollutant is present in the effluent above an effluent limitation and the discharger conducts a PMP (as described in section 2.4.5.1), the discharger shall not be deemed out of compliance.

I. Receiving Water Dissolved Oxygen. If monitoring point RSW-002 meets the receiving water limits, then the Discharger is in compliance. However, if monitoring point RSW-002 does not meet the limits, then staff will review the data for monitoring point RSW-001. If RSW-001 is in compliance, then it can be concluded that the discharge of wastewater caused an exceedence of the receiving water limits and the Discharger will be considered in violation.

J. Reporting Due Dates. Reporting requirements shall be in accordance with due dates specified in this Order. If the due date is on a Saturday, Sunday, State holiday, or a day the corresponding Water Board(s) office(s) is(are) closed, the due date shall be on the next business day.

ATTACHMENT A – DEFINITIONS

Arithmetic Mean (m)
Also called the average, is the sum of measured values divided by the number of samples. For ambient water concentrations, the arithmetic mean is calculated as follows:

Arithmetic mean = m= Sx / n where: Sx is the sum of the measured ambient water concentrations, and n is the number of samples.

Average Monthly Effluent Limitation (AMEL)
The highest allowable average of daily discharges over a calendar month, calculated as the sum of all daily discharges measured during a calendar month divided by the number of daily discharges measured during that month.

Average Weekly Effluent Limitation (AWEL)
The highest allowable average of daily discharges over a calendar week (Sunday through Saturday), calculated as the sum of all daily discharges measured during a calendar week divided by the number of daily discharges measured during that week.

Bioaccumulative
Those substances taken up by an organism from its surrounding medium through gill membranes, epithelial tissue, or from food and subsequently concentrated and retained in the body of the organism.

Carcinogenic
Pollutants are substances that are known to cause cancer in living organisms.

Coefficient of Variation (CV)
CV is a measure of the data variability and is calculated as the estimated standard deviation divided by the arithmetic mean of the observed values.

Daily Discharge
Daily Discharge is defined as either: (1) the total mass of the constituent discharged over the calendar day (12:00 am through 11:59 pm) or any 24-hour period that reasonably represents a calendar day for purposes of sampling (as specified in the permit), for a constituent with limitations expressed in units of mass or; (2) the unweighted arithmetic mean measurement of the constituent over the day for a constituent with limitations expressed in other units of measurement (e.g., concentration).

The daily discharge may be determined by the analytical results of a composite sample taken over the course of 1 day (a calendar day or other 24-hour period defined as a day) or by the arithmetic mean of analytical results from one or more grab samples taken over the course of the day.

For composite sampling, if 1 day is defined as a 24-hour period other than a calendar day, the analytical result for the 24-hour period will be considered as the result for the calendar day in which the 24-hour period ends.

Detected, but Not Quantified (DNQ)
DNQ are those sample results less than the RL, but greater than or equal to the laboratory's MDL. Sample results reported as DNQ are estimated concentrations.

Dilution Credit
Dilution Credit is the amount of dilution granted to a discharge in the calculation of a water quality-based effluent limitation, based on the allowance of a specified mixing zone. It is calculated from the dilution ratio or determined through conducting a mixing zone study or modeling of the discharge and receiving water.

Effluent Concentration Allowance (ECA)
ECA is a value derived from the water quality criterion/objective, dilution credit, and ambient background concentration that is used, in conjunction with the coefficient of variation for the effluent monitoring data, to calculate a long-term average (LTA) discharge concentration. The ECA has the same meaning as waste load allocation (WLA) as used in USEPA guidance (Technical Support Document For Water Quality-based Toxics Control, March 1991, second printing, EPA/505/2-90-001).

Enclosed Bays
Enclosed Bays means indentations along the coast that enclose an area of oceanic water within distinct headlands or harbor works. Enclosed bays include all bays where the narrowest distance between the headlands or outermost harbor works is less than 75 percent of the greatest dimension of the enclosed portion of the bay. Enclosed bays include, but are not limited to, Humboldt Bay, Bodega Harbor, Tomales Bay, Drake's Estero, San Francisco Bay, Morro Bay, Los Angeles-Long Beach Harbor, Upper and Lower Newport Bay, Mission Bay, and San Diego Bay. Enclosed bays do not include inland surface waters or ocean waters.

Estimated Chemical Concentration
The estimated chemical concentration that results from the confirmed detection of the substance by the analytical method below the ML value.

Estuaries
Estuaries means waters, including coastal lagoons, located at the mouths of streams that serve as areas of mixing for fresh and ocean waters. Coastal lagoons and mouths of streams that are temporarily separated from the ocean by sandbars shall be considered estuaries. Estuarine waters shall be considered to extend from a bay or the open ocean to a point upstream where there is no significant mixing of fresh water and seawater. Estuarine waters included, but are not limited to, the Sacramento-San Joaquin Delta, as defined in Water Code section 12220, Suisun Bay, Carquinez Strait downstream to the Carquinez Bridge, and appropriate areas of the Smith, Mad, Eel, Noyo, Russian, Klamath, San Diego, and Otay rivers. Estuaries do not include inland surface waters or ocean waters.

Inland Surface Waters
All surface waters of the State that do not include the ocean, enclosed bays, or estuaries.

Instantaneous Maximum Effluent Limitation
The highest allowable value for any single grab sample or aliquot (i.e., each grab sample or aliquot is independently compared to the instantaneous maximum limitation).

Instantaneous Minimum Effluent Limitation
The lowest allowable value for any single grab sample or aliquot (i.e., each grab sample or aliquot is independently compared to the instantaneous minimum limitation).

Maximum Daily Effluent Limitation (MDEL)
The highest allowable daily discharge of a pollutant, over a calendar day (or 24-hour period). For pollutants with limitations expressed in units of mass, the daily discharge is calculated as the total mass of the pollutant discharged over the day. For pollutants with limitations expressed in other units of measurement, the daily discharge is calculated as the arithmetic mean measurement of the pollutant over the day.

Median
The middle measurement in a set of data. The median of a set of data is found by first arranging the measurements in order of magnitude (either increasing or decreasing order). If the number of measurements (*n*) is odd, then the median = $X_{(n+1)/2}$. If *n* is even, then the median = $(X_{n/2} + X_{(n/2)+1})/2$ (i.e., the midpoint between the *n*/2 and *n*/2+1).

Method Detection Limit (MDL)
MDL is the minimum concentration of a substance that can be measured and reported with 99 percent confidence that the analyte concentration is greater than zero, as defined in 40 CFR Part 136, Attachment B, revised as of 3 July 1999.

Minimum Level (ML)
ML is the concentration at which the entire analytical system must give a recognizable signal and acceptable calibration point. The ML is the concentration in a sample that is equivalent to the concentration of the lowest calibration standard analyzed by a specific analytical procedure, assuming that all the method specified sample weights, volumes, and processing steps have been followed.

Mixing Zone
Mixing Zone is a limited volume of receiving water that is allocated for mixing with a wastewater discharge where water quality criteria can be exceeded without causing adverse effects to the overall water body.

Not Detected (ND)
Sample results which are less than the laboratory's MDL.

Ocean Waters
The territorial marine waters of the State as defined by California law to the extent these waters are outside of enclosed bays, estuaries, and coastal lagoons. Discharges to ocean waters are regulated in accordance with the State Water Board's California Ocean Plan.

Persistent Pollutants
Persistent pollutants are substances for which degradation or decomposition in the environment is nonexistent or very slow.

Pollutant Minimization Program (PMP)
PMP means waste minimization and pollution prevention actions that include, but are not limited to, product substitution, waste stream recycling, alternative waste management methods, and education of the public and businesses. The goal of the PMP shall be to reduce all potential sources of a priority pollutant(s) through pollutant minimization (control) strategies, including pollution prevention measures as appropriate, to maintain the effluent concentration at or below the water quality-based effluent limitation. Pollution prevention measures may be particularly appropriate for persistent bioaccumulative priority pollutants where there is evidence that beneficial uses are being impacted. The Central Valley Water Board may consider cost effectiveness when establishing the requirements of a PMP. The completion and implementation of a Pollution Prevention Plan, if required pursuant to Water Code section 13263.3(d), shall be considered to fulfill the PMP requirements.

Pollution Prevention
Pollution Prevention means any action that causes a net reduction in the use or generation of a hazardous substance or other pollutant that is discharged into water and includes, but is not limited to, input change, operational improvement, production process change, and product reformulation (as defined in Water Code section 13263.3). Pollution prevention does not include actions that merely shift a pollutant in wastewater from one environmental medium to another environmental medium, unless clear environmental benefits of such an approach are identified to the satisfaction of the State Water Resources Control Board (State Water Board) or Central Valley Water Board.

Satellite Collection System
The portion, if any, of a sanitary sewer system owned or operated by a different public agency than the agency that owns and operates the wastewater treatment facility that a sanitary sewer system is tributary to.

Source of Drinking Water
Any water designated as municipal or domestic supply (MUN) in a Regional Water Board Basin Plan.

Standard Deviation (s)
Standard Deviation is a measure of variability that is calculated as follows:

$$s = (\text{å}[(x - m)^2]/(n - 1))^{0.5}$$

where:
x is the observed value;
m is the arithmetic mean of the observed values; and
n is the number of samples.

Toxicity Reduction Evaluation (TRE)
TRE is a study conducted in a step-wise process designed to identify the causative agents of effluent or ambient toxicity, isolate the sources of toxicity, evaluate the effectiveness of toxicity control options, and then confirm the reduction in toxicity. The first steps of the TRE consist of the collection of data relevant to the toxicity, including additional toxicity testing, and an evaluation of facility operations and maintenance practices, and best management practices. A Toxicity Identification Evaluation (TIE) may be required as part of the TRE, if appropriate. (A

TIE is a set of procedures to identify the specific chemical(s) responsible for toxicity. These procedures are performed in three phases (characterization, identification, and confirmation) using aquatic organism toxicity tests.)

ATTACHMENT B – MAPS

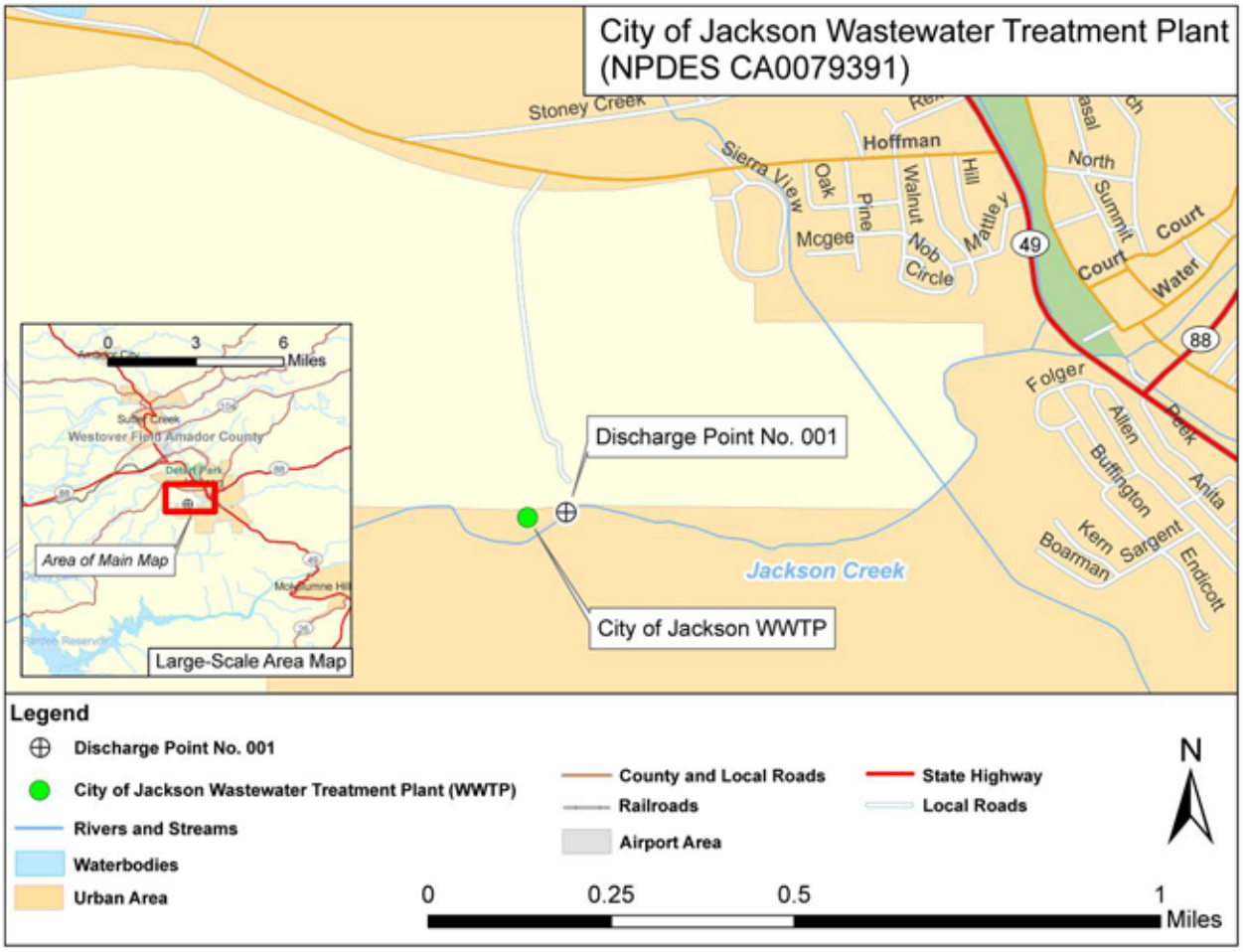

SITE LOCATION MAP

CITY OF JACKSON
WASTEWATER TREATMENT PLANT
AMADOR COUNTY

ATTACHMENT C – FLOW SCHEMATIC

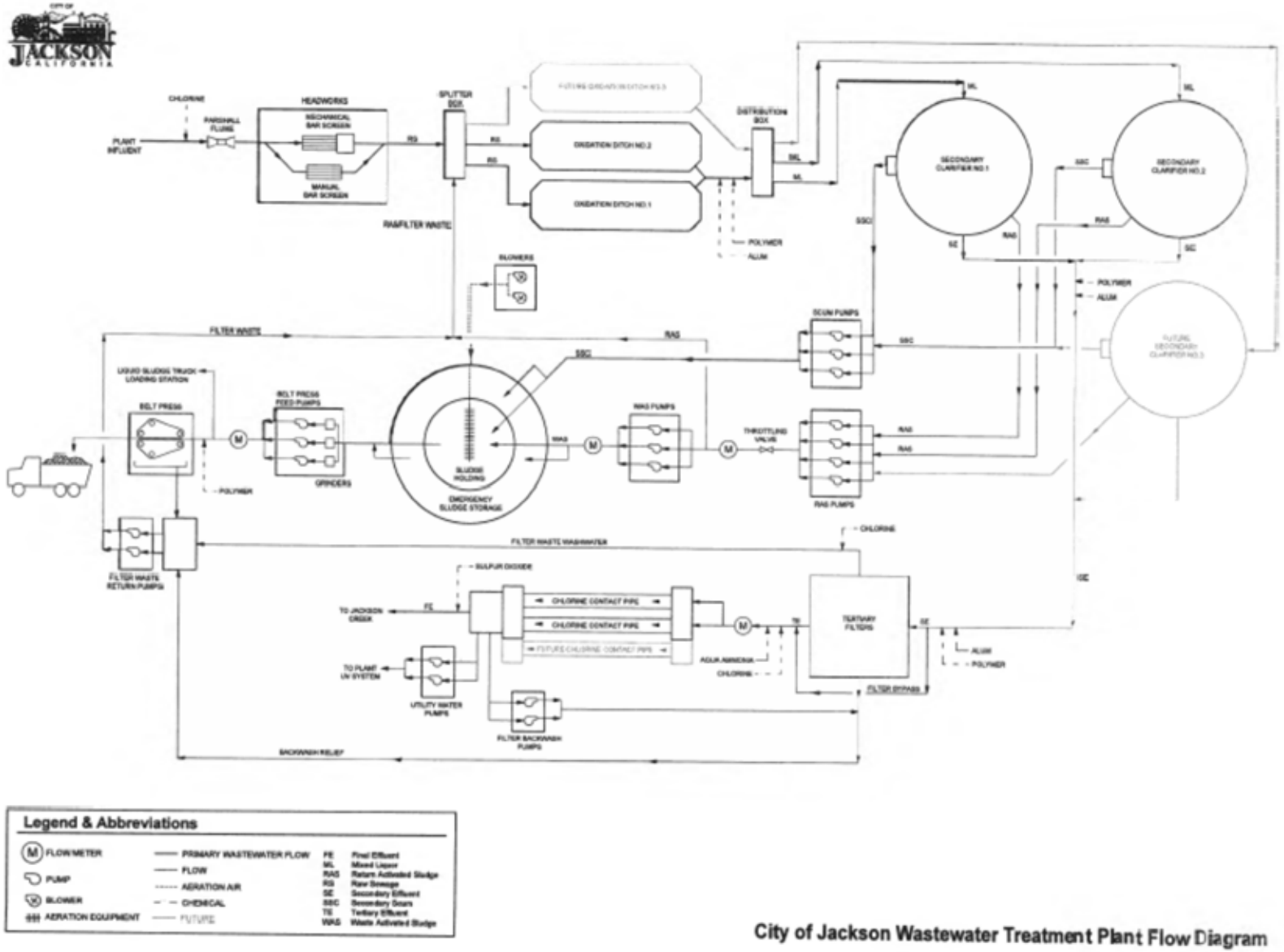

City of Jackson Wastewater Treatment Plant Flow Diagram

ATTACHMENT D – STANDARD PROVISIONS

I. STANDARD PROVISIONS – PERMIT COMPLIANCE

A. Duty to Comply

1. The Discharger must comply with all of the conditions of this Order. Any noncompliance constitutes a violation of the Clean Water Act (CWA) and the California Water Code (Water Code) and is grounds for enforcement action, for permit termination, revocation and reissuance, or modification; or denial of a permit renewal application. (40 CFR 122.41(a).)

2. The Discharger shall comply with effluent standards or prohibitions established under section 307(a) of the CWA for toxic pollutants and with standards for sewage sludge use or disposal established under section 405(d) of the CWA within the time provided in the regulations that establish these standards or prohibitions, even if this Order has not yet been modified to incorporate the requirement. (40 CFR 122.41(a)(1).)

B. Need to Halt or Reduce Activity Not a Defense

It shall not be a defense for a Discharger in an enforcement action that it would have been necessary to halt or reduce the permitted activity in order to maintain compliance with the conditions of this Order. (40 CFR 122.41(c))

C. Duty to Mitigate

The Discharger shall take all reasonable steps to minimize or prevent any discharge or sludge use or disposal in violation of this Order that has a reasonable likelihood of adversely affecting human health or the environment. (40 CFR 122.41(d))

D. Proper Operation and Maintenance

The Discharger shall at all times properly operate and maintain all facilities and systems of treatment and control (and related appurtenances) which are installed or used by the Discharger to achieve compliance with the conditions of this Order. Proper operation and maintenance also includes adequate laboratory controls and appropriate quality assurance procedures. This provision requires the operation of backup or auxiliary facilities or similar systems that are installed by a Discharger only when necessary to achieve compliance with the conditions of this Order. (40 CFR 122.41(e).)

E. Property Rights

1. This Order does not convey any property rights of any sort or any exclusive privileges. (40 CFR 122.41(g))

2. The issuance of this Order does not authorize any injury to persons or property or invasion of other private rights, or any infringement of state or local law or regulations. (40 CFR 122.5(c))

F. Inspection and Entry

The Discharger shall allow the Regional Water Board, State Water Board, United States Environmental Protection Agency (USEPA), and/or their authorized representatives (including an authorized contractor acting as their representative), upon the presentation of credentials and other documents, as may be required by law, to (40 CFR 122.41(i); Water Code section 13383):

1. Enter upon the Discharger's premises where a regulated facility or activity is located or conducted, or where records are kept under the conditions of this Order (40 CFR 122.41(i)(1));

2. Have access to and copy, at reasonable times, any records that must be kept under the conditions of this Order (40 CFR 122.41(i)(2));

3. Inspect and photograph, at reasonable times, any facilities, equipment (including monitoring and control equipment), practices, or operations regulated or required under this Order (40 CFR 122.41(i)(3)); and

4. Sample or monitor, at reasonable times, for the purposes of assuring Order compliance or as otherwise authorized by the CWA or the Water Code, any substances or parameters at any location. (40 CFR 122.41(i)(4))

G. Bypass

1. Definitions

a. "Bypass" means the intentional diversion of waste streams from any portion of a treatment facility. (40 CFR 122.41(m)(1)(i))

b. "Severe property damage" means substantial physical damage to property, damage to the treatment facilities, which causes them to become inoperable, or substantial and permanent loss of natural resources that can reasonably be expected to occur in the absence of a bypass. Severe property damage does not mean economic loss caused by delays in production. (40 CFR 122.41(m)(1)(ii))

2. Bypass not exceeding limitations. The Discharger may allow any bypass to occur which does not cause exceedances of effluent limitations, but only if it is for essential maintenance to assure efficient operation. These bypasses are not subject to the provisions listed in Standard Provisions – Permit Compliance I.G.3, I.G.4, and I.G.5 below. (40 CFR 122.41(m)(2))

3. Prohibition of bypass. Bypass is prohibited, and the Regional Water Board may take enforcement action against a Discharger for bypass, unless (40 CFR 122.41(m)(4)(i)):

a. Bypass was unavoidable to prevent loss of life, personal injury, or severe property damage (40 CFR 122.41(m)(4)(i)(A));

b. There were no feasible alternatives to the bypass, such as the use of auxiliary treatment facilities, retention of untreated wastes, or maintenance during normal periods of equipment downtime. This condition is not satisfied if adequate back-up equipment should have been installed in the exercise of reasonable engineering judgment to prevent a bypass that occurred during normal periods of equipment downtime or preventive maintenance (40 CFR 122.41(m)(4)(i)(B)); and

c. The Discharger submitted notice to the Regional Water Board as required under Standard Provisions – Permit Compliance I.G.5 below. (40 CFR 122.41(m)(4)(i)(C))

4. The Regional Water Board may approve an anticipated bypass, after considering its adverse effects, if the Regional Water Board determines that it will meet the three conditions listed in Standard Provisions – Permit Compliance I.G.3 above. (40 CFR 122.41(m)(4)(ii))

5. Notice

a. Anticipated bypass. If the Discharger knows in advance of the need for a bypass, it shall submit a notice, if possible at least 10 days before the date of the bypass. (40 CFR 122.41(m)(3)(i))

b. Unanticipated bypass. The Discharger shall submit notice of an unanticipated bypass as required in Standard Provisions - Reporting V.E below (24-hour notice). (40 CFR 122.41(m)(3)(ii))

H. Upset

Upset means an exceptional incident in which there is unintentional and temporary noncompliance with technology based permit effluent limitations because of factors beyond the reasonable control of the Discharger. An upset does not include noncompliance to the extent caused by operational error, improperly designed treatment facilities, inadequate treatment facilities, lack of preventive maintenance, or careless or improper operation. (40 CFR 122.41(n)(1))

1. Effect of an upset. An upset constitutes an affirmative defense to an action brought for noncompliance with such technology based permit effluent limitations if the requirements of Standard Provisions – Permit Compliance I.H.2 below are met. No determination made during administrative review of claims that noncompliance was

caused by upset, and before an action for noncompliance, is final administrative action subject to judicial review. (40 CFR 122.41(n)(2))

2. Conditions necessary for a demonstration of upset. A Discharger who wishes to establish the affirmative defense of upset shall demonstrate, through properly signed, contemporaneous operating logs or other relevant evidence that (40 CFR 122.41(n)(3)):

a. An upset occurred and that the Discharger can identify the cause(s) of the upset (40 CFR 122.41(n)(3)(i));

b. The permitted facility was, at the time, being properly operated (40 CFR 122.41(n)(3)(ii));

c. The Discharger submitted notice of the upset as required in Standard Provisions – Reporting V.E.2.b below (24-hour notice) (40 CFR 122.41(n)(3)(iii)); and

d. The Discharger complied with any remedial measures required under Standard Provisions – Permit Compliance I.C above. (40 CFR 122.41(n)(3)(iv))

3. Burden of proof. In any enforcement proceeding, the Discharger seeking to establish the occurrence of an upset has the burden of proof. (40 CFR 122.41(n)(4))

II. STANDARD PROVISIONS – PERMIT ACTION

A. General

This Order may be modified, revoked and reissued, or terminated for cause. The filing of a request by the Discharger for modification, revocation and reissuance, or termination, or a notification of planned changes or anticipated noncompliance does not stay any Order condition. (40 CFR 122.41(f))

B. Duty to Reapply

If the Discharger wishes to continue an activity regulated by this Order after the expiration date of this Order, the Discharger must apply for and obtain a new permit. (40 CFR 122.41(b))

C. Transfers

This Order is not transferable to any person except after notice to the Regional Water Board. The Regional Water Board may require modification or revocation and reissuance of the Order to change the name of the Discharger and incorporate such other requirements as may be necessary under the CWA and the Water Code. (40 CFR 122.41(l)(3) and 122.61)

III. STANDARD PROVISIONS – MONITORING

A. Samples and measurements taken for the purpose of monitoring shall be representative of the monitored activity. (40 CFR 122.41(j)(1))

B. Monitoring results must be conducted according to test procedures under 40 CFR Part 136 or, in the case of sludge use or disposal, approved under 40 CFR Part 136 unless otherwise specified in 40 CFR Part 503 unless other test procedures have been specified in this Order. (40 CFR 122.41(j)(4) and 122.44(i)(1)(iv))

IV. STANDARD PROVISIONS – RECORDS

A. Except for records of monitoring information required by this Order related to the Discharger's sewage sludge use and disposal activities, which shall be retained for a period of at least 5 years (or longer as required by 40 CFR Part 503), the Discharger shall retain records of all monitoring information, including all calibration and maintenance records and all original strip chart recordings for continuous monitoring instrumentation, copies of all reports required by this Order, and records of all data used to complete the application for this Order, for a period of at least three (3) years from the date of the sample, measurement, report or application. This period may be extended by request of the Regional Water Board Executive Officer at any time. (40 CFR 122.41(j)(2))

B. Records of monitoring information shall include:

1. The date, exact place, and time of sampling or measurements (40 CFR 122.41(j)(3)(i));

2. The individual(s) who performed the sampling or measurements (40 CFR 122.41(j)(3)(ii));

3. The date(s) analyses were performed (40 CFR 122.41(j)(3)(iii));

4. The individual(s) who performed the analyses (40 CFR 122.41(j)(3)(iv));

5. The analytical techniques or methods used (40 CFR 122.41(j)(3)(v)); and

6. The results of such analyses. (40 CFR 122.41(j)(3)(vi))

C. Claims of confidentiality for the following information will be denied (40 CFR 122.7(b)):

1. The name and address of any permit applicant or Discharger (40 CFR 122.7(b)(1)); and

2. Permit applications and attachments, permits and effluent data. (40 CFR 122.7(b)(2))

V. STANDARD PROVISIONS – REPORTING

A. Duty to Provide Information

The Discharger shall furnish to the Regional Water Board, State Water Board, or USEPA within a reasonable time, any information which the Regional Water Board, State Water Board, or USEPA may request to determine whether cause exists for modifying, revoking and reissuing, or terminating this Order or to determine compliance with this Order. Upon request, the Discharger shall also furnish to the Regional Water Board, State Water Board, or USEPA copies of records required to be kept by this Order. (40 CFR 122.41(h); Wat. Code, § 13267)

B. Signatory and Certification Requirements

1. All applications, reports, or information submitted to the Regional Water Board, State Water Board, and/or USEPA shall be signed and certified in accordance with Standard Provisions – Reporting V.B.2, V.B.3, V.B.4, and V.B.5 below. (40 CFR 122.41(k))

2. All permit applications shall be signed by either a principal executive officer or ranking elected official. For purposes of this provision, a principal executive officer of a federal agency includes: (i) the chief executive officer of the agency, or (ii) a senior executive officer having responsibility for the overall operations of a principal geographic unit of the agency (e.g., Regional Administrators of USEPA). (40 CFR 122.22(a)(3)).

3. All reports required by this Order and other information requested by the Regional Water Board, State Water Board, or USEPA shall be signed by a person described in Standard Provisions – Reporting V.B.2 above, or by a duly authorized representative of that person. A person is a duly authorized representative only if:

a. The authorization is made in writing by a person described in Standard Provisions – Reporting V.B.2 above (40 CFR 122.22(b)(1));

b. The authorization specifies either an individual or a position having responsibility for the overall operation of the regulated facility or activity such as the position of plant manager, operator of a well or a well field, superintendent, position of equivalent responsibility, or an individual or position having overall responsibility for environmental matters for the company. (A duly authorized representative may thus be either a named individual or any individual occupying a named position.) (40 CFR 122.22(b)(2)); and

c. The written authorization is submitted to the Regional Water Board and State Water Board. (40 CFR 122.22(b)(3))

4. If an authorization under Standard Provisions – Reporting V.B.3 above is no longer accurate because a different individual or position has responsibility for the overall operation of the facility, a new authorization satisfying the requirements of Standard

Provisions – Reporting V.B.3 above must be submitted to the Regional Water Board and State Water Board prior to or together with any reports, information, or applications, to be signed by an authorized representative. (40 CFR 122.22(c))

5. Any person signing a document under Standard Provisions – Reporting V.B.2 or V.B.3 above shall make the following certification:

"*I certify under penalty of law that this document and all attachments were prepared under my direction or supervision in accordance with a system designed to assure that qualified personnel properly gather and evaluate the information submitted. Based on my inquiry of the person or persons who manage the system or those persons directly responsible for gathering the information, the information submitted is, to the best of my knowledge and belief, true, accurate, and complete. I am aware that there are significant penalties for submitting false information, including the possibility of fine and imprisonment for knowing violations.*" (40 CFR 122.22(d))

C. Monitoring Reports

1. Monitoring results shall be reported at the intervals specified in the Monitoring and Reporting Program (Attachment E) in this Order. (40 CFR 122.22(l)(4))

2. Monitoring results must be reported on a Discharge Monitoring Report (DMR) form or forms provided or specified by the Regional Water Board or State Water Board for reporting results of monitoring of sludge use or disposal practices. (40 CFR 122.41(l)(4)(i))

3. If the Discharger monitors any pollutant more frequently than required by this Order using test procedures approved under 40 CFR Part 136 or, in the case of sludge use or disposal, approved under 40 CFR Part 136 unless otherwise specified in 40 CFR Part 503, or as specified in this Order, the results of this monitoring shall be included in the calculation and reporting of the data submitted in the DMR or sludge reporting form specified by the Regional Water Board. (40 CFR 122.41(l)(4)(ii))

4. Calculations for all limitations, which require averaging of measurements, shall utilize an arithmetic mean unless otherwise specified in this Order. (40 CFR 122.41(l)(4)(iii))

D. Compliance Schedules

Reports of compliance or noncompliance with, or any progress reports on, interim and final requirements contained in any compliance schedule of this Order, shall be submitted no later than 14 days following each schedule date. (40 CFR 122.41(l)(5))

E. Twenty-Four Hour Reporting

1. The Discharger shall notify the Office of Emergency Services of any noncompliance that may endanger health or the environment within two (2) hours from the time the Discharger becomes aware of the circumstances. The Discharger shall notify the

Central Valley Water Board of the noncompliance by telephone or fax within 24 hours from the time the Discharger becomes aware of the circumstances. A written submission shall also be provided to the Central Valley Water Board within five (5) days of the time the Discharger becomes aware of the circumstances. The written submission shall contain a description of the noncompliance and its cause; the period of noncompliance, including exact dates and times, and if the noncompliance has not been corrected, the anticipated time it is expected to continue; and steps taken or planned to reduce, eliminate, and prevent reoccurrence of the noncompliance. (40 CFR 122.41(l)(6)(i))

2. The following shall be included as information that must be reported within 24 hours under this paragraph (40 CFR 122.41(l)(6)(ii)):

a. Any unanticipated bypass that exceeds any effluent limitation in this Order. (40 CFR 122.41(l)(6)(ii)(A))

b. Any upset that exceeds any effluent limitation in this Order. (40 CFR 122.41(l)(6)(ii)(B))

3. The Regional Water Board may waive the above-required written report under this provision on a case-by-case basis if an oral report has been received within 24 hours. (40 CFR 122.41(l)(6)(iii))

F. Planned Changes

The Discharger shall give notice to the Regional Water Board as soon as possible of any planned physical alterations or additions to the permitted facility. Notice is required under this provision only when (40 CFR 122.41(l)(1)):

1. The alteration or addition to a permitted facility may meet one of the criteria for determining whether a facility is a new source in 40 CFR 122.29(b) (40 CFR 122.41(l)(1)(i)); or

2. The alteration or addition could significantly change the nature or increase the quantity of pollutants discharged. This notification applies to pollutants that are not subject to effluent limitations in this Order. (40 CFR 122.41(l)(1)(ii))

3. The alteration or addition results in a significant change in the Discharger's sludge use or disposal practices, and such alteration, addition, or change may justify the application of permit conditions that are different from or absent in the previous permit, including notification of additional use or disposal sites not reported during the permit application process or not reported pursuant to an approved land application plan. (40 CFR 122.41(l)(1)(iii))

G. Anticipated Noncompliance

The Discharger shall give advance notice to the Regional Water Board or State Water Board of any planned changes in the permitted facility or activity that may result in noncompliance with General Order requirements. (40 CFR 122.41(l)(2))

H. Other Noncompliance

The Discharger shall report all instances of noncompliance not reported under Standard Provisions – Reporting V.C, V.D, and V.E above at the time monitoring reports are submitted. The reports shall contain the information listed in Standard Provision – Reporting V.E above. (40 CFR 122.41(l)(7))

I. Other Information

When the Discharger becomes aware that it failed to submit any relevant facts in a permit application, or submitted incorrect information in a permit application or in any report to the Regional Water Board, State Water Board, or USEPA, the Discharger shall promptly submit such facts or information. (40 CFR 122.41(l)(8))

VI. STANDARD PROVISIONS – ENFORCEMENT

A. The Regional Water Board is authorized to enforce the terms of this permit under several provisions of the Water Code, including, but not limited to, sections 13385, 13386, and 13387.

VII. ADDITIONAL PROVISIONS – NOTIFICATION LEVELS

A. Publicly-Owned Treatment Works (POTWs)

All POTWs shall provide adequate notice to the Regional Water Board of the following (40 CFR 122.42(b)):

1. Any new introduction of pollutants into the POTW from an indirect discharger that would be subject to sections 301 or 306 of the CWA if it were directly discharging those pollutants (40 CFR 122.42(b)(1)); and

2. Any substantial change in the volume or character of pollutants being introduced into that POTW by a source introducing pollutants into the POTW at the time of adoption of the Order. (40 CFR 122.42(b)(2))

3. Adequate notice shall include information on the quality and quantity of effluent introduced into the POTW as well as any anticipated impact of the change on the quantity or quality of effluent to be discharged from the POTW.
(40 CFR 122.42(b)(3).

ATTACHMENT E – MONITORING AND REPORTING PROGRAM

Table of Contents

I. General Monitoring Provisions E-2
II. Monitoring Locations E-3
III. Influent Monitoring Requirements E-4
  A. Monitoring Location INF-001 ..... E-4
IV. Effluent Monitoring Requirements E-4
  A. Monitoring Location EFF-001 ..... E-4
V. Whole Effluent Toxicity Testing Requirements E-6
VI. Land Discharge Monitoring Requirements – Not Applicable E-9
VII. Reclamation Monitoring Requirements – Not Applicable E-9
VIII. Receiving Water Monitoring Requirements – Surface Water and Groundwater E-9
  A. Monitoring Locations RSW-001 and RSW-002 ..... E-9
IX. Other Monitoring Requirements E-10
  A. Biosolids E-10
  B. Municipal Water Supply E-10
X. Reporting Requirements E-10
  A. General Monitoring and Reporting Requirements E-11
  B. Self Monitoring Reports (SMRs) E-12
  C. Discharge Monitoring Reports (DMRs) – Not Applicable E-15
  D. Other Reports E-15

List of Tables

Table E-1. Monitoring Station Locations E-3
Table E-2. Influent Monitoring E-4
Table E-3. Effluent Monitoring E-4
Table E-4. Chronic Toxicity Testing Dilution Series E-7
Table E-5. Receiving Water Monitoring Requirements E-9
Table E-6. Municipal Water Supply Monitoring Requirements E-10
Table E-7. Ultraviolet Light Disinfection System Monitoring Requirements E-11
Table E-8. Monitoring Periods and Reporting Schedule E-12
Table E-9. Reporting Requirements for Special Provisions Reports E-15

ATTACHMENT E – MONITORING AND REPORTING PROGRAM

Title 40 of the Code of Federal Regulations (CFR), section 122.48 (40 CFR 122.48) requires that all NPDES permits specify monitoring and reporting requirements. California Water Code (Water Code) sections 13267 and 13383 also authorize the Regional Water Quality Control Board, Central Valley Region (Central Valley Water Board) to require technical and monitoring reports. This Monitoring and Reporting Program establishes monitoring and reporting requirements, which implement the federal and California regulations.

I. GENERAL MONITORING PROVISIONS

A. Samples and measurements taken as required herein shall be representative of the volume and nature of the monitored discharge. All samples shall be taken at the monitoring locations specified below and, unless otherwise specified, before the monitored flow joins or is diluted by any other waste stream, body of water, or substance. Monitoring locations shall not be changed without notification to and the approval of the Central Valley Water Board.

B. Effluent samples shall be taken downstream of the last addition of wastes to the treatment or discharge works where a representative sample may be obtained prior to mixing with the receiving waters. Samples shall be collected at such a point and in such a manner to ensure a representative sample of the discharge.

C. Chemical, bacteriological, and bioassay analyses of any material required by this Order shall be conducted by a laboratory certified for such analyses by the State Water Board's Division of Drinking Water (DDW). Laboratories that perform sample analyses must be identified in all monitoring reports submitted to the Central Valley Water Board. In the event a certified laboratory is not available to the Discharger for any onsite field measurements such as pH, dissolved oxygen, turbidity, temperature and residual chlorine, such analyses performed by a noncertified laboratory will be accepted provided a Quality Assurance-Quality Control Program is instituted by the laboratory. A manual containing the steps followed in this program for any onsite field measurements such as pH, dissolved oxygen, turbidity, temperature and residual chlorine must be kept onsite in the treatment facility laboratory and shall be available for inspection by Central Valley Water Board staff. The Discharger must demonstrate sufficient capability (qualified and trained employees, properly calibrated and maintained field instruments, etc.) to adequately perform these field measurements. The Quality Assurance-Quality Control Program must conform to USEPA guidelines or to procedures approved by the Central Valley Water Board.

D. Appropriate flow measurement devices and methods consistent with accepted scientific practices shall be selected and used to ensure the accuracy and reliability of measurements of the volume of monitored discharges. All monitoring instruments and devices used by the Discharger to fulfill the prescribed monitoring program shall be properly maintained and calibrated as necessary, at least yearly, to ensure their continued accuracy. All flow measurement devices shall be calibrated at least once per year to ensure continued accuracy of the devices.

E. Monitoring results, including noncompliance, shall be reported at intervals and in a manner specified in this Monitoring and Reporting Program.

F. Laboratories analyzing monitoring samples shall be certified by DDW, in accordance with the provision of Water Code section 13176, and must include quality assurance/quality control data with their reports.

G. The Discharger shall conduct analysis on any sample provided by USEPA as part of the Discharge Monitoring Quality Assurance (DMQA) program. The results of any such analysis shall be submitted to USEPA's DMQA manager.

H. The Discharger shall file with the Central Valley Water Board technical reports on self-monitoring performed according to the detailed specifications contained in this Monitoring and Reporting Program.

I. The results of all monitoring required by this Order shall be reported to the Central Valley Water Board, and shall be submitted in such a format as to allow direct comparison with the limitations and requirements of this Order. Unless otherwise specified, discharge flows shall be reported in terms of the monthly average and the daily maximum discharge flows.

II. MONITORING LOCATIONS

The Discharger shall establish the following monitoring locations to demonstrate compliance with the effluent limitations, discharge specifications, and other requirements in this Order:

Table E-1. Monitoring Station Locations

Discharge Point Name	Monitoring Location Name	Monitoring Location Description
--	INF-001	A location where a representative sample of the influent into the Facility can be collected prior to any plant return flows or treatment processes.
--	UVS-001	Ultraviolet Light Disinfection System
001	EFF-001	A location where a representative sample of the effluent from the Facility can be collected after all treatment processes and prior to commingling with other waste streams or being discharged into Jackson Creek.
--	RSW-001	Jackson Creek, 200 feet upstream of Discharge Point No. 001.
--	RSW-002	Jackson Creek, 200 feet downstream of Discharge Point No. 001.
--	SPL-001	A location where a representative sample of the municipal water supply can be obtained.
--	BIO-001	A location where a representative sample of the biosolids can be obtained.

III. INFLUENT MONITORING REQUIREMENTS

A. Monitoring Location INF-001

1. The Discharger shall monitor influent to the Facility at Monitoring Location INF-001 as follows:

Table E-2. Influent Monitoring

Parameter	Units	Sample Type	Minimum Sampling Frequency	Required Analytical Test Method
Flow	MGD	Meter	Continuous	[1]
Biochemical Oxygen Demand (5-day @ 20°C)	mg/L	24-hr Composite[2]	1/Week	[1]
Total Suspended Solids	mg/L	24-hr Composite[2]	1/Week	[1]

[1] Pollutants shall be analyzed using the analytical methods described in 40 CFR Part 136; or by methods approved by the Central Valley Water Board or the State Water Board.
[2] 24-hour flow proportional composite.

IV. EFFLUENT MONITORING REQUIREMENTS

A. Monitoring Location EFF-001

1. The Discharger shall monitor treated wastewater at Monitoring Location EFF-001 as follows. If more than one analytical test method is listed for a given parameter, the Discharger must select from the listed methods and corresponding Minimum Level. Where a CTR constituent is listed in Appendix 4 of the SIP, the reporting level specified in Attachment I must be achieved by the laboratory conducting the analysis.

Table E-3. Effluent Monitoring

Parameter	Units	Sample Type	Minimum Sampling Frequency	Required Analytical Test Method	Reporting Level
Flow	MGD	Meter	Continuous	[1]	--
Conventional Pollutants					
Biochemical Oxygen Demand (5-day @ 20°C)	mg/L	24-hr Composite[2]	2/Week	[1]	--
	lbs/day	Calculate	2/Week	--	--
pH	standard units	Grab	2/Week[3,4]	[1]	--
Total Suspended Solids	mg/L	24-hr Composite[2]	2/Week	[1]	--
	lbs/day	Calculate	2/Week	--	--
Priority Pollutants					
Chlorodibromomethane	µg/L	Grab	1/Month	[1]	0.5
Cyanide, Total (as CN)	µg/L	24-hr Composite[2]	1/Month	[1]	5
Dichlorobromomethane	µg/L	Grab	1/Month	[1]	5
Mercury, Total Recoverable	µg/L	Grab	1/Quarter	[1,7]	0.2
	lbs/month	Calculate	1/Quarter	--	--

Parameter	Units	Sample Type	Minimum Sampling Frequency	Required Analytical Test Method	Reporting Level
Priority Pollutants and Other Constituents of Concern	µg/L	See Att. I	See Att. I	[1,5]	--
Non-Conventional Pollutants					
Ammonia Nitrogen, Total (as N)	mg/L	Grab	2/Week[3,8]	[1]	--
	lbs/day	Calculate	2/Week	--	--
Chlorine, Total Residual[14]	mg/L	Meter	Continuous	[1,9]	--
Electrical Conductivity @ 25°C	µmhos/cm	Grab	1/Week	[1]	--
Hardness (as $CaCO_3$)	mg/L	Grab	1/Month[10]	[1]	--
Nitrate Nitrogen, Total (as N)	mg/L	Grab	1/Month[11]	[1]	--
Nitrite Nitrogen, Total (as N)	mg/L	Grab	1/Month[11]	[1]	--
Temperature	°C	Grab	2/Week[3,4]	[1]	--
Total Coliform Organisms	MPN/ 100 mL	Grab	3/Week[12]	[1]	--
Total Dissolved Solids	mg/L	Grab	1/Quarter	[1]	--
Total Trihalomethanes[13]	µg/L	Grab	1/Month	[1]	--
Turbidity	NTU	Meter	Continuous	[1]	--

1 Pollutants shall be analyzed using the analytical methods described in 40 CFR Part 136 or by methods approved by the Central Valley Water Board or the State Water Board.

2 24-hour flow proportional composite.

3 pH and temperature shall be recorded at the time of ammonia sample collection.

4 A hand-held field meter may be used, provided the meter utilizes a USEPA-approved algorithm/method and is calibrated and maintained in accordance with the manufacturer's instructions. A calibration and maintenance log for each meter used for monitoring required by this Monitoring and Reporting Program shall be maintained at the Facility.

5 The maximum required Reporting Level is specified in Attachment I, Table I-1, Priority Pollutants and Other Constituents of Concern.

6 In order to verify if bis (2-ethylhexyl) phthalate is truly present in the effluent discharge, the Discharger shall take steps to assure that sample containers, sampling apparatus, and analytical equipment are not sources of the detected contaminant.

7 Unfiltered methylmercury and total mercury samples shall be taken using clean hands/dirty hands procedures, as described in USEPA method 1669: Sampling Ambient Water for Trace Metals at EPA Water Quality Criteria Levels, for collection of equipment blanks (section 9.4.4.2), and shall be analyzed by USEPA method 1630/1631 (Revision E) with a method detection limit of 0.02 ng/L for methylmercury and 0.2 ng/L for total mercury.

8 Concurrent with whole effluent toxicity monitoring.

9 Total chlorine residual must be monitored with a method sensitive to and accurate at the permitted level of 0.01 mg/L.

10 Hardness samples shall be collected concurrently with metals samples.

11 Monitoring for nitrite and nitrate shall be conducted concurrently.

12 Samples for total coliform organisms may be collected at any point following disinfection.

13 Applies to the sum of bromoform, chlorodibromomethane, chloroform, and dichlorobromomethane.

14 The Discharger shall monitor chlorine residual continuously through 28 February 2018 or until UV system upgrades are fully operational. After which time, the Discharger may request in writing that chlorine residual monitoring be reduced to only periods when chlorine is used at the facility. Approval for this change shall be based on whether or not previous monitoring results show that chlorine residual effluent limits have been met. The monitoring change may only be implemented after the Discharger receives written approval from the Executive Officer.

V. WHOLE EFFLUENT TOXICITY TESTING REQUIREMENTS

A. Acute Toxicity Testing. The Discharger shall conduct acute toxicity testing to determine whether the effluent is contributing acute toxicity to the receiving water. The Discharger shall meet the following acute toxicity testing requirements:

1. *Monitoring Frequency* – The Discharger shall perform semi-annual acute toxicity testing, concurrent with effluent ammonia sampling.

2. *Sample Types* – The Discharger may use flow-through, static non-renewal, or static renewal testing. For static non-renewal and static renewal testing, the samples shall be flow proportional 24-hour composites and shall be representative of the volume and quality of the discharge. The effluent samples shall be taken at Monitoring Location EFF-001.

3. *Test Species* – Test species shall be rainbow trout (*Oncorhynchus mykiss*).

4. *Methods* – The acute toxicity testing samples shall be analyzed using EPA-821-R-02-012, Fifth Edition. Temperature, total residual chlorine, and pH shall be recorded at the time of sample collection. No pH adjustment may be made unless approved by the Executive Officer.

5. *Test Failure* – If an acute toxicity test does not meet all test acceptability criteria, as specified in the test method, the Discharger must re-sample and re-test as soon as possible, not to exceed 7 days following notification of test failure.

B. Chronic Toxicity Testing. The Discharger shall conduct three species chronic toxicity testing to determine whether the effluent is contributing chronic toxicity to the receiving water. The Discharger shall meet the following chronic toxicity testing requirements:

1. *Monitoring Frequency –* The Discharger shall perform semi-annual three species chronic toxicity testing.

2. *Sample Types* – Effluent samples shall be flow proportional 24-hour composites and shall be representative of the volume and quality of the discharge. The effluent samples shall be taken at Monitoring Location EFF-001. The receiving water control shall be a grab sample obtained from Monitoring Location RSW-001, as identified in this Monitoring and Reporting Program.

3. *Sample Volumes* – Adequate sample volumes shall be collected to provide renewal water to complete the test in the event that the discharge is intermittent.

4. *Test Species* – Chronic toxicity testing measures sublethal (e.g., reduced growth, reproduction) and/or lethal effects to test organisms exposed to an effluent compared to that of the control organisms. The Discharger shall conduct chronic toxicity tests with:

- The cladoceran, water flea, *Ceriodaphnia dubia* (survival and reproduction test);

- The fathead minnow, *Pimephales promelas* (larval survival and growth test); and
- The green alga, *Selenastrum capricornutum* (growth test).

5. *Methods* – The presence of chronic toxicity shall be estimated as specified in *Short-term Methods for Estimating the Chronic Toxicity of Effluents and Receiving Waters to Freshwater Organisms, Fourth Edition*, EPA/821-R-02-013, October 2002.

6. *Reference Toxicant* – As required by the SIP, all chronic toxicity tests shall be conducted with concurrent testing with a reference toxicant and shall be reported with the chronic toxicity test results.

7. *Dilutions* – For regular and accelerated chronic toxicity monitoring, it is not necessary to perform the test using a dilution series. The test may be performed using 100% effluent and two controls. For Toxicity Reduction Evaluation (TRE) monitoring, the chronic toxicity testing shall be performed using the dilution series identified in Table E-4, below, unless use of an alternative diluent is detailed in the submitted TRE Action Plan, or when the receiving water is toxic.

Table E-4. Chronic Toxicity Testing Dilution Series

Sample	Dilutions (%)					Controls	
	100	75	50	25	12.5	Receiving Water	Laboratory Water
% Effluent	100	75	50	25	12.5	0	0
% Receiving Water	0	25	50	75	87.5	100	0
% Laboratory Water	0	0	0	0	0	0	100

8. *Test Failure* – The Discharger must re-sample and re-test as soon as possible, but no later than fourteen (14) days after receiving notification of a test failure. A test failure is defined as follows:

a. The reference toxicant test or the effluent test does not meet all test acceptability criteria as specified in the *Short-term Methods for Estimating the Chronic Toxicity of Effluents and Receiving Waters to Freshwater Organisms, Fourth Edition*, EPA/821-R-02-013, October 2002 (Method Manual), and its subsequent amendments or revisions; or

b. The percent minimum significant difference (PMSD) measured for the test exceeds the upper PMSD bound variability criterion in Table 6 on page 52 of the Method Manual. (A retest is only required in this case if the test results do not exceed the monitoring trigger specified in the Special Provision at section VI. 2.a.iii. of the Order.)

C. WET Testing Notification Requirements. The Discharger shall notify the Central Valley Water Board within 24-hours after the receipt of test results exceeding the monitoring trigger during regular or accelerated monitoring, or an exceedance of the acute toxicity effluent limitation.

D. WET Testing Reporting Requirements. All toxicity test reports shall include the contracting laboratory's complete report provided to the Discharger and shall be in accordance with the appropriate "Report Preparation and Test Review" sections of the method manuals. At a minimum, whole effluent toxicity monitoring shall be reported as follows:

1. **Chronic WET Reporting.** Regular chronic toxicity monitoring results shall be reported to the Central Valley Water Board with the monthly discharger self-monitoring reports, and shall contain, at minimum:

   c. The results expressed in TUc, measured as 100/NOEC, and also measured as 100/LC50, 100/EC25, 100/IC25, and 100/IC50, as appropriate.

   d. The statistical methods used to calculate endpoints;

   e. The statistical output page, which includes the calculation of the percent minimum significant difference (PMSD);

   f. The dates of sample collection and initiation of each toxicity test; and

   g. The results compared to the numeric toxicity monitoring trigger.

   Additionally, the monthly discharger self-monitoring reports shall contain an updated chronology of chronic toxicity test results expressed in TUc, and organized by test species, type of test (survival, growth or reproduction), and monitoring frequency, i.e., either quarterly, monthly, accelerated, or TRE.

2. **Acute WET Reporting.** Acute toxicity test results shall be submitted with the monthly discharger self-monitoring reports and reported as percent survival.

3. **TRE Reporting.** Reports for TREs shall be submitted in accordance with the schedule contained in the Discharger's approved TRE Workplan, or as amended by the Discharger's TRE Action Plan.

4. **Quality Assurance (QA).** The Discharger must provide the following information for QA purposes:

   a. Results of the applicable reference toxicant data with the statistical output page giving the species, NOEC, LOEC, type of toxicant, dilution water used, concentrations used, PMSD, and dates tested.

   b. The reference toxicant control charts for each endpoint, which include summaries of reference toxicant tests performed by the contracting laboratory.

   c. Any information on deviations or problems encountered and how they were dealt with.

VI. LAND DISCHARGE MONITORING REQUIREMENTS – NOT APPLICABLE

VII. RECLAMATION MONITORING REQUIREMENTS – NOT APPLICABLE

VIII. RECEIVING WATER MONITORING REQUIREMENTS – SURFACE WATER AND GROUNDWATER

A. Monitoring Locations RSW-001 and RSW-002

1. The Discharger shall monitor Jackson Creek at Monitoring Locations RSW-001 and RSW-002 as follows:

Table E-5. Receiving Water Monitoring Requirements

Parameter	Units	Sample Type	Minimum Sampling Frequency	Required Analytical Test Method
Flow	MGD	Meter	1/Day[1]	
Lake Amador Percent Effluent	%	Calculate[6]	1/Year	--
Conventional Pollutants				
pH	standard units	Grab	2/Week	[2,3,4]
Priority Pollutants				
Priority Pollutants and Other Constituents of Concern	µg/L	Att. I	Att. I[1]	[2,5]
Non-Conventional Pollutants				
Dissolved Oxygen	mg/L	Grab	2/Week	[2,3]
Electrical Conductivity @ 25°C	µmhos/cm	Grab	2/Week	[2,3]
Fecal Coliform Organisms	MPN/100 mL	Grab	1/Quarter	[2]
Hardness, Total (as $CaCO_3$)	mg/L	Grab	1/Quarter	[2,3]
Temperature	°F	Grab	2/Week	[2,3,4]
Turbidity	NTU	Grab	2/Week	[2,3]

1 Monitoring required at Monitoring Location RSW-001 only.
2 Pollutants shall be analyzed using the analytical methods described in 40 CFR Part 136 or by methods approved by the Central Valley Water Board or the State Water Board.
3 A hand-held field meter may be used, provided the meter utilizes a USEPA-approved algorithm/method and is calibrated and maintained in accordance with the manufacturer's instructions. A calibration and maintenance log for each meter used for monitoring required by this Monitoring and Reporting Program shall be maintained at the Facility.
4 pH and temperature shall be recorded at the time of ammonia sample collection.
5 Pollutants shall be analyzed using the analytical methods described in 40 CFR Part 136; for priority pollutants the methods must meet the lowest MLs specified in Appendix 4 of the SIP, where no methods are specified for a given pollutant, by methods approved by this Central Valley Water Board or the State Water Board.
6 Calculations shall be in accordance with Section VII.F of the Order, Compliance Determination for 20:1 Dilution of Wastewater in Lake Amador.

2. In conducting the receiving water sampling, a log shall be kept of the receiving water conditions throughout the reach bounded by Monitoring Locations RSW-001 and RSW-002. Attention shall be given to the presence or absence of:

a. Floating or suspended matter;
b. Discoloration;
c. Bottom deposits;

d. Aquatic life;
e. Visible films, sheens, or coatings;
f. Fungi, slimes, or objectionable growths; and
g. Potential nuisance conditions.

Notes on receiving water conditions shall be summarized in the monitoring report.

IX. OTHER MONITORING REQUIREMENTS

A. Biosolids

1. Monitoring Location BIO-001

a. A composite sample of sludge shall be collected annually at Monitoring Location BIO-001 in accordance with USEPA's *POTW Sludge Sampling and Analysis Guidance Document*, August 1989, and tested for the metals listed in Title 22.

b. Sampling records shall be retained for a minimum of **5 years**. A log shall be maintained of sludge quantities generated and of handling and disposal activities. The frequency of entries is discretionary; however, the log must be complete enough to serve as a basis for part of the annual report.

B. Municipal Water Supply

1. Monitoring Location SPL-001

The Discharger shall monitor the municipal water supply at Monitoring Location SPL-001 as follows. Publicly available data may be used in lieu of the monitoring established in Table E-6 below to demonstrate the average quality of the water supply.

Table E-6. Municipal Water Supply Monitoring Requirements

Parameter	Units	Sample Type	Minimum Sampling Frequency	Required Analytical Test Method
Electrical Conductivity @ 25°C[1]	µmhos/cm	Grab	1/Year	[2]
Standard Minerals[3]	mg/L	Grab	1/Year	[2]
Total Dissolved Solids[1]	mg/L	Grab	1/Year	[2]

[1] If the water supply is from more than one source, the total dissolved solids and electrical conductivity shall be reported as a weighted average and include copies of supporting calculations.
[2] Pollutants shall be analyzed using the analytical methods described in 40 CFR Part 136 or by methods approved by the Central Valley Water Board or the State Water Board.
[3] Standard minerals shall include all major cations and anions and include verification that the analysis is complete (i.e., cation/anion balance).

C. Ultraviolet Light (UV) Disinfection System

1. Monitoring Location UVS-001

The Discharger shall monitor the UV disinfection system at UVS-001 as follows:

Table E-7. Ultraviolet Light Disinfection System Monitoring Requirements

Parameter	Units	Sample Type	Minimum Sampling Frequency
Flow	MGD	Meter	Continuous [1]
Turbidity	NTU	Meter [2]	Continuous [1, 3]
Number of UV banks in operation	Number	Meter	Continuous [1]
UV Transmittance	Percent (%)	Meter	Continuous [1]
UV Dose [3]	MW-sec/cm^2	Calculated	Continuous [1]
Total Coliform Organisms	MPN/100 mL	Grab	1/Day

[1] For continuous analyzers, the Discharger shall report documented routine meter maintenance activities including date, time of day, and duration, in which the analyzer(s) is not in operation. If analyzer(s) fail to provide continuous monitoring for more than two hours and influent and/or effluent from the disinfection process is not diverted for retreatment, the Discharger shall obtain and report hourly manual and/or grab sample results. The Discharger shall not decrease power settings or reduce the number of UV lamp banks in operation while the continuous analyzers are out of service and water is being disinfected.

[2] The turbidity meter shall be stationed immediately after the filters, prior to the UV disinfection process.

[3] Report daily average and maximum turbidity.

[4] Report daily minimum hourly UV dose and daily average UV dose. The minimum hourly average dose shall consist of lowest hourly average dose provided in any channel that had at least one bank of lamps operating during the hour interval. For channels that did not operate for the entire hour interval, the dose will be averaged based on the actual operation time.

X. REPORTING REQUIREMENTS

A. General Monitoring and Reporting Requirements

1. The Discharger shall comply with all Standard Provisions (Attachment D) related to monitoring, reporting, and recordkeeping.

2. Upon written request of the Central Valley Water Board, the Discharger shall submit a summary monitoring report. The report shall contain both tabular and graphical summaries of the monitoring data obtained during the previous year(s).

3. Compliance Time Schedules. For compliance time schedules included in the Order, the Discharger shall submit to the Central Valley Water Board, on or before each compliance due date, the specified document or a written report detailing compliance or noncompliance with the specific date and task. If noncompliance is reported, the Discharger shall state the reasons for noncompliance and include an estimate of the date when the Discharger will be in compliance. The Discharger shall notify the Central Valley Water Board by letter when it returns to compliance with the compliance time schedule.

4. The Discharger shall report to the Central Valley Water Board any toxic chemical release data it reports to the State Emergency Response Commission within 15 days of reporting the data to the Commission pursuant to section 313 of the "*Emergency Planning and Community Right to Know Act*" of 1986.

5. Reporting requirements shall be in accordance with due dates specified in this Order. If the due date is on a Saturday, Sunday, State holiday, or a day the corresponding Water Board(s) office(s) is(are) closed, the due date shall be on the next business day.

B. Self Monitoring Reports (SMRs)

1. The Discharger shall continue to submit eSMRs using the State Water Board's CIWQS Program Web site (http:www.waterboards.ca.gov/ciwqs/index.html). The Discharger shall maintain sufficient staffing and resources to ensure it submits eSMRs during the effective duration of this Order. This includes provision of training and supervision of individuals (e.g., Discharger personnel or consultant) on how to prepare and submit eSMRs.

2. Monitoring periods and reporting for all required monitoring shall be completed according to the following schedule:

Table E-8. Monitoring Periods and Reporting Schedule

Sampling Frequency	Monitoring Period Begins On…	Monitoring Period	SMR Due Date
Continuous	Permit effective date	Continuous	Submit with monthly SMR
1/Day	Permit effective date	(Midnight through 11:59 PM) or any 24-hour period that reasonably represents a calendar day for purposes of sampling.	Submit with monthly SMR
1/Week	Permit effective date	Sunday through Saturday	Submit with monthly SMR
2/Week	Permit effective date	Sunday through Saturday	Submit with monthly SMR
3/Week	Permit effective date	Sunday through Saturday	Submit with monthly SMR
1/Month	Permit effective date	First day of calendar month through last day of calendar month	1st day of the second month following the sampling period
1/Quarter	Permit effective date	1 January through 31 March 1 April through 30 June 1 July through 30 September 1 October through 31 December	1 May 1 August 1 November 1 February (of the following year)
2/Year	Permit effective date	1 January through 31 March 1 July through 30 September	1 May 1 November
1/Year	Permit effective date	1 January through 31 December	1 February (of the following year)

3. Reporting Protocols. The Discharger shall report with each sample result the applicable reported Reporting Level (RL) and the current laboratory's Method Detection Limit (MDL), as determined by the procedure in 40 CFR Part 136.

The Discharger shall report the results of analytical determinations for the presence of chemical constituents in a sample using the following reporting protocols:

a. Sample results greater than or equal to the RL shall be reported as measured by the laboratory (i.e., the measured chemical concentration in the sample).

b. Sample results less than the RL, but greater than or equal to the laboratory's MDL, shall be reported as "Detected, but Not Quantified," or DNQ. The estimated chemical concentration of the sample shall also be reported.

For the purposes of data collection, the laboratory shall write the estimated chemical concentration next to DNQ as well as the words "Estimated Concentration" (may be shortened to "Est. Conc."). The laboratory may, if such information is available, include numerical estimates of the data quality for the reported result. Numerical estimates of data quality may be percent accuracy (+ a percentage of the reported value), numerical ranges (low to high), or any other means considered appropriate by the laboratory.

c. Sample results less than the laboratory's MDL shall be reported as "Not Detected," or ND.

d. Dischargers are to instruct laboratories to establish calibration standards so that the Minimum Level (ML) value (or its equivalent if there is differential treatment of samples relative to calibration standards) is the lowest calibration standard. At no time is the Discharger to use analytical data derived from extrapolation beyond the lowest point of the calibration curve. The Discharger's laboratory(ies) may, as allowed for by the rules governing alterations to minimum level (ML) values in section 2.4.3 of the SIP, employ a calibration standard lower than the ML value in Appendix 4 of the SIP.

4. Multiple Sample Data. When determining compliance with an AMEL for priority pollutants and more than one sample result is available, the Discharger shall compute the arithmetic mean unless the data set contains one or more reported determinations of "Detected, but Not Quantified" (DNQ) or "Not Detected" (ND). In those cases, the Discharger shall compute the median in place of the arithmetic mean in accordance with the following procedure.

a. The data set shall be ranked from low to high, ranking the reported ND determinations lowest, DNQ determinations next, followed by quantified values (if any). The order of the individual ND or DNQ determinations is unimportant.

b. The median value of the data set shall be determined. If the data set has an odd number of data points, then the median is the middle value. If the data set has an even number of data points, then the median is the average of the two values around the middle unless one or both of the points are ND or DNQ, in which case the median value shall be the lower of the two data points where DNQ is lower than a value and ND is lower than DNQ.

5. Reporting Requirements. In reporting the monitoring data, the Discharger shall arrange the data in tabular form so that the date, the constituents, and the concentrations are readily discernible.

a. The data shall be summarized to clearly illustrate whether the facility is operating in compliance with interim and/or final effluent limitations or with other waste

discharge requirements (e.g., discharge specifications, receiving water limitations, special provisions, etc.).

b. Reports must clearly show when discharging to Discharge Point No. 001 or other permitted discharge locations. Reports must show the date and time that the discharge started and stopped at each location.

c. The highest daily maximum for the month and monthly and weekly averages shall be determined and recorded as needed to demonstrate compliance.

6. Calculation Requirements. The following shall be calculated and reported in the eSMRs:

a. Daily Dry Weather Flow. Calculate and report in Annual Report.

b. Mass Loading Limitations. For BOD_5, TSS, and ammonia, the Discharger shall calculate and report the mass loading (lbs/day) in the eSMRs. The mass loading shall be calculated as follows:

Mass Loading (lbs/day) = Flow (MGD) x Concentration (mg/L) x 8.34

When calculating daily mass loading, the daily average flow and constituent concentration shall be used. For weekly average mass loading, the weekly average flow and constituent concentration shall be used. For monthly average mass loading, the monthly average flow and constituent concentration shall be used.

c. Removal Efficiency (BOD_5 and TSS). The Discharger shall calculate and report the percent removal of BOD_5 and TSS in the eSMRs. The percent removal shall be calculated as specified in Section VII.A. of the Limitations and Discharge Requirements.

d. Monthly Mercury Effluent Limitations. The Discharger shall calculate and report the monthly mercury mass loading for the effluent. The monthly mass loading shall be calculated as specified in Section VII.B. of the Limitations and Discharge Requirements.

e. Total Coliform Organisms Effluent Limitations. The Discharger shall calculate and report the 7-day median of total coliform organisms for the effluent. The 7-day median of total coliform organisms shall be calculated as specified in Section VII.D. of the Limitations and Discharge Requirements.

f. Dissolved Oxygen Receiving Water Limitations. The Discharger shall calculate and report monthly in the self-monitoring report: i) the dissolved oxygen concentration, ii) the percent of saturation in the main water mass, and iii) the 95th percentile dissolved oxygen concentration.

g. Turbidity Receiving Water Limitations. The Discharger shall calculate and report the turbidity increase in the receiving water applicable to the natural

turbidity condition specified in Section V.A.17.a-e. of the Limitations and Discharge Requirements.

h. Temperature Receiving Water Limitations. The Discharger shall calculate and report the temperature increase in the receiving water based on the difference in temperature at Monitoring Locations RSW-001 and RSW-002.

i. Lake Amador Percent Effluent (Compliance with the 20:1 Dilution Ratio). The Discharger shall calculate the percent effluent in Lake Amador as described in the Compliance Determination section and reported in the December monitoring report.

7. The Discharger shall submit eSMRs in accordance with the following requirements:

a. When electronic submittal of data is required and CIWQS does not provide for entry into a tabular format within the system, the Discharger shall electronically submit the data in a tabular format as an attachment. The Discharger is not required to duplicate the submittal of data that is entered in a tabular format within CIWQS.

b. The Discharger shall include a cover letter with the eSMR. The information contained in the cover letter shall clearly identify violations of the WDRs; discuss corrective actions taken or planned; and the proposed time schedule for corrective actions. Identified violations must include a description of the requirement that was violated and a description of the violation.

c. Individual Reports must be submitted to the Central Valley Water Board, signed and certified as required by the Standard Provisions (Attachment D), to the address listed below:

Regional Water Quality Control Board
Central Valley Region
NPDES Compliance and Enforcement Unit
11020 Sun Center Dr., Suite #200
Rancho Cordova, CA 95670-6114

C. Discharge Monitoring Reports (DMRs) – Not Applicable

D. Other Reports

1. Special Study Reports and Progress Reports. As specified in the Special Provisions contained in section VI of the Order, special study reports and progress reports shall be submitted in accordance with the following reporting requirements. At minimum, the progress reports shall include a discussion of the status of final compliance, whether the Discharger is on schedule to meet the final compliance date, and the remaining tasks to meet the final compliance date.

Table E-9. Reporting Requirements for Special Provisions Reports

Special Provision	Reporting Requirements
Salinity and Chemical Additives Evaluation and Minimization Plan (Section VI.C.3.a)	**By 6 September 2014**
Biosolids Use and Disposal Plan (Section VI.C.5.a.v)	**By 6 June 2014**

2. The Discharger shall report the results of any special studies, acute and chronic toxicity testing, or TRE/TIE required by Special Provisions VI.C. of this Order. The Discharger shall report the progress in satisfaction of compliance schedule dates specified in the Special Provision at section VI.C.7 of this Order. The Discharger shall submit reports with the first monthly SMR scheduled to be submitted on or immediately following the report due date.

3. Within 60 days of permit adoption, the Discharger shall submit a report outlining reporting levels (RLs), method detection limits, and analytical methods for approval. The Discharger shall comply with the monitoring and reporting requirements for CTR constituents as outlined in section 2.3 and 2.4 of the SIP. The maximum required reporting levels for priority pollutant constituents shall be based on the Minimum Levels (MLs) contained in Appendix 4 of the SIP, determined in accordance with Section 2.4.2 and Section 2.4.3 of the SIP. In accordance with Section 2.4.2 of the SIP, when there is more than one ML value for a given substance, the Central Valley Water Board shall include as RLs, in the permit, all ML values, and their associated analytical methods, listed in Appendix 4 that are below the calculated effluent limitation. The Discharger may select any one of those cited analytical methods for compliance determination. If no ML value is below the effluent limitation, then the Central Valley Water Board shall select the lowest ML value, and its associated analytical method, listed in Appendix 4 for inclusion in the permit. Table I-1 (Attachment I) provides required maximum reporting levels in accordance with the SIP.

4. Annual Operations Report. By 30 January of each year, the Discharger shall submit a written report to the Executive Officer containing the following:

a. The names, certificate grades, and general responsibilities of all persons employed at the Facility.

b. The names and telephone numbers of persons to contact regarding the plant for emergency and routine situations.

c. A statement certifying when the flow meter(s) and other monitoring instruments and devices were last calibrated, including identification of who performed the calibration.

d. A statement certifying whether the current operation and maintenance manual, and contingency plan, reflect the wastewater treatment plant as currently constructed and operated, and the dates when these documents were last revised and last reviewed for adequacy.

e. The Discharger may also be requested to submit an annual report to the Central Valley Water Board with both tabular and graphical summaries of the monitoring data obtained during the previous year. Any such request shall be made in writing. The report shall discuss the compliance record. If violations have occurred, the report shall also discuss the corrective actions taken and planned to bring the discharge into full compliance with the waste discharge requirements.

ATTACHMENT F – FACT SHEET

Table of Contents

I. Permit Information F-3
II. Facility Description F-4
A. Description of Wastewater and Biosolids Treatment or Controls F-4
B. Discharge Points and Receiving Waters F-5
C. Summary of Previous Requirements and Self-Monitoring Report (SMR) Data F-5
D. Compliance Summary F-7
E. Planned Changes F-9
III. Applicable Plans, Policies, and Regulations F-9
A. Legal Authorities F-9
B. California Environmental Quality Act (CEQA) F-9
C. State and Federal Regulations, Policies, and Plans F-9
D. Impaired Water Bodies on CWA 303(d) List F-11
E. Other Plans, Policies and Regulations F-11
IV. Rationale For Effluent Limitations and Discharge Specifications F-11
A. Discharge Prohibitions F-13
B. Technology-Based Effluent Limitations F-14
1. Scope and Authority F-14
2. Applicable Technology-Based Effluent Limitations F-14
C. Water Quality-Based Effluent Limitations (WQBELs) F-15
1. Scope and Authority F-15
2. Applicable Beneficial Uses and Water Quality Criteria and Objectives F-16
3. Determining the Need for WQBELs F-25
4. WQBEL Calculations F-55
5. Whole Effluent Toxicity (WET) F-57
D. Final Effluent Limitations F-60
1. Mass-based Effluent Limitations F-60
2. Averaging Periods for Effluent Limitations F-61
3. Satisfaction of Anti-Backsliding Requirements F-61
4. Satisfaction of Antidegradation Policy F-66
5. Stringency of Requirements for Individual Pollutants F-66
E. Interim Effluent Limitations – Not Applicable F-68
F. Land Discharge Specifications – Not Applicable F-68
G. Reclamation Specifications – Not Applicable F-68
V. Rationale for Receiving Water Limitations F-68
A. Surface Water F-68
B. Groundwater – Not Applicable F-71
VI. Rationale for Monitoring and Reporting Requirements F-71
A. Influent Monitoring F-71
B. Effluent Monitoring F-71
C. Whole Effluent Toxicity Testing Requirements F-74
D. Receiving Water Monitoring F-74
1. Surface Water F-74

2. Groundwater – Not Applicable F-74
E. Other Monitoring Requirements F-75
1. Biosolids Monitoring F-75
2. Water Supply Monitoring F-75
3. Effluent and Receiving Water Characterization Study F-75
VII. Rationale for Provisions F-75
A. Standard Provisions F-75
B. Special Provisions F-76
1. Reopener Provisions F-76
2. Special Studies and Additional Monitoring Requirements F-76
3. Best Management Practices and Pollution Prevention F-80
4. Construction, Operation, and Maintenance Specifications F-80
5. Special Provisions for Municipal Facilities (POTWs Only) F-81
6. Other Special Provisions F-81
7. Compliance Schedules F-81
VIII. Public Participation F-81
A. Notification of Interested Parties F-82
B. Written Comments F-82
C. Public Hearing F-82
D. Waste Discharge Requirements Petitions F-82
E. Information and Copying F-83
F. Register of Interested Persons F-83
G. Additional Information F-83

List of Tables

Table F-1. Facility Information F-3
Table F-2. Historic Effluent Limitations and Monitoring Data F-5
Table F-3. Summary of Technology-based Effluent Limitations F-15
Table F-4. Basin Plan Beneficial Uses F-17
Table F-14. Salinity Water Quality Criteria/Objectives F-32
Table F-15. Carbon Tetrachloride Effluent Data F-37
Table F-16. Bis (2-Ethylhexyl) Phthalate Effluent Data F-40
Table F-17. Summary of Water Quality-Based Effluent Limitations F-57
Table F-18. Whole Effluent Chronic Toxicity Testing Results F-59
Table F-19. Summary of Final Effluent Limitations F-67

ATTACHMENT F – FACT SHEET

As described in the Findings in section II of this Order, this Fact Sheet includes the legal requirements and technical rationale that serve as the basis for the requirements of this Order.

This Order has been prepared under a standardized format to accommodate a broad range of discharge requirements for Dischargers in California. Only those sections or subsections of this Order that are specifically identified as "not applicable" have been determined not to apply to this Discharger. Sections or subsections of this Order not specifically identified as "not applicable" are fully applicable to this Discharger.

I. PERMIT INFORMATION

The following table summarizes administrative information related to the Facility.

Table F-1. Facility Information

WDID	5B030103001
Discharger	City of Jackson
Name of Facility	Wastewater Treatment Plant
Facility Address	39 North Highway 49-88
	Jackson, CA 95642
	Amador County
Facility Contact, Title and Phone	Eric Neuschmid, Chief Plant Operator, (209) 223-1607
Authorized Person to Sign and Submit Reports	Michael Daly, City Manager, (209) 233-1646 or Eric Neuschmid, Chief Plant Operator, (209) 223-1607
Mailing Address	33 Broadway, Jackson, CA 95642
Billing Address	Same as Mailing Address
Type of Facility	Publicly Owned Treatment Works (POTW)
Major or Minor Facility	Minor
Threat to Water Quality	1
Complexity	A
Pretreatment Program	Not Applicable
Reclamation Requirements	Not Applicable
Facility Permitted Flow	0.71 million gallons per day (MGD), average dry weather flow
Facility Design Flow	0.71 MGD
Watershed	Mokelumne River
Receiving Water	Jackson Creek
Receiving Water Type	Inland surface water

A. The City of Jackson (hereinafter Discharger) is the owner and operator of the City of Jackson Wastewater Treatment Plant (hereinafter Facility), a POTW.

For the purposes of this Order, references to the "discharger" or "permittee" in applicable federal and state laws, regulations, plans, or policy are held to be equivalent to references to the Discharger herein.

B. The Facility discharges wastewater to Jackson Creek, a water of the United States, and a tributary to the Mokelumne River within the Sacramento-San Joaquin Delta, via Amador Lake and Dry Creek. The Discharger was regulated by Order R5-2007-0133-01 which was adopted on 25 October 2007, amended on 4 October 2012, and expired on 1 October 2012. The terms and conditions of Order R5-2007-0133-01 were automatically continued and remained in effect until new Waste Discharge Requirements (WDRs) and National Pollutant Discharge Elimination System (NPDES) permit were adopted pursuant to this Order.

C. The Discharger filed a report of waste discharge and submitted an application for renewal of its WDRs and NPDES permit on 29 March 2012. A site visit was conducted on 23 May 2012, to observe operations and collect additional data to develop permit limitations and conditions.

II. FACILITY DESCRIPTION

The Discharger owns and operates a wastewater collection, treatment and disposal system for the City of Jackson, serving a population of approximately 4,600 individuals with approximately 1,650 connections. The Facility design flow capacity is 0.71 MGD.

A. Description of Wastewater and Biosolids Treatment or Controls

The treatment system consists of a mechanical bar screen and spiral augur with a washer compactor for screenings, two oxidation ditches, two secondary clarifiers, chlorine injection, four single media sand filters, chlorine contact basins, and dechlorination. Solids are digested in an aerated sludge holding tank and dewatered using a belt filter press. Solids are hauled to the Potrero Hills Landfill once per week.

In an e-mail dated 29 April 2013 the California Department of Health (CDPH) indicated that a new surface water treatment plant has been constructed by Jackson Valley Irrigation District (JVID) that treats raw water from Pardee Reservoir to replace drinking water provided from Lake Amador. Lake Amador, which receives water from Jackson Creek including tertiary treated effluent from the Facility, was the drinking water source for the JVID's Lake Amador Recreation Area and the Oaks Mobile Home Park. The Lake Amador Recreation Area drinking water source should be replaced by the newly constructed JVID treatment plant around September 2013. JVID is in the process of working on an additional project that will replace the Oaks Mobile Home Park drinking water source around 2016. The e-mail states that, "Given that the City of Jackson's current wastewater treatment plant provides disinfected tertiary treatment and the City usually provides 20:1 dilution in Lake Amador, our Department believes that adequate public health protection is being provided until both domestic water supply intakes are removed from Lake Amador." Once the Lake Amador Recreation Area and Oaks Mobile Home Park drinking water sources are removed from Lake Amador there will be no primary drinking water intakes remaining in Lake Amador. The CDPH e-mail further states, "In regard to recreation and irrigation uses of Lake Amador, provided the City's wastewater treatment plant's disinfected tertiary effluent meets the requirements specified in our Recycled Water Regulations for body contact and food crop irrigation, we have no objection to continued discharge into Jackson Creek."

Further discussions with CDPH and JVID, proceeding the 29 April 2013 CDPH e-mail, have brought to the attention of the Central Valley Water Board that there are additional users of raw water from Lake Amador that are not part of the Lake Amador Recreation Area or the Oaks Mobile Home Park that have connected to JVID's irrigation water pipeline to use it as a domestic water source. CDPH required JVID to survey their customers, determine if they are using the raw water as a domestic water source, notify the customers of the potential dangers of using raw irrigation water for domestic use, and provide these customers with bottled drinking water for drinking and cooking. JVID determined that approximately 80 customers out of 190 were using raw Lake Amador water as a domestic source. Currently, JVID is in the process of designing a drinking water treatment system using a planning grant from CDPH's State Revolving Fund that will provide their remaining customers, who use raw water from Lake Amador as a domestic water source, treated potable water. However, JVID is unsure if the funding for this project will be enough to provide all the remaining customers with treated drinking water because the maximum grant is estimated at three million dollars and there will not be a loan component to complete the remainder of the construction. With the uncertainty of removing all raw water domestic users from JVID's irrigation system, CDPH has indicated that they would like the 20:1 dilution requirement to remain in place until all JVID customers are receiving treated potable water.

B. Discharge Points and Receiving Waters

1. The Facility is located in Section 29, T6N, R11E, MDB&M, as shown in Attachment B, a part of this Order.

2. Treated municipal wastewater is discharged at Discharge Point No. 001 to Jackson Creek, a water of the United States and a tributary to the Mokelumne River within the Sacramento-San Joaquin Delta via Dry Creek and Amador Lake at a point latitude 38° 30' 28" N and longitude 120° 14' 04" W

C. Summary of Previous Requirements and Self-Monitoring Report (SMR) Data

Effluent limitations contained in Order R5-2007-0133-01 for discharges from Discharge Point No. 001 (Monitoring Location EFF-001) and representative monitoring data from the term of Order R5-2007-0133-01 are as follows:

Table F-2. Historic Effluent Limitations and Monitoring Data

Parameter	Units	Effluent Limitation			Monitoring Data (From January 2008 To May 2012)		
		Average Monthly	Average Weekly	Maximum Daily	Highest Average Monthly Discharge	Highest Average Weekly Discharge	Highest Daily Discharge
Flow	MGD	0.71	--	--	--	--	2.198
Conventional Pollutants							
Biochemical Oxygen Demand (5-day @ 20°C)	mg/L	10	15	30	7.2	11.5	12
	lbs/day[1]	60	90	180	39	75	106
	% removal	85	--	--	NR	--	--

Parameter	Units	Effluent Limitation			Monitoring Data (From January 2008 To May 2012)		
		Average Monthly	Average Weekly	Maximum Daily	Highest Average Monthly Discharge	Highest Average Weekly Discharge	Highest Daily Discharge
pH	standard units	--	--	6.5 – 8.0	--	--	6.1 – 7.9
Total Suspended Solids	mg/L	10	15	30	12	13	17
	lbs/day[1]	60	90	180	21	41	60
	% removal	85	--	--	NR	--	--
Priority Pollutants							
Copper, Total Recoverable	µg/L	--	--	37.32[2]	--	--	9.7
		3.22[3]	--	6.46[3]	7.3	--	7.3
Cyanide, Total (as CN)	µg/L	--	--	18.66[2]	--	--	2.8 J
		4.26[3]	--	8.54[3]	13	--	13
Dichlorobromomethane	µg/L	--	--	4.67[2]	--	--	7.0
		0.56[3]	--	1.12[3]	10	--	10
2,6-Dinitrotoluene	µg/L	--	--	3.42[2]	--	--	<0.6
		0.05[3]		0.10[3]	<0.36	--	<0.36
1,2-Diphenylhydrazine	µg/L	--	--	0.62[2]	--	--	<0.5
		0.04[3]	--	0.08[3]	0.43 J	--	0.43 J
Silver, Total Recoverable	µg/L	--	--	3.73[2]	--	--	<1
		0.49[3]	--	0.99[3]	<0.19	--	<0.19
Tetrachloroethene	µg/L	--	--	4.67[2]	--	--	<0.1
		0.8[3]	--	1.6[3]	<0.1	--	<0.1
Zinc, Total Recoverable	µg/L	--	--	311[2]	--	--	170
		30[3]	--	60[3]	140	--	140
Non-Conventional Pollutants							
Aluminum, Total Recoverable[4]	µg/L	--	--	342.1	--	--	360
		71.2	--	142.9	230	--	230
Ammonia Nitrogen, Total (as N)	mg/L	[5]	--	[5]	3.9		10
		1.2[6]	--	4.2[6]	2.4		7.3
		1.0[7]	--	3.7[7]	--	--	--
Chlorine, Total Residual	µg/L	--	0.011[8]	0.019[9]	--	--	0.167
Diazinon	µg/L	--	--	1.18[2]	--	--	<0.02
	µg/L	0.04[3]	--	0.08[3]	0.099	--	0.099 J
Electrical Conductivity @ 25°C	µmhos/cm	500[10]	--	--	517[11]	--	--
Iron, Total Recoverable	µg/L	300[10]	--	--	108[11]	--	--
Manganese, Total Recoverable	µg/L	50[10]	--	--	32[11]	--	--
Mercury, Total Recoverable	lbs/month	0.0016[12]	--	--	0.806	--	--
Nitrate Nitrogen, Total (as NO_3)	µg/L	45	--	--	62	--	--
Settleable Solids	ml/L	0.1	--	0.2	<0.1	--	<0.1
Total Coliform Organisms	MPN/100 mL	23[13]	2.2[14]	240[15]	452	900	2400
Turbidity	NTU	2[16]	5[17]	10[18]	8.5	9.7	14
Acute Toxicity	% Survival	--	70[19]	90[20]	--	--	100[21]

Parameter	Units	Effluent Limitation			Monitoring Data (From January 2008 To May 2012)		
		Average Monthly	Average Weekly	Maximum Daily	Highest Average Monthly Discharge	Highest Average Weekly Discharge	Highest Daily Discharge

[1] Based on an average dry weather flow of 0.71 MGD.
[2] Interim effluent limitation effective until 17 May 2010.
[3] Final effluent limitation effective 18 May 2010.
[4] Compliance with the final effluent limitations for aluminum can be demonstrated using either total or acid-soluble (inductively coupled plasma/atomic emission spectrometry or inductively coupled plasma/mass spectrometry analysis methods, as supported by USEPA's Ambient Water Quality Criteria for Aluminum document (EPA 440/5-86-008), or other standard methods that exclude aluminum silicate particles as approved by the Executive Officer.
[5] Floating ammonia effluent limitations based on pH and temperature and effective for the period beginning the effective date of the Order through 17 May 2010.
[6] Effluent limitation effective 18 May 2010 until 5 years following the date of adoption of the Order.
[7] Effluent limitation effective 5 years following the date of adoption of the Order.
[8] Applied as a 4-day average effluent limitation.
[9] Applied as a 1-hour average effluent limitation.
[10] Applied as an annual average effluent limitation.
[11] Represents the maximum observed annual average effluent concentration.
[12] The total monthly mass discharge of total mercury shall not exceed 0.0016 lbs/month.
[13] Not to be exceeded more than once in any 30-day period.
[14] Applied as a 7-day median effluent limitation.
[15] Applied as an instantaneous maximum.
[16] Applied as a daily average effluent limitation.
[17] Not to be exceeded more than 5% of the time within a 24-hour period.
[18] Not to be exceeded at any time.
[19] Survival of aquatic organisms in 96-hour bioassays shall be no less than 70%.
[20] The median for any three or more consecutive bioassays is 90%.
[21] Represents the minimum observed percent survival.

D. Compliance Summary

1. The Central Valley Regional Water Quality Control Board (Central Valley Water Board) issued Administrative Civil Liability (ACL) Complaint No. R5-2010-0531 on 1 July 2010 which proposed to assess an administrative civil liability of $147,000 against the Discharger for 49 effluent limitation violations for aluminum, chlorine residual, dichlorobromomethane, electrical conductivity, nitrate, total coliform organisms, and turbidity from 1 January 2008 through 31 December 2009. The Discharger paid a mandatory minimum penalty of $12,000 and agreed to complete a compliance project.

2. The Central Valley Water Board issued ACL Complaint No. R5-2012-0560 on 7 September 2012 which proposed to assess an administrative civil liability of $411,000 against the Discharger for 137 effluent limitation violations for ammonia, copper, cyanide, dichlrobromomethane, nitrate, total coliform organisms, turbidity, and zinc from 1 January 2010 and 31 May 2012. The Discharger agreed to complete a compliance project.

3. A compliance inspection of the Facility was conducted 29 May 2008. Major findings from the inspection include the following:

a. The Discharger has in the past relied on bypassing the tertiary filters in order to handle sustained high wastewater flow events. Attachment D, Standard Provision I.G.3 of Order R5-2007-0133-01 prohibits bypass of wastes to surface waters.

b. A sulfur dixoide tank was not labeled. Chlorine gas and sulfur dioxide gas cylinders should be labeled full or empty at all times.

c. Reports sent to the Central Valley Water Board Executive Officer for approval were not properly addressed.

d. Glass mercury thermometers in the automatic composite samplers needed to be calibrated and kept submerged to obtain accurate readings.

4. A compliance inspection of the Facility was conducted 6 May 2009. Major findings from the inspection include the following:

a. The Discharger reported incorrect values in the self-monitoring report for November 2008 for the 11 November 2008 ammonia and total coliform organisms samples.

b. Storm water is collected and discharged to Jackson Creek without any treatment. No structural best management practices were in place to reduce pollutants in storm water.

5. A compliance inspection of the Facility was conducted 9 May 2011. Major findings from the inspection include the following:

a. Reports were not signed by a duly authorized representative of the executive officer, as required by Attachment D, Standard Provision V.B.3 of Order R5-2007-0133-01.

b. Transmittal letters for the monthly self-monitoring reports (SMRs) did not include the certification statement required by Attachment D, Standard Provision IV.B.5 of Order R5-2007-0133-01.

c. The Discharger reported effluent limitation exceedances in the SMRs for the period of November 2010 through January 2011 for copper, cyanide, dichlorobromomethane, nitrate, total coliform organisms, and zinc.

d. The Discharger's laboratory is not certified by the State Water Board Division of Drinking Water's (DDW) Environmental Laboratory Accreditation Program (ELAP) and had not developed a Quality Assurance-Quality Control Program as required by Attachment E, Provision I.B of Order R5-2007-0133-01.

e. The Facility analyzes pH daily, but did not calibrate the pH meters on a daily basis as required by Attachment E, Provision I.D of Order R5-2007-0133-01.

6. The Central Valley Water Board adopted Time Schedule Order (TSO) R5-2011-0909 on 3 November 2011, which provides a time schedule for effluent limitations for

aluminum, copper, cyanide, dichlorobromomethane, nitrate, total coliform organisms, turbidity, and zinc. TSO R5-2011-0909 requires compliance with the final effluent limitations for these parameters by 1 March 2015.

E. Planned Changes

The Discharger proposed several major projects to improve the Discharger's treatment process, (e.g., conversion to UV disinfection from chlorination/dechlorination disinfection, addition of filter cells and improvements to coagulation/flocculation, addition of anoxic basins, and upgrades to pH control system) thereby improving effluent quality.

III. APPLICABLE PLANS, POLICIES, AND REGULATIONS

The requirements contained in this Order are based on the applicable plans, policies, and regulations identified in the Findings in section II of this Order. The applicable plans, policies, and regulations relevant to the discharge include the following:

A. Legal Authorities

This Order is issued pursuant to regulations in the Clean Water Act (CWA) and the California Water Code (Water Code) as specified in the Finding contained at section II.C of this Order.

B. California Environmental Quality Act (CEQA)

This Order meets the requirements of CEQA as specified in the Finding contained at section II.E of this Order.

C. State and Federal Regulations, Policies, and Plans

1. **Water Quality Control Plans.** This Order implements the following water quality control plans as specified in the Finding contained at section II.H of this Order.

   a. *Water Quality Control Plan, Fourth Edition (Revised October 2011), for the Sacramento and San Joaquin River Basins* (Basin Plan)

2. **National Toxics Rule (NTR) and California Toxics Rule (CTR).** This Order implements the NTR and CTR as specified in the Finding contained at section II.I of this Order.

3. **State Implementation Policy (SIP).** This Order implements the SIP as specified in the Finding contained at section II.J of this Order.

4. **Alaska Rule.** This Order is consistent with the Alaska Rule as specified in the Finding contained at section II.L of this Order.

5. **Antidegradation Policy.** As specified in the Finding contained at section II.N of this Order and as discussed in detail in the Fact Sheet (Attachment F, Section IV.D.4.),

the discharge is consistent with the antidegradation provisions of 40 CFR 131.12 and State Water Resources Control Board (State Water Board) Resolution 68-16.

6. **Anti-Backsliding Requirements.** This Order is consistent with anti-backsliding policies as specified in the Finding contained at section II.O of this Order. Compliance with the anti-backsliding requirements is discussed in the Fact Sheet (Attachment F, Section IV.D.3).

7. **Emergency Planning and Community Right to Know Act**

   Section 13263.6(a) of the Water Code, requires that "*the Regional Water Board shall prescribe effluent limitations as part of the waste discharge requirements of a POTW for all substances that the most recent toxic chemical release data reported to the state emergency response commission pursuant to Section 313 of the Emergency Planning and Community Right to Know Act of 1986 (42 U.S.C. Sec. 11023) (EPCRA) indicate as discharged into the POTW, for which the State Water Board or the Regional Water Board has established numeric water quality objectives, and has determined that the discharge is or may be discharged at a level which will cause, have the reasonable potential to cause, or contribute to, an excursion above any numeric water quality objective*".

   The most recent toxic chemical data report does not indicate any reportable off-site releases or discharges to the collection system for this Facility. Therefore, a reasonable potential analysis based on information from EPCRA cannot be conducted. Based on information from EPCRA, there is no reasonable potential to cause or contribute to an excursion above any numeric water quality objectives included within the Basin Plan or in any State Water Board plan, so no effluent limitations are included in this permit pursuant to Water Code section 13263.6(a).

   However, as detailed elsewhere in this Order, available effluent data indicate that there are constituents present in the effluent that have a reasonable potential to cause or contribute to exceedances of water quality standards and require inclusion of effluent limitations based on federal and state laws and regulations.

8. **Storm Water Requirements**

   USEPA promulgated federal regulations for storm water on 16 November 1990 in 40 CFR Parts 122, 123, and 124. The NPDES Industrial Storm Water Program regulates storm water discharges from wastewater treatment facilities. Wastewater treatment plants are applicable industries under the storm water program and are obligated to comply with the federal regulations. The State Water Board does not require wastewater treatment facilities with design flows less than 1 MGD to obtain coverage under the Industrial Storm Water General Order. This Order does not regulate storm water.

9. **Endangered Species Act.** This Order is consistent with the Endangered Species Act as specified in the Finding contained at section II.P of this Order.

D. Impaired Water Bodies on CWA 303(d) List

1. Under section 303(d) of the 1972 CWA, states, territories and authorized tribes are required to develop lists of water quality limited segments. The waters on these lists do not meet water quality standards, even after point sources of pollution have installed the minimum required levels of pollution control technology. On 12 November 2010 USEPA gave final approval to California's 2010 section 303(d) List of Water Quality Limited Segments. The Basin Plan references this list of Water Quality Limited Segments (WQLSs), which are defined as "…*those sections of lakes, streams, rivers or other fresh water bodies where water quality does not meet (or is not expected to meet) water quality standards even after the application of appropriate limitations for point sources* (40 CFR Part 130, et seq.)." The Basin Plan also states, "*Additional treatment beyond minimum federal standards will be imposed on dischargers to [WQLSs]. Dischargers will be assigned or allocated a maximum allowable load of critical pollutants so that water quality objectives can be met in the segment*." Jackson Creek is not listed as a WQLS on the 2010 303(d) list.

2. **Total Maximum Daily Loads (TMDLs).** USEPA requires the Central Valley Water Board to develop TMDLs for each 303(d) listed pollutant and water body combination. No TMDLs have been developed for Jackson Creek or Amador Lake.

3. The 303(d) listings and TMDLs have been considered in the development of the Order. A pollutant-by-pollutant evaluation of each pollutant of concern is described in section VI.C.3. of this Fact Sheet.

E. Other Plans, Policies and Regulations

1. The discharge authorized herein and the treatment and storage facilities associated with the discharge of treated municipal wastewater, except for discharges of residual sludge and solid waste, are exempt from the requirements of Title 27, California Code of Regulations (CCR), section 20005 *et seq* (hereafter Title 27). The exemption, pursuant to Title 27 CCR section 20090(a), is based on the following:

   a. The waste consists primarily of domestic sewage and treated effluent;

   b. The waste discharge requirements are consistent with water quality objectives; and

   c. The treatment and storage facilities described herein are associated with a municipal wastewater treatment plant.

IV. RATIONALE FOR EFFLUENT LIMITATIONS AND DISCHARGE SPECIFICATIONS

Effluent limitations and toxic and pretreatment effluent standards established pursuant to sections 301 (Effluent Limitations), 302 (Water Quality Related Effluent Limitations), 304 (Information and Guidelines), and 307 (Toxic and Pretreatment Effluent Standards) of the CWA and amendments thereto are applicable to the discharge.

The CWA mandates the implementation of effluent limitations that are as stringent as necessary to meet water quality standards established pursuant to state or federal law [33 U.S.C., §1311(b)(1)(C); 40 CFR 122.44(d)(1)]. NPDES permits must incorporate discharge limits necessary to ensure that water quality standards are met. This requirement applies to narrative criteria as well as to criteria specifying maximum amounts of particular pollutants. Pursuant to federal regulations, 40 CFR 122.44(d)(1)(i), NPDES permits must contain limits that control all pollutants that "*are or may be discharged at a level which will cause, have the reasonable potential to cause, or contribute to an excursion above any state water quality standard, including state narrative criteria for water quality*." Federal regulations, 40 CFR 122.44(d)(1)(vi), further provide that "[w]*here a state has not established a water quality criterion for a specific chemical pollutant that is present in an effluent at a concentration that causes, has the reasonable potential to cause, or contributes to an excursion above a narrative criterion within an applicable State water quality standard, the permitting authority must establish effluent limits*."

The CWA requires point source dischargers to control the amount of conventional, non-conventional, and toxic pollutants that are discharged into the waters of the United States. The control of pollutants discharged is established through effluent limitations and other requirements in NPDES permits. There are two principal bases for effluent limitations in the Code of Federal Regulations: 40 CFR 122.44(a) requires that permits include applicable technology-based limitations and standards; and 40 CFR 122.44(d) requires that permits include WQBELs to attain and maintain applicable numeric and narrative water quality criteria to protect the beneficial uses of the receiving water where numeric water quality objectives have not been established. The Basin Plan at page IV-17.00, contains an implementation policy, "*Policy for Application of Water Quality Objectives*", that specifies that the Central Valley Water Board "*will, on a case-by-case basis, adopt numerical limitations in orders which will implement the narrative objectives*." This Policy complies with 40 CFR 122.44(d)(1). With respect to narrative objectives, the Central Valley Water Board must establish effluent limitations using one or more of three specified sources, including: (1) USEPA's published water quality criteria, (2) a proposed state criterion (i.e., water quality objective) or an explicit state policy interpreting its narrative water quality criteria (i.e., the Central Valley Water Board's "*Policy for Application of Water Quality Objectives*")(40 CFR 122.44(d)(1)(vi)(A), (B) or (C)), or (3) an indicator parameter.

The Basin Plan includes numeric site-specific water quality objectives and narrative objectives for toxicity, chemical constituents, discoloration, radionuclides, and tastes and odors. The narrative toxicity objective states: "*All waters shall be maintained free of toxic substances in concentrations that produce detrimental physiological responses in human, plant, animal, or aquatic life*." (Basin Plan at III-8.00) The Basin Plan states that material and relevant information, including numeric criteria, and recommendations from other agencies and scientific literature will be utilized in evaluating compliance with the narrative toxicity objective. The narrative chemical constituents objective states that waters shall not contain chemical constituents in concentrations that adversely affect beneficial uses. At minimum, "…*water designated for use as domestic or municipal supply (MUN) shall not contain concentrations of chemical constituents in excess of the maximum contaminant levels (MCLs)" in Title 22 of CCR.* The Basin Plan further states that, to protect all beneficial uses, the Central Valley Water Board may apply limits more stringent than MCLs.

The narrative tastes and odors objective states: *"Water shall not contain taste- or odor-producing substances in concentrations that impart undesirable tastes or odors to domestic or municipal water supplies or to fish flesh or other edible products of aquatic origin, or that cause nuisance, or otherwise adversely affect beneficial uses*."

A. Discharge Prohibitions

1. **Prohibition III.A (No discharge or application of waste other than that described in this Order).** This prohibition is based on Water Code section 13260 that requires filing of a report of waste discharge (ROWD) before discharges can occur. The Discharger submitted a ROWD for the discharges described in this Order; therefore, discharges not described in this Order are prohibited.

2. **Prohibition III.B (No bypasses or overflow of untreated wastewater, except under the conditions at 40 CFR 122.41(m)(4)).** As stated in section I.G of Attachment D, Standard Provisions, this Order prohibits bypass from any portion of the treatment facility. Federal regulations, 40 CFR 122.41(m), define "bypass" as the intentional diversion of waste streams from any portion of a treatment facility. This section of the federal regulations, 40 CFR 122.41(m)(4), prohibits bypass unless it is unavoidable to prevent loss of life, personal injury, or severe property damage. In considering the Central Valley Water Board's prohibition of bypasses, the State Water Board adopted a precedential decision, Order No. WQO 2002-0015, which cites the federal regulations, 40 CFR 122.41(m), as allowing bypass only for essential maintenance to assure efficient operation.

3. **Prohibition III.C (No controllable condition shall create a nuisance).** This prohibition is based on Water Code section 13050 that requires water quality objectives established for the prevention of nuisance within a specific area. The Basin Plan prohibits conditions that create a nuisance.

4. **Prohibition III.D (No inclusion of pollutant free wastewater shall cause improper operation of the Facility's systems).** This prohibition is based on 40 CFR 122.41 et seq. that requires the proper design and operation of treatment facilities.

5. **Prohibition III.E (Maintain dilution ratio of 20:1 or greater in Lake Amador).** This prohibition is based on DDW recommendation that discharges from wastewater treatment plants to municipal water supplies maintain a minimum of 20:1 dilution to ensure the protection of the downstream domestic beneficial use of Jackson Creek and public health. Discharge Prohibition III.E prohibits the discharge of wastewater by the Discharger to Jackson Creek, when a minimum dilution of 20:1 is not provided by Lake Amador located downstream of the discharge location into Jackson Creek. This prohibition is in effect until DDW notifies the Central Valley Water Board that all customers have been provided an acceptable drinking water source that satisfies DDW.

B. Technology-Based Effluent Limitations

1. Scope and Authority

Section 301(b) of the CWA and implementing USEPA permit regulations at 40 CFR 122.44 require that permits include conditions meeting applicable technology-based requirements at a minimum, and any more stringent effluent limitations necessary to meet applicable water quality standards. The discharge authorized by this Order must meet minimum federal technology-based requirements based on Secondary Treatment Standards at 40 CFR Part 133.

Regulations promulgated in 40 CFR 125.3(a)(1) require technology-based effluent limitations for municipal Dischargers to be placed in NPDES permits based on Secondary Treatment Standards or Equivalent to Secondary Treatment Standards.

The Federal Water Pollution Control Act Amendments of 1972 (PL 92-500) established the minimum performance requirements for POTWs [defined in section 304(d)(1)]. Section 301(b)(1)(B) of that Act requires that such treatment works must, as a minimum, meet effluent limitations based on secondary treatment as defined by the USEPA Administrator.

Based on this statutory requirement, USEPA developed secondary treatment regulations, which are specified in 40 CFR Part 133. These technology-based regulations apply to all municipal wastewater treatment plants and identify the minimum level of effluent quality attainable by secondary treatment in terms of 5-day biochemical oxygen demand (BOD_5), total suspended solids (TSS), and pH.

2. Applicable Technology-Based Effluent Limitations

a. BOD_5 and TSS. Federal regulations, 40 CFR Part 133, establish the minimum weekly and monthly average level of effluent quality attainable by secondary treatment for BOD_5 and TSS. Tertiary treatment is necessary to protect the beneficial uses of the receiving stream and the final effluent limitations for BOD_5 and TSS are based on the technical capability of the tertiary process. BOD_5 is a measure of the amount of oxygen used in the biochemical oxidation of organic matter. The secondary and tertiary treatment standards for BOD_5 and TSS are indicators of the effectiveness of the treatment processes. The principal design parameter for wastewater treatment plants is the daily BOD_5 and TSS loading rates and the corresponding removal rate of the system. In applying 40 CFR Part 133 for weekly and monthly average BOD_5 and TSS limitations, the application of tertiary treatment processes results in the ability to achieve lower levels for BOD_5 and TSS than the secondary standards; the 30-day average BOD_5 and TSS limitations have been maintained at 10 mg/L, which is technically based on the capability of a tertiary system. In addition to the average weekly and average monthly effluent limitations, a daily maximum effluent limitation for BOD_5 and TSS is included in the Order to ensure that the treatment works are not organically overloaded and operate in accordance with design capabilities. In addition, 40 CFR 133.102, in describing the minimum level of effluent quality

attainable by secondary treatment, states that the 30-day average percent removal shall not be less than 85 percent. If 85 percent removal of BOD_5 and TSS must be achieved by a secondary treatment plant, it must also be achieved by a tertiary (i.e., treatment beyond secondary level) treatment plant. This Order contains a limitation requiring an average of 85 percent removal of BOD_5 and TSS over each calendar month. This Order requires Water Quality Based Effluent Limitations (WQBELs) that are equal to or more stringent than the secondary technology-based treatment described in 40 CFR Part 133. (See section IV.C.3.d of this Attachment for the discussion on Pathogens which includes WQBELs for BOD_5 and TSS.)

b. Flow. The Facility was designed to provide a tertiary level of treatment for up to a design flow of 0.71 MGD. Therefore, this Order contains an average dry weather discharge flow effluent limit of 0.71 MGD.

c. pH. The secondary treatment regulations at 40 CFR Part 133 also require that pH be maintained between 6.0 and 9.0 standard units.

Summary of Technology-based Effluent Limitations
Discharge Point No. 001

Table F-3. Summary of Technology-based Effluent Limitations

Parameter	Units	Effluent Limitations				
		Average Monthly	Average Weekly	Maximum Daily	Instantaneous Minimum	Instantaneous Maximum
Flow	MGD		--	0.71 ADWF	--	--
Biochemical Oxygen Demand (5-day @ 20°C)[1]	mg/L	30	45	--	--	--
	lbs/day[2]	178	266	--	--	--
	% Removal	85	--	--	--	--
pH[1]	standard units	--	--	--	6.0	9.0
Total Suspended Solids[1]	mg/L	30	45	--	--	--
	lbs/day[2]	178	266	--	--	--
	% Removal	85	--	--	--	--

1 Note that more stringent WQBELs for BOD_5, pH, and TSS are applicable and are established as final effluent limitations in this Order (see section IV.C.3.d of this Fact Sheet).

2 Based on the design average dry weather flow of 0.71MGD.

C. Water Quality-Based Effluent Limitations (WQBELs)

1. Scope and Authority

Section 301(b) of the CWA and 40 CFR 122.44(d) require that permits include limitations more stringent than applicable federal technology-based requirements where necessary to achieve applicable water quality standards. This Order contains requirements, expressed as a technology equivalence requirement, more stringent than secondary treatment requirements that are necessary to meet applicable water quality standards. The rationale for these requirements, which consist of tertiary

treatment or equivalent requirements, is discussed in section IV.C.3.d.viii of this Fact Sheet.

40 CFR 122.44(d)(1)(i) mandates that permits include effluent limitations for all pollutants that are or may be discharged at levels that have the reasonable potential to cause or contribute to an exceedance of a water quality standard, including numeric and narrative objectives within a standard. Where reasonable potential has been established for a pollutant, but there is no numeric criterion or objective for the pollutant, WQBELs must be established using: (1) USEPA criteria guidance under CWA section 304(a), supplemented where necessary by other relevant information; (2) an indicator parameter for the pollutant of concern; or (3) a calculated numeric water quality criterion, such as a proposed state criterion or policy interpreting the state's narrative criterion, supplemented with other relevant information, as provided in 40 CFR 122.44(d)(1)(vi).

The process for determining reasonable potential and calculating WQBELs when necessary is intended to protect the designated uses of the receiving water as specified in the Basin Plan, and achieve applicable water quality objectives and criteria that are contained in other state plans and policies, or any applicable water quality criteria contained in the CTR and NTR.

2. Applicable Beneficial Uses and Water Quality Criteria and Objectives

The Basin Plan designates beneficial uses, establishes water quality objectives, and contains implementation programs and policies to achieve those objectives for all waters addressed through the plan. In addition, the Basin Plan implements State Water Board Resolution No. 88-63, which established state policy that all waters, with certain exceptions, should be considered suitable or potentially suitable for municipal or domestic supply.

The Basin Plan on page II-1.00 states: "*Protection and enhancement of existing and potential beneficial uses are primary goals of water quality planning…*" and with respect to disposal of wastewaters states that "...*disposal of wastewaters is [not] a prohibited use of waters of the State; it is merely a use which cannot be satisfied to the detriment of beneficial uses.*"

The federal CWA section 101(a)(2), states: "*it is the national goal that wherever attainable, an interim goal of water quality which provides for the protection and propagation of fish, shellfish, and wildlife, and for recreation in and on the water be achieved by July 1, 1983.*" Federal Regulations, developed to implement the requirements of the CWA, create a rebuttable presumption that all waters be designated as fishable and swimmable. Federal Regulations, 40 CFR sections 131.2 and 131.10, require that all waters of the State regulated to protect the beneficial uses of public water supply, protection and propagation of fish, shell fish and wildlife, recreation in and on the water, agricultural, industrial and other purposes including navigation. Section 131.3(e), 40 CFR, defines existing beneficial uses as those uses actually attained after 28 November 1975, whether or not they are included in the water quality standards. Federal Regulation, 40 CFR section

131.10 requires that uses be obtained by implementing effluent limitations, requires that all downstream uses be protected and states that in no case shall a state adopt waste transport or waste assimilation as a beneficial use for any waters of the United States.

a. **Receiving Water and Beneficial Uses.** The Facility discharges treated wastewater to Jackson Creek, a water of the United States and a tributary to the Mokelumne River within the Sacramento-San Joaquin Delta via Amador Lake and Dry Creek.

   The Basin Plan at II-2.00 states that the beneficial uses of any specifically identified water body generally apply to its tributary streams. The Basin Plan in Table II-1, Section II, does not specifically identify beneficial uses for Jackson Creek, but does identify present and potential uses for the Sacramento-San Joaquin Delta, to which Jackson Creek, via Amador Lake, Dry Creek, and the Mokelumne River, is tributary. Thus, beneficial uses applicable to Jackson Creek are as follows:

Table F-4. Basin Plan Beneficial Uses

Discharge Point	Receiving Water Name	Beneficial Use(s)
001	Jackson Creek	Existing uses from Table II-1 of the Basin Plan: Municipal and domestic supply (MUN); Agricultural supply, including irrigation and stock watering (AGR); Industrial process supply (PROC); Industrial service supply (IND); Water contact recreation (REC-1); Non-contact water recreation (REC-2); Warm freshwater habitat (WARM); Cold freshwater habitat (COLD); Migration of aquatic organisms, warm and cold (MIGR); Spawning, reproduction, and/or early development, warm (SPWN); Wildlife habitat (WILD); and Navigation (NAV). Suitable uses from State Water Board Resolution No. 88-63: Municipal and domestic supply (MUN).

b. **Effluent and Ambient Background Data.** For most constituents, the reasonable potential analysis (RPA), as described in section IV.C.3 of this Fact Sheet, was based on data from January 2008 through May 2012, which includes effluent and ambient background data submitted in SMRs. The RPA for copper and zinc was based on the Discharger's completion of studies and upgrades to the Facility, and therefore representative data was used as described in sections IV.C.2 and IV.C.3, below.

c. **Assimilative Capacity/Mixing Zone.** Current flow data indicate that, at times, Jackson Creek is dominated by effluent water downstream of the discharge. Due to the uncertainty of upstream assimilative capacity and sufficient flow data as

described below, no dilution credits will be granted for the calculation of effluent limitations.

The Discharger has not submitted flow data or a mixing zone/dilution study requesting dilution credits. Thus, consistent with the assumptions used for Order R5-2007-0133-01, the worst-case dilution is assumed to be zero to provide protection for the receiving water beneficial uses. The impact of assuming zero assimilative capacity within the receiving water is that discharge limitations are applied end-of-pipe with no allowance for dilution within the receiving water.

d. Conversion Factors. The CTR contains aquatic life criteria for arsenic, cadmium, chromium III, chromium VI, copper, lead, nickel, silver, and zinc which are presented in dissolved concentrations. USEPA recommends conversion factors to translate dissolved concentrations to total concentrations. The default USEPA conversion factors contained in Appendix 3 of the SIP were used to convert the applicable dissolved criteria to total recoverable criteria.

e. Hardness-Dependent CTR Metals Criteria. The *California Toxics Rule* and the *National Toxics Rule* contain water quality criteria for seven metals that vary as a function of hardness. The lower the hardness the lower the water quality criteria. The metals with hardness-dependent criteria include cadmium, copper, chromium III, lead, nickel, silver, and zinc.

This Order has established the criteria for hardness-dependent metals based on the reasonable worst-case ambient hardness as required by the SIP[1] and the CTR[2]. The SIP and the CTR require the use of "receiving water" or "actual ambient" hardness, respectively, to determine effluent limitations for these metals. (SIP, § 1.2; 40 CFR § 131.38(c)(4)) The CTR requires that the hardness values used shall be consistent with the design discharge conditions for design flows and mixing zones.[3] Where design flows for aquatic life criteria include the lowest one-day flow with an average reoccurrence frequency of once in ten years (1Q10) and the lowest average seven consecutive day flow with an average reoccurrence frequency of once in ten years (7Q10).[4] The CTR also requires that when mixing zones are allowed the CTR criteria apply at the edge of the mixing zone, otherwise the criteria apply throughout the water body including at the point of discharge.[5] The CTR does not define whether the term "ambient," as applied in the regulations, necessarily requires the consideration of upstream as opposed to downstream hardness conditions.

---

[1] The SIP does not address how to determine the hardness for application to the equations for the protection of aquatic life when using hardness-dependent metals criteria. It simply states, in Section 1.2, that the criteria shall be properly adjusted for hardness using the hardness of the receiving water.

[2] The CTR requires that, for waters with a hardness of 400 mg/L (as $CaCO_3$), or less, the actual ambient hardness of the surface water must be used.

[3] 40 C.F.R. 131.38 § (c)(4)(ii)

[4] 40 C.F.R. 131.38 § (c)(4)(iii) Table 4

[5] 40 C.F.R. 131.38 § (c)(2)(i)

The State Water Board provided direction regarding the selection of hardness in two precedential water quality orders; WQO 2008-0008 (Davis Order) for the City of Davis Wastewater Treatment Plant and WQO 2004-0013 (Yuba City Order) for the Yuba City Wastewater Treatment Plant. The State Water Board recognized that the SIP and the CTR do not discuss the manner in which hardness is to be ascertained, thus regional water boards have considerable discretion in determining ambient hardness. (Davis Order, p.10). The State Water Board explained that it is necessary that, "The [hardness] value selected should provide protection for all times of discharge under varying hardness conditions." (Yuba City Order, p. 8). The Davis Order also provides that, "Regardless of the hardness used, the resulting limits must always be protective of water quality criteria under all flow conditions." (Davis Order, p. 11)

The equation describing the total recoverable regulatory criterion, as established in the CTR[1], is as follows:

$$\text{CTR Criterion} = \text{WER} \times (e^{m[\ln(H)]+b}) \quad \text{(Equation 1)}$$

Where:

H = ambient hardness (as $CaCO_3$)[2]

WER = water-effect ratio

m, b = metal- and criterion-specific constants

In accordance with the CTR, the default value for the WER is 1. A WER study must be conducted to use a value other than 1. As discussed in section IV.C.2.f and IV.C.3.b, the Discharger conducted a WER study for copper.

The upstream receiving water hardness ranged from 57 mg/L to 228 mg/L with a mean of 121 mg/L, based on 57 samples from 11 March 2008 to 10 June 2014. During the late summer months, Jackson Creek often runs dry upstream of the effluent discharge. Therefore, Jackson Creek is considered effluent dominated and the critical design low flow condition is when there is 100% effluent as the downstream ambient condition. The Discharger completed Facility upgrades in March 2014 that included an alkalinity adjustment system. The representative effluent monitoring data since this Facility upgrade indicated that effluent hardness varied from 75 mg/L to 125 mg/L, based on 5 samples from 10 June 2014 to 11 August 2014.

For calculating the CTR criteria, as described above the effluent hardness is used as the downstream ambient hardness. The SIP, CTR, and State Water Board do not require use of the minimum observed ambient hardness in the CTR equations. The hardness used must be consistent with design conditions and protective of water quality criteria under all flow conditions. Therefore, the minimum effluent hardness of 75 mg/L represents the downstream ambient

[1] 40 CFR § 131.38(b)(2).
[2] For this discussion all hardness values are measured as $CaCO_3$.

hardness under the design condition and was considered for use in the CTR equations.

A downstream ambient hardness of 75 mg/L results in CTR criteria that are protective of aquatic life under all flow conditions for cadmium (acute and chronic), chromium III, copper, nickel, silver, and zinc.

The Facility discharges both hardness and metals, which must be considered in the downstream ambient receiving water to ensure the criteria are protective under all flow conditions. The tables below examine how the downstream ambient conditions change with varying mixtures of effluent and upstream receiving water. The calculations determine whether or not toxicity could result from one or more metals using the selected design ambient hardness to calculate the CTR criteria.

A simple mass balance (Equation 2) is used to model the ambient concentrations of hardness and metals in the receiving water downstream of the discharge for all possible mixtures of effluent and upstream receiving water under all flow conditions.

$$C_{downstream} = C_{upstream} \times (1\text{-}MIX) + C_{effluent} \times (MIX) \quad \text{(Equation 2)}$$ [1]

Where:

$C_{downstream}$ = Downstream receiving water concentration

$C_{upstream}$ = Upstream receiving water concentration

$C_{effluent}$ = Effluent concentration

MIX = Fraction of effluent in downstream ambient receiving water

For each of several downstream ambient mixtures of upstream receiving water and effluent, the potential for toxicity is examined. The hardness of the mixture is calculated, and the resultant water quality criterion is calculated from the CTR equation. The metals concentration is also calculated for the mixture of upstream receiving water and effluent. If the metals concentration complies with the CTR criterion for that mixture, the ambient mixture is not toxic, and “Yes” is indicated in the far right column. If the metals concentration exceeds the CTR criterion for that mixture, the ambient concentration is toxic, and “No” is indicated in the far right column. The results of these evaluations are summarized in Table F-13.

For this evaluation the following conservative assumptions have been made:

- Upstream receiving water at the lowest observed upstream receiving water hardness (i.e., 57 mg/L)

[1] USEPA NPDES Permit Writers’ Manual, September 2010 (EPA-833-K-10-001)

- No assimilative capacity for each metal in the upstream receiving water (i.e., metals concentration equal to CTR criteria calculated using a hardness of 75 mg/L).
- Effluent hardness at the lowest observed effluent hardness of 75 mg/L

The following tables (F-5 through F-12) demonstrate that the selected design ambient hardness used to calculate the CTR criteria result in protective criteria for all flow conditions (i.e., the mixed downstream ambient metals concentrations do not exceed the CTR criteria). Table F-13 summarizes the design ambient hardness for each metal.

Table F-5. Lead Evaluation (Design Ambient Hardness = 75 mg/L)

Assumed Upstream Receiving Water Lead Concentration					**1.56 µg/L[1]**
				Lead Chronic Criterion[2]	**2.21 µg/L**
Mix[6]		**Mixed Downstream Ambient Concentration**			**Complies with CTR Criteria**
		Hardness [3] (mg/L)	**CTR Criteria [4] (µg/L)**	**Lead [5] (µg/L)**	
High Flow	1%	57.2	1.6	1.6	**Yes**
	5%	57.9	1.6	1.6	**Yes**
	15%	59.7	1.6	1.6	**Yes**
	25%	61.5	1.7	1.7	**Yes**
	50%	66.0	1.9	1.9	**Yes**
	75%	70.5	2.0	2.0	**Yes**
Low Flow	100%	75	2.2	2.2	**Yes**

Table F-6. Copper Evaluation (Design Ambient Hardness = 75 mg/L)

Assumed Upstream Receiving Water Copper Concentration					**5.8 µg/L[1]**
				Copper Chronic Criterion[2]	**7.3 µg/L**
Mix[6]		**Mixed Downstream Ambient Concentration**			**Complies with CTR Criteria**
		Hardness [3] (mg/L)	**CTR Criteria [4] (µg/L)**	**Copper [5] (µg/L)**	
High Flow	1%	57.2	5.8	5.8	**Yes**
	5%	57.9	5.8	5.8	**Yes**
	15%	59.7	6.0	6.0	**Yes**
	25%	61.5	6.2	6.2	**Yes**
	50%	66.0	6.5	6.5	**Yes**
	75%	70.5	6.9	6.9	**Yes**
Low Flow	100%	75	7.3	7.3	**Yes**

Table F-7. Chromium III Evaluation (Design Ambient Hardness = 75 mg/L)

Assumed Upstream Receiving Water Chromium III Concentration					130.6 µg/L[1]
				Chromium III Chronic Criterion[2]	163.5 µg/L
Mix[6]		Mixed Downstream Ambient Concentration			Complies with CTR Criteria
		Hardness [3] (mg/L)	CTR Criteria [4] (µg/L)	Chromium III [5] (µg/L)	
High Flow	1%	57.2	131.0	130.9	Yes
	5%	57.9	132.3	132.3	Yes
	15%	59.7	135.7	135.6	Yes
	25%	61.5	139.0	138.8	Yes
	50%	66.0	147.3	147.1	Yes
Low Flow	75%	70.5	155.5	155.3	Yes
	100%	75	163.5	163.5	Yes

Table F-8. Cadmium (Chronic) Evaluation (Design Ambient Hardness = 75 mg/L)

Assumed Upstream Receiving Water Cadmium Concentration					1.6 µg/L[1]
				Cadmium Chronic Criterion[2]	2.0 µg/L
Mix[6]		Mixed Downstream Ambient Concentration			Complies with CTR Criteria
		Hardness [3] (mg/L)	CTR Criteria [4] (µg/L)	Cadmium [5] (µg/L)	
High Flow	1%	57.2	1.6	1.6	Yes
	5%	57.9	1.6	1.6	Yes
	15%	59.7	1.6	1.6	Yes
	25%	61.5	1.7	1.7	Yes
	50%	66.0	1.8	1.8	Yes
Low Flow	75%	70.5	1.9	1.9	Yes
	100%	75	2.0	2.0	Yes

Table F-9. Cadmium (Acute) Evaluation (Design Ambient Hardness = 75 mg/L)

Assumed Upstream Receiving Water Cadmium Concentration					2.4 µg/L[1]
				Cadmium Acute Criterion[2]	3.27 µg/L
Mix[6]		Mixed Downstream Ambient Concentration			Complies with CTR Criteria
		Hardness [3] (mg/L)	CTR Criteria [4] (µg/L)	Cadmium [5] (µg/L)	
High Flow	1%	57.2	2.4	2.4	Yes
	5%	57.9	2.4	2.4	Yes
	15%	59.7	2.5	2.5	Yes
	25%	61.5	2.6	2.6	Yes
	50%	66.0	2.8	2.8	Yes
Low Flow	75%	70.5	3.0	3.0	Yes
	100%	75	3.3	3.3	Yes

Table F-10. Nickel Evaluation (Design Ambient Hardness = 75 mg/L)

Assumed Upstream Receiving Water Nickel Concentration					32.4 µg/L[1]
Nickel Chronic Criterion[2]					40.9 µg/L
Mix[6]		Mixed Downstream Ambient Concentration			Complies with CTR Criteria
		Hardness [3] (mg/L)	CTR Criteria [4] (µg/L)	Nickel [5] (µg/L)	
High Flow	1%	57.2	32.5	32.5	Yes
	5%	57.9	32.9	32.8	Yes
	15%	59.7	33.7	33.7	Yes
	25%	61.5	34.6	34.5	Yes
	50%	66.0	36.7	36.7	Yes
	75%	70.5	38.8	38.8	Yes
Low Flow	100%	75	40.9	40.9	Yes

Table F-11. Silver (Acute) Evaluation (Design Ambient Hardness = 75 mg/L)

Assumed Upstream Receiving Water Silver Concentration					1.5 µg/L[1]
Silver Acute Criterion[2]					2.5 µg/L
Mix[6]		Mixed Downstream Ambient Concentration			Complies with CTR Criteria
		Hardness [3] (mg/L)	CTR Criteria [4] (µg/L)	Silver [5] (µg/L)	
High Flow	1%	57.2	1.6	1.6	Yes
	5%	57.9	1.6	1.6	Yes
	15%	59.7	1.7	1.7	Yes
	25%	61.5	1.8	1.8	Yes
	50%	66.0	2.0	2.0	Yes
	75%	70.5	2.2	2.2	Yes
Low Flow	100%	75	2.5	2.5	Yes

Table F-12. Zinc Evaluation (Design Ambient Hardness = 75 mg/L)

Assumed Upstream Receiving Water Zinc Concentration					74.4 µg/L[1]
Zinc Chronic Criterion[2]					93.9 µg/L
Mix[6]		Mixed Downstream Ambient Concentration			Complies with CTR Criteria
		Hardness [3] (mg/L)	CTR Criteria [4] (µg/L)	Zinc [5] (µg/L)	
High Flow	1%	57.2	74.6	74.6	Yes
	5%	57.9	75.4	75.4	Yes
	15%	59.7	77.4	77.3	Yes
	25%	61.5	79.4	79.3	Yes
	50%	66.0	84.3	84.2	Yes
	75%	70.5	89.1	89.0	Yes
Low Flow	100%	75	93.9	93.9	Yes

Footnotes for CTR Hardness-dependent Metals Tables (F-5 through F-12)

[1] Highest assumed upstream receiving water metals concentration calculated using CTR equation (Equation 1) for chronic/ acute criterion at a hardness of **57 mg/L**.

[2] CTR Criteria calculated using CTR equation (Equation 1) for chronic/acute criterion at the design ambient hardness for the particular metal (see Table F-13).

[3] Mixed downstream ambient hardness is the mixture of the receiving water and effluent hardness at the applicable mixture using Equation 2.

[4] Mixed downstream ambient criteria are the chronic/acute criteria calculated using the CTR equation (Equation 1) at the mixed hardness.

[5] Mixed downstream ambient metals concentration is the mixture of the receiving water and effluent metals concentrations at the applicable mixture using Equation 2.

[6] The mixture percentage represents the fraction of effluent in the downstream ambient receiving water. The mixture ranges from 1% at the high receiving water flow condition, to 100% at the lowest receiving water flow condition (i.e., effluent dominated).

The applicable design ambient hardness and CTR criteria for the hardness-dependent metals for which toxicity in ambient waters does not occur are as follows in Table F-13.

Table F-13. Summary of Design Ambient Hardness and CTR Criteria for Hardness-dependent Metals

CTR Metals	Design Ambient Hardness (mg/L)	CTR Criteria (µg/L, total recoverable)[1]	
		acute	chronic
Copper	75	11	7.3
Chromium III	75	1400	160
Cadmium (acute and chronic)	75	3.3	2.0
Lead	75	57	2.2
Nickel	75	370	41
Silver	75	2.5	--
Zinc	75	94	94

[1] Metal criteria rounded to two significant figures in accordance with the CTR.

f. Water Effect Ratio

i. Copper. The Discharger submitted a *Copper Water-Effect Ratio Study* (Stantec) dated 26 September 2014. The Discharger's study followed USEPA's *2001 Streamlined Water-Effect Ratio Procedure for Discharges of Copper* (EPA 822 R-01-005). Following the streamlined procedure, two separate sets of samples were evaluated on June 2014 and July 2014 to assess ambient conditions and to calculate a freshwater copper WER using the primary test species, *Ceriodaphnia dubia*. Consistent with the streamlined procedure, the Discharger used the geometric mean of the two sample WERs to calculate final site-specific WERs for dissolved copper. Based on the results of the study, the Discharger concluded that a dissolved

WER for copper of 6.37, based on effluent data to represent low-flow, zero-dilution discharge conditions, is applicable to the discharge to Jackson Creek.

Based on review of the Discharger's study, the Central Valley Water Board concludes that a WER is applicable to the discharge to Jackson Creek. The Discharger followed appropriate procedure to determine the proposed WER for copper of 6.37. However, the Central Valley Water Board finds that implementing a copper WER value of greater than 5.0 would require additional assessment of the fate of copper in the receiving environment and the effects to resident biota, which is beyond the scope of the Streamlined WER Procedure. Therefore, the Central Valley Water Board concludes that a copper WER of 5.0 is appropriate and is sufficient for the Discharger to comply with the copper criteria. See section IV.C.3.b.ii of this Fact Sheet for a discussion of the RPA for copper.

3. Determining the Need for WQBELs

a. The Central Valley Water Board conducted the RPA in accordance with section 1.3 of the SIP. Although the SIP applies directly to the control of CTR priority pollutants, the State Water Board has held that the Regional Water Boards may use the SIP as guidance for water quality-based toxics control.[1] The SIP states in the introduction "*The goal of this Policy is to establish a standardized approach for permitting discharges of toxic pollutants to non-ocean surface waters in a manner that promotes statewide consistency*." Therefore, in this Order the RPA procedures from the SIP were used to evaluate reasonable potential for both CTR and non-CTR constituents based on information submitted as part of the application, in studies, and as directed by monitoring and reporting programs.

b. Constituents with No Reasonable Potential. WQBELs are not included in this Order for constituents that do not demonstrate reasonable potential (i.e., constituents were not detected in the effluent or receiving water); however, monitoring for those pollutants is established in this Order as required by the SIP. If the results of effluent monitoring demonstrate reasonable potential, this Order may be reopened and modified by adding an appropriate effluent limitation.

Most constituents with no reasonable potential are not discussed in this order. However, the following constituents were found to have no reasonable potential after assessment of the data:

i. Aluminum

Aluminum is the third most abundant element in the earth's crust and is ubiquitous in both soils and aquatic sediments. When mobilized in surface waters, aluminum has been shown to be toxic to various fish species. However, the potential for aluminum toxicity in surface waters is directly

[1] See Order WQO 2001-16 (Napa) and Order WQO 2004-0013 (Yuba City).

related to the chemical form of aluminum present, and the chemical form is highly dependent on water quality characteristics that ultimately determine the mechanism of aluminum toxicity. Surface water characteristics, including pH, temperature, colloidal material, fluoride and sulfate concentrations, and total organic carbon, all influence aluminum speciation and its subsequent bioavailability to aquatic life. Calcium [hardness] concentrations in surface water may also reduce aluminum toxicity by competing with monomeric aluminum (Al^{3+}) binding to negatively charged fish gills.

(a) WQO. The Code of Federal Regulations promulgated criteria for priority toxic pollutants for California's surface waters as part of section 131.38 Establishment of Numeric Criteria for Priority Toxic Pollutants for the State of California (California Toxics Rule or CTR), including metals criteria. However, aluminum criteria were not promulgated as part of the CTR. Absent numeric aquatic life criteria for aluminum, WQBEL's in the Central Valley Region's NPDES permits are based on the Basin Plans' narrative toxicity objective. The Basin Plans' *Policy for Application of Water Quality Objectives* requires the Central Valley Water Board to consider, "*on a case-by-case basis, direct evidence of beneficial use impacts, all material and relevant information submitted by the discharger and other interested parties, and relevant numerical criteria and guidelines developed and/or published by other agencies and organizations. In considering such criteria, the Board evaluates whether the specific numerical criteria which are available through these sources and through other information supplied to the Board, are relevant and appropriate to the situation at hand and, therefore, should be used in determining compliance with the narrative objective*." Relevant information includes, but is not limited to (1) USEPA National Ambient Water Quality Criteria (NAWQC) and subsequent Correction, (2) site-specific conditions of Jackson Creek, the receiving water, and (3) site-specific aluminum studies conducted by dischargers within the Central Valley Region. (Basin Plan, p. IV.-17.00; see also, 40 CFR 122.44(d)(vi).)

USEPA NAWQC*.* USEPA recommended the NAWQC aluminum chronic criterion at 87 µg/L based upon the following two toxicity tests. All tests were conducted in water that contained pH range of 6.0 to 6.6 and hardness at 12 mg/L as $CaCO_3$.

(1) Acute toxicity tests at various aluminum doses were conducted in various acidic waters (pH 6.0 – 6.5) on 159- and 160-day old striped bass. The 159-day old striped bass showed no mortality in waters with pH at 6.5 and aluminum doses at 390 µg/L, and the 160-day old striped bass showed 58% mortality at a dose of 174.4 µg/L in same pH waters. However, the 160-day old striped bass showed 98% mortality at an aluminum dose of 87.2 µg/L in waters with pH at 6.0, which is USEPA's basis for the 87 µg/L chronic criterion. The varied results draw into question this study and the applicability of the NAWQC chronic criterion of 87 µg/L.

(2) Chronic toxicity effects on 60-day old brook trout were evaluated in circumneutral pH waters (6.5-6.9 pH) in five cells at various aluminum doses (4, 57, 88, 169, and 350 µg/L). Chronic evaluation started upon hatching of eyed eggs of brook trout, and their weight and length were measured after 45 days and 60 days. The 60-day old brook trout showed 24% weight loss at 169 µg/L of aluminum and 4% weight loss at 88 µg/L of aluminum, which is the basis for USEPA's chronic criteria. Though this test study shows chronic toxic effects of a 4% reduction in weight after exposure for 60-days, the chronic criterion is based on 4-day exposure; so again, the applicability of the NAWQC chronic criterion of 87 µg/L is questionable.

Site-specific Conditions. Effluent and Jackson Creek monitoring data indicate that the pH and hardness values are not similar to the low pH and hardness conditions under which the chronic criterion for aluminum was developed, as shown in the table below, and therefore, the Central Valley Water Board does not expect aluminum to be as reactive in Jackson Creek as in the previously described toxicity tests. The pH of Jackson Creek, the receiving water, ranged from 6.6 to 8.1 with an average of 7.4 based on 882 monitoring results obtained between January 2008 and May 2012. These water conditions are circumneutral pH where aluminum is predominately in the form of $Al(OH)_3$ and non-toxic to aquatic life. The hardness of Jackson Creek ranged from 81 mg/L to 228 mg/L based on 48 samples, which is above the conditions, and thus less toxic, than the tests used to develop the chronic criterion. Jackson Creek supports aquatic species such as steelhead (rainbow trout).

Parameter	Units	Test Conditions for Applicability of Chronic Criterion	Effluent	Jackson Creek
pH	standard units	6.0 – 6.5	6.1 – 7.9	6.6 – 8.1
Hardness, Total (as $CaCO_3$)	mg/L	12	42 – 107	81 – 228
Aluminum, Total Recoverable	µg/L	87.2 – 390	20 – 360	N/A

Local Environmental Conditions and Studies. Twenty-one site-specific aluminum toxicity tests have been conducted within the Central Valley Region. The pH and hardness of Jackson Creek are similar, as shown in the table below, and thus the results of these site-specific aluminum toxicity tests is relevant and appropriate for Jackson Creek. As shown in the following table, all EC_{50} toxicity study result values are at concentrations of aluminum above 5,000 µg/L. Thus, the toxic effects of aluminum in surface waters within the Central Valley Region, including Jackson Creek, is less toxic (or less reactive) to aquatic species than demonstrated in the toxicity tests that USEPA used for the basis of establishing the chronic criterion of 87 µg/L. This new information, and review of the toxicity tests USEPA used to establish the chronic criterion, indicates that 87 µg/L is overly stringent and not applicable to Jackson Creek.

Central Valley Region Site-Specific Toxicity Data

Discharger (City)	Species	Test Waters	Hardness Value	Total Aluminum EC_{50} Value	pH	WER
Auburn	***Ceriodaphnia dubia***	**Effluent**	**99**	**>5270**	**7.44**	**>19.3**
	“ “	**Surface Water**	**16**	**>5160**	**7.44**	**>12.4**
Manteca	“ “	Surface Water/Effluent	124	>8800	9.14	N/C
	“ “	Effluent	117	>8700	7.21	>27.8
	“ “	Surface Water	57	7823	7.58	25.0
	“ “	Effluent	139	>9500	7.97	>21.2
	“ “	Surface Water	104	>11000	8.28	>24.5
	“ “	Effluent	128	>9700	7.78	>25.0
	“ “	Surface Water	85	>9450	7.85	>25.7
	“ “	Effluent	106	>11900	7.66	>15.3
	“ “	Surface Water	146	>10650	7.81	>13.7
Modesto	“ “	Surface Water/Effluent	120/156	31604	8.96	211
Yuba City	“ “	Surface Water/Effluent	114/164[1]	>8000	7.60/7.46	>53.5
Placer County	“ “	Effluent	150	>5000	7.4 – 8.7	>13.7
Manteca	*Daphnia magna*	Surface Water/Effluent	124	>8350	9.14	N/C
Modesto	“ “	Surface Water/Effluent	120/156	>11900	8.96	>79.6
Yuba City	“ “	Surface Water/Effluent	114/164[1]	>8000	7.60/7.46	>53.5
Manteca	*Oncorhynchus mykiss* (rainbow trout)	Surface Water/Effluent	124	>8600	9.14	N/C
Auburn	**“ “**	**Surface Water**	**16**	**>16500**	**7.44**	**N/C**
Modesto	“ “	Surface Water/Effluent	120/156	>34250	8.96	>229
Yuba City	“ “	Surface Water/Effluent	114/164[1]	>8000	7.60/7.46	>53.5

[1] Hardness values may be biased high because the EDTA titrimetic method is subject to interferences that measure as hardness (barium, cadmium, lead, manganese, strontium, and zinc will be measured as hardness) producing hardness numbers that are likely to be greater than the calculation of hardness based upon the ICP analysis of calcium and magnesium. Upstream receiving water hardness ranged from 30 to 50.9 mg/L as $CaCO_3$ between January 2008 and August 2011. Furthermore, the upstream receiving water hardness was 37 mg/L as $CaCO_3$ on 4 October 2005, 7 days prior to the Feasibility Assessment (first phase of a Water Effects Ratio study) sample collection date of 11 October 2005. It is likely that matrix interferences from other metals were responsible for the unexpected hardness values reported by Pacific EcoRisk.

The Discharger has not conducted a toxicity test for aluminum; however, the City of Auburn conducted two toxicity tests in Auburn Ravine, shown highlighted in the previous table. The City of Auburn and the City of Jackson facilities are approximately 45 miles apart, and are both located in the foothills surrounding the Sacramento Valley at similar elevations. As shown, the test water quality characteristics of Auburn Ravine are critically lower than Jackson Creek, with the pH at 7.4 and hardness at 16 mg/L as $CaCO_3$ in comparison to the mean pH at 7.4 and the mean hardness at 124 mg/L as $CaCO_3$, respectively. Thus results of site-specific studies conducted on Auburn Ravine would represent conservative assumptions for Jackson Creek since Jackson Creek’s water quality characteristics (pH and hardness) are higher, and therefore, aluminum is less toxic to aquatic life in Jackson Creek. Thus, based on these two similar primary water quality characteristics (pH and hardness) that drive aluminum speciation, the aluminum toxicity within Auburn Ravine is expected to be similar in Jackson Creek. Therefore, the Auburn Ravine

aluminum toxicity test study is relevant and appropriate in this case for use in determining the specific numerical criteria to be used in determining compliance with the Basin Plan's narrative toxicity objective. The Auburn Ravine aluminum toxicity study resulted in a site-specific aluminum objective at 1,079 µg/L. Thus, these results support the conclusion that the 87 µg/L chronic criterion is overly stringent for Jackson Creek.

DDW has established Secondary MCLs to assist public drinking water systems in managing their drinking water for aesthetic conditions such as taste, color, and odor. The Secondary MCL for aluminum is 200 µg/L. USEPA has also adopted an NAWQC acute criterion of 750 µg/L for the protection of aquatic life.

(b) RPA Results. Secondary MCLs are drinking water standards contained in Title 22 of the California Code of Regulations. Title 22 requires compliance with these standards on an annual average basis, when sampling at least quarterly. Aluminum is not a priority pollutant and the RPA procedures in section 1.3 of the SIP are not required. To be consistent with how compliance with the standards is determined, the RPA was conducted based on the calendar annual average aluminum concentrations. The maximum observed annual average effluent concentration for aluminum was 84 µg/L, based on 54 effluent samples collected between January 2008 and May 2012, and of these same 54 samples the MEC was 360 µg/L. Upstream receiving water data for aluminum is not available. Therefore, aluminum in the discharge does not demonstrate reasonable potential to cause or contribute to an in-stream excursion above the Secondary MCL of 200 µg/L or the NAWQC acute aquatic life criterion of 750 µg/L, and the effluent limitations for aluminum have not been retained in this Order. Removal of these effluent limitations is in accordance with federal anti-backsliding regulations (see section IV.D.3 of the Fact Sheet).

ii. Copper

(a) WQO. The CTR includes hardness dependent criteria for the protection of freshwater aquatic life for copper. These criteria for copper are presented in dissolved concentrations. USEPA recommends conversion factors to translate dissolved concentrations to total concentrations. Default USEPA translators were used in this Order. Using the CTR default WER value of 1, the acute and chronic criteria for copper is 11 µg/L and 7.3 µg/L, respectively. USEPA also allows the use of the *2001 Streamlined Water-Effect Ratio Procedure for Discharges of Copper* (EPA 822-R-01-005) to determine a site-specific WER value and calculate site-specific criteria. The Discharger followed the EPA procedure and calculated a site-specific WER (see section IV.C.2.f of this Fact Sheet). Therefore, using the site-specific WER of 5 to adjust the criteria, the new site-specific acute and chronic criteria for copper is 54 µg/L and 37 µg/L, respectively.

(b) RPA Results. Section IV.C.2 of this Fact Sheet includes procedures for conducting the RPA for copper. The maximum observed upstream receiving water copper concentration was 1.8 µg/L based on four samples collected between January 2008 and October 2014 (MDL 0.1 µg/L, RL 0.5 µg/L). The MEC for copper (total recoverable) was 13 µg/L based on 84 samples collected between January 2008 and October 2014. Neither the maximum receiving water concentration nor the MEC for copper exceed the applicable site-specific criterion. Therefore, the discharge does not demonstrate reasonable potential to cause or contribute to an in-stream excursion above the site-specific criteria. Therefore, the effluent limitations for copper contained in Order R5-2013-0146 have not been retained in this amended Order. Removal of these effluent limitations is in accordance with federal anti-backsliding regulations (see section IV.D.3 of the Fact Sheet).

iii. Diazinon

(a) WQO. Order R5-2007-0133-01 established effluent limitations based on DFG acute (1-hour average) and chronic (4-day average) criteria of 0.08 µg/L and 0.05 µg/L to implement the Basin Plan's narrative toxicity objective. The acute and chronic criteria of 0.08 µg/L and 0.05 µg/L published in 2000[1] were calculated using questionable *Gammarus fasciatus* toxicity test results. DFG recalculated the diazinon criteria to exclude the questionable toxicity test values for *Gammarus fasciatus* in 2004[2]. The recalculated DFG acute and chronic criteria for diazinon are 0.16 µg/L and 0.10 µg/L, respectively. The Central Valley Water Board confirmed these recalculated values in Appendix D of the *Basin Plan Amendments to the Water Quality Control Plan for the Sacramento River and San Joaquin River Basins for the Control of Diazinon and Chlorpyrifos Runoff into the Sacramento and Feather Rivers, May 2007 Final Staff Report*. Thus, the applicable acute and chronic criteria to implement the Basin Plan's narrative toxicity objective for diazinon are 0.16 µg/L and 0.10 µg/L, respectively.

(b) RPA Results. Diazinon was detected, but not quantified, in the effluent in two out of 53 samples collected between January 2008 and May 2012 (minimum method detection limit (MDL) 0.01 µg/L, minimum reporting level (RL) 0.05 µg/L). All other effluent samples were non-detect. The maximum estimated effluent concentration was 0.099 µg/L. Upstream receiving water data for diazinon is not available. Therefore, diazinon in

[1] Siepmann, S, and B.J. Finlayson. 2000. Water quality criteria for diazinon and chlorpyrifos. California Department of Fish and Game. Office of Spill Prevention and Response Administrative Report 00-3. Sacramento, CA.

[2] Finlayson, B. 2004. Memo from Brian Finlayson, Chief, Pesticide Investigations Unit, California Department of Fish and Game. Re: Water Quality for Diazinon. 30 July 2004.

the discharge does not demonstrate reasonable potential to cause or contribute to an in-stream excursion above the Basin Plan's narrative toxicity objective, and the effluent limitations for diazinon have not been retained in this Order. Removal of these effluent limitations is in accordance with federal anti-backsliding regulations (see section IV.D.3 of the Fact Sheet).

iv. Iron

(a) WQO. The Secondary MCL – Consumer Acceptance Limit for iron is 300 µg/L, which is used to implement the Basin Plan's chemical constituent objective for the protection of municipal and domestic supply. Order R5-2007-0133-01 included an effluent limitation for iron based on the Secondary MCL.

(b) RPA Results. Secondary MCLs are drinking water standards contained in Title 22 of the California Code of Regulations. Title 22 requires compliance with these standards on an annual average basis, when sampling at least quarterly. Iron is not a priority pollutant and the RPA procedures in section 1.3 of the SIP are not required. To be consistent with how compliance with the standards is determined, the RPA was conducted based on the calendar annual average effluent iron concentrations. The maximum observed annual average effluent concentration for iron was 108 µg/L (minimum MDL 20 µg/L, minimum RL 20 µg/L) based on 54 samples collected between January 2008 and May 2012. Therefore, iron in the discharge does not demonstrate reasonable potential to cause or contribute to an in-stream excursion above the Secondary MCL of 300 µg/L and the effluent limitation for iron has not been retained in this Order. Removal of this effluent limitation is in accordance with federal anti-backsliding regulations (see section IV.D.3 of the Fact Sheet).

v. Manganese

(a) WQO. The Secondary MCL – Consumer Acceptance Limit for manganese is 50 µg/L, which is used to implement the Basin Plan's chemical constituent objective for the protection of municipal and domestic supply. Order R5-2007-0133-01 included an effluent limitation for manganese based on the Secondary MCL.

(b) RPA Results. Secondary MCLs are drinking water standards contained in Title 22 of the California Code of Regulations. Title 22 requires compliance with these standards on an annual average basis, when sampling at least quarterly. Manganese is not a priority pollutant and the RPA procedures in section 1.3 of the SIP are not required. To be consistent with how compliance with the standards is determined, the RPA was conducted based on the calendar annual average effluent manganese concentrations. The maximum observed annual average

effluent concentration for manganese was 32 µg/L (minimum MDL 1 µg/L, minimum RL 5 µg/L) based on 54 samples collected between January 2008 and May 2012. Therefore, manganese in the discharge does not demonstrate reasonable potential to cause or contribute to an in-stream excursion above the Secondary MCL of 50 µg/L and the effluent limitation for manganese has not been retained in this Order. Removal of this effluent limitation is in accordance with federal anti-backsliding regulations (see section IV.D.3 of the Fact Sheet).

vi. Salinity

(a) WQO. The Basin Plan contains a chemical constituent objective that incorporates state MCLs, contains a narrative objective, and contains numeric water quality objectives for certain specified water bodies for electrical conductivity, total dissolved solids, sulfate, and chloride. The USEPA Ambient Water Quality Criteria for Chloride recommends acute and chronic criteria for the protection of aquatic life. There are no USEPA water quality criteria for the protection of aquatic life for electrical conductivity, total dissolved solids, sulfate, and chloride. Additionally, there are no USEPA numeric water quality criteria for the protection of agricultural, livestock, and industrial uses. Numeric values for the protection of these uses are typically based on site specific conditions and evaluations to determine the appropriate constituent threshold necessary to interpret the narrative chemical constituent Basin Plan objective.

Table F-14. Salinity Water Quality Criteria/Objectives

Parameter	Secondary MCL[3]	USEPA NAWQC	Effluent	
			Average	Maximum
Electrical Conductivity (µmhos/cm)	900, 1600, 2200	N/A	461	729
Total Dissolved Solids (mg/L)	500, 1000, 1500	N/A	298	411
Sulfate (mg/L)	250, 500, 600	N/A	N/A	N/A
Chloride (mg/L)	250, 500, 600	860 1-hr 230 4-day	N/A	N/A

[1] Narrative chemical constituent objective of the Basin Plan. Procedures for establishing the applicable numeric limitation to implement the narrative objective can be found in the *Policy for Application of Water Quality*, Chapter IV, Section 8 of the Basin Plan. However, the Basin Plan does not require improvement over naturally occurring background concentrations. In cases where the natural background concentration of a particular constituent exceeds an applicable water quality objective, the natural background concentration will be considered to comply with the objective.

[3] The Secondary MCLs are stated as a recommended level, upper level, and a short-term maximum level.

(1) Chloride. The Secondary MCL for chloride is 250 mg/L, as a recommended level, 500 mg/L as an upper level, and 600 mg/L as a short-term maximum.

The Central Valley Water Board is currently implementing the CV-SALTS initiative to develop a Basin Plan Amendment that will establish a salt and nitrate Management Plan for the Central Valley. Through this effort the Basin Plan will be amended to define how the

narrative water quality objective is to be interpreted for the protection of agricultural use. All studies conducted through this Order to establish an agricultural limit to implement the narrative objective will be reviewed by and consistent with the efforts currently underway by CV-SALTS.

(2) Electrical Conductivity. The Secondary MCL for electrical conductivity is 900 µmhos/cm as a recommended level, 1600 µmhos/cm as an upper level, and 2200 µmhos/cm as a short-term maximum.

The Central Valley Water Board is currently implementing the CV-SALTS initiative to develop a Basin Plan Amendment that will establish a salt and nitrate Management Plan for the Central Valley. Through this effort the Basin Plan will be amended to define how the narrative water quality objective is to be interpreted for the protection of agricultural use. All studies conducted through this Order to establish an agricultural limit to implement the narrative objective will be reviewed by and consistent with the efforts currently underway by CV-SALTS

(3) Sulfate. The Secondary MCL for sulfate is 250 mg/L as a recommended level, 500 mg/L as an upper level, and 600 mg/L as a short-term maximum.

(4) Total Dissolved Solids. The Secondary MCL for total dissolved solids is 500 mg/L as a recommended level, 1000 mg/L as an upper level, and 1500 mg/L as a short-term maximum.

The Central Valley Water Board is currently implementing the CV-SALTS initiative to develop a Basin Plan Amendment that will establish a salt and nitrate Management Plan for the Central Valley. Through this effort the Basin Plan will be amended to define how the narrative water quality objective is to be interpreted for the protection of agricultural use. All studies conducted through this Order to establish an agricultural limit to implement the narrative objective will be reviewed by and consistent with the efforts currently underway by CV-SALTS.

(b) RPA Results

(1) Chloride. Effluent and upstream receiving water data for chloride is not available.

(2) Electrical Conductivity. A review of the Discharger's monitoring reports shows an average effluent electrical conductivity of 461 µmhos/cm, with a range from 287 µmhos/cm to 729 µmhos/cm based on 474 samples collected between January 2008 and

May 2012. These levels do not exceed the Secondary MCL. The background receiving water EC averaged 270 µmhos/cm based on 451 samples collected between January 2008 and May 2012.

(3) Sulfate. Effluent and upstream receiving water data for sulfate is not available.

(4) Total Dissolved Solids. The average total dissolved solids effluent concentration was 299 mg/L with concentrations ranging from 224 mg/L to 411 mg/L based on 17 samples collected between January 2008 and May 2012. These levels do not exceed the Secondary MCL. Upstream receiving water data for total dissolved solids is not available.

Order R5-2007-0133-01 included a performance-based annual average effluent limitation of 500 µmhos/cm. Based on the relatively low reported salinity, the discharge does not have reasonable potential to cause or contribute to an in-stream excursion of water quality objectives for salinity, and the WQBEL for electrical conductivity has not been retained in this Order. Removal of this effluent limitation is in accordance with federal anti-backsliding regulations (see section IV.D.3 of the Fact Sheet).

vii. Settleable Solids

(a) WQO. For inland surface waters, the Basin Plan states that "[w]*ater shall not contain substances in concentrations that result in the deposition of material that causes nuisance or adversely affects beneficial uses.*" Order R5-2007-0133-01 established an average monthly effluent limitation (AMEL) of 0.1 ml/L and a maximum daily effluent limitation (MDEL) of 0.2 ml/L for settleable solids to implement the narrative settleable solids objective.

(b) RPA Results. Settleable solids were not detected in the effluent based on 456 samples collected between January 2008 and May 2012. Because settleable solids have not been detected in the effluent and because the Discharger provides tertiary treatment, the discharge from the Facility does not have reasonable potential to cause or contribute to an excursion above the Basin Plan's narrative objective for settleable solids and the effluent limitations for settleable solids have not been retained in this Order. Removal of these effluent limitations is in accordance with federal antibacksliding regulations (see section IV.D.3 of the Fact Sheet).

viii. Silver

(a) WQO. The CTR includes a hardness-dependent criterion for the protection of freshwater aquatic life for silver. This criterion for silver is presented in dissolved concentration. USEPA recommends conversion factors to translate dissolved concentrations to total concentrations. The

default USEPA translator was used in this Order. Order R5-2007-0133-01 included effluent limitations for silver based on the CTR acute aquatic life criterion.

(b) RPA Results. Section IV.C.2.e includes procedures for conducting the RPA for silver. Silver was not detected in the upstream receiving water based on four samples collected between January 2008 and August 2014 (minimum MDL 0.1 µg/L, minimum RL 1 µg/L). Based on the updated lowest observed upstream receiving water hardness of 57 mg/L (as $CaCO_3$) the updated applicable total recoverable acute criterion for evaluating the ambient background concentration is 1.6 µg/L. Based on this data, the maximum assumed ambient background silver concentration does not exceed the applicable CTR criterion.

As discussed in Section IV.C.2.e for comparing the MEC to the criterion, the reasonable worst-case downstream ambient hardness should be used. Based on the reasonable worst-case downstream hardness, the updated applicable total recoverable acute criterion is 2.5 µg/L. Silver was not detected in the effluent based on four samples collected between January 2008 and August 2014 (minimum MDL 0.19 µg/L, minimum RL 1 µg/L). Based on this data, the MEC does not exceed the CTR criterion.

Order R5-2007-0133-01 included effluent limitations for silver based on the CTR hardness dependent criteria for the protection of freshwater aquatic life. The MEC for silver and the maximum calculated ambient background for silver do not exceed the applicable criterion. Therefore, the discharge does not demonstrate reasonable potential to cause or contribute to an in-stream excursion above the CTR criteria. Therefore, the effluent limitations for silver have not been retained in this Order. Removal of these effluent limitations is in accordance with federal anti-backsliding regulations (see section IV.D.3 of the Fact Sheet).

ix. Tetrachloroethylene

(a) WQO. The CTR includes a criterion of 0.8 µg/L for tetrachloroethylene for the protection of human health for waters from which both water and organisms are consumed. Order R5-2007-0133-01 included effluent limitations for tetrachloroethylene based on the CTR human health criterion.

(b) RPA Results. Tetrachloroethylene was not detected in the effluent based on 54 samples collected between January 2008 and May 2012 (minimum MDL 0.1 µg/L, minimum RL 0.5 µg/L). Tetrachloroethylene was not detected in the upstream receiving water based on four samples collected between January 2008 and May 2012 (minimum MDL 0.17 µg/L, minimum RL 0.5 µg/L). Therefore, tetrachloroethylene in the discharge does not demonstrate reasonable potential to cause or contribute to an in-stream excursion above the CTR human health criterion and the effluent

limitations for tetrachloroethylene have not been retained in this Order. Removal of these effluent limitations is in accordance with federal anti-backsliding regulations (see section IV.D.3 of the Fact Sheet).

x. Zinc

(a) WQO. The CTR includes hardness dependent criteria for the protection of freshwater aquatic life for zinc. These criteria for zinc are presented in dissolved concentrations. USEPA recommends conversion factors to translate dissolved concentrations to total concentrations. Default USEPA translators were used in this Order. Using the default conversion factors and reasonable worst-case measured hardness as described in section IV.C.2.e, the applicable acute (1-hour average) and chronic (4-day average) criterion for the effluent are both 94 µg/L.

(b) RPA Results. Section IV.C.2.e of this Fact Sheet includes procedures for conducting the RPA for zinc. The Discharger identified zinc in the water supply as a major contributor to zinc in the effluent discharge. The Amador Water Agency, the water purveyor, historically used zinc orthophosphate as a corrosion control agent in the water supply, however, the Amador Water Agency discontinued adding zinc orthophosphate to their system in May 2012. It takes several months for the zinc orthophosphate to flush from the system and a significant reduction of zinc in the effluent discharge has been the result.

The maximum observed upstream receiving water zinc concentration was 12 µg/L (MDL 1 µg/L, RL 1 µg/L). The MEC for zinc (total recoverable) was 86 µg/L, based on 24 samples collected by the Discharger between November 2012 and October 2014. Neither the maximum receiving water concentration nor the MEC for zinc exceed the applicable CTR criterion. Therefore, the discharge does not demonstrate reasonable potential to cause or contribute to an in-stream excursion above the CTR criteria. Therefore, the effluent limitations for zinc contained in Order R5-2013-0146 have not been retained in this amended Order. Removal of these effluent limitations is in accordance with federal anti-backsliding regulations (see section IV.D.3 of the Fact Sheet).

xi. 2,6-Dinitrotoluene

(a) WQO. 2,6-Dinitrotoluene is a priority pollutant; however, CTR criteria for 2,6-dinitrotoluene have not been developed. Order R5-2007-0133-01 established effluent limitations for 2,6-dinitrotoluene based on the USEPA Integrated Risk Information System (IRIS) and USEPA suggested no-adverse-response level (SNARL) for one-in-a-million incremental cancer risk estimates for drinking water of 0.05 µg/L.

(b) RPA Results. 2,6-Dinitrotoluene was not detected in the effluent out of 54 samples collected between January 2008 and May 2012 (minimum MDL 0.36 µg/L, minimum RL 1 µg/L). 2,6-Dinitrotoluene was not detected in the upstream receiving water based on four samples collected between January 2008 and May 2012 (MDL 1.9 µg/L, RL 5 µg/L). Therefore, 2,6-dinitrotoluene in the discharge does not demonstrate reasonable potential to cause or contribute to an in-stream excursion above the USEPA IRIS and USEPA SNARL for one-in-a-million incremental cancer risk estimates for drinking water and the effluent limitations for 2,6-dinitrotoluene have not been retained in this Order. Removal of these effluent limitations is in accordance with federal anti-backsliding regulations (see section IV.D.3 of the Fact Sheet).

c. Constituents with Insufficient or Limited Data. Reasonable potential cannot be determined for the following constituents because effluent and receiving water data are limited or insufficient. The Discharger is required to continue to monitor for these constituents in the effluent using analytical methods that provide the best feasible detection limits. When additional data become available, further analysis will be conducted to determine whether to add numeric effluent limitations or to continue monitoring.

i. Carbon Tetrachloride

(a) WQO. The CTR includes a criterion of 0.25 µg/L for carbon tetrachloride for the protection of human health for waters from which both water and organisms are consumed.

(b) RPA Results. Carbon tetrachloride was detected, but not quantified, in the effluent in two out of five samples collected between January 2008 and May 2012, as shown in the table below. Carbon tetrachloride was not detected in the upstream receiving water based on four samples collected between January 2008 and May 2012 (MDL 0.15 µg/L, RL 0.5 µg/L).

Table F-15. Carbon Tetrachloride Effluent Data

Date	Effluent Carbon Tetrachloride Concentration (µg/L)	MDL (µg/L)	RL (µg/L)	SIP ML (µg/L)
10 February 2010 (grab)	ND	0.15	0.5	0.5
10 February 2010 (composite)	ND	0.15	0.5	0.5
11 May 2010	ND	0.15	0.5	0.5
10 August 2010	0.28 (J)	0.15	0.5	0.5
9 November 2010	0.22 (J)	0.15	0.5	0.5

The SIP Section 2.4.2 states that the minimum level (ML) is the lowest quantifiable concentration in a sample based on the proper application of all method-based analytical procedures and the absence of any matrix interferences. The SIP further defines the Estimated Chemical Concentration as "*the estimated chemical concentration that results from the confirmed detection of the substance by the analytical method below the ML value.*"

Estimated chemical concentrations (J-Flags) may not be valid due to possible matrix interferences during the analytical procedure. These analytical results are not sufficient to determine whether the discharge demonstrates reasonable potential to cause or contribute to an instream excursion above the applicable water quality criterion/objective.

(1) SIP Section 1.2 states that the Central Valley Water Board has the discretion to consider if any data are inappropriate or insufficient for use in implementing the SIP.

(2) Therefore, in accordance with Section 1.2 of the SIP, the Central Valley Board has determined that data reported below the ML is inappropriate and insufficient to be used in the RPA.

In implementing its discretion, the Central Valley Water Board is not finding that carbon tetrachloride does not exhibit reasonable potential to cause or contribute to an exceedance of a water quality criterion; rather the Central Valley Water Board cannot make such a determination given the data is insufficient to determine whether concentrations in the effluent exceed the water quality criterion for carbon tetrachloride or not.

Section 1.3, Step 8 of the SIP allows the Central Valley Water Board to require additional monitoring for a pollutant in place of an effluent limitation if data are unavailable or insufficient. Therefore, the Central Valley Water Board will require additional monitoring for such constituents until such time a determination can be made in accordance with the SIP policy. Instead of limitations, additional monitoring has been established for carbon tetrachloride. Should monitoring results indicate that the discharge has the reasonable potential to cause or contribute to an exceedance of a water quality standard, this Order may be reopened and modified by adding an appropriate effluent limitation.

ii. 1,2-Diphenylhydrazine

(a) WQO. The CTR includes a criterion of 0.040 µg/L for 1,2-diphenylhydrazine for the protection of human health for waters from which both water and organisms are consumed. Order R5-2007-0133-01 included effluent limitations for 1,2-diphenylhydrazine based on the CTR human health criterion.

(b) RPA Results. 1,2-Diphenylhydrazine was detected, but not quantified, in the effluent in 4 out of 53 samples collected between January 2008 and May 2012, as shown in the graph below (minimum MDL 0.1 µg/L, minimum RL 1 µg/L). 1,2-Diphenylhdrazine was not detected in the upstream receiving water based on four samples collected between January 2008 and May 2012 (MDL 1 µg/L, RL 1 µg/L).

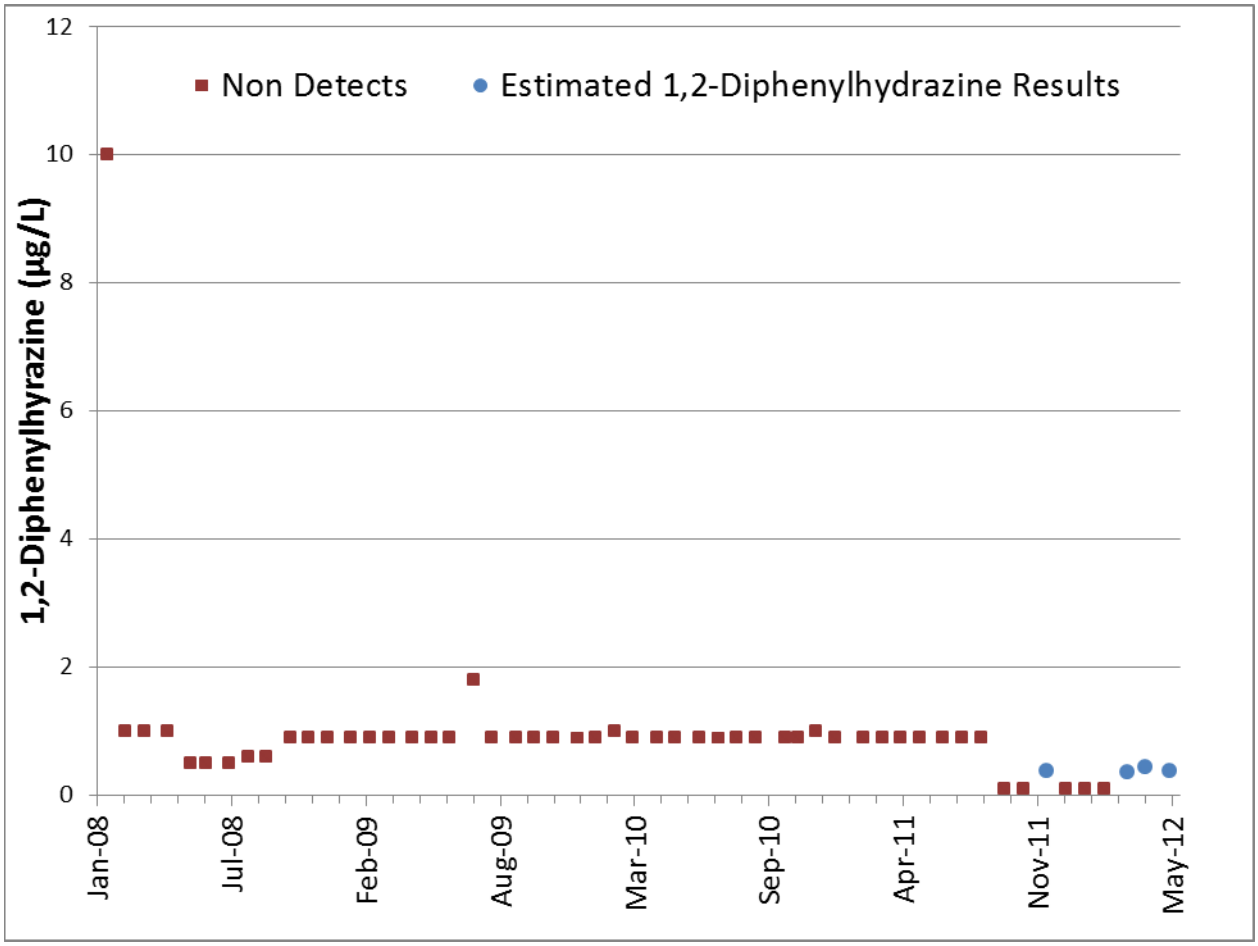

The SIP Section 2.4.2 states that the ML is the lowest quantifiable concentration in a sample based on the proper application of all method-based analytical procedures and the absence of any matrix interferences. The SIP further defines the Estimated Chemical Concentration as "*the estimated chemical concentration that results from the confirmed detection of the substance by the analytical method below the ML value.*"

Estimated chemical concentrations (J-Flags) may not be valid due to possible matrix interferences during the analytical procedure. These analytical results are not sufficient to determine whether the discharge demonstrates reasonable potential to cause or contribute to an instream excursion above the applicable water quality criterion/objective.

(1) SIP Section 1.2 states that the Central Valley Water Board has the discretion to consider if any data are inappropriate or insufficient for use in implementing the SIP.

(2) Therefore, in accordance with Section 1.2 of the SIP, the Central Valley Board has determined that data reported below the ML is inappropriate and insufficient to be used in the RPA.

In implementing its discretion, the Central Valley Water Board is not finding that 1,2-diphenylhydrazine does not exhibit reasonable potential to cause or contribute to an exceedance of a water quality criterion; rather the Central Valley Water Board cannot make such a determination given data is insufficient to determine whether concentrations in the effluent exceed the water quality criterion for 1,2-diphenylhydrazine or not.

Section 1.3, Step 8 of the SIP allows the Central Valley Water Board to require additional monitoring for a pollutant in place of an effluent limitation if data are unavailable or insufficient. Therefore, the Central Valley Water Board will require additional monitoring for such constituents until such time a determination can be made in accordance with the SIP policy. Instead of limitations, additional monitoring has been established for 1,2-diphenylhydrazine. Should monitoring results indicate that the discharge has the reasonable potential to cause or contribute to an exceedance of a water quality standard, this Order may be reopened and modified by adding an appropriate effluent limitation.

iii. Bis (2-Ethylhexyl) Phthalate

(a) WQO. The CTR includes a criterion of 1.8 µg/L for bis (2-ethylhexyl) phthalate for the protection of human health for waters from which both water and organisms are consumed.

(b) RPA Results. The MEC for bis (2-ethylhexyl) phthalate was 8.1 µg/L based on four samples collected between February 2010 and November 2010 (MDL 2.3 µg/L, RL 5 µg/L), as part of year three quarterly priority pollutant sampling requirement. The Discharger believed the analytical results from the 2010 sampling events were in error because there are no plastics manufacturing or any other known uses of plastic that enter the wastewater collection system. The Discharger collected an additional sample on 25 July 2011 and submitted it to PHYSIS Environmental Laboratory, Inc. instead of Sierra Foothill Laboratory, which subcontracted the analysis to E. S. Babcock & Sons, Inc. PHYSIS Environmental Laboratory specializes in analyzing for trace levels of organics at very low detection levels and avoiding contamination of samples during the analytical process (bis (2-ethylhexyl) phthalate is a common laboratory contaminant). The analytical result from the 25 July 2011 sample shown in the following table was below the bis (2-ethylhexyl) phthalate criterion of 1.8 µg/L.

Table F-16. Bis (2-Ethylhexyl) Phthalate Effluent Data

Date	Analytical Laboratory	Effluent Concentration (µg/L)	Blank #1	Blank #2	MDL (µg/L)	RL (µg/L)
10 February 2010	Babcock	< 2.3	<10	< 5	5.0	2.3
11 May 2010	Babcock	< 2.3	<10	< 5	5.0	2.3
10 August 2010	Babcock	8.1	<10	< 5	5.0	2.3
9 November 2010	Babcock	3.6 (J)	<10	< 5	5.0	2.3

Date	Analytical Laboratory	Effluent Concentration (µg/L)	Blank #1	Blank #2	MDL (µg/L)	RL (µg/L)
25 July 2011	PHYSIS	0.058	0.01354	--	0.02	0.01

Without additional data supporting the presence of laboratory contamination from the Babcock analytical results the Central Valley Water Board cannot conclude if reasonable potential is or is not exhibited by the discharge. The Discharger, in their 8 March 2013 memorandum to the Central Valley Water Board titled *RE: City of Jackson, Preliminary Draft NPDES Order Review*, stated that, "the City intends to use PHYSIS (or equal) for all future analyses of bis (2-ethylhexyl) phthalate." The Central Valley Water Board is in agreement with the Discharger that PHYSIS Environmental Laboratory or an equivalent laboratory should be used for all future bis (2-ethylhexyl) phthalate analytical samples.

The SIP Section 2.4.2 states that the ML is the lowest quantifiable concentration in a sample based on the proper application of all method-based analytical procedures and the absence of any matrix interferences. The SIP further defines the Estimated Chemical Concentration as "*the estimated chemical concentration that results from the confirmed detection of the substance by the analytical method below the ML value.*"

The bis (2-ethylhexyl) phthalate analytical results are not sufficient to determine whether the discharge demonstrates reasonable potential to cause or contribute to an instream excursion above the applicable water quality criterion/objective.

(1) SIP Section 1.2 states that the Central Valley Water Board has the discretion to consider if any data are inappropriate or insufficient for use in implementing the SIP.

(2) Therefore, in accordance with Section 1.2 of the SIP, the Central Valley Board has determined that conflicting analytical results are inappropriate and insufficient to be used in the RPA.

In implementing its discretion, the Central Valley Water Board is not finding that bis (2-ethylhexyl) phthalate does not exhibit reasonable potential to cause or contribute to an exceedance of a water quality criterion; rather the Central Valley Water Board cannot make such a determination given data is insufficient to determine whether concentrations in the effluent exceed the water quality criterion for bis (2-ethylhexyl) phthalate or not.

Section 1.3, Step 8 of the SIP allows the Central Valley Water Board to require additional monitoring for a pollutant in place of an effluent limitation if data are unavailable or insufficient. Therefore, the Central Valley Water Board will require additional monitoring for such constituents until such

time a determination can be made in accordance with the SIP policy. Instead of limitations, additional monitoring has been established for bis (2-ethylhexyl) phthalate. Should monitoring results indicate that the discharge has the reasonable potential to cause or contribute to an exceedance of a water quality standard, this Order may be reopened and modified by adding an appropriate effluent limitation.

d. Constituents with Reasonable Potential. The Central Valley Water Board finds that the discharge has a reasonable potential to cause or contribute to an in-stream excursion above a water quality standard for ammonia, BOD_5, chlorine residual, chlorodibromomethane, cyanide, dichlorobromomethane, mercury, nitrate plus nitrite, pH, total coliform organisms, total trihalomethanes, and TSS. WQBELs for these constituents are included in this Order. A summary of the RPA is provided in Attachment G, and a detailed discussion of the RPA for each constituent is provided below.

i. Ammonia

(a) WQO. The NAWQC for the protection of freshwater aquatic life for total ammonia, recommends acute (1-hour average; criteria maximum concentration or CMC) standards based on pH and chronic (30-day average; criteria continuous concentration or CCC) standards based on pH and temperature. USEPA also recommends that no 4-day average concentration should exceed 2.5 times the 30-day CCC. USEPA found that as pH increased, both the acute and chronic toxicity of ammonia increased. Salmonids were more sensitive to acute toxicity effects than other species. However, while the acute toxicity of ammonia was not influenced by temperature, it was found that invertebrates and young fish experienced increasing chronic toxicity effects with increasing temperature. Because Jackson Creek has a beneficial use of cold freshwater habitat and the presence of salmonids and early fish life stages in Jackson Creek is well-documented, the recommended criteria for waters where salmonids and early life stages are present were used.

The Basin Plan objective for pH in the receiving stream is the range of 6.5 to 8.5. Order R5-2007-0133-01 included a more stringent instantaneous maximum pH limitation of 8.0 based on a 30 July 2007 request from the Discharger. Data collected over the term of Order R5-2007-0133-01 indicate that pH in the effluent was consistently below 8.0. Therefore, consistent with Order R5-2007-0133-01, this Order establishes a more stringent instantaneous maximum pH limitation of 8.0. In order to protect against the worst-case short-term exposure of an organism, the permitted instantaneous maximum pH limitation of 8.0 was used to derive the acute criterion. The resulting acute criterion is 5.62 mg/L.

A chronic criterion was calculated for each day when paired temperature and pH were measured using receiving water data for temperature and pH recorded from the Discharger's SMRs from January 2008 through

May 2012. Rolling 30-day average criteria were calculated from downstream receiving water data using the criteria calculated for each day and the minimum observed 30-day average criterion was established as the applicable 30-day average chronic criterion, or 30-day CCC. The resulting 30-day CCC is 2.05 mg/L (as N). The 4-day average concentration is derived in accordance with the USEPA criterion as 2.5 times the 30-day CCC. Based on the 30-day CCC of 2.05 mg/L (as N), the 4-day average concentration that should not be exceeded is 6.88 mg/L (as N)

(b) RPA Results. Federal regulations at 40 C.F.R. §122.44(d)(1)(i) requires that, "*Limitations must control all pollutants or pollutant parameters (either conventional, nonconventional, or toxic pollutants) which the Director determines are or may be discharged at a level which will cause, have the reasonable potential to cause, or contribute to an excursion above any State water quality standard, including State narrative criteria for water quality.*" For priority pollutants, the SIP dictates the procedures for conducting the RPA. Ammonia is not a priority pollutant. Therefore, the Central Valley Water Board is not restricted to one particular RPA method. Due to the site-specific conditions of the discharge, the Central Valley Water Board has used professional judgment in determining the appropriate method for conducting the RPA for this non-priority pollutant constituent.

USEPA's September 2010 NPDES Permit Writer's Manual, page 6-30, states, "*State implementation procedures might allow, or even require, a permit writer to determine reasonable potential through a qualitative assessment process without using available facility-specific effluent monitoring data or when such data are not available…A permitting authority might also determine that WQBELs are required for specific pollutants for all facilities that exhibit certain operational or discharge characteristics (e.g., WQBELs for pathogens in all permits for POTWs discharging to contact recreational waters).*" USEPA's TSD also recommends that factors other than effluent data should be considered in the RPA, "*When determining whether or not a discharge causes, has the reasonable potential to cause, or contributes to an excursion of a numeric or narrative water quality criterion for individual toxicants or for toxicity, the regulatory authority can use a variety of factors and information where facility-specific effluent monitoring data are unavailable. These factors also should be considered with available effluent monitoring data.*" With regard to POTWs, USPEA recommends that, "*POTWs should also be characterized for the possibility of chlorine and ammonia problems.*" (TSD, p. 50)

The Facility is a POTW that treats domestic wastewater. Untreated domestic wastewater contains ammonia. Nitrification is a biological process that converts ammonia to nitrite and nitrite to nitrate.

Denitrification is a process that converts nitrate to nitrite or nitric oxide and then to nitrous oxide or nitrogen gas, which is then released to the atmosphere. The Discharger currently uses nitrification to remove ammonia from the waste stream. Inadequate or incomplete nitrification may result in the discharge of ammonia to the receiving stream. Ammonia is known to cause toxicity to aquatic organisms in surface waters. Discharges of ammonia in concentrations that produce detrimental physiological responses to human, plant, animal, or aquatic life would violate the Basin Plan narrative toxicity objective. Although the Discharger nitrifies the discharge, inadequate or incomplete nitrification creates the potential for ammonia to be discharged and provides the basis for the discharge to have a reasonable potential to cause or contribute to an in-stream excursion above the NAWQC. Therefore, the Central Valley Water Board finds the discharge has reasonable potential for ammonia and WQBELs are required.

The maximum effluent concentration for ammonia was 10 mg/L based on 1,361 samples collected between January 2008 and May 2012. The maximum observed upstream receiving water ammonia concentration was 3.2 mg/L based on 219 samples collected between January 2008 and May 2012.

(c) WQBELs. Applying 40 CFR section 122.44(d)(1)(vi)(B), effluent limitations for ammonia are included in this Order and are based on U.S. EPA's Ambient Water Quality Criteria for the protection of the beneficial use of freshwater aquatic habitat. This Order contains a final AMEL and MDEL for ammonia of 2.3 mg/L and 5.5 mg/L, respectively, based on the Basin Plan's narrative toxicity objective.

(d) Plant Performance and Attainability. Analysis of the effluent data shows that the maximum effluent concentration of 10 mg/L is greater than applicable WQBELs. TSO R5-2011-0909 provides a compliance schedule to achieve compliance with the final effluent limitations for ammonia by 1 March 2015, and was amended to reference this Order.

ii. Chlorine Residual

(a) WQO. USEPA developed NAWQC for protection of freshwater aquatic life for chlorine residual. The recommended 4-day average (chronic) and 1-hour average (acute) criteria for chlorine residual are 0.011 mg/L and 0.019 mg/L, respectively. These criteria are protective of the Basin Plan's narrative toxicity objective.

(b) RPA Results. The concentrations of chlorine used to disinfect wastewater are high enough to harm aquatic life and violate the Basin Plan's narrative toxicity objective if discharged to the receiving water. Reasonable potential therefore exists and WQBELs are required.

Federal regulations at 40 C.F.R. §122.44(d)(1)(i) requires that, "*Limitations must control all pollutants or pollutant parameters (either conventional, nonconventional, or toxic pollutants) which the Director determines are or may be discharged at a level which will cause, have the reasonable potential to cause, or contribute to an excursion above any State water quality standard, including State narrative criteria for water quality.*" For priority pollutants, the SIP dictates the procedures for conducting the RPA. Chlorine is not a priority pollutant. Therefore, the Central Valley Water Board is not restricted to one particular RPA method. Due to the site-specific conditions of the discharge, the Central Valley Water Board has used its judgment in determining the appropriate method for conducting the RPA for this non-priority pollutant constituent.

USEPA's September 2010 NPDES Permit Writer's Manual, page 6-30, states, "*State implementation procedures might allow, or even require, a permit writer to determine reasonable potential through a qualitative assessment process without using available facility-specific effluent monitoring data or when such data are not available…A permitting authority might also determine that WQBELs are required for specific pollutants for all facilities that exhibit certain operational or discharge characteristics (e.g., WQBELs for pathogens in all permits for POTWs discharging to contact recreational waters).*" USEPA's TSD also recommends that factors other than effluent data should be considered in the RPA, "*When determining whether or not a discharge causes, has the reasonable potential to cause, or contributes to an excursion of a numeric or narrative water quality criterion for individual toxicants or for toxicity, the regulatory authority can use a variety of factors and information where facility-specific effluent monitoring data are unavailable. These factors also should be considered with available effluent monitoring data.*" With regard to POTWs, USEPA recommends that, "*POTWs should also be characterized for the possibility of chlorine and ammonia problems.*" (TSD, p. 50)

The Discharger uses chlorine for disinfection, which is extremely toxic to aquatic organisms. Although the Discharger uses a sulfur dioxide process to dechlorinate the effluent prior to discharge to Jackson Creek, the existing chlorine use and the potential for chlorine to be discharged provides the basis for the discharge to have a reasonable potential to cause or contribute to an in-stream excursion above the NAWQC.

(c) WQBELs. The USEPA *Technical Support Document for Water Quality-Based Toxics Control* [EPA/505/2-90-001] contains statistical methods for converting chronic (4-day) and acute (1-hour) aquatic life criteria to average monthly and maximum daily effluent limitations based on the variability of the existing data and the expected frequency of monitoring. However, because chlorine is an acutely toxic constituent that can and will be monitored continuously, an average 1-hour limitation is considered

more appropriate than an average daily limitation. Consistent with Order R5-2007-0133-01, this Order contains a 4-day average effluent limitation and 1-hour average effluent limitation for chlorine residual of 0.011 mg/L and 0.019 mg/L, respectively, based on USEPA's NAWQC, which implements the Basin Plan's narrative toxicity objective for protection of aquatic life.

(d) Plant Performance and Attainability. Prior to discharging, the Discharger dechlorinates the treated effluent using sodium bisulfite. The Central Valley Water Board concludes, therefore, that compliance with chlorine residual effluent limitations is feasible.

iii. Chlorodibromomethane

(a) WQO. The CTR includes a criterion of 0.41 µg/L for chlorodibromomethane for the protection of human health for waters from which both water and organisms are consumed.

(b) RPA Results. The MEC for chlorodibromomethane was 0.82 µg/L based on five samples collected between January 2008 and May 2012 (MDL 0.37 µg/L, RL 0.5 µg/L). Chlorodibromomethane was not detected in the upstream receiving water based on four samples collected between January 2008 and May 2012 (MDL 0.37 µg/L, RL 0.5 µg/L). Therefore, chlorodibromomethane in the discharge has a reasonable potential to cause or contribute to an in-stream excursion above the CTR criterion for the protection of human health.

(c) WQBELs. This Order contains a final AMEL and MDEL for chlorodibromomethane of 0.41 µg/L and 0.82 µg/L, respectively, based on the CTR criterion for the protection of human health.

(d) Plant Performance and Attainability. Analysis of the effluent data shows that the MEC of 0.82 µg/L is greater than the applicable WQBELs. The Discharger submitted a 20 August 2013 Infeasibility Analysis documenting the compliance strategy for meeting the final effluent limits for chlorodibromomethane. Therefore, a compliance time schedule of 1 March 2018 for compliance with the chlorodibromomethane effluent limitations is established in TSO R5-2013-0147.

iv. Cyanide

(a) WQO. The CTR includes maximum 1-hour average and 4-day average criteria of 22 µg/L and 5.2 µg/L, respectively, for cyanide for the protection of freshwater aquatic life.

(b) RPA Results. The MEC for cyanide was 13 µg/L based on 54 samples collected between January 2008 and May 2012 (minimum MDL 2 µg/L, minimum RL 5 µg/L). The maximum observed upstream receiving water

cyanide concentration was 1.3 µg/L based on four samples collected between January 2008 and May 2012 (minimum MDL 1 µg/L, RL 5 µg/L). Therefore, cyanide in the discharge has a reasonable potential to cause or contribute to an in-stream excursion above the CTR criterion for the protection of freshwater aquatic life.

(c) WQBELs. This Order contains a final AMEL and MDEL for cyanide of 4.2 µg/L and 8.8 µg/L, respectively, based on the CTR criterion for the protection of freshwater aquatic life.

(d) Plant Performance and Attainability. Analysis of the effluent data shows that the MEC of 13 µg/L is greater than applicable WQBELs. TSO R5-2011-0909 provides a compliance schedule to achieve compliance with the final effluent limitations for cyanide by 1 March 2015. TSO R5-2011-0909 was amended to reference this Order.

v. Dichlorobromomethane

(a) WQO. The CTR includes a criterion of 0.56 µg/L for dichlorobromomethane for the protection of human health for waters from which both water and organisms are consumed.

(b) RPA Results. The MEC for dichlorobromomethane was 10 µg/L based on 55 samples collected between January 2008 and May 2012 (minimum MDL 0.067 µg/L, minimum RL 0.5 µg/L). Dichlorobromomethane was not detected in the upstream receiving water based on four samples collected between January 2008 and May 2012 (MDL 0.5 µg/L, RL 0.5 µg/L). Therefore, dichlorobromomethane in the discharge has a reasonable potential to cause or contribute to an in-stream excursion above the CTR criterion for the protection of human health.

(c) WQBELs. This Order contains a final AMEL and MDEL for dichlorobromomethane of 0.56 µg/L and 1.4 µg/L, respectively, based on the CTR criterion for the protection of human health.

(d) Plant Performance and Attainability. Analysis of the effluent data shows that the MEC of 10 µg/L is greater than applicable WQBELs. TSO R5-2011-0909 provides a compliance schedule to achieve compliance with the final effluent limitations for dichlorobromomethane by 1 March 2015. TSO R5-2011-0909 was amended to reference this Order.

vi. Mercury

(a) WQO. The current NAWQC for protection of freshwater aquatic life, continuous concentration, for mercury is 0.77 µg/L (30-day average, chronic criteria). The CTR contains a human health criterion (based on a threshold dose level causing neurological effects in infants) of 0.050 µg/L for waters from which both water and aquatic organisms are consumed.

Both values are controversial and subject to change. In 40 CFR Part 131, USEPA acknowledges that the human health criteria may not be protective of some aquatic or endangered species and that "…*more stringent mercury limits may be determined and implemented through use of the State's narrative criterion.*" In the CTR, USEPA reserved the mercury criteria for freshwater and aquatic life and may adopt new criteria at a later date.

(b) RPA Results. The MEC for mercury was 0.0061 µg/L based on 13 samples collected between January 2008 and May 2012 (minimum MDL 0.0002 µg/L, minimum RL 0.0005 µg/L). The maximum observed upstream receiving water mercury concentration was 0.0037 µg/L based on four samples collected between January 2008 and May 2012 (MDL 0.0002 µg/L, RL 0.0005 µg/L). Mercury bioaccumulates in fish tissue and, therefore, the discharge of mercury to the receiving water may contribute to exceedances of the narrative toxicity objective and impact beneficial uses. Section 2.1.1 of the SIP states that "For bioaccumulative priority pollutants for which the receiving water has been included on the CWA Section 303(d) list, the RWQCB should consider whether the mass loading of the bioaccumulative pollutant(s) should be limited to representative, current levels pending TMDL development in order to implement the applicable water quality standard." The discharge of mercury to surface waters in the Central Valley draining to the Sacramento-San Joaquin Delta are being limited in order to protect the beneficial uses of the Delta. A mercury TMDL for Lake Amador may be proposed in the future.

(c) WQBELs. This Order retains the performance-based mass effluent limitation of 0.0016 lbs/month for mercury from Order R5-2007-0133-01. This limitation is based on maintaining the mercury loading at the current level until the concern of methylmercury concentrations in the receiving water are addressed, a TMDL is established, and/or USEPA develops mercury standards that are protective of human health. This permit may be reopened and the effluent limitations revisited as water quality standards for mercury are established, as appropriate.

(d) Plant Performance and Attainability. The mass limitations for mercury are based on the performance of the treatment system. The Central Valley Water Board concludes, therefore, that immediate compliance with these effluent limitations is feasible.

vii. Nitrate and Nitrite

(a) WQO. DDW has adopted Primary MCLs for the protection of human health for nitrite and nitrate that are equal to 1 mg/L and 10 mg/L (measured as nitrogen), respectively. DDW has also adopted a Primary MCL of 10 mg/L for the sum of nitrate and nitrite, measured as nitrogen.

USEPA has developed a Primary MCL and an MCL goal of 1 mg/L for nitrite (as nitrogen). For nitrate, USEPA has developed Drinking Water Standards (10 mg/L as Primary MCL) and NAWQC for protection of human health (10 mg/L for non-cancer health effects). Recent toxicity studies have indicated a possibility that nitrate is toxic to aquatic organisms.

Order R5-2007-0133-01 included an AMEL for nitrate (as NO_3) of 45 mg/L, which is equivalent to the Primary MCL of 10 mg/L for nitrate (as N).

(b) RPA Results. The Facility is a POTW that treats domestic wastewater. Untreated domestic wastewater contains ammonia in concentrations that, if untreated, will be harmful to fish and will violate the Basin Plan's narrative toxicity objective. This Order, therefore, requires removal of ammonia (i.e., nitrification). Nitrification is a biological process that converts ammonia to nitrite and nitrate. Nitrate concentrations in a drinking water supply above the primary MCL threatens the health of human fetuses and newborn babies by reducing the oxygen-carrying capacity of the blood (methemoglobinemia). Reasonable potential therefore exists and WQBELs are required.

Federal regulations at 40 CFR 122.44(d)(1)(i) require that, "*Limitations must control all pollutants or pollutant parameters (either conventional, nonconventional, or toxic pollutants) which the Director determines are or may be discharged at a level which will cause, have the reasonable potential to cause, or contribute to an excursion above any State water quality standard, including State narrative criteria for water quality.*" For priority pollutants, the SIP dictates the procedures for conducting the RPA. Nitrate and nitrite are not priority pollutants. Therefore, the Central Valley Water Board is not restricted to one particular RPA method. Due to the site-specific conditions of the discharge, the Central Valley Water Board has used professional judgment in determining the appropriate method for conducting the RPA for these non-priority pollutant constituents.

USEPA's September 2010 NPDES Permit Writer's Manual, page 6-30, states, "*State implementation procedures might allow, or even require, a permit writer to determine reasonable potential through a qualitative assessment process without using available facility-specific effluent monitoring data or when such data are not available…A permitting authority might also determine that WQBELs are required for specific pollutants for all facilities that exhibit certain operational or discharge characteristics (e.g., WQBELs for pathogens in all permits for POTWs discharging to contact recreational waters)*." USEPA's TSD also recommends that factors other than effluent data should be considered in the RPA, "*When determining whether or not a discharge causes, has the reasonable potential to cause, or contributes to an excursion of a numeric or narrative water quality criterion for individual toxicants or for toxicity, the*

regulatory authority can use a variety of factors and information where facility-specific effluent monitoring data are unavailable. These factors also should be considered with available effluent monitoring data." With regard to POTWS, USEPA recommends that, "*POTWs should also be characterized for the possibility of chlorine and ammonia problems*." (TSD, p. 50)

As required by Order R5-2007-0133-01, the Discharger monitored for nitrate (as NO_3). The maximum effluent concentration for nitrate (as NO_3) was 124 mg/L based on 230 samples collected between January 2008 and May 2012. Using a conversion factor of 0.2259 to convert nitrate (as NO_3) to nitrate (as N), the maximum effluent concentration for nitrate (as N) was 28 mg/L. Effluent data for nitrite and receiving water data for nitrate and nitrite is not available.

(c) WQBELs. Order R5-2007-0133-01 included an AMEL for nitrate (as NO_3) of 45 mg/L. This Order contains a final AMEL for nitrate plus nitrite of 10 mg/L, based on the protection of the Basin Plan's narrative chemical constituents objective and to assure the treatment process adequately nitrifies and denitrifies the waste stream.

(d) Plant Performance and Attainability. Analysis of the effluent data shows that the maximum effluent concentration for nitrate (as N) of 28 mg/L is greater than applicable WQBEL for nitrate plus nitrite. TSO R5-2011-0909 provides a compliance schedule to achieve compliance with the final effluent limitations for nitrate (as NO_3) by 1 March 2015. TSO R5-2011-0909 was amended to reference this Order.

viii. Pathogens

(a) WQO. DDW has developed reclamation criteria, CCR, Division 4, Chapter 3 (Title 22), for the reuse of wastewater. Title 22 requires that for spray irrigation of food crops, parks, playgrounds, schoolyards, and other areas of similar public access, wastewater be adequately disinfected, oxidized, coagulated, clarified, and filtered, and that the effluent total coliform levels not exceed 2.2 MPN/100 mL as a 7-day median. To more effectively regulate total coliform organisms, this Order also contains additional effluent limitations; effluent total coliform organisms shall not exceed 23 MPN/100 mL more than once in any 30-day period and 240 MPN/100 mL at any time.

Title 22 also requires that recycled water used as a source of water supply for non-restricted recreational impoundments be disinfected tertiary recycled water that has been subjected to conventional treatment. A non-restricted recreational impoundment is defined as *"…an impoundment of recycled water, in which no limitations are imposed on body-contact water recreational activities.*" Title 22 is not directly applicable to surface waters; however, the Central Valley Water Board finds that it is appropriate to

apply an equivalent level of treatment to that required by DDW's reclamation criteria because the receiving water is used for irrigation of agricultural land and for contact recreation purposes. The stringent disinfection criteria of Title 22 are appropriate since the undiluted effluent may be used for the irrigation of food crops and/or for body-contact water recreation. Coliform organisms are intended as an indicator of the effectiveness of the entire treatment train and the effectiveness of removing other pathogens.

(b) RPA Results. Raw domestic wastewater inherently contains human pathogens that threaten human health, and constitute a threatened pollution and nuisance under California Water Code section 13050 if discharged untreated to the receiving water. Reasonable potential therefore exists and WQBELs are required.

Federal regulations at 40 CFR 122.44(d)(1)(i) require that, "*Limitations must control all pollutants or pollutant parameters (either conventional, nonconventional, or toxic pollutants) which the Director determines are or may be discharged at a level which will cause, have the reasonable potential to cause, or contribute to an excursion above any State water quality standard, including State narrative criteria for water quality*." For priority pollutants, the SIP dictates the procedures for conducting the RPA. Pathogens are not a priority pollutant. Therefore, the Central Valley Water Board is not restricted to one particular RPA method. Due to the site-specific conditions of the discharge, the Central Valley Water Board has used professional judgment in determining the appropriate method for conducting the RPA for this non-priority pollutant constituent.

USEPA's September 2010 NPDES Permit Writer's Manual, page 6-30, states, "*State implementation procedures might allow, or even require, a permit writer to determine reasonable potential through a qualitative assessment process without using available facility-specific effluent monitoring data or when such data are not available…A permitting authority might also determine that WQBELs are required for specific pollutants for all facilities that exhibit certain operational or discharge characteristics (e.g., WQBELs for pathogens in all permits for POTWs discharging to contact recreational waters).*" USEPA's TSD also recommends that factors other than effluent data should be considered in the RPA, "*When determining whether or not a discharge causes, has the reasonable potential to cause, or contributes to an excursion of a numeric or narrative water quality criterion for individual toxicants or for toxicity, the regulatory authority can use a variety of factors and information where facility-specific effluent monitoring data are unavailable. These factors also should be considered with available effluent monitoring data*." (TSD, p. 50)

The beneficial uses of Jackson Creek include municipal and domestic supply, water contact recreation, and agricultural irrigation supply, and

there is, at times, less than 20:1 dilution. To protect these beneficial uses, the Central Valley Water Board finds that the wastewater must be disinfected and adequately treated to prevent disease. Although the Discharger provides disinfection, inadequate or incomplete disinfection creates the potential for pathogens to be discharged and provides the basis for the discharge to have a reasonable potential to cause or contribute to an exceedance of the Basin Plan's narrative toxicity objective. Therefore, the Central Valley Water Board finds the discharge has reasonable potential for pathogens and WQBELs are required.

(c) WQBELs. The method of treatment is not prescribed by this Order, however, wastewater must be treated to a level equivalent to that recommended by DDW. In accordance with the requirements of Title 22, this Order includes effluent limitations for total coliform organisms of 2.2 MPN/100 mL as a 7-day median; 23 MPN/100 mL, not to be exceeded more than once in a 30-day period; and 240 MPN/100 mL as an instantaneous maximum. As coliform organisms are living and mobile, it is impracticable to quantify an exact number of coliform organisms and to establish weekly average limitations. Instead, coliform organisms are measured as a most probable number and regulated based on a 7-day median limitation.

In addition to coliform limitations, an operational specification for turbidity has been included to monitor the effectiveness of treatment filter performance, and to assure compliance with the required level of treatment.

The Title 22 tertiary treatment process utilized at the Facility is capable of reliably treating wastewater to a turbidity level of 2 nephelometric turbidity units (NTU). Failure of the filtration system such that virus removal is impaired would normally result in increased particles in the effluent, which result in higher effluent turbidity. Turbidity has a major advantage for monitoring filter performance, allowing immediate detection of filter failure and rapid corrective action. Coliform testing, by comparison, is not conducted continuously and requires several hours, to days, to identify high coliform concentrations. In accordance with DDW recommendations, this Order includes operational specifications for turbidity of 2 NTU as a daily average, 5 NTU not to be exceeded more than 5 percent of the time within a 24-hour period; and 10 NTU as an instantaneous maximum.

This Order contains effluent limitations for BOD_5, total coliform organisms, and TSS, and requires a tertiary level of treatment, or equivalent, necessary to protect the beneficial uses of the receiving water. The Central Valley Water Board has previously considered the factors in Water Code section 13241 in establishing these requirements.

Final WQBELs for BOD_5 and TSS are based on the technical capability of the tertiary process, which is necessary to protect the beneficial uses of

the receiving water. BOD_5 is a measure of the amount of oxygen used in the biochemical oxidation of organic matter. The tertiary treatment standards for BOD_5 and TSS are indicators of the effectiveness of the tertiary treatment process. The principal design parameter for wastewater treatment plants is the daily BOD_5 and TSS loading rates and the corresponding removal rate of the system. The application of tertiary treatment processes results in the ability to achieve lower levels for BOD_5 and TSS than the secondary standards currently prescribed. Therefore, this Order requires compliance with AMELs for BOD_5 and TSS of 10 mg/L and compliance with average weekly effluent limitations of 15 mg/L, which is based on the technical capability of a tertiary system. In addition to the average weekly and average monthly effluent limitations, a daily maximum effluent limitation for BOD_5 and TSS is included in the Order to ensure that the treatment works are not organically overloaded and operate in accordance with design capabilities.

(d) Plant Performance and Attainability. The Discharger is unable to consistently comply with the final effluent limitations for total coliform organisms. TSO R5-2011-0909 provides a compliance schedule to achieve compliance with the final effluent limitations for total coliform organisms by 1 March 2015. TSO R5-2011-0909 was amended to reference this Order. This Order contains effluent limitations for BOD_5 and TSS that the Discharger was able to meet over the previous permit term. The Central Valley Water Board concludes, therefore, that immediate compliance with these effluent limitations for BOD_5 and TSS is feasible.

ix. pH

(a) WQO. The Basin Plan includes a water quality objective for surface waters (except for Goose Lake) that the *"…pH shall not be depressed below 6.5 nor raised above 8.5.*"

(b) RPA Results. Raw domestic wastewater inherently has variable pH that if not properly controlled would violate the Basin Plan's numeric objective for pH in the receiving water. Therefore, reasonable potential exists and WQBELs for pH are required.

Federal regulations at 40 CFR 122.44(d)(1)(i) require that, "*Limitations must control all pollutants or pollutant parameters (either conventional, nonconventional, or toxic pollutants) which the Director determines are or may be discharged at a level which will cause, have the reasonable potential to cause, or contribute to an excursion above any State water quality standard, including State narrative criteria for water quality*." For priority pollutants, the SIP dictates the procedures for conducting the RPA. Therefore, the Central Valley Water Board is not restricted to one particular RPA method. Due to the site-specific conditions of the discharge, the Central Valley Water Board has used best professional

judgment in determining the appropriate method for conducting the RPA for pH.

USEPA's September 2010 NPDES Permit Writer's Manual, page 6-30, states, "*State implementation procedures might allow, or even require, a permit writer to determine reasonable potential through a qualitative assessment process without using available facility-specific effluent monitoring data or when such data are not available…A permitting authority might also determine that WQBELs are required for specific pollutants for all facilities that exhibit certain operational or discharge characteristics (e.g., WQBELs for pathogens in all permits for POTWs discharging to contact recreational waters)*." USEPA's TSD also recommends that factors other than effluent data should be considered in the RPA, "*When determining whether or not a discharge causes, has the reasonable potential to cause, or contributes to an excursion of a numeric or narrative water quality criterion for individual toxicants or for toxicity, the regulatory authority can use a variety of factors and information where facility-specific effluent monitoring data are unavailable. These factors also should be considered with available effluent monitoring data*." (TSD, p. 50)

The Facility is a POTW that treats domestic wastewater. Although the Discharger has proper pH controls in place, the pH for the Facility's influent varies due to the nature of municipal sewage, which provides the basis for the discharge to have a reasonable potential to cause or contribute to an in-stream excursion above the Basin Plan's numeric objective for pH in the receiving water. Therefore, WQBELs for pH are required in this Order.

(c) WQBELs. An effluent limitation for pH of 6.5 as an instantaneous minimum is included in this Order based on protection of the Basin Plan objective for pH. Order R5-2007-0133-01 included a more stringent instantaneous maximum pH limitation of 8.0 based on a 30 July 2007 request from the Discharger. Data collected over the term of Order R5-2007-0133-01 indicate that pH of the effluent was consistently below 8.0. Therefore, consistent with Order R5-2007-0133-01, this Order establishes a more stringent instantaneous maximum pH limitation of 8.0.

(d) Plant Performance and Attainability. The effluent pH ranged from 6.1 to 7.9. The effluent pH was observed below the instantaneous minimum effluent limitation only twice based on 1,547 samples collected between January 2008 and May 2012. The Central Valley Water Board concludes, therefore, that immediate compliance with these effluent limitations is feasible.

x. Total Trihalomethanes

(a) WQO. DDW has adopted a Primary MCL for total trihalomethanes of 80 µg/L, which is protective of the Basin Plan's chemical constituent objective. Total trihalomethanes include bromoform, chloroform, chlorodibromomethane, and dichlorobromomethane.

(b) RPA Results. Chloroform concentrations are often used as an indication of total trihalomethane concentrations. The MEC for chloroform was 160 µg/L based on five samples collected between January 2008 and May 2012 (MDL 0.17 µg/L, RL 0.5 µg/L). Bromoform was not detected in the effluent based on five samples collected between January 2008 and May 2012 (MDL 0.13 µg/L, RL 2 µg/L). The MECs for chlorodibromomethane and dichlorobromomethane were 0.82 µg/L (MDL 0.37 µg/L, RL 0.5 µg/L) and 10 µg/L (minimum MDL 0.067 µg/L, RL 0.5 µg/L), respectively. Thus, the MEC sum of the four CTR constituents is 173 µg/L, which is greater than the primary MCL for total trihalomethanes of 80 µg/L. No total trihalomethanes were detected in the upstream receiving water based on four samples collected between January 2008 and May 2012. Based on the total trihalomethanes detected in the discharge, the discharge has a reasonable potential to cause or contribute to an in-stream excursion above the Primary MCL.

(c) WQBELs. This Order contains an AMEL for total trihalomethanes of 80 µg/L based on the Basin Plan's narrative chemical constituents objective for protection of the MUN beneficial use.

(d) Plant Performance and Attainability. Analysis of the effluent data shows that the MEC for chloroform of 160 µg/L is greater than the applicable WQBEL. The Discharger submitted a 20 August 2013 Infeasibility Analysis documenting the compliance strategy for meeting the final effluent limits for chlorodibromomethane. Therefore, a compliance time schedule of 1 March 2018 for compliance with the chlorodibromomethane effluent limitations is established in TSO R5-2013-0147.

4. WQBEL Calculations

a. This Order includes WQBELs for ammonia, BOD_5, chlorine residual, chlorodibromomethane, cyanide, dichlorobromomethane, mercury, nitrate plus nitrite, pH, total coliform organisms, total trihalomethanes, and TSS. The general methodology for calculating WQBELs based on the different criteria/objectives is described in subsections IV.C.4.b through e, below. See Attachment H for the WQBEL calculations.

b. Effluent Concentration Allowance. For each water quality criterion/objective, the ECA is calculated using the following steady-state mass balance equation from Section 1.4 of the SIP:

$ECA = C + D(C - B)$ *where C>B, and*
$ECA = C$ *where C≤B*

where:

ECA = effluent concentration allowance
D = dilution credit
C = the priority pollutant criterion/objective
B = the ambient background concentration.

According to the SIP, the ambient background concentration (B) in the equation above shall be the observed maximum with the exception that an ECA calculated from a priority pollutant criterion/objective that is intended to protect human health from carcinogenic effects shall use the arithmetic mean concentration of the ambient background samples. For ECAs based on MCLs, which implement the Basin Plan's chemical constituents objective and are applied as annual averages, an arithmetic mean is also used for B due to the long-term basis of the criteria.

c. **Basin Plan Objectives and MCLs.** For WQBELs based on site-specific numeric Basin Plan objectives or MCLs, the effluent limitations are applied directly as the ECA as either an MDEL, AMEL, or average annual effluent limitations, depending on the averaging period of the objective.

d. **Aquatic Toxicity Criteria.** WQBELs based on acute and chronic aquatic toxicity criteria are calculated in accordance with Section 1.4 of the SIP. The ECAs are converted to equivalent long-term averages (i.e., LTA_{acute} and $LTA_{chronic}$) using statistical multipliers and the lowest LTA is used to calculate the AMEL and MDEL using additional statistical multipliers.

e. **Human Health Criteria.** WQBELs based on human health criteria, are also calculated in accordance with Section 1.4 of the SIP. The ECAs are set equal to the AMEL and a statistical multiplier was used to calculate the MDEL.

$$AMEL = mult_{AMEL}\left[\min\left(\overbrace{M_A ECA_{acute}}^{LTA_{acute}}, M_C ECA_{chronic}\right)\right]$$

$$MDEL = mult_{MDEL}\left[\min\left(M_A ECA_{acute}, \underbrace{M_C ECA_{chronic}}_{LTA_{chronic}}\right)\right]$$

$$MDEL_{HH} = \left(\frac{mult_{MDEL}}{mult_{AMEL}}\right) AMEL_{HH}$$

where:
$mult_{AMEL}$ = statistical multiplier converting minimum LTA to AMEL
$mult_{MDEL}$ = statistical multiplier converting minimum LTA to MDEL

M_A = statistical multiplier converting acute ECA to LTA_{acute}
M_C = statistical multiplier converting chronic ECA to $LTA_{chronic}$

Summary of Water Quality-Based Effluent Limitations
Discharge Point No. 001

Table F-17. Summary of Water Quality-Based Effluent Limitations

Parameter	Units	Effluent Limitations				
		Average Monthly	Average Weekly	Maximum Daily	Instantaneous Minimum	Instantaneous Maximum
Conventional Pollutants						
Biochemical Oxygen Demand (5-day @ 20°C)	mg/L	10	15	30	--	--
	lbs/day[1]	60	90	180	--	--
pH	standard units	--	--	--	6.5	8.0
Total Suspended Solids	mg/L	10	15	30	--	--
	lbs/day[1]	60	90	180	--	--
Priority Pollutants						
Chlorodibromomethane	µg/L	0.41	--	0.82	--	--
Cyanide, Total (as CN)	µg/L	4.2	--	8.8	--	--
Dichlorobromomethane	µg/L	0.56	--	1.4	--	--
Mercury, Total Recoverable	lbs/month	0.0016[2]	--	--	--	--
Non-Conventional Pollutants						
Ammonia Nitrogen, Total (as N)	mg/L	2.3	--	5.5	--	--
	lbs/day[1]	14	--	33	--	--
Chlorine, Total Residual	mg/L	--	0.011[3]	0.019[4]	--	--
Nitrate Plus Nitrite (as N)	mg/L	10	--	--	--	--
Total Coliform Organisms	MPN/100 mL	--	2.2[5]	23[6]	--	240
Total Trihalomethanes[7]	µg/L	80	--	--	--	--

1 Mass-based effluent limitations are based on a permitted average dry weather flow of 0.71 MGD.
2 The total monthly mass discharge of total mercury shall not exceed 0.0016 lbs/month.
3 Applied as a 4-day average effluent limitation.
4 Applied as a 1-hour average effluent limitation.
5 Applied as a 7-day median effluent limitation.
6 Not to be exceeded more than once in any 30-day period.
7 Applies to the sum of bromoform, chlorodibromomethane, chloroform, and dichlorobromomethane.

5. Whole Effluent Toxicity (WET)

For compliance with the Basin Plan's narrative toxicity objective, this Order requires the Discharger to conduct whole effluent toxicity testing for acute and chronic toxicity, as specified in the Monitoring and Reporting Program (Attachment E section V.). This Order also contains effluent limitations for acute toxicity and requires the Discharger to implement best management practices to investigate the causes of, and identify corrective actions to reduce or eliminate effluent toxicity.

a. Acute Aquatic Toxicity. The Basin Plan contains a narrative toxicity objective that states, "*All waters shall be maintained free of toxic substances in concentrations that produce detrimental physiological responses in human, plant, animal, or aquatic life.*" (Basin Plan at page III-8.00) The Basin Plan also states that, *"…effluent limits based upon acute biotoxicity tests of effluents will be prescribed where appropriate…*".

For priority pollutants, the SIP dictates the procedures for conducting the RPA. Acute toxicity is not a priority pollutant. Therefore, the Central Valley Water Board is not restricted to one particular RPA method. Acute whole effluent toxicity is not a priority pollutant. Therefore, due to the site-specific conditions of the discharge, the Central Valley Water Board has used professional judgment in determining the appropriate method for conducting the RPA . USEPA's September 2010 NPDES Permit Writer's Manual, page 6-30, states, "*State implementation procedures might allow, or even require, a permit writer to determine reasonable potential through a qualitative assessment process without using available facility-specific effluent monitoring data or when such data are not available…A permitting authority might also determine that WQBELs are required for specific pollutants for all facilities that exhibit certain operational or discharge characteristics (e.g., WQBELs for pathogens in all permits for POTWs discharging to contact recreational waters).*" Although the discharge has been consistently in compliance with the acute effluent limitations, the Facility is a POTW that treats domestic wastewater containing ammonia and other acutely toxic pollutants. Acute toxicity effluent limits are required to ensure compliance with the Basin Plan's narrative toxicity objective.

USEPA Region 9 provided guidance for the development of acute toxicity effluent limitations in the absence of numeric water quality objectives for toxicity in its document titled "Guidance for NPDES Permit Issuance", dated February 1994. In section B.2. "Toxicity Requirements" (pgs. 14-15) it states that, "*In the absence of specific numeric water quality objectives for acute and chronic toxicity, the narrative criterion 'no toxics in toxic amounts' applies. Achievement of the narrative criterion, as applied herein, means that ambient waters shall not demonstrate for acute toxicity: 1) less than 90% survival, 50% of the time, based on the monthly median, or 2) less than 70% survival, 10% of the time, based on any monthly median. For chronic toxicity, ambient waters shall not demonstrate a test result of greater than 1 TUc.*" Consistent with Order R5-2007-0133-01, effluent limitations for acute toxicity have been included in this Order as follows:

> **Acute Toxicity.** Survival of aquatic organisms in 96-hour bioassays of undiluted waste shall be no less than:
>
> Minimum for any one bioassay---------- 70%
> Median for any three consecutive bioassays ---------- 90%

b. Chronic Aquatic Toxicity. Basin Plan contains a narrative toxicity objective that states, "*All waters shall be maintained free of toxic substances in concentrations that produce detrimental physiological responses in human, plant, animal, or*

aquatic life." (Basin Plan at page III-8.00.) Based on chronic WET testing performed by the Discharger between January 2008 and May 2012, the discharge does not have reasonable potential to cause or contribute to an in-stream excursion above of the Basin Plan's narrative toxicity objective, as shown in the table below. Chronic toxicity to green algae growth was observed once in January 2010; however, it was not observed again in subsequent chronic toxicity testing.

Table F-18. Whole Effluent Chronic Toxicity Testing Results

Date	Fathead Minnow		Water Flea		Green Algae
	Pimephales promelas		*Ceriodaphnia dubia*		*Selenastrum capricornutum*
	Survival (TUc)	Growth (TUc)	Survival (TUc)	Reproduction (TUc)	Growth (TUc)
22 January 2008	1	--	1	1	1
23 July 2008	1	1	1	1	1
21 January 2009	1	1	1	1	1
20 July 2009	1	1	1	1	1
25 January 2010	1	1	1	1	8
22 February 2010	1	1	1	1	1
26 February 2010	--	--	--	--	1
15 March 2010	--	--	--	--	1
30 March 2010	--	--	--	--	1
11 July 2010	1	1	1	1	1
25 January 2011	1	1	1	1	1
8 August 2011	1	1	1	1	1

Consistent with Order R5-2007-0133-01, the Monitoring and Reporting Program of this Order requires semi-annual chronic WET monitoring for demonstration of compliance with the narrative toxicity objective. In addition to WET monitoring, the Special Provision in section VI.C.2.a of the Order requires the Discharger to submit to the Central Valley Water Board an Initial Investigative Toxicity Reduction Evaluation (TRE) Workplan for approval by the Executive Officer, to ensure the Discharger has a plan to immediately move forward with the initial tiers of a TRE, in the event effluent toxicity is encountered in the future. The provision also includes a numeric toxicity monitoring trigger, requirements for accelerated monitoring, and requirements for TRE initiation if toxicity is demonstrated.

Numeric chronic WET effluent limitations have not been included in this Order. The SIP contains implementation gaps regarding the appropriate form and implementation of chronic toxicity limits. This has resulted in the petitioning of a NPDES permit in the Los Angeles Region[1] that contained numeric chronic

[1] In the Matter of the Review of Own Motion of Waste Discharge Requirements Order Nos. R4-2002-0121 [NPDES No. CA0054011] and R4-2002-0123 [NPDES NO. CA0055119] and Time Schedule Order Nos. R4-2002-0122 and R4-2002-0124 for Los Coyotes and Long Beach Wastewater Reclamation Plants Issued by the California Regional Water Quality Control Board, Los Angeles Region SWRCB/OCC FILES A-1496 AND 1496(a)

toxicity effluent limitations. To address the petition, the State Water Board adopted WQO 2003-012 directing its staff to revise the toxicity control provisions in the SIP. The State Water Board states the following in WQO 2003-012, "*In reviewing this petition and receiving comments from numerous interested persons on the propriety of including numeric effluent limitations for chronic toxicity in NPDES permits for publicly-owned treatment works that discharge to inland waters, we have determined that this issue should be considered in a regulatory setting, in order to allow for full public discussion and deliberation. We intend to modify the SIP to specifically address the issue. We anticipate that review will occur within the next year. We therefore decline to make a determination here regarding the propriety of the final numeric effluent limitations for chronic toxicity contained in these permits."* The process to revise the SIP is currently underway. Proposed changes include clarifying the appropriate form of effluent toxicity limits in NPDES permits and general expansion and standardization of toxicity control implementation related to the NPDES permitting process. Since the toxicity control provisions in the SIP are under revision it is infeasible to develop numeric effluent limitations for chronic toxicity. Therefore, this Order requires that the Discharger meet best management practices for compliance with the Basin Plan's narrative toxicity objective, as allowed under 40 CFR 122.44(k).

To ensure compliance with the Basin Plan's narrative toxicity objective, the Discharger is required to conduct chronic WET testing, as specified in the Monitoring and Reporting Program (Attachment E section V.). Furthermore, the Special Provision contained at VI.C.2.a. of this Order requires the Discharger to investigate the causes of, and identify and implement corrective actions to reduce or eliminate effluent toxicity. If the discharge demonstrates toxicity exceeding the numeric toxicity monitoring trigger, the Discharger is required to initiate a TRE in accordance with an approved TRE workplan. The numeric toxicity monitoring trigger is not an effluent limitation; it is the toxicity threshold at which the Discharger is required to perform accelerated chronic toxicity monitoring, as well as, the threshold to initiate a TRE if effluent toxicity has been demonstrated.

D. Final Effluent Limitations

1. Mass-based Effluent Limitations

40 CFR 122.45(f)(1) requires effluent limitations be expressed in terms of mass, with some exceptions, and 40 CFR 122.45(f)(2) allows pollutants that are limited in terms of mass to additionally be limited in terms of other units of measurement. This Order includes effluent limitations expressed in terms of mass and concentration. In addition, pursuant to the exceptions to mass limitations provided in 40 CFR 122.45(f)(1), some effluent limitations are not expressed in terms of mass, such as pH and temperature, and when the applicable standards are expressed in terms of concentration (e.g., CTR criteria and MCLs) and mass limitations are not necessary to protect the beneficial uses of the receiving water.

Mass-based effluent limitations have been established in this Order for ammonia, BOD_5, and TSS because they are oxygen-demanding substances. A mass-based effluent limitation has been established for mercury because it is a bioaccumulative pollutant. Mass-based effluent limitations were calculated based upon the design flow (average dry weather flow) permitted in section IV.A.1.f of this Order. Except for the pollutants listed above, mass-based effluent limitations are not included in this Order for pollutant parameters for which effluent limitations are based on water quality objectives and criteria that are concentration-based.

2. Averaging Periods for Effluent Limitations

40 CFR 122.45 (d) requires average weekly and average monthly discharge limitations for POTWs unless impracticable. However, for toxic pollutants and pollutant parameters in water quality permitting, USEPA recommends the use of an MDEL in lieu of average weekly effluent limitations for two reasons. "*First, the basis for the 7-day average for POTWs derives from the secondary treatment requirements. This basis is not related to the need for assuring achievement of water quality standards. Second, a 7-day average, which could comprise up to seven or more daily samples, could average out peak toxic concentrations and therefore the discharge's potential for causing acute toxic effects would be missed.*" (TSD, pg. 96) This Order uses MDELs in lieu of average weekly effluent limitations for ammonia, chlorodibromomethane, cyanide, and dichlorobromomethane as recommended by the TSD for the achievement of water quality standards and for the protection of the beneficial uses of the receiving stream. Furthermore, for BOD_5, chlorine residual, pH, total coliform organisms, and TSS, weekly average effluent limitations have been replaced or supplemented with effluent limitations utilizing shorter averaging periods. The rationale for using shorter averaging periods for these constituents is discussed in section IV.C.3 of this Fact Sheet.

For effluent limitations based on Primary and Secondary MCLs, except nitrate and nitrite, this Order includes annual average effluent limitations. The Primary and Secondary MCLs are drinking water standards contained in Title 22 of the California Code of Regulations. Title 22 requires compliance with these standards on an annual average basis (except for nitrate and nitrite), when sampling at least quarterly. Since it is necessary to determine compliance on an annual average basis, it is impracticable to calculate average weekly and average monthly effluent limitations.

3. Satisfaction of Anti-Backsliding Requirements

The CWA specifies that a revised permit may not include effluent limitations that are less stringent than the previous permit unless a less stringent limitation is justified based on exceptions to the anti-backsliding provisions contained in CWA sections 402(o) or 303(d)(4), or, where applicable, 40 CFR 122.44(l).

The effluent limitations in this Order are at least as stringent as the effluent limitations in Order R5-2007-0133-01, with the exception of effluent limitations for aluminum, copper, diazinon, 2,6-dinitrotoluene, 1,2-diphenylhydrazine, electrical

conductivity, iron, manganese, settleable solids, silver, tetrachloroethylene, turbidity, and zinc. The effluent limitations for these pollutants are less stringent than those in Order R5-2007-0133-01 as described below. This relaxation of effluent limitations is consistent with the anti-backsliding requirements of the CWA and federal regulations.

a. **CWA sections 402(o)(1) and 303(d)(4).** CWA section 402(o)(1) specifies that, in the case of effluent imitations established on the basis of CWA section 301(b)(1)(C) (i.e., WQBELs), a permit may not be renewed, reissued, or modified to contain effluent limitations which are less stringent than the comparable effluent limitations in the previous permit except in compliance with CWA section 303(d)(4). The effluent limitations for aluminum, copper, diazinon, 2,6-dinitrotoluene, 1,2-diphenylhydrazine, electrical conductivity, iron, manganese, settleable solids, silver, tetrachloroethylene, and zinc established in Order R5-2007-0133-01 are WQBELs and may be relaxed if the requirements of CWA section 303(d)(4) are satisfied.

   CWA section 303(d)(4) has two parts: paragraph (A) which applies to nonattainment waters and paragraph (B) which applies to attainment waters. For attainment waters, CWA section 303(d)(4)(B) specifies that a limitation based on a water quality standard may be relaxed where the action is consistent with the antidegradation policy. The 303(d) listings for Jackson Creek, as described in section III.D.1 of this Fact Sheet, do not include aluminum, copper, diazinon, 2,6-dinitrotoluene, 1,2-diphenylhydrazine, electrical conductivity, iron, manganese, settleable solids, silver, tetrachloroethylene, or zinc. Thus the receiving water is an attainment water for these constituents.

   The removal of the WQBELs for 1,2-diphenylhydrazine will not result in an increase in pollutant concentration or loading, a decrease in the level of treatment or control, or a reduction of water quality. Therefore, the removal of 1,2-diphenylhydrazine WQBELs complies with antidegradation requirements and does not violate anti-backsliding requirements. The removal or relaxation of WQBELs for aluminum, copper, diazinon, 2,6-dinitrotoluene, 1,2-diphenylhydrazine, electrical conductivity, iron, manganese, settleable solids, silver, tetrachloroethylene, and zinc is consistent with CWA sections 402(o)(1) and 303(d)(4) and, as described in section IV.D.4 of this Fact Sheet, the antidegradation provisions of 40 CFR 131.12 and State Water Board Resolution No. 68-16. Therefore, the modifications to these effluent limitations do not violate anti-backsliding requirements.

b. **CWA section 402(o)(2).** CWA section 402(o)(2) provides several exceptions to the anti-backsliding regulations. CWA 402(o)(2)(B)(i) allows a renewed, reissued, or modified permit to contain a less stringent effluent limitation for a pollutant if information is available which was not available at the time of permit issuance (other than revised regulations, guidance, or test methods) and which would have justified the application of a less stringent effluent limitation at the time of permit issuance.

As described further in section IV.C.3.b of this Fact Sheet, updated information that was not available at the time Order R5-2007-0133-01 was issued indicates that aluminum, copper, diazinon, 2,6-dinitrotoluene, electrical conductivity, iron, manganese, settleable solids, silver, tetrachloroethylene, and zinc do not exhibit reasonable potential to cause or contribute to an exceedance of water quality objectives in the receiving water. As described further in section IV.C.3.c. of this Fact Sheet, updated information that was not available at the time Order R5-2007-0133-01 was issued indicates that removal of the effluent limitations for 2,6-dinitrotoluene and 1,2-diphenylhydrazine is appropriate. The updated information that supports the relaxation of effluent limitations for these constituents includes the following:

i. **Aluminum.** Receiving water monitoring data for water quality characteristics (e.g., pH and hardness) collected between January 2008 and May 2012, as well as local environmental conditions and aluminum toxicity study results indicates that the recommend NAWQC chronic criterion of 87 µg/L is not applicable to Jackson Creek. Effluent monitoring data collected between January 2008 and May 2012 indicates that the discharge does not exhibit reasonable potential to cause or contribute to an exceedance of the Secondary MCL or NAWQC acute criterion.

ii. **Copper.** As described in section IV.C.2.f of this Fact Sheet, the Discharger performed a WER study according to the USEPA procedures outlined in the *2001 Streamlined Water-Effect Ratio Procedure for Discharges of Copper* (EPA 822-R-01-005) to determine a site-specific WER value and calculate site-specific criteria for copper. Based on the WER study, a WER value of 5 is determined to be appropriate for the discharge to Jackson Creek. Using a WER value of 5 to adjust the criteria for copper, the site-specific acute and chronic criteria for copper is 54 µg/L and 37 µg/L, respectively. The maximum observed upstream receiving water copper concentration was 1.8 µg/L based on four samples collected between January 2008 and October 2014. The MEC for copper was 13 µg/L based on 84 samples collected between January 2008 and October 2014. Neither the maximum receiving water concentration nor the MEC for copper exceed the applicable site-specific criterion. Therefore, effluent and receiving water monitoring data collected between January 2008 and October 2014 indicates that copper in the discharge does not exhibit reasonable potential to cause or contribute to an exceedance of the site-specific criterion.

iii. **Diazinon.** As described in section IV.C.3.b.iii, Order R5-2007-0133-01 established effluent limitations based on DFG acute and chronic criteria of 0.08 µg/L and 0.05 µg/L to implement the Basin Plan's narrative toxicity objective. DFG recalculated the diazinon criteria to exclude questionable toxicity test values in 2004, which was subsequently confirmed by the Central Valley Water Board in the *Basin Plan Amendments to the Water Quality Control Plan for the Sacramento River and San Joaquin River Basins for the Control of Diazinon and Chlorpyrifos Runoff into the Sacramento and Feather Rivers, May 2007 Final Staff Report*. Thus, the applicable acute and chronic

criteria to implement the Basin Plan's narrative toxicity objective for diazinon are 0.16 µg/L and 0.10 µg/L, respectively. Effluent and receiving water monitoring data collected between January 2008 and May 2012 indicates that diazinon in the discharge does not exhibit reasonable potential to cause or contribute to an exceedance of the Basin Plan's narrative toxicity objective.

iv. **Electrical Conductivity.** Effluent and receiving water monitoring data collected between January 2008 and May 2012 indicates that electrical conductivity in the discharge does not exhibit reasonable potential to cause or contribute to an exceedance of water quality objectives for salinity.

v. **Iron.** Effluent monitoring data collected between January 2008 and May 2012 indicates that iron in the discharge does not exhibit reasonable potential to cause or contribute to an exceedance of the Secondary MCL.

vi. **Manganese.** Effluent monitoring data collected between January 2008 and May 2012 indicates that iron in the discharge does not exhibit reasonable potential to cause or contribute to an exceedance of the Secondary MCL.

vii. **Settleable Solids.** Effluent monitoring data collected between January 2008 and May 2012 for settleable solids indicates that the discharge does not exhibit reasonable potential to cause or contribute to an exceedance of the Basin Plan narrative objective for settleable solids.

viii. **Silver.** Effluent and receiving water monitoring data collected between January 2008 and August 2014 indicates that silver in the discharge does not exhibit reasonable potential to cause or contribute to an exceedance of the CTR aquatic life criterion.

ix. **Tetrachloroethylene.** Effluent and receiving water monitoring data collected between January 2008 and May 2012 indicates that tetrachloroethylene in the discharge does not exhibit reasonable potential to cause or contribute to an exceedance of the CTR human health criterion.

x. **Zinc.** Two significant changes have occurred with the Discharger's system that effect zinc in the effluent discharge. First, the Amador Water Agency has discontinued using zinc orthophosphate in their water supply system for corrosion control. Zinc orthophosphate was the major contributor to elevated zinc concentrations in the wastewater. Second, the Discharger has constructed an alkalinity adjustment system, a.k.a. a lime-feed system, that has the benefit of increasing the hardness of the effluent, thereby reducing the toxicity of zinc in Jackson Creek. Because of these changes and the subsequent new effluent and receiving water monitoring data collected between November 2012 and October 2014, zinc in the discharge does not exhibit reasonable potential to cause or contribute to an exceedance of the CTR aquatic life criterion.

xi. **2,6-dinitrotoluene.** From samples collected between January 2008 and May 2012 indicates that 2,6-dinitrotoluene in the discharge does not exhibit reasonable potential to cause or contribute to an exceedance of the USEPA Integrated Risk Information System (IRIS) and USEPA suggested no-adverse-response level (SNARL) for one-in-a-million incremental cancer risk estimates for drinking water.

xii. **1,2-diphenylhydrazine.** From 53 effluent and 4 receiving water samples collected between January 2008 and May 2012, 1,2-diphenylhydrazine was detected but not quantified in the effluent with a minimum MDL of 0.5 µg/L and was not detected in the receiving water with a minimum MDL of 1 µg/L. As detailed in section IV.C.3 of this Fact Sheet, estimated values, especially for volatile or semi-volatile organics such as 1,2-diphenylhydrazine, are false-positives due to possible matrix interferences during the analytical procedure, and therefore, the Central Valley Water Board consider the data inappropriate to determine whether concentrations in the effluent exceed the CTR criterion. However, the CTR criterion for 1,2-diphenylhydrazine is 0.040 µg/L, which is below the MDLs. Therefore, in accordance with the SIP section 1.3, Step 8, since the lowest MDL for the samples is greater than the CTR water quality criterion, monitoring is required in place of WQBELs. The removal of the WQBELs will not result in an increase in the pollutant concentration or loading, a decrease in the level of treatment or control, or a reduction of water quality.

Thus, removal or relaxation of the effluent limitations for aluminum, copper, diazinon, electrical conductivity, iron, manganese, settleable solids, silver, tetrachloroethylene, zinc, 2,6-dinitrotoluene, and 1,2-diphenylhydrazine from Order R5-2007-0133-01 is in accordance with CWA section 402(o)(2)(B)(i), which allows for the removal of effluent limitations based on information that was not available at the time of permit issuance.

c. **Turbidity.** Order R5-2007-0133-01 contained effluent limitations for turbidity. The prior limitations were solely an operational check to ensure the treatment system was functioning properly and could meet the limits for solids and coliform. The prior effluent limitations were not intended to regulate turbidity in the receiving water. Rather, turbidity is an operational parameter to determine proper system functioning and not a WQBEL.

This Order contains operational turbidity specifications to be met in lieu of effluent limitations. The revised Order does not include effluent limitations for turbidity. However, the performance-based specification in this Order is an equivalent limit that is not less stringent, and therefore does not constitute backsliding.

The revised operational specifications for turbidity are the same as the effluent limitations in Order R5-2007-0133-01. These revisions are consistent with State regulations implementing recycled water requirements. The revision in the turbidity limitation is consistent with the antidegradation provisions of

40 CFR 131.12 and State Water Board Resolution 68-16 because this Order imposes equivalent or more stringent requirements than Order R5-2007-0133-01 and therefore does not allow degradation.

4. Satisfaction of Antidegradation Policy

This Order does not allow for an increase in flow or mass of pollutants to the receiving water. Therefore, a complete antidegradation analysis is not necessary. The Order requires compliance with applicable federal technology-based standards and with WQBELs where the discharge could have the reasonable potential to cause or contribute to an exceedance of water quality standards. The permitted discharge is consistent with the antidegradation provisions of 40 CFR 131.12 and State Water Board Resolution No. 68-16. Compliance with these requirements will result in the use of best practicable treatment or control of the discharge. The impact on existing water quality will be insignificant.

This Order removes or relaxes existing effluent limitations for aluminum, copper, diazinon, 2,6-dinitrotoluene, 1,2-diphenylhydrazine, electrical conductivity, iron, manganese, settleable solids, silver, tetrachloroethylene, turbidity, and zinc based on updated monitoring data which demonstrates that the effluent does not cause or contribute to an exceedance of the applicable water quality criteria or objectives in the receiving water. The Central Valley Water Board finds that the relaxation of the effluent limitations does not result in an allowed increase in pollutants or any additional degradation of the receiving water. Thus, the relaxation of effluent limitations is consistent with the antidegradation provisions of 40 CFR 131.12 and State Water Board Resolution No. 68-16.

5. Stringency of Requirements for Individual Pollutants

This Order contains both technology-based effluent limitations and WQBELs for individual pollutants. The technology-based effluent limitations consist of restrictions on flow and percent removal requirements for BOD_5 and TSS. The WQBELs consist of restrictions on ammonia, BOD_5, chlorine residual, chlorodibromomethane, cyanide, dichlorobromomethane, mercury, nitrate plus nitrite, pH, total coliform organisms, total trihalomethanes, and TSS. This Order's technology-based pollutant restrictions implement the minimum, applicable federal technology-based requirements. In addition, this Order includes effluent limitations for BOD_5, total coliform organisms, and TSS to meet numeric objectives or protect beneficial uses.

WQBELs have been scientifically derived to implement water quality objectives that protect beneficial uses. Both the beneficial uses and the water quality objectives have been approved pursuant to federal law and are the applicable federal water quality standards. To the extent that toxic pollutant WQBELs were derived from the CTR, the CTR is the applicable standard pursuant to 40 CFR 131.38. The scientific procedures for calculating the individual WQBELs for priority pollutants are based on the CTR-SIP, which was approved by USEPA on 18 May 2000. All beneficial uses and water quality objectives contained in the Basin Plan were approved under state law and submitted to and approved by USEPA prior to 30 May 2000. Any water

quality objectives and beneficial uses submitted to USEPA prior to 30 May 2000, but not approved by USEPA before that date, are nonetheless "applicable water quality standards for purposes of the CWA" pursuant to 40 CFR 131.21(c)(1). Collectively, this Order's restrictions on individual pollutants are no more stringent than required to implement the requirements of the CWA.

Summary of Final Effluent Limitations
Discharge Point No. 001

Table F-19. Summary of Final Effluent Limitations

Parameter	Units	Effluent Limitations					Basis[1]
		Average Monthly	Average Weekly	Maximum Daily	Instantaneous Minimum	Instantaneous Maximum	
Average Dry Weather Flow	MGD	--	--	0.71	--	--	DC
Conventional Pollutants							
Biochemical Oxygen Demand (5-day @ 20°C)	mg/L	10	15	30	--	--	TTC
	lbs/day[2]	60	90	180	--	--	
	% Removal	85	--	--	--	--	CFR
pH	standard units	--	--	--	6.5	8.0	BP, DC
Total Suspended Solids	mg/L	10	15	30	--	--	TTC
	lbs/day[2]	60	90	180	--	--	
	% Removal	85	--	--	--	--	CFR
Priority Pollutants							
Chlorodibromomethane	µg/L	0.41	--	0.82	--	--	CTR
Cyanide, Total (as CN)	µg/L	4.2	--	8.8	--	--	CTR
Dichlorobromomethane	µg/L	0.56	--	1.4	--	--	CTR
Mercury, Total Recoverable	lbs/month	0.0016[3]	--	--	--	--	PB
Non-Conventional Pollutants							
Ammonia Nitrogen, Total (as N)	mg/L	2.3	--	5.5	--	--	NAWQC
	lbs/day[2]	14	--	33	--	--	
Chlorine, Total Residual	mg/L	--	0.011[4]	0.019[5]	--	--	NAWQC
Nitrate Plus Nitrite (as N)	mg/L	10	--	--	--	--	MCL
Total Coliform Organisms	MPN/100 mL	--	2.2[6]	23[7]	--	240	Title 22
Total Trihalomethanes[8]	µg/L	80	--	--	--	--	MCL
Acute Toxicity	% Survival	--	--	[9]	--	--	BP

Parameter	Units	Effluent Limitations					Basis[1]
		Average Monthly	Average Weekly	Maximum Daily	Instantaneous Minimum	Instantaneous Maximum	

[1] DC – Based on the design capacity of the Facility.
TTC – Based on tertiary treatment capability. These effluent limitations reflect the capability of a properly operated tertiary treatment plant.
CFR – Based on secondary treatment standards contained in 40 CFR Part 133.
BP – Based on water quality objectives contained in the Basin Plan.
CTR – Based on water quality criteria contained in the California Toxics Rule and applied as specified in the SIP.
PB – Based on treatment plant performance.
NAWQC – Based on USEPA's National Ambient Water Quality Criteria for the protection of freshwater aquatic life.
MCL – Based on the Primary Maximum Contaminant Level.
Title 22 – Based on DDW Reclamation Criteria, CCR, Division 4, Chapter 3 (Title 22).

[2] Mass-based effluent limitations are based on a permitted average dry weather flow of 0.71 MGD.

[3] The total monthly mass discharge of total mercury shall not exceed 0.0016 lbs/month.

[4] Applied as a 4-day average effluent limitation.

[5] Applied as a 1-hour average effluent limitation.

[6] Applied as a 7-day median effluent limitation.

[7] Not to be exceeded more than once in any 30-day period.

[8] Applies to the sum of bromoform, chlorodibromomethane, chloroform, and dichlorobromomethane.

[9] Survival of aquatic organisms in 96-hour bioassays of undiluted waste shall be no less than:
Minimum for any one bioassay: 70%
Median for any three consecutive bioassays: 90%

E. Interim Effluent Limitations – Not Applicable

F. Land Discharge Specifications – Not Applicable

G. Reclamation Specifications – Not Applicable

V. RATIONALE FOR RECEIVING WATER LIMITATIONS

Basin Plan water quality objectives to protect the beneficial uses of surface water and groundwater include numeric objectives and narrative objectives, including objectives for chemical constituents, toxicity, and tastes and odors. The toxicity objective requires that surface water and groundwater be maintained free of toxic substances in concentrations that produce detrimental physiological responses in humans, plants, animals, or aquatic life. The chemical constituent objective requires that surface water and groundwater shall not contain chemical constituents in concentrations that adversely affect any beneficial use or that exceed the MCLs in Title 22, CCR. The tastes and odors objective states that surface water and groundwater shall not contain taste- or odor-producing substances in concentrations that cause nuisance or adversely affect beneficial uses. The Basin Plan requires the application of the most stringent objective necessary to ensure that surface water and groundwater do not contain chemical constituents, toxic substances, radionuclides, or taste and odor producing substances in concentrations that adversely affect domestic drinking water supply, agricultural supply, or any other beneficial use.

A. Surface Water

1. CWA section 303(a-c), requires states to adopt water quality standards, including criteria where they are necessary to protect beneficial uses. The Central Valley

Water Board adopted water quality criteria as water quality objectives in the Basin Plan. The Basin Plan states that "[t]*he numerical and narrative water quality objectives define the least stringent standards that the Regional Water Board will apply to regional waters in order to protect the beneficial uses.*" The Basin Plan includes numeric and narrative water quality objectives for various beneficial uses and water bodies. This Order contains receiving surface water limitations based on the Basin Plan numerical and narrative water quality objectives for bacteria, biostimulatory substances, color, chemical constituents, dissolved oxygen, floating material, oil and grease, pH, pesticides, radioactivity, suspended sediment, settleable substances, suspended material, tastes and odors, temperature, toxicity, and turbidity.

a. pH. Order R5-2007-0133-01 established a receiving water limitation for pH specifying that discharges from the Facility shall not cause the ambient pH to change by more than 0.5 units based on the water quality objective for pH in the Basin Plan, and allowed a 1-month averaging period for calculating pH change. The Central Valley Water Board adopted Resolution No. R5-2007-0136 on 25 October 2007, amending the Basin Plan to delete the portion of the pH water quality objective that limits the change in pH to 0.5 units and the allowance of averaging periods for pH. The Basin Plan amendment has been approved by the State Water Board, the Office of Administrative Law, and USEPA. Consistent with the revised water quality objective in the Basin Plan, this Order does not require a receiving water limitation for pH change.

In Finding No. 14 of Resolution No. R5-2007-0136, the Central Valley Water Board found that the change in the pH receiving water objective is consistent with the State Water Board Resolution No. 68-16, in that the changes to water quality objectives (i) consider maximum benefit to the people of the State, (ii) will not unreasonably affect present and anticipated beneficial use of waters, and (iii) will not result in water quality less than that prescribed in policies, and is consistent with the federal Antidegradation Policy (40 CFR 131.12).

Ammonia is the only constituent in the discharge regulated by this Order directly related to pH. The fixed ammonia effluent limitations in this Order are based on reasonable worse-case conditions. Although ammonia criteria are based on pH, and the pH receiving water limitations are more lenient in this Order than in the previous permit, the fixed ammonia limits were developed to protect under worse-case pH conditions. Therefore the relaxation of the pH receiving water limitation will protect aquatic life and other beneficial uses and will not unreasonably affect present and anticipated beneficial uses nor result in water quality less than described in applicable policies. The relaxation of the receiving water limitation is not expected to cause other impacts on water quality. The Central Valley Water Board finds that the relaxation of the pH receiving water limitation (i) is to the maximum benefit to the people of the State, (ii) will not unreasonably affect present and anticipated beneficial use of waters, and (iii) will not result in water quality less than that prescribed in policies, and is consistent with the federal Antidegradation Policy (40 CFR 131.12).

The revised receiving water limitation for pH, which is based on the amendment to the Basin Plan's pH water quality objective, reflects current scientifically supported pH requirements for the protection of aquatic life and other beneficial uses. The revised receiving water limitation for pH is more consistent with the current USEPA recommended criteria and is fully protective of aquatic life and the other beneficial uses listed in the Basin Plan. Changes in pH when pH is maintained within the range of 6.5 to 8.5 are neither beneficial nor adverse and, therefore, are not considered to be degradation in water quality. Attempting to restrict pH changes to 0.5 pH units would incur substantial costs without demonstrable benefits to beneficial uses. Thus, any changes in pH that would occur under the revised pH limitation would not only be protective of beneficial uses, but also would be consistent with maximum benefit to people of the State. Therefore the proposed amendment will not violate antidegradation policies.

b. Turbidity. Order R5-2007-0133-01 established a receiving water limitation for turbidity specifying that discharges from the Facility shall not cause the turbidity to increase more than 1 NTU where natural turbidity is between 0 and 5 NTU based on the water quality objective for turbidity in the Basin Plan. The Central Valley Water Board adopted Resolution R5-2007-0136 on 25 October 2007, amending the Basin Plan to limit turbidity to 2 NTU when the natural turbidity is less than 1 NTU. The Basin Plan amendment has been approved by the State Water Board, the Office of Administrative Law, and USEPA. Consistent with the revised water quality objective in the Basin Plan, this Order limits turbidity to 2 NTU when the natural turbidity is less than 1 NTU.

In Finding No. 14 of Resolution R5-2007-0136 the Central Valley Water Board found that the change in the turbidity receiving water objective is consistent with the State Water Board Resolution No. 68-16, in that the changes to water quality objectives (i) consider maximum benefit to the people of the State, (ii) will not unreasonably affect present and anticipated beneficial use of waters, and (iii) will not result in water quality less than that prescribed in policies, and is consistent with the federal Antidegradation Policy (40 CFR 131.12).

This Order includes operational specifications that require the Discharger to operate the treatment system to insure that turbidity shall not exceed 2 NTU as a daily average, and 5 NTU more than 5 percent of the time within a 24 hour period, and 10 NTU, at any time. Because this Order limits the average daily discharge of turbidity to 2 NTU, the Order will be protective of the receiving water under all natural background conditions as defined in the Basin Plan’s revised water quality objective for turbidity. The relaxation of the turbidity receiving water limitation will protect aquatic life and other beneficial uses and will not unreasonably affect present and anticipated beneficial uses nor result in water quality less than described in applicable policies. The relaxation of the receiving water limitation is not expected to cause other impacts on water quality. The Central Valley Water Board finds that the relaxation of the turbidity receiving water limitation is to the maximum benefit to the people of the State, (ii) will not unreasonably affect present and anticipated beneficial use of waters, and (iii) will

not result in water quality less than that prescribed in policies, and is consistent with the federal Antidegradation Policy (40 CFR 131.12).

The revised receiving water limitation for turbidity, which is based on the amendment to the Basin Plan's turbidity water quality objective, reflects current scientifically supported turbidity requirements for the protection of aquatic life and other beneficial uses and, therefore, will be fully protective of aquatic life and the other beneficial uses listed in the Basin Plan. Changes in turbidity allowed by the revised receiving water limitation, when ambient turbidity is below 1 NTU, would not adversely affect beneficial uses and would maintain water quality at a level higher than necessary to protect beneficial uses. Restricting low-level turbidity changes further may require costly upgrades, which would not provide any additional protection of beneficial uses. Thus, any changes in turbidity that would occur under the amended turbidity receiving water limitation would not only be protective of beneficial uses, but also would be consistent with maximum benefit to people of the State. Therefore, the relaxed receiving water limitations for turbidity will not violate antidegradation policies.

B. Groundwater – Not Applicable

VI. RATIONALE FOR MONITORING AND REPORTING REQUIREMENTS

40 CFR 122.48 requires that all NPDES permits specify requirements for recording and reporting monitoring results. Water Code sections 13267 and 13383 authorize the Regional Water Boards to require technical and monitoring reports. The Monitoring and Reporting Program (Attachment E) of this Order, establishes monitoring and reporting requirements to implement federal and state requirements. The following provides the rationale for the monitoring and reporting requirements contained in the Monitoring and Reporting Program for the Facility.

A. Influent Monitoring

1. Influent monitoring is required to collect data on the characteristics of the wastewater and to assess compliance with effluent limitations (e.g., BOD_5 and TSS reduction requirements). The monitoring frequencies for flow (continuous), BOD_5 (weekly), and TSS (weekly) have been retained from Order R5-2007-0133-01.

B. Effluent Monitoring

1. Pursuant to the requirements of 40 CFR 122.44(i)(2) effluent monitoring is required for all constituents with effluent limitations. Effluent monitoring is necessary to assess compliance with effluent limitations, assess the effectiveness of the treatment process, and to assess the impacts of the discharge on the receiving stream and groundwater.

2. Effluent monitoring frequencies and sample types for flow (continuous), BOD_5 (twice per week), pH (twice per week), TSS (twice per week), cyanide (monthly), dichlorobromomethane (monthly), mercury (quarterly), ammonia (twice per week),

chlorine residual (continuous), temperature (twice per week), total coliform organisms (three times per week), total dissolved solids (quarterly), and turbidity (continuous) have been retained from Order R5-2007-0133-01 to determine compliance with effluent limitations for these parameters, where applicable, and to characterize the effluent.

3. Monitoring data collected over the term of Order R5-2007-0133-01 for silver, tetrachloroethylene, aluminum, diazinon, iron, manganese, methyl tertiary butyl ether, 2,3,7,8-TCDD and other dioxin and furan congeners and settleable solids did not demonstrate reasonable potential to exceed water quality objectives/criteria. Thus, specific monitoring requirements for these parameters have not been retained from Order R5-2007-0133-01.

4. The Discharger performed a copper WER study, constructed an alkalinity adjustment system that increases effluent hardness, and zinc orthophosphate is no longer used in the water supply. Therefore, copper and zinc do not demonstrate reasonable potential to exceed water quality criteria. Thus, specific monitoring requirements for copper and zinc have been removed from Order R5-2013-0146 by this amendment.

5. Section 3 of the SIP states for minor dischargers to *"monitor its effluent for the presence of the 17 [2,3,7,8-TCDD] congeners once during dry weather and once during wet weather for one year during the three-year period."* Section 3 of the SIP further states that *"Based on the monitoring results, the RWQCB may, at its discretion, increase the monitoring requirement (e.g., increase sampling frequency) to further investigate frequent or significant detection of any congener. At the conclusion of the three-year monitoring period, the SWQCB and RWQCBs will assess the data (a total of six samples each from major POTWs and industrial dischargers, and a total of two from each minor POTWs and industrial dischargers), and determine whether further monitoring is necessary."* The Discharger was able to collect a valid sample during both the wet and dry season from the seven samples collected during the last permit term. Plus, the Discharger collected four quarterly 2,3,7,8-TCDD congener samples from the effluent and receiving water in 2002. The Discharger has meet the requirements of SIP section 2.4.5.1 and is not required to further monitor for the 17 2,3,7,8-TCDD congeners.

6. Monitoring data collected over the term of Order R5-2007-0133-01 for chlorodibromomethane and total trihalomethanes indicates that the discharge has reasonable potential to cause or contribute to an exceedance of water quality objectives/criteria and effluent limitations have been established in this Order. Therefore, this Order establishes monthly monitoring for chlorodibromomethane and total trihalomethanes to determine compliance with the applicable effluent limitations.

7. Order R5-2007-0133-01 required monthly monitoring for 1,2-diphenylhydrazine. As described in section IV.C.3.c of this Fact Sheet, since the lowest MLs from the SIP for carbon tetrachloride and 1,2-diphenylhydrazine are greater than the applicable CTR criteria, the SIP requires (Section 1.3, Step 8) additional monitoring for the

pollutant in place of a WQBEL. This Order requires monitoring for carbon tetrachloride and 1,2-diphenylhydrazine quarterly during the same year (third year of the permit term) as the priority pollutant monitoring required in Attachment I of this Order.

8. As described in section IV.C.3.c.iii. of this Fact Sheet, since an additional bis (2-ethylhexyl) phthalate sample analyzed by a laboratory specializing in low-level analysis indicated that effluent concentrations were below the applicable CTR criteria, the data collected was determined to be inconclusive and a WQBEL was not established. The SIP requires (Section 1.3, Step 8) additional monitoring for the pollutant in place of a WQBEL. This Order requires monitoring for bis (2-ethylhexyl) phthalate quarterly during the same year (third year of the permit term) as the priority pollutant monitoring required in Attachment I of this Order.

9. This Order reduces the monitoring frequency for electrical conductivity from twice per week to weekly. The Central Valley Water Board finds that this frequency will provide sufficient information to monitor the performance of the Facility.

10. Order R5-2007-0133-01 established an effluent limitation and monthly monitoring requirements for nitrate (as NO_3). This Order replaces the effluent limitation for nitrate (as NO_3) with an equivalent limitation for nitrate plus nitrite (as N). Therefore, this Order discontinues monitoring requirements for nitrate (as NO_3) and establishes monthly monitoring for nitrate and nitrite (as N).

11. This Order establishes monthly monitoring for hardness to ensure that adequate data is available to properly adjust water quality criteria for hardness-based metals.

12. Priority pollutant data for the effluent has been provided by the Discharger over the term of Order R5-2007-0133-01 and was used to conduct an RPA. In accordance with Section 1.3 of the SIP, periodic monitoring for priority pollutants for which criteria or objectives apply and for which no effluent limitations have been established is required. Consistent with Order R5-2007-0133-01, this Order requires monitoring quarterly during the third year of the permit term in order to collect data to conduct an RPA for the next permit renewal. See Attachment I for more detained requirements related to performing priority pollutant monitoring.

13. California Water Code section 13176, subdivision (a), states: "T*he analysis of any material required by [Water Code sections 13000-16104] shall be performed by a laboratory that has accreditation or certification to Article 3 (commencing with Section 100825) of Chapter 4 of Part 1 of Division 101 of the Health and Safety Code*." DDW certifies laboratories through ELAP.

Section 13176 cannot be interpreted in a manner that would violate federal holding time requirements that apply to NPDES permits pursuant to the CWA. (Wat. Code §§ 13370, subd. (c), 13372, 13377.) Section 13176 is inapplicable to NPDES permits to the extent it is inconsistent with Clean Water Act requirements. (Wat. Code § 13372, subd. (a).) The holding time requirements are 15 minutes for chlorine residual, dissolved oxygen, and pH and immediate analysis is required for

temperature. (40 CFR 136.3(e), Table II) Due to the location of the Facility, it is both legally and factually impossible for the Discharger to comply with section 13176 for constituents with short holding times.

C. Whole Effluent Toxicity Testing Requirements

1. **Acute Toxicity.** Consistent with Order R5-2007-0133-01, semi-annual 96-hour bioassay testing is required to demonstrate compliance with the effluent limitation for acute toxicity.

2. **Chronic Toxicity.** Consistent with Order R5-2007-0133-01, semi-annual chronic whole effluent toxicity testing is required in order to demonstrate compliance with the Basin Plan's narrative toxicity objective.

D. Receiving Water Monitoring

1. Surface Water

a. Receiving water monitoring is necessary to assess compliance with receiving water limitations and to assess the impacts of the discharge on the receiving stream.

b. Receiving water monitoring frequencies and sample types for upstream and downstream of Discharge Point No. 001 flow (daily, upstream only), pH (twice per week), dissolved oxygen (twice per week), electrical conductivity (twice per week), fecal coliform organisms (quarterly), hardness (quarterly), temperature (twice per week), and turbidity (twice per week) have been retained from Order R5-2007-0133-01.

c. Monitoring requirements for ammonia, chlorine residual, and radionuclides have not been retained from Order R5-2007-0133-01 as they are not necessary to determine compliance with permit requirements.

d. Priority pollutant data for the receiving water has been provided by the Discharger over the term of Order R5-2007-0133-01, and was used to conduct an RPA. In accordance with Section 1.3 of the SIP, periodic monitoring for priority pollutants for which criteria or objectives apply and for which no effluent limitations have been established. Consistent with Order R5-2007-0133-01, this Order requires monitoring quarterly during the third year of the permit term for priority pollutants and other pollutants of concern, performed concurrently with effluent monitoring, in order to collect data to conduct an RPA for the next permit renewal. See Attachment I for more detailed requirements related to performing priority pollutant monitoring.

2. Groundwater – Not Applicable

E. Other Monitoring Requirements

1. Biosolids Monitoring

Biosolids monitoring is required to ensure compliance with the biosolids disposal requirements contained in the Special Provision contained in section VI.C.6.a. of this Order. Biosolids disposal requirements are imposed pursuant to 40 CFR Part 503 to protect public health and prevent groundwater degradation.

2. Water Supply Monitoring

Water supply monitoring is required to evaluate the source of constituents in the wastewater. Consistent with Order R5-2007-0133-01, this Order requires annual water supply monitoring for electrical conductivity, standard minerals, and total dissolved solids.

3. UV Disinfection System Monitoring

UV system specifications and monitoring and reporting is required when the UV system becomes operational to ensure that adequate UV dosage is applied to the wastewater to inactivate pathogens in the wastewater. UV Disinfection system monitoring is imposed pursuant to requirements established by the DDW, and the National Water Research Institute (NWRI), and American Water Works Association Research Foundation NWRI/AWWARF's *"Ultraviolet Disinfection Guidelines for Drinking Water and Water Reuse."* The Central Valley Water Board recommends that the Discharger contact DDW for a list of approved UV disinfection systems prior to procuring a UV disinfection system.

4. Effluent and Receiving Water Characterization Study

An effluent and receiving water monitoring study is required to ensure adequate information is available for the next permit renewal. During the third year of this permit term, the Discharger is required to conduct quarterly monitoring of the effluent at Monitoring Location EFF-001 and of the receiving water at Monitoring Location RSW-001 for all priority pollutants and other constituents of concern as described in Attachment I.

VII. RATIONALE FOR PROVISIONS

A. Standard Provisions

Standard Provisions, which apply to all NPDES permits in accordance with 40 CFR 122.41, and additional conditions applicable to specified categories of permits in accordance with 40 CFR 122.42, are provided in Attachment D. The discharger must comply with all standard provisions and with those additional conditions that are applicable under 40 CFR 122.42.

40 CFR 122.41(a)(1) and (b) through (n) establish conditions that apply to all State-issued NPDES permits. These conditions must be incorporated into the permits either

expressly or by reference. If incorporated by reference, a specific citation to the regulations must be included in the Order. 40 CFR 123.25(a)(12) allows the state to omit or modify conditions to impose more stringent requirements. In accordance with 40 CFR 123.25, this Order omits federal conditions that address enforcement authority specified in 40 CFR 122.41(j)(5) and (k)(2) because the enforcement authority under the Water Code is more stringent. In lieu of these conditions, this Order incorporates by reference Water Code section 13387(e).

B. Special Provisions

1. Reopener Provisions

a. **Mercury.** This provision allows the Central Valley Water Board to reopen this Order in the event mercury is found to be causing toxicity based on acute or chronic toxicity test results, or if a TMDL program is adopted. In addition, this Order may be reopened if the Central Valley Water Board determines that a mercury offset program is feasible for dischargers subject to NPDES permits.

b. **Whole Effluent Toxicity.** This Order requires the Discharger to investigate the causes of, and identify corrective actions to reduce or eliminate effluent toxicity through a TRE. This Order may be reopened to include a chronic toxicity limitation, a new acute toxicity limitation, and/or a limitation for a specific toxicant identified in the TRE. Additionally, if a numeric chronic toxicity water quality objective is adopted by the State Water Board, this Order may be reopened to include a numeric chronic toxicity limitation based on that objective.

c. **20:1 Dilution in Lake Amador.** This prohibition is based on DDW recommendation that discharges from wastewater treatment plants to municipal water supplies maintain a minimum of 20:1 dilution to ensure the protection of the downstream domestic beneficial use of Jackson Creek and public health. If DDW determines that the 20:1 dilution is no longer necessary, this Order may be reopened to remove Prohibition III.E.

2. Special Studies and Additional Monitoring Requirements

a. **Chronic Whole Effluent Toxicity Requirements.** The Basin Plan contains a narrative toxicity objective that states, "*All waters shall be maintained free of toxic substances in concentrations that produce detrimental physiological responses in human, plant, animal, or aquatic life*." (Basin Plan at page III-8.00.) Based on whole effluent chronic toxicity testing performed by the Discharger between January 2008 and May 2012, the discharge does not have reasonable potential to cause or contribute to an in-stream excursion above of the Basin Plan's narrative toxicity objective.

The Monitoring and Reporting Program of this Order requires chronic WET monitoring for demonstration of compliance with the narrative toxicity objective.

In addition to WET monitoring, this provision requires the Discharger to submit to the Central Valley Water Board an Initial Investigative TRE Workplan for approval by the Executive Officer, to ensure the Discharger has a plan to immediately move forward with the initial tiers of a TRE, in the event effluent toxicity is encountered in the future. The provision also includes a numeric toxicity monitoring trigger, requirements for accelerated monitoring, and requirements for TRE initiation if toxicity is demonstrated.

Monitoring Trigger. A numeric toxicity monitoring trigger of **> 1** TUc (where TUc = 100/NOEC) is applied in the provision, because this Order does not allow any dilution for the chronic condition. Therefore, a TRE is triggered when the effluent exhibits toxicity at 100% effluent.

Accelerated Monitoring. The provision requires accelerated WET testing when a regular WET test result exceeds the monitoring trigger. The purpose of accelerated monitoring is to determine, in an expedient manner, whether there is toxicity before requiring the implementation of a TRE. Due to possible seasonality of the toxicity, the accelerated monitoring should be performed in a timely manner, preferably taking no more than 2 to 3 months to complete.

The provision requires accelerated monitoring consisting of four chronic toxicity tests in a six-week period (i.e., one test every two weeks) using the species that exhibited toxicity. Guidance regarding accelerated monitoring and TRE initiation is provided in the *Technical Support Document for Water Quality-based Toxics Control,* EPA/505/2-90-001, March 1991 (TSD). The TSD at page 118 states, "*EPA recommends if toxicity is repeatedly or periodically present at levels above effluent limits more than 20 percent of the time, a TRE should be required.*" Therefore, four accelerated monitoring tests are required in this provision. If no toxicity is demonstrated in the four accelerated tests, then it demonstrates that toxicity is not present at levels above the monitoring trigger more than 20 percent of the time (only 1 of 5 tests are toxic, including the initial test). However, notwithstanding the accelerated monitoring results, if there is adequate evidence of effluent toxicity (i.e. toxicity present exceeding the monitoring trigger more than 20 percent of the time), the Executive Officer may require that the Discharger initiate a TRE.

See the WET Accelerated Monitoring Flow Chart (Figure F-1), below, for further clarification of the accelerated monitoring requirements and for the decision points for determining the need for TRE initiation.

TRE Guidance. The Discharger is required to prepare a TRE Workplan in accordance with USEPA guidance. Numerous guidance documents are available, as identified below:

- Toxicity Reduction Evaluation Guidance for Municipal Wastewater Treatment Plants, EPA/833-B-99/002, August 1999.

- Generalized Methodology for Conducting Industrial Toxicity Reduction Evaluations (TREs), EPA/600/2-88/070, April 1989.
- Methods for Aquatic Toxicity Identification Evaluations: Phase I Toxicity Characterization Procedures, Second Edition, EPA 600/6-91/003, February 1991.
- Toxicity Identification Evaluation: Characterization of Chronically Toxic Effluents, Phase I, EPA/600/6-91/005F, May 1992.
- Methods for Aquatic Toxicity Identification Evaluations: Phase II Toxicity Identification Procedures for Samples Exhibiting Acute and Chronic Toxicity, Second Edition, EPA/600/R-92/080, September 1993.
- Methods for Aquatic Toxicity Identification Evaluations: Phase III Toxicity Confirmation Procedures for Samples Exhibiting Acute and Chronic Toxicity, Second Edition, EPA 600/R-92/081, September 1993.
- Methods for Measuring the Acute Toxicity of Effluents and Receiving Waters to Freshwater and Marine Organisms, Fifth Edition, EPA-821-R-02-012, October 2002.
- Short-term Methods for Estimating the Chronic Toxicity of Effluents and Receiving Waters to Freshwater Organisms, Fourth Edition, EPA-821-R-02-013, October 2002.
- Technical Support Document for Water Quality-based Toxics Control, EPA/505/2-90-001, March 1991.

Figure F-1
WET Accelerated Monitoring Flow Chart

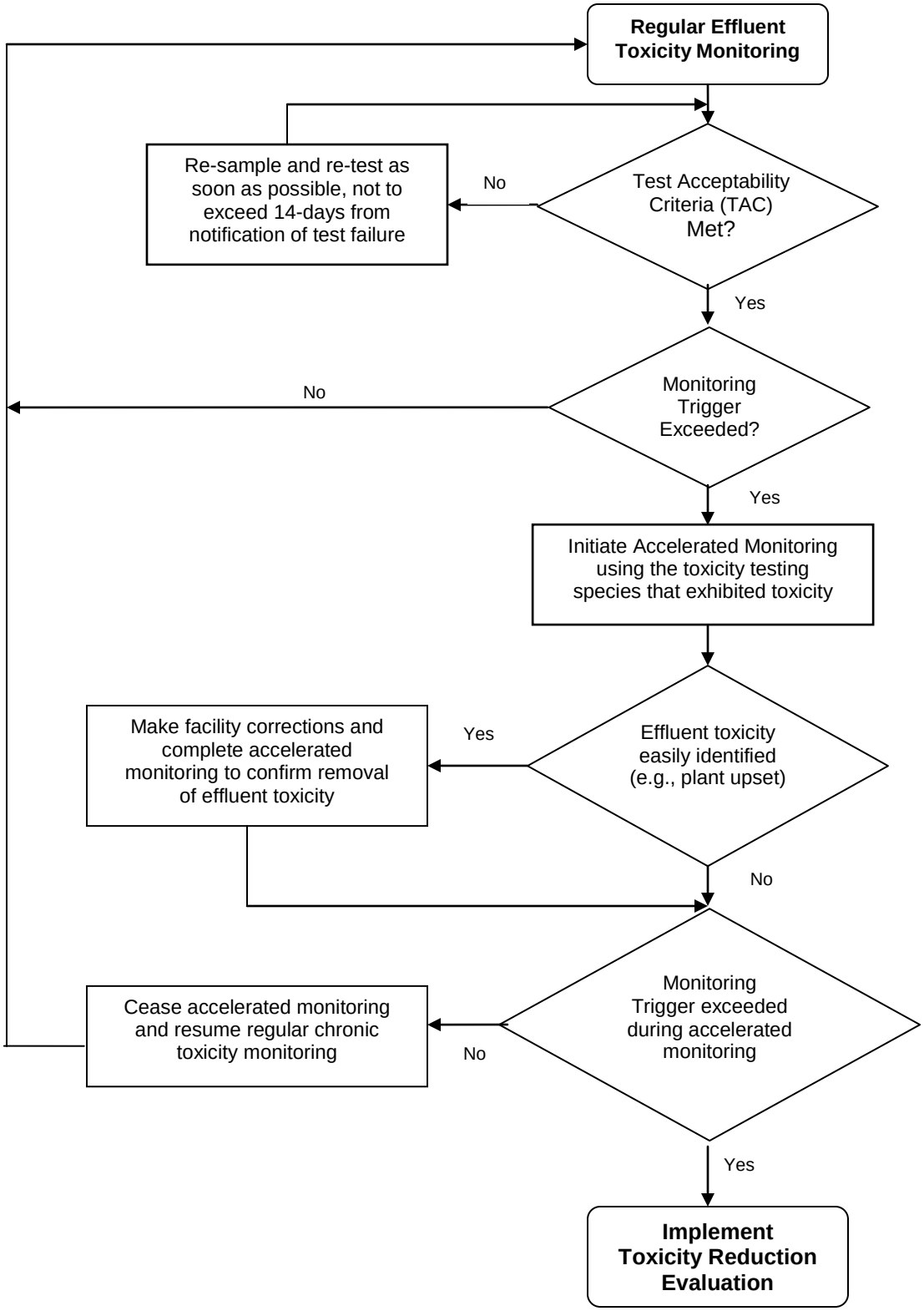

3. Best Management Practices and Pollution Prevention

a. Salinity Evaluation and Minimization Plan. An Evaluation and Minimization Plan for salinity is required in this Order to ensure adequate measures are developed and implemented by the Discharger to reduce the discharge of salinity to Jackson Creek.

The Discharger indicated during a 23 May 2012 site visit that they are currently planning a compliance project proposing the addition of lime (i.e., calcium hydroxide) to the treatment system to control alkalinity to aid the nitrification and denitrification process. The Central Valley Water Board generally discourages the addition of chemicals when unnecessary for treatment, because it increases the potential for hardness and salinity to be discharged to the receiving water. Therefore, the Plan shall include an evaluation that identifies and quantifies chemical additives necessary for the proper operation and treatment of the Facility (e.g., calcium hydroxide for alkalinity control, polymer addition for filter performance, etc.). The Plan shall evaluate and propose feasible methods or alternatives for reducing the amount of chemical additives that increase the salinity and other constituent concentrations or levels in of the discharge, while still providing adequate treatment. The Central Valley Clean Water Association (CVCWA), working closely with Central Valley Water Board staff, has studied the chemical addition to wastewater for enhancement of nitrogen removal, and developed a white paper titled “Nitrogen Removal and pH Control in Wastewater and its Secondary Effects on Hardness, Metals Toxicity and Salinity,” dated 21 February 2012. To meet the requirements for this Plan regarding addition of operation-enhancing chemicals, the Discharger may certify that its chemical addition is consistent with the premise and conclusions of the above referenced white paper.

4. Construction, Operation, and Maintenance Specifications

a. Turbidity Operational Requirements. Turbidity is included as an operational specification as an indicator of the effectiveness of the treatment process and to assure compliance with effluent limitations for total coliform organisms. The tertiary treatment process utilized at this Facility is capable of reliably meeting a turbidity limitation of 2 NTU as a daily average. Failure of the treatment system such that virus removal is impaired would normally result in increased particles in the effluent, which result in higher effluent turbidity. Turbidity has a major advantage for monitoring filter performance, allowing immediate detection of filter failure and rapid corrective action. The operational specification requires that turbidity shall not exceed 2 NTU as a daily average; 5 NTU, more than 5 percent of the time within a 24-hour period, and an instantaneous maximum of 10 NTU. Turbidity specifications are included as operating criteria in section VI.C.4.a of this Order to ensure that adequate disinfection of wastewater is achieved.

5. Special Provisions for Municipal Facilities (POTWs Only)

a. Pretreatment Requirements. This Order requires the Discharger to implement the necessary legal authorities, programs, and controls to ensure that incompatible wastes are not introduced into the treatment system and to ensure that indirect discharges do not introduce pollutants into the sewerage system.

b. Collection System. The State Water Board issued General Waste Discharge Requirements for Sanitary Sewer Systems, Water Quality Order No. 2006-0003-DWQ (General Order) on 2 May 2006. The General Order requires public agencies that own or operate sanitary sewer systems with greater than one mile of pipes or sewer lines to enroll for coverage under the General Order. The General Order requires agencies to develop sanitary sewer management plans (SSMPs) and report all sanitary sewer overflows (SSOs), among other requirements and prohibitions.

Furthermore, the General Order contains requirements for operation and maintenance of collection systems and for reporting and mitigating sanitary sewer overflows. Inasmuch that the Discharger's collection system is part of the system that is subject to this Order, certain standard provisions are applicable as specified in Provisions, section VI.C.5. For instance, the 24-hour reporting requirements in this Order are not included in the General Order. The Discharger must comply with both the General Order and this Order. The Discharger and public agencies that are discharging wastewater into the Facility were required to obtain enrollment for regulation under the General Order by 1 December 2006.

6. Other Special Provisions

a. Consistent with Order R5-2007-0133-01, this Order requires wastewater to be oxidized, coagulated, filtered, and adequately disinfected pursuant to DDW reclamation criteria, CCR, Title 22, division 4, chapter 3 (Title 22), or equivalent. This Order does not include the requirements for unrestricted beneficial reuse contained in Chapter 3. For wastewater disposal, the Discharger is required to meet Title 22 tertiary numeric effluent quality (hence the use of "or equivalent"), but not the monitoring, alarm, process design, redundancy, and storage requirements for beneficial reuse that is the full suite of Title 22 requirements.

7. Compliance Schedules – Not Applicable

VIII. PUBLIC PARTICIPATION

The Central Valley Water Board is considering the issuance of WDRs that will serve as an NPDES permit for the Facility. As a step in the WDR adoption process, the Central Valley Water Board staff has developed tentative WDRs. The Central Valley Water Board encourages public participation in the WDR adoption process.

A. Notification of Interested Parties

The Central Valley Water Board has notified the Discharger and interested agencies and persons of its intent to prescribe waste discharge requirements for the discharge and has provided them with an opportunity to submit their written comments and recommendations.

B. Written Comments

The staff determinations are tentative. Interested persons are invited to submit written comments concerning these tentative WDRs. Comments must be submitted either in person or by mail to the Executive Office at the Central Valley Water Board at the address above on the cover page of this Order.

To be fully responded to by staff and considered by the Central Valley Water Board, written comments must be received at the Central Valley Water Board offices by 5:00 p.m. on **23 October 2013**.

C. Public Hearing

The Central Valley Water Board will hold a public hearing on the tentative WDRs during its regular Board meeting on the following date and time and at the following location:

Date:	5/6 December 2013
Time:	8:30 a.m.
Location:	Regional Water Quality Control Board, Central Valley Region 11020 Sun Center Dr., Suite #200 Rancho Cordova, CA 95670

Interested persons are invited to attend. At the public hearing, the Central Valley Water Board will hear testimony, if any, pertinent to the discharge, WDRs, and permit. Oral testimony will be heard; however, for accuracy of the record, important testimony should be in writing.

Please be aware that dates and venues may change. Our Web address is www.waterboards.ca.gov/centralvalley where you can access the current agenda for changes in dates and locations.

D. Waste Discharge Requirements Petitions

Any aggrieved person may petition the State Water Board to review the decision of the Central Valley Water Board regarding the final WDRs. The petition must be received by the State Water Board within 30 days of the Central Valley Water Board's action, and must be submitted to the following address:

State Water Resources Control Board
Office of Chief Counsel
P.O. Box 100, 1001 I Street
Sacramento, CA 95812-0100

E. Information and Copying

The Report of Waste Discharge, related documents, tentative effluent limitations and special provisions, comments received, and other information are on file and may be inspected at the address above at any time between 8:30 a.m. and 4:45 p.m., Monday through Friday. Copying of documents may be arranged through the Central Valley Water Board by calling (916) 464-3291.

F. Register of Interested Persons

Any person interested in being placed on the mailing list for information regarding the WDRs and NPDES permit should contact the Central Valley Water Board, reference this Facility, and provide a name, address, and phone number.

G. Additional Information

Requests for additional information or questions regarding this order should be directed to Josh Palmer at (916) 464-4674.

ATTACHMENT G – SUMMARY OF REASONABLE POTENTIAL ANALYSIS FOR CONSTITUENTS OF CONCERN

Constituent	Units	MEC	B	C	CMC	CCC	Water & Org	Org. Only	Basin Plan	MCL	Reasonable Potential
Aluminum, Total Recoverable	µg/L	84[1]	--	200	750[2]	--	--	--	--	200	No
Ammonia Nitrogen, Total (as N)	mg/L	10	3.2	2.05	5.62[2]	2.05[3]	--	--	--	--	Yes
Bis (2-Ethylhexyl) Phthalate	µg/L	8.1	<2.3	1.8	--	--	1.8	5.9	--	4	Inconclusive
Carbon Tetrachloride	µg/L	0.28J	<0.15	0.25	--	--	0.25	4.4	--	0.5	Inconclusive
Chlorodibromomethane	µg/L	0.82	<0.37	0.41	--	--	0.41	34	--	80[4]	Yes
Chloroform	µg/L	160	<0.17	80[4]	--	--	5.7b	470	--	80[4]	Yes
Copper, Total Recoverable	µg/L	13	1.8	7.3[5]/5.8[6]	11[5]/8[6]	7.3[5]/5.8[6]	1,300	--	--	1,000	No
Cyanide, Total (as CN)	µg/L	13	1.3	5.2	22	5.2	700	220,000	--	150	Yes
Diazinon	µg/L	0.099J	--	0.10	0.16[7]	0.10[8]	--	--	--	--	No
Dichlorobromomethane	µg/L	10	<0.5	0.56	--	--	0.56	46	--	80[4]	Yes
2,6-Dinitrotoluene	µg/L	<0.36	<1.9	0.5[9]	--	--	--	--	--	--	No
1,2-Diphenylhydrazine	µg/L	0.43J	<1	0.040	--	--	0.040	0.54	--	--	Inconclusive
Electrical Conductivity @ 25°C	µmhos/cm	729	565	900	--	--	--	--	--	900	No
Iron, Total Recoverable	µg/L	108[1]	--	300	--	1,000	--	--	--	300	No
Manganese, Total Recoverable	µg/L	32[1]	--	50	--	--	--	100	--	50	No
Mercury, Total Recoverable	µg/L	0.0061	0.0037	0.050	--	--	0.050	0.051	--	2	Yes
Nitrate Nitrogen, Total (as N)	µg/L	28[10]	--	10	--	--	--	--	--	10	Yes
Silver, Total Recoverable	µg/L	<0.19	<0.1	2.4[5]/1.5[6]	2.4[5]/1.5[6]	--	----	--	--	100	No
Tetrachloroethylene	µg/L	0.1	<0.17	0.8	--	--	0.8	8.5	--	5	No
Total Dissolved Solids	mg/L	411	--	500	--	--	--	--	--	500	No
Zinc, Total Recoverable	µg/L	86	12	94[5]/94[6]	94[5]/94[6]	94[5]/94[6]	7,400	26,000	--	5,000	No

Constituent	Units	MEC	B	C	CMC	CCC	Water & Org	Org. Only	Basin Plan	MCL	Reasonable Potential

General Note: All inorganic concentrations are given as a total recoverable.
MEC = Maximum Effluent Concentration
B = Maximum Receiving Water Concentration or lowest detection level, if non-detect
C = Criterion used for Reasonable Potential Analysis
CMC = Criterion Maximum Concentration (CTR or NTR)
CCC = Criterion Continuous Concentration (CTR or NTR)
Water & Org = Human Health Criterion for Consumption of Water & Organisms (CTR or NTR)
Org. Only = Human Health Criterion for Consumption of Organisms Only (CTR or NTR)
Basin Plan = Numeric Site-specific Basin Plan Water Quality Objective
MCL = Drinking Water Standards Maximum Contaminant Level
NA = Not Available
ND = Non-detect

Footnotes:
(1) Represents the maximum observed annual average concentration for comparison with the Secondary MCL.
(2) USEPA National Recommended Ambient Water Quality Criteria, Freshwater Aquatic Life Protection, 1-hour Average.
(3) USEPA National Recommended Ambient Water Quality Criteria, Freshwater Aquatic Life Protection, 30-day Average.
(4) Represents the Primary MCL for total trihalomethanes, which includes bromoform, chlorodibromomethane, chloroform, and dichlorobromomethane.
(5) Criterion to be compared to the maximum effluent concentration.
(6) Criterion to be compared to the maximum assumed upstream receiving water concentration.
(7) California Department of Fish and Game Acute Criterion
(8) California Department of Fish and Game Chronic Criterion
(9) USEPA Integrated Risk Information System (IRIS) and USEPA suggested no-adverse-response level (SNARL) for on-in-a-million incremental cancer risk estimates for drinking water
(10) Represents monitoring data for nitrate (as NO_3) converted to nitrate (as N).

ATTACHMENT H – CALCULATION OF WQBELS

Parameter	Units	Most Stringent Criteria			HH Calculations[1]			Aquatic Life Calculations[1]											Final Effluent Limitations	
		HH	CMC	CCC	ECA_{HH} = $AMEL_{HH}$	AMEL/MDEL $Multiplier_{HH}$	$MDEL_{HH}$	ECA_{acute}	ECA $Multiplier_{acute}$	LTA_{acute}	$ECA_{chronic}$	ECA $Multiplier_{chronic}$	$LTA_{chronic}$	Lowest LTA	AMEL $Multiplier_{95}$	$AMEL_{AL}$	MDEL $Multiplier_{99}$	$MDEL_{AL}$	Lowest AMEL	Lowest MDEL
Ammonia Nitrogen, Total (as N)	mg/L	--	5.62	2.05	--	--	--	5.62	0.23	1.29	2.05	0.7	1.44	1.29	1.81	2.3	4.28	5.5	2.3	5.5
Chlorodibromomethane	µg/L	0.41	--	--	0.41	2.01	0.82	--	--	--	--	--	--	--	--	--	--	--	0.41	0.82
Cyanide, Total (as CN)	µg/L	150	22	5.2	150	2.05	308	22	0.29	6.4	5.2	0.49	2.55	2.55	1.63	4.2	3.45	8.8	4.2	8.8
Dichlorobromomethane	µg/L	0.56	--	--	0.56	2.43	1.4	--	--	--	--	--	--	--	--	--	--	--	0.56	1.4

[1] As described in section IV.C.2.c of the Fact Sheet (Attachment F), calculation of effluent limitations for the protection of human health and aquatic life are determined without the allowance of dilution credits.

ATTACHMENT I – EFFLUENT AND RECEIVING WATER CHARACTERIZATION STUDY

I. Background. Sections 2.4.1 through 2.4.4 of the SIP provide minimum standards for analyses and reporting. (Copies of the SIP may be obtained from the State Water Resources Control Board, or downloaded from http://www.waterboards.ca.gov/iswp/index.html). To implement the SIP, effluent and receiving water data are needed for all priority pollutants. Effluent and receiving water pH and hardness are required to evaluate the toxicity of certain priority pollutants (such as heavy metals) where the toxicity of the constituents varies with pH and/or hardness. In addition to specific requirements of the SIP, the Central Valley Water Board is requiring the following monitoring:

A. Drinking water constituents. Constituents for which drinking water Maximum Contaminant Levels (MCLs) have been prescribed in the California Code of Regulation are included in the *Water Quality Control Plan, Fourth Edition, for the Sacramento and San Joaquin River Basins* (Basin Plan). The Basin Plan defines virtually all surface waters within the Central Valley Region as having existing or potential beneficial uses for municipal and domestic supply. The Basin Plan further requires that, at a minimum, water designated for use as domestic or municipal supply shall not contain concentrations of chemical constituents in excess of the MCLs contained in the California Code of Regulations.

B. Effluent and receiving water temperature. This is both a concern for application of certain temperature-sensitive constituents, such as fluoride, and for compliance with the Basin Plan's thermal discharge requirements.

C. Effluent and receiving water hardness and pH. These are necessary because several of the CTR constituents are hardness and pH dependent.

II. Monitoring Requirements.

A. Quarterly Monitoring. Priority pollutant samples shall be collected from the effluent and upstream receiving water (Monitoring Locations EFF-001 and RSW-001) and analyzed for the constituents listed in Table I-1. Quarterly monitoring shall be conducted for 1 year (four consecutive samples, evenly distributed throughout the year) during the third year and the results of such monitoring shall be submitted to the Central Valley Water Board within 6 months following completion of final monitoring event. Each individual monitoring event shall provide representative sample results for the effluent and upstream receiving water.

B. Concurrent Sampling. Effluent and receiving water sampling shall be performed at approximately the same time, on the same date.

C. Sample type. All effluent samples shall be taken as 24-hour flow proportioned composite samples. All receiving water samples shall be taken as grab samples.

D. Additional Monitoring/Reporting Requirements. The Discharger shall conduct the monitoring and reporting in accordance with the General Monitoring Provisions and Reporting Requirements in Attachment E.

Table I-1. Priority Pollutants

CTR #	Constituent	CAS Number	Maximum Reporting Levels µg/L or noted
28	1,1-Dichloroethane	75343	1
30	1,1-Dichloroethene	75354	0.5
41	1,1,1-Trichloroethane	71556	2
42	1,1,2-Trichloroethane	79005	0.5
37	1,1,2,2-Tetrachloroethane	79345	0.5
75	1,2-Dichlorobenzene (volatile)	95501	2
75	1,2-Dichlorobenzene (semivolatile)	95501	2
29	1,2-Dichloroethane	107062	0.5
	cis-1,2-Dichloroethene	156592	--
31	1,2-Dichloropropane	78875	0.5
101	1,2,4-Trichlorobenzene	120821	1
76	1,3-Dichlorobenzene (volatile)	541731	2
76	1,3-Dichlorobenzene (semivolatile)	541731	2
32	1,3-Dichloropropene (volatile)	542756	0.5
77	1,4-Dichlorobenzene (volatile)	106467	2
77	1,4-Dichlorobenzene (semivolatile)	106467	2
17	Acrolein	107028	2
18	Acrylonitrile	107131	2
19	Benzene	71432	0.5
20	Bromoform	75252	2
34	Bromomethane	74839	2
21	Carbon tetrachloride	56235	0.5
22	Chlorobenzene (mono chlorobenzene)	108907	2
24	Chloroethane	75003	2
25	2- Chloroethyl vinyl ether	110758	1
26	Chloroform	67663	2
35	Chloromethane	74873	2
23	Dibromochloromethane	124481	0.5
27	Dichlorobromomethane	75274	0.5
36	Dichloromethane	75092	2
33	Ethylbenzene	100414	2
88	Hexachlorobenzene	118741	1

CTR #	Constituent	CAS Number	Maximum Reporting Levels µg/L or noted
89	Hexachlorobutadiene	87683	1
91	Hexachloroethane	67721	1
94	Naphthalene	91203	10
38	Tetrachloroethene	127184	0.5
39	Toluene	108883	2
40	trans-1,2-Dichloroethylene	156605	1
43	Trichloroethene	79016	2
44	Vinyl chloride	75014	0.5
	Methyl-tert-butyl ether (MTBE)	1634044	--
	Trichlorofluoromethane	75694	--
	1,1,2-Trichloro-1,2,2-Trifluoroethane	76131	--
	Styrene	100425	--
	Xylenes	1330207	--
60	1,2-Benzanthracene	56553	5
85	1,2-Diphenylhydrazine	122667	1
45	2-Chlorophenol	95578	5
46	2,4-Dichlorophenol	120832	5
47	2,4-Dimethylphenol	105679	2
49	2,4-Dinitrophenol	51285	5
82	2,4-Dinitrotoluene	121142	5
55	2,4,6-Trichlorophenol	88062	10
83	2,6-Dinitrotoluene	606202	5
50	2-Nitrophenol	25154557	10
71	2-Chloronaphthalene	91587	10
78	3,3'-Dichlorobenzidine	91941	5
62	3,4-Benzofluoranthene	205992	10
52	4-Chloro-3-methylphenol	59507	5
48	4,6-Dinitro-2-methylphenol	534521	10
51	4-Nitrophenol	100027	10
69	4-Bromophenyl phenyl ether	101553	10
72	4-Chlorophenyl phenyl ether	7005723	5
56	Acenaphthene	83329	1
57	Acenaphthylene	208968	10
58	Anthracene	120127	10
59	Benzidine	92875	5
61	Benzo(a)pyrene (3,4-Benzopyrene)	50328	2

CTR #	Constituent	CAS Number	Maximum Reporting Levels µg/L or noted
63	Benzo(g,h,i)perylene	191242	5
64	Benzo(k)fluoranthene	207089	2
65	Bis(2-chloroethoxy) methane	111911	5
66	Bis(2-chloroethyl) ether	111444	1
67	Bis(2-chloroisopropyl) ether	39638329	10
68	Bis(2-ethylhexyl) phthalate[1]	117817	5
70	Butyl benzyl phthalate	85687	10
73	Chrysene	218019	5
81	Di-n-butylphthalate	84742	10
84	Di-n-octylphthalate	117840	10
74	Dibenzo(a,h)-anthracene	53703	0.1
79	Diethyl phthalate	84662	10
80	Dimethyl phthalate	131113	10
86	Fluoranthene	206440	10
87	Fluorene	86737	10
90	Hexachlorocyclopentadiene	77474	5
92	Indeno(1,2,3-c,d)pyrene	193395	0.05
93	Isophorone	78591	1
98	N-Nitrosodiphenylamine	86306	1
96	N-Nitrosodimethylamine	62759	5
97	N-Nitrosodi-n-propylamine	621647	5
95	Nitrobenzene	98953	10
53	Pentachlorophenol	87865	1
99	Phenanthrene	85018	5
54	Phenol	108952	50
100	Pyrene	129000	10
	Aluminum	7429905	--
1	Antimony	7440360	0.5
2	Arsenic	7440382	1
15	Asbestos	1332214	--
	Barium	7440393	--
3	Beryllium	7440417	0.5
4	Cadmium	7440439	0.25
5a	Chromium (total)	7440473	0.5
5b	Chromium (VI)	18540299	10
6	Copper	7440508	2

CTR #	Constituent	CAS Number	Maximum Reporting Levels µg/L or noted
14	Cyanide	57125	5
	Fluoride	7782414	--
	Iron	7439896	--
7	Lead	7439921	0.5
8	Mercury	7439976	0.2
	Manganese	7439965	--
	Molybdenum	7439987	--
9	Nickel	7440020	1
10	Selenium	7782492	1
11	Silver	7440224	0.25
12	Thallium	7440280	1
	Tributyltin	688733	--
13	Zinc	7440666	1
110	4,4'-DDD	72548	0.05
109	4,4'-DDE	72559	0.05
108	4,4'-DDT	50293	0.01
112	alpha-Endosulfan	959988	0.02
103	alpha-Hexachlorocyclohexane (BHC)	319846	0.01
	Alachlor	15972608	--
102	Aldrin	309002	0.005
113	beta-Endosulfan	33213659	0.01
104	beta-Hexachlorocyclohexane	319857	0.005
107	Chlordane	57749	0.1
106	delta-Hexachlorocyclohexane	319868	0.005
111	Dieldrin	60571	0.01
114	Endosulfan sulfate	1031078	0.05
115	Endrin	72208	0.01
116	Endrin Aldehyde	7421934	0.01
117	Heptachlor	76448	0.01
118	Heptachlor Epoxide	1024573	0.01
105	Lindane (gamma-Hexachlorocyclohexane)	58899	0.02
119	PCB-1016	12674112	0.5
120	PCB-1221	11104282	0.5
121	PCB-1232	11141165	0.5
122	PCB-1242	53469219	0.5
123	PCB-1248	12672296	0.5

CTR #	Constituent	CAS Number	Maximum Reporting Levels µg/L or noted
124	PCB-1254	11097691	0.5
125	PCB-1260	11096825	0.5
126	Toxaphene	8001352	0.5
	Atrazine	1912249	--
	Bentazon	25057890	--
	Carbofuran	1563662	--
	2,4-D	94757	--
	Dalapon	75990	--
	1,2-Dibromo-3-chloropropane (DBCP)	96128	--
	Di(2-ethylhexyl)adipate	103231	--
	Dinoseb	88857	--
	Diquat	85007	--
	Endothal	145733	--
	Ethylene Dibromide	106934	--
	Glyphosate	1071836	--
	Methoxychlor	72435	--
	Methylene Blue Activated Substances (MBAS)	--	--
	Molinate (Ordram)	2212671	--
	Oxamyl	23135220	--
	Picloram	1918021	--
	Simazine (Princep)	122349	--
	Thiobencarb	28249776	--
	2,4,5-TP (Silvex)	93765	--
	Diazinon	333415	--
	Chlorpyrifos	2921882	--
	Ammonia (as N)	7664417	--
	Chloride	16887006	--
	Flow	--	--
	Hardness (as $CaCO_3$)	--	--
	Nitrate (as N)	14797558	--
	Nitrite (as N)	14797650	--
	pH	--	--
	Phosphorus, Total (as P)	7723140	--
	Specific conductance (EC)	--	--
	Sulfate	--	--
	Sulfide (as S)	--	--

CTR #	Constituent	CAS Number	Maximum Reporting Levels µg/L or noted
	Sulfite (as SO_3)	--	--
	Temperature	--	--
	Total Dissolved Solids (TDS)	--	--

[1] Sampling and analysis of bis (2-ethylhexyl) phthalate shall be conducted using ultra-clean techniques that reduce the possibility of sample contamination. The Discharger has agreed to contract a laboratory to analyze bis (2-ethylhexyl) phthalate at levels below the Reporting Level in Appendix 4 of the SIP.