California Regional Water Quality Control Board
Lahontan Region

Linda S. Adams
Secretary for
Environmental Protection

2501 Lake Tahoe Boulevard, South Lake Tahoe, California 96150
(530) 542-5400 • Fax (530) 544-2271
www.waterboards.ca.gov/lahontan

Arnold Schwarzenegger
Governor

June 12, 2009

EVANS, DAVE M
714-850 CAROLYN WAY
JANESVILLE CA 96114

CERTIFIED MAIL:
7007 3020 0001 0921 1649

CEASE AND DESIST ORDER NO. R6T-2009-PROPOSED

REQUIRING EVANS, DAVE M, APN NO. 077-351-28-11 TO CEASE AND DESIST FROM DISCHARGING OR THREATENING TO DISCHARGE WASTE IN VIOLATION OF A DISCHARGE PROHIBITION SPECIFIED BY THE *WATER QUALITY CONTROL PLAN FOR THE LAHONTAN REGION*; SPALDING TRACT SUBDIVISION, EAGLE LAKE BASIN, LASSEN COUNTY

Enclosed is the above-referenced proposed Cease and Desist Order. The Cease and Desist Order is being issued in response to evidence that EVANS, DAVE M is, at a minimum, threatening to discharge waste in violation of a discharge prohibition specified by the *Water Quality Control Plan for the Lahontan Region* (Basin Plan). The enclosed proposed Cease and Desist Order is being provided for your review and comment.

To ensure the Lahontan Water Board has the opportunity to fully consider written comments, all comments must be submitted in accordance with the deadlines identified in the hearing procedures that will be sent to you in the next few days under separate cover. Written objections and materials submitted after the deadlines specified in the hearing procedures will not be accepted, except at the discretion of the Lahontan Water Board Chair. Untimely written material or objections will not be accepted or incorporated into the record if doing so would prejudice the Water Board or any Designated Party. The Chair may choose to modify this rule upon a showing of severe hardship. (Cal Code Regs., title 23, sections 648.1 and 648.4.) Any person seeking to submit late written materials must justify why the materials could not have been submitted earlier.

Contact Taylor Zentner at (530) 542-5469 or me at (530) 542-5432 if you have any questions regarding this matter.

Scott C. Ferguson, Chief
Enforcement and Special Projects Unit

Enclosure

cc: Doug Ames/Lassen County Environmental Health Department
Merle Lay/Spalding Community Service District
David Boyers/State Water Resources Control Board, Office of Enforcement
Cris Carrigan/State Water Resources Control Board, Office of Enforcement
David Coupe/ State Water Resources Control Board, Office of Chief Counsel
Harold J. Singer/Lahontan Regional Water Quality Control Board
Scott Ferguson/ Lahontan Regional Water Quality Control Board
Chuck Curtis/ Lahontan Regional Water Quality Control Board
Robert Dodds/ Lahontan Regional Water Quality Control Board
Taylor Zentner/ Lahontan Regional Water Quality Control Board

TBZ/clhT: Spalding Tract CDO Transmittal Letter, 6-2-2009, TBZ,clc.doc

CALIFORNIA REGIONAL WATER QUALITY CONTROL BOARD
LAHONTAN REGION

CEASE AND DESIST ORDER NO. R6T-2009-PROPOSED

REQUIRING EVANS, DAVE M, APN NO. 077-351-28-11TO CEASE AND DESIST FROM DISCHARGING OR THREATENING TO DISCHARGE WASTE IN VIOLATION OF DISCHARGE PROHIBITION SPECIFIED BY THE *WATER QUALITY CONTROL PLAN FOR THE LAHONTAN REGION*; SPALDING TRACT SUBDIVISION, EAGLE LAKE BASIN

Lassen County

The California Regional Water Quality Control Board, Lahontan Region (Water Board) finds:

1. EVANS, DAVE M, (hereafter "Discharger") own(s) Assessor Parcel No. 077-351-28-11 in the Spalding Tract subdivision located on the west shore of Eagle Lake, approximately 20 miles northwest of Susanville, California. See Attachment A – Vicinity Map, which is made a part of this Order.

2. The Discharger owns and/or operate(s) an on-site wastewater disposal system located at the above-referenced parcel. The existence of an on-site wastewater disposal system that has not been properly abandoned at this location permits waste to be discharged, and/or threatens a discharge of waste, to waters within the Eagle Lake Basin.

3. In September 1984, the Water Board amended the Water Quality Control Plan for the Lahontan Region (Basin Plan) to prohibit the discharge of sewage to on-site wastewater disposal systems in the Spalding Tract after September 14, 1989. In pertinent part, the Basin Plan prohibition states:

   "The discharge of waste from the Spaulding [sic] or Stones-Bengard subdivisions with other than a zero discharge of nutrients to any surface waters or ground waters in the Eagle Lake basin is prohibited after September 14, 1989." (Basin Plan, Chapter 4, *Implementation*, Unit/Area-Specific Prohibitions for the Eagle Drainage Hydrologic Area at p. 4.1-4.)

4. In 1991, the Water Board issued Cease and Desist Orders to the Spalding Tract property owners requiring that they cease and desist from discharging wastes in violation of the Basin Plan prohibition.

PROPOSED

5. The Water Board did not pursue enforcement of the Cease and Desist Orders issued in 1991 because there was no readily available means by which the Spalding Tract property owners could comply with the Basin Plan prohibition.

6. On October 22, 2007, the District's community wastewater system (system) became operational. As a result, there is now an available method for the Spalding Tract property owners to comply with the Basin Plan prohibition.

7. On June 25, 2008, the Water Board issued the Spalding Tract property owners[7] an Order to Submit a Technical Report pursuant to California Water Code section 13267 (13267 Order). The 13267 Order required the property owners to provide, by August 29, 2008, information demonstrating that the owner:

   a. planned to connect to the District's system;
   b. had already connected to the District's system;
   c. planned to abandon their on-site wastewater disposal system; or
   d. did not have an on-site wastewater disposal system.

   The 13267 Order also informed property owners that the Water Board would consider them in compliance with the 13267 Order and the Basin Plan prohibition if by November 15, 2008, the property owners had connected to the District's system, properly abandoned their on-site wastewater disposal system, or demonstrated that there was no on-site wastewater disposal system on their parcel(s).

8. Based upon a review of Lassen County records (Attachment B of this Order), the Discharger has an on-site wastewater disposal system located on the parcel referenced in Finding No. 1, above. Additionally, based upon a review of District records (Attachment C of this Order), the Discharger has not connected to the District system. The Water Board has also not received information from Lassen County indicating that the Discharger has properly abandoned its on-site wastewater disposal system. Therefore, the Water Board finds that, at a minimum, the Discharger is threatening to discharge waste in violation of the Basin Plan prohibition described in Finding No. 3, above.

9. Water Code section 13301 states, in part:

   "When a Regional Board finds that a discharge of waste is taking place, or threatening to take place, in violation of requirements or discharge prohibitions prescribed by the regional board or the state board, the [regional] board may issue an order to cease and desist and direct that those persons not complying

[7] Orders for a Technical Report were sent to property owners where Lassen County Assessor records documented that the property owners' parcels had improvements that may include on-site wastewater disposal systems, and the parcel was not connected to the community wastewater system.

with the requirements or discharge prohibitions (a) comply forthwith, (b) comply in accordance with a time schedule set by the [regional] board, or (c) in the event of a threatened violation, take appropriate remedial or preventative action."

10. As noted in Finding No. 8, above, the Discharger, at a minimum, is threatening to discharge waste in violation of the Basin Plan prohibition described in Finding No. 3, above. Therefore, the Water Board is authorized to issue a Cease and Desist Order for the threatened discharge pursuant to Water Code section 13301.

11. The Water Board is issuing new Cease and Desist Orders to all Spalding Tract property owners that have an on-site wastewater disposal system and have not either connected to the District's system or properly abandoned their on-site wastewater disposal system. The Discharger is such a property owner as identified in Finding No. 8, above. The new Cease and Desist Orders reflect current property ownership and the availability of the District's system as a means of compliance, and establish a new compliance schedule.

12. The Water Board has already rescinded many of the 1991 Cease and Desist Orders, based upon compliance with the Basin Plan prohibition and change in ownership that has occurred since issuing the 1991 Cease and Desist Orders. Even though the Discharger has not complied with its 1991 Cease and Desist Order, this Cease and Desist Order rescinds the 1991 Cease and Desist Order issued to the Discharger. The purpose of rescinding the 1991 Cease and Desist Order and issuing a new one is to establish a new compliance schedule consistent with the schedule being established for all other Spalding Tract property owners that continue to have an on-site wastewater disposal system, and have not either connected to the District's system or properly abandoned their on-site wastewater disposal system.

13. Water Code section 13267, subdivision (b) states:

"In conducting an investigation specified in subdivision (a), the regional board may require that any person who has discharged, discharges, or is suspected of having discharged or discharging, or who proposes to discharge waste within its region, or any citizen or domiciliary, or political agency or entity of this state who has discharged, discharges, or is suspected of having discharged or discharging, or who proposes to discharge, waste outside of its region that could affect the quality of the waters within its region shall furnish, under penalty of perjury, technical or monitoring program reports which the regional board requires. The burden, including costs, of these reports shall bear a reasonable relationship to the need for the report and the benefits to be obtained from the reports. In requiring these reports, the regional board shall provide the person with a written explanation with regard to the need for the reports, and shall identify the evidence that supports requiring that person to provide the reports."

14. The technical reports required by this Order are necessary to ensure compliance with the discharge prohibition described in Finding No. 3, above, and this Cease and Desist Order, as well as to ensure protection of waters of the state, and to protect public health and the environment. The burden, including costs, of the reports required by this Order bear a reasonable relationship to the need for the reports and the benefits to be obtained therefrom.

15. The Water Board notified the Discharger and interested persons of its intent to consider adoption of this Cease and Desist Order, and provided an opportunity to submit written comments and appear at a public hearing. The Water Board, in a public hearing, heard and considered all comments.

16. Issuance of this Order is exempt from the provisions of the California Environmental Quality Act (Public Resources Code, Section 21000, et seq.), in accordance with Section 15321(a)(2), Title 14, California Code of Regulations.

17. Any person aggrieved by this action of the Regional Water Board may petition the State Water Board to review the action in accordance with Water Code section 13320 and California Code of Regulations, title 23, sections 2050 and following. The State Water Board must *receive* the petition by 5:00 p.m., 30 days after the date of this Order, except that if the thirtieth day following the date of this Order falls on a Saturday, Sunday, or state holiday, the petition must be received by the State Water Board by 5:00 p.m. on the next business day. Copies of the law and regulations applicable to filing petitions may be found on the Internet at: http://www.waterboards.ca.gov/public_notices/petitions/water_quality or will be provided upon request.

THEREFORE, IT IS HEREBY ORDERED that, pursuant to Water Code sections 13301 and 13267, the Discharger shall cease and desist from discharging wastes or threatening to discharge wastes, in violation of the Basin Plan prohibition and shall comply with the other provisions of this Order:

1. Cease and Desist Order Number 6-91-415 is hereby rescinded.

2. By **December 31, 2009**, the Discharger must complete one of the following:

   a. Connect to the District's system.

   b. Abandon the on-site wastewater disposal system on the Discharger's property, Assessor Parcel No. 077-351-28-11

3. By **January 15, 2010**, the Discharger must complete one of the following:

a. If the Discharger has connected to the District's system, pursuant to option 2.a., above, the Discharger must request, both orally and in writing, that the District include its property on the list of properties connected to the District's system. The District's contact information is as follows:

Spalding Community Services District
502-907 Mahogany Way
Susanville, CA 96130
(530) 825-3258

The Water Board must be copied on the written request, attention Taylor Zentner. Compliance with this provision will be determined by the Water Board through a review of the District's list.

b. If the Discharger has abandoned the on-site waste disposal system, pursuant to option 2.b., above, the Discharger must request, both orally and in writing, that the Lassen County Environmental Health Department (County) inspect the Discharger's property to verify that the on-site waste disposal system has been abandoned. The County's contact information is as follows:

Lassen County Environmental Health
1445 Paul Bunyan Road
Susanville, CA 96130
(530) 251-8528

The Water Board must be copied on the written request, attention Taylor Zentner. Additionally, the Discharger shall provide the Water Board with a "Certification of Abandonment" provided by the County.

c. Provide a technical report (form included as Attachment D of this Order) documenting that the Discharger's property does not have an on-site wastewater disposal system. The report must include all information necessary to assist the Water Board in verifying the parcel number, street address, and the exact location of the Discharger's property, and any improvements to the property. The Discharger must provide written consent to allow Water Board staff to enter the Discharger's property for the purpose of verifying the absence of on-site wastewater disposal systems. If the Discharger wishes to be present during the inspection, the Discharger is requested to provide their contact information or the contact information of the person they wish to be present during the inspection. Contact information must include: name, mailing address, physical address of Spalding Tract property, phone number(s), and email address, if any.

4. The information required in paragraphs 3.a. through 3.c., above, is required to be provided pursuant to Water Code section 13267 (see Attachment E – Water Code

section 13267 Fact Sheet), and is necessary to ensure that the person or persons to whom this Order is issued have taken appropriate action to abate the discharge, and/or threatened discharge, of waste in violation of the Basin Plan prohibition.

Failure to comply with the terms or conditions of this Cease and Desist Order will result in additional enforcement action, which may include the imposition of administrative civil liability pursuant to Water Code sections 13350 and/or 13268, or referral to the Attorney General of the State of California for such legal action as he may deem appropriate.

I, Harold J. Singer, Executive Officer, do hereby certify that the foregoing is a full, true, and correct copy of an Order adopted by the California Regional Water Quality Control Board, Lahontan Region on September 9, 2009.

_____
HAROLD J. SINGER
EXECUTIVE OFFICER

Attachment A: Vicinity Map
Attachment B: Lassen County Records for Lassen County Assessor Parcel No. 077-351-28-11
Attachment C: District Records
Attachment D: Technical Report Form – No On-site Waste Disposal Certification
Attachment E: Water Code section 13267 Fact Sheet

TBZ/clhT: Spalding Tract-CDO (Includes Resc), 6-3-2009, TBZ,SCF,rd.doc

PROPOSED

ATTACHMENT A

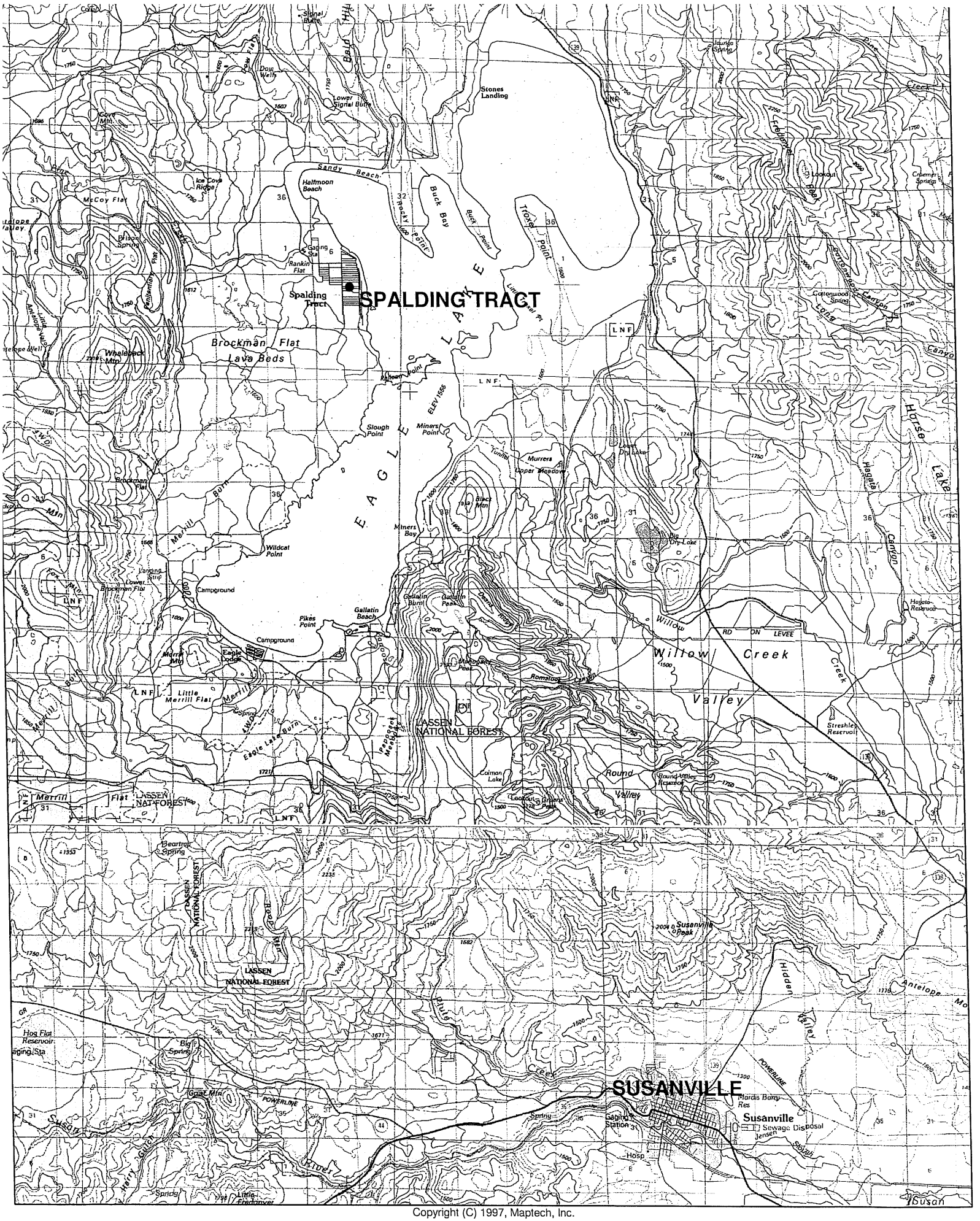
SPALDING TRACT
SUSANVILLE
EAGLE LAKE
Spalding Tract
Brockman Flat Lava Beds
Stones Landing
Halfmoon Beach
Sandy Beach
Buck Bay
Buck Point
Trixie Point
Rankin Flat
Slough Point
Miners Point
Miners Bay
Wildcat Point
Campground
Pikes Point
Gallatin Beach
Eagle Lodge
Little Merrill Flat
Merrill Flat
Eagle Lake Burn
Merrill Burn
Brockman Flat
Lower Brockman Flat
Landing Strip
Whaleback Mtn
Black Mtn
Gallatin Peak
Manzanita Peak
Romaine Lookout
Coleman Lake
Round Valley Reservoir
Round Valley
Willow Creek
Willow Creek Valley
Willow Creek RD ON LEVEE
Streshley Reservoir
Hallelujah Reservoir
Big Dry Lake
Lower Dry Lake
Murrera Upper Meadow
Horse Lake
Cottonwood Spring
Cottonwood Canyon
Lookout
Susanville Creek
Susanville Sewage Disposal
Mardis Bonz Res
Jensen
Hospital
Sagging Station
Hog Flat Reservoir
Big Spring
Great Mtn
Beartrap Spring
Little Fredonyer
Hairy Creek
Antelope Mountain
Hilsden Valley
Powerline
LASSEN NATIONAL FOREST
LNF
Copyright (C) 1997, Maptech, Inc.

ATTACHMENT B

ATTACHMENT B

LASSEN COUNTY PROPERTY APPRAISAL RECORD

Subject to Limiting Conditions as per Policy Letter of 03-01-89

Parcel: [redacted]

Owner: [redacted] Location: [redacted] Use Code: RIXX

Address: [redacted] Acreage: [redacted] Sheet [redacted] of [redacted]

USE: Single Modern Conventional Multiple Com./Ind. Vacant Zoning: [redacted]

ASSESSMENT YEAR	1991	1992	19	19	19	19	19	19	19
Appraiser & Date	DG. 1-4-90	DG. 10-7-91							
Appraiser Code	25-4	35-4							
Roll Land Value	6764								
Roll Imp. Value	[redacted]								
Homeowners' Exempt.									
Personal Property									
Fixtures									
Last Appr. L. Value									
Last Appr. I. Value									
L.Value TB Factored	6764	6899							
I.Value TB Factored	4302	4888							
New Land Value	6764	6899							
New Imp. Value	4802	4888							
Sale Date									
Construction Date									
Supplemental Land									
Supplemental Imp.									
TOTAL SUPPLEMENTAL									
Date Punched	1-21-91	10-22-91							
Record Number									

#5

LCAO 10

1986-S

77-350-9, 10, 26 Combined to form

88. 77-350-28 Sold 6-16-86 For $6250 S.A.F.

Unable to Find Appraisals for 9, 10, 26 if any

Top sheets were ever wide out?

09 1285

10 1285

86 1872

4442

1988

Picked up Septic + power

87 Land 6375

87 Imps 0

89 Imps 2200

1989 Picked up Storage Shed as part of unit. Cost $500.

88 Land 6502

88 Imps 2300 = 2800

89 Imps 500

1990 Picked up 24x40 and pumphouse 50% complete 3-1-90

89 Land 6632

87 Imps 2846 = 2846

90 PC Imps 1400+200 =

LASSEN COUNTY HEALTH DEPARTMENT

HOSPITAL LANE • SUSANVILLE, CA 96130 • PHONE (916) 257-8311 ext 183

APPLICATION FOR SEWAGE DISPOSAL PERMIT

To be completed by Owner or Authorized Agent. Permit Expires One Year From Date of Issue

Name Dave Evans (Buyer) Mailing Address _____ Phone _____

Installed by: Gary Mueller Co. Location of Property ~~Forestry~~ Hemlock Way

Assessor parcel No. 77-351-9,10,26

Subdivision Spaldings Unit _____ Block 65 Lot 1,2,3,4,5,6 Lot Size 13,800 Sq ft.

Type Premise: Dwelling _____ Mobile Home X Commercial or other (specify) _____

Total Number: Living Units 1 Bedrooms 1 Baths 1

Water Supply: Public (specify) _____ Private (Type) Proposed well

SEWAGE DISPOSAL SYSTEM REQUIREMENTS

HEALTH DEPT. USE ONLY

Percolation Test Yes ✓ No ____ Results 25 AVG min/in Date 5-21-86 Performed by: G. Mueller

Septic Tank: Size 1000 Gals. Material F. GLASS Distance from Well ~~100~~ 50± Feet

Sewage Disposal Field: Distance from Well 100 Feet Distance from Water Sources N/A Feet

Length Each Line 100 Feet Distance from Lot Line 15 Feet

Total Length of Leach Lines 100 Feet Distance from Cen. County Road ~~150~~ Feet

Width of Trench 2 Feet Distribution Box Yes ____ No ✓

Depth of Trench BEGINNING 3 END 5 Feet

Depth of Gravel Beneath Leach Pipe 12 Inches Depth of Gravel Over Leach Pipe 2 Inches

Note: All Leach Lines must be installed level. Leach Gravel must be Graded 1½-3 inches and washed.

PROVIDE SCALED PLOT PLAN Scale 1" = 30'

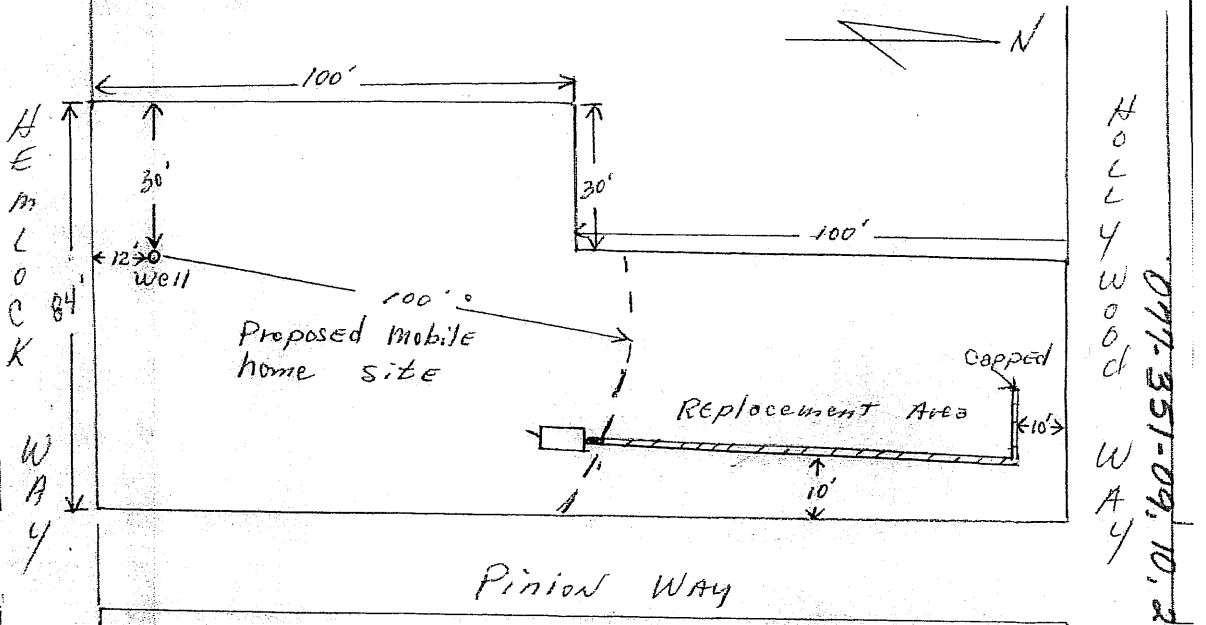

Indicate Northerly Direction

077-351-09, 10, 26 EVANS

I hereby certify that I have prepared this application and that the installation will be done and inspected in accordance with Lassen County Ordinances and State Laws.

Signed [signature] Title Contractor Date 5/21/86

DO NOT FILL IN BELOW THIS LINE

NOTE: APPROVAL OF THE HEALTH DEPARTMENT IS NOT A GUARANTEE THAT THE PROPOSED INSTALLATION WILL OPERATE SUCCESSFULLY, BUT MERELY THAT THE SYSTEM MEETS THE MINIMUM REQUIREMENTS OF THE HEALTH DEPARTMENT.

PERMIT NO. 0305-6

Issued by: Jim L. Hall, Sanitarian Date 6-19-86

Final Inspection by: Doug Imus, Sanitarian Date 10/13/87

Remarks *SIZED FOR 2 BDRM UNIT

PERCOLATION TEST PROCEDURE — LASSEN COUNTY HEALTH DEPARTMENT

D. Evans

The object in conducting percolation tests of soil in which a drainfield or seepage pit is to be installed, is to determine the length of time required for the soil to absorb one inch of water when the ground has been saturated. The information obtained from these tests, together with a knowledge of the approximate amount and type of sewage to be discharged, makes it possible to determine the size of the drainfield necessary for a trouble free system.

Holes approximately 4 to 6 inches in diameter have been found to be the most convenient. However, this diameter is not critical and, particularly in very loose soils, it may be easier to dig larger holes. Sides of the holes should be vertical and the depth should be approximately that of the proposed drainfield (36"). The holes (2 or more) should be approximately 30 feet apart and in the area where the drainfield will be installed.

1. The sides should be roughed up to eliminate packing caused by the shovel or post hole digger, which would reduce the percolation rate. Two inches of fine gravel should be placed in the hole to prevent bottom scoring.

2. Fill the hole with clear water, being careful to avoid washing down the sides of the hole. By refilling if necessary, keep at least 24 inches of water in the hole for at least 24 hours. After the above saturation, start with 6 inches of water above the gravel (add water if necessary) and begin the measurements.

3. Select a reference point from which to measure (a board laid across the mouth of the hole is satisfactory) and measure the distance from the reference point to the level of the water. Enter the time and distance measured on the chart below.

4. Repeat the measurement at the end of 30 minutes. Continue making measurements at 30 minute intervals for 4 hours.

5. If the water level drops too low for further readings, refill to the 6 inch level at the end of a 30 minute period, measure, and proceed as before.

6. If the hole consistently drains in less than 30 minutes, make readings at 10 minute intervals for 1 hour.

The California State Housing Law requires that the proposed installation will absorb a quantity of clear water in a twenty-four (24) hour period equal to at least five (5) times the liquid capacity of the septic tank.

12 MIN INCH
5 | 60

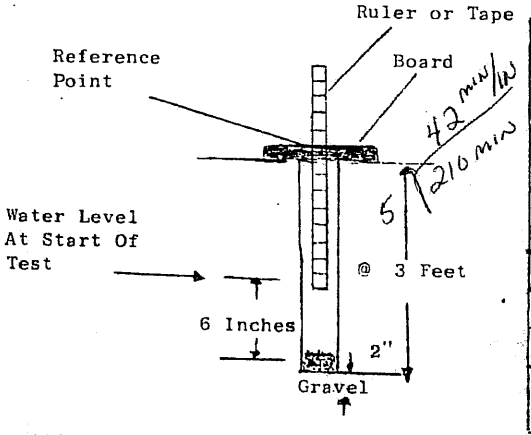

90 MIN

PERCOLATION TESTS RESULTS			
HOLE #1 56"		Hole #2 37"	
Time	Depth To Water	Time	Depth To Water
10:05	48"	10:05	31¼"
10:35	49"	10:35	34"
11:05	49¾"	10:45	35"
11:35	50¼"	10:55	35¾"
12:05	50¾"	11:05	36¼"
12:35	51½"	11:15	37"
1:05	52¼"	11:25	31½"
1:35	53"	11:35	32"

Changed To 10 MIN

DRY REFILL

I hereby certify that the above percolation tests were done in accordance with the instructions and the results recorded here are true and correct.

5/21/86
Date

Signature of Person Conducting Test

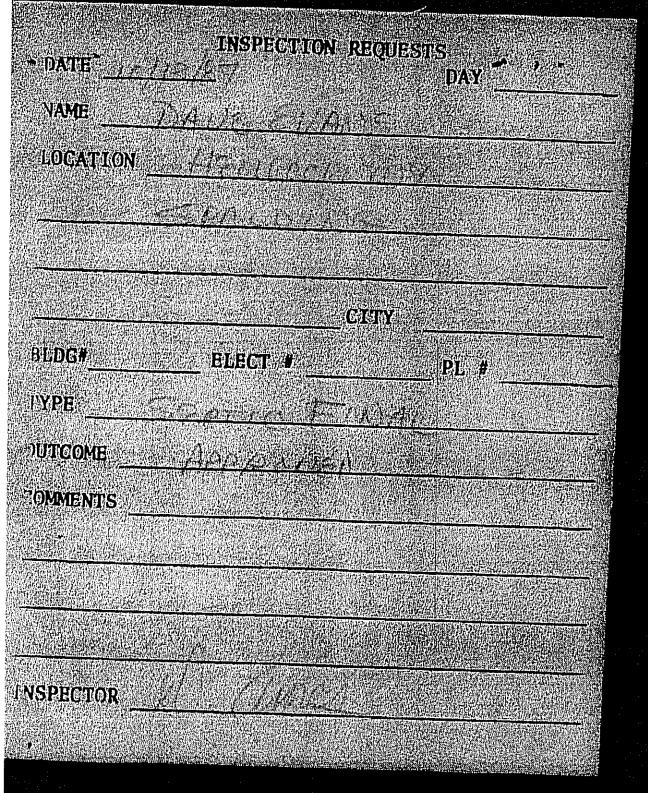

INSPECTION REQUESTS

DATE [illegible] DAY

NAME [illegible]

LOCATION [illegible]

[illegible]

CITY

BLDG# ELECT # PL #

TYPE [illegible]

OUTCOME [illegible]

COMMENTS

INSPECTOR [illegible]

ATTACHMENT C

	DATE OF HOOKUP	Disposal System APPLICANT NAME	SERVICE ADDRESS	APN#	ASS#	Prorated Days
2	3-Apr-08	Adams Family Trust	Laurel Way	077-343-17	586	28
3	1-Aug-08	Adams Family Trust Agreement	687-285 Juniper	077-354-25	620	31
4	9-Jun-08	Aguiano, Jose R ETAL	Magnolia Way	077-334-13	512	22
5	4-Jun-08	Allen,Glen & Ida Rev. Trust	686-730 Catalpa	077-374-19	829	27
6	31-Jul-08	Alvarez Charles R.	688-100 Ivy Way	077-221-16	301	1
7	6-Aug-08	Aman, Lisa Marie	503-555 Mahogany Way	077-301-23	471	26
8	2-Nov-07	Anderson, Christopher J./J.A	687-815 Cedar Way	077-283-24	485	29
9	14-Apr-08	Anderson, Dale A& Virginia A Revoc. Trust	687-590 Hazel	077-331-30	546	17
10	18-Mar-08	Anderson, James L/Sherri A CP	Hazel/Maple	077-211-19	235	14
11	30-May-08	Anderson, Lee A Faye Z. JT.	686-855 Acorn Way	077-392-14	1002	2
12	8-May-08	Armstrong Family Trust	687-450 Magnolia Way	077-334-21	515	24
13	24-Sep-08	Armstrong Living Trust	687-384 Sycamore	077-311-45	666	7
14	22-Apr-08	Armstrong, Dale A.& Myrna A.	688-050 Sycamore	077-241-20	396	9
15	11-Jun-08	Armstrong, Robert T/Mabel E	688-035 Laurel Way	077-223-21	263	20
16	16-May-08	Arnold, Michael Wayne/Katherine Diane Rev TR	RV Park - The Strand	077-182-09	167	16
17	2-Nov-07	Arons, Gerald J/Louise C	502-630 Mahogany Way	077-234-36	254	29
18	24-Oct-07	Atteberry David Ned & Vera Louse Jt.	686-930 Cherry Way	077-371-19	871	7
19	17-Apr-08	Atteberry, Harley/Lawanda	686-765 Fir Way	077-383-39	908	14
20	6-Oct-08	Baer Ronald L. & Scott-Baer, Daleen E.	Juniper	077-231-26	308	26
21	8-Dec-08	Bailey, Irene	687-725 Hazel Way	077-234-41	252	**24**
22	5-Sep-08	Baker, Joseph A. & Donna G.	686-905 Sycamore Way	077-402-14	797	26
23	12-Feb-08	Baker, Joseph A. & Donna G. JT.	686-905 Sycamore Way	077-402-23	788	18
24	9-May-08	Baker, Victor O./ Marguerite J.	687-010 Hollywood Way	077-363-18	766	23
25	31-Mar-08	Ballard, Richard H & Bobbie L	687-760Laurel Way	077-233-56	271	1
26	2-Dec-08	Barnes Family Trust Agreement	687-870 Junper Way	077-232-33	295	29
27	2-Jun-08	Barnett Stephen R. & Joann W.	687-100 Bamboo Way	077-397-31	966	29
28	8-Apr-08	Barris, Patrick H/Gloria J.T.	Walnut Way	077-171-35	137	23
29	7-Oct-08	Barrows, Donald A/Barrows, Linda K TC	687-115 Cherry Way	077-388-23	884	25
30	12-Aug-08	Bateson, Clarence Owen/Susan Elizabeth	687-560 Fir Way	077-292-09	509	20
31	5-Aug-08	Bechhold Family Trust	The Strand/Hollwood Way	077-241-11	383	27
32	15-Apr-08	Beck Ronald N. & Gwen M JT.	686-840 Redwood Way	077-401-20	815	16
33	25-Sep-08	Beckett Family Living Trust	686-830 Cataipa	077-374-27	826	6
34	16-Sep-08	Beckett Family Living Trust	686-775 Cataipa	077-373-21	840	15
35	19-May-08	Beckett Family Living Trust	686-755 Cataipa	077-373-18	841	13
36	10-Jul-08	Beckman, Ronald G/Natalie J JT	687-100 Delwood	077-386-12	915	22
37	9-Oct-08	Belingheri Dennis D. & Stacy & Ziegler Paul M. JT.	688-090 Linden Way	077-223-24	273	23
38	18-Jun-08	Bemus Joseph M.& Susan C. CP.	686-855 Catalpa	077-373-20	838	13
39	14-Oct-08	Bennett, Thomas Lee/Bennett, Robin Rae	686-825 Sycamore Way	077-402-20	790	18
40	9-Jul-08	Bergthhold, Robert D/Terri HW	687-840 Almond	077-174-27	78	23
41	12-Aug-08	Betts, F Gregory/Doris B Family Trust	Walnut Way	077-161-22	121	20
42	27-Mar-08	Blackwell, Glenn R/Jeanette JR	687-130 Linden	077-342-16	603	5
43	29-Oct-08	Bloom, Kennieth D/Janis ETAL	687-285 Hickory	077-352-17	721	3
44	11-Jun-08	Bollmann Richard M & Jaque A. JT.	686-835 Delwood Way	077-381-17	942	20
45	28-May-08	Bonvicina Family Trust	Cedar Way	077-283-22	487	4
46	6-Jul-08	Boucher Family Trust	687-745 Tulip Way	077-194-42	148	26
47	21-Jul-08	Bowman, Joe E ETAL	687-740 Lakeview Dr.	077-274-31	411	11
48	18-Sep-08	Boyles Valton	688-040 Manzanito Way	077-141-15	42	13
49	6-Oct-08	Brazil, Joseph Souza/Velma Lee Living Trust	687-675 Orchard Way	077-214-28	192	**26**
50	6-Jun-08	Brazil, Larry E	387-920 Hollywood Way	077-312-06	652	25
51	21-Jul-08	Bresin Family Revocable Living Trust	Chinquepin	077-204-06	194	11
52	13-Aug-08	Bricker Living Trust	687-015 Catalpa Way	077-377-15	834	19
53	3-Jul-08	Bricker Living Trust	687-005 Catalpa Way	077-377-16	835	29
54	10-Jul-08	Briggs Living Trust	687-465 Hazel Way	077-324-32	556	22
55	13-May-08	Brines Family Trust	687-990 Almond Way	077-151-15	70	19
56	27-Jun-08	Brochon Martial Henry & Delilia Ann JT.	Redwood Way	077-273-33	433	4
57	6-Nov-07	Brown, Robert G.	503-155 Mahogany Way	077-304-56	688	25
58	6-Jun-08	Bruce Family Trust	687-015 Ivy Way	077-353-28	708	25
59	28-Jul-08	Bullock, Arnold E/Bullock Viola J TR	687-995 Hemlock Way	077-242-24	366	4
60	4-Mar-08	Burleson, Vicki L	687-150 Hickory Way	077-353-23	717	28
61	5-Sep-08	Bush, James, K/Debra M JT	688-120 Hemlock Way	077-243-09	356	26
62	8-Apr-08	Bush,Angelina L	687-020 Cedar Way	077-377-08	843	23
63	15-Feb-08	Callison Living Trust	Cedar Way	077-283-15	482	**15**
64	24-Apr-08	Campbell, Stuart B & Paula S	530-225 The Strand	077-241-26	395	7
65	25-Jun-08	Carrell, Robert G & Melcena Family Trust Etal	687-305 Spalding RD.	077-303-37	695	6
66	25-Oct-07	Chappel, Sherry	687-875 Linden Way	077-232-31	285	**6**
67	1-May-08	Chatterley, Robert E & Bertha A. JT	687-320 Hazel Way	077-331-52	550	31
68	28-May-08	Clark, Donald L/Gina M JT	687-805 Sycamore Way	077-274-30	409	4
69	10-Apr-08	Clayton, Robert James	687-015 Redwood Way	077-378-22	819	21
70	8-Sep-08	Claytor, Ronald/Kathryn TC	688-000 Lakeview Dr.	077-264-19	416	23
71	25-Aug-08	Clough Family Tr.	682-920 Juniper Way	077-232-44	294	7
72	29-Jan-09	Clowers, Herbert F ETAL	Larch Way/The Strand	077-132-18	8	
73	26-Mar-08	Coleman, Stephanie M ETAL	687-795 Chinquepin Way	077-231-05	204	6
74	22-Sep-08	Colgan Family Trust	Sycamore Way	077-363-19	765	9
75	12-Dec-07	Cook Family Trust	688-085 Hickory Way	077-243-23	344	20
76	9-Dec-08	Cook, Richard W JR/Donna J CPS	Hickory Way	077-244-23	337	23
77	31-Dec-07	Corey, Clifford & Jeanne CPRS	687-440 Hemlock	077-313-18	643	1
78	11-Sep-08	Councilman Family Trust	Hollywood	077-252-25	382	20
79	16-Aug-08	Crowe, Paul L. & Arlene M. TR	687-890 Ivy way	077-231-32	316	16
80	26-Aug-08	Culjis, Lana S	686-975 Chestnut Way	077-375-19	869	6
81	24-Mar-08	Cunnington, Ronald & Lloy CP	688-085 Tulip way	077-184-19	143	8
82	11-Jun-08	Curley, Richard D/Judith A CP	686-785 Cypress	077-394-11	961	20
83	18-Jun-08	Curran, David M. & Carol L. JT	688-060 Hemlock Way	077-243-22	345	13
84	20-Apr-09	Curry, Richard A/Michelle J	503-400 Madrone Way	077-374-23	824	

1	DATE OF HOOKUP	Spalding Residents Connected to the District Disposal System APPLICANT NAME	SERVICE ADDRESS	APN#	ASS#	# Prorated Days
85	20-Apr-09	Curry, Richard A/Michelle J	Fir Way	077-383-37	903	
86	6-Dec-07	Dallimore,Rosaline & Richard P. WHCP	688-025 Mimosa Way	077-142-19	30	**26**
87	18-Apr-08	Davey Roland A & Rose Marie	689-110 Spalding Rd.	077-362-38	783	13
88	28-Feb-08	Deaver, Howard R/Brown Carol S JT	687-280 Magnolia Way	077-334-01	518	518
89	1-Jul-08	Degli-Esposti,Robert F. & Deanna J. Fam.Revoc.Li	687-800 Hickory Way	077-254-26	340	31
90	20-Apr-09	Dempsey, Tom	387-760 Walnut Way	077-172-23	116	
91	13-Dec-07	Denny Leland J & Santos,Linda Ann JT	687-710 hemlock Way	077-253-34	354	19
92	21-May-08	Dettloff, Susan E. & Michael D CP	687-010 Cedar Way	077-377-11	844	11
93	14-May-08	Devine, Robert William/Doreen Anne HWJT	Hollywood/Madrone	077-411-20	757	18
94	18-Apr-08	Diefenderfer Family Trust	Lilac Way	077-153-21	50	13
95	19-Jun-08	Dingess, Terry L/Ernestine S JT	687-0145 Hickory Way	077-352-30	726	12
96	14-Apr-08	DiPonti,Robert & Dolores M PMB 166 Sutie 7	687-580 Maple Way	077-332-56	522	17
97	9-Oct-08	Doll Revocable Inter Vivos TR	Spalding/Pinion	077-362-33	793	23
98	27-Aug-08	Donnell, Avis C Living Trust	687-560 Ivy Way	077-231-35	315	5
99	1-May-08	Doss, L.A./Linda JT	688-000 Hickory Way	077-244-32	338	31
100	19-Sep-08	Doty, Dennis W & Flynn-Doty, Diana HW	687-155 Hickory Way	077-353-24	718	12
101	2-Nov-07	Dowdy, Russell	Cedar Way	077-271-18	479	29
102	15-Sep-08	Dreiss Family Trust	687-105 Fir Way	077-387-10	898	16
103	2-Jun-08	Drew, James E/Henderson, Karen	688-090 Oak Way	077-132-20	12	29
104	3-Aug-08	Driggs Family Trust	Acorn Way	077-395-26	996	**29**
105	2-Jul-08	Duchi, Angelo A.& S. Ronda	Hazel Wayt/The Strand	077-224-27	240	30
106	13-Aug-08	Dunlap Angela K & Walsmith George JA	687-880 Hazel Way	077-215-11	230	19
107	19-Nov-07	Eagle Lake Community Church	687-905 Lakeview Dr.	077-273-41	423	12
108	12-Sep-08	Eldred Family Trust	686-925 Acacia Way	077-391-19	1015	19
109	1-Aug-08	Ellasces, Frank K Sr/Michell D Vaughn JT ETAL	Cedar Way	077-373-23	848	31
110	4-Jun-08	Elvin, Henry J/Mary M TR	Bamboo Way	077-394-17	971	27
111	16-Jul-08	Erlewine,Edward F.& Mary I 1992 Revco. Family	688-090 Redwood Way	077-263-14	429	16
112	16-Oct-08	Estes, Kenneth P/Mary L JT	Magnolia Way	077-216-10	215	16
113	24-Oct-07	Evans, Ronald R & Janet L. JT	687-750 Hickory Way	077-254-32	341	7
114	14-Mar-08	Fagundes, John P/Laurie M	503-555 Madrone	077-381-13	949	18
115	27-Nov-07	Fahringer, Pearline	687-945 Tulip Way	077-194-44	144	4
116	11-Sep-08	Farmer, Jerrel H. & Farmer, Maude M Rev.	686-125 Delwood Way	077-381-7	944	20
117	14-Oct-08	Farris Family Trust 1998 Rev. TR	Bamboo Way	077-397-28	967	18
118	27-Oct-08	Farris, Gloria C.	Cherry Way	077-282-09	504	5
119	1-Jul-08	Fauvelle, Mark D.	686-850 Cedar Way	077-373-19	847	31
120	18-Jul-08	Ferrier, William T/Laurette K JT	687-990 Ivy Way	077-221-18	314	14
121	19-Dec-07	Field, Shirley L Family Trust	Acorn Way	077-396-18	983	13
122	9-Apr-08	Field, Shirley L Family Trust	Acorn Way	077-396-17	984	22
123	5-Mar-08	Fies, William J JR. Trust Agreement	Hickory Way	077-244-30	335	27
124	24-Mar-08	Fischer, Charles B. & Janet A. Trust	Tulip	077-194-29	146	8
125	2-May-08	Flandreau, Claude-Anne 2005 TR	687-245 Sycamore Way	077-362-35	780	30
126	6-Jun-08	Flannagan, James S. TR	686-925 Madrone Way	077-351-23	748	25
127	14-Nov-07	Fortier, Gerald & Tracy JT	687-900 Tamarack Way	077-174-18	85	17
128	3-Oct-08	Fredenburg, Kenneth D	687-800 Hazel Way	077-211-15	232	29
129	26-Oct-07	Frey, Heinz Robert & Lieselotte JT	688-040 Lake View	077-264-07	414	5
130	26-Nov-07	Gallagher Family TR	687-980 Linden Way	077-223-01	275	5
131	25-Oct-07	Garcia Family Trust	686-995 Chestnut	077-375-10	868	6
132	11-Dec-07	Garland, John M.& Regina K. JT	687-820 Ivy Way	077-321-27	317	21
133	2-Nov-07	Glenden, Jack Terrence/Helen Lathe Family Trust	687-600 Cedar Way	077-301-19	481	29
134	24-Apr-08	Glenn, James H. Irrevocable Trust	687-960 Sycamore	077-241-22	398	7
135	7-May-08	Glenn, Leon H.	688-030 Sycamore Way	077-241-25	397	25
136	7-Apr-08	Godde, Lawrence A. & Godde, Gealdine D	Lakeview Dr.	077-273-39	427	24
137	12-Sep-08	Golden Gary/Erma E Trust	Almond Way	077-164-20	71	19
138	21-Apr-08	Gomez, Joe I & Olivia ETAL	687-315 Hazel Way	077-324-47	555	10
139	21-Apr-08	Goyette,Vern & Porrasi, Cecilia TC	077-232-23 Linden Way	077-232-23	288	10
140	14-May-08	Grajczyk, Gary R. & E. Louise	687-320 Hollywood Way	077-312-26	659	18
141	9-Jun-08	Gregorius, Benedict & Sheila Francine JT	687-985 Chinquepin	077-217-10	201	22
142	9-May-08	Grout, George/Zona JT	688-105 Hazel Way	077-224-11	242	23
143	28-May-08	Haddox, Caroline ETAL	Walnut/Willow	077-172-25	117	4
144	3-Jun-08	Hague Donald & Edith E HW/Hague, Montana May	686-810 Acorn Way	077-393-25	990	28
145	5-Sep-08	Hallas, Charles/Rosalie Living Trust	688-125 Hickory Way	077-243-24	343	26
146	18-Jul-08	Handy Thomas & Linda	686-730 Acorn Way	077-393-12	992	14
147	16-Jul-08	Harper Family Trust	Chestnut Way	077-371-10	874	16
148	21-Nov-07	Harrison, Richard K/Julie A	Linden Way	077-233-46	267	10
149	26-Aug-08	Harvey Family Trust	687-930 Hazel Way	077-215-12	237	6
150	29-Apr-08	Healy,Thomas &Delores Etal %Robert, OB	687-640 Linden Way	077-323-36	578	2
151	18-Jun-08	Helmer, Nason James/Gail Ann Rev TR	686-800 Chestnut Way	077-372-05	860	13
152	18-Mar-08	Hembree , Stephanie L	Maple Way	077-212-15	220	14
153	28-Aug-08	Henrickson, Joseph G III/Marilyn HWJT	687-025 Spalding Rd.	077-361-19	801	4
154	20-Aug-08	Henrickson, Joseph G III/Marilyn JT	503-475 Madrone Way	077-373-13	837	12
155	2-May-08	Henson John E & Evelyn A Trust	503-150 Pinion Way	077-304-52	687	30
156	25-Oct-07	Herfi, David Lee & Cynthia Louise JT	Lakeview Dr.	077-274-20	408	6
157	20-Apr-09	Heritage Land Co	Redwood Way	077-262-18	437	
158	22-Apr-08	Herrbach, Clarence E/Herrbach, Rae B	686-760 Sycamore Way	077-403.20	776	9
159	9-Apr-08	Hiehle, Dustin L & Georgia JT	687-005 Cedar Way	077-376-24	854	22
160	26-Sep-08	Hindersheid, Dave/Cecelia	687-755 Juniper Way	077-231-23	310	5
161	28-Jul-08	Holland, Paul Reginald/Flor Rev Liv Trust	Strand/Willow/Walnut	77-162-05,06,(	106	4
162	2-Apr-08	Hopwood, Kenneth/Jayne H ETAL All AS JT	686-950 Sycamore Way	077-363-15	768	**29**
163	7-Apr-08	Hosking Robert R/Margaret	687-040 Cedar Way	077-377-09	842	24
164	15-May-08	House, David J/Chrisandra M CPS	687-765 Orchard Way	077-214-17	189	17
165	1-Oct-08	House, James/Diana JT(Vista Reverse 8 LLC)	688-045 Redwood Way	077-262-14	438	31
166	21-Aug-08	Howes James W. & Elizabeth	687-670 Catalpa Way	077-272-01	448	11
167	3-Jun-08	Hunter, John L & Dorothy A JT	687-505 Hollywood Way	077-311-37	663	28

	DATE OF HOOKUP	Disposal System APPLICANT NAME	SERVICE ADDRESS	APN#	ASS#	Prorated Days
58	9-Apr-08	Illia Family Trust	687-300 Sycamore	077-311-23	677	22
69	25-Jun-08	Ito, Douglas Y ETAL	Hickory Way	077-353-27	720	6
70	14-Apr-08	Jackson Family Trust	686-920 Redwood Way	007-401-05	814	17
71	23-Sep-08	James Timothy & Louise JT.	687-350 Hazel Way	077-395-16	994	8
72	31-Mar-08	James, Daniel L. & Diane L. JT	687-065 Acorn Way	077-331-43	549	1
73	29-Sep-08	Jarvis Family Trust	686-760 Chestnut Way	077-372-19	865	2
74	9-Jun-08	Jessop, Merl & Sondra L. Etal	Chinquepin	077-214-23	186	22
75	9-Jun-08	Jessop, Merl & Sondra L. Etal	Chinquepin	077-214-26	187	22
76	9-Jun-08	Jessop, Merl K.& Sondra L. JT.	Chinquepin	077-214-15	197	22
77	2-Jun-08	Johnson, John E. & Darlene M.	687-815 Hazel Way	077-234-40	251	29
78	18-Jun-08	Jones, James E.	876-715 Hollywood	077-251-20	393	13
79	24-Apr-08	Jones, Jerry Lee/Marsha S Fam TR	687-995 Sycamore Way	077-264-18	405	7
80	6-Nov-07	Jordon Norbert & Ruth E JT	687-705 Spruce Way	077-193-19	164	25
81	25-Aug-08	Kaiser , Bruce & Voorheis , Thelma JT	Hollywood Way	077-242-18	376	7
82	25-Jul-08	Keehn, Thomas J	687-110 Tulip Way	077-184-20	142	11
83	19-Jun-08	Keller, Nelda Ray Revocable Living Trust	687-585 Hollywood Way	007-311-44	662	12
84	22-Apr-08	Kelley Family Trust C/O Ian Kelley Trustee	688-005 Ivy Way	077-244-31	324	9
85	6-Jun-08	Kelly , Paul D. & Deborah K. JT.	Laurel Way	007-234-39	257	25
86	2-Jun-08	Kerr Living Trust	686-800 Bamboo Way	077-394-16	970	29
87	26-Feb-08	Kimbal ,Dana S & Quilici, Janet K. JT	687-000 Acorn	077-396-08	985	4
88	2-Nov-07	Kimura, Roy Michio & Kimura, Anne Tr.	687-608 Ivy Way	077-231-31	312	29
89	23-Jun-08	King, Douglas G/Taura D	Willow Way	077-162-14	108	8
90	5-Sep-08	King, Douglas G/Taura D	Hollywood	077-251-42	388	26
91	15-Aug-08	King, Robert	686-835 Hollywood	077-403-18	772	17
92	18-Jun-08	Kneeland, Paul J	686-990 Hickory Way	077-353-11	709	13
93	17-Sep-08	Koch Living Trust	687-280 Hickory Way	077-353-20	701	14
94	2-Jun-08	Koehly, Joseph & Mercedes	687-240 Laurel Way	077-344-14	573	29
95	24-Apr-08	Kolbet, Richard N/Knapp Lucille	687-855 Catalpa Way	077-271-23	464	7
96	12-Sep-08	Kottke Family Trust	687-950 Catalpa	077-272-42	456	19
97	1-May-08	Krupp Family Revocable Trust	687-710 Sycamore	077-251-39	401	31
98	23-Oct-07	Kvidera, Michael C. & Marilyn Living Trust	686-985 Redwood Way	077-378-23	821	8
99	4-Apr-08	Larson Larry Lee/Hazel M CP	687-975 Sycamore Way	077-362-30	785	27
00	1-Nov-07	Lavarias , Jim B. & Vera A. CP	688-020 Juniper Way	077-222-17	292	30
01	9-Sep-08	Lawson Family 1997 Trust	Linden Way	077-323-40	582	22
02	29-Nov-07	Lay Gene W.& Merle A. CRPS	Acorn Way	077-393-17	988	2
03	3-Jun-08	Lay Gene W.& Merle A. JT	686-875 Acacia Way	077-391-17	1017	28
04	8-Aug-08	Lemon , Earl L. & Evelyn L. Trust	688-040 Hollywood Way	077-242-25	364	24
05	4-Aug-08	Lemon Grant L. & Kenny, Lenore M HW	687-960 Hemlock	077-243-18	348	28
06	4-Jul-08	Leonard, William R/Cynthia A JT	686-955 Spalding Rd.	077-361-24	803	28
07	23-Jun-08	Leonhardt, Larry/Priscilla CPRS	68-730 Chesnut Way	077-372-18	862	8
08	16-Apr-09	LeRoy, Doreene	687-630 Maple Way	077-332-45	528	
09	20-Apr-09	LeRoy, John David	686-925 Spalding Rd.	077-401-04	807	
10	28-May-08	Liggett, Raymond E	686-885 Bamboo Way	077-393-21	980	4
11	9-Apr-08	Long Lloyd E. & Inez M &David &Susan JT	Hollywood Way	077-241-19	384	22
12	28-May-08	Longe Gary, Alan & Virginia Jt	687-740 Catalpa Way	077-272-25	458	4
13	18-Sep-08	Luchetti 2002 Family Trust	686-825 Catalpa	077-373-11	839	13
14	9-Sep-08	Lunardi, Joseph I/Doris R Rev Int Sur TR	686-950 Fir Way	077-388-15	895	22
15	16-Jul-08	Machado Manual R. Rose M JT	688-050 Redwood Way	077-263-09	430	16
16	18-Jun-08	MacKay, William E/Terry E	Hemlock Way	077-252-26	369	13
17	11-Nov-08	Madden, Roy P/Dannette A JT	686-725 Elm Way	077-382-07	925	.20
18	6-Jun-08	Magioncalda Frank Etal	687-665 Hemlock	077-252-29	373	25
19	11-Dec-07	Marlatt Daniell & Mardel JT.	Hazel	077-234-13	250	21
20	6-Jul-08	MARQUIS, TRINA J/SHELTON, BRIAN K JT	687-905 Catalpa Way	077-271-22	463	26
21	29-Nov-07	Marzorini Ray E. Tanya L	687-805 Maple Way	077-215-09	231	2
22	12-Aug-08	Marzorini Ray E. Tanya L	687-788 Ivy Way	077-231-34	318	20
23	25-Jun-08	Marzorini, Ray E & Tanya CP	687-840 Spruce	077-194-28	154	6
24	7-Apr-08	McCabe William H. Danny TC	Syamore	077-362-11	786	24
25	27-Aug-08	McDaniel, Harvey & Gloria Family Trust	687-810 Juniper Way	077-232-27	296	5
26	9-Oct-08	McEacher, James A/Carol M	Bamboo Way	077-396-11	975	23
27	21-May-08	Mckenzie, Ralph & Laura B JT	Acacia Way	077-392-17	1010	11
28	11-Jul-08	Mellor, Brian S/Linda K JT	687-695 Orchard Way	077-214-27	191	21
29	12-Dec-07	Mendes Jonnie. Jr. & Birtie	687-660 Hemlock	077-253-20	355	20
30	6-Jun-08	Menzies Richard L & Charlene J.	686-835 Sycamore Way	077-402-17	789	25
31	17-Apr-08	Merkel Family Trust	687-615 Maple Way	077-331-49	535	14
32	8-Oct-08	Merrill Family Bypass Trust	Linden Way	077-233-31	278	24
33	5-Sep-08	Michel Robert H.	686-895 Acorn Way	077-392-16	1001	26
34	24-Apr-08	Middendorf, Thomas M/Mary E	687-829 Catalpa Way	077-271-24	465	7
35	19-Nov-08	Miller 2001 Revocable Trust	687-910 Tulip Way	077-171-32	126	12
36	19-Nov-08	Miller Family 2001 Rev Trust	687-890 Tulip Way	077-171-33	136	12
37	8-Nov-07	Miller, Arnold D. & Geraldine	687-500 Spalding Rd.	077-304-60	683	23
38	7-May-08	Miller, Michael H/Sue JT	687-070 Hollywood Way	077-363-23	764	25
39	8-Aug-08	Milliken, Ronald J/Zelma Mae Family Trust	688-110 Hollywood	077-242-10	374	24
40	23-Oct-07	Mingham Brain & Jane Family Trust	687-840 Tamarack	077-174-06	86	8
41	1-May-08	Mingham Family Trust	687-850 Willow Way	077-173-36	96	31
42	7-May-08	Mingham Family Trust	687-800 Willow Way	077-173-25	98	25
43	30-Jul-08	Monohan, Daniel D	687-100 Hemlock	077-352-22	734	2
44	28-Feb-08	Montgomery Chester G & Lawanda J Jt	688-040 Hemlock Way	077-243-25	346	2
45	7-May-08	Montgomery David Mary R JT	687-120 Hollywood Way	077-351-24	742	25
46	23-Oct-07	Monticelli John F. Jeannie Mar	687-105 Acacia Way	077-391-04	1012	8
47	28-Aug-08	Moore, Robert E. Flossie F.	687-800 Juniper Way	077-232-29	297	4
48	25-Oct-07	Morales, Lloyd	686-735 Acacia Way	077-391-13	1020	6

1	DATE OF HOOKUP	Spalding Residents Connected to the District Disposal System APPLICANT NAME	SERVICE ADDRESS	APN#	ASS#	# Prorated Days
249	9-Jun-08	Moreno, Ruben L	687-605 Magnolia way	077-332-48	521	22
250	13-May-08	Morgan Frances Pearl &Robert L Jt.	687-950 Spruce Way	077-194-43	153	19
251	23-Jul-08	Morris, Norman R. & Verna J CP.	687-915 Hazel	077-234-42	248	9
252	27-Jun-08	Morrow, John C/S Delphine	686-860 Catalpa	077-374-22	831	4
253	17-Mar-08	Muller France F. & Nellie JT	687-400 Sycamore	077-311-30	675	15
254	28-Jul-08	Narramore, Gregory W/Joanne A JT	686-975 Hollywood Way	077-363-27	767	4
255	9-May-08	Neil Gerald L. & Janet JT	687-675 Chinquepia	077-213-14	207	23
256	7-Oct-08	Neil, Gerald E/Janet E JT	Catalpa	077-261-11	461	25
257	9-Jul-08	Neil, Gerald E/Janet E JT	Catalpa Way	077-271-07	476	23
258	26-Nov-07	Nelson, Kenneth A/Rhonda L J.T.	687-835 Cedar Way	077-283-18	484	5
259	26-Nov-07	Newman, James Edgar/Newman, James Bruce	687-480 Spalding Rd.	077-304-61	684	5
260	30-Nov-07	Niles Family Trust %Niles, Ralph & Rita	Tamarack Way	077-164-16	83	1
261	12-Aug-08	Norris Family Trust % Norris Betty E. Trust	Hemlock	077-253-25	357	20
262	21-Apr-08	Novey, Joanne M/Lisa Marie JT	688-100 Oak Way	077-131-16	14	10
263	2-Jul-08	Noxon, Timothy E/Maribeth	687-835 Redwood Way	077-272-22	443	30
264	15-Oct-07	Odle, Curtis I/Denise C	687-550 Hollywood	077-312-33	653	17
265	24-Jun-08	Oliver Jerald A	Sycamore	077-403-15	777	7
266	21-Aug-08	Oliver, Phillip H & Ilean C. & James R. & Col.	Redwood Way	077-303-29	698	11
267	25-Aug-08	Olson Family Trust	687-905 Redwood Way	077-272-38	442	7
268	31-Oct-07	Osborn, Daniel D/Suzanne M	503-220 Mahogany Way	077-273-22	436	1
269	28-Jul-08	Panart, Augustine D Z/Panart Paula F TR	Juniper	077-321-12	617	4
270	2-Nov-07	Parker 1995 Family Trust	Delwood St.	077-381-11	943	29
271	28-Sep-08	Parker, Rex A/Denise A JT	686-830 Delwood Way	077-382-17	932	3
272	4-Sep-08	Parker, Rex a/Katherine Trust	686-830 Elm Way	077-383-38	906	27
273	11-Sep-08	Pastorino, Norman F./House, Monica J.T.	686-735 Lakeview	077-401-07	812	20
274	3-Sep-08	Patrick Fam TR	688-105 Linden Way	077-222-22	280	28
275	9-Oct-08	Patrick, Michael B	687-980 Mimosa	077-143-08	25	23
276	10-Jul-08	Pavese Family Trust	687-020 Delwood Way	077-386-21	926	22
277	27-Mar-08	Pearson, James C/Sandra L	Cherry/Mahogany	077-281-01	506	5
278	27-Mar-08	Pearson, James S/Sandra L Fmly TR	Chesstnut/Strand	077-283-13	492	5
279	28-May-08	Peay Family Trust	688-085 Ivy Way	077-244-33	322	4
280	8-Sep-08	Pennington, David/Suzanne JT	687-940 Willow Way	077-173-17	94	23
281	23-Nov-07	Pindar, Lynn/Pindar, Lynnette	Lilac Way	077-153-14	49	8
282	4-Jul-08	Popperwell, W Trust	Madrone/Catalpa	077-377-19	836	28
283	29-Apr-08	Portz Family Revocable Trust	687-675 Hazel Way	077-234-37	253	2
284	3-Mar-08	Potter Caroleen C	503-025 Madrone Way	077-413-14	712	29
285	6-Aug-08	Potter, R. Craig/Jessie A	687-890 Hollywood	077-252-22	378	26
286	20-Feb-08	Potter, Timothy J/Lorene L	Redwood Way	077-272-35	441	10
287	9-Apr-08	Purcell, A.W./Norma E	687-105 Acorn	077-395-17	993	22
288	29-Apr-08	Rabo, Ronald R/Shirley E J.T.	687-607 Maple Way	077-331-48	536	2
289	27-Sep-08	Rasnic, John L	687-285 Linden Way	077-322-10	600	4
290	11-Aug-08	Ray Family Trust	686-790 Hollywood Way	077-411-17	759	21
291	8-Sep-08	Rebideaux, Randy L/Laurene J JT	686-925 Cherry Way	077-384-11	889	23
292	10-Apr-08	Rodas, Joseph m/H. Leota J.T.	687-785 Juniper Way	077-231-24	309	21
293	5-Sep-08	Rohner, Alvin Thomas/Kay Louise Trust	686-950 Delwood Way	077-386-18	929	26
294	11-Jun-08	Rose, Ernest W/Nancy L J.T.	686-880 Bamboo Way	077-394-13	960	20
295	14-Apr-08	Rose, William N./Carol Leah	687-550 Lakeview Dr.	077-304-62	689	17
296	9-Jul-08	Rosselott Living Trust	687-805 Linden Way	077-232-37	287	23
297	16-Nov-07	Sain, David P	687-200 Hickory Way	077-353-26	702	15
298	18-Jul-08	Saulisberry TTEE Fam TR/Saulisberry 1992 Fam	687-770 Maple Way	077-212-20	219	14
299	24-Oct-07	Schmidt, Marlene	687-785 Hickory Way	077-253-30	352	7
300	12-Jul-08	Schofield, Robert E/Schofield, Ryan E JT	687-765 Chinquepin Way	077-213-16	206	20
301	12-Dec-07	Scott, Vicky I	680-470 Hollywood Way	077-312-31	656	20
302	6-Oct-08	Seifert, Kenneth J/Frances B CP	686-865 Redwood Way	077-374-25	825	26
303	22-Aug-08	Shaffer, Datha/Shaffer/Sandra J JT	687-900 Linden Way	077-233-39	276	10
304	22-Sep-08	Shanks, Calrence M/C Lillian Living Trust	687-850 Hollywood Way	077-252-33	379	9
305	8-Aug-08	Shult, Edward H/Margaret F	688-030 Willow Way	077-163-15	103	24
306	2-Jun-08	Sibley William Robert & Joan Frances JT	Madrone/Bamboo	077-397-27	968	29
307	1-Mar-08	Sickles, Myron A/Elaine C	687-295 Maple Way	077-331-26	542	31
308	9-Mar-09	Silva, Eugene D	687-530 Hollywood Way	077-312-14	654	
309	15-May-08	Simon, Paul R/Morene L TR	687-780 Tamarack Way	077-174-31	87	17
310	1-Apr-08	Simon, Robert M/Rita M	687-020Juniper Way	077-341-07	606	30
311	9-Sep-08	Smalley, Robert J Jr/Smalley Marla J. Trust	687-015 Elm Way	077-386-17	918	22
312	17-Apr-08	Smith Living Trust %Smith, Lowell & Joyce	687-595 Maple Way	077-331-47	537	14
313	6-Oct-08	Smith Stanley B & Martin, Sally	686-995 Elm Way	077-386-16	919	26
314	29-Jul-08	Smith, Brenda Jean/Janus, Mary Kathleen	687-095 Delwood Way	077-385-10	936	3
315	5-Aug-08	Smith, Daryl E/Margie J/Smith, Robert J JT	687-020 Cypress Way	077-385-16	947	27
316	9-Jun-08	Smith, Gregg S/Ordile, Tara Leisa TC	Bamboo Way	077-396-10	974	22
317	12-Sep-08	Smith, Robert J	688-995 Bamboo	077-396-12	976	19
318	28-Jul-08	Smith, Thomas Lee/Paula Kay Joint Living Trust	686-985 Cypress Way	077-397-17	957	4
319	2-Sep-08	Smith, Vicky L/Smith, Robert J JT	687-090 Cypress Way	077-385-11	945	29
320	13-Jun-08	Snearly, Bonnie J	687-980 Cedar Way	077-271-12	477	18
321	28-Apr-08	Snyder, James V/Lorretta C	686-955 Cherry Way	077-388-20	888	3
322	15-Feb-08	Snyder, Norman E/Fleckenstein Trudy	687-815 Chestnut Way	077-282-06-12	496	15
323	24-Jun-08	Soderlund, William T/Joann A JR	686-990 Cherry Way	077-375-06	877	7
324	5-Mar-08	Solis, Jesus H/Rose Marie	387-320 Hemlock Way	077-313-17	645	27
325	5-Nov-07	Solis, Raymond R/Kristy P CP	680-970 Cherry Way	077-375-12	878	27
326	19-Nov-07	Sorensen, Lynn Richard/Janice Rae HWJT	Hemlock Way	077-313-10	644	12
327	5-Sep-08	Sorenson, Keld/Jeanne Trust	501-955 The Strand	077-143-12	26	26
328	1-Mar-08	Spalding CSD	502-907 Mahogany Way	077-310-02 077-320-02	595	31
329	23-Oct-07	Spalding Marina	The Strand		1027	8

	DATE OF HOOKUP	Disposal System APPLICANT NAME	SERVICE ADDRESS	APN#	ASS#	Prorated Days
0	5-Sep-08	Spediacci, Clifford K/Shirley A JT	687-690 Juniper Way	077-232-45	298	26
1	25-Sep-08	Spencer, Reubennette 1987 TR	Linden Way	077-323-44	579	6
2	21-May-08	Stanley, Vernon F/Theda TR	687-885 Chinquepin Way	077-217-06	202	11
3	21-May-08	Stanley, Vernon F/Theda TR	Magnolia Way/Division Wa	077-217-03	210	11
4	21-May-08	Stanley, Vernon F/Theda TR	Magnolia Way	077-217-05	211	11
5	3-Dec-07	Steffens, John R/Barbara/Fogal, Russell E/Th	687-300 Laurel Way	077-324-34	571	29
6	29-Oct-08	Steinocher, Daniel G/Linda L JT	687-830 Cedar Way	077-271-14	478	3
7	19-Dec-07	Stelzriede, Michael/Cathryn C JT	Ridge Way	077-151-22	66	13
8	8-Nov-07	Stent, Bob/Sandra JR/Weddell, Jeanette R.	Spalding Rd.	077-303-33	693	23
9	28-May-08	Stephens Family Trust	Tamarack Way	077-163-16	90	4
0	15-Sep-08	Stout, Clarence&Audrey	Maple Way	077-282-08	499	16
1	12-Dec-07	Strickland, Robert & David JT	688-030 Tulip Way	077-161-14	133	20
2	18-Apr-08	Suchan, Alex/Lois	686-820 Fir Way	077-384-14	897	13
3	2-Jun-08	Sullivan Family Revoc Trust	687-990 Walnut Way	077-162-17	120	29
4	29-Apr-08	Sullivan, William A/Joanne M J.T.	387-290 Maple Way	077-332--49	532	2
5	20-Oct-08	Taylor, James R/Shirley L JT	Delwood	077-386-20	927	12
6	4-Sep-08	Tetrault Family 2000 Trust	Juniper/Linden	077-322-14	599	27
7	21-May-08	Thomas, Theodore J/Diana M CPRS	688-085 Larch Way	077-132-15	9	11
8	14-Jul-08	Thompson Family Trust ETAL	688-030 Tupelo Way	077-142-16	34	17
9	1-May-08	Todd, Clifford E Jr	Maple Way	077-331-51	533	31
50	2-Nov-07	Todd, Dennis/Andrea - ***Currently disconnected due to non-payment of O/M fees***	Cedar Way	077-271-15	469	29
51	22-Apr-08	Togni, Arnold/Dolly TR	698-105 Ivy Way	077-221-15	313	9
52	23-Jul-08	Togni, Arnold/Dolly TR	688-105 Ivy Way	077-244-29	321	9
53	11-Jun-08	Tomasini Family Trust	687-895 Hollywood Way	077-251-33	387	20
54	15-Mar-08	Torchin, Ali Chan B & Reinelde M	687-430 Hollywood Way	077-312-32	657	17
55	18-Jul-08	Traver, Jess S III/Frances D JT	Laurel Way	077-323-46	577	14
56	3-Apr-08	Turek, Raymond W/Lois M JT	687-040 Cherry Way	077-375-14	866	28
57	6-Mar-08	Turner, Lucy D	686-835 Cherry Way	077-384-17	892	26
58	2-Apr-08	Van Tassel Fam Trust	687-130 Spalding Rd.	077-362-37	782	29
59	15-May-08	Vaughn, Lee/Leni A HW/Calilan, James D JT	687-625 Spalding Rd.	077-303-30	691	17
60	23-Oct-07	Walton Family Trust	688-010 Tamarack Way	077-164-22	73	8
61	7-Nov-07	Ward, Carlos V/Grace G 1996 Revoc Living Trust A	687-635 Sycamore Way	077-304-54	678	24
62	1-Jul-08	Ward, Carlos V/Grace G Rev Liv TR	Madrone	077-378-27	822	31
63	3-Jul-08	Ward, Carlos V/Grace G Revocable Living Trust	686-955 Redwood Way	077-378-25	823	29
64	15-Apr-08	Ward, Kenneth V/Lorna JT	Sycamore	077-304-55	679	16
65	3-Dec-07	Watson, William J Jr./Sonjo M CP	687-055 Cedar Way	077-376-23	851	29
66	6-Dec-07	Watts, James C/Lorene J JT	503-155 Madrone Way	077-411-16	749	26
67	9-May-08	Watts, James C/Lorene T JT	688-125 Spruce Way	077-183-16	156	23
68	14-Nov-07	Weaver Family Trust	687-915 IvyWay	077-254-24	326	17
69	20-Oct-08	Wells Trust	689-905 Hemlock	077-252-34	367	12
70	19-Nov-07	White, C.W./Joyce M JT	687-760 Lakeview Dr.	077-274-28	418	12
71	15-Aug-08	White, Earl Richard Jr/Karron S JT	686-840 Sycamore	077-403-19	771	17
72	19-May-08	White, Frank R 1991 Trust	501-275 The Strand	077-133-07	6	13
73	2-Nov-07	Whitmer, Rudy/Louise	687-775 Cedar Way	077-283-23	486	29
74	28-May-08	Wilder, Arvenna	687-700 Ivy Way	077-231-03	320	4
75	14-Nov-07	Williams Family Trust	686-950 Spalding Rd.	077-362-14	795	17
76	28-Apr-08	Williams, Cal R/Catherine S	687-020 Fir Way	077-388-12	894	3
77	13-Dec-07	Williams, Robert V/Viola Mae	687-445 Hemlock Way	077-312-28	647	19
78	22-Sep-08	Williams, Robert/Blackwell, Viola(new owners)	Hemlock Way	077-313-08	642	9
79	20-Aug-08	Wilson, Jack Trust	687-625 Catalpa Way	077-302-19	459	12
80	20-Aug-08	Wilson, Rollans B	503-435 Mahogany Way	077-302-18	450	12
81	11-Jun-08	Winingar Family 1983 Trust	686-830 Elm Way	077-383-34	914	20
82	14-May-08	Wong, Fay/Bonnie E/Taber, Edward/Judy	Lakeview Dr.	077-273-35	428	18
83	22-Aug-08	Woodward, Robert/Maria 1989 Trust	687-700 Hickory Way	077-254-21	342	10
84	23-Jun-08	Yee, Gary R/Michael G	686-785 Hemlock Way	077-412-22	732	8
85	24-Jun-08	Yee, Michael Gregg	686-785 Hickory	077-412-21	731	7
86	6-Nov-07	Yolo, Duke/Terri JT ETAL C/O Cristine, Barry R.	Acorn Way	077-393-16	989	25
87	23-Jul-08	Young, Vera L	688-055 Lakeview Rd.	077-263-10	421	9
88	27-Oct-08	Younie, Leslie I Jr/Sheri M ETAL TC	687-045 Redwood Way	077-378-20	818	5
89	7-Aug-08	Yuill, Edward G/Deborah L HW	Tupelo	077-141-14	38	25
90	2-Dec-08	Zunino, Michael A/Sheree A Family Trust	Lilac Way	077-152-23	53	29
91						

ATTACHMENT D

Technical Report Form
No On-site Waste Disposal Certification

Property Owner Name (print)	
Assessor's Parcel Number	
Street Address	

Please list any improvements to the above-listed property, including but not limited to, any structures, wells, utilities, or septic tanks located on the property. Use additional paper if necessary.

Improvements:

For the purpose of verifying the absence of on-site waste disposal systems, the Discharger must provide written consent to allow Water Board staff to enter the Discharger's property. Please complete the following sections.

Permission to allow inspection.

I, _____(print property owner's name), do hereby provide consent to allow Water Board staff to enter my property for the purpose of verifying the absence of on-site waste disposal systems.

Would you like to be present during the inspection?

I, _____ (print property owner's name),

- ☐ Would like to be present during the inspection
- ☐ Would like someone other than myself to be present during the inspection
- ☐ Do not wish to be present during the inspection

If you would like to be present during the inspection, provide your contact information or the contact information of the person you wish to be present during the inspection.

Name of person to be present	
Phone number	
Mailing address	
Cell phone number (if available)	
E-Mail Address (if available)	

I hereby certify that the above information is true and correct. I understand that failure to provide complete and accurate information may result in the imposition of administrative or judicial civil liability.

_____ _____

Signature Date

ATTACHMENT E

Fact Sheet – Requirements for Submitting Technical Reports Under Section 13267 of the California Water Code

October 8, 2008

What does it mean when the regional water board requires a technical report?

Section 13267[1] of the California Water Code provides that "...the regional board may require that any person who has discharged, discharges, or who is suspected of having discharged...waste that could affect the quality of waters...shall furnish, under penalty of perjury, technical or monitoring program reports which the regional board requires".

This requirement for a technical report seems to mean that I am guilty of something, or at least responsible for cleaning something up. What if that is not so?

Providing the required information in a technical report is not an admission of guilt or responsibility. However, the information provided can be used by the regional water board to clarify whether a given party has responsibility.

Are there limits to what the regional water board can ask for?

Yes. The information required must relate to an actual or suspected discharge of waste, and the burden of compliance must bear a reasonable relationship to the need for the report and the benefits obtained. The regional water board is required to explain the reasons for its request.

What if I can provide the information, but not by the date specified?

A time extension can be given for good cause. Your request should be submitted in writing, giving reasons. A request for a time extension should be made as soon as it is apparent that additional time will be needed and preferably before the due date for the information.

Are there penalties if I don't comply?

Depending on the situation, the regional water board can impose a fine of up to $1,000 per day, and a court can impose fines of up to $25,000 per day as well as criminal penalties. A person who submits false information is guilty of a misdemeanor and may be fined as well.

What if I disagree with the 13267 requirement and the regional water board staff will not change the requirement and/or date to comply?

Any person aggrieved by this action of the Regional Water Board may petition the State Water Board to review the action in accordance with Water Code section 13320 and California Code of Regulations, title 23, sections 2050 and following. The State Water Board must *receive* the petition by 5:00 p.m., 30 days after the date of the Order, except that if the thirtieth day following the date of this Order falls on a Saturday, Sunday, or state holiday, the petition must be received by the State Water Board by 5:00 p.m. on the next business day. Copies of the law and regulations applicable to filing petitions may be found on the Internet at: http://www.waterboards.ca.gov/public_notices/petitions/water_quality or will be provided upon request.

Claim of Copyright or other Protection

Any and all reports and other documents submitted to the Regional Board pursuant to this request will need to be copied for some or all of the following reasons: 1) normal internal use of the document, including staff copies, record copies, copies for Board members and agenda packets, 2) any further proceedings of the Regional Board and the State Water Resources Control Board, 3) any court proceeding that may involve the document, and 4) any copies requested by members of the public pursuant to the Public Records Act or other legal proceeding.

If the discharger or its contractor claims any copyright or other protection, the submittal must include a notice, and the notice will accompany all documents copied for the reasons stated above. If copyright protection for a submitted document is claimed, failure to expressly grant permission for the copying stated above will render the document unusable for the Regional Board's purposes, and will result in the document being returned to the discharger as if the task had not been completed.

If I have more questions, who do I ask?

Requirements for technical reports normally indicate the name, telephone number, and email address of the regional water board staff person involved at the end of the letter.

[1] All code sections referenced herein can be found by going to www.leginfo.ca.gov . Copies of the regulations cited are available from the Regional Board upon request.