# California Regional Water Quality Control Board
## Santa Ana Region

3737 Main Street, Suite 500, Riverside, California 92501-3348
Phone (951) 782-4130 • FAX (951) 781-6288 • TDD (951) 782-3221
www.waterboards.ca.gov/santaana

**Linda S. Adams**
*Secretary for Environmental Protection*

**Arnold Schwarzenegger**
*Governor*


June 10, 2009

Patrick Sheilds, Executive Manager of Operations
Inland Empire Utilities Agency
6063 Kimball Avenue
Chino, Ca 91708

**ISSUANCE OF WASTE DISCHARGE AND PRODUCER/USER RECLAMATION REQUIREMENTS FOR THE INLAND EMPIRE UTILITIES AGENCY'S REGIONAL WATER RECYCLING FACILITIES, INCLUDING RP-1, RP-4, RP-5 AND CARBON CANYON, SAN BERNARDINO COUNTY - ORDER NO. R8-2009-0021, NPDES No. CA8000409**

Dear Mr. Sheilds:

Enclosed is a copy of tentative Order No. R8-2009-0021, NPDES No. CA8000409 for your review and comments. The tentative Order consolidates into one set of waste discharge and water recycling requirements, all the individual waste discharge requirements issued to Inland Empire Utilities Agency's Regional Water Reclamation facilities, including RP-1 and RP-4, RP-5, and Carbon Canyon Water Reclamation Facility. These facilities discharges tertiary treated and disinfected wastewater into either Prado Park Lake, Reach 1 of Cucamonga Creek, or Chino Creek which are all tributaries to Reach 3 of the Santa Ana River within the Prado Basin Management Zone.

This Order will be considered by the Regional Board on July 10, 2009. The Board meeting will start at 9:00 a.m. and will be held at the Orange County Sanitation District Conference Room, 10844 Ellis Avenue, Fountain Valley. Although all comments that are provided up to and during the public hearing on this matter will be considered, receipt of comments by June 19, 2009, would be appreciated so that they can be used in the formulation of the draft Order that will be transmitted to the Board two weeks prior to the hearing. The draft Order may contain changes resulting from comments received from you and others. To view and/or download a copy of the draft Order, please access our website at *http://www.waterboards.ca.gov/santaana/board_info/agendas/2009_agendas.shtml* on or after June 10, 2009.

Federal and State regulations require that the public be notified of the public hearing regarding these waste discharge and producer /user reclamation requirements at least 30 days in advance. Therefore, in order for the Board to consider your waste discharge requirements on July 10, 2009, such notice must be made by June 10, 2009. Copies of the "Notice of Public Hearing" are also enclosed. Two copies are to be posted by June 10, 2009, in conspicuous places, one in the vicinity of the facility and one in the locality to be affected by the discharge (e.g. local post office, library, city hall, or courthouse). A copy of the notice must be published in a local newspaper of general circulation for one day, no later than June 10, 2009. The expense of publication is to be paid by the Agency. By June 19, 2009, you must file with this office proof of posting and publication. Proof of posting shall consist of a statement executed on the enclosed form and the proof of publication shall consist of an affidavit from the publisher or the foreman of the newspaper, with a copy of the notice as published, attached.

If you have any questions, please contact Jun Martirez at (951) 782-3258 or Jane Qiu at (951) 320-2008.

Sincerely,

Joanne E. Schneider
Environmental Program Manager

Enclosure: Tentative Order No. R8-2009-0021 and Staff Report
Notice of Public Hearing and Statement of Posting Notice

Please complete and return this copy by June 19, 2009
TO: Jane Qiu
CRWQCB Region 8
3737 Main Street, Suite 500
Riverside, CA 92501-3348

## STATEMENT OF POSTING NOTICE

I, _____, hereby state
(name of person posting the notices)

**THAT** I am the discharger or acting on behalf of the discharger,

**THAT** I have posted a copy of the "Notice of Public Hearing" at each of the following locations:

**Location 1:** _____
(describe how and where)

_____

Date Posted:_____

**Location 2:**_____
(describe how and where)

_____

Date Posted:_____

**THAT** the notices were posted in conspicuous places in the locality to be affected by the discharge;

**THAT** the notices pertained to:

Order No. R8-2009-0021 of the California Regional Water Quality Control Board - Santa Ana Region

NPDES No. CA8000409

Discharger: Inland Empire Utilities Agency – Regional Water Recycling Facilities, Surface Water Discharges and Recycled Water Use

**I declare under penalty of perjury that the foregoing is true.**

_____
(Signature of person who posted the copies of the notice)

Date: _____

Place: _____

California Regional Water Quality Control Board
Santa Ana Region
3737 Main Street, Suite 500
Riverside, CA 92501-3348

NOTICE OF PUBLIC HEARING
For
WASTE DISCHARGE AND PRODUCER/USER RECLAMATION REQUIREMENTS
(National Pollutant Discharge Elimination System Permit)
Order No. R8-2009-0021, NPDES No. CA8000409
For
Inland Empire Utilities Agency
Regional Water Recycling Facilities
Surface Water Discharges and Recycled Water Use
San Bernardino County

On the basis of preliminary staff review and application of lawful standards and regulations, the California Regional Water Quality Control Board, Santa Ana Region, proposes to issue waste discharge and producer/user reclamation requirements for the discharge of tertiary treated and disinfected wastewater from the Inland Empire Utilities Agency's Regional Water Reclamation Facilities, including RP-1, RP-4, RP-5, and Carbon Canyon, to either Prado Park Lake, Reach 1 of Cucamonga Creek, or Chino Creek, tributaries to Reach 3 of the Santa Ana River in the Prado Basin Management Zone.

The Board is seeking comments concerning the proposed waste discharge requirements and the potential effects of the discharges on the water quality and beneficial uses of the affected receiving waters.

The Board will hold a public hearing to consider adoption of the proposed waste discharge requirements as follows:

| | |
|---|---|
| DATE: | July 10, 2009 |
| TIME: | 9:00 a.m. |
| PLACE: | Orange County Sanitation District's Conference Room<br>10844 Ellis Avenue<br>City of Fountain Valley |

The Board's proposed Order, related documents, and all comments and petitions received may be inspected and copied at the Regional Board office, 3737 Main Street, Suite 500, Riverside, CA 92501-3348 (phone 951-782-4130) by appointment scheduled between the hours of 9:00 a.m. and 3:00 p.m., Monday through Friday. Copies of the proposed Order will be mailed to interested persons upon request to Jane Qiu at (951) 320-2008. The proposed Order can also be downloaded from our website at http://www.waterboards.ca.gov/santaana/board_decisions/tentative_orders/index.shtml starting June 10, 2009.

Interested persons are invited to submit written comments on the proposed Order No. R8-2009-0021. Interested persons are also invited to attend and express their views on issues relating to the proposed Order. Oral statements will be heard, but should be brief to allow all interested persons time to be heard. For the accuracy of the record, all testimony (oral statements) should be submitted in writing.

Although all comments that are provided up to and during the public hearing on this matter will be considered, receipt of comments by June 19, 2009 would be appreciated so that they can be used in the formulation of the draft Order that will be transmitted to the Board two weeks prior to the hearing. To view or download a copy of the tentative Order that the Board will consider at its meeting, please access our website at *http://www.waterboards.ca.gov/santaana/board_info/agendas/2009_agendas.shtml* on or after June 29, 2009.

Any person who is physically challenged and requires reasonable accommodation to participate in this Regional Board Meeting should contact Felipa Carrillo at (951) 782-3285 no later than June 19, 2009. Please bring the foregoing to the attention of any persons known to you who would be interested in this matter.

# California Regional Water Quality Control Board
## Santa Ana Region

3737 Main Street, Suite 500, Riverside, California 92501-3348
Phone (951) 782-4130 • FAX (951) 781-6288 • TDD (951) 782-3221
www.waterboards.ca.gov/santaana

**Linda S. Adams**
*Secretary for Environmental Protection*

**Arnold Schwarzenegger**
*Governor*


June 10, 2009

U.S. Environmental Protection Agency, Permits Issuance Section (WTR-5) – Doug Eberhardt
U.S. Army District, Los Angeles, Corps of Engineers - Regulatory Branch
U.S. Fish and Wildlife Service, Carlsbad – Christine Medak
State Water Resources Control Board, Office of the Chief Counsel – David Rice
State Department of Fish and Game, Los Alamitos - Ms. Latonio
California Department of Public Health, San Bernardino – Sean McCarthy
California Department of Public Health, Carpinteria - Jeff Stone
State Department of Water Resources, Glendale – Charles Keene
Santa Ana Watershed Project Authority – Celeste Cantu
Santa Ana River Dischargers Association – Ed Filadelfia
Orange County Water District - Nira Yamachika
San Bernardino County Transportation/Flood Control District – Naresh Varma
San Bernardino County Environmental Health Services – Daniel Avera
City of Chino, Public Works Department – Jose Alire
City of Chino Hills - Public Works Department
City of Fontana - Public Works Department, Chuck Hays, chays@fontana.org
City of Montclair - Nicole Greene
City of Ontario – Mohamed El-Amamy
City of Upland – Maria Linzay
Cucamonga Valley Water District
Inland Empire Waterkeeper – Autumn DeWoody, Autumn@iewaterkeeper.org
Orange County Coastkeeper - Garry Brown
Lawyers for Clean Water C/c San Francisco Baykeeper
Natural Resources Defense Council – David Beckman

**ISSUANCE OF WASTE DISCHARGE AND PRODUCER/USER RECLAMATION REQUIREMENTS FOR THE INLAND EMPIRE UTILITIES AGENCY'S REGIONAL WATER RECYCLING FACILITIES, INCLUDING RP-1, RP-4, RP-5 AND CARBON CANYON, SAN BERNARDINO COUNTY - ORDER NO. R8-2009-0021, NPDES NO. CA8000409**

Ladies and Gentlemen:

Enclosed is a copy of tentative Order No. R8-2009-0021, NPDES No. CA8000409 for your review and comments. The tentative Order consolidates into one set of waste discharge and water recycling requirements, all the individual waste discharge requirements issued to Inland Empire Utilities Agency's Regional Water Reclamation facilities, including RP-1 and RP-4, RP-5, and Carbon Canyon Water Reclamation Facility. These facilities discharges tertiary treated and disinfected wastewater into either Prado Park Lake, Reach 1 of Cucamonga Creek, or Chino Creek which are all tributaries to Reach 3 of the Santa Ana River within the Prado Basin Management Zone.

This Order will be considered by the Regional Board on July 10, 2009. The Board meeting will start at 9:00 a.m. and will be held at the Orange County Sanitation District Conference Room, 10844 Ellis Avenue, Fountain Valley. Although all comments that are provided up to and during the public hearing on this matter will be considered, receipt of comments by June 19, 2009, would be appreciated so that they can be used in the formulation of the draft Order that will be transmitted to the Board two weeks prior to the hearing. The draft Order may contain changes resulting from comments received from you and others. To view and/or download a copy of the draft Order, please access our website at *http://www.waterboards.ca.gov/santaana/board_info/agendas/2009_agendas.shtml* on or after June 10, 2009.

If you have any questions, please contact Jun Martirez at (951) 782-3258 or Jane Qiu at (951) 320-2008.

Sincerely,

Joanne E. Schneider
Environmental Program Manager

Enclosure: Tentative Order No. R8-2009-0021 and Staff Report

California Regional Water Quality Control Board
Santa Ana Region

July 10, 2009

**ITEM:**

**SUBJECT:** Issuance of Waste Discharge and Producer/User Reclamation Requirements for the Inland Empire Utilities Agency's Regional Water Recycling Facilities, Surface Water Discharges and Recycled Water Use, Order No. R8-2009-0021, NPDES No. CA8000409, San Bernardino County

**DISCUSSION:**

See attached Fact Sheet

**RECOMMENDATIONS:**

Adopt Order No. R8-2009-0021, NPDES No. CA8000409 as presented.

**COMMENT SOLICITATION:**

Comments were solicited from the discharger and the following agencies:

U.S. Environmental Protection Agency, Permits Issuance Section (WTR-5) – Doug Eberhardt
U.S. Army District, Los Angeles, Corps of Engineers - Regulatory Branch
U.S. Fish and Wildlife Service, Carlsbad – Christine Medak
State Water Resources Control Board, Office of the Chief Counsel – David Rice
State Department of Fish and Game, Los Alamitos - Ms. Latonio
California Department of Public Health, San Bernardino – Sean McCarthy
California Department of Public Health, Carpenteria - Jeff Stone
State Department of Water Resources, Glendale – Charles Keene
Santa Ana Watershed Project Authority – Celeste Cantu
Santa Ana River Dischargers Association – Ed Filadelfia
Orange County Water District - Nira Yamachika
San Bernardino County Transportation/Flood Control District – Naresh Varma
San Bernardino County Environmental Health Services – Daniel Avera
City of Chino, Public Works Department – Jose Alire
City of Chino Hills - Public Works Department
City of Fontana – Chuck Hays, chays@fontana.org
City of Montclair - Nicole Greene
City of Ontario – Mohamed El-Amamy
City of Upland – Maria Linzay
Cucamonga Valley Water District -
Inland Empire Waterkeeper – Autumn DeWoody
Orange County Coastkeeper - Garry Brown
Lawyers for Clean Water C/c San Francisco Baykeeper
Natural Resources Defense Council – David Beckman
Inland Empire Utilities Agency - Patrick Sheilds

**CALIFORNIA REGIONAL WATER QUALITY CONTROL BOARD**

**SANTA ANA REGION**

3737 Main Street, Suite 500, Riverside, California 92501-3348
Phone (951) 782-4130 - FAX (951) 781-6288– TDD (951) 782-3221

http://www.waterboards.ca.gov/santaana

# ORDER NO. R8-2009- 0021
# NPDES NO. CA8000409

# WASTE DISCHARGE AND PRODUCER/USER RECLAMATION REQUIREMENTS FOR INLAND EMPIRE UTILITIES AGENCY REGIONAL WATER RECYCLING FACILITIES SURFACE WATER DISCHARGES AND RECYCLED WATER USE

The following Discharger is subject to waste discharge requirements as set forth in this Order:

**Table 1. Discharger Information**

| | | | | |
|---|---|---|---|---|
| **Discharger/ Operator** | Inland Empire Utilities Agency | | | |
| **Name of Facility** | Regional Water Recycling Plant No. 1 (RP-1) | Regional Water Recycling Plant No. 4 (RP-4) | Regional Water Recycling Plant No. 5 (RP-5) | Carbon Canyon Water Reclamation Facility (CCWRF) |
| **Facility Address** | 2450 East Philadelphia Street | 12811 Sixth Street | 6068 Kimball Ave, Building "C". | 14950 Telephone Avenue |
| | Ontario, CA 91761 | Rancho Cucamonga, CA 91729 | Chino, CA 91708 | Chino, CA 91710 |
| | San Bernardino County | | | |
| The U.S. Environmental Protection Agency (USEPA) and the Regional Water Quality Control Board have classified this discharge as a major discharge. | | | | |

The discharge by Inland Empire Utilities Agency (IEUA) from the discharge points identified below is subject to waste discharge requirements as set forth in this Order:

TENTATIVE

**Table 2. Discharge Locations**

| Discharge Point | Effluent Description | Discharge Point Latitude | Discharge Point Longitude | Receiving Water |
|---|---|---|---|---|
| 001 | Tertiary treated effluent from RP-1 | N33$^{0}$56'39" | W117$^{0}$38'34" | Prado Park Lake, overflow from the lake to an unnamed creek, then to Reach 1A of Chino Creek, a tributary to Reach 3 of Santa Ana River in Prado Basin |
| | | | | Deliver recycled water for irrigation and groundwater recharge |
| 002 | Tertiary treated effluent from RP-1&RP-4 | N34$^{0}$01'31" | W117$^{0}$33'56" | Reach 1 of Cucamonga Creek, then to Mill Creek, then to Reach 1A of Chino Creek, a tributary to Reach 3 of Santa Ana River in Prado Basin |
| 003 | Tertiary treated effluent from RP-5 | N33$^{0}$57'44" | W117$^{0}$40'41" | Reach 1B of Chino Creek, a tributary to Reach 3 of Santa Ana River |
| 004 | Tertiary treated effluent from CCWRF | N33$^{0}$58'56 | W117$^{0}$41'48" | Reach 2 of Chino Creek, a tributary to Reach 3 of Santa Ana River |
| 005 | Recycled water from RP-1 | N34°01'29" | W117°35'57" | Use area overlying Chino North "Max Benefit" GMZ (or Chino 1, 2, and 3 "Antidegradation" GMZs – see Fact Sheet) |
| 006 | Recycled water from RP-4 | N34°04'59" | W117°31'35" | |
| 007 | Recycled water from RP-5 | N33°57'51" | W117°40'24" | |
| 008 | Recycled water from CCWRF | N33°58'47" | W117°41'37" | |
| S-001 | Stormwater from RP-1 | N34°01'36" | W117°35'59" | Stormwater runoff to Reach 1 of Cucamonga Creek |
| S-002 | Stormwater from RP-1 | N34°01'28" | W117°35'58" | Stormwater runoff to Reach 1 of Cucamonga Creek |

**Table 3. Administrative Information**

| | |
|---|---|
| This Order was adopted by the Regional Water Quality Control Board on: | July 10, 2009 |
| This Order shall become effective on: | July 10, 2009 |
| This Order shall expire on: | July 1, 2014 |
| The Discharger shall file a Report of Waste Discharge in accordance with title 23, California Code of Regulations, as application for issuance of new waste discharge requirements no later than: | January 2, 2014 |

I, Gerard J. Thibeault, Executive Officer, do hereby certify that this Order with all attachments is a full, true, and correct copy of an Order adopted by the California Regional Water Quality Control Board, Santa Ana Region, on July 10, 2009.

_____

**Gerard J. Thibeault, Executive Officer**

## Table of Contents

I. Facility Information ..... 5
II. Findings ..... 6
III. Discharge Prohibitions ..... 13
IV. Effluent Limitations and Discharge Specifications ..... 14
A. Effluent Limitations –Discharge Points (DP) 001, 002, 003, and 004 ..... 14
1. Final Effluent Limitations for discharges under conditions without 20:1 dilution in the receiving water – DPs 001, 002, 003 and 004 ..... 14
2. Interim Effluent Limitations – Not Applicable ..... 17
3. Toxicity Requirements/Discharge Specifications ..... 18
4. Effluent Limitations at DPs 002, 003, and 004, Under Conditions with 20:1 or More Dilution ..... 18
B. Land Discharge Specifications – Not Applicable ..... 19
C. Reclamation Specifications – DP 005 through DP 008 ..... 19
D. Stormwater Discharge Specifications – S-001 and S-002 ..... 23
V. Receiving Water Limitations ..... 24
A. Surface Water Limitations ..... 24
B. Groundwater Limitations ..... 25
VI. Provisions ..... 25
A. Standard Provisions ..... 25
B. Monitoring and Reporting Program (MRP) Requirements ..... 27
C. Special Provisions ..... 27
1. Reopener Provisions ..... 27
2. Special Studies, Technical Reports and Additional Monitoring Requirements ..... 28
3. Best Management Practices and Pollution Prevention ..... 30
4. Construction, Operation and Maintenance Specifications ..... 30
5. Special Provisions for Municipal Facilities (POTWs Only) ..... 31
6. Other Special Provisions ..... 35
7. Compliance Schedules – Not Applicable ..... 35
VII. Compliance Determination ..... 35

## List of Tables

Table 1. Discharger Information ..... 1
Table 2. Discharge Locations ..... 2
Table 3. Administrative Information ..... 2
Table 4. Facility Information ..... 5
Table 5. Basin Plan Beneficial Uses ..... 9
Table 6. Effluent Limitations at DP 001 through DP 004 ..... 14
Table 7. Effluent Limitations Applicable at DP 001 and DP 002 only ..... 15
Table 8. Effluent Limitations Applicable at DP 003 only ..... 15
Table 9. Effluent Limitations Applicable at DP 004 only ..... 15
Table 10. Effluent Limitations Under 20:1 Dilution ..... 18
Table 11. Recycled Water Effluent Limitations ..... 19
Table 12. Recycled Water Effluent TDS Limitations ..... 20

## List of Attachments

Attachment A – Definitions ..... A-1
Attachment B – Map ..... B-1
Attachment C – Flow Schematic ..... C-1
Attachment D – Standard Provisions ..... D-1
Attachment E – Monitoring and Reporting Program ..... E-1
Attachment F – Fact Sheet ..... F-1
Attachment G – EPA PPL Table ..... G-1
Attachment H – ML Table ..... H-1
Attachment I – Triggers for Monitoring Priority Pollutants ..... I-1
Attachment J – Stormwater Pollution Prevention Plan ..... J-1
Attachment K – Stormwater Monitoring and Reporting Requirements ..... K-1
Attachment L – Chino Basin Maximum Benefit Commitments ..... L-1

# I. FACILITY INFORMATION

The following Discharger is subject to waste discharge requirements as set forth in this Order:

**Table 4. Facility Information**

| | | | | |
|---|---|---|---|---|
| **Discharger/Operator** | Inland Empire Utilities Agency | | | |
| **Name of Facility (RWRF)** | RP-1 | RP-4 | RP-5 | CCWRF |
| **Address** | 2450 East Philadelphia Street | 12811 Sixth Street | 6068 Kimball Avenue Building "C" | 14950 Telephone Avenue |
| | Ontario, CA 91761 | Rancho Cucamonga, CA 91729 | Chino, CA 91708 | Chino, CA 91710 |
| | San Bernardino County | | | |
| **Facility Contact, Title and Phone** | Patrick O. Sheilds, Executive Manager of Operations, (909) 993-1806 | | | |
| **Authorized Person to Sign and Submit Reports** | Patrick O. Sheilds, Executive Manager of Operations, (909) 993-1806 | | | |
| **Address** | 6075 Kimball Avenue, Chino, CA 91708 | | | |
| **Mailing/Billing Address** | P.O. Box 9020, Chino Hills, CA 91709 | | | |
| **Type of Facility** | POTW | | | |
| **Facilities Permitted Flow** | 84.4 million gallons per day (mgd) | | | |
| **Facility Design Flow** | 44 mgd | 14 mgd | 15 mgd (w/ 1.3 mgd RP-2 sludge treatment system wastewater flows) | 11.4 mgd |

## II. FINDINGS

The California Regional Water Quality Control Board, Santa Ana Region (hereinafter Regional Water Board), finds:

**A. Background.** The Inland Empire Utilities Agency (hereinafter Discharger, or IEUA) owns and operates a regional wastewater collection system and four regional water recycling facilities (hereinafter, Facilities), including Regional Water Recycling Plants Nos. 1, 4, and 5 and the Carbon Canyon Water Reclamation Facility (CCWRF). The Discharger is currently discharging from these Facilities pursuant to the following waste discharge and producer/user water reclamation requirements:

1. Order No. R8-2006-0010, National Pollutant Discharge Elimination System (NPDES) Permit No. CA0105279, as amended by Orders No. R8-2007-0045 and No. R8-2007-0078, for treated wastewater discharges from Regional Water Recycling Plant No. 1 (RP-1) and Regional Water Recycling Plant No. 4 (RP-4);

2. Order No. R8-2008-0028, NPDES No. CA8000402 for treated wastewater discharges from Regional Water Recycling Plant No. 5 (RP-5); and

3. Order No. R8-2004-0020, NPDES No. CA8000073, as amended by Orders No. R8-2006-0038 and No. R8-2007-0078, for treated wastewater discharges from Carbon Canyon Water Reclamation Facility (CCWRF).

The Discharger submitted a Report of Waste Discharge (ROWD), dated January 27, 2009, and applied for a NPDES permit to consolidate the three waste discharge and producer/user water reclamation requirements identified above into one permit to regulate a total discharge of up to 84.4 million gallons per day (mgd) of tertiary treated wastewater from RP-1, RP-4, RP-5, and CCWRF.

For the purposes of this Order, references to the “discharger” or “permittee” in applicable federal and state laws, regulations, plans, or policy are held to be equivalent to references to the Discharger herein.

**B. Facility Description.** IEUA owns and operates a regional wastewater collection system and four water recycling plants. Wastewater can be diverted to different plants via available routing options built into the regional system (see Figure 1 of Attachment C for further detail). After treatment, effluent/recycled water can be discharged to nearby outfall(s) or it can be recycled for industrial uses, irrigation and groundwater recharge. The wastewater treatment systems consist of primary, secondary, and tertiary treatment. Treated wastewater is discharged from various discharge points either to Prado Park Lake, Reach 1 of Cucamonga Creek, or Chino Creek. The lake and the creeks are tributaries to Reach 3 of the Santa Ana River within the Prado Basin Management Zone. Recycled water is used in areas overlying the Chino North “Maximum Benefit” Groundwater Management Zone (GMZ) (or Chino 1, 2, and 3 “Antidegradation” GMZs). Groundwater recharge of recycled water is regulated under separate waste discharge requirements. Attachment B provides maps of the area

around these Facilities. Attachment C provides flow schematics at each Facility, the IEUA System-Wide influent flow interrelationship diagram, and a schematic of the IEUA System-Wide Water Recycling Distribution System.

**C. Legal Authorities.** This Order is issued pursuant to section 402 of the federal Clean Water Act (CWA) and implementing regulations adopted by the U.S. Environmental Protection Agency (USEPA) and chapter 5.5, division 7 of the California Water Code (commencing with section 13370). It shall serve as an NPDES permit for point source discharges from this Facility to surface waters. This Order also serves as Waste Discharge Requirements (WDRs) pursuant to article 4, chapter 4, Division 7 of the Water Code (commencing with section 13260).

**D. Background and Rationale for Requirements**. The Regional Water Board developed the requirements in this Order based on information submitted as part of the application, through monitoring and reporting programs, and other available information. The Fact Sheet (Attachment F), which contains background information and rationale for Order requirements, is hereby incorporated into this Order and constitutes part of the Findings for this Order. Attachments A through E and G through K are also incorporated into this Order.

**E. California Environmental Quality Act (CEQA).** Under Water Code section 13389, this action to adopt an NPDES permit is exempt from the provisions of CEQA, Public Resources Code section 21000 et seq. (*County of Los Angeles v. California State Water Resources Control Board* (2006) 143 Cal.App.4th 985, mod. (Nov. 6, 2006, B184034) 50 Cal.Rptr.3d 619, 632-636). This action also involves the re-issuance of waste discharge requirements for an existing facility that discharges treated wastewater to land and as such, is exempt from the provisions of California Environmental Quality Act (commencing with Section 21100) in that the activity is exempt pursuant to Title 14 of the California Code of Regulations Section 15301.

**F. Technology-based Effluent Limitations**. Section 301(b) of the CWA and implementing USEPA permit regulations at section 122.44, title 40 of the Code of Federal Regulations[1], require that permits include conditions meeting applicable technology-based requirements at a minimum, and any more stringent effluent limitations necessary to meet applicable water quality standards. The discharge authorized by this Order must meet minimum federal technology-based requirements based on Secondary Treatment Standards at Part 133 and/or Best Professional Judgment (BPJ) in accordance with Part 125, section 125.3. A detailed discussion of the technology-based effluent limitations development is included in the Fact Sheet (Attachment F).

---

[1] *All further statutory references are to title 40 of the Code of Federal Regulations unless otherwise indicated.*

**G. Water Quality-Based Effluent Limitations.** Section 301(b) of the CWA and section 122.44(d) require that permits include limitations more stringent than applicable federal technology-based requirements where necessary to achieve applicable water quality standards. This Order contains requirements, expressed as a technology equivalence requirement, more stringent than secondary treatment requirements. These requirements are necessary to meet applicable water quality standards.

The rationale for these requirements, which consist of tertiary or equivalent treatment requirements and other provisions, is discussed in the Fact Sheet.

Section 122.44(d)(1)(i) mandates that permits include effluent limitations for all pollutants that are or may be discharged at levels that have the reasonable potential to cause or contribute to an exceedance of a water quality standard, including numeric and narrative objectives within a standard. Where reasonable potential has been established for a pollutant, but there is no numeric criterion or objective for the pollutant, water quality-based effluent limitations (WQBELs) must be established using: (1) USEPA criteria guidance under CWA section 304(a), supplemented where necessary by other relevant information; (2) an indicator parameter for the pollutant of concern; or (3) a calculated numeric water quality criterion, such as a proposed state criterion or policy interpreting the state's narrative criterion, supplemented with other relevant information, as provided in section 122.44(d)(1)(vi).

**H. Water Quality Control Plans.** The Regional Water Board adopted a revised Water Quality Control Plan for the Santa Ana Region (hereinafter Basin Plan) that became effective on January 24, 1995. The Basin Plan designates beneficial uses, establishes water quality objectives, and contains implementation programs and policies to achieve those objectives for all waters in the Santa Ana Region addressed through the plan. More recently, the Basin Plan was amended significantly to incorporate revised boundaries for groundwater subbasins, now termed "management zones", new nitrate-nitrogen and TDS objectives for the new management zones, and new nitrogen and TDS management strategies applicable to both surface and ground waters.

This Basin Plan Amendment was adopted by the Regional Water Board on January 22, 2004. The State Water Resources Control Board (State Water Board) and Office of Administrative Law (OAL) approved the Amendment on September 30, 2004 and December 23, 2004, respectively. EPA approved the surface water standards components of the N/TDS Amendment on June 20, 2007.

In addition, the Basin Plan implements State Water Resources Control Board (State Water Board) Resolution No. 88-63, which established State policy that all waters, with certain exceptions, should be considered suitable or potentially suitable for municipal or domestic supply. Based on the criteria specified in the State Water Board Resolution, the Basin Plan specifies that Reaches 1A, 1B, and 2 of Chino Creek, Reach 1 of Cucamonga Creek and Reach 5 of the Santa Ana River, beginning at the intersection of Orange Avenue in the City of Redlands, and downstream reaches are excepted from the municipal and domestic supply beneficial use.

As discussed in detail in the Fact Sheet (Attachment F), beneficial uses applicable to the Prado Basin Management Zone, Reach 1 of Cucamonga Creek, Reaches 1A, 1B, and 2 of Chino Creek, and Reach 3 of the Santa Ana River are as follows:

**Table 5. Basin Plan Beneficial Uses**

| Discharge Point | Receiving Water | Beneficial Uses |
|---|---|---|
| 001 | Prado Park Lake overflow from the lake to an unnamed creek, then to Reach 1A of Chino Creek | Present or Potential:<br>Water contact recreation (REC-1), non-contact water recreation (REC-2), warm freshwater habitat, wildlife habitat (WILD), and rare, threatened and endangered species.<br>Recreational use at Prado Park Lake is restricted to fishing and boating.<br>Excepted from Municipal and Domestic Supply. |
| 002 | Reach 1 of Cucamonga Creek, then to Mill Creek, thence to Reach 1A of Chino Creek | Present or Potential:<br>Groundwater Recharge, Water contact recreation (REC-1), non-contact water recreation (REC-2), Limited warm freshwater habitat, and wildlife habitat (WILD).<br>Excepted from Municipal and Domestic Supply. |
| 003 | Reach 1B of Chino Creek | Present or Potential:<br>Water contact recreation (REC-1), non-contact water recreation (REC-2), warm freshwater habitat, wildlife habitat (WILD), and rare, threatened and endangered species.<br>Excepted from Municipal and Domestic Supply. |
| 004 | Reach 2 of Chino Creek | Present or Potential:<br>Groundwater Recharge, Water contact recreation (REC-1), non-contact water recreation (REC-2), Cold freshwater habitat, and wildlife habitat (WILD).<br>Excepted from Municipal and Domestic Supply. |
| 001, 002, 003, 004, S-001, & S-002 | Reach 3 of Santa Ana River within Prado Basin Area | Present or Potential:<br>Agricultural supply, groundwater recharge, water contact recreation, non-contact water recreation, warm freshwater habitat, wildlife habitat, and rare, threatened or endangered species.<br>Excepted from Municipal and Domestic Supply. |
| 001, 002, 003, 004, 005, 006, 007, 008, S-001, & S-002 | Chino North “Max Benefit” GMZ/Chino 1, 2 and 3 “antidegradation” GMZs | Present or Potential:<br>Municipal and domestic supply, agricultural supply, industrial service supply, and industrial process supply. |
| | Orange GMZ (affected GMZ downstream of discharge points) | Present or Potential:<br>Municipal and domestic supply, agricultural supply, industrial service supply, and industrial process supply. |

Requirements of this Order implement the Basin Plan.

I. **National Toxics Rule (NTR) and California Toxics Rule (CTR).** USEPA adopted the NTR on December 22, 1992, and later amended it on May 4, 1995 and November 9, 1999. About forty criteria in the NTR applied in California. On May 18, 2000, USEPA adopted the CTR. The CTR promulgated new toxics criteria for California and, in addition, incorporated the previously adopted NTR criteria that were applicable in the state. The CTR was amended on February 13, 2001. These rules contain water quality criteria for priority pollutants.

J. **Compliance Schedules and Interim Requirements – Not Applicable**

K. **State Implementation Policy.** On March 2, 2000, the State Water Board adopted the *Policy for Implementation of Toxics Standards for Inland Surface Waters, Enclosed Bays, and Estuaries of California* (State Implementation Policy or SIP). The SIP became effective on April 28, 2000 with respect to the priority pollutant criteria promulgated for California by the USEPA through the NTR and to the priority pollutant objectives established by the Regional Water Board in the Basin Plan. The SIP became effective on May 18, 2000 with respect to the priority pollutant criteria promulgated by the USEPA through the CTR. The State Water Board adopted amendments to the SIP on February 24, 2005 that became effective on July 13, 2005. The SIP establishes implementation provisions for priority pollutant criteria and objectives and provisions for chronic toxicity control. Requirements of this Order implement the SIP.

L. **Alaska Rule.** On March 30, 2000, USEPA revised its regulation that specifies when new and revised state and tribal water quality standards (WQS) become effective for CWA purposes. (40 C.F.R. section 131.21; 65 Fed. Reg. 24641 (April 27, 2000).) Under the revised regulation (also known as the Alaska rule), new and revised standards submitted to USEPA after May 30, 2000, must be approved by USEPA before being used for CWA purposes. The final rule also provides that standards already in effect and submitted to USEPA by May 30, 2000 may be used for CWA purposes, whether or not approved by USEPA.

M. **Stringency of Requirements for Individual Pollutants.** This Order contains both technology-based and water quality based effluent limitations for individual pollutants. The technology-based effluent limitations consist of restrictions on $BOD_5$ and Suspended Solids. Restrictions on the same pollutants are discussed in Section IV.B.2. of Attachment F. This Order's technology-based pollutant restrictions implement the minimum, applicable federal technology-based requirements. In addition, this Order contains effluent limitations more stringent than the minimum, federal technology-based requirements that are necessary to meet water quality standards. These limitations are not more stringent than required by the CWA.

Water quality-based effluent limitations have been scientifically derived to implement water quality objectives that protect beneficial uses. Both the beneficial uses and the water quality objectives have been approved pursuant to federal law and are the applicable federal water quality standards. To the extent that toxic pollutant water quality-based effluent limitations were derived from the CTR, the CTR is the applicable standard pursuant to section 131.38. The scientific procedures for calculating the individual water quality-based effluent limitations for priority pollutants are based on the CTR-SIP, which was approved by USEPA on May 18, 2000. With the exception of certain surface water standards changes adopted as part of the Nitrogen/TDS Basin Plan Amendment (see Section H, above), all beneficial uses and water quality objectives contained in the Basin Plan were approved under state law and submitted to and approved by USEPA prior to May 30, 2000. Any water quality objectives and beneficial uses submitted to USEPA prior to May 30, 2000, but not approved by USEPA before that date, are nonetheless "applicable water quality standards for purposes of the CWA" pursuant to section 131.21(c)(1). The surface water standards changes adopted as part of the Nitrogen/TDS Basin Plan Amendment were approved by USEPA on June 20, 2007.

**N. Antidegradation Policy.** Section 131.12 requires that the state water quality standards include an antidegradation policy consistent with the federal policy. The State Water Board established California's antidegradation policy in State Water Board Resolution No. 68-16. Resolution No. 68-16 incorporates the federal antidegradation policy where the federal policy applies under federal law. Resolution No. 68-16 requires that existing quality of waters be maintained unless degradation is justified based on specific findings. The Regional Water Board's Basin Plan implements, and incorporates by reference, both the state and federal antidegradation policies. As discussed in the Fact Sheet, discharges in accordance with the terms and conditions of this Order will not result in a lowering of water quality. Therefore, the permitted discharges are consistent with the antidegradation provisions of section 131.12 and State Water Board Resolution No. 68-16.

**O. Anti-Backsliding Requirements.** Sections 402(o)(2) and 303(d)(4) of the CWA and federal regulations at title 40, Code of Federal Regulations section 122.44(l) prohibit backsliding in NPDES permits. These anti-backsliding provisions require effluent limitations in a reissued permit to be as stringent as those in the previous permit. With the exception of the average monthly limitation for free cyanide, all effluent limitations in this Order are at least as stringent as the effluent limitations in the previous Orders and are consistent with the anti-backsliding requirements of the CWA and federal regulations.

**P. Endangered Species Act.** This Order does not authorize any act that results in the taking of a threatened or endangered species or any act that is now prohibited, or becomes prohibited in the future, under either the California Endangered Species Act (Fish and Game Code sections 2050 to 2097) or the Federal Endangered Species Act (16 U.S.C.A. sections 1531 to 1544). This Order requires compliance with effluent limits, receiving water limits, and other requirements to protect the beneficial uses of waters of the state. The Discharger is responsible for meeting all requirements of the applicable Endangered Species Act.

**Q. Monitoring and Reporting.** Section 122.48 requires that all NPDES permits specify requirements for recording and reporting monitoring results. Water Code sections 13267 and 13383 authorizes the Regional Water Board to require technical and monitoring reports. The Monitoring and Reporting Program establishes monitoring and reporting requirements to implement federal and State requirements. This Monitoring and Reporting Program is provided in Attachment E.

**R. Pretreatment:** The Discharger has established an approved regional pretreatment program. The approved pretreatment program and its components, such as Ordinance No.97-OR5, local limits (adopted by the Discharger in 2000), and control mechanisms, among others, are hereby made an enforceable condition of this Order.

**S. Biosolids Requirements.** On February 19, 1993, the USEPA issued a final rule for the use and disposal of sewage sludge, 40 CFR, Part 503. This rule requires that producers of sewage sludge meet certain reporting, handling, and disposal requirements. The State of California has not been delegated the authority to implement this program, therefore, the U.S. Environmental Protection Agency is the implementing agency. However, this Order includes Regional Water Board biosolids requirements.

**T. State General Waste Discharge Requirements for Sanitary Sewer Systems.** The State Water Board issued General Waste Discharge Requirements for Sanitary Sewer Systems, Water Quality Order No. 2006-0003 on May 2, 2006, requiring public agencies that own sanitary sewer systems comprised of more than one mile of pipes or sewer lines, to enroll for coverage under the General Order. The General Order requires agencies to develop sanitary sewer management plans (SSMPs) and report all sanitary sewer overflows (SSOs).

This Order requires the Discharger and other governmental agencies[2] to obtain enrollment for regulation under the General Water Quality Order No. 2006-0003. The Discharger has already enrolled.

---

[2] *Member agencies and sewering agencies discharging wastewater into the Facility.*

**U. Standard and Special Provisions.** Standard Provisions, which apply to all NPDES permits in accordance with section 122.41, and additional conditions applicable to specified categories of permits in accordance with section 122.42, are provided in Attachment D. The Discharger must comply with all standard provisions and with those additional conditions that are applicable under section 122.42. The Regional Water Board has also included in this Order special provisions applicable to the Discharger. The rationale for the special provisions contained in this Order is provided in the attached Fact Sheet.

**V. Provisions and Requirements Implementing State Law.** The provisions/requirements in subsections IV.B, IV.C, V.B, and VI.C. of this Order are included to implement state law only. These provisions/requirements are not required or authorized under the federal CWA; consequently, violations of these provisions/requirements are not subject to the enforcement remedies that are available for NPDES violations.

**W. Notification of Interested Parties.** The Regional Water Board has notified the Discharger and interested agencies and persons of its intent to prescribe Waste Discharge Requirements for the discharge and has provided them with an opportunity to submit their written comments and recommendations. Details of notification are provided in the Fact Sheet of this Order.

**X. Consideration of Public Comment.** The Regional Water Board, in a public meeting, heard and considered all comments pertaining to the discharge. Details of the Public Hearing are provided in the Fact Sheet of this Order.

**IT IS HEREBY ORDERED**, that this Order supersedes Order No. R8-2006-0010 as amended by Orders No. R8-2007-0045 and No. R8-2007-0078; Order No. R8-2008-0028, and Order No. R8-2004-0020 as amended by Order Nos. R8-2006-0038, and R8-2007-0078, except for enforcement purposes, and, in order to meet the provisions contained in division 7 of the Water Code (commencing with section 13000) and regulations adopted thereunder, and the provisions of the federal Clean Water Act (CWA) and regulations and guidelines adopted thereunder, the Discharger shall comply with the requirements in this Order.

## III. DISCHARGE PROHIBITIONS

**A.** The direct discharge of secondary treated wastewater to Chino Creek and Reach 1 of Cucamonga Creek other than when the flow[3] in the creeks results in a dilution of 20:1 or more at the point of discharge is prohibited.

**B.** Discharge of wastewater at a location or in a manner different from those described in this Order is prohibited.

**C.** The bypass or overflow of untreated wastewater or wastes to surface waters or surface water drainage courses is prohibited, except as allowed in Standard Provision I.G. of Attachment D, Federal Standard Provisions.

**D.** The discharge of any substances in concentrations toxic to animal or plant life is prohibited.

**E.** The discharge of any radiological, chemical, or biological warfare agent or high level radiological waste is prohibited.

## IV. EFFLUENT LIMITATIONS AND DISCHARGE SPECIFICATIONS

### A. Effluent Limitations –Discharge Points (DP) 001, 002, 003, and 004

Unless otherwise specifically specified hereinafter, compliance with the following effluent limitations is measured at monitoring locations M-001, M-002, M-003 and M-004 as described in the attached MRP (Attachment E).

**1. Final Effluent Limitations for discharges under conditions <u>without</u> 20:1 dilution in the receiving water – DPs 001, 002, 003 and 004**

a. The Discharge shall maintain compliance with the following effluent limitations at:

(1) DPs 001, 002, 003 and 004 with compliance measured at Monitoring Locations M-001A & B, M-002A & B, M-003 and M-004, respectively, as described in the attached MRP:

**Table 6. Effluent Limitations at DP 001 through DP 004**

| Parameter | Units | Effluent Limitations | | | | |
|---|---|---|---|---|---|---|
| | | Average Monthly | Average Weekly | Maximum Daily | Instantaneous Minimum | Instantaneous Maximum |
| Biochemical Oxygen Demand 5-day @ 20°C | mg/L | 20 | 30 | -- | -- | -- |
| Total Suspended Solids | mg/L | 20 | 30 | -- | -- | -- |
| Ammonia-Nitrogen | mg/L | 4.5 | -- | -- | -- | -- |
| Total Chlorine Residual[3] | mg/L | | | | | 0.1 |

(2) DPs 001 and 002 with compliance measured at Monitoring Locations M-001B and M-002A, respectively, as described in the attached MRP:

[3] *See Section VII.M. – Compliance Determination.*

**Table 7. Effluent Limitations Applicable at DP 001 and DP 002 only**

| Parameter | Units | Effluent Limitations | | |
|---|---|---|---|---|
| | | Average Monthly | Average Weekly | Maximum Daily |
| Free Cyanide | µg/L | 4.2 | -- | 8.5 |
| Bis(2-ethylhexyl) Phthalate | µg/L | 5.9 | | 11.9 |
| Selenium | µg/L | 4.1 | | 8.2 |

(3) DP 003 with compliance measured at Monitoring Location M-003, as described in the attached MRP:

**Table 8. Effluent Limitations Applicable at DP 003 only**

| Parameter | Units | Effluent Limitations | | |
|---|---|---|---|---|
| | | Average Monthly | Average Weekly | Maximum Daily |
| Free Cyanide | µg/L | 4.6 | -- | 7.3 |
| Bromodichloromethane | µg/L | 46 | -- | 92 |

(4) DP 004 with compliance measured at Monitoring Location M-004, as described in the attached MRP:

**Table 9. Effluent Limitations Applicable at DP 004 only**

| Parameter | Units | Effluent Limitations | | |
|---|---|---|---|---|
| | | Average Monthly | Average Weekly | Maximum Daily |
| Free Cyanide | µg/L | 8.5 | -- | 4.3 |
| Bis(2-ethylhexyl) Phthalate | µg/L | 5.9 | -- | 11.9 |

b. **Percent Removal:** The average monthly percent removal of BOD 5-day 20°C and total suspended solids shall not be less than 85 percent. (See Compliance Determination Section VII.N.)

c. **TDS Limitations** - The lower of the two total dissolved solids (TDS) limits specified in (1) or (2), below, is the limit.

(1) The 12-month flow weighted running average TDS constituent concentration and mass emission rates shall not exceed 550 mg/L and 366,960 lbs/day[4], respectively. This limitation may be met on an agency-wide basis using flow weighted averages of the discharges from the Discharger's RP-1, RP-4, RP-5 and CCWRF, or

(2) The 12-month flow weighted running average TDS concentration shall not exceed the 12-month flow weighted running average TDS concentration in the water supply by more than 250 mg/L[5]. This limitation may be met on an agency-wide basis using flow weighted averages of the water supplied to the Discharger's RP-1, RP-4, RP-5 and CCWRF service areas.

d. The 12-month flow weighted running average Total Inorganic Nitrogen (TIN) concentration and mass emission rates shall not exceed 8 mg/L and 5,338 lbs/day[6], respectively. This limitation may be met on an agency-wide basis using flow weighted averages of the discharges from the Discharger's RP-1, RP-4, RP-5 and CCWRF.

e. The discharge shall at all times be adequately oxidized, filtered, and disinfected treated wastewater and shall meet the following limitations.

(1) The turbidity of the filtered wastewater shall not exceed any of the following:

(a) Average of 2 Nephelometric Turbidity Unit (NTU) within any 24-hour period;

(b) 5 NTU more than 5 percent of the time in any 24-hour period; and

(c) 10 NTU at any time.

(2) The disinfected effluent shall meet the following:

(a) When chlorine disinfection process is utilized following filtration, a CT (the product of total chlorine residual and modal contact time measured at the same point) value of not less than 450 milligram-minutes per liter at all times with a modal contact time of at least 90 minutes[7], based on peak dry weather design flow[8;] shall be provided[9].

---

[4] *Based on wasteload allocation volume of 80 mgd and concentration of 550 mg/L.*

[5] *See Section VII.L. - Compliance Determination.*

[6] *Based on wasteload allocation volume of 80 mgd and concentration of 8 mg/L.*

[7] *The modal contact time requirement is applicable only to the use of recycled water and not to surface water discharges, provided the receiving water provides a 1:1 dilution. The receiving water considered here shall exclude upstream POTW effluent flow.*

[8] *"Peak Dry Weather Flow" means the arithmetic mean of the maximum peak flow rates sustained over some period of time (for example three hours) during the maximum 24-hour dry weather period. Dry weather period is defined as period of little or no rainfall.*

(b) When a disinfection process combined with the filtration process is utilized, the combined process shall demonstrate[10] inactivation and/or removal of 99.999 percent of the plaque-forming units of F-specific bacteriophage MS-2[11], or polio virus in the wastewater. A virus that is at least as resistant to disinfection as polio virus may be used for purposes of the demonstration.

(c) The weekly average concentration of total coliform bacteria shall not exceed a Most Probable Number (MPN) of 2.2 total coliform bacteria per 100 milliliters (ml). (see Compliance Determination VII.J.1., below)

(d) The number of total coliform bacteria shall not exceed an MPN of 23 total coliform bacteria per 100 ml in more than one sample in any 30-day period.

(e) No total coliform bacteria sample shall exceed an MPN of 240 total coliform bacteria per 100 ml.

f. There shall be no visible oil and grease in the discharge.

g. The pH of the discharge shall be within 6.5 to 8.5 pH[12].

h. Wastewater discharged at DP 001 shall be limited to treated and disinfected effluent that meets the conditions in Section IV.A.1.

i. Wastewater discharged at DP 002 through DP 004 shall be limited to treated and disinfected effluent that meets the conditions in Section IV.A.1., except for discharges of treated wastewater that meets the conditions specified in Section IV.A.4., when the flow[13] in Reaches 1B or 2 of Chino Creek or Reach 1 of Cucamonga Creek results in a dilution of 20:1 or more at the point of discharge.

**2. Interim Effluent Limitations – Not Applicable**

---

[9] *Modal contact time and CT shall be calculated based on the minimum one-hour average value in a 24-hr period.*

[10] *Meeting the discharge limits in A.1.e.(2).(c),(d), and (e) shall constitute the demonstration required by this sub-paragraph.*

[11] *F-Specific bacteriophage MS-2 means a strain of a specific type of virus that infects coliform bacteria that is traceable to the American Type Culture Collection (ATCC) 15597B1) and is grown on lawns of E. coli (ATCC 15597).*

[12] *See Section VII.K. Compliance Determination.*

[13] *Exclusive of discharges to surface waters from upstream publicly owned treatment works.*

### 3. Toxicity Requirements/Discharge Specifications

a. There shall be no acute or chronic toxicity in the plant effluent nor shall the plant effluent cause any acute or chronic toxicity in the receiving water. All waters shall be maintained free of toxic substances in concentrations which are toxic to, or which produce detrimental physiological responses in human, plant, animal, or indigenous aquatic life. This Order contains no numeric limitation for toxicity. However, the Discharger shall conduct chronic toxicity monitoring.

b. The Discharger shall implement the accelerated monitoring as specified in Attachment E when the result of any single chronic toxicity test of the effluent exceeds 1.0 TUc.

### 4. Effluent Limitations at DPs 002, 003, and 004, Under Conditions <u>with</u> 20:1 or More Dilution

The discharge of treated and disinfected effluent when the creek flow[14] at monitoring locations R-002U, R-003U, and/or R-004U results in a dilution of 20:1 (receiving water flow : wastewater flow) or more shall maintain compliance with the following effluent limitations at DPs 002, 003, and/or 004 with compliance measured at Monitoring Locations M002, M003 and M-004, respectively, as described in the attached MRP.

a. Numeric Effluent Limitations

**Table 10. Effluent Limitations Under 20:1 Dilution**

| Parameter | Units | Effluent Limitations | | | |
|---|---|---|---|---|---|
| | | Average Monthly | Average Weekly | Instantaneous Minimum | Instantaneous Maximum |
| Biochemical Oxygen Demand 5-day @ 20°C | mg/L | 30 | 45 | - - | - - |
| Total Suspended Solids | mg/L | 30 | 45 | - - | - - |
| Total Residual Chlorine | mg/L | - | - | - | 2.1 |

b. Treated wastewater shall at all times be adequately oxidized and disinfected wastewater and shall meet the following limitations:

(1) The weekly average number of coliform bacteria does not exceed a median of 23 per 100 milliliters as determined from the daily coliform bacteria values for the last seven (7) days. (see also Compliance Determination VII.J.2., below)

[14] *Exclusive of discharges to surface waters from upstream publicly owned treatment works.*

(2) The discharge shall be considered adequately oxidized if the 5-day @ 20°C Biochemical Oxygen Demand and Total Suspended Solids constituent concentrations of the discharge are less than or equal to the limitations shown in IV.A.4.a., above.

c. The monthly average biochemical oxygen demand and suspended solids concentrations of the discharge shall not be greater than fifteen percent (15%) of the monthly average influent concentration.

d. The pH of the discharge shall be within 6.5 to 8.5 pH[15].

## B. Land Discharge Specifications – Not Applicable

## C. Reclamation Specifications – DP 005 through DP 008

1. Upon the effective date of this Order, the use of recycled water for parks, landscape irrigation, and/or other similar uses shall maintain compliance with the following effluent limitations at DP 005 through DP 008 with compliance measured at monitoring locations REC-001 through REC-004, respectively, and where representative samples of recycled water can be obtained for laboratory testing and analysis as described in the attached Monitoring and Reporting Program (Attachment E). The Discharger shall submit for approval by the Executive Officer a list of other monitoring location(s) not specified herein where representative samples of recycled water could be obtained for laboratory testing and analysis.

   a. Physical/Biological Limitations:

**Table 11. Recycled Water Effluent Limitations**

| Parameter | Units | Effluent Limitations | |
|---|---|---|---|
| | | Average Monthly | Average Weekly |
| Biochemical Oxygen Demand 5-day @ 20°C | mg/L | 20 | 30 |
| Total Suspended Solids | mg/L | 20 | 30 |

   b. TDS Limitations: The following TDS limitations apply to recycled water uses, except groundwater recharge, that would affect underlying local Groundwater Management Zone(s). These limitations may be met on an agency-wide basis using flow-weighted averages of the discharges from the Discharger's RP-1, RP-4, RP-5 and CCWRF.

[15] *See Section VII.K. Compliance Determination*

(1) If maximum benefit is demonstrated (see Provisions VI.C.6.), the 12-month flow weighted running average total dissolved solids concentration shall not exceed 550 mg/L.

(2) If maximum benefit is not demonstrated (see Provisions VI.C.6.), the 12-month flow weighted running average total dissolved solids concentration shall not exceed the following:

**Table 12. Recycled Water Effluent TDS Limitations**

| Groundwater Management Zone | TDS limit, mg/L |
|---|---|
| Chino 1 | 280 |
| Chino 2 | 250 |
| Chino 3 | 260 |

c. Recycled water described in Section 60307(a) of Division 4, Chapter 3, Title 22, California Code of Regulations and for irrigation of food crops, parks and playground, school yards, residential landscaping and other irrigation uses not specified in Section 60304(a) of Division 4, Chapter 3, Title 22, California Code of Regulations or not prohibited in other Sections of the California Code of Regulations shall at all times be adequately oxidized, filtered, and disinfected tertiary treated wastewater and shall meet the following limitations:

(1) The turbidity of the filter effluent when filtration is through natural undisturbed soils or a bed of filter media shall not exceed any of the following:

(a) Average of 2 Nephelometric Turbidity Units (NTU) within any 24-hour period;
(b) 5 NTU more than 5 percent of the time in any 24-hour period; and
(c) 10 NTU at any time.

(2) The disinfected effluent shall meet the following:

(a) The weekly average total coliform bacteria[16] shall not exceed a Most Probable Number (MPN) of 2.2 total coliform bacteria per 100 milliliters (ml).
(b) The number of total coliform organism shall not exceed an MPN of 23 total coliform bacteria per 100 ml in more than one sample in any 30-day period.
(c) No total coliform sample shall exceed an MPN of 240 total coliform bacteria per 100 ml.

[16] *See Compliance Determination Section VII.J.1.*

(d) A chlorine disinfection process following filtration that provides a CT (the product of total chlorine residual and modal contact time[17] measured at the same point) value of not less than 450 milligram-minutes per liter at all times with a modal contact time of at least 90 minutes, based on peak dry weather design flow.

d. Recycled water used for irrigation of food crops where the edible portion is produced above ground and not contacted by the recycled water shall at all times be adequately oxidized and disinfected so that average weekly total coliform bacteria in the disinfected effluent does not exceed a most probable number (MPN) of 2.2 per 100 milliliters utilizing the bacteriological results of the last seven days for which analyses have been completed, and the number of total coliform bacteria does not exceed an MPN of 23 per 100 milliliters in more than one sample in any 30-day period.

e. Recycled water used for the uses listed below shall be an oxidized and disinfected water so that the average weekly total coliform bacteria[18] in the disinfected effluent does not exceed a most probable number (MPN) of 23 per 100 milliliters utilizing the bacteriological results of the last seven days for which analyses have been completed, and the number of total coliform bacteria does not exceed an MPN of 240 per 100 milliliters in more than one sample in any 30 day period.

(1) Industrial boiler feed, nonstructural fire fighting, backfill consolidation around nonpotable piping, soil compaction, mixing concrete, dust control on roads and streets, cleaning roads, sidewalks and outdoor work areas and industrial process water that will not come into contact with workers.
(2) Irrigation of cemeteries, freeway landscaping, restricted access golf courses, ornamental nursery stock and sod farms where access by the general public is not restricted, pasture for animals producing milk for human consumption, and any nonedible vegetation where access is controlled so that irrigated area cannot be used as if it were part of a park, playground or school yard.

f. For recycled water uses specified in Sections 60304 and 60307 of Title 22 where filtration is provided pursuant Section 60301.320(a) and coagulation is not used as part of the treatment process, the Discharger shall comply with the following:

(1) The turbidity of the influent to the filters is continuously measured and the influent turbidity does not exceed 5 NTU for more than 15 minutes and never exceeds 10 NTU;
(2) The filtered wastewater turbidity shall not exceed 2 NTU within any 24-hour period; and;

---

[17] *Modal contact time shall be calculated daily based on the minimum one-hour average value in a 24-hour period.*

[18] *See Compliance Determination Section VII.J.2.*

(3) Should the filter influent turbidity exceed 5 NTU for more than 15 minutes, chemical addition shall be automatically activated if available, if not, the wastewater shall be diverted.

2. For new reuse sites, the use of recycled water shall only commence after the California Department of Public Health (CDPH) grants final approval for such use. The Discharger shall provide the Regional Water Board with a copy of the CDPH approval letter within 30 days of the approval notice.

3. The Discharger shall be responsible for assuring that recycled water is delivered and utilized in conformance with this Order, the recycling criteria contained in Title 22, Division 4, Chapter 3, Sections 60301 through 60355, California Code of Regulations. The Discharger shall conduct periodic inspections of the facilities of the recycled water users to monitor compliance by the users with this Order.

4. The Discharger shall establish and enforce Rules and Regulations for Recycled Water users, governing the design and construction of recycled water use facilities and the use of recycled water in accordance with the uniform statewide recycling criteria established pursuant to the California Water Code Section 13521.

   a. Use of recycled water by the Discharger shall be consistent with its Rules and Regulations for Recycled Water Use.

   b. Any revisions made to the Rules and Regulations shall be subject to the review of the Regional Water Board, the California Department of Public Health, and the County Environmental Health Department. The revised Rules and Regulations or a letter certifying that the Discharger's Rules and Regulations contain the updated provisions in this Order, shall be submitted to the Regional Water Board within 60 days of adoption of this Order by the Regional Water Board.

5. The Discharger shall, within 60 days of the adoption of this Order, review and update as necessary its program to conduct compliance inspections of recycled water reuse sites. Inspections shall determine the status of compliance with the Discharger's Rules and Regulations for Recycled Water Use.

6. The storage, delivery, or use of recycled water shall not individually or collectively, directly or indirectly, result in a pollution or nuisance, or adversely affect water quality, as defined in the California Water Code.

7. Prior to delivering recycled water to any new user, the Discharger shall submit to the California Department of Public Health and the County Environmental Health Department a report containing the following information for review and approval:

   a. The average number of persons estimated to be served at each use site area on a daily basis.

b. The specific boundaries of the proposed use site area including a map showing the location of each facility, drinking water fountain, and impoundment to be used.

c. The person or persons responsible for operation of the recycled water system at each use area.

d. The specific use to be made of the recycled water at each use area.

e. The methods to be used to assure that the installation and operation of the recycled system will not result in cross connections between the recycled water and potable water piping systems. This shall include a description of the pressure, dye or other test methods to be used to test the system.

f. Plans and specifications which include following:
(1) Proposed piping system to be used.
(2) Pipe locations of both the recycled and potable systems.
(3) Type and location of the outlets and plumbing fixtures that will be accessible to the public.
(4) The methods and devices to be used to prevent backflow of recycled water into the potable water system.
(5) Plan notes relating to specific installation and use requirements.

8. The Discharger shall require the user(s) to designate an on-site supervisor responsible for the operation of the recycled water distribution system within the recycled water use area. The supervisor shall be responsible for enforcing this Order, prevention of potential hazards, the installation, operation and maintenance of the distribution system, maintenance of the distribution and irrigation system plans in "as-built" form, and for the distribution of the recycled wastewater in accordance with this Order.

9. Recycled water shall at all times be maintained within the property lines of any user. There shall be no direct or indirect discharge of recycled water into drainage systems that could affect surface water quality standards.

## D. Stormwater Discharge Specifications – S-001 and S-002

1. Storm water[19] discharges shall not:

a. Cause or contribute to a violation of any applicable water quality standards contained in the Basin Plan or in the State or Federal regulations.

b. Cause or threaten to cause pollution, contamination, or nuisance.

c. Contain a hazardous substance equal to or in excess of a reportable quantity listed in 40 CFR Part 117 and/or 40 CFR Part 302.

---

19 *Storm water means storm water runoff and surface runoff and drainage.*

d. Adversely impact human health or the environment.

e. Result in noncompliance with the lawful requirements of municipalities, counties, drainage districts, and other local agencies on storm water discharges into storm drain systems or other courses under their jurisdiction.

2. Stormwater discharges from this Facility shall comply with the Stormwater Requirements in Attachment J and K.

3. The Discharger must update and implement the Storm Water Pollution Prevention Plan for the Facility in accordance with Attachment J of this Order.

## V. RECEIVING WATER LIMITATIONS

### A. Surface Water Limitations

1. Receiving water limitations are based upon water quality objectives contained in the Basin Plan. As such, they are a required part of this Order. The discharge shall not cause the following in Prado Park Lake, Reach 1 of Cucamonga Creek, Reaches 1A, 1B and 2 of Chino Creek or Reach 3 of the Santa Ana River and downstream reaches:

   a. Coloration of the receiving waters, which causes a nuisance or adversely affects beneficial uses.

   b. Deposition of oil, grease, wax or other materials in the receiving waters in concentrations which result in a visible film or in coating objects in the water, or which cause a nuisance or affect beneficial uses.

   c. An increase in the amounts of suspended or settleable solids in the receiving waters, which will cause a nuisance or adversely affect beneficial uses as a result of controllable water quality factors.

   d. Taste or odor-producing substances in the receiving waters at concentrations, which cause a nuisance or adversely affect beneficial uses.

   e. The presence of radioactive materials in the receiving waters in concentrations, which are deleterious to human, plant or animal life.

   f. The depletion of the dissolved oxygen concentration below 5.0 mg/L.

   g. The temperature of the receiving waters to be raised above 90°F (32°C) during the period of June through October, or above 78°F (26°C) during the rest of the year.

h. The concentration of pollutants in the water column, sediments, or biota to adversely affect the beneficial uses of the receiving water. The discharge shall not result in the degradation of inland surface water communities and populations, including vertebrate, invertebrate, and plant species.

2. The discharge of wastes shall not cause a violation of any applicable water quality standards for receiving waters adopted by the Regional Water Board or State Water Board, as required by the Clean Water Act and regulations adopted thereunder.

3. Pollutants not specifically mentioned and limited in this Order shall not be discharged at levels that will bioaccumulate in aquatic resources to levels, which are harmful to human health or animal life.

4. The discharge shall not contain constituent concentrations of mercury that will result in the bioaccumulation of methylmercury in fish flesh tissue greater than 0.3 milligram methylmercury/kilogram. (See also Section VI.C.1.e. and VI.C.2.a., below).

### B. Groundwater Limitations

The use of recycled water shall not cause the underlying groundwater to be degraded, to exceed water quality objectives, unreasonably affect beneficial uses, or cause a condition of pollution or nuisance.

## VI. PROVISIONS

### A. Standard Provisions

1. The Discharger shall comply with all Standard Provisions included in Attachment D of this Order.

2. The Discharger shall comply with the following provisions:

   a. Failure to comply with provisions or requirements of this Order, or violation of other applicable laws or regulations governing discharges from this Facility, may subject the Discharger to administrative or civil liabilities, criminal penalties, and/or other enforcement remedies to ensure compliance. Additionally, certain violations may subject the Discharger to civil or criminal enforcement from appropriate local, state, or federal law enforcement entities.

b. In the event the Discharger does not comply or will be unable to comply for any reason, with any prohibition, discharge limitations (e.g., maximum daily effluent limitation), or receiving water limitation of this Order, the Discharger shall notify the Regional Water Board by telephone (951) 782-4130 within 24 hours of having knowledge of such noncompliance, and shall confirm this notification in writing within five days, unless the Regional Water Board waives confirmation. The written notification shall state the nature, time, duration, and cause of noncompliance, and shall describe the measures being taken to remedy the current noncompliance and, prevent recurrence including, where applicable, a schedule of implementation. Other noncompliance requires written notification as above at the time of the normal monitoring report.

c. Neither the treatment nor the discharge of pollutants shall create a pollution, contamination, or nuisance as defined by Section 13050 of the CWC.

d. The Discharger shall take all reasonable steps to minimize or correct any adverse impact on the environment resulting from noncompliance with this Order, including such accelerated or additional monitoring as may be necessary to determine the nature and impact of the noncomplying discharge.

e. This Order may be modified, revoked and reissued, or terminated for cause including, but not limited to, the following:

   (1) Violation of any terms or conditions of this Order;
   (2) Obtaining this Order by misrepresentation or failure to disclose fully all relevant facts, or;
   (3) In addition to any other grounds specified herein, this Order may be modified or revoked at any time if, on the basis of any data, the Regional Water Board determines that continued discharges may cause unreasonable degradation of the aquatic environment.

f. If an effluent standard or discharge prohibition (including any schedule of compliance specified in such effluent standard or prohibition) is established under Section 307 (a) of the Clean Water Act for a toxic pollutant which is present in the discharge, and such standard or prohibition is more stringent than any limitation for that pollutant in this Order, this Order may be modified or revoked and reissued to conform to the effluent standard or discharge prohibition.

g. The Discharger shall file with the Regional Water Board a Report of Waste Discharge at least 180 days before making any material change in the character, location, or volume of the discharge. A material change includes, but is not limited to, the following:

   (1) Adding a major industrial waste discharge to a discharge of essentially domestic sewage, or adding a new process or product by an industrial facility resulting in a change in the character of the waste.
   (2) Significantly changing the disposal method or location, such as changing the disposal to another drainage area or water body.
   (3) Significantly changing the method of treatment.
   (4) Increasing the treatment plant design capacity beyond that specified in this Order.

h. The provisions of this Order are severable, and if any provision of this Order, or the application of any provision of this Order to any circumstance, is held invalid, the application of such provision to other circumstances, and the remainder of this Order, shall not be affected thereby.

i. The Discharger shall maintain a copy of this Order at the site so that it is available to site operating personnel at all times. Key operating personnel shall be familiar with its content.

j. The Discharger shall optimize chemical additions needed in the treatment process to meet waste discharge requirements so as to minimize total dissolved solid increases in the treated wastewater.

k. Collected screenings, sludge, and other solids removed from liquid wastes shall be disposed of in a manner approved by the Regional Water Board's Executive Officer.

l. The Discharger has demonstrated a correlation between the biological oxygen demand ($BOD_5$) and total organic carbon (TOC) concentrations in the effluent to the satisfaction of the Executive Officer. Therefore, compliance with the $BOD_5$ limits and monitoring requirements contained in this Order may be determined based on analyses of the TOC of the effluent.

m. In the event of any change in control or ownership of land or waste discharge facility presently owned or controlled by the Discharger, the Discharger shall notify the succeeding owner or operator of the existence of this Order by letter, a copy of which shall be forwarded to the Regional Water Board.

n. The treatment facilities shall be designed, constructed, operated, and maintained to prevent inundation or washout due to floods with a 100-year return frequency.

## B. Monitoring and Reporting Program (MRP) Requirements

The Discharger shall comply with the MRP, and future revisions thereto, in Attachment E of this Order. This monitoring and reporting program may be modified by the Executive Officer at any time during the term of this Order, and may include an increase in the number of parameters to be monitored, the frequency of the monitoring or the number and size of samples to be collected. Any increase in the number of parameters to be monitored, the frequency of the monitoring or the number and size of samples to be collected may be reduced back to the levels specified in the original monitoring and reporting program at the discretion of the Executive Officer.

## C. Special Provisions

### 1. Reopener Provisions

a. This Order will be reopened to address any changes in State or federal plans, policies or regulations that would affect the quality requirements for the discharges.

b. This Order may be reopened to include effluent limitations for pollutants determined to be present in the discharge in concentrations that pose a reasonable potential to cause or contribute to violations of water quality standards.

c. This Order may be reopened and modified in accordance with the requirements set forth at 40 CFR 122 and 124, to include the appropriate conditions or limits to address demonstrated effluent toxicity based on newly available information, or to implement any EPA-approved new State water quality standards applicable to effluent toxicity.

d. This Order may be reopened for modification, or revocation and reissuance, as a result of the detection of a reportable priority pollutant generated by special conditions included in this Order. These special conditions may be, but are not limited to, fish tissue sampling, whole effluent toxicity, monitoring requirements on internal waste stream(s), and monitoring for surrogate parameters. Additional requirements may be included in this Order as a result of the special condition monitoring data.

e. This Order may be reopened to include an appropriate bioaccumulation based effluent limit for mercury if test results (as required in Attachment E of this Order) show that the concentration levels of methylmercury in the fish tissue are at or above 0.3 milligrams per kilogram.

f. This Order may be reopened to incorporate appropriate biosolids requirements if the State Water Resources Control Board and the Regional Water Quality Control Board are given the authority to implement regulations contained in 40 CFR 503.

**2. Special Studies, Technical Reports and Additional Monitoring Requirements**

a. By September 1, 2009, the Discharger shall notify the Executive Officer of its continuous involvement with the comprehensive mercury investigation program currently being conducted by a group of Santa Ana River system dischargers. If the Discharger discontinues its involvement with this comprehensive program, the Discharger shall, within 60 days of that date, submit for the approval of the Executive Officer its plan for the annual testing of mercury levels in fish flesh samples collected from the Santa Ana River, upstream of, at, and downstream of the point of the discharge point. Upon approval, the Discharger shall implement the plan.

b. Toxicity Reduction Requirements.

(1) The Discharger shall develop an Initial Investigation Toxicity Reduction Evaluation (IITRE) work plan that describes the steps the Discharger intends to follow if required by Toxicity Requirements b.(2), below. The work plan shall include at a minimum:

(a) A description of the investigation and evaluation techniques that will be used to identify potential causes/sources of the exceedance, effluent variability, and/or efficiency of the treatment system in removing toxic substances. This shall include a description of an accelerated chronic toxicity testing program.

(b) A description of the methods to be used for investigating and maximizing in-house treatment efficiency and good housekeeping practices.

(c) A description of the evaluation process to be used to determine if implementation of a more detailed TRE\TIE is necessary.

(2) The Discharger shall implement the IITRE work plan whenever the results of chronic toxicity tests of the effluent exceed:

(a) A two month median value of 1.0 TUc for survival or reproduction endpoint or,

(b) Any single test value of 1.7 TUc for survival endpoint.

(3) The Discharger shall develop a detailed Toxicity Reduction Evaluation and Toxicity Identification Evaluation (TRE/TIE) work plan that shall describe the steps the Discharger intends to follow if the implemented IITRE fails to identify the cause of, or to rectify, the toxicity.

(4) The Discharger shall use as guidance, at a minimum, EPA manuals EPA/600/2-88/070 (industrial), EPA/600/4-89-001A (municipal), EPA/600/6-91/005F (Phase I), EPA/600/R-92/080 (Phase II), and EPA-600/R-92/081 (Phase III) to identify the cause(s) of toxicity. If during the life of this Order the aforementioned EPA manuals are revised or updated, the revised/updated manuals may also be used as guidance. The detailed TRE/TIE work plan shall include:

(a) Further actions to investigate and identify the cause of toxicity;

(b) Actions the Discharger will take to mitigate the impact of the discharge and to prevent the recurrence of toxicity; and

(c) A schedule for these actions.

(5) The Discharger shall implement the TRE/TIE workplan if the IITRE fails to identify the cause of, or rectify, the toxicity, or if in the opinion of the Executive Officer the IITRE does not adequately address an identified toxicity problem.

(6) The Discharger shall assure that adequate resources are available to implement the required TRE/TIE.

## 3. Best Management Practices and Pollution Prevention

### a. Pollutant Minimization Program

(1) The Discharger shall develop and conduct a Pollutant Minimization Program (PMP) as further described below when there is evidence (e.g., sample results reported as DNQ when the effluent limitation is less than the MDL, sample results from analytical methods more sensitive than those methods required by this Order, presence of whole effluent toxicity, health advisories for fish consumption, results of benthic or aquatic organism tissue sampling) that a priority pollutant is present in the effluent above an effluent limitation and either:

(a) A sample result is reported as DNQ and the effluent limitation is less than the RL; or
(b) A sample result is reported as ND and the effluent limitation is less than the MDL.

(2) The PMP shall include, but not be limited to, the following actions and submittals acceptable to the Regional Water Board:

(a) An annual review and semi-annual monitoring of potential sources of the reportable priority pollutant(s), which may include fish tissue monitoring and other bio-uptake sampling;

(b) Quarterly monitoring for the reportable priority pollutant(s) in the influent to the wastewater treatment system;

(c) Submittal of a control strategy designed to proceed toward the goal of maintaining concentrations of the reportable priority pollutant(s) in the effluent at or below the effluent limitation;

(d) Implementation of appropriate cost-effective control measures for the reportable priority pollutant(s), consistent with the control strategy; and

(e) An annual status report that shall be sent to the Regional Water Board including:

i. All PMP monitoring results for the previous year;
ii. A list of potential sources of the reportable priority pollutant(s);
iii. A summary of all actions undertaken pursuant to the control strategy; and
iv. A description of actions to be taken in the following year.

## 4. Construction, Operation and Maintenance Specifications

a. The Discharger's wastewater treatment plants shall be supervised and operated by persons possessing certificates of appropriate grade pursuant to Title 23, Division 3, Chapter 14, California Code of Regulations.

b. The Discharger shall provide safeguards to assure that should there be reduction, loss, or failure of electric power, the Discharger will comply with the requirements of this Order.

c. The Discharger shall update as necessary, the "Operation and Maintenance Manual(s) (O&M Manual)" which it has developed for the treatment facilities to conform to latest plant changes and requirements. The O&M Manual(s) shall be readily available to operating personnel onsite. The O&M Manual(s) shall include the following:

(1) Description of the treatment plant table of organization showing the number of employees, duties and qualifications and plant attendance schedules (daily, weekends and holidays, part-time, etc). The description should include documentation that the personnel are knowledgeable and qualified to operate the treatment facility so as to achieve the required level of treatment at all times.
(2) Detailed description of safe and effective operation and maintenance of treatment processes, process control instrumentation and equipment.
(3) Description of laboratory and quality assurance procedures.
(4) Process and equipment inspection and maintenance schedules.
(5) Description of safeguards to assure that, should there be reduction, loss, or failure of electric power, the Discharger will be able to comply with requirements of this Order.
(6) Description of preventive (fail-safe) and contingency (response and cleanup) plans for controlling accidental discharges, and for minimizing the effect of such events. These plans shall identify the possible sources (such as loading and storage areas, power outage, waste treatment unit failure, process equipment failure, tank and piping failure) of accidental discharges, untreated or partially treated waste bypass, and polluted drainage.

**5. Special Provisions for Municipal Facilities (POTWs Only)**

a. Sewer Collection System Requirements: The Discharger's collection system is part of the system that is subject to this Order. As such, the Discharger must properly operate and maintain its collection system (40 C.F.R. § 122.41(e)). The Discharger must report any non-compliance (40 C.F.R. § 122.41(l)(6) and (7)) and mitigate any discharge from the collection system in violation of this Order (40 C.F.R. § 122.41(d)). See the Order at Standard Provision VI.A.2.b. and Attachment D, subsections I.D, V.E, V.H, and I.C.

Furthermore, the General Waste Discharge Requirements for Collection System Agencies (Order No. 2006-0003 DWQ) contains requirements for operation and maintenance of collection systems and for reporting and mitigating sanitary sewer overflows. While the Discharger must comply with both Order No. 2006-0003 DWQ and this Order, the General Collection System WDR more clearly and specifically stipulates requirements for operation and maintenance and for reporting and mitigating sanitary sewer overflows. The Discharger and other governmental agencies that are discharging wastewater into the facility are required to obtain enrollment for regulation under Order No. 2006-0003-DWQ.

b. Sludge Disposal Requirements

(1) Collected screenings, sludge, and other solids removed from liquid wastes shall be disposed of in a manner that is consistent with State Water Board and Integrated Waste Management Board's joint regulations (Title 27) of the California Code of Regulations and approved by the Regional Water Board's Executive Officer.
(2) The use and disposal of biosolids shall comply with existing Federal and State laws and regulations, including permitting requirements and technical standards included in 40 CFR 503.
(3) Any proposed change in biosolids use or disposal practice from a previously approved practice should be reported to the Executive Officer and EPA Regional Administrator at least 90 days in advance of the change.
(4) The Discharger shall take all reasonable steps to minimize or prevent any discharge or biosolids use or disposal that has the potential of adversely affecting human health or the environment.

c. Pretreatment Program

(1) The Discharger shall update as necessary and implement an acceptable pretreatment program.

(2) The Discharger shall update as necessary the appropriate contractual agreements with all governmental agencies[20]. The contractual agreements shall give the Discharger the authority to implement and enforce the approved pretreatment program within the sewer service areas of the treatment Facility. The Discharger shall assure that any other steps necessary to provide this implementation and enforcement authority (e.g. adoption of ordinances, etc.) are taken by all governmental agencies. If a governmental agency has an EPA approved pretreatment program for any portion of the service area of the treatment facility, the Discharger's pretreatment program shall contain provisions ensuring that that governmental agency's program is implemented. In the event that any agency discharging to Discharger's facility fails to effectively implement its individual EPA approved pretreatment program, the Discharger shall implement and enforce its approved program within that agency's service area.

[20] *Member agencies and sewering agencies discharging wastewater into the Facility.*

(3) The Discharger shall ensure that the POTW[21] pretreatment program for all contributory agencies discharging to the Discharger's treatment facility are implemented and enforced. The Discharger shall be responsible and liable for the performance of all Control Authority pretreatment requirements contained in 40 CFR 403, including any subsequent regulatory revisions to Part 403. Where Part 403 or subsequent revisions place mandatory actions upon the Discharger as Control Authority but does not specify a timetable for completion of the actions, the Discharger shall submit for approval of the Regional Water Board's Executive Officer, a schedule for implementation of the required actions and shall implement the approved schedule. The schedule for implementation shall be submitted within six months from the date that such mandatory actions are established. For violations of pretreatment requirements, the Discharger shall be subject to enforcement actions, penalties, fines and other remedies by the EPA, or other appropriate parties, as provided in the CWA, as amended (33 USC 1351 et seq.). The EPA or the Regional Water Board may also initiate enforcement action against an industrial user (IU) for non-compliance with applicable standards and requirements as provided in the CWA.

(4) The Discharger shall perform the pretreatment functions as required in 40 CFR Part 403 including, but not limited to:

(a) Enforce the pretreatment requirements under 40 CFR 403.5 and 403.6;

(b) Implement the necessary legal authorities as provided in 40 CFR 403.8(f)(1);

(c) Implement the programmatic functions as provided in 40 CFR 403.8(f)(2);

(d) Publish a list of significant non-compliance as required by 40 CFR 403.8(f)(2)(vii); and

(e) Provide the requisite funding and personnel to implement the pretreatment program as provided in 40 CFR 403.8(f)(3).

(5) The following wastes shall not be introduced into the treatment works:

(a) Wastes which create a fire or explosion hazard in the treatment works;

(b) Wastes which will cause corrosive structural damage to treatment works, but, in no case, wastes with a pH lower than 5.0 unless the works are designed to accommodate such wastes;

[21] *Publicly owned treatment works.*

(c) Wastes at a flow rate and/or pollutant discharge rate which is excessive over relatively short time periods so that there is a treatment process upset and subsequent loss of treatment efficiency;

(d) Solid or viscous wastes in amounts that would cause obstruction to the flow in sewers or otherwise interfere with the proper operation of the treatment works.

(6) The Discharger shall ensure compliance with any existing or future pretreatment standard promulgated by EPA under Section 307 of the CWA or amendments thereto for any discharge to the municipal system.

(7) The Discharger shall comply with effluent standards or prohibitions established under Section 307(a) of the CWA for toxic pollutants within the time provided in the regulations that establish these standards or prohibitions, even if this Order has not yet been modified to incorporate the requirement.

(8) The Discharger shall require each user not in compliance with any pretreatment standard to submit periodic notice (over intervals not to exceed nine months) of progress toward compliance with applicable toxic and pretreatment standards developed pursuant to the CWA or amendments thereto. The Discharger shall forward a copy of such notice to the Regional Water Board and to the EPA Regional Administrator.

(9) The Discharger shall operate the wastewater collection system under a comprehensive industrial pretreatment and pollutant control program for the control of discharge of toxic wastes from point sources. If the California Department of Health Services identifies any contaminants that may pose a risk of contamination to a drinking water supply, it may designate those contaminants for inclusion in the pretreatment and source control program requirements for IEUA to minimize the possibility that the influent wastewater to RP-1 and RP-4 will be contaminated with such toxic chemicals. The source control program shall include:

(a) An assessment of the fate of the specified contaminant compounds through the wastewater and recycled water treatment systems.

(b) A source investigation and monitoring program focused on the specified contaminants.

(c) An outreach program to industrial, commercial and residential communities within the sewage collection agency's service area to manage and minimize the discharge of compounds of concern at the source.

(d) A proactive program for maintaining an inventory of compounds discharged into the wastewater collection system so that new compounds of concern can be evaluated rapidly.

### 6. Other Special Provisions

a. As necessary based on the consideration of evidence regarding the implementation of the maximum benefit commitments shown in Attachment L , the Regional Water Board will be asked to make a determination of whether those commitments are being satisfied. If the Regional Water Board finds that the maximum benefit commitments are not being satisfied, then the Discharger shall implement a mitigation program approved by the Regional Water Board for recycled water use in the Chino 1, 2 or 3 Groundwater Management Zones using recycled water in excess of the limitations applicable to the Groundwater Management Zones (Sections IV.A.1.c. and IV.A.1.d., and Sections IV.C.1.b.). A proposed mitigation plan and schedule shall be submitted within 60-days of notification by the Regional Water Board Executive Officer of the need to do so. The Discharger shall implement the plan and schedule upon approval by the Regional Water Board.

### 7. Compliance Schedules – Not Applicable

## VII. COMPLIANCE DETERMINATION

Compliance with the effluent limitations contained in section IV of this Order will be determined as specified below:

### A. General.

Compliance with effluent limitations for priority pollutants shall be determined using sample reporting protocols defined in the MRP and Attachment A of this Order. For purposes of reporting and administrative enforcement by the Regional and State Water Boards, the Discharger shall be deemed out of compliance with effluent limitations if the concentration of the priority pollutant in the monitoring sample is greater than the effluent limitation and greater than or equal to the reporting level (RL).

### B. Multiple Sample Data.

When determining compliance with an AMEL or MDEL for priority pollutants and more than one sample result is available, the Discharger shall compute the arithmetic mean unless the data set contains one or more reported determinations of “Detected, but Not Quantified” (DNQ) or “Not Detected” (ND). In those cases, the Discharger shall compute the median in place of the arithmetic mean in accordance with the following procedure:

1. The data set shall be ranked from low to high, ranking the reported ND determinations lowest, DNQ determinations next, followed by quantified values (if any). The order of the individual ND or DNQ determinations is unimportant.

2. The median value of the data set shall be determined. If the data set has an odd number of data points, then the median is the middle value. If the data set has an even number of data points, then the median is the average of the two values around the middle unless one or both of the points are ND or DNQ, in which case the median value shall be the lower of the two data points where DNQ is lower than a value and ND is lower than DNQ.

**C. Average Monthly Effluent Limitation (AMEL).**

If the average (or when applicable, the median determined by subsection B above for multiple sample data) of daily discharges over a calendar month exceeds the AMEL for a given parameter, this will represent a single violation, though the Discharger will be considered out of compliance for each day of that month for that parameter (e.g., resulting in 31 days of non-compliance in a 31-day month). If only a single sample is taken during the calendar month and the analytical result for that sample exceeds the AMEL, the Discharger will be considered out of compliance for that calendar month. The Discharger will only be considered out of compliance for days when the discharge occurs. For any one calendar month during which no sample (daily discharge) is taken, no compliance determination can be made for that calendar month.

**D. Average Weekly Effluent Limitation (AWEL).**

If the average or when applicable, the median determined by subsection B above for multiple sample data of daily discharges over a calendar week exceeds the AWEL for a given parameter, this will represent a single violation, though the Discharger will be considered out of compliance for each day of that week for that parameter, resulting in 7 days of non-compliance. If only a single sample is taken during the calendar week and the analytical result for that sample exceeds the AWEL, the Discharger will be considered out of compliance for that calendar week. The Discharger will only be considered out of compliance for days when the discharge occurs. For any one calendar week during which no sample (daily discharge) is taken, no compliance determination can be made for that calendar week.

**E. Maximum Daily Effluent Limitation (MDEL).**

If a daily discharge or when applicable, the median determined by subsection B above for multiple sample data of a daily discharge exceeds the MDEL for a given parameter, the Discharger will be considered out of compliance for that parameter for that 1 day only within the reporting period. For any 1 day during which no sample is taken, no compliance determination can be made for that day.

**F. Instantaneous Minimum Effluent Limitation.**

If the analytical result of a single grab sample is lower than the instantaneous minimum effluent limitation for a parameter, the Discharger will be considered out of compliance for that parameter for that single sample. Non-compliance for each sample will be considered separately (e.g., the results of two grab samples taken within a calendar day that both are lower than the instantaneous minimum effluent limitation would result in two instances of non-compliance with the instantaneous minimum effluent limitation).

**G. Instantaneous Maximum Effluent Limitation.**

If the analytical result of a single grab sample is higher than the instantaneous maximum effluent limitation for a parameter, the Discharger will be considered out of compliance for that parameter for that single sample. Non-compliance for each sample will be considered separately (e.g., the results of two grab samples taken within a calendar day that both exceed the instantaneous maximum effluent limitation would result in two instances of non-compliance with the instantaneous maximum effluent limitation).

**H. 12-Month Running Average Effluent Limitation (12-MRAEL).**

Compliance with the 12-month flow weighted running average limits under Discharge Specification IV.A.1.c., IV.A.1.d., and IV.C.1.b. shall be determined by the arithmetic mean of the last twelve monthly averages.

**I. Turbidity Limitations.**

The Discharger shall be considered in compliance with Discharge Specifications IV.A.1.e.(1) and IV.C.1.c.(1), if the following conditions are met. If the Discharger is using a properly operating backup turbidimeter, the reading of the backup turbidimeter shall be considered in determining whether there has been an actual noncompliance:

1. There are no excursions above the limits specified in Discharge Specifications IV.A.1.e.(1)(a) and (b) and IV.C.1.c.(1)(a) and (b);
2. Exceedances of the “10 NTU at any time” turbidity requirement do not exceed a duration of one minute.
3. The apparent exceedance was caused by interference with, or malfunction of, the monitoring instrument.

**J. Coliform Organism Effluent Limitations.**

1. Compliance with the average weekly total coliform limit expressed in Discharge Specification IV.A.1.e.(2)(b), IV.C.1.c.(2)(a), and IV.C.1.d. shall be based on a median of test results from the previous 7 days. To comply with the limit, the 7-day median MPN must not exceed 2.2 per 100 milliliters on any day during the week. However, only one violation is recorded for each calendar week, even if the 7-day median MPN value is greater than 2.2 for more than one day in the week.

2. Compliance with the average weekly total coliform limit expressed in Discharge Specification IV.C.1.e. shall be based on a median of test results from the previous 7 days. To comply with the limit, the 7-day median MPN must not exceed 23 per 100 milliliters on any day during the week. However, only one violation is recorded for each calendar week, even if the 7-day median MPN value is greater than 23 for more than one day in the week.

**K. pH Effluent Limitations.**

Pursuant to 40 CFR 401.17, the Discharger shall be in compliance with the pH limitations specified in the Discharge Specification IV.A.1.g., IV.A.4.d., above, provided that both of the following conditions are satisfied:

1. The total time during which the pH values are outside the required range of 6.5-8.5 pH values shall not exceed 7 hours and 26 minutes in any calendar month; and
2. No individual excursion from the range of pH values shall exceed 60 minutes.

**L. TDS Increment Limit.**

Compliance with Discharge Specifications IV.A.1.c.(2) shall be based on IEUA's (RP-1, RP- 4, RP-5, and CCWRF) agency-wide flow weighted TDS water supply quality and shall be determined from TDS analysis of secondary treated wastewater. The Discharger shall provide the necessary calculations showing the overall TDS water supply quality.

**M. Total Chlorine Residual Limitation (TCR)**

Compliance determinations for total chlorine residual shall be based on 99% compliance. To determine 99% compliance with the effluent limitation for total chlorine residual, the following conditions shall be satisfied:

1. For TCR Limit specified in Section IV.A.1. :
   - a The total time during which the total chlorine residual values are above 0.1 mg/L (instantaneous maximum value) shall not exceed 7 hours and 26 minutes in any calendar month;
   - b No individual excursion from 0.1 mg/L value shall exceed 5 minutes; and
   - c No individual excursion shall exceed 5.0 mg/L.

2. For TCR Limit specified in Section IV.A.4.:
   - a The total time during which the total chlorine residual values are above 2.1 mg/L (instantaneous maximum value) shall not exceed 7 hours and 26 minutes in any calendar month;
   - b No individual excursion from 2.1 mg/L value shall exceed 5 minutes; and
   - c No individual excursion shall exceed 10.5 mg/L.

**N. Percent Removal**

Compliance with the 85 percent average monthly removal requirement (See Effluent Limitations and Discharge Specifications Section IV.A.1.b.)shall be determined for each individual facility (RP-1, RP-4, RP- 5, and CCWRF).

**O. Priority Pollutants.**

The Discharger shall be deemed out of compliance with an effluent limitation if the concentration of the priority pollutant in the monitoring sample is greater than the effluent limitation.

1. Compliance determination shall be based on the reporting level selected from minimum level (ML)[22] specified in Attachment H of this Order, unless an alternative reporting level is approved by the Regional Water Board's Executive Officer. When there is more than one ML value for a given substance, the Discharger shall select the ML value that is below the calculated effluent limitation, and use its associated analytical method, listed in Attachment H of this Order. If no ML value is below the effluent limitation, then the Regional Water Board will select as the reporting level the lowest ML value and its associated analytical method.

2. When determining compliance with an average monthly limit and more than one sample result is available in a month, the Discharger shall compute the arithmetic mean unless the data set contains one or more reported determinations of detected but not quantified (DNQ) or not detected (ND). In those cases, the Discharger shall compute the median in place of the arithmetic mean in accordance with the following procedure:

    a. The data set shall be ranked from low to high, reported ND determinations lowest, DNQ determinations next, followed by quantified values (if any). The order of the individual ND or DNQ determinations is unimportant.

    b. The median value of the data set shall be determined. If the data set has an odd number of data points, then the median is the middle value. If the data set has an even number of data points, then the median is the average of the two values around the middle unless one or both of the points are ND or DNQ, in which case the median value shall be the lower of the two data points where DNQ is lower than a value and ND is lower than DNQ. If a sample result, or the arithmetic mean or median of multiple sample results, is below the reporting level, and there is evidence that the priority pollutant is present in the effluent above an effluent limitation and the Discharger conducts a pollutant minimization program (PMP)[23] the Discharger shall not be deemed out of compliance.

**P. Non-Priority Pollutants.**

The discharge shall be considered to be in compliance with an effluent limitation that is less than or equal to the method detection limit (MDL) specified in 40 CFR 136 if the arithmetic mean of all test results for the monitoring period is less than the constituent effluent limitation. Analytical results that are less than the specified MDL shall be assigned a value of zero.

---

[22] *Minimum level is the concentration at which the entire analytical system must give a recognizable signal and acceptable point. The ML is the concentration in a sample that is equivalent to the concentration of the lowest calibration standard analyzed by a specific analytical procedure, assuming that all the method specified sample weights, volumes, and processing steps have been followed.*

[23] *The goal of the PMP shall be to reduce all potential sources of a priority pollutant(s) through pollutant minimization (control) strategies, including pollution prevention measures as appropriate, to maintain the effluent concentration at or below the water quality-based effluent limitation.*

**Q. Compliance Determination**

Compliance determinations shall be based on available analyses for the time interval associated with the effluent limitation. Where only one sample analysis is available in a specified time interval (e. g., monthly or weekly average), that sample shall serve to characterize the discharge for the entire interval. If quarterly sample results show noncompliance with the average monthly limit and that sample result is used for compliance determinations for each month of the quarter, then three separate violations of the average monthly limit shall be deemed to have occurred.

Compliance with a single effluent limitation which applies to a group of chemicals (e.g., PCBs), based on a single sample shall be determined by considering the concentrations of individual members of the group to be zero if the analytical response for the individual chemical falls below the method detection limit (MDL) for that chemical.

## ATTACHMENT A – DEFINITIONS

**Arithmetic Mean ($\mu$),** also called the average, is the sum of measured values divided by the number of samples. For ambient water concentrations, the arithmetic mean is calculated as follows:

Arithmetic mean = $\mu = \Sigma x / n$ where: $\Sigma x$ is the sum of the measured ambient water concentrations, and n is the number of samples.

**Average Monthly Effluent Limitation (AMEL):** the highest allowable average of daily discharges over a calendar month, calculated as the sum of all daily discharges measured during a calendar month divided by the number of daily discharges measured during that month.

**Average Weekly Effluent Limitation (AWEL):** the highest allowable average of daily discharges over a calendar week (Sunday through Saturday), calculated as the sum of all daily discharges measured during a calendar week divided by the number of daily discharges measured during that week.

**Best Management Practices** (BMPs) are methods, measures, or practices designed and selected to reduce or eliminate the discharge of pollutants to surface waters from point and nonpoint source discharges including storm water. BMPs include structural and non-structural controls, and operation and maintenance procedures, which can be applied before, during, and/or after pollution producing activities.

**Bioaccumulative** pollutants are those substances taken up by an organism from its surrounding medium through gill membranes, epithelial tissue, or from food and subsequently concentrated and retained in the body of the organism.

**Carcinogenic** pollutants are substances that are known to cause cancer in living organisms.

**Coefficient of Variation (CV)** is a measure of the data variability and is calculated as the estimated standard deviation divided by the arithmetic mean of the observed values.

**Criteria Continuous Concentration (CCC)** equals the highest concentration of a pollutant to which aquatic life can be exposed for an extended period of time (4 days) without deleterious effects.

**Criteria Maximum Concentration (CMC)** equals the highest concentration of a pollutant to which aquatic life can be exposed for a short period of time without deleterious effects.

**Daily Discharge:** Daily Discharge is defined as either: (1) the total mass of the constituent discharged over the calendar day (12:00 am through 11:59 pm) or any 24-hour period that reasonably represents a calendar day for purposes of sampling (as specified in the permit), for a constituent with limitations expressed in units of mass or; (2) the unweighted arithmetic mean measurement of the constituent over the day for a constituent with limitations expressed in other units of measurement (e.g., concentration).

The daily discharge may be determined by the analytical results of a composite sample taken over the course of one day (a calendar day or other 24-hour period defined as a day) or by the arithmetic mean of analytical results from one or more grab samples taken over the course of the day.

For composite sampling, if 1 day is defined as a 24-hour period other than a calendar day, the analytical result for the 24-hour period will be considered as the result for the calendar day in which the 24-hour period ends.

**Detected, but Not Quantified (DNQ)** are those sample results less than the RL, but greater than or equal to the laboratory's MDL.

**Effluent Concentration Allowance (ECA)** is a value derived from the water quality criterion/objective, dilution credit, and ambient background concentration that is used, in conjunction with the coefficient of variation for the effluent monitoring data, to calculate a long-term average (LTA) discharge concentration. The ECA has the same meaning as waste load allocation (WLA) as used in USEPA guidance (Technical Support Document For Water Quality-based Toxics Control, March 1991, second printing, EPA/505/2-90-001).

**Estimated Chemical Concentration** is the estimated chemical concentration that results from the confirmed detection of the substance by the analytical method below the ML value.

**Existing Discharger** means any discharger that is not a new discharger. An existing discharger includes an "increasing discharger" (i.e., an existing facility with treatment systems in place for its current discharge that is or will be expanding, upgrading, or modifying its existing permitted discharge after the effective date of the State Implementation Policy).

**Infeasible** means not capable of being accomplished in a successful manner within a reasonable period of time, taking into account economic, environmental, legal, social, and technological factors.

**Inland Surface Waters** are all surface waters of the State that do not include the ocean, enclosed bays, or estuaries.

**Instantaneous Maximum Effluent Limitation:** the highest allowable value for any single grab sample or aliquot (i.e., each grab sample or aliquot is independently compared to the instantaneous maximum limitation).

**Instantaneous Minimum Effluent Limitation:** the lowest allowable value for any single grab sample or aliquot (i.e., each grab sample or aliquot is independently compared to the instantaneous minimum limitation).

**Load Allocation (LA)** is the portion of receiving water's total maximum daily load that is allocated to one of its non-point sources of pollution or to natural background sources.

**Maximum Daily Effluent Limitation (MDEL)** means the highest allowable daily discharge of a pollutant, over a calendar day (or 24-hour period). For pollutants with limitations expressed in units of mass, the daily discharge is calculated as the total mass of the pollutant discharged over the day. For pollutants with limitations expressed in other units of measurement, the daily discharge is calculated as the arithmetic mean measurement of the pollutant over the day.

**Maximum Daily Flow** is the maximum flow sample of all samples collected in a calendar day.

**MEC**: Maximum Effluent Concentration is the observed maximum pollutant concentration for the effluent.

**Median** is the middle measurement in a set of data. The median of a set of data is found by first arranging the measurements in order of magnitude (either increasing or decreasing order). If the number of measurements ($n$) is odd, then the median = $X_{(n+1)/2}$. If $n$ is even, then the median = $(X_{n/2} + X_{(n/2)+1})/2$ (i.e., the midpoint between the $n/2$ and $n/2+1$).

**Method Detection Limit (MDL)** is the minimum concentration of a substance that can be measured and reported with 99 percent confidence that the analyte concentration is greater than zero, as defined in title 40 of the Code of Federal Regulations, Part 136, Attachment B, revised as of July 3, 1999.

**Minimum Level (ML)** is the concentration at which the entire analytical system must give a recognizable signal and acceptable calibration point. The ML is the concentration in a sample that is equivalent to the concentration of the lowest calibration standard analyzed by a specific analytical procedure, assuming that all the method specified sample weights, volumes, and processing steps have been followed.

**Mixing Zone** is a limited volume of receiving water that is allocated for mixing with a wastewater discharge where water quality criteria can be exceeded without causing adverse effects to the overall water body.

**Not Detected (ND)** are those sample results less than the laboratory's MDL.

**Objectionable Bottom Deposits** are an accumulation of materials or substances on or near the bottom of a water body, which creates conditions that adversely impact aquatic life, human health, beneficial uses, or aesthetics. These conditions include, but are not limited to, the accumulation of pollutants in the sediments and other conditions that result in harm to benthic organisms, production of food chain organisms, or fish egg development. The presence of such deposits shall be determined by RWQCB(s) on a case-by-case basis.

**Persistent pollutants** are substances for which degradation or decomposition in the environment is nonexistent or very slow.

**Pollutant Minimization Program (PMP)** means waste minimization and pollution prevention actions that include, but are not limited to, product substitution, waste stream recycling, alternative waste management methods, and education of the public and businesses. The goal of the PMP

shall be to reduce all potential sources of a priority pollutant(s) through pollutant minimization (control) strategies, including pollution prevention measures as appropriate, to maintain the effluent concentration at or below the water quality-based effluent limitation. Pollution prevention measures may be particularly appropriate for persistent bioaccumulative priority pollutants where there is evidence that beneficial uses are being impacted. The Regional Water Board may consider cost effectiveness when establishing the requirements of a PMP. The completion and implementation of a Pollution Prevention Plan, if required pursuant to Water Code section 13263.3(d), shall be considered to fulfill the PMP requirements.

**Pollution Prevention** means any action that causes a net reduction in the use or generation of a hazardous substance or other pollutant that is discharged into water and includes, but is not limited to, input change, operational improvement, production process change, and product reformulation (as defined in Water Code section 13263.3). Pollution prevention does not include actions that merely shift a pollutant in wastewater from one environmental medium to another environmental medium, unless clear environmental benefits of such an approach are identified to the satisfaction of the State or Regional Water Board.

**Reporting Level (RL)** is the ML (and its associated analytical method) chosen by the Discharger for reporting and compliance determination from the MLs included in this Order. The MLs included in this Order correspond to approved analytical methods for reporting a sample result that are selected by the Regional Water Board either from Appendix 4 of the SIP[1] in accordance with section 2.4.2 of the SIP or established in accordance with section 2.4.3 of the SIP. The ML is based on the proper application of method-based analytical procedures for sample preparation and the absence of any matrix interferences. Other factors may be applied to the ML depending on the specific sample preparation steps employed. For example, the treatment typically applied in cases where there are matrix-effects is to dilute the sample or sample aliquot by a factor of ten. In such cases, this additional factor must be applied to the ML in the computation of the RL.

**Satellite Collection System** is the portion, if any, of a sanitary sewer system owned or operated by a different public agency than the agency that owns and operates the wastewater treatment facility that a sanitary sewer system is tributary to.

**Source of Drinking Water** is any water designated as municipal or domestic supply (MUN) in a Regional Water Board Basin Plan.

[1] *SIP refers to the Policy for Implementation of Toxics Standards for Inland Surface Waters, Enclosed Bays, and Estuaries of California.*

**Standard Deviation ($\sigma$)** is a measure of variability that is calculated as follows:

$$\sigma = (\sum[(x - \mu)^2]/(n - 1))^{0.5}$$

where:

$x$ is the observed value;
$\mu$ is the arithmetic mean of the observed values; and
$n$ is the number of samples.

**Toxicity Reduction Evaluation (TRE)** is a study conducted in a step-wise process designed to identify the causative agents of effluent or ambient toxicity, isolate the sources of toxicity, evaluate the effectiveness of toxicity control options, and then confirm the reduction in toxicity. The first steps of the TRE consist of the collection of data relevant to the toxicity, including additional toxicity testing, and an evaluation of facility operations and maintenance practices, and best management practices. A Toxicity Identification Evaluation (TIE) may be required as part of the TRE, if appropriate. (A TIE is a set of procedures to identify the specific chemical(s) responsible for toxicity. These procedures are performed in three phases (characterization, identification, and confirmation) using aquatic organism toxicity tests.)

**Water Effect Ratio (WER)** is an appropriate measure of the toxicity of a material obtained in a site water divided by the same measure of the toxicity of the same material obtained simultaneously in a laboratory dilution water.

**12-Month Running Average Effluent Limitation (12-MRAEL):** the highest allowable average of monthly discharges over last twelve months, calculated as the sum of all monthly discharges measured during last twelve months divided by the number of monthly discharges measured during that time period.

## ATTACHMENT B – LOCATION

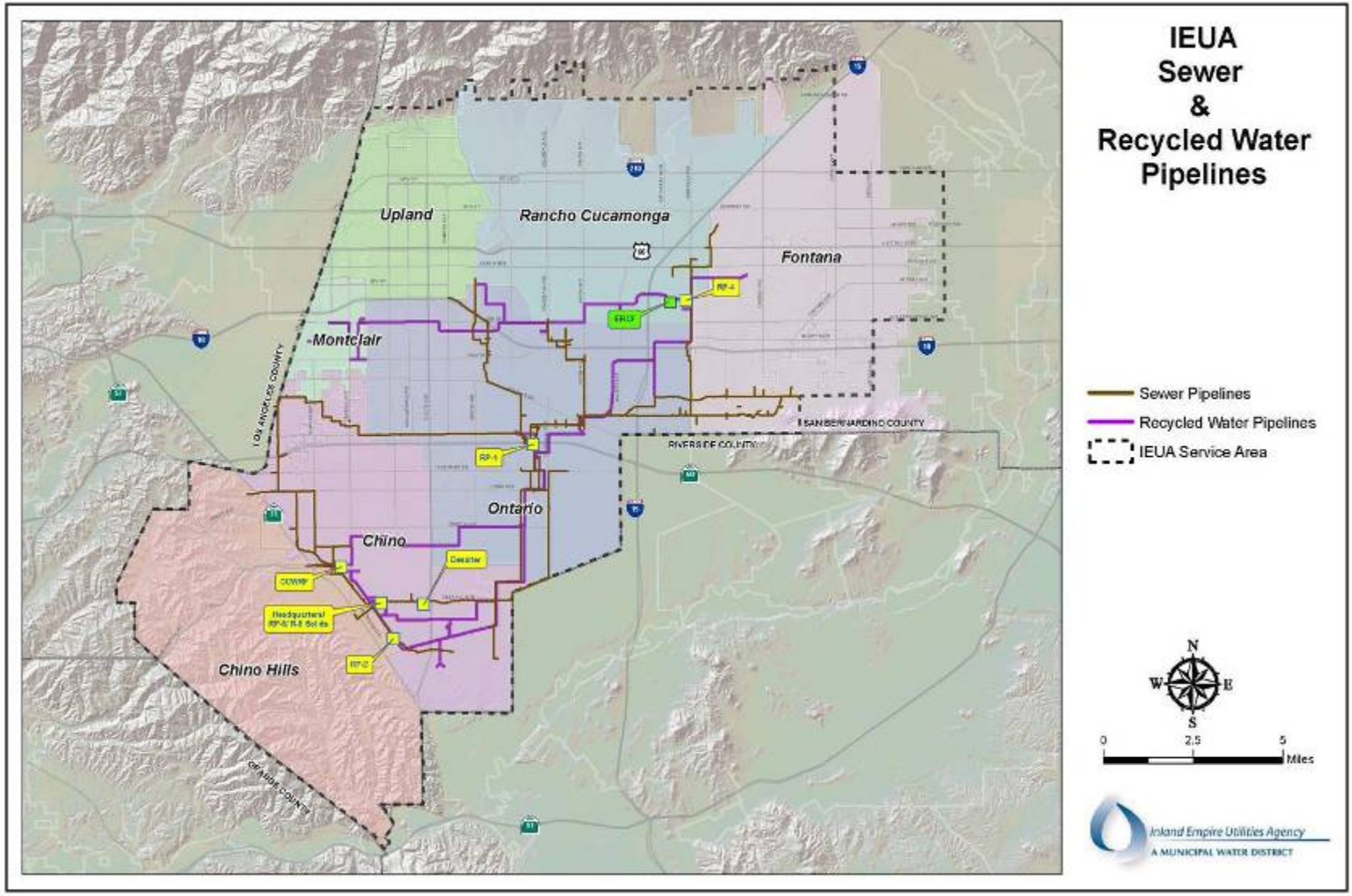

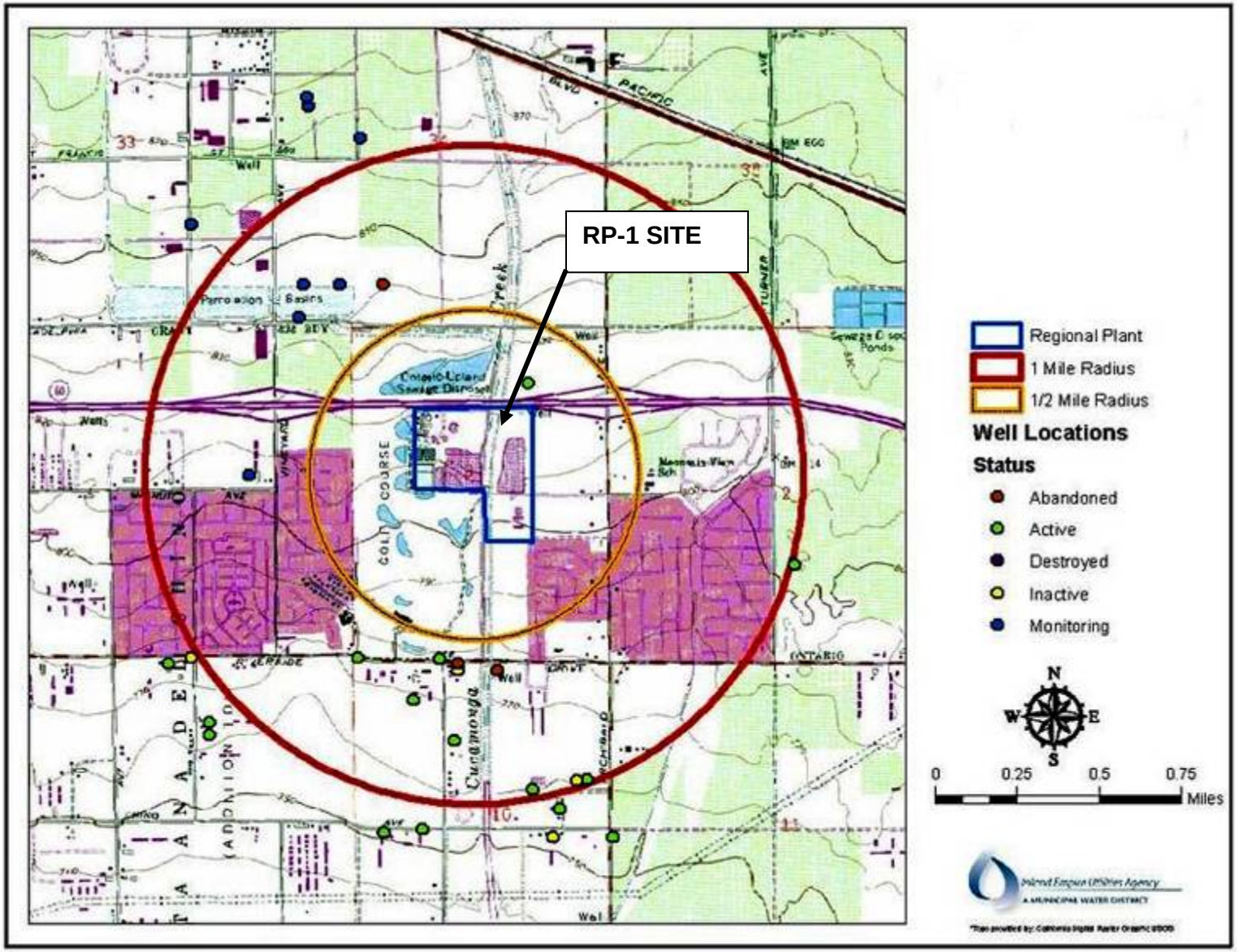


**RP-1 LOCATION MAP**

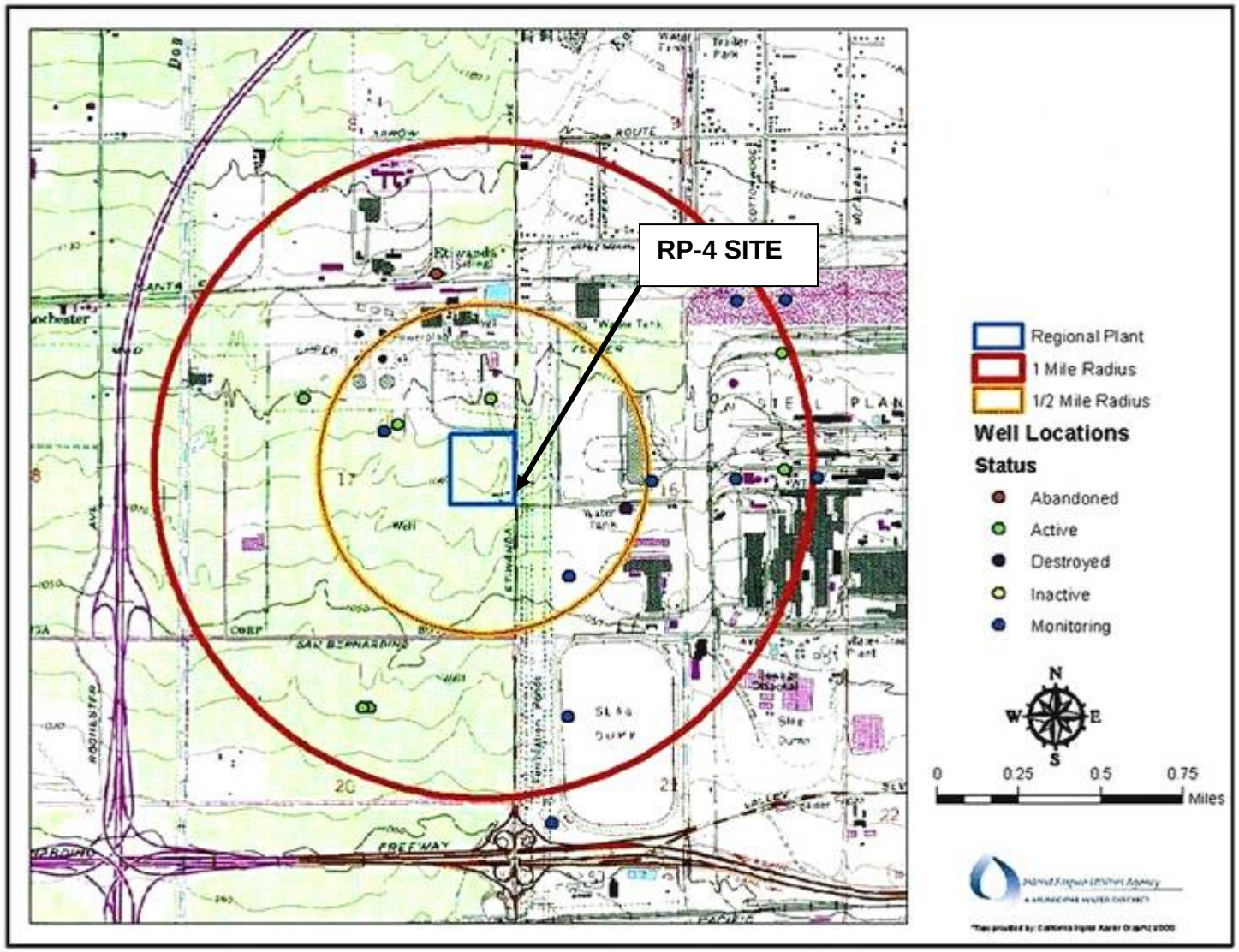


**RP-4 LOCATION MAP**

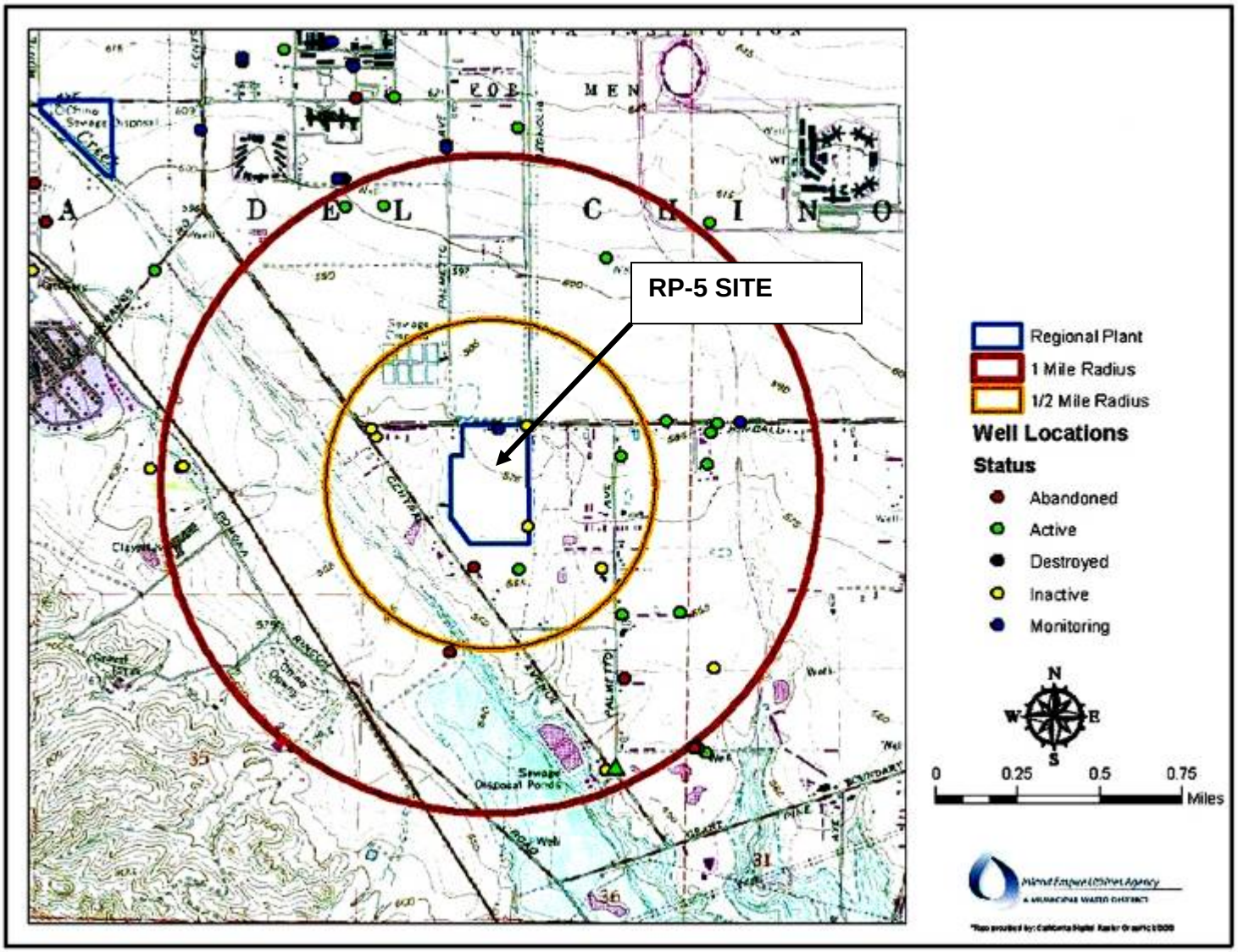


**RP-5 LOCATION MAP**

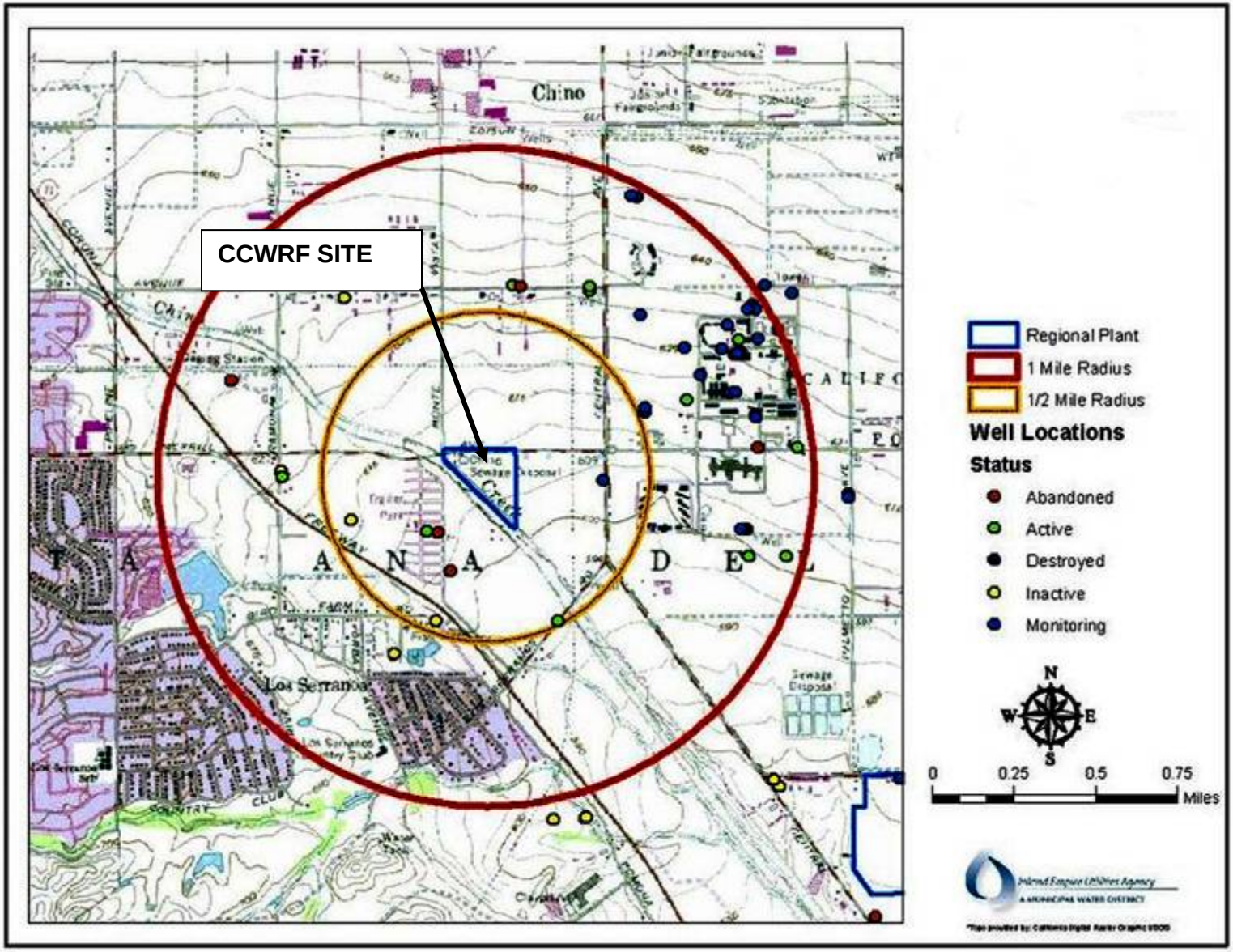


**CCWRF LOCATION MAP**

**ATTACHMENT C – FIGURE 1**

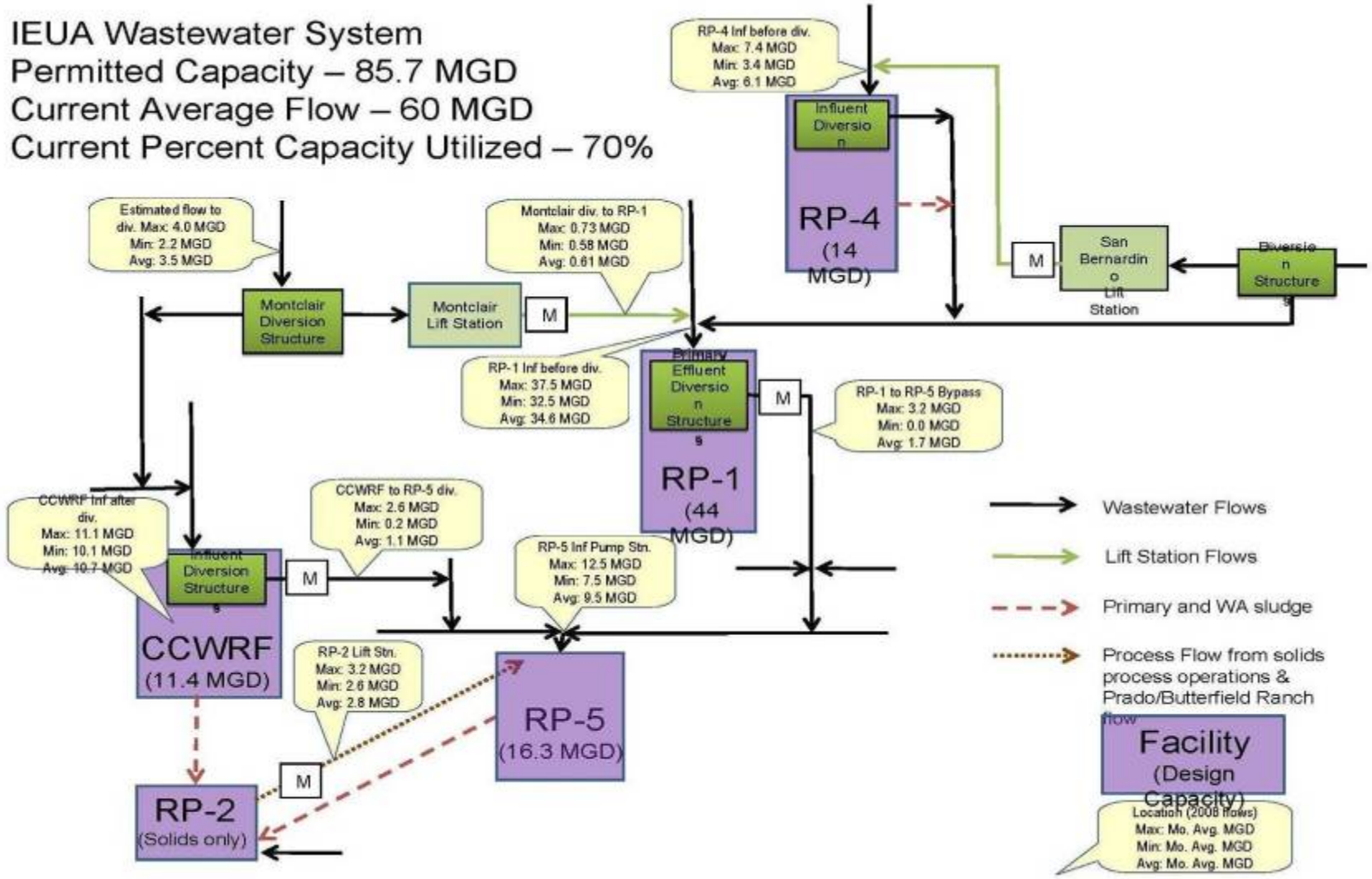

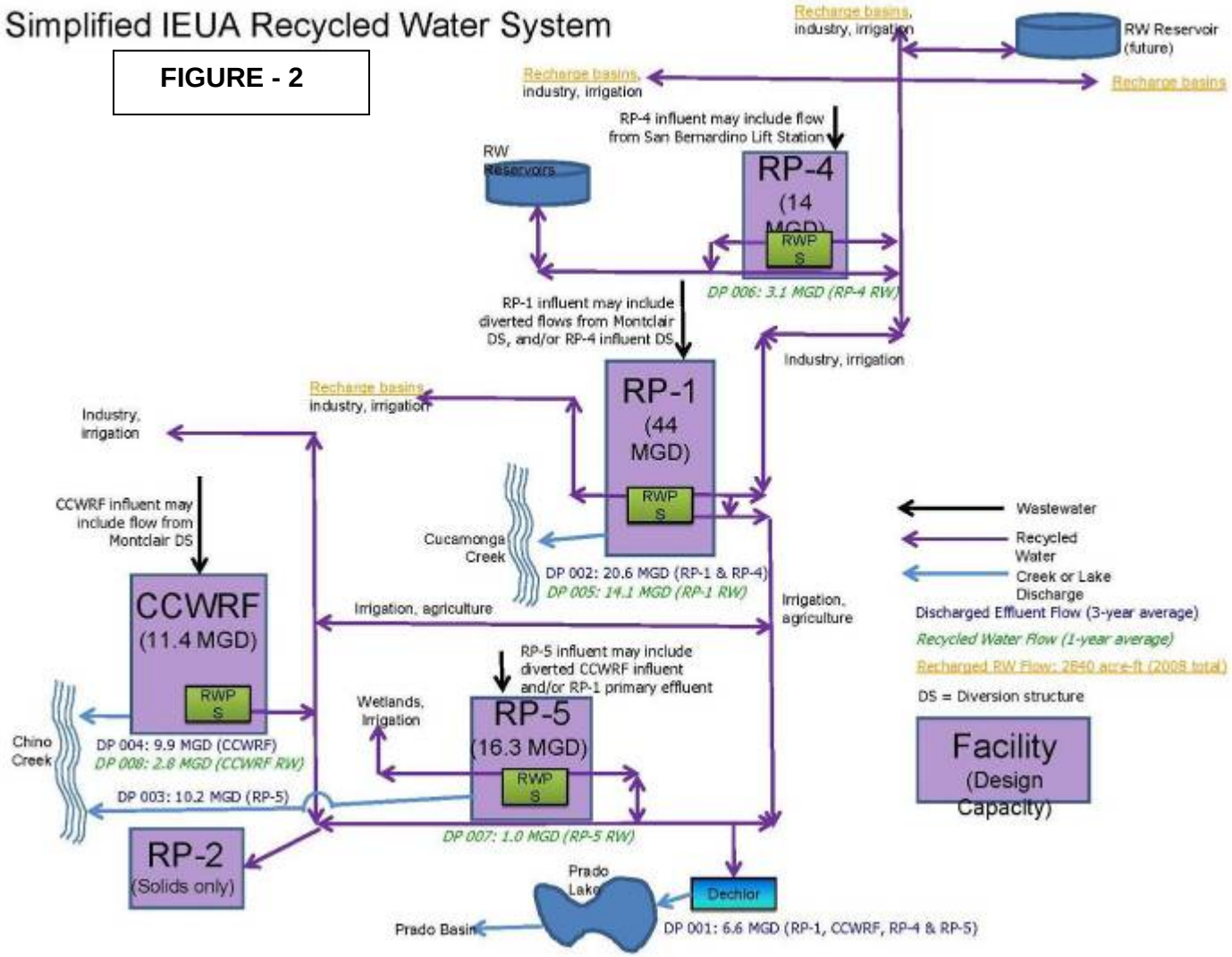
Simplified IEUA Recycled Water System
FIGURE - 2
Recharge basins, industry, irrigation
RW Reservoir (future)
Recharge basins, industry, irrigation
Recharge basins
RP-4 influent may include flow from San Bernardino Lift Station
RW Reservoirs
RP-4 (14 MGD)
RWP S
DP 006: 3.1 MGD (RP-4 RW)
RP-1 influent may include diverted flows from Montclair DS, and/or RP-4 influent DS
Industry, irrigation
Recharge basins, industry, irrigation
Industry, irrigation
RP-1 (44 MGD)
RWP S
CCWRF influent may include flow from Montclair DS
Cucamonga Creek
DP 002: 20.6 MGD (RP-1 & RP-4)
DP 005: 14.1 MGD (RP-1 RW)
CCWRF (11.4 MGD)
RWP S
Irrigation, agriculture
Irrigation, agriculture
RP-5 influent may include diverted CCWRF influent and/or RP-1 primary effluent
Wetlands, irrigation
RP-5 (16.3 MGD)
RWP S
Chino Creek
DP 004: 9.9 MGD (CCWRF)
DP 008: 2.8 MGD (CCWRF RW)
DP 003: 10.2 MGD (RP-5)
DP 007: 1.0 MGD (RP-5 RW)
RP-2 (Solids only)
Prado Lake
Dechlor
Prado Basin
DP 001: 6.6 MGD (RP-1, CCWRF, RP-4 & RP-5)
Wastewater
Recycled Water
Creek or Lake Discharge
Discharged Effluent Flow (3-year average)
Recycled Water Flow (1-year average)
Recharged RW Flow: 2840 acre-ft (2008 total)
DS = Diversion structure
Facility (Design Capacity)

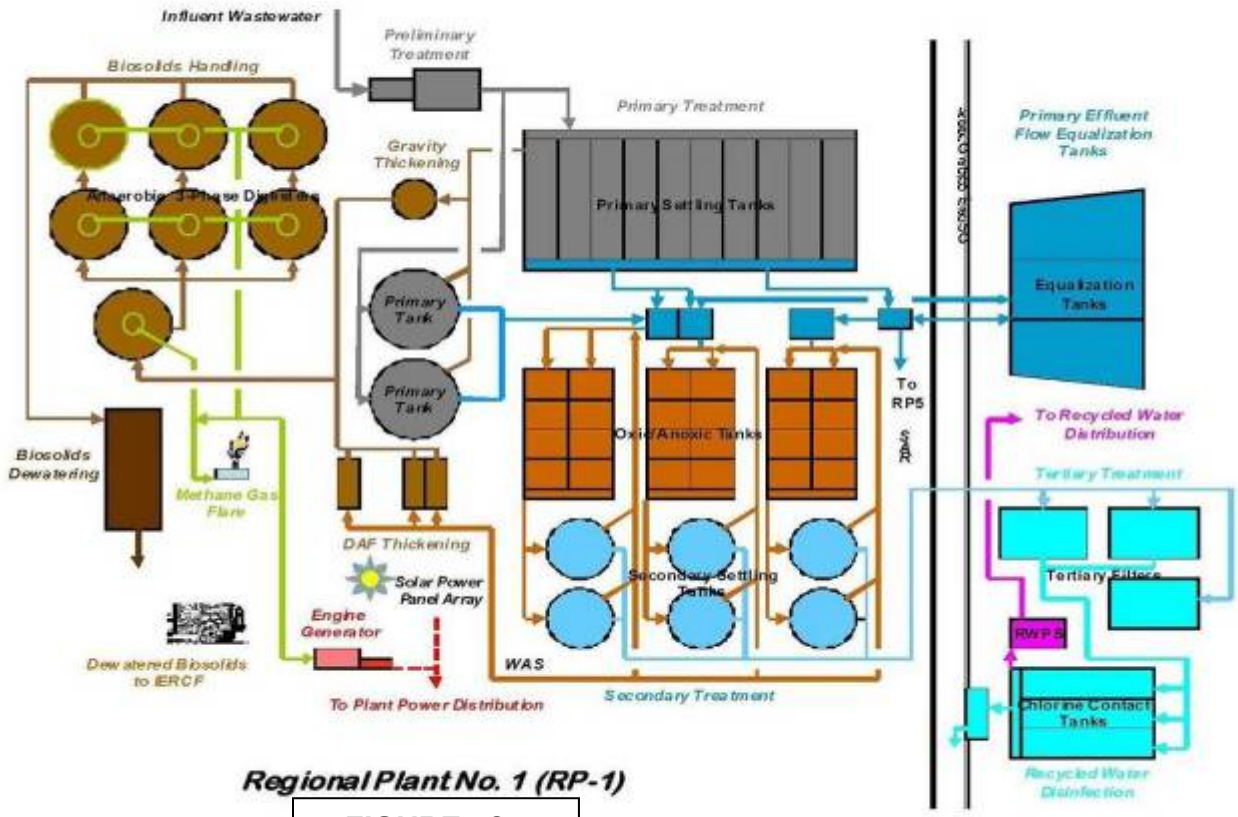


**Regional Plant No. 1 (RP-1)**

**FIGURE - 3**

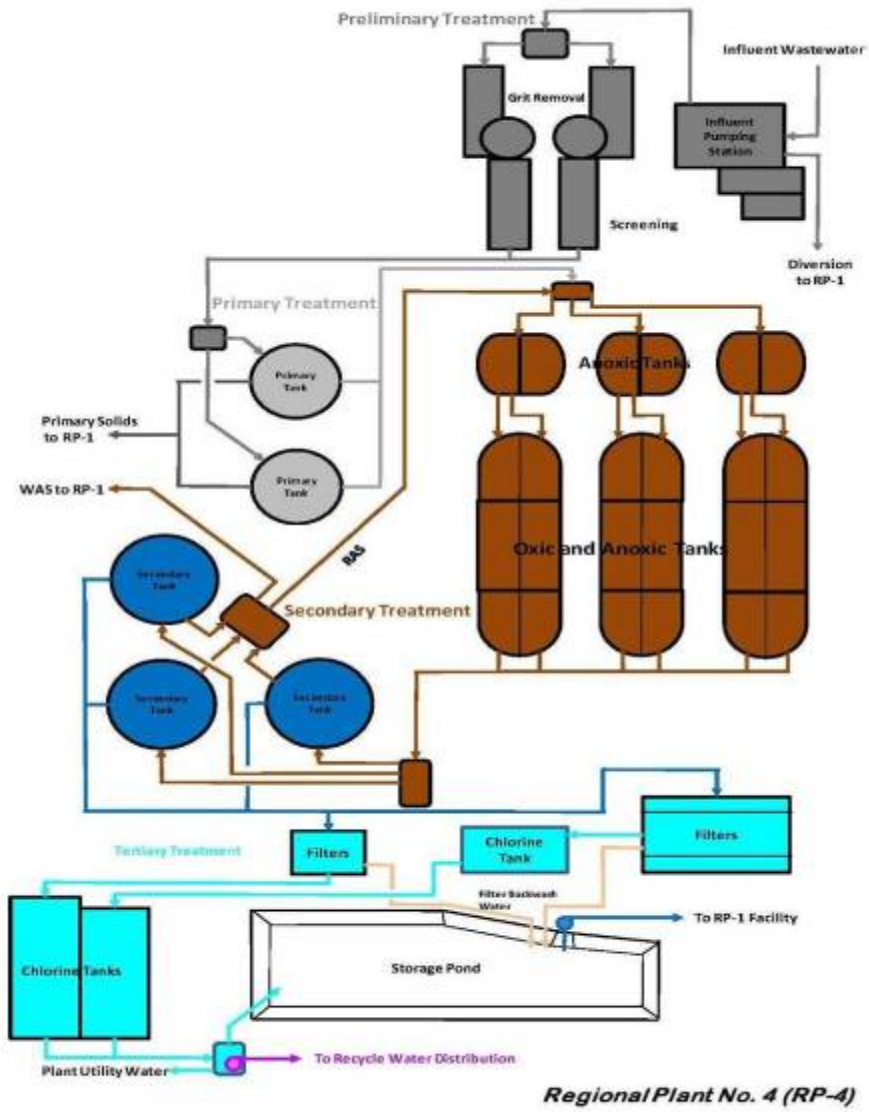
Preliminary Treatment
Influent Wastewater
Grit Removal
Influent Pumping Station
Screening
Diversion to RP-1
Primary Treatment
Primary Tank
Primary Tank
Primary Solids to RP-1
WAS to RP-1
Anoxic Tanks
Oxic and Anoxic Tanks
RAS
Secondary Treatment
Secondary Tank
Secondary Tank
Secondary Tank
Tertiary Treatment
Filters
Chlorine Tank
Filters
Filter Backwash Water
To RP-1 Facility
Chlorine Tanks
Storage Pond
Plant Utility Water
To Recycle Water Distribution
Regional Plant No. 4 (RP-4)

**FIGURE - 4**

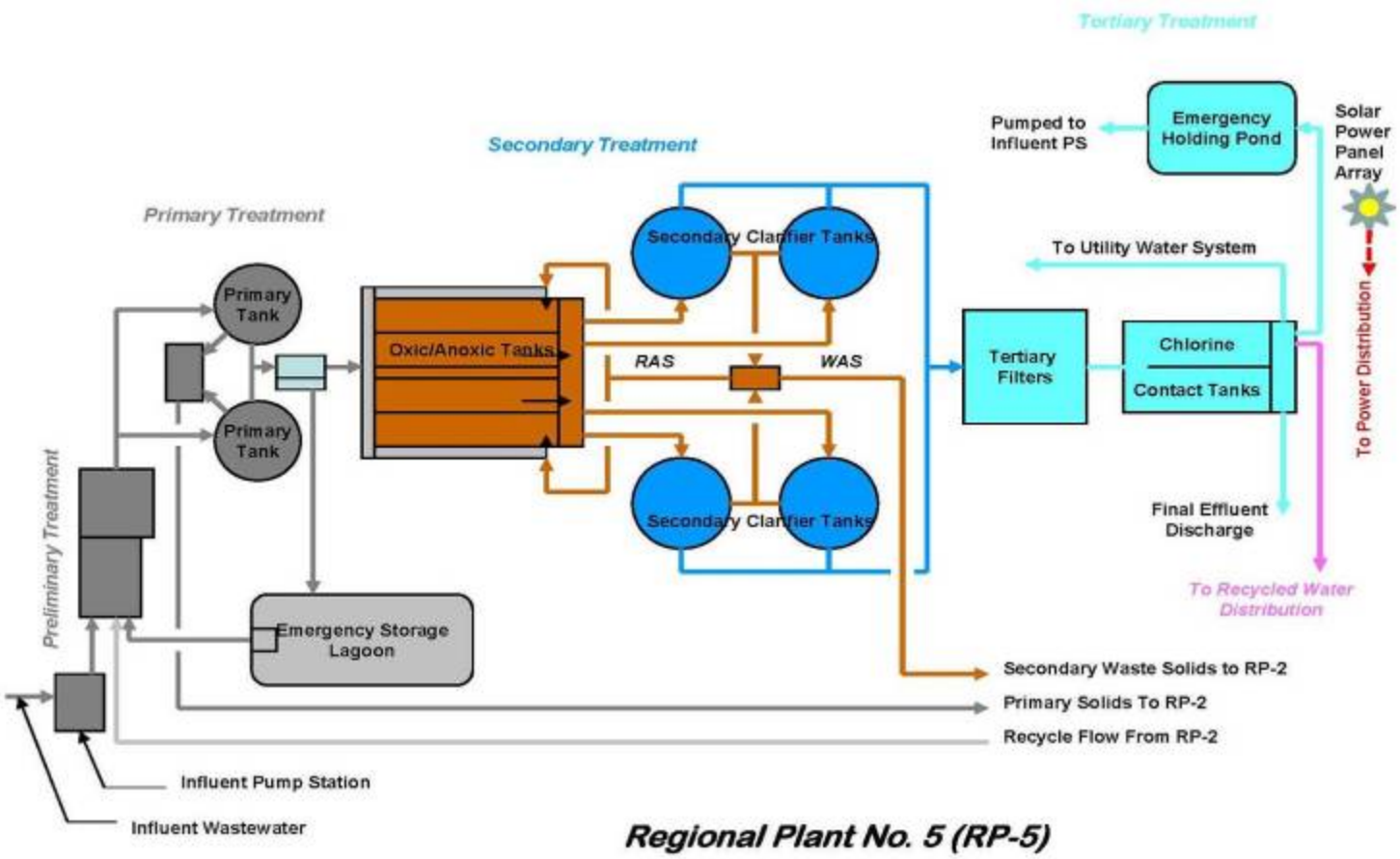


***Regional Plant No. 5 (RP-5)***

**FIGURE - 5**

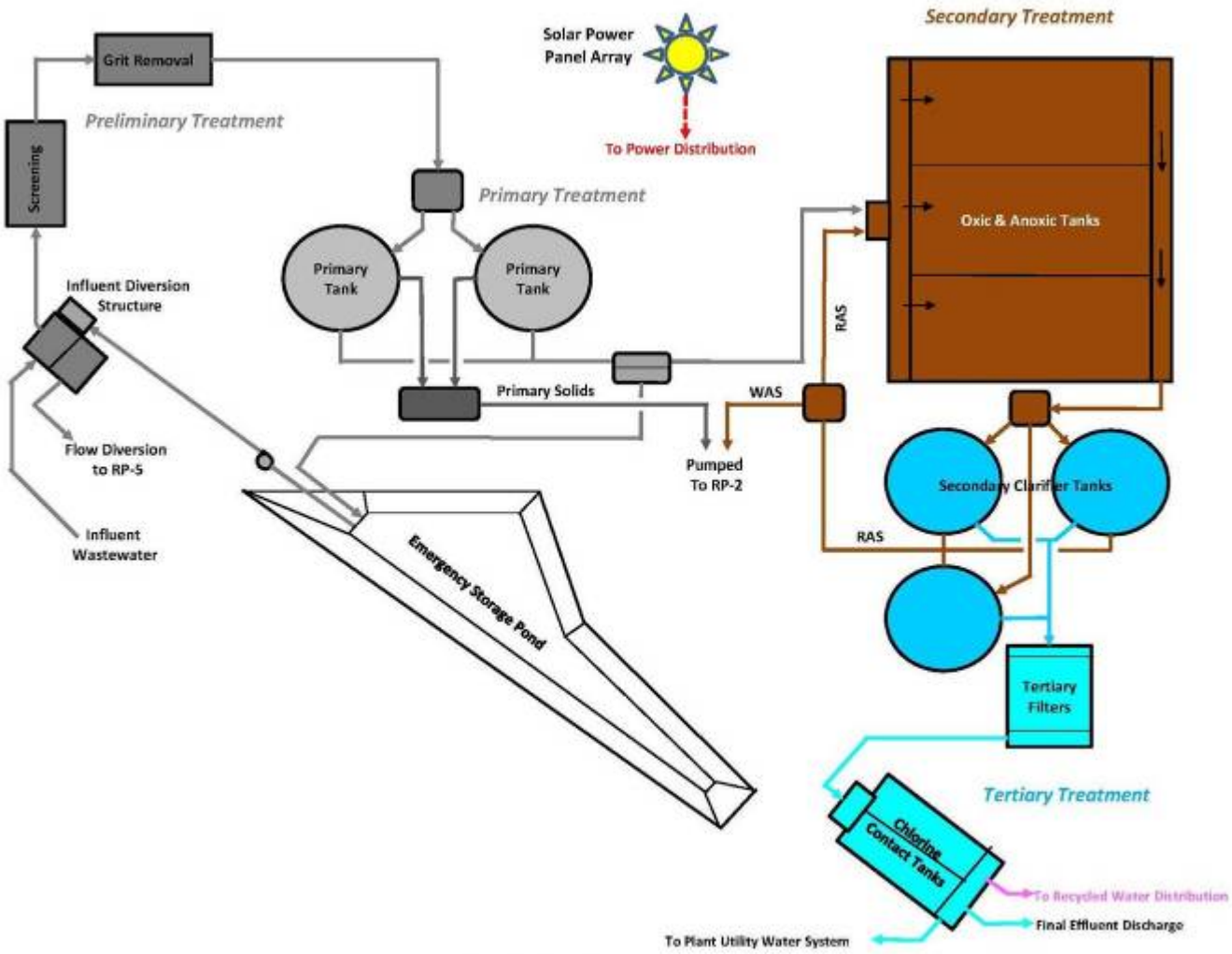


***Carbon Canyon Water Recycle Facility ( CCWRF)***

**FIGURE - 6**

# ATTACHMENT D –STANDARD PROVISIONS

## I. STANDARD PROVISIONS – PERMIT COMPLIANCE

### A. Duty to Comply

1. The Discharger must comply with all of the conditions of this Order. Any noncompliance constitutes a violation of the Clean Water Act (CWA) and the California Water Code and is grounds for enforcement action, for permit termination, revocation and reissuance, or modification; or denial of a permit renewal application. (40 C.F.R. § 122.41(a).)

2. The Discharger shall comply with effluent standards or prohibitions established under Section 307(a) of the CWA for toxic pollutants and with standards for sewage sludge use or disposal established under Section 405(d) of the CWA within the time provided in the regulations that establish these standards or prohibitions, even if this Order has not yet been modified to incorporate the requirement. (40 C.F.R. § 122.41(a)(1).)

### B. Need to Halt or Reduce Activity Not a Defense

It shall not be a defense for a Discharger in an enforcement action that it would have been necessary to halt or reduce the permitted activity in order to maintain compliance with the conditions of this Order. (40 C.F.R. § 122.41(c).)

### C. Duty to Mitigate

The Discharger shall take all reasonable steps to minimize or prevent any discharge or sludge use or disposal in violation of this Order that has a reasonable likelihood of adversely affecting human health or the environment. (40 C.F.R. § 122.41(d).)

### D. Proper Operation and Maintenance

The Discharger shall at all times properly operate and maintain all facilities and systems of treatment and control (and related appurtenances) which are installed or used by the Discharger to achieve compliance with the conditions of this Order. Proper operation and maintenance also includes adequate laboratory controls and appropriate quality assurance procedures. This provision requires the operation of backup or auxiliary facilities or similar systems that are installed by a Discharger only when necessary to achieve compliance with the conditions of this Order. (40 C.F.R. § 122.41(e).)

### E. Property Rights

1. This Order does not convey any property rights of any sort or any exclusive privileges. (40 C.F.R. § 122.41(g).)

2. The issuance of this Order does not authorize any injury to persons or property or invasion of other private rights, or any infringement of state or local law or regulations. (40 C.F.R. § 122.5(c).)

## F. Inspection and Entry

The Discharger shall allow the Regional Water Board, State Water Board, United States Environmental Protection Agency (USEPA), and/or their authorized representatives (including an authorized contractor acting as their representative), upon the presentation of credentials and other documents, as may be required by law, to (40 C.F.R. § 122.41(i); Wat. Code, § 13383):

1. Enter upon the Discharger's premises where a regulated facility or activity is located or conducted, or where records are kept under the conditions of this Order (40 C.F.R. § 122.41(i)(1));

2. Have access to and copy, at reasonable times, any records that must be kept under the conditions of this Order (40 C.F.R. § 122.41(i)(2));

3. Inspect and photograph, at reasonable times, any facilities, equipment (including monitoring and control equipment), practices, or operations regulated or required under this Order (40 C.F.R. § 122.41(i)(3)); and

4. Sample or monitor, at reasonable times, for the purposes of assuring Order compliance or as otherwise authorized by the CWA or the Water Code, any substances or parameters at any location. (40 C.F.R. § 122.41(i)(4).)

## G. Bypass

1. Definitions

   a. “Bypass” means the intentional diversion of waste streams from any portion of a treatment facility. (40 C.F.R. § 122.41(m)(1)(i).)

   b. “Severe property damage” means substantial physical damage to property, damage to the treatment facilities, which causes them to become inoperable, or substantial and permanent loss of natural resources that can reasonably be expected to occur in the absence of a bypass. Severe property damage does not mean economic loss caused by delays in production. (40 C.F.R. § 122.41(m)(1)(ii).)

2. Bypass not exceeding limitations. The Discharger may allow any bypass to occur which does not cause exceedances of effluent limitations, but only if it is for essential maintenance to assure efficient operation. These bypasses are not subject to the provisions listed in Standard Provisions – Permit Compliance I.G.3, I.G.4, and I.G.5 below. (40 C.F.R. § 122.41(m)(2).)

3. Prohibition of bypass. Bypass is prohibited, and the Regional Water Board may take enforcement action against a Discharger for bypass, unless (40 C.F.R. § 122.41(m)(4)(i)):

    a. Bypass was unavoidable to prevent loss of life, personal injury, or severe property damage (40 C.F.R. § 122.41(m)(4)(i)(A));

    b. There were no feasible alternatives to the bypass, such as the use of auxiliary treatment facilities, retention of untreated wastes, or maintenance during normal periods of equipment downtime. This condition is not satisfied if adequate back-up equipment should have been installed in the exercise of reasonable engineering judgment to prevent a bypass that occurred during normal periods of equipment downtime or preventive maintenance (40 C.F.R. § 122.41(m)(4)(i)(B)); and

    c. The Discharger submitted notice to the Regional Water Board as required under Standard Provisions – Permit Compliance I.G.5 below. (40 C.F.R. § 122.41(m)(4)(i)(C).)

4. The Regional Water Board may approve an anticipated bypass, after considering its adverse effects, if the Regional Water Board determines that it will meet the three conditions listed in Standard Provisions – Permit Compliance I.G.3 above. (40 C.F.R. § 122.41(m)(4)(ii).)

5. Notice

    a. Anticipated bypass. If the Discharger knows in advance of the need for a bypass, it shall submit a notice, if possible at least 10 days before the date of the bypass. (40 C.F.R. § 122.41(m)(3)(i).)

    b. Unanticipated bypass. The Discharger shall submit notice of an unanticipated bypass as required in Standard Provisions - Reporting V.E below (24-hour notice). (40 C.F.R. § 122.41(m)(3)(ii).)

## H. Upset

Upset means an exceptional incident in which there is unintentional and temporary noncompliance with technology based permit effluent limitations because of factors beyond the reasonable control of the Discharger. An upset does not include noncompliance to the extent caused by operational error, improperly designed treatment facilities, inadequate treatment facilities, lack of preventive maintenance, or careless or improper operation. (40 C.F.R. § 122.41(n)(1).)

1. Effect of an upset. An upset constitutes an affirmative defense to an action brought for noncompliance with such technology based permit effluent limitations if the requirements of Standard Provisions – Permit Compliance I.H.2 below are met. No determination made during administrative review of claims that noncompliance was caused by upset, and before an action for noncompliance, is final administrative action subject to judicial review. (40 C.F.R. § 122.41(n)(2).).

2. Conditions necessary for a demonstration of upset. A Discharger who wishes to establish the affirmative defense of upset shall demonstrate, through properly signed, contemporaneous operating logs or other relevant evidence that (40 C.F.R. § 122.41(n)(3)):

   a. An upset occurred and that the Discharger can identify the cause(s) of the upset (40 C.F.R. § 122.41(n)(3)(i));

   b. The permitted facility was, at the time, being properly operated (40 C.F.R. § 122.41(n)(3)(ii));

   c. The Discharger submitted notice of the upset as required in Standard Provisions – Reporting V.E.2.b below (24-hour notice) (40 C.F.R. § 122.41(n)(3)(iii)); and

   d. The Discharger complied with any remedial measures required under Standard Provisions – Permit Compliance I.C above. (40 C.F.R. § 122.41(n)(3)(iv).)

3. Burden of proof. In any enforcement proceeding, the Discharger seeking to establish the occurrence of an upset has the burden of proof. (40 C.F.R. § 122.41(n)(4).)

## II. STANDARD PROVISIONS – PERMIT ACTION

### A. General

This Order may be modified, revoked and reissued, or terminated for cause. The filing of a request by the Discharger for modification, revocation and reissuance, or termination, or a notification of planned changes or anticipated noncompliance does not stay any Order condition. (40 C.F.R. § 122.41(f).)

### B. Duty to Reapply

If the Discharger wishes to continue an activity regulated by this Order after the expiration date of this Order, the Discharger must apply for and obtain a new permit. (40 C.F.R. § 122.41(b).)

### C. Transfers

This Order is not transferable to any person except after notice to the Regional Water Board. The Regional Water Board may require modification or revocation and reissuance of the Order to change the name of the Discharger and incorporate such other requirements as may be necessary under the CWA and the Water Code. (40 C.F.R. § 122.41(l)(3); § 122.61.)

## III. STANDARD PROVISIONS – MONITORING

**A.** Samples and measurements taken for the purpose of monitoring shall be representative of the monitored activity. (40 C.F.R. § 122.41(j)(1).)

**B.** Monitoring results must be conducted according to test procedures under Part 136 or, in the case of sludge use or disposal, approved under Part 136 unless otherwise specified in Part 503 unless other test procedures have been specified in this Order. (40 C.F.R. § 122.41(j)(4); § 122.44(i)(1)(iv).)

## IV. STANDARD PROVISIONS – RECORDS

**A.** Except for records of monitoring information required by this Order related to the Discharger's sewage sludge use and disposal activities, which shall be retained for a period of at least five years (or longer as required by Part 503), the Discharger shall retain records of all monitoring information, including all calibration and maintenance records and all original strip chart recordings for continuous monitoring instrumentation, copies of all reports required by this Order, and records of all data used to complete the application for this Order, for a period of at least three (3) years from the date of the sample, measurement, report or application. This period may be extended by request of the Regional Water Board Executive Officer at any time. (40 C.F.R. § 122.41(j)(2).)

**B. Records of monitoring information shall include:**

1. The date, exact place, and time of sampling or measurements (40 C.F.R. § 122.41(j)(3)(i));

2. The individual(s) who performed the sampling or measurements (40 C.F.R. § 122.41(j)(3)(ii));

3. The date(s) analyses were performed (40 C.F.R. § 122.41(j)(3)(iii));

4. The individual(s) who performed the analyses (40 C.F.R. § 122.41(j)(3)(iv));

5. The analytical techniques or methods used (40 C.F.R. § 122.41(j)(3)(v)); and

6. The results of such analyses. (40 C.F.R. § 122.41(j)(3)(vi).)

**C. Claims of confidentiality for the following information will be denied (40 C.F.R. § 122.7(b)):**

1. The name and address of any permit applicant or Discharger (40 C.F.R. § 122.7(b)(1)); and

2. Permit applications and attachments, permits and effluent data. (40 C.F.R. § 122.7(b)(2).)

## V. STANDARD PROVISIONS – REPORTING

### A. Duty to Provide Information

The Discharger shall furnish to the Regional Water Board, State Water Board, or USEPA within a reasonable time, any information which the Regional Water Board, State Water Board, or USEPA may request to determine whether cause exists for modifying, revoking and reissuing, or terminating this Order or to determine compliance with this Order. Upon request, the Discharger shall also furnish to the Regional Water Board, State Water Board, or USEPA copies of records required to be kept by this Order. (40 C.F.R. § 122.41(h); Wat. Code, § 13267.)

### B. Signatory and Certification Requirements

1. All applications, reports, or information submitted to the Regional Water Board, State Water Board, and/or USEPA shall be signed and certified in accordance with Standard Provisions – Reporting V.B.2, V.B.3, V.B.4, and V.B.5 below. (40 C.F.R. § 122.41(k).)

2. All permit applications shall be signed by either a principal executive officer or ranking elected official. For purposes of this provision, a principal executive officer of a federal agency includes: (i) the chief executive officer of the agency, or (ii) a senior executive officer having responsibility for the overall operations of a principal geographic unit of the agency (e.g., Regional Administrators of USEPA). (40 C.F.R. § 122.22(a)(3).).

3. All reports required by this Order and other information requested by the Regional Water Board, State Water Board, or USEPA shall be signed by a person described in Standard Provisions – Reporting V.B.2 above, or by a duly authorized representative of that person. A person is a duly authorized representative only if:

   a. The authorization is made in writing by a person described in Standard Provisions – Reporting V.B.2 above (40 C.F.R. § 122.22(b)(1));

b. The authorization specifies either an individual or a position having responsibility for the overall operation of the regulated facility or activity such as the position of plant manager, operator of a well or a well field, superintendent, position of equivalent responsibility, or an individual or position having overall responsibility for environmental matters for the company. (A duly authorized representative may thus be either a named individual or any individual occupying a named position.) (40 C.F.R. § 122.22(b)(2)); and

c. The written authorization is submitted to the Regional Water Board and State Water Board. (40 C.F.R. § 122.22(b)(3).)

4. If an authorization under Standard Provisions – Reporting V.B.3 above is no longer accurate because a different individual or position has responsibility for the overall operation of the facility, a new authorization satisfying the requirements of Standard Provisions – Reporting V.B.3 above must be submitted to the Regional Water Board and State Water Board prior to or together with any reports, information, or applications, to be signed by an authorized representative. (40 C.F.R. § 122.22(c).)

5. Any person signing a document under Standard Provisions – Reporting V.B.2 or V.B.3 above shall make the following certification:

   "I certify under penalty of law that this document and all attachments were prepared under my direction or supervision in accordance with a system designed to assure that qualified personnel properly gather and evaluate the information submitted. Based on my inquiry of the person or persons who manage the system or those persons directly responsible for gathering the information, the information submitted is, to the best of my knowledge and belief, true, accurate, and complete. I am aware that there are significant penalties for submitting false information, including the possibility of fine and imprisonment for knowing violations." (40 C.F.R. § 122.22(d).)

## C. Monitoring Reports

1. Monitoring results shall be reported at the intervals specified in the Monitoring and Reporting Program (Attachment E) in this Order. (40 C.F.R. § 122.22(l)(4).)

2. Monitoring results must be reported on a Discharge Monitoring Report (DMR) form or forms provided or specified by the Regional Water Board or State Water Board for reporting results of monitoring of sludge use or disposal practices. (40 C.F.R. § 122.41(l)(4)(i).)

3. If the Discharger monitors any pollutant more frequently than required by this Order using test procedures approved under Part 136 or, in the case of sludge use or disposal, approved under Part 136 unless otherwise specified in Part 503, or as specified in this Order, the results of this monitoring shall be included in the

calculation and reporting of the data submitted in the DMR or sludge reporting form specified by the Regional Water Board. (40 C.F.R. § 122.41(l)(4)(ii).)

4. Calculations for all limitations, which require averaging of measurements, shall utilize an arithmetic mean unless otherwise specified in this Order. (40 C.F.R. § 122.41(l)(4)(iii).)

## D. Compliance Schedules

Reports of compliance or noncompliance with, or any progress reports on, interim and final requirements contained in any compliance schedule of this Order, shall be submitted no later than 14 days following each schedule date. (40 C.F.R. § 122.41(l)(5).)

## E. Twenty-Four Hour Reporting

1. The Discharger shall report any noncompliance that may endanger health or the environment. Any information shall be provided orally within 24 hours from the time the Discharger becomes aware of the circumstances. A written submission shall also be provided within five (5) days of the time the Discharger becomes aware of the circumstances. The written submission shall contain a description of the noncompliance and its cause; the period of noncompliance, including exact dates and times, and if the noncompliance has not been corrected, the anticipated time it is expected to continue; and steps taken or planned to reduce, eliminate, and prevent reoccurrence of the noncompliance. (40 C.F.R. § 122.41(l)(6)(i).)

2. The following shall be included as information that must be reported within 24 hours under this paragraph (40 C.F.R. § 122.41(l)(6)(ii)):

   a. Any unanticipated bypass that exceeds any effluent limitation in this Order. (40 C.F.R. § 122.41(l)(6)(ii)(A).)

   b. Any upset that exceeds any effluent limitation in this Order. (40 C.F.R. § 122.41(l)(6)(ii)(B).)

3. The Regional Water Board may waive the above-required written report under this provision on a case-by-case basis if an oral report has been received within 24 hours. (40 C.F.R. § 122.41(l)(6)(iii).)

## F. Planned Changes

The Discharger shall give notice to the Regional Water Board as soon as possible of any planned physical alterations or additions to the permitted facility. Notice is required under this provision only when (40 C.F.R. § 122.41(l)(1)):

1. The alteration or addition to a permitted facility may meet one of the criteria for determining whether a facility is a new source in section 122.29(b) (40 C.F.R. § 122.41(l)(1)(i)); or

2. The alteration or addition could significantly change the nature or increase the quantity of pollutants discharged. This notification applies to pollutants that are not subject to effluent limitations in this Order. (40 C.F.R. § 122.41(l)(1)(ii).)

3. The alteration or addition results in a significant change in the Discharger's sludge use or disposal practices, and such alteration, addition, or change may justify the application of permit conditions that are different from or absent in the existing permit, including notification of additional use or disposal sites not reported during the permit application process or not reported pursuant to an approved land application plan. (40 C.F.R.§ 122.41(l)(1)(iii).)

### G. Anticipated Noncompliance

The Discharger shall give advance notice to the Regional Water Board or State Water Board of any planned changes in the permitted facility or activity that may result in noncompliance with General Order requirements. (40 C.F.R. § 122.41(l)(2).)

### H. Other Noncompliance

The Discharger shall report all instances of noncompliance not reported under Standard Provisions – Reporting V.C, V.D, and V.E above at the time monitoring reports are submitted. The reports shall contain the information listed in Standard Provision – Reporting V.E above. (40 C.F.R. § 122.41(l)(7).)

### I. Other Information

When the Discharger becomes aware that it failed to submit any relevant facts in a permit application, or submitted incorrect information in a permit application or in any report to the Regional Water Board, State Water Board, or USEPA, the Discharger shall promptly submit such facts or information. (40 C.F.R. § 122.41(l)(8).)

## VI. STANDARD PROVISIONS – ENFORCEMENT

**A.** The Regional Water Board is authorized to enforce the terms of this permit under several provisions of the Water Code, including, but not limited to, sections 13385, 13386, and 13387.

## VII. ADDITIONAL PROVISIONS – NOTIFICATION LEVELS

### A. Publicly-Owned Treatment Works (POTWs)

All POTWs shall provide adequate notice to the Regional Water Board of the following (40 C.F.R. § 122.42(b)):

1. Any new introduction of pollutants into the POTW from an indirect discharger that would be subject to sections 301 or 306 of the CWA if it were directly discharging those pollutants (40 C.F.R. § 122.42(b)(1)); and

2. Any substantial change in the volume or character of pollutants being introduced into that POTW by a source introducing pollutants into the POTW at the time of adoption of the Order. (40 C.F.R. § 122.42(b)(2).)

3. Adequate notice shall include information on the quality and quantity of effluent introduced into the POTW as well as any anticipated impact of the change on the quantity or quality of effluent to be discharged from the POTW. (40 C.F.R. § 122.42(b)(3).)

# ATTACHMENT E – MONITORING AND REPORTING PROGRAM

## Table of Contents

I. General Monitoring Provisions ..... E-3
II. Monitoring Locations ..... E-6
III. Influent Monitoring Requirements ..... E-7
  A. Monitoring Locations M-INFs 1A, 1B, 3A, 3B, 3C, 3D, and M-INF 4 ..... E-7
IV. Effluent Monitoring Requirements to Surface Water ..... E-9
  A. Effluent Monitoring Locations M-001 to M-004 ..... E-9
  B. Secondary Effluent Monitoring at M-002, M-003 and M-004 with 20:1 Dilution ..... E-12
V. Whole Effluent Toxicity Testing Requirements ..... E-13
  A. Toxicity Monitoring Requirements at M-001A, M-002A, M-003, and M-004 ..... E-13
VI. Land Discharge Monitoring Requirements – Not Applicable ..... E-15
VII. Reclamation Monitoring Requirements ..... E-16
  A. Monitoring Locations REC-001 to REC-004 ..... E-16
  B. Monitoring Users ..... E-16
VIII. Receiving Water Monitoring Requirements – Surface Water and Groundwater ..... E-17
  A. Flow Measurements at Monitoring Locations R-002U, R-003U, and R-004U During 20:1 Dilution. ..... E-17
  B. Monitoring Locations R-002U, R-003U, and R-004U ..... E-17
  C. Monitoring Locations R-002D & R-003D ..... E-17
  D. Regional Monitoring for Fish Flesh Testing: ..... E-18
  E. Monitoring Requirements for Groundwater – Not Applicable ..... E-18
IX. Other Monitoring Requirements ..... E-18
  A. Biosolids Monitoring ..... E-18
  B. Stormwater Monitoring ..... E-19
  C. Water Supply Monitoring ..... E-19
  D. Pretreatment Monitoring and Reporting ..... E-19
X. Reporting Requirements ..... E-22
  A. General Monitoring and Reporting Requirements ..... E-22
  B. Self Monitoring Reports (SMRs) ..... E-25
  C. Discharge Monitoring Reports (DMRs) ..... E-28
  D. Other Reports ..... E-29

## List of Tables

Table 1 Annual Sampling Schedule ..... E-5
Table 2 Monitoring Station Locations ..... E-6
Table 3 Influent Monitoring M-INFs 1A, 1B, 3A, 3B, 3C, 3D, and M-INF 4 ..... E-7
Table 4 Tertiary Effluent Monitoring at M-001B, M-002A, M-003, and M-004 ..... E-9
Table 5 Effluent Monitoring Requirements at M-001A ..... E-12
Table 6 Secondary Effluent Monitoring at M-002B to M-004 w/ 20:1 Dilution ..... E-13
Table 7 Reclamation Monitoring at REC-001 to REC-004 ..... E-16
Table 8 Receiving Water Monitoring at R-002U, R-003U, and R-004U ..... E-17
Table 9 Receiving Water Monitoring at R-002D & R-003D ..... E-18
Table 10 Biosolids Monitoring Requirements ..... E-19
Table 11 Reporting Requirements ..... E-24
Table 12 Monitoring Periods and Reporting Schedule ..... E-25
Table 13 Monitoring Reporting Submittal ..... E-28

# ATTACHMENT E – MONITORING AND REPORTING PROGRAM (MRP)

The Code of Federal Regulations section 122.48 requires that all NPDES permits specify monitoring and reporting requirements. Water Code Sections 13267 and 13383 also authorize the Regional Water Quality Control Board (Regional Water Board) to require technical and monitoring reports. This MRP establishes monitoring and reporting requirements, which implement the federal and California regulations.

## I. GENERAL MONITORING PROVISIONS

### A. General Monitoring Provision

1. All sampling and sample preservation shall be in accordance with the current edition of “Standard Methods for the Examination of Water and Wastewater” (American Public Health Association) or 40CFR136. (revised as of April 11, 2007) "Guidelines Establishing Test Procedures for the Analysis of Pollutants," promulgated by the United States Environmental Protection Agency (EPA).

2. All laboratory analyses shall be performed in accordance with test procedures under 40 CFR 136 (revised as of April 11, 2007) "Guidelines Establishing Test Procedures for the Analysis of Pollutants," promulgated by the United States Environmental Protection Agency (EPA), unless otherwise specified in this MRP. In addition, the Regional Water Board and/or EPA, at their discretion, may specify test methods that are more sensitive than those specified in 40 CFR 136.

3. Chemical, bacteriological, and bioassay analyses shall be conducted at a laboratory certified for such analyses by the California Department of Public Health in accordance with the provision of Water Code Section 13176, or conducted at a laboratory certified for such analyses by the EPA or at laboratories approved by the Regional Water Board's Executive Officer.

4. In conformance with federal regulations 40 CFR 122.45(c), analyses to determine compliance with the effluent limitations for metals shall be conducted using the total recoverable method. For Chromium (VI), the dissolved method in conformance with 40 CFR 136 may be used to measure compliance with the Chromium (VI) limitation.

5. The Discharger shall have, and implement an acceptable written quality assurance (QA) plan for laboratory analyses. Duplicate chemical analyses must be conducted on a minimum of ten percent (10%) of the samples, or at least one sample per month, whichever is greater. A similar frequency shall be maintained for analyzing spiked samples. When requested by the Regional Water Board or EPA, the Discharger will participate in the NPDES discharge monitoring report QA performance study.

6. For every item of monitoring data where the requirements are not met, the monitoring report shall include a statement discussing the reasons for noncompliance, the actions undertaken or proposed that will bring the discharge into full compliance with requirements at the earliest time, and an estimate of the date when the Discharger will be in compliance. The Discharger shall notify the Regional Water Board by letter when compliance with the time schedule has been achieved.

7. The Discharger shall assure that records of all monitoring information are maintained and accessible for a period of at least five years (this retention period supersedes the retention period specified in Section IV.A. of Attachment D) from the date of the sample, report, or application. This period of retention shall be extended during the course of any unresolved litigation regarding this discharge or by the request of the Regional Water Board at any time. Records of monitoring information shall include:

   a. The information listed in Attachment D- IV Standard Provisions – Records, subparagraph B. of this Order;
   b. The laboratory which performed the analyses;
   c. The date(s) analyses were performed;
   d. The individual(s) who performed the analyses;
   e. The modification(s) to analytical techniques or methods used;
   f. All sampling and analytical results, including
      (1) Units of measurement used;
      (2) Minimum reporting level for the analysis (minimum level);
      (3) Results less than the reporting level but above the method detection limit (MDL);
      (4) Data qualifiers and a description of the qualifiers;
      (5) Quality control test results (and a written copy of the laboratory quality assurance plan);
      (6) Dilution factors, if used; and
      (7) Sample matrix type.
   g. All monitoring equipment calibration and maintenance records;
   h. All original strip charts from continuous monitoring devices;
   i. All data used to complete the application for this Order; and,
   j. Copies of all reports required by this Order.
   k. Electronic data and information generated by the Supervisory Control And Data Acquisition (SCADA) System.

8. The flow measurement system shall be calibrated at least once per year or more frequently, to ensure continued accuracy.

9. Monitoring and reporting shall be in accordance with the following:

   a. Samples and measurements taken for the purpose of monitoring shall be representative of the monitored activity.

   b. The monitoring and reporting of influent, effluent, and sludge shall be done more frequently as necessary to maintain compliance with this Order and or as specified in this Order.

   c. Whenever the Discharger monitors any pollutant more frequently than is required by this Order, the results of this monitoring shall be included in the calculation and reporting of the data submitted in the discharge monitoring report specified by the Executive Officer.

   d. A "grab" sample is defined as any individual sample collected in less than 15 minutes.

   e. A composite sample is defined as a combination of no fewer than eight individual grab samples obtained over the specified sampling period. The volume of each individual grab sample shall be proportional to the discharge flow rate at the time of sampling. The compositing period shall equal the specific sampling period, or 24 hours, if no period is specified.

   f. Daily samples shall be collected on each day of the week.

   g. Monthly samples shall be collected on any representative day of each month.

   h. Quarterly samples shall be taken on any representative day of January, April, July, and October.

   i. Semi-annual samples shall be collected in January and July.

   j. Annual samples shall be collected in accordance with the following schedule:

**Table 1 Annual Sampling Schedule**

| Year | Annual Samples |
|---|---|
| 2010 | July |
| 2011 | October |
| 2012 | January |
| 2013 | April |
| 2014 | July |
| 2015 | October |

## II. MONITORING LOCATIONS

The Discharger shall establish the following monitoring locations to demonstrate compliance with the effluent limitations, discharge specifications, and other requirements in this Order:

**Table 2 Monitoring Station Locations**

| Discharge Point Name | Monitoring Location Name | Monitoring Location Description | Latitude and Longitude |
|---|---|---|---|
| 001/002 | M-INF 1A | RP-1 influent line, before Headworks | 34°01'48"N, 117°36'07"W |
| 001/002 | M-INF 1B | RP-4 influent line, before Headworks | 34°05'09"N, 117°31'28"W |
| 001 | M-001A | RP-1 effluent Outfall to Prado Park Lake | 33°56'39"N, 117°38'34"W |
| 001 | M-001B | At the RP-1splitter box | 34°01'29"N, 117°35'57"W |
| 002 | M-002A | RP-1 and RP-4 Effluent outfall to Reach 1 of Cucamonga Creek | 34°01'31"N, 117°35'56"W |
| 002 | M-002B | RP-1 at the end of CCB 3 (Chlorine Contact Basin) before outfall discharge to Reach 1 of Cucamonga Creek | 34°01'28"N, 117°35'57"W |
| 003 | M-INF 3A | RP-5 influent upstream of any in-plant return flows (theoretical point of combined M-INFB & M-INFD flows) | 33°58'04"N & 117°40'28"W |
| 003 | M-INF 3B | RP-5 Influent Pump Station | 33°57'38"N & 117°40'16"W |
| 003 | M-INF 3C | RP-2 Recycle Flow | 33°57'29"N & 117°40'23"W |
| 003 | M-INF 3D | RP-2 Lift Station | 33°57.08”N & 117°40’00”W |
| 003 | M-003 | RP-5 Effluent to Reach 2 of Chino Creek | 33°57’44”N & 117°40’41”W |
| 004 | M-INF 4 | Influent sampling at CCWRF | 33°58’56”N & 117°41’48”W |
| 004 | M-004 | CCWRF Effluent to Reach 2 of Chino Creek | 33°58’47”N & 117°41’39”W |
| 005 | REC-001 | RP-1 Effluent to recycled water use area, same as M-001B | 34°01'29"N, 117°35'57"W |
| 006 | REC-002 | RP-4 Effluent to recycled water use area | 34°04’59”N & 117°31’35”W |
| 007 | REC-003 | RP-5 Effluent to recycled water use area - Same as M-003 | 33°57’44”N & 117°40’41”W |
| 008 | REC-004 | CCWRF Effluent to recycled water use area – Same as M-004 | 33°58’47”N & 117°41’39”W |
| 002 | R-002U | Cucamonga Creek within 100 feet upstream of the DP 002 | 34°01'29"N, 117°35'58"W |
| 002 | R-002D | Cucamonga Creek within 500 feet downstream of DP 002 after blending | 34°00'43"N, 117°35'59"W |
| 003 | R-003U | Chino Creek within 100 feet upstream of DP 003 | 33º57’45”N & 117º40’41”W |
| 003 | R-003D | Chino Creek within 500 feet downstream of DP 003 in | 33º57’45”N & 117º40’41”W |
| 004 | R-004U | Chino Creek within 100 feet upstream of DP 004 | 33º58’47”N & 117º40’41”W |
| 004 | R-004D | Chino Creek within 500 feet downstream of DP 004 in | 33º58’46”N & 117º40’38”W |
| S-001 | STORM-001 | Storm water runoff from RP-1, west | 34°01'36"N, 117°35'59"W |

**Table 2 Monitoring Station Locations**

| Discharge Point Name | Monitoring Location Name | Monitoring Location Description | Latitude and Longitude |
|---|---|---|---|
| S-002 | STORM-002 | Storm water runoff from RP-1, east | 34°01'28"N, 117°35'58"W |

Note: RP-5 influent consists of RP-5 Influent Pump Station flows and RP-2 Lift Station flows, which include RP-2 Recycle Flow and Prado/Butterfield Ranch flows. Therefore, values reported for M-INF3A are flow-weighted values based on flows from RP-5 Pump Station and RP-2 Lift Station.

## III. INFLUENT MONITORING REQUIREMENTS

### A. Monitoring Locations M-INFs 1A, 1B, 3A, 3B, 3C, 3D, and M-INF 4

1. Sampling stations shall be established for the points of inflow to each treatment plant. The sampling stations shall be located upstream of any in-plant return flows and where representative samples of the influent of the treatment plant can be obtained.

2. The Discharger shall monitor the influent to the Facility at Monitoring Locations M-INFs 1A, 1B, 3A, 3B, 3C, 3D, and M-INF 4 as follows. If more than one analytical test method is listed for a given parameter, the Discharger must select from the listed methods and corresponding Minimum Level:

**Table 3 Influent Monitoring M-INFs 1A, 1B, 3A, 3B, 3C, 3D, and M-INF 4**

| Parameter | Units | Sample Type | Minimum Sampling Frequency | Required Analytical Test Method |
|---|---|---|---|---|
| Flow | mgd | Recorder/Totalizer | Continuous | -- |
| pH | pH Units | Recorder | Continuous | -- |
| Specific Conductance | µmhos/cm | Recorder | Continuous | -- |
| TOC | mg/L | Composite | Weekly | See Section I.A.2 & 3, above, of this MRP |
| $BOD_5$ [1] | mg/L | Composite | Weekly | " |
| Total Suspended Solids | mg/L | Composite | Weekly | " |
| Total Dissolved Solids | mg/L | Composite | Weekly | " |
| Ammonia-Nitrogen | mg/L | Grab | Weekly | " |
| Total Nitrogen | mg/L | Composite | Weekly | " |
| Total Inorganic Nitrogen | mg/L | Composite | Weekly | " |
| Cyanide (Free)[2] | µg/l | Grab | Monthly | " |

1 *$BOD_5$ is calculated based on a $BOD_5$/TOC correlation approved by the Regional Water Board.*

2 *Free cyanide is measured as aquatic free cyanide (ASTM Method D7237) without sodium hydroxide (NaOH) preservation.*

**Table 3 Influent Monitoring M-INFs 1A, 1B, 3A, 3B, 3C, 3D, and M-INF 4**

| Parameter | Units | Sample Type | Minimum Sampling Frequency | Required Analytical Test Method |
|---|---|---|---|---|
| Total Hardness | mg/L | Composite | Quarterly | " |
| Boron | mg/L | Composite | Quarterly | " |
| Chloride | mg/L | Composite | Quarterly | " |
| Fluoride | mg/L | Composite | Quarterly | " |
| Sodium | mg/L | Composite | Quarterly | " |
| Sulfate | mg/L | Composite | Quarterly | See Section I.A.3. above, of this MRP |
| Arsenic | µg/L | Composite | Quarterly | See Section I.A.2. above, of this MRP |
| Cadmium | µg/L | Composite | Quarterly | " |
| Total Chromium or Chromium VI | µg/L | Composite | Quarterly | See Section I.A.2. above, of this MRP |
| Total Recoverable Copper | µg/L | Composite | Quarterly | " |
| Total Recoverable Lead | µg/L | Composite | Quarterly | " |
| Total Recoverable Mercury | µg/L | Composite | Quarterly | " |
| Total Recoverable Nickel | µg/L | Composite | Quarterly | " |
| Selenium | µg/L | Composite | Quarterly | " |
| Total Recoverable Silver | µg/L | Composite | Quarterly | " |
| Total Recoverable Zinc | µg/L | Composite | Quarterly | " |
| Bis (2-ethylhexyl) phthalate | µg/L | Grab | Quarterly | See Sections I.A.2., I.A.3., above of this MRP |
| 2,3,7,8-TCDD (Dioxin)[3] | µg/L | Composite | Semi-Annually | See Section I.A.3. above, RL 1 pg/L |
| Volatile organic portion of EPA Priority Pollutants[4] (See Attachment G) | µg/L | Grab | Annually | See Section I.A.2. above, of this MRP |
| Remaining EPA Priority Pollutants[5] (See Attachment G) | µg/L | Composite | Annually | " |

[3] *Applies at M-INF 3A & 3B and M-INF 004 only.*

[4] *EPA priority pollutants are those remaining volatile organic pollutants listed in Attachment "G" which are not specifically listed in this monitoring program table.*

[5] *Remaining EPA priority pollutants are those pollutants listed in Attachment "G" which are not volatile organics and pollutants not specifically listed in this monitoring program table.*

## IV. EFFLUENT MONITORING REQUIREMENTS TO SURFACE WATER

The Discharger shall monitor tertiary effluent at monitoring locations M-001, M-002, M-003, and M-004 as follows. If more than one analytical test method is listed for a given parameter, the Discharger must select from the listed methods and corresponding Minimum Level.

### A. Effluent Monitoring Locations M-001 to M-004

1. The Discharger shall monitor tertiary treated effluent for DP 001, DP 002, DP 003, and DP 004 at Monitoring Locations M-001B, M-002A, M-003, and M-004 as follows.

**Table 4 Tertiary Effluent Monitoring at M-001B, M-002A, M-003, and M-004**

| Parameter | Units | Sample Type | Minimum Sampling Frequency | Required Analytical Test Method and Minimum Level, units, respectively |
|---|---|---|---|---|
| Flow | mgd | Recorder/ Totalizer | Continuous | -- |
| Specific Conductance[6] | µmhos/cm | Recorder | Continuous | -- |
| pH | pH units | Recorder | Continuous | -- |
| Turbidity[7] | NTU | Recorder | Continuous | -- |
| Total Chlorine Residual[8] | mg/L | Recorder | Continuous | -- |
| Coliform Organisms[9], [10] | MPN per 100 ml[11] | Grab | Daily | See Section I.A.3., above of this MRP |
| CT | mg-minutes/L | Recorder | Continuous[12] | -- |
| Total Organic Carbon (TOC) | mg/L | Composite | Daily | See Section I.A.3. above, of this MRP |
| $BOD_5$[13] | mg/L | Composite | Daily | See Section I.A.3. above, of |

[6] *Except M-001B.*

[7] *Turbidity analysis shall be continuous, performed by a continuous recording turbidimeter. Compliance with the daily average operating filter effluent turbidity shall be determined by averaging the levels of recorded turbidity taken at a minimum of four-hour intervals over a 24-hour period. The results of the daily average turbidity determinations shall be reported monthly.*

[8] *Except M-001B.*

[9] *Samples for total coliform bacteria shall be collected daily. Samples shall be taken from the disinfected effluent.*

[10] *M-001B is the coliform monitoring location for DP 001 & DP 002. Alternative monitoring at M-002B is available if gate is closed between Chlorine Contact Basin 2 and 3.*

[11] *MPN/100mL = Most Probable Number per 100 milliliters.*

[12] *The CT and modal contact time shall be continuously calculated and recorded. The minimum daily value shall be reported monthly. Modal contact time and CT shall be calculated based on the minimum one-hour average value in a 24-hr period.*

**Table 4 Tertiary Effluent Monitoring at M-001B, M-002A, M-003, and M-004**

| Parameter | Units | Sample Type | Minimum Sampling Frequency | Required Analytical Test Method and Minimum Level, units, respectively |
|---|---|---|---|---|
| | | | | this MRP |
| Total Suspended Solids | mg/L | Composite | Daily | See Section I.A.3. above |
| Ammonia-Nitrogen | mg/L | Grab | Weekly | See Section I.A.3. above, of this MRP |
| Temperature | °C | Grab | Weekly | See Section I.A.3. above, of this MRP |
| Total Dissolved Solids[14] | mg/L | Composite | Monthly | See Section I.A.3. above |
| Total Inorganic Nitrogen | mg/L | Composite | Monthly | See Section I.A.3. above |
| Total Nitrogen | mg/L | Composite | Monthly | See Section I.A.3. above |
| Cyanide, free[15] | µg/L | Grab | Monthly | See Sections I.A.2., I.A.3., above of this MRP and RL 5 µg/L |
| Total Recoverable Copper | µg/L | Composite | Monthly | See Sections I.A.2., I.A.3. above of this MRP and RL 0.5 µg/L |
| Toxicity[16] | TUc | See Section V.A, Below | Monthly | See Section V, Below |
| Total Hardness | mg/L | Composite | Monthly | See Section I.A.3. above |
| Bicarbonate | mg/L | Composite | Monthly | See Section I.A.3. above, of this MRP |
| Boron | mg/L | Composite | Monthly | See Section I.A.3. above |
| Calcium | mg/L | Composite | Monthly | See Section I.A.3. above |
| Carbonate | mg/L | Composite | Monthly | See Section I.A.3. above |
| Chloride | mg/L | Composite | Monthly | See Section I.A.3. above |
| Fluoride | mg/L | Composite | Monthly | See Section I.A.3. above, of this MRP |
| Magnesium | mg/L | Composite | Monthly | See Section I.A.3. above |
| Sodium | mg/L | Composite | Monthly | See Section I.A.3. above |
| Sulfate | mg/L | Composite | Monthly | See Section I.A.3. above |
| Total Recoverable Cadmium | µg/L | Composite | Monthly | See Sections I.A.2., I.A.3., above of this MRP and RL 0.5 µg/L |
| Chromium (VI) or Total Chromium[17] | µg/L | Composite | Monthly | See Sections I.A.2., I.A.3. above of this MRP and RL 5 µg/L, Total Cr, RL 2 µg/L |
| Total Recoverable Lead | µg/L | Composite | Monthly | See Sections I.A.2., I.A.3. |

[13] *$BOD_5$ is calculated daily based on a $BOD_5$/TOC correlation approved by the Regional Water Board.*

[14] *Except M-001B.*

[15] *Free cyanide is measured as aquatic free cyanide (ASTM Method D7237) without NaOH preservation.*

[16] *Except M-001B.*

[17] *If Total Chromium test result is greater than 11 µg/L, the following sample shall be tested for Chromium VI, until directed otherwise.*

**Table 4 Tertiary Effluent Monitoring at M-001B, M-002A, M-003, and M-004**

| Parameter | Units | Sample Type | Minimum Sampling Frequency | Required Analytical Test Method and Minimum Level, units, respectively |
|---|---|---|---|---|
| | | | | above of this MRP and RL 2 µg/L |
| Total Recoverable Mercury | µg/L | Composite | Monthly | See Sections I.A.2., I.A.3. above of this MRP and RL 0.05 µg/L |
| Total Recoverable Selenium | µg/L | Composite | Monthly | See Sections I.A.2., I.A.3. above of this MRP and RL 2 µg/L |
| Total Recoverable Silver | µg/L | Composite | Monthly | See Sections I.A.2., I.A.3., above of this MRP and RL 1 µg/L |
| Total Recoverable Zinc | µg/L | Composite | Monthly | See Sections I.A.2., I.A.3., above of this MRP |
| Bis (2-ethylhexyl) phthalate | µg/L | Grab | Monthly | See Sections I.A.2., I.A.3., above of this MRP |
| Bromodichliromethane[18] | µg/L | Grab | Monthly | See Sections I.A.2., I.A.3., above of this MRP, ML 5 µg/L |
| Aluminum | mg/L | Composite | Quarterly | See Section I.A.3. above |
| Antimony | mg/L | Composite | Quarterly | See Sections I.A.2., I.A.3., above of this MRP |
| Arsenic | µg/L | Composite | Quarterly, (See IV.A.3., below) | See Section I.A.3. above |
| Barium | µg/L | Composite | Quarterly, (See IV. A.3., below) | See Section I.A.3. above |
| Cobalt | µg/L | Composite | Quarterly (See IV.A.3., below) | See Section I.A.3. above, |
| Total Recoverable Nickel | µg/L | Composite | Quarterly (See IV.A.3., below) | See Section I.A.3. above, |
| 2,3,7,8-TCDD (Dioxin)[19] | µg/L | Composite | Quarterly (See IV.A.5., below) | See Section I.A.3. above, RL 1 pg/L |
| Volatile organic portion of remaining EPA Priority Pollutants (See Attachment G) | µg/L | Grab | Annually (See IV.A.4., below) | See Sections I.A.2., I.A.3., above of this MRP |
| Remaining EPA Priority Pollutants (See Attachment G) | µg/L | Composite | Annually (See IV.A.4., below) | See Sections I.A.2., I.A.3., above of this MRP |

2. The Discharger shall monitor tertiary treated effluent for DPs 001 and 002 at M-001A as follows:

[18] *Applies at M-003 only.*

[19] *Applies at M-003 and M-004 only.*

**Table 5 Effluent Monitoring Requirements at M-001A**

| Parameter | Units | Sample Type | Minimum Sampling Frequency | Required Test Method |
|---|---|---|---|---|
| Turbidity | NTU | Recorder | Continuous | -- |
| Total Chlorine Residual | mg/l | Recorder | Continuous | -- |
| Specific Conductance | µmhos/cm | Recorder | Continuous | -- |
| Total Dissolved Solids | mg/l | Composite | Monthly | See Sections I.A.2., I.A.3., above of this MRP |
| Toxicity | TUc | See Section V.A, Below | Monthly | See Section V, Below |

3. The monitoring frequency for those priority pollutants that are detected during the required quarterly monitoring at a concentration greater than the concentration specified for that pollutant[20] in Attachment I - Triggers for Monitoring Priority Pollutants shall be accelerated to monthly. To return to the monitoring frequency specified, the Discharger shall request and receive approval from the Regional Water Board's Executive Officer or designee.

4. The monitoring frequency for those priority pollutants that are detected during the required semi-annual or annual monitoring at a concentration greater than the concentration specified for that pollutant in Attachment I shall be accelerated to quarterly for one year. To return to the specified monitoring frequency, the Discharger shall request and receive approval from the Regional Water Board's Executive Officer or designee.

5. The Discharger is required to conduct quarterly monitoring for Dioxin for one year. After one year, if quarterly monitoring result show non-detect values at acceptable reporting levels, the Discharger may reduce the frequency of monitoring for Dioxin from quarterly to semi-annual monitoring upon approval by the Regional Water Board Executive Officer or designee.

## B. Secondary Effluent Monitoring at M-002, M-003 and M-004 with 20:1 Dilution

1. The Discharger shall monitor secondary treated effluent at M-002B, M-003 and M-004 when 20:1 dilution is provided by the receiving surface water at the time of the discharge, as follows:

[20] *For those priority pollutants without specified criteria values, accelerated monitoring is not required.*

**Table 6 Secondary Effluent Monitoring at M-002B to M-004 w/ 20:1 Dilution**

| Parameter | Units | Sample Type | Minimum Sampling Frequency | Required Test Method |
|---|---|---|---|---|
| Flow | mgd | Grab | Daily (when discharging) | -- |
| pH | pH units | Recorder/Totalizer | Continuous | -- |
| Total Chlorine Residual | mg/L | Recorder | Continuous | -- |
| $BOD_5$ | mg/L | Grab | Daily (when discharging) | See Section I.A.3., above, of this MRP |
| Total Dissolved Solids | mg/L | Grab | when discharging | " |
| Coliform Organisms | MPN per 100 ml[21] | Grab | Daily (when discharging) | See Sections I.A.2., I.A.3. & I.B., above of this MRP |
| Suspended Solids | mg/L | Grab | Daily (when discharging) | See Sections I.A.2., I.A.3. & I.B., above of this MRP |
| Total Hardness | mg/L | Grab | When discharge | See Section I.A.3., above, of this MRP |
| EPA Priority Pollutants | µg/L | Grab | Annually[22] (See IV.A.3., above) | See Sections I.A.2., I.A.3. & I.B., above of this MRP |

## V. WHOLE EFFLUENT TOXICITY TESTING REQUIREMENTS

### A. Toxicity Monitoring Requirements at M-001A, M-002A, M-003, and M-004

1. The Discharger shall conduct critical life stage chronic toxicity testing in accordance with Method 1002.0 - Survival and Reproduction test for water flea, *Ceriodaphnia dubia* as specified in "Short-term Methods for Estimating the Chronic Toxicity of Effluents and Receiving Waters to Freshwater Organisms", Fourth Edition, Environmental Monitoring Systems Laboratory, U.S. Environmental Protection Agency 2002, Cincinnati, Ohio (October 2002, EPA-821-R-02-013).

2. The Discharger shall establish procedures to ensure that the toxicity testing laboratory notifies the Discharger of the results of toxicity testing by the end of the next business day following the completion of such tests.

3. A minimum of one monthly chronic toxicity test shall be conducted on representative composite samples.

---

[21] *MPN/100mL = Most Probable Number per 100 milliliters*

[22] *Sample is collected from the first discharge, once a year.*

4. The Discharger shall increase the frequency of chronic toxicity testing to every two weeks whenever any test result exceeds 1.0 TUc. The first test under the accelerated schedule shall be conducted within two weeks of receiving notice of the test that exceeds 1.0 TUc, and every two weeks thereafter. The Discharger may resume the regular test schedule when two consecutive chronic toxicity tests result in 1.0 TUc, or when the results of the Initial Investigation Reduction Evaluation conducted by the Discharger have adequately addressed the identified toxicity problem.

5. The presence of chronic toxicity shall be estimated as specified in Short-Term Methods for Estimating the Chronic Toxicity of Effluents and Receiving Waters to Freshwater Organisms. Fourth Edition. EPA-821-R-02-013.

6. Results for both survival and reproduction endpoints shall be reported in TUc, where TUc = 100/NOEC or 100/ICp or ECp (p is the percent effluent). The no observed effect concentration (NOEC) is the highest concentration of toxicant to which organisms are exposed in a chronic test, that causes no observable adverse effect on the tests organisms (e.g., the highest concentration of toxicant to which the values for the observed responses are not statistically significant different from the controls). The inhibition concentration (IC) is a point estimate of the toxicant concentration that causes a given percent reduction in a non-quantal biological measurement (e.g., reproduction or growth) calculated from a continuous model (the EPA Interpolation Method). The effective concentration (EC) is a point estimate of the toxicant concentration that would cause a given percent reduction in quantal biological measurement (e.g., larval development, survival) calculated from a continuous model (e.g., probit).

7. Additional Testing Requirements

   a. A series of at least five dilutions and a control will be tested. Five dilutions of the series shall be within 60% to 100% effluent concentration.
   b. If organisms are not cultured in-house, concurrent testing with reference toxicants shall be conducted. Where organisms are cultured in-house, monthly reference toxicant testing is sufficient. Reference toxicants shall also be conducted using the same test conditions as the effluent toxicity test (e.g., same test duration, etc).
   c. If either of the reference toxicant test or the effluent tests do not meet all test acceptability criteria as specified in the manual[23], then the Discharger must re-sample and re-test within 14 days or as soon as the Discharger receives notification of failed tests.
   d. Control and dilution water should be receiving water or lab water, as appropriate, as described in the manual. If the dilution water used is different from the culture water, a second control, using culture water shall also be used.

---

[23] *Refers to USEPA Manual "Short-Term Methods for Estimating the Chronic Toxicity of Effluents and Receiving Waters to Freshwater Organisms. - 4th Ed., October 2002, EPA-821-R-02-013.*

8. Quality Assurance/Control:

   a. A quality assurance/quality control (QA/QC) program shall be instituted to verify the results of the effluent toxicity monitoring program. The QA/QC program shall include but shall not be limited to the following: (1) Selection of an independent testing laboratory; (2) Approval by the Regional Water Board's Executive Officer or Executive Officer's designee of the independent testing laboratory; (3) Once during the year, the Discharger shall split samples with the independent laboratory for conducting chronic toxicity testing; (4) Results from the independent laboratory shall be submitted to the Regional Water Board and the Discharger for evaluation; (5) The Discharger shall review the test acceptability criteria in accordance with the EPA test protocols, Short-Term Methods for Estimating the Chronic Toxicity of Effluents and Receiving Waters to Freshwater Organisms. Fourth Edition. EPA-821-R-02-013.

   b. Results from the independent laboratory of the annual QA/QC split samples are to be used for Quality Assurance/Quality Control (QA/QC) purposes only and not for purposes of determining compliance with other requirements of this Order.

9. The use of alternative methods for measuring chronic toxicity may be considered by the Executive Officer on a case–by-case basis. The use of a different test species, in lieu of conducting the required test species may be considered and approved by the Executive Officer on a case-by case basis upon submittal of the documentation supporting Discharger’s determination that a different species is more sensitive and appropriate.

10. Reporting: Results of all toxicity testing conducted within the month following the reporting period shall be submitted monthly in accordance with "Short-Term Methods for Estimating the Chronic Toxicity of Effluents and Receiving Waters to Freshwater Organisms. Fourth Edition. EPA-821-R-02-013.” The report shall include a determination of the median value of all chronic toxicity testing results conducted during the two previous months.

11. Whenever an Initial Investigation Reduction Evaluation is conducted, the results of the evaluation shall be submitted upon completion. In addition, monthly status reports shall be submitted as part of the Discharger’s monitoring report for the previous month.

## VI. LAND DISCHARGE MONITORING REQUIREMENTS – NOT APPLICABLE

# VII. RECLAMATION MONITORING REQUIREMENTS

## A. Monitoring Locations REC-001 to REC-004

1. The Discharger shall monitor recycled water at REC-001, REC-002, REC-003 and REC-004 as follows:

**Table 7 Reclamation Monitoring at REC-001 to REC-004**

| Parameter | Units | Sample Type | Minimum Sampling Frequency | Required Analytical Test Method |
|---|---|---|---|---|
| Flow | mgd | Recorder/Totalizer | Continuous | -- |
| pH | Standard units | Recorder/Totalizer | Continuous | -- |
| Turbidity[24] | NTU | Recorder | Continuous | -- |
| CT | mg-minutes/L | Recorder | Continuous[25] | -- |
| Coliform Organisms | MPN per 100 mL | Grab | Daily | See Section I.A.3., above, of this MRP |
| $BOD_5$ | mg/L | Composite | Daily | See Section I.A.3., above, of this MRP |
| Total Suspended Solids | mg/L | Composite | Daily | See Section I.A.3., above, of this MRP |
| TDS | mg/L | Composite | Monthly | See Section I.A.3., above, of this MRP |

## B. Monitoring Users

Whenever recycled water is supplied to a user, the Discharger shall record on a permanent log: the volume of recycled water supplied; the user of recycled water; the locations of those sites including the names of the groundwater management zones underlying the recycled water use sites; type of use (e.g. irrigation, industrial, etc); and the dates at which water is supplied. The Discharger shall submit annually a summary report of the recorded information by groundwater management zone to the Regional Water Board.

---

[24] *Turbidity samples shall be collected at M-002 and M-3, respectively.*

[25] *The CT and modal contact time shall be continuously calculated and recorded. Modal contact time and CT shall be calculated based on the minimum one-hour average value in a 24-hr period.*

## VIII. RECEIVING WATER MONITORING REQUIREMENTS – SURFACE WATER AND GROUNDWATER

### A. Flow Measurements at Monitoring Locations R-002U, R-003U, and R-004U During 20:1 Dilution.

The Discharger shall make provisions for the measurement of the receiving water flow at a suitable location in the creek and determine whether a 20:1 dilution exists at DP 002, DP 003, or DP 004, before discharging secondary treated effluent. A dilution of 20:1 or more exclusive of discharges to surface waters from upstream publicly owned treatment works is required at the point of discharge for the discharge of secondary effluent. Flow measurements shall be made prior to any direct discharge to the creeks and shall continue on a daily basis until the discharge is terminated.

### B. Monitoring Locations R-002U, R-003U, and R-004U

1. The Discharger shall monitor the receiving water at R-002U, R-003U, and R-004U for the following parameters/constituents when there is flowing water:

**Table 8 Receiving Water Monitoring at R-002U, R-003U, and R-004U**

| Parameter | Units | Sample Type | Minimum Sampling Frequency | Required Analytical Test Method |
|---|---|---|---|---|
| Flow | mgd | estimate | Weekly | -- |
| Dissolved Oxygen | mg/L | Grab | Weekly | See Sections I.A.3. above of this MRP |
| Temperature | $^{0}$C | " | Weekly | See Sections I.A.3. above of this MRP |
| pH | pH unit | Grab | Weekly | See Sections I.A.3. above of this MRP |
| Total Dissolved Solids | mg/L | Grab | Monthly | See Sections I.A.3. above of this MRP |
| Total Inorganic Nitrogen | mg/L | Grab | Monthly | See Sections I.A.3. above of this MRP |
| Total Hardness | mg/L | Grab | Quarterly | See Sections I.A.3. above of this MRP |
| Total Suspended Solids | mg/L | Grab | Quarterly | See Sections I.A.3. above of this MRP |
| EPA Priority Pollutants (see VIII.C.2., below) | µg/L | Grab | Annually | See Sections I.A.2., 3. above of this MRP |

### C. Monitoring Locations R-002D & R-003D

1. The Discharger shall monitor the receiving water at R-002D, R-003D, when there is flowing water upstream of the discharge point for the following constituents:

**Table 9 Receiving Water Monitoring at R-002D & R-003D**

| Parameter | Units | Sample Type | Minimum Sampling & Testing Frequency | Required Analytical Test Method |
|---|---|---|---|---|
| Dissolved Oxygen | mg/L | Grab | Weekly | See Section I.A.3., above, of this MRP |
| Temperature | $^0$C | Grab | Weekly | See Section I.A.3., above, of this MRP |
| pH | pH unit | Grab | Weekly | " |
| Color change, foam, deposition of material, odor | -- | Observe | Weekly | See Section I.A.3., above, of this MRP |
| Total Hardness | mg/L | Grab | Quarterly | See Sections I.A.3. above of this MRP |
| Total Suspended Solids | mg/L | Grab | Quarterly | " |
| EPA Priority Pollutants (see VIII.C.2., below) | µg/L | Grab | Annually | See Sections I.A.2., 3. above of this MRP |

2. For the annual monitoring of the heavy metals EPA Priority Pollutants, the total recoverable and total dissolved metal concentrations shall be determined.

### D. Regional Monitoring for Fish Flesh Testing:

Unless otherwise directed by the Regional Water Board Executive Officer, the Discharger shall implement the approved plan for the annual sampling and testing of mercury levels in fish flesh samples collected from the Santa Ana River. The frequency of monitoring and submission of reports shall be as stipulated in the approved plan.

### E. Monitoring Requirements for Groundwater – Not Applicable

Monitoring of groundwater by the Discharger is addressed in Order No.R8-2007-0039.

## IX. OTHER MONITORING REQUIREMENTS

### A. Biosolids Monitoring

1. Biosolids monitoring shall be conducted as follows:

**Table 10 Biosolids Monitoring Requirements**

| Biosolids Monitoring | Units | Type of Sample | Minimum Frequency of Sampling & Testing |
|---|---|---|---|
| Priority Pollutants | mg/kg | Grab | Semi-annually |
| Moisture Content (% solid) | mg/kg | Grab | Quarterly |

2. The Discharger shall maintain a permanent log of solids hauled away from the treatment facilities for use/disposal elsewhere, including the date hauled, the volume or weight (in dry tons), type (screening, grit, raw sludge, biosolids), application (agricultural, composting, etc), and destination. This information shall be reported quarterly.

## B. Stormwater Monitoring

The Discharger shall monitor discharges at Discharge Points S-001 to S-002 (as specified in Table 2 of this MRP) and submit monitoring reports in accordance with Attachments J and K - Stormwater Monitoring and Reporting Requirements.

## C. Water Supply Monitoring

1. In August of each year, a sample of each source of the water supplied to the sewered area shall be obtained and analyzed for total dissolved solids concentration expressed in "mg/L".

2. Monthly reports shall be submitted stating the amount (in percentage or acre-feet) supplied to the sewered area from each source of water and the resulting flow-weighted water supply quality for total dissolved solids.

## D. Pretreatment Monitoring and Reporting

1. The Discharger shall submit to the Regional Water Board and the EPA Region 9, a quarterly compliance status report. The quarterly compliance status reports shall cover the periods January 1 - March 31, April 1 - June 30, July 1 - September 30, and October 1 -December 31. Each report shall be submitted by the end of the month following the quarter, except that the report for April 1 - June 30 may be included in the annual report. This quarterly reporting requirement shall commence for the first full quarter following issuance of this Order. The reports shall identify:

   a. All significant industrial users (SIUs) which violated any standards or reporting requirements during that quarter;

   b. The violations committed (distinguish between categorical and local limits);

   c. The enforcement actions undertaken; and

d. The status of active enforcement actions from previous periods, including closeouts (facilities under previous enforcement actions which attained compliance during the quarter).

2. Annually, the Discharger shall submit a report to the Regional Water Board, the State Water Resources Control Board and the EPA Region 9 describing the pretreatment activities within the service area during the previous year. In the event that any control authority within the service area is not in compliance with any conditions or requirements of this Order or their approved pretreatment program (such as due to industrial user discharges, interjurisdictional agency agreement implementation issues, or other causes,) then the Discharger shall also include the reasons for non-compliance and state how and when the Discharger and the control authority shall comply with such conditions and requirements. This annual report shall cover operations from July 1 through June 30 of each fiscal year and is due on September 30 of each year. The report shall contain, but not be limited to, the following information:

a. A summary of analytical results from representative, flow-proportioned, 24-hour composite sampling of the POTWs' influent and effluent wastewaters for those pollutants which are known or suspected to be discharged by industrial users (IUs) as identified by EPA under Section 307(a) of the CWA. The summary will include the result of annual full priority pollutant scan, with quarterly samples analyzed only for those pollutants[26] detected in the full scan. The Discharger shall also provide any influent or effluent monitoring data for non-priority pollutants which the Discharger believes may be causing or contributing to Interference, Pass Through or adversely impacting sludge quality. Sampling and analysis shall be performed in accordance with the techniques prescribed in 40 CFR 136 and amendments thereto.

b. A discussion of any upset, interference, or pass-through incidents at the treatment plants (if any), which the Discharger knows or suspects were caused by IUs of the POTW system. The discussion shall include the following:

(1) The reasons why the incidents occurred, the corrective actions taken, and, if known, the name and address of the IU(s) responsible.

(2) A review of the applicable pollutant limitations to determine whether any additional limitations, or changes to existing requirements, may be necessary to prevent pass through, interference or noncompliance with sludge disposal requirements.

[26] *The Discharger is not required to analyze for asbestos.*

c. A complete and updated list of the Discharger's significant industrial users (SIUs), including names, Standard Industrial Classification (SIC) code(s) and addresses, and a list of any SIU deletions and/or additions. The Discharger shall provide a brief explanation for each deletion. The SIU list shall identify the SIUs subject to Federal Categorical Standards by specifying which set(s) of standards are applicable to each SIU. The list shall also indicate which SIUs are subject to local limitations more stringent than Federal Categorical Standards and those, which are not subject to local limits.

d. A list or table characterizing the industrial compliance status of each SIU, including:

(1) SIU name;
(2) Industrial category;
(3) The type (processes) of wastewater treatment in place;
(4) Number of samples taken by the POTW during the year;
(5) Number of samples taken by the SIU during the year;
(6) Whether all needed certifications (if allowed) were provided by SIUs which have limits for total toxic organics;
(7) Federal and Regional Standards violated during the year, reported separately;
(8) Whether the SIU at any time in the year was in Significant Noncompliance (SNC)[27], as defined by 40 CFR 403.12 (f)(2)(vii); and
(9) A summary of enforcement actions against the SIU taken during the year, including the type of action, final compliance date, and amount of fines assessed/collected (if any). Proposed actions, if known, should be included.
(10) Number of inspections conducted at each SIU during the year.

e. A compliance summary table which includes:

(1) SIU's which were in SNC at any time during the year;
(2) The total number of SIUs which are in SNC with pretreatment compliance schedules during the year;
(3) The total number of notices of violation and administrative orders issued against SIUs during the year;
(4) The total number of civil and criminal judicial actions filed against SIUs during the year;
(5) The number of SIUs which were published as being in SNC during the year; and
(6) The number of IUs from which penalties were collected during the year.

[27] *SNC is determined at the beginning of each quarter based on data of the previous six months.*

f. A short description of any significant changes in operating the pretreatment program which differ from the previous year including, but not limited to changes concerning:

(1) The program's administrative structure;
(2) Local industrial discharge limitations;
(3) Monitoring program or monitoring frequencies;
(4) Legal authority or enforcement policy;
(5) Funding mechanisms; and
(6) Resource requirements and/or staffing levels.

g. A summary of the annual pretreatment budget, including the cost of pretreatment program functions and equipment purchases.

h. A summary of public participation activities to involve and inform the public.

i. A description of any changes in sludge disposal methods and a discussion of any concerns not described elsewhere in the report.

3. The cumulative number of industrial users that the Discharger has notified regarding Baseline Monitoring Reports and the cumulative number of industrial user responses.

4. The Discharger shall submit the quarterly compliance status reports and the annual pretreatment report to EPA Region 9, the State Board and the Regional Water Board.

## X. REPORTING REQUIREMENTS

### A. General Monitoring and Reporting Requirements

1. The Discharger shall comply with all Standard Provisions (Attachment D) related to monitoring, reporting, and recordkeeping.
2. All analytical data shall be reported with method detection limit[28] (MDLs) and with identification of either reporting level or limits of quantitation (LOQs). Quality assurance/quality control data shall be submitted upon request. Test results shall be reported in either milligrams/liter (mg/L) or micrograms/liter (µg/L), or picograms/L (ng/L), as appropriate.
3. For effluent wastewater monitoring:

[28] *The standardized test procedure to be used to determine the method detection limit (MDL) is given at Appendix B, 'Definition and Procedure for the Determination of the Method Detection Limit' of 40 CFR 136.*

a. The Discharger shall require its testing laboratory to calibrate the analytical system down to the minimum level (ML)[29] specified in Attachment H for priority pollutants with effluent limitations in this Order, unless an alternative minimum level is approved by the Regional Water Board's Executive Officer. When there is more than one ML value for a given substance, the Discharger shall use the ML values, and their associated analytical methods, listed in Attachment H that are below the calculated effluent limitation. The Discharger may select any one of those cited analytical methods for compliance determination. If no ML value is below the effluent limitation, then the lowest ML value and its associated analytical method, listed in Attachment H shall be used. Any internal quality control data associated with the sample must be reported when requested by the Executive Officer. The Regional Water Board will reject the quantified laboratory data if quality control data is unavailable or unacceptable.

b. The Discharger shall report the results of analytical determinations for the presence of chemical constituents in a sample using the following reporting protocols:

(1) Sample results greater than or equal to the reported ML shall be reported as measured by the laboratory (i.e., the measured chemical concentration in the sample).

(2) Sample results less than the reported ML, but greater than or equal to the laboratory's current Method Detection Limit (MDL)[30], shall be reported as "Detected, but Not Quantified," or "DNQ." The estimated chemical concentration of the sample shall also be reported.

(3) Sample results not detected above the laboratory's MDL shall be reported as "not detected" or "ND."

4. For receiving water monitoring and for those priority pollutants without effluent limitations, the Discharger shall require its testing laboratory to quantify constituent concentrations to the lowest achievable MDL as determined by the procedure found in 40 CFR 136 (revised as of April 11, 2007). In situations where the most stringent applicable receiving water objective (freshwater or human health (consumption of organisms only), as specified for that pollutant in 40 CFR 131.3831 is below the minimum level value specified in Attachment H and the Discharger cannot achieve an MDL value for that pollutant below the ML value, the Discharger shall submit justification why a lower MDL value cannot be achieved. Justification shall be submitted together with monthly monitoring reports.

---

[29] *Minimum level is the concentration at which the entire analytical system must give a recognizable signal and acceptable point. The ML is the concentration in a sample that is equivalent to the concentration of the lowest calibration standard analyzed by a specific analytical procedure, assuming that all the method specified sample weights, volumes, and processing steps have been followed.*

[30] *MDL is the minimum concentration of a substance that can be measured and reported with 99 percent confidence that the analytical concentration is greater than zero, as defined in 40 CFR 136, Appendix B, revised as of April 11, 2007.*

[31] *See Federal Register/ Vol. 65, No. 97 / Thursday, May 18, 2000 / Rules and Regulations.*

5. For non-priority pollutants monitoring, all analytical data shall be reported with method detection limits, as determined by the procedure found in 40 CFR 136 (revised as of April 11, 2007).
6. Any internal quality control data associated with the sample must be reported when requested by the Executive Officer. The Regional Water Board will reject the quantified laboratory data if quality control data is unavailable or unacceptable.
7. Discharge monitoring data shall be submitted in a format acceptable by the Regional Water Board. Specific reporting format may include preprinted forms and/or electronic media. The results of all monitoring required by this Order shall be reported to the Regional Water Board, and shall be submitted in such a format as to allow direct comparison with the limitations and requirements of this Order.
8. The Discharger shall tabulate the monitoring data to clearly illustrate compliance and/or noncompliance with the requirements of the Order.
9. The Discharger shall submit to the Regional Water Board reports necessary to determine compliance with effluent limitations in this Order and shall follow the chemical nomenclature and sequential order of priority pollutant constituents shown in Attachment G – Priority Pollutant Lists for reporting the required annual priority pollutant monitoring.
10. The reports for June and December shall include a roster of plant personnel, including job titles, duties, and level of State certification for each individual.
11. The Discharger shall report monitoring results for specific parameters in accordance with the following table:

**Table 11 Reporting Requirements**

| Parameter | Measurement |
|---|---|
| Flow | Daily total flow |
| pH | Daily High and daily low |
| Total Residual Chlorine | Daily Maximum |
| Electrical Conductivity | Daily High |
| Turbidity | Daily maximum |

12. The Discharger shall file a written report with the Regional Water Board within ninety (90) days after the average dry-weather waste flow for any month equals or exceeds 75 percent of the design capacity of the waste treatment and/or disposal facilities. The Discharger's senior administrative officer shall sign a letter which transmits that report and certifies that the policy making body is adequately informed about it. The report shall include:

    a. Average daily flow for the month, the date on which the instantaneous peak flow occurred, the rate of that peak flow, and the total flow for the day.

    b. The Discharger's best estimate of when the average daily dry-weather flow rate will equal or exceed the design capacity of the treatment facilities.

c. The Discharger's intended schedule for studies, design, and other steps needed to provide additional capacity for the waste treatment and/or disposal facilities before the waste flow rate equals the capacity of present units.

## B. Self Monitoring Reports (SMRs)

1. At any time during the term of this permit, the State or Regional Water Board may notify the Discharger to electronically submit Self-Monitoring Reports (SMRs) using the State Water Board's California Integrated Water Quality System (CIWQS) Program Web site (http://www.waterboards.ca.gov/ciwqs/index.html). Until such notification is given, the Discharger shall submit hard copy SMRs. The CIWQS Web site will provide additional directions for SMR submittal in the event there will be service interruption for electronic submittal.

2. The Discharger shall report in the SMR the results for all monitoring specified in this MRP under Sections III through IX. Additionally, the Discharger shall report in the SMR the results of any special studies, acute and chronic toxicity testing, TRE/TIE, PMP, and Pollution Prevention Plan required by Special Provisions – VI.C. of this Order. The Discharger shall submit monthly, quarterly, and annual SMRs including the results of all required monitoring using USEPA-approved test methods or other test methods specified in this Order. If the Discharger monitors any pollutant more frequently than required by this Order, the results of this monitoring shall be included in the calculations and reporting of the data submitted in the SMR.

3. Monitoring periods and reporting for all required monitoring shall be completed according to the following schedule:

**Table 12 Monitoring Periods and Reporting Schedule**

| Sampling Frequency | Monitoring Period Begins On | Monitoring Period | SMR Due Date |
|---|---|---|---|
| Continuous | The effective day of this Order | All | Submit with monthly SMR |
| Daily | The effective day of this Order | (Midnight through 11:59 PM) or any 24-hour period that reasonably represents a calendar day for purposes of sampling. | Submit with monthly SMR |
| Weekly | The effective day of this Order | Sunday through Saturday | Submit with monthly SMR |
| Monthly | First day of calendar month following permit effective date or on permit date if that date is first day of the month | 1st day of calendar month through last day of calendar month | First day of the second month following the reporting period, submit as monthly SMR |
| Quarterly[32] | Closest of January 1, April 1, July 1, or October 1 following permit effective date | January 1 through March 31, samples are collected in January;<br>April 1 through June 30; samples are | First day of the second month following the reporting period, submit |

[32] *Quarterly monitoring result for certain constituents may be used to satisfy the annual monitoring for the same constituents.*

**Table 12 Monitoring Periods and Reporting Schedule**

| Sampling Frequency | Monitoring Period Begins On | Monitoring Period | SMR Due Date |
|---|---|---|---|
| | | collected in April;<br>July 1 through September 30; samples are collected in July;<br>October 1 through December 31; samples are collected in October | with monthly SMR |
| Semi-annually | Closest of January 1 or July 1 following permit effective date | January 1 through June 30, samples are collected in January.<br>July 1 through December 31, samples are collected in July. | first day of the second month following the reporting period, submit with monthly SMR |
| Annually | The effective day of this Order | January 1 through December 31, see Table 1. | April 1 each year including report requirements in Attachments<br>Pretreatment report due to September, 1 |

4. Reporting Protocols. The Discharger shall report with each sample result the applicable reported Minimum Level (ML) and the current Method Detection Limit (MDL), as determined by the procedure in Part 136.

   The Discharger shall report the results of analytical determinations for the presence of chemical constituents in a sample using the following reporting protocols:

   a. Sample results greater than or equal to the reported ML shall be reported as measured by the laboratory (i.e., the measured chemical concentration in the sample).

   b. Sample results less than the RL, but greater than or equal to the laboratory's MDL, shall be reported as "Detected, but Not Quantified," or DNQ. The estimated chemical concentration of the sample shall also be reported.

   c. For the purposes of data collection, the laboratory shall write the estimated chemical concentration next to DNQ as well as the words "Estimated Concentration" (may be shortened to "Est. Conc."). The laboratory may, if such information is available, include numerical estimates of the data quality for the reported result. Numerical estimates of data quality may be percent accuracy (+ a percentage of the reported value), numerical ranges (low to high), or any other means considered appropriate by the laboratory.

   d. Sample results less than the laboratory's MDL shall be reported as "Not Detected," or ND.

e. Dischargers are to instruct laboratories to establish calibration standards so that the ML value (or its equivalent if there is differential treatment of samples relative to calibration standards) is the lowest calibration standard. At no time is the Discharger to use analytical data derived from extrapolation beyond the lowest point of the calibration curve.

5. The Discharger shall submit hard copy SMRs (with an original signature) when required by subsection B.1 above in accordance with the following requirements:

   a. The Discharger shall arrange all reported data in a tabular format. The data shall be summarized to clearly illustrate whether the facility is operating in compliance with interim and/or final effluent limitations.

   b. The Discharger shall attach a cover letter to the SMR. The information contained in the cover letter shall clearly identify violations of the WDRs; discuss corrective actions taken or planned; and the proposed time schedule for corrective actions. Identified violations must include a description of the requirement that was violated and a description of the violation.

   c. SMRs must be submitted to the Regional Water Board, signed and certified as required by the Standard Provisions (Attachment D), to the address listed below:

      California Regional Water Quality Control Board
      Santa Ana Region
      3737 Main Street, Suite 500
      Riverside, CA 92501-3348

6. The Discharger shall attach a cover letter to the SMR. The information contained in the cover letter shall clearly identify violations of the WDRs; discuss corrective actions taken or planned; and the proposed time schedule for corrective actions. Identified violations must include a description of the requirement that was violated and a description of the violation.

7. By April 1 of each year, the Discharger shall submit an annual report to the Regional Water Board. The annual report shall include the following:

   a. Tabular and graphical summaries of the monitoring data obtained during the previous year;

   b. A discussion of the compliance record and the corrective actions taken or planned, which may be needed to bring the discharge into full compliance with the waste discharge requirements;

   c. A summary of the quality assurance (QA) activities for the previous year; and

d. For priority pollutant constituents that do not have effluent limitations but are required to be monitored, the Discharger shall evaluate the monitoring data obtained during the previous year and determine whether detected constituents are at levels that would warrant reopening the permit to include effluent limitations for such constituent(s). To conduct this evaluation, the concentration of detected constituents shall be compared to the most stringent applicable receiving water objectives (freshwater or human health (consumption of organisms only) as specified for that pollutant in 40 CFR 131.3833). The Discharger shall include a discussion of the corrective actions taken or planned to address values above receiving water objectives.

## C. Discharge Monitoring Reports (DMRs)

1. As described in Section X.B.1 above, at any time during the term of this permit, the State or Regional Water Board may notify the Discharger to electronically submit SMRs that will satisfy federal requirements for submittal of Discharge Monitoring Reports (DMRs). Until such notification is given, the Discharger shall submit DMRs in accordance with the requirements described below.

2. DMRs must be signed and certified as required by the standard provisions (Attachment D). The Discharger shall submit the original DMR and one copy of the DMR to the address listed below:

**Table 13 Monitoring Reporting Submittal**

| Standard Mail | FedEx/UPS/ Other Private Carriers |
|---|---|
| State Water Resources Control Board<br>Division of Water Quality<br>c/o DMR Processing Center<br>PO Box 100<br>Sacramento, CA 95812-1000 | State Water Resources Control Board<br>Division of Water Quality<br>c/o DMR Processing Center<br>1001 I Street, 15th Floor<br>Sacramento, CA 95814 |

3. All discharge monitoring results must be reported on the official USEPA pre-printed DMR forms (EPA Form 3320-1). Forms that are self-generated will not be accepted unless they follow the exact same format of EPA Form 3320-1.

   Regional Administrator
   U. S. Environmental Protection Agency
   Region 9 – Attention WTR – 7
   75 Hawthorne Street
   San Francisco, CA 94105

[33] *See Federal Register/ Vol. 65, No. 97 / Thursday, May 18, 2000 / Rules and Regulations.*

## D. Other Reports

1. The Discharger shall report the results of any special studies, acute and chronic toxicity testing, TRE/TIE, PMP, and Pollution Prevention Plan required by Special Provisions – VI.C. of this Order. The Discharger shall submit reports with the first monthly SMR scheduled to be submitted on or immediately following the report due date in compliance with SMR reporting requirements described in subsection X.B.5 above.

**2. Site Spills**

a. In accordance with the requirements of Health and Safety Code section 5411.5, the Discharger shall provide notification to the local health officer or the director of environmental health with jurisdiction over the affected water body of any unauthorized release of sewage or other waste that causes, or probably will cause, a discharge to any waters of the state.

b. In accordance with the requirements of Water Code section 13271, the Discharger shall provide notification to the Office of Emergency Services of the release of reportable amounts of hazardous substances or sewage that causes, or probably will cause, a discharge to any waters of the state. The California Code of Regulations, Title 23, section 2250, defines a reportable amount of sewage as being 1,000 gallons. The phone number for reporting these releases to the Office of Emergency Services is (800) 852-7550.

c. The Discharger shall notify the Regional Water Board of any unauthorized release of sewage from its wastewater treatment plant that causes, or probably will cause, a discharge to a water of the state as soon as possible, but not later than two (2) hours after becoming aware of the release. This notification does not need to be made if the Discharger has notified the Office of Emergency Services. The phone number for reporting these releases of sewage to the Regional Water Board is (951) 782-4130. At a minimum, the following information shall be provided:

(1) The location, date, and time of the release.

(2) The water body that received or will receive the discharge.

(3) An estimate of the amount of sewage or other waste released and the amount that reached a surface water at the time of notification.

(4) If ongoing, the estimated flow rate of the release at the time of the notification.

(5) The name, organization, phone number and email address of the reporting representative.

d. As soon as possible, but not later than twenty four (24) hours after becoming aware of an unauthorized discharge of sewage or other waste from its wastewater treatment plant to a water of the state, the Discharger shall submit a statement to the Regional Water Board by email at spillreportR8@waterboards.ca.gov. If the discharge is 1,000 gallons or more, this statement shall certify that the State Office of Emergency Services has been notified of the discharge in accordance with Water Code section 13271. The statement shall also certify that the local health officer or director of environmental health with jurisdiction over the affected water bodies has been notified of the discharge in accordance with Health and Safety Code section 5411.5. The statement shall also include at a minimum the following information:

(1) Agency and Order No.

(2) The location, date, and time of the discharge.

(3) The water body that received the discharge.

(4) A description of the level of treatment of the sewage or other waste discharged.

(5) An initial estimate of the amount of sewage or other waste released and the amount that reached a surface water.

(6) The Office of Emergency Services control number and the date and time that notification of the incident was provided to the Office of Emergency Services.

(7) The name of the local health officer or director of environmental health representative notified (if contacted directly); the date and time of notification; and the method of notification (e.g., phone, fax, email).

**Attachment F – Fact Sheet**

## TABLE OF CONTENTS

Attachment F – Fact Sheet ..... 4
I. Permit Information ..... 5
II. Facility Description ..... 7
A. Description of Wastewater and Biosolids Treatment or Controls ..... 7
3. Recycled Water Uses ..... 9
B. Discharge Points and Receiving Waters ..... 9
C. Summary of Previous Requirements and Self-Monitoring Report (SMR) Data ..... 11
D. Compliance Summary ..... 16
E. Planned Changes – Not Applicable ..... 17
III. Applicable Plans, Policies, and Regulations ..... 18
A. Legal Authorities ..... 18
B. California Environmental Quality Act (CEQA) ..... 18
C. State and Federal Regulations, Policies, and Plans ..... 18
D. Impaired Water Bodies on CWA 303(d) List ..... 21
E. Other Plans, Polices and Regulations-Not Applicable ..... 21
IV. Rationale For Effluent Limitations and Discharge Specifications ..... 22
A. Discharge Prohibitions ..... 22
B. Technology-Based Effluent Limitations ..... 22
1. Scope and Authority ..... 22
2. Applicable Technology-Based Effluent Limitations for 20:1 dilution ..... 23
C. WQBEL-Based Effluent Limitations for DP 001 through DP 004 ..... 23
1. Scope and Authority ..... 23
2. Applicable Beneficial Uses and Water Quality Criteria and Objectives ..... 24
3. Determining the Need for WQBELs ..... 26
4. WQBEL Calculations ..... 29
5. Whole Effluent Toxicity (WET) ..... 31
D. BPJ - Based Effluent Specifications for DP 001 through DP 004 ..... 31
E. Summary of Final Effluent Limitations ..... 31
1. Satisfaction of Anti-Backsliding Requirements ..... 31
2. Satisfaction of Antidegradation Policy ..... 31
3. Stringency of Requirements for Individual Pollutants ..... 32
4. Summary of Final Effluent Limitations ..... 32
F. Interim Effluent Limitations - Not Applicable ..... 33
G. Land Discharge Specifications – Not Applicable ..... 33
H. Reclamation Specifications ..... 33
I. Stormwater Discharge Requirements ..... 34
J. Groundwater Recharge Requirements – Not Applicable ..... 34
V. Rationale for Receiving Water Limitations ..... 34
A. Surface Water ..... 34
B. Groundwater – Not Applicable ..... 34
VI. Rationale for Monitoring and Reporting Requirements ..... 35
A. Influent Monitoring ..... 35
B. Effluent Monitoring ..... 35

C. Whole Effluent Toxicity Testing Requirements ..... 36
D. Receiving Water Monitoring ..... 36
1. Surface Water ..... 36
2. Groundwater – Not Applicable ..... 36
E. Other Monitoring Requirements ..... 37
VII. Rationale for Provisions ..... 37
A. Standard Provisions ..... 37
B. Special Provisions ..... 37
1. Reopener Provisions ..... 37
2. Special Studies and Additional Monitoring Requirements ..... 38
3. Best Management Practices and Pollution Prevention ..... 38
4. Construction, Operation, and Maintenance Specifications ..... 38
5. Special Provisions for Municipal Facilities - POTWs Only ..... 38
6. Other Special Provisions – Not Applicable ..... 39
7. Compliance Schedules – Not Applicable ..... 39
VIII. Public Participation ..... 39
A. Notification of Interested Parties ..... 39
B. Written Comments ..... 39
C. Public Hearing ..... 40
D. Waste Discharge Requirements Petitions ..... 40
E. Information and Copying ..... 41
F. Register of Interested Persons ..... 41
G. Additional Information ..... 41

## List of Tables

Table 1. Facility Information ..... 5
Table 2. List of Orders adopted for each Facility ..... 6
Table 3. Summary of Service Areas & Population Served ..... 7
Table 4. Plant Treatment Processes ..... 8
Table 5. Summary of Discharge Points and Receiving Waters ..... 10
Table 6. RP-1 Historic Effluent Limitations and Monitoring Data at M-001A and M-001B ..... 11
Table 7. RP-1 & RP-4 Historic Effluent Limitations and Monitoring Data at M-002A and M-002B ..... 13
Table 8. RP-5 Historic Effluent Limitations and Monitoring Data at M-003 ..... 14
Table 9. CCWRF Historic Effluent Limitations and Monitoring Data at M-004 ..... 15
Table 10. Compliance Status RP-1, RP-5 and CCWRF ..... 16
Table 11. Basin Plan Beneficial Uses ..... 19
Table 12. Summary of Technology-Based Effluent Limits for Secondary Treatment ..... 23
Table 13. Applicable Basin Plan Surface Water Quality Objectives ..... 24
Table 14. RP-1 - Comparing DP 001 Effluent Data with WQOs ..... 28
Table 15. RP-1 & RP-4 - Comparing DP 001 & DP 002 Effluent Data with WQOs ..... 28
Table 16. RP-5 - Comparing DP 003 Effluent Data with WQOs ..... 28
Table 17. CCWRF - Comparing DP 004 Effluent Data with WQOs ..... 29
Table 18. Cyanide Limits in prior Orders ..... 29
Table 19. Calculation of Effluent Limits at DP 001 and DP002 ..... 30
Table 20. Calculation of Effluent Limits at DP 003 ..... 30
Table 21. Calculation of Effluent Limits at DP 004 ..... 30
Table 22. Tertiary Effluent $BOD_5$ and TSS Limits ..... 31
Table 23. Summary of Water Quality-Based Effluent Limits at all DPs ..... 32
Table 24. TDS Limitations ..... 34

## ATTACHMENT F – FACT SHEET

As described in Section II of this Order, this Fact Sheet includes the legal requirements and technical rationale that serve as the basis for the requirements of this Order.

This Order has been prepared under a standardized format to accommodate a broad range of discharge requirements for Dischargers in California. Only those sections or subsections of this Order that are specifically identified as “not applicable” have been determined not to apply to this Discharger. Sections or subsections of this Order not specifically identified as “not applicable” are fully applicable to this Discharger.

# I. PERMIT INFORMATION

The following table summarizes administrative information related to the facility.

**Table 1. Facility Information**

| | | | | | |
|---|---|---|---|---|---|
| **WDID** | | **8 332818001** | | | |
| **Discharger/Operator** | | Inland Empire Utilities Agency | | | |
| **Name of Facility** | | Regional Water Recycling Plant No. 1 (RP-1) | Regional Water Recycling Plant No. 4 (RP-4) | Regional Water Recycling Plant No. 5 (RP-5) | Carbon Canyon Water Reclamation Facility (CCWRF) |
| **Address** | | 2450 East Philadelphia Street. | 12811 Sixth Street | 6068 Kimball Avenue, Building "C" | 14950 Telephone Avenue |
| | | Ontario, CA 91761 | Rancho Cucamonga, CA 91729 | Chino, CA 91708 | Chino, CA 91710 |
| | | San Bernardino County | | | |
| **Facility Contact, Title and Phone** | | Patrick O. Sheilds, Executive Manager of Operations, (909) 993-1806 | | | |
| **Authorized Person to Sign and Submit Reports** | | Patrick O. Sheilds, Executive Manager of Operations, (909) 993-1806 | | | |
| **Address** | | 6075 Kimball Avenue, Chino, CA 91708 | | | |
| **Mailing/Billing Address** | | P.O. Box 9020, Chino Hills, CA 91709 | | | |
| **Major or Minor Facility** | | Major | | | |
| **Type of Facility** | | POTW | | | |
| **Threat to Water Quality** | | 1 | | | |
| **Complexity** | | A | | | |
| **Pretreatment Program** | | Y | | | |
| **Reclamation Requirements** | | Y | | | |
| **Facilities Permitted Flow** | | 84.4 million gallons per day (mgd) | | | |
| **Facility Design Flow** | | 44 mgd | 14 mgd | 15 mgd (w/ 1.3 mgd flow from sludge treatment system at Regional Water Recycling Plant No.2 (RP-2)) | 11.4 mgd |
| **Watershed** | | Santa Ana River watershed | | | |
| **Receiving Water** | **Surface Waters** | Prado Park Lake, Reach 1A of Chino Creek, Reach 1 of Cucamonga Creek, Mill Creek, and Reach 3 of Santa Ana River | | Reach 1B of Chino Creek and Reach 3 of Santa Ana River | Reach 2 of Chino Creek and Reach 3 of Santa Ana River |
| | **Groundwater** | Chino North "Maximum Benefit" Groundwater Management Zone/Chino 1, 2, and 3 "Antidegradation" Groundwater Management Zones | | | |
| **Receiving Water Type** | | Inland surface water and groundwater | | | |

**A.** Inland Empire Utilities Agency (hereinafter Discharger, or IEUA) is the owner and operator of four regional water recycling facilities, appurtenant structures[1], sewer pipeline system, and recycled water distribution system (hereinafter Facilities). The four Facilities are linked as shown in Figures 1 and 2 of Attachment C.

For the purposes of this Order, references to the "discharger" or "permittee" in applicable federal and State laws, regulations, plans, or policy are held to be equivalent to references to the Discharger herein.

**B.** The Discharger produces tertiary treated wastewater and discharges to surface waters at different locations, including discharges into Reaches IA, IB and 2 of Chino Creek, Reach 1 of Cucamonga Creek, Prado Park Lake, and Reach 3 of the Santa Ana River. Chino Creek, Reach 1 of Cucamonga Creek, Prado Park Lake, and the Santa Ana River are waters of the United States. Discharges from the Facilities are regulated pursuant to the following Orders tabulated below for each facility:

**Table 2. List of Orders adopted for each Facility**

| Facility | Order No. | Order Adoption Date | Expiration Date | WDR Regulatory Scope |
|---|---|---|---|---|
| RP-1 & RP-4 | R8-2006-0010, amended by R8-2007-0045 and R8-2007-0078 | May 19, 2006 | May 1, 2011 | Regulates discharges to Prado Park Lake and Reach 1 of Cucamonga Creek, tributaries to Reach 3 of Santa Ana River and recycled water use. |
| RP-5 | R8-2008-0028 | Sept. 5, 2008 | Sept. 1, 2013 | Regulates discharges to Reach 1B of Chino Creek, a tributary to Reach 3 of Santa Ana River and recycled water use. |
| CCWRF | R8-2004-0020, amended by R8-2006-0038 and R8-2007-0078 | August 13, 2004 | August 1, 2009 | Regulates discharges to Reach 2 of Chino Creek, a tributary to Reach 3 of Santa Ana River and recycled water use. |

The terms and conditions of the current Orders remain in effect until new Waste Discharge Requirements and NPDES permit are adopted pursuant to this Order.

[1] *Appurtenant structures among other things include the Regional Water Recycling Plant No.2 (RP-2) facility. RP-2 is an existing tertiary wastewater treatment plant owned by the Discharger. Cease and Desist Order No. 94-74 required the Discharger to relocate the liquid treatment facilities at RP-2 to a site not subject to flooding. Consequently, RP-5 replaced RP-2. Only the sludge treatment systems at RP-2 are operational and there are no longer surface water discharges from RP-2. Primary and waste activated sludge from RP-5 and CCWRF are piped to the regional solids handling facility at RP-2 for sludge treatment. Dewatered wastewater from RP-2 is pumped back to the headworks of RP-5.*

**C.** The Discharger filed a report of waste discharge and submitted an application for a new Waste Discharge Requirements (WDRs) and National Pollutant Discharge Elimination System (NPDES) permit on January 27, 2009. The Discharger requests consolidation of all three permits into one permit for the Discharger's Facilities. This request is consistent with the interconnected nature of the facilities and the approach specified in the individual Orders to regulate certain constituents (TDS and TIN) on an agency-wide, flow-weighted average basis. This new permit will regulate the discharges from the Facilities to surface waters and will also regulate recycled water use. Supplemental information was requested starting February 13, 2009. The latest supplemental information was received on May 21, 2009. A site visit was conducted on May 19, 2009, to observe operations and collect additional data to develop permit limitations and conditions. The application was deemed complete on May 21, 2009.

## II. FACILITY DESCRIPTION

### A. Description of Wastewater and Biosolids Treatment or Controls

#### 1. Discharger and Service Area

Inland Empire Utilities Agency (IEUA) is a municipal water supply and wastewater treatment agency. IEUA owns and operates a regional wastewater collection system and water recycling plants, including RP-1, RP-4, RP-5, and CCWRF. The treatment Facilities receive domestic, commercial, and industrial waste waters generated within the IEUA service areas. Wastewater can be diverted to different plants via available routing options built into the regional system (see Figure 1 of Attachment C for further detail). After treatment, recycled water can be discharged to nearby outfall(s) or recycled for industrial uses, irrigation and groundwater recharge. The following table summarizes the service areas and the population served by each Facility.

**Table 3. Summary of Service Areas & Population Served**

| Facility | Population Served | Cities/Agency Served |
|---|---|---|
| RP-1 & RP-4 | 602,000 | Chino, Fontana, Montclair, Upland, Ontario, and Cucamonga Valley Water District |
| RP-5 | 104,000 | Chino, Chino Hills, and Ontario; Montclair and Upland via CCWRF |
| CCWRF | 126,400 | Chino, Chino Hills, Montclair, and Upland |

Attachment B provides a map of the area at each water recycling Facility.

Attachment C provides the IEUA System-Wide influent flow interrelationship diagram, IEUA System-Wide Water Recycling Distribution System and treatment flow schematic for each Facility.

2. Design Characteristics and Biosolids Treatment - The treatment processes at each Facility are tabulated as follows:

**Table 4. Plant Treatment Processes**

| Facility | RP-1 | RP-4 | RP-5 | CCWRF |
|---|---|---|---|---|
| **Preliminary & Primary Treatment** | Mechanical bar screens, grit chambers, chemical addition, primary clarifiers, flow equalization /emergency storage basins | Mechanical bar screens, grit chambers, chemical addition, primary clarifiers | Mechanical bar screen, grit chambers, one storage basin (, primary clarifiers | Mechanical bar screen, grit removal, chemical addition, primary clarifiers, emergency storage basin |
| **Secondary Treatment** | Aeration trains with oxic/anoxic zones, secondary clarifiers | Aeration basins with oxic /anoxic zones, secondary clarifiers | Aeration basins with anoxic/oxic zones, secondary clarifiers | Aeration basins with anoxic/oxic zones, secondary clarifiers |
| **Tertiary Treatment** | Coagulation/Flocculation, sedimentation, filtration, chlorination, dechlorination | Chemical addition (Alum), filtration, chlorination, de-chlorination (not used), emergency diversion pond | Flocculation, filtration, chlorination, de-chlorination, emergency overflow pond | Coagulation/flocculation, filtration, chlorination,dechlorination |
| **Design Capacity, mgd** | 44 | 14 | 15 w/ 1.3 mgd RP-2 sludge treatment system wastewater flows | 11.4 |
| **Solids Handling** | The solids handling for these facilities takes place at RP-1. RP-4 primary sludge and waste activated sludge are conveyed through the sewer system and enter RP-1 as influent. Solids treatment includes gravity thickener and dissolved air flotation thickeners, anaerobic digestion, digester gas utilization, and belt press dewatering. Belt press wash water is pumped to the DAFT units where the solids can be recovered and the remaining liquid is returned to the activated sludge process. Belt press filtrate is pumped to the Non-Reclaimable Waste System (NRWS) line and is ultimately treated by the County Sanitation Districts of Los Angeles County. | | Primary and waste activated sludge wastes from RP-5 and CCWRF are piped to the regional solids handling facility at RP-2 for sludge treatment. The solids treatment system at RP-2 includes gravity thickeners; dissolved air flotation thickeners; anaerobic digestion; aerobic digestion; belt press, and centrifuge dewatering. Dewatered biosolids are hauled away to approved disposal sites<br>Sludge treatment system wastewater from RP-2 is pumped back to headworks of RP-5. | |

### 3. Recycled Water Uses

The Discharger delivers tertiary treated wastewater through the regional recycled water system at various locations for recycling use. The recycled water is used for landscape irrigation by public and private users, for agricultural irrigation by farmers, for dust control at construction sites and for industrial purposes, including equipment/machinery cooling. Total average flow for recycled water use has increased significantly in recent years, with a peak annual average usage of approximately 20 mgd in 2008. This Order also regulates the recycled water use within the Discharger's service area.

Recycled water from RP-1 and RP- 4 is also used for groundwater recharge in areas overlying the Chino North Groundwater Management Zone. This groundwater recharge is regulated under a separate Order (Order No. R8-2007-0039). Order No. R8-2007-0039 was issued to the Discharger and the Chino Basin Watermaster to regulate the use of recycled water for the Chino Basin Recycled Water Groundwater Recharge Project, Phase I and Phase II. Order No. R8-2009-0021 does not regulate the use of recycled water for groundwater recharge.

## B. Discharge Points and Receiving Waters

### 1. Discharge Points to Surface Water

Tertiary treated wastewater from each of the four Facilities is discharged at different Discharge Points (DPs 001, 002, 003, & 004) to surface waters that include Reaches 1A, 1B and 2 of Chino Creek, Reach 1 of Cucamonga Creek, and Prado Park Lake. These waterbodies are tributary to Reach 3 of the Santa Ana River within the Prado Basin Management Zone.

### 2. Stormwater Discharge points

Stormwater flows generated on site at RP-1 are collected and pumped to a liquid process stream for treatment. In the event that stormwater flows exceed the capacity to store and/or pump to a liquid process stream, stormwater may enter Reach 1 of Cucamonga Creek via S-001 or S-002.

Stormwater flows generated on site at RP- 4 are fully contained in an onsite, 4 million gallon capacity storage basin. All water captured in this basin is then pumped to a liquid process stream for treatment.

Stormwater flows generated on site at RP-5 and CCWRF plant are collected and pumped to the liquid process stream for treatment.

**3. Recycled Water Use Area**

Recycled water for irrigation is delivered to IEUA's service area through Discharge Points (DP) 005 through DP 008.

**4. Receiving Water**

**Surface water.** Tertiary treated wastewater discharges from the Facilities are either into Reaches 1A, 1B and 2 of Chino Creek, Reach 1 of Cucamonga Creek, and Prado Park Lake, tributaries of Reach 3 of the Santa Ana River within the Prado Basin Management Zone (PBMZ).

**Groundwater.** The Discharger distributes recycled water throughout its service area. The current recycled water use area overlies the Chino North "Maximum Benefit" Groundwater Management Zone (or Chino 1, 2, and 3 "Antidegradation" groundwater management zones).

There is little or no groundwater storage within the PBMZ.

Table 5 shows a summary of the discharge points, discharge coordinates (longitude and latitude), affected receiving waters, and estimated volume of discharge:

**Table 5. Summary of Discharge Points and Receiving Waters**

| Discharge Point | Latitude | Longitude | Discharging Facility | Effluent Description and Receiving Water | Flow (MGD) & Frequency |
|---|---|---|---|---|---|
| 001 | N33°56'39" | W117°38'34" | RP-1 | Tertiary treated effluent into Prado Park Lake. Overflow from the lake to an unnamed creek, then to Reach 1A of Chino Creek, a tributary to Reach 3 of Santa Ana River in Prado Basin | 6.6 mgd 3-year average Continuous discharge |
| 002 | N34°1'31" | W117°33'56" | RP-1 & RP-4 | Reach 1 of Cucamonga Creek, then to Mill Creek, then Reach 1A of Chino Creek, a tributary to Reach 3 of Santa Ana River in Prado Basin | 20.6 mgd 3-year average Continuous discharge |
| 003 | N33°57'44" | W117°40'41" | RP-5 | Reach 1B of Chino Creek, a tributary to Reach 3 of Santa Ana River | 10.2 mgd 3-year average Continuous discharge |
| 004 | N33°58'56 | W117°41'48" | CCWRF | Reach 2 of Chino Creek, a tributary to Reach 3 of Santa Ana River | 9.9 mgd 3-year average Continuous discharge |

**Table 5. Summary of Discharge Points and Receiving Waters**

| Discharge Point | Latitude | Longitude | Discharging Facility | Effluent Description and Receiving Water | Flow (MGD) & Frequency |
|---|---|---|---|---|---|
| 005 | N34°01'29" | W117°35'57" | RP-1 | Recycled water use in areas overlying Chino North "Max Benefit" GMZ | 14.1 mgd 1-year average - intermittent |
| 006 | N34°04'59" | W117°31'35" | RP-4 | Recycled water use in areas overlying Chino North "Max Benefit" GMZ | 3.1 mgd 1-year average (2007) - intermittent |
| 007 | N33°57'51" | W117°40'24" | RP-5 | Recycled water use in areas overlying Chino North "Max Benefit" GMZ | 1.0 MGD 1-year average - intermittent |
| 008 | N33°58'47" | W117°41'37" | CCWRF | Recycled water use in areas overlying Chino North "Max Benefit" GMZ | 2.8 mgd 1-year average - intermittent |
| S-001 | N34°01'36" | W117°35'59" | RP-1 | Stormwater runoff to Reach 1 of Cucamonga Creek | Varies during storm event |
| S-002 | N34°01'28" | W117°35'58" | RP-1 | Stormwater runoff to Reach 1 of Cucamonga Creek | Varies during storm event |

## C. Summary of Previous Requirements and Self-Monitoring Report (SMR) Data

1. Effluent Limitations/Discharge Specifications contained in the previous Order No. R8-2006-0010 for discharges from RP-1 & RP-4 at Discharge Point 001 and DP002 and representative monitoring data from the term of the previous Order are as follows:

**Table 6. RP-1 Historic Effluent Limitations and Monitoring Data at M-001A and M-001B**

| Parameter (units) | Effluent Limitation | | | Monitoring Data (From Aug. 2004 to December 2008 ) | | | |
|---|---|---|---|---|---|---|---|
| | Average Monthly | Average Weekly | Maximum Daily | Highest Average Monthly Discharge | Highest Average Weekly Discharge | Highest Daily Discharge | Highest 12-Month Average |
| Flow (mgd) (Jan 06 to Dec 08) | | | | 11.1 | | 11.7 | Avg: 6.5 |
| pH Daily Average (SU) | | | Range 6.5-8.5 | | | Range 6.7-8.4 | |
| BOD5 (mg/L) | 20 | 30 | | 2 | 3 | | |
| Suspended Solids (mg/L) | 20 | 30 | | 2 | 3 | | |
| Coliform Organisms (MPN/100 mL) | 23 (1/mo.) | 2.2 | | | 2 | | |
| Ammonia-Nitrogen (mg/L) | 4.5 | | | 2.9 | | | |

## Table 6. RP-1 Historic Effluent Limitations and Monitoring Data at M-001A and M-001B

| Parameter (units) | Effluent Limitation | | | Monitoring Data (From Aug. 2004 to December 2008 ) | | | |
|---|---|---|---|---|---|---|---|
| | Average Monthly | Average Weekly | Maximum Daily | Highest Average Monthly Discharge | Highest Average Weekly Discharge | Highest Daily Discharge | Highest 12-Month Average |
| Total Residual Chlorine (mg/L) | | | 0.1 Instant. Max | | | 0.0 | |
| TDS (mg/L) | 12-M, 550 agency-wide[2] | | | 543 | | | 505 combined M-001 and M-002 |
| Total Hardness (mg/L) | | | | | 5th percentile 123 | 159 | |
| Toxicity, TUc | | | | 1.7 Reproduction | | | |
| TIN[3] (mg/L) | 12-M, 8 agency-wide | | | | | | 9.8 Note: combined RP-1 and RP-4 |
| Arsenic(µg/L) | | | | 6 | | 6 | |
| Cadmium(µg/L) | | | | <0.25 | | <0.25 | |
| Total recoverable Chromium (VI) (µg/L) | | | | 4.6 | | 4.6 | |
| Copper (µg/L) | | | | 7 | | 7 | |
| Free Cyanide (µg/L)[4] | 4.2 | | 8.5 | 24 | | 24 | |
| Lead (µg/L) | | | | <0.5 | | <0.5 | |
| Mercury (µg/L) | | | | <0.05 | | <0.05 | |
| Nickel (µg/L) | | | | 16 | | 16 | |
| Total recoverable Selenium (µg/L) | 4.1 | | 8.2 | 7 | | 7 | |
| Silver (µg/L) | | | | 0.7 | | 0.7 | |
| Zinc (µg/L) | | | | 122 | | 122 | |
| Bis(2-Ethylhexyl) Phthalate (µg/L) | 5.9 | | 11.8 | 9 | | 9 | |
| Bromodichloro Methane (µg/L) | | | | 34 | | 34 | |
| Chlorodibromo Methane (µg/L) | | | | 13 | | 13 | |
| Turbidity, NTU | | | 2 | | | >2 | |

[2] *This limitation may be met on an agency-wide basis using flow weighted averages of the discharges from all treatment plants operated by the Discharger*

[3] *Agency wide, the Discharger currently complies with the total inorganic nitrogen limitations in the Orders for RP-1, RP-4, RP-5 and CCWRF.*

[4] *Prior to January 2008, "Available cyanide" was measured rather than just "Free Cyanide". Available cyanide encompasses weak-acid dissociable cyanide compounds (that can release free cyanide) and free cyanide.*

**Table 7. RP-1 & RP-4 Historic Effluent Limitations and Monitoring Data at M-002A and M-002B**

| Parameter (units) | Effluent Limitation | | | Monitoring Data (From Aug 2004 to December 2008 ) | | | |
|---|---|---|---|---|---|---|---|
| | Average Monthly | Average Weekly | Maximum Daily | Highest Average Monthly Discharge | Highest Average Weekly Discharge | Highest Daily Discharge | Highest 12-Month Average |
| Flow (mgd) (Jan 06 to Dec 08) | | | | 28.5 | | 40.9 | Avg: 20.4 |
| pH Daily Average (SU) | | | Range 6.5-8.5 | | | Range 6.5-8.0 | |
| BOD5 (mg/L) | 20 | 30 | | 2 | 3 | | |
| Suspended Solids (mg/L) | 20 | 30 | | 5 | 12 | | |
| Coliform Organisms (MPN/100 mL) | 23 (1/mo.) | 2.2 | 240 | | 2 | | |
| Ammonia-Nitrogen (mg/L) | 4.5 | | | 3.0 | | | |
| Total Residual Chlorine (mg/L) | | | 0.1 instant. Max | | | 4.8 | |
| TDS (mg/L) | 12-M, 550 agency-wide | | | 534 | | | 505 Note: combined RP-1 and RP-4 |
| Total Hardness (mg/L) | | | | | 5th percentile 120 | 162 | |
| Toxicity, TUc | | | | 1.3 Reproduction | | | |
| TIN (mg/L) | 12-M, 8 agency-wide | | | | | | 9.8 combined M-001 and M-002 only |
| Arsenic(µg/L) | | | | 6 | | 6 | |
| Cadmium(µg/L) | | | | <0.25 | | <0.25 | |
| Total recoverable Chromium (VI) (µg/L) | | | | 4.3 | | 4.3 | |
| Copper (µg/L) | | | | 8 | | 8 | |
| Free Cyanide (µg/L)[5] | 4.2 | | 8.5 | 15 | | 15 | |
| Lead (µg/L) | | | | 5 | | 5 | |
| Mercury (µg/L) | | | | <0.05 | | <0.05 | |
| Nickel (µg/L) | | | | 4 | | 4 | |
| Total recoverable Selenium (µg/L) | 4.1 | | 8.2 | 8 | | 8 | |
| Silver (µg/L) | | | | 0.37 | | 0.37 | |
| Zinc (µg/L) | | | | 59 | | 59 | |
| Bis(2-Ethylhexyl) Phthalate (µg/L) | 5.9 | | 11.8 | 7 | | 7 | |
| Bromodichloro Methane (µg/L) | | | | 31 | | 31 | |
| Chlorodibromo Methane (µg/L) | | | | 13 | | 13 | |

[5] *Prior to January 2008, "Available" cyanide was measured rather than "Free Cyanide".*

2. Effluent limitations/Discharge Specifications contained in the previous Order No. R8-2008-0028 for discharges from RP-5 at discharge Point 003 and representative monitoring data from the term of the previous Order are as follows:

**Table 8. RP-5 Historic Effluent Limitations and Monitoring Data at M-003**

| Parameter (units) | Effluent Limitation | | | Monitoring Data (From Aug 2004 to December 2008 ) | | | |
|---|---|---|---|---|---|---|---|
| | Average Monthly | Average Weekly | Maximum Daily | Highest Average Monthly Discharge | Highest Average Weekly Discharge | Highest Daily Discharge | Highest 12-Month Average |
| Flow (mgd) (Jan 06 to Dec 08) | | | | 13.0 | | 15.4 | Avg: 10.3 |
| pH Daily Average (SU) | | | Range 6.5-8.5 | | | Range 6.5-8.1 | |
| BOD5 (mg/L) | 20 | 30 | | <2 | <3 | | |
| Suspended Solids (mg/L) | 20 | 30 | | 4 | 7 | | |
| Coliform Organisms (MPN/100 mL) | 23 (1/mo.) | 2.2 | 240 | | 2 | | |
| Ammonia-Nitrogen (mg/L) | 4.5 | | | 0.4 | | | |
| Total Residual Chlorine (mg/L) | | | 0.1 Instant. Max. | | | 0.0 | |
| TDS (mg/L) | 12-M, 550 agency-wide | | | 557 | | | 533 |
| Total Hardness (mg/L) | | | | | 5th percentile 148 | 215 | |
| Toxicity, TUc | | | | >1.7 Reproduction | | | |
| TIN (mg/L) | 12-M, 8 agency-wide | | | | | | 6.5 |
| Arsenic (µg/L) | | | | 7 | | 7 | |
| Cadmium (µg/L) | | | | 1.7 | | 1.7 | |
| Total recoverable Chromium (VI) (µg/L) | | | | 9 | | 9 | |
| Copper (µg/L) | | | | 13 | | 13 | |
| Free Cyanide (µg/L) [6] | 4.6 | | 7.3 | 8 | | 8 | |
| Lead (µg/L) | | | | 3 | | 3 | |
| Mercury (µg/L) | | | | <0.05 | | <0.05 | |
| Nickel (µg/L) | | | | 7 | | 7 | |
| Total recoverable Selenium (µg/L) | | | | 3 | | 3 | |
| Silver (µg/L) | | | | 0.5 | | 0.5 | |
| Zinc (µg/L) | | | | 69 | | 69 | |
| Bis(2-Ethylhexyl) Phthalate (µg/L) | | | | 3 | | 3 | |
| Bromodichloro Methane (µg/L) | | | | 48 | | 48 | |
| Chlorodibromo Methane (µg/L) | | | | 21 | | 21 | |

[6] *Prior to January 2008, "Available cyanide" was measured rather than "Free Cyanide".*

**Table 8. RP-5 Historic Effluent Limitations and Monitoring Data at M-003**

| Parameter (units) | Effluent Limitation | | | Monitoring Data (From Aug 2004 to December 2008 ) | | | |
|---|---|---|---|---|---|---|---|
| | Average Monthly | Average Weekly | Maximum Daily | Highest Average Monthly Discharge | Highest Average Weekly Discharge | Highest Daily Discharge | Highest 12-Month Average |
| 2,3,7,8-TCDD (Dioxin), (µg/L) | | | | | | 0.0000035 | |

3. Effluent limitations/Discharge Specifications contained in the previous Order No. R8-2004-0020 for discharges from CCWRF at Discharge Point 004 and representative monitoring data from the term of the previous Order are as follows:

**Table 9. CCWRF Historic Effluent Limitations and Monitoring Data at M-004**

| Parameter (units) | Effluent Limitation | | | Monitoring Data (From Aug 2004 to December 2008 ) | | | |
|---|---|---|---|---|---|---|---|
| | Average Monthly | Average Weekly | Maximum Daily | Highest Average Monthly Discharge | Highest Average Weekly Discharge | Highest Daily Discharge | Highest 12-Month Average |
| Flow (mgd) (Jan 06 to Dec 08) | 11.4 | | | 10.0 | | 13.2 | Avg: 6.9 |
| pH Daily Average (SU) | | | Range 6.5-8.5 | | | Range 6.6-7.7 | |
| BOD5 (mg/L) | 20 | 30 | | 2 | 3 | | |
| Suspended Solids (mg/L) | 20 | 30 | | 2 | 8 | | |
| Coliform Organisms (MPN/100 mL) | 23 (1/mo.) | 2.2 | 240 | | 2 | | |
| Ammonia-Nitrogen (mg/L) | 4.5 | | | 0.2 | | | |
| Total Residual Chlorine (mg/L) | | | 0.1 instant. Max | | | 0.0 | |
| TDS (mg/L) | 12M, 550 agency-wide | | | 554 | | | 537 |
| Total Hardness (mg/L) | | | | | 5th percentile 130 | | |
| Toxicity, TUc | | | | 1.7 Reproduction | | | |
| TIN (mg/L) | 12M, 8 | | | | | | 7.5 |
| Arsenic(µg/L) | | | | 7 | | 7 | |
| Cadmium(µg/L) | | | | <0.25 | | <0.25 | |
| Total recoverable Chromium (VI) (µg/L) | 8.2 | | 16.3 | 4.1 | | 4.1 | |
| Copper (µg/L) | | | | 12 | | 12 | |

**Table 9. CCWRF Historic Effluent Limitations and Monitoring Data at M-004**

| Parameter (units) | Effluent Limitation | | | Monitoring Data (From Aug 2004 to December 2008 ) | | | |
|---|---|---|---|---|---|---|---|
| | Average Monthly | Average Weekly | Maximum Daily | Highest Average Monthly Discharge | Highest Average Weekly Discharge | Highest Daily Discharge | Highest 12-Month Average |
| Free Cyanide (µg/L)[7] | 4.1 | | 8.2 | 8 | | 8 | |
| Lead (µg/L) | | | | 0.5 | | 0.5 | |
| Mercury (µg/L) | | | | <0.05 | | <0.05 | |
| Nickel (µg/L) | | | | 20 | | 20 | |
| Total recoverable Selenium (µg/L) | 4.1 | | 8.2 | <2 | | <2 | |
| Silver (µg/L) | | | | 0.9 | | 0.9 | |
| Zinc (µg/L) | | | | 57 | | 57 | |
| Bis(2-Ethylhexyl) Phthalate(µg/L) | 5.9 | | 11.8 | 25 | | 25 | |
| Bromodichloro Methane (µg/L) | | | | 33 | | 33 | |
| Chlorodibromo Methane (µg/L) | | | | 10 | | 10 | |
| 2,3,7,8-TCDD (Dioxin) (µg/L) | | | | | | 0.00000026 | |

## D. Compliance Summary

Based on a review of effluent monitoring data submitted by the Discharger for the period from 2004 through 2008, the following Table shows the compliance summary for each Facility:

**Table 10. Compliance Status RP-1, RP-5 and CCWRF**

| Date | Plant | Parameter | Value | Permit Limit | Reason for Violation | Corrective Measures |
|---|---|---|---|---|---|---|
| 01/02/04 | RP-1 (001) | Chlorine Residual | 4.6 mg/L | 0.1mg/L | Sodium Bisulfite (SBS) crystallized due to low temps | Heat tape installed to the SBS piping distribution system to prevent crystallization of SBS in the line |
| 10/17/04 | RP-1 (001) | Chlorine Residual | 6.5 mg/L | 0.1mg/L or not exceed 5 mg/L | Dechlor Station power failure | Monthly standby generator testing and automated V-1 valve closure |
| 03/14/05 | RP-1 (001) | Turbidity | >2 NTU | 2 NTU | Plant upset, unstable | Placed train back into service, reseeded one |

[7] *Prior to January 2008, "Available cyanide" was measured rather than Free Cyanide.*

## Table 10. Compliance Status RP-1, RP-5 and CCWRF

| Date | Plant | Parameter | Value | Permit Limit | Reason for Violation | Corrective Measures |
|---|---|---|---|---|---|---|
| 03/14/05 - 03/16/05 | RP-1 (002) | Turbidity | >2 NTU | 2 NTU, 5 NTU 5% | activated sludge system , and one activated sludge train was in repair | activated sludge system, polymer addition, chlorinated RAS. |
| 07/24/06 | RP-1 (002) | Chlorine Residual | 4.8 mg/L | 0.1mg/L | Stage 2 Power Alert. Standby generator at pump stations and Dechlor stn power failure | Preventative maintenance procedures reviewed, revised, and implemented. |
| 10/01/06 | RP-1 (002) | Coliform | 900 MPN/100 mL | 240 MPN/ 100mL | Sample contamination | Staff retrained in sample collection and handling techniques |
| 09/05/07 | RP-1 (001) | Coliform | 500 MPN/100 mL | 240 MPN/ 100mL | Sample contamination | Staff retrained in sample collection and handling techniques |
| 11/22/07 | RP-1 (002) | Coliform | >1600 MPN/100 mL | 240 MPN/ 100mL | Metal tip at sampling point contaminated sample | Discontinued use of metal tip at sampling point |
| 03/06/07 | CCWRF | Bis(2-ethylhexyl phthalate | 25 µg/L | 5.9 µg/L avg; 11.8 µg/L max | Sample contamination | Compound commonly used in the manufacturing of plastics. Influent concentration was “non-detect” |
| 01/04/05 | RP-5 | Chlorine Residual | 5.29 mg/L | 0.1mg/L or not exceed 5 mg/L | Sodium Bisulfite (SBS) crystallized due to low temps | Heat tape installed to the SBS piping distribution system to prevent crystallization of SBS in the line. |
| 01/09/05 | RP-5 | Chlorine Residual | >5.0 mg/L | 0.1mg/L or not exceed 5 mg/L | Control analyzer failure | Allow effluent gate to close automatically as designed. |

## E. Planned Changes – Not Applicable

## III. APPLICABLE PLANS, POLICIES, AND REGULATIONS

### A. Legal Authorities

This Order is issued pursuant to section 402 of the federal Clean Water Act (CWA) and implementing regulations adopted by the U.S. Environmental Protection Agency (USEPA) and Chapter 5.5, Division 7 of the California Water Code (commencing with Section 13370). It shall serve as a NPDES permit for point source discharges from the Regional Water Recycling Facilities to surface waters. This Order also serves as Waste Discharge Requirements (WDRs) pursuant to article 4, Chapter 4, Division 7 of the Water Code (commencing with Section 13260). This Order also includes Producer/User Recycling Requirements to regulate recycled water use for irrigation and other industrial uses.

### B. California Environmental Quality Act (CEQA)

Under Water Code section 13389, this action to adopt an NPDES permit is exempt from the provisions of CEQA, Public Resources Code section 21000 et seq. (*County of Los Angeles v. California State Water Resources Control Board* (2006) 143 Cal.App.4th 985, mod. (Nov. 6, 2006, B184034) 50 Cal.Rptr.3d 619, 632-636.)

This action also involves the re-issuance of waste discharge requirements for an existing Facility that discharges treated wastewater to land and as such, is exempt from the provisions of California Environmental Quality Act (commencing with Section 21100) in that the activity is exempt pursuant to Title 14 of the California Code of Regulations Section 15301.

### C. State and Federal Regulations, Policies, and Plans

1. **Water Quality Control Plans.** The Regional Water Board adopted an updated Water Quality Control Plan for the Santa Ana Basin (hereinafter Basin Plan) that became effective on January 24, 1995. The Basin Plan designates beneficial uses, establishes water quality objectives, and contains implementation programs and policies to achieve those objectives for all waters addressed through the plan. In addition, State Water Resources Control Board (State Water Board) Resolution No. 88-63 (Sources of Drinking Water Policy) requires that, with certain exceptions, the Regional Water Board assign the municipal and domestic water supply use to water bodies. Based on the exception criteria specified in Resolution No. 88-63, the Regional Water Board excepted certain waters from the municipal and domestic supply beneficial use.

   On January 22, 2004, the Regional Water Board adopted Resolution No. R8-2004-0001, amending the Basin Plan to incorporate revised boundaries for groundwater subbasins, now termed “management zones”, new nitrate-nitrogen and TDS objectives for the new management zones, and new nitrogen and TDS management strategies applicable to both surface and ground waters. The State Water Board and Office of Administrative Law (OAL) approved the N/TDS

Amendment on September 30, 2004 and December 23, 2004, respectively. EPA approved the surface water standards components of the N/TDS Amendment on June 20, 2007. Effluent limitations in this Order for TDS and TIN discharges to Chino Creek, Reach 1 of Cucamonga Creek, Prado Park Lake, and Reach 3 of the Santa Ana River are based on applicable wasteload allocations specified in the Basin Plan as amended.

The designated beneficial uses of receiving waters affected by the discharge from the Facility are as follows:

**Table 11. Basin Plan Beneficial Uses**

| Discharge Point | Receiving Water | Beneficial Uses |
|---|---|---|
| 001 | Prado Park Lake, overflow from the lake to an unnamed creek, then to Reach 1A of Chino Creek | Present or Potential:<br>Water contact recreation (REC-1), non-contact water recreation (REC-2), warm freshwater habitat, wildlife habitat (WILD), and rare, threatened and endangered species.<br><br>Recreational use at Prado Park Lake is restricted to fishing and boating.<br><br>Excepted from Municipal and Domestic Supply. |
| 002 | Reach 1 of Cucamonga Creek, to Mill Creek, then Reach 1A of Chino Creek | Present or Potential:<br>Groundwater Recharge, Water contact recreation (REC-1), non-contact water recreation (REC-2), Limited warm freshwater habitat, and wildlife habitat (WILD).<br>Excepted from Municipal and Domestic Supply. |
| 003 | Reach 1B of Chino Creek | Present or Potential:<br>Water contact recreation (REC-1), non-contact water recreation (REC-2), warm freshwater habitat, wildlife habitat (WILD), and rare, threatened and endangered species.<br>Excepted from Municipal and Domestic Supply. |
| 004 | Reach 2 of Chino Creek | Present or Potential:<br>Groundwater Recharge, Water contact recreation (REC-1), non-contact water recreation (REC-2), Cold freshwater habitat, and wildlife habitat (WILD).<br>Excepted from Municipal and Domestic Supply. |
| 001, 002, 003, 004, S-001, & S-002 | Reach 3 of Santa Ana River within Prado Basin Management Zone | Present or Potential:<br>Agricultural supply, groundwater recharge, water contact recreation, non-contact water recreation, warm freshwater habitat, wildlife habitat, rare, threatened or endangered species, and spawning, reproduction, and development waters supporting high quality aquatic habitats.<br>Excepted from Municipal and Domestic Supply. |

**Table 11. Basin Plan Beneficial Uses**

| Discharge Point | Receiving Water | Beneficial Uses |
|---|---|---|
| 001, 002, 003, 004, 005, 006, 007, 008, S-001, & S-002 | Chino North "Max Benefit" GMZ / Chino 1, 2 and 3 "antidegradation" GMZs | Present or Potential:<br>Municipal and domestic supply, agricultural supply, industrial service supply, and industrial process supply. |
| | Orange GMZ (affected GMZ downstream of discharge points) | Present or Potential:<br>Municipal and domestic supply, agricultural supply, industrial service supply, and industrial process supply. |

Requirements of this Order implement the Basin Plan.

2. **National Toxics Rule (NTR) and California Toxics Rule (CTR).** USEPA adopted the NTR on December 22, 1992, and later amended it on May 4, 1995 and November 9, 1999. About forty criteria in the NTR applied in California. On May 18, 2000, USEPA adopted the CTR. The CTR promulgated new toxics criteria for California and, in addition, incorporated the previously adopted NTR criteria that were applicable in the state. The CTR was amended on February 13, 2001. These rules contain water quality criteria for priority pollutants.

3. **State Implementation Policy.** On March 2, 2000, the State Water Board adopted the *Policy for Implementation of Toxics Standards for Inland Surface Waters, Enclosed Bays, and Estuaries of California* (State Implementation Policy or SIP). The SIP became effective on April 28, 2000 with respect to the priority pollutant criteria promulgated for California by the USEPA through the NTR and to the priority pollutant objectives established by the Regional Water Board in the Basin Plan. The SIP became effective on May 18, 2000 with respect to the priority pollutant criteria promulgated by the USEPA through the CTR. The State Water Board adopted amendments to the SIP on February 24, 2005 that became effective on July 13, 2005. The SIP establishes implementation provisions for priority pollutant criteria and objectives and provisions for chronic toxicity control. Requirements of this Order implement the SIP.

4. **Alaska Rule.** On March 30, 2000, USEPA revised its regulation that specifies when new and revised state and tribal water quality standards (WQS) become effective for CWA purposes (40 C.F.R. § 131.21, 65 Fed. Reg. 24641 (April 27, 2000)). Under the revised regulation (also known as the Alaska rule), new and revised standards submitted to USEPA after May 30, 2000, must be approved by USEPA before being used for CWA purposes. The final rule also provides that standards already in effect and submitted to USEPA by May 30, 2000, may be used for CWA purposes, whether or not approved by USEPA.

5. **Antidegradation Policy.** 40 CFR § 131.12 requires that the state water quality standards include an antidegradation policy consistent with the federal policy. The State Water Board established California's antidegradation policy in State Water Board Resolution No. 68-16. Resolution No. 68-16 incorporates the federal antidegradation policy where the federal policy applies under federal law. Resolution No. 68-16 requires that existing water quality be maintained unless degradation is justified based on specific findings. The Regional Water Board's Basin Plan implements, and incorporates by reference, both the State and federal antidegradation policies. As discussed in Section IV. E. 2 of this Fact Sheet, the permitted discharges are consistent with the antidegradation provisions of § 131.12 and State Water Board Resolution No. 68-16.

6. **Anti-Backsliding Requirements.** Sections 402(o)(2) and 303(d)(4) of the CWA and federal regulations at title 40, Code of Federal Regulations[8] section 122.44(l) prohibit backsliding in NPDES permits. These anti-backsliding provisions require that effluent limitations in a reissued permit must be as stringent as those in the previous permit, with some exceptions in which limitations may be relaxed. All effluent limitations in the Order are at least as stringent as the effluent limitations in the previous Orders for each Facility.

7. **Monitoring and Reporting Requirements.** Section 122.48 of 40 CFR requires that all NPDES permits specify requirements for recording and reporting monitoring results. Sections 13267 and 13383 of the CWC authorize the Regional Water Board to require technical and monitoring reports. The Monitoring and Reporting Program (MRP) establishes monitoring and reporting requirements to implement federal and State requirements. This MRP is provided in Attachment E.

## D. Impaired Water Bodies on CWA 303(d) List

Reach 1 of Chino Creek, Mill Creek (Prado Area) and Prado Park Lake are included in the USEPA approved 2006 CWA 303(d) list due to nutrients resulting principally from agricultural and dairy operations inputs during storm events. Reaches 1 & 2 of Mill Creek are also listed due to pathogen indicators, also resulting principally from dairy operations inputs during storm events. This Order requires that the wastewater discharged from the Facilities be essentially free of pathogens/pathogen indicators and that the wastewaters comply with the applicable Basin Plan wasteload allocation for total inorganic nitrogen (8 mg/L) for surface water discharges.

## E. Other Plans, Polices and Regulations-Not Applicable

[8] *All further statutory references are to title 40 of the Code of Federal Regulations unless otherwise indicated.*

# IV. RATIONALE FOR EFFLUENT LIMITATIONS AND DISCHARGE SPECIFICATIONS

The CWA requires point source Dischargers to control the amount of conventional, non-conventional, and toxic pollutants that are discharged into the waters of the United States. The control of pollutants discharged is established through effluent limitations and other requirements in NPDES permits. There are two principal bases for effluent limitations in the Code of Federal Regulations: section 122.44(a) requires that permits include applicable technology-based limitations and standards; and section 122.44(d) requires that permits include water quality-based effluent limitations to attain and maintain applicable numeric and narrative water quality criteria to protect the beneficial uses of the receiving water

## A. Discharge Prohibitions

The discharge prohibitions are based on the Federal Clean Water Act, Basin Plan, State Water Board's plans and policies, U.S. Environmental Protection Agency guidance and regulations, and previous permit provisions in Orders No. R8-2006-0010, R8-2008-0028, and R8-2004-0020 and are consistent with the requirements set for other discharges regulated by NPDES permits adopted by the Regional Water Board.

## B. Technology-Based Effluent Limitations

### 1. Scope and Authority

Section 301(b) of the CWA and implementing USEPA permit regulations at section 122.44, title 40 of the Code of Federal Regulations, require that permits include conditions meeting applicable technology-based requirements at a minimum, and any more stringent effluent limitations necessary to meet applicable water quality standards. The discharge authorized by this Order must meet minimum federal technology-based requirements based on Secondary Treatment Standards at Part 133 and/or Best Professional Judgment (BPJ) in accordance with Part 125, section 125.3.

Regulations promulgated in 40 CFR §125.3(a)(1) require technology-based effluent limitations for municipal dischargers to be placed in waste discharge requirements based on Secondary Treatment Standards or Equivalent to Secondary Treatment Standards.

The Federal Water Pollution Control Act Amendments of 1972 (PL 92-500) established the minimum performance requirements for POTWs [defined in Section 304(d)(1)]. Section 301(b)(1)(B) of that Act requires that such treatment works must, as a minimum, meet effluent limitations based on secondary treatment as defined by the USEPA Administrator.

Based on this statutory requirement, USEPA developed secondary treatment regulations, which are specified in 40 CFR Part 133. These technology-based regulations apply to all municipal wastewater treatment plants and identify the minimum level of effluent quality attainable by secondary treatment in terms of biochemical oxygen demand ($BOD_5$), total suspended solids (TSS), and pH.

### 2. Applicable Technology-Based Effluent Limitations for 20:1 dilution

This Facility meets the technology-based regulations for the minimum level of effluent quality attainable by secondary treatment in terms of $BOD_5$, total suspended solids and removal rate as summarized in the Table below. These effluent limitations have been set for secondary treated wastewater discharges at Discharge Points (DPs) 002, 003, and 004 under 20:1 dilution conditions.

**Table 12. Summary of Technology-Based Effluent Limits for Secondary Treatment**

| Constituent | Average Weekly (mg/L) | Average Monthly (mg/L) | Average Monthly Removal Rate % |
|---|---|---|---|
| Biochemical Oxygen Demand, 5-day $20^0$C | 45 | 30 | 85 |
| Total Suspended Solids | 45 | 30 | 85 |

DP 001 discharges to Prado Park Lake. This lake is a property of the County of San Bernardino. The County and the Discharger agreed that the Discharger will provide up to 6.6 mgd of tertiary treated recycled water to the lake for recreation and fishing. There are no other discharges into the lake except stormwater from the tributary drainage area. Overflow from this lake discharges continuously to an unnamed creek, then to Reach 1A of Chino Creek. Consequently, discharges of secondary treated wastewater under 20:1 dilution condition into the lake is not allowed.

## C. WQBEL-Based Effluent Limitations for DP 001 through DP 004

### 1. Scope and Authority

Section 301(b) of the CWA and section 122.44(d) require that permits include limitations more stringent than applicable federal technology-based requirements where necessary to achieve applicable water quality standards.

Section 122.44(d)(1)(i) mandates that permits include effluent limitations for all pollutants that are or may be discharged at levels that have the reasonable potential to cause or contribute to an exceedance of a water quality standard, including numeric and narrative objectives within a standard. Where reasonable potential has been established for a pollutant, but there is no numeric criterion or objective for the

pollutant, water quality-based effluent limitations (WQBELs) must be established using: (1) USEPA criteria guidance under CWA section 304(a), supplemented where necessary by other relevant information; (2) an indicator parameter for the pollutant of concern; or (3) a calculated numeric water quality criterion, such as a proposed state criterion or policy interpreting the state's narrative criterion, supplemented with other relevant information, as provided in section 122.44(d)(1)(vi).

The process for determining reasonable potential and calculating WQBELs when necessary is intended to protect the designated uses of the receiving water as specified in the Basin Plan, and achieve applicable water quality objectives and criteria that are contained in other state plans and policies, or any applicable water quality criteria contained in the CTR and NTR.

**2. Applicable Beneficial Uses and Water Quality Criteria and Objectives**

**a. The Basin Plan** specifies narrative and numeric water quality objectives applicable to surface water as follows.

**Table 13. Applicable Basin Plan Surface Water Quality Objectives**

| Constituents | Basis for Limitations |
|---|---|
| Ammonia Nitrogen | Dissociates under certain conditions to the toxic un-ionized form. Thus, nitrogen discharges to surface water pose a threat to aquatic life and instream beneficial uses, as well as to the beneficial uses of affected groundwater. The Basin Plan specifies total ammonia and un-ionized ammonia objectives and an effluent limit of 4.5 mg/L for discharges to surface waters--Chino Creek and Mill Creek. |
| Hydrogen Ion (pH) | Hydrogen Ion (pH) is a measure of Hydrogen Ion concentration in the water. A pH range of 6.5 to 8.5 for surface water discharges is specified. |
| Oil & Grease | Oil and related materials have a high surface tension and are not soluble in water, resulting in odors and visual impacts. |
| Total Dissolved Solids | High levels of TDS can adversely impact groundwater affected by recharge of the affected receiving waters, as well as the use of that groundwater for supply purposes. The TDS limit for surface water discharges is based on the amended Basin Plan wasteload allocation for the discharger of 550 mg/L[9] and 80 mgd flow. |
| Total Inorganic Nitrogen | Nitrogen discharges to the Santa Ana River pose a threat to aquatic life and instream beneficial uses, as well as to the beneficial uses of affected groundwater. The TIN limit for surface water discharges is based on the amended Basin Plan wasteload allocation of 8.0 mg/L and 80 mgd flow . |
| Total Chlorine Residual | Wastewater disinfection with chlorine usually produces chlorine residual. Chlorine and its reaction products are toxic to aquatic life.<br>To protect aquatic life, the chlorine residual in wastewater discharged to inland surface waters shall not exceed 0.1 mg/L. |

9 *The Basin Plan specifies in Table 5-5 that TDS and TIN discharges to surface waters from the Discharger's wastewater treatment facilities are to be regulated pursuant to a single wasteload allocation, applied as a flow-weighted average of the discharges from the facilities. The TDS and TIN wasteload allocations are not contingent on "maximum benefit" objectives or implementation.*

(1) TDS and TIN: TDS and TIN limitations are specified in the Order for discharges of tertiary treated effluent at DPs 001, 002, 003, and 004. These TDS/TIN limits are based on the waste load allocation specified in Table 5-5 of the amended Basin Plan.

(2) TDS: This Order also includes a TDS limit based on the flow weighted running average quality of the water supplied to the service area plus a reasonable use increment of 250 mg/L. This reasonable use increment addition is discussed and authorized in the Basin Plan.

(3) For surface water discharges, the more restrictive of the TDS limit based on the wasteload allocation or the TDS limit based on water supply quality plus the reasonable use increment applies to discharges from the Facilities.

(4) In accordance with 40 CFR Section 122.45(d), there may be instances in which the basis for a limit for a particular continuous discharge may be impracticable to be stated as a maximum daily, average weekly, or average monthly effluent limitation. The Regional Water Board has determined that it is not practicable to express TDS and TIN effluent limitations as average weekly and average monthly effluent limitations because the TDS and TIN objectives in the Basin Plan were established primarily to protect the underlying groundwater. Consequently, a 12-month average period is more appropriate.

**b. NTR, CTR and SIP**. The National Toxics Rule, California Toxics Rule (CTR) and State Implementation Policy specify numeric objectives for toxic substances and the procedures whereby these objectives are to be implemented. The procedures include those used to conduct reasonable potential analysis to determine the need for effluent limitations for priority and non-priority pollutants.

**c. Requirement to meet 2.2 total coliform bacteria limit in the effluent.** Article 3, Section 60305 of Title 22, Chapter 3, "Use of Recycled water for impoundments" of the California Code of Regulations specifies that recycled water used as a source of supply in a nonrestricted recreational impoundment shall be at all times an adequately disinfected, oxidized, coagulated, clarified, filtered wastewater (tertiary treated). The degree of treatment specified represents an approximately 5-log reduction in the virus content of the water. The California State Department of Public Health (CDPH) has determined that this degree of virus removal is necessary to protect the health of people using these impoundments for water contact recreation. The CDPH has developed wastewater disinfection guidelines ("Wastewater Disinfection for Health Protection", Department of Health Services, Sanitary Engineering Branch, February 1987) for discharges of wastewater to surface waters where water contact recreation (REC-1) is a beneficial use. The disinfection guidelines recommend the same treatment requirements for wastewater discharges to REC-1 waters as those stipulated in Title 22 for supply of recycled water to nonrestricted recreational impoundments, since the public health risks under both

scenarios are analogous. The disinfection guidelines are based on sound science and are widely used as guidance to assure public health and beneficial use protection.

None of the surface waters to which the discharges regulated under this Order occur are considered to be "nonrestricted recreational impoundments", nor is "recycled water[10]" being used as a supply source pursuant to the definitions in Title 22. However, to protect the water contact recreation beneficial use and to prevent nuisance and health risk, it is necessary and appropriate to require the same degree of treatment for wastewater discharges to the affected waterbodies as would be required for the use of recycled water in a nonrestricted recreational impoundment. Thus, this Order specifies requirements based on tertiary or equivalent treatment.

d. **Requirement to meet disinfection CT limit in the effluent**. The Board has consulted with the CDPH regarding the applicability of the process design standards (specifically filter rates, CT, and modal contact) for discharges of waste to flowing streams. CDPH has determined that although compliance with these standards is necessary to protect public health when recycled water is used, compliance with these standards is not necessary to protect public health for discharges into waterbodies that provide dilution of the wastewater, provided the performance standards are consistently met. During periods when the receiving water can provide a 1:1 dilution of the wastewater discharge, the Order provides that the specified filter rates, CT, and modal contact time do not apply to wastewater discharges to surface water. The specified filter rates, CT, and modal contact time applies to recycled water use.

### 3. Determining the Need for WQBELs

In accordance with Section 1.3 of the SIP, the Regional Water Board conducted a reasonable potential analysis (RPA) for each priority pollutant with an applicable criterion or objective to determine if a WQBEL is required in the Order. The Regional Water Board analyzed effluent data to determine if a pollutant in a discharge has the reasonable potential to cause or contribute to an excursion above a state water quality standard. For all parameters that have the reasonable potential to cause or contribute to an excursion above a water quality standard, numeric WQBELs are required. The RPA considers criteria from the CTR, and when applicable, water quality objectives specified in the Basin Plan. For hardness dependent metals, a fixed hardness value for each outfall, based on the lowest 5$^{th}$ percentile of effluent hardness measurements from each plant, is used to facilitate the determination of compliance. The decision to use the 5$^{th}$ percentile of effluent hardness measurements is based on previous practice resulting from the Santa Ana River Use Attainability Analysis conducted in 1994 and a 2008 special study conducted by the State Water Board staff.

---

10 *As defined in the Reclamation Criteria, recycled water means water which, as a result of treatment of domestic wastewater, is suitable for a direct beneficial use or a controlled use that would not otherwise occur.*

Sufficient data are needed to conduct a complete RPA. If data are not sufficient, the Discharger will be required to gather the appropriate data for the Regional Water Board to conduct the RPA. Upon review of the data, and if the Regional Water Board determines that WQBELs are needed to protect the beneficial uses, the permit will be reopened for appropriate modification.

The RPA was performed by reviewing the data provided by the Discharger in accordance with the SIP. Total recoverable selenium, and bis(2-ethylhexyl) phthalate were determined to have reasonable potential to cause an excursion above applicable pollutant criteria or objectives for discharges at DP 001 and DP 002. For discharges at DP 003, cyanide, selenium, bis(2-ethylhexyl) phthalate, and Bromodichloromethane were determined to have reasonable potential to cause an excursion above applicable pollutant criteria or objectives. For discharges at DP 004, bis(2-ethylhexyl) phthalate was determined to have reasonable potential to cause an excursion above applicable pollutant criteria or objectives. For CCWRF, the RPA also determined that total recoverable chromium (VI) does not have the reasonable potential to cause an excursion above applicable pollutant criteria or objectives. Consequently, effluent limitations for this constituent are not included in this Order.

The December 2007 monitoring data for 2,3,7,8-TCDD (Dioxin) at DP 003 and DP 004 showed one detected value each at 0.0000035 µg/L and 0.00000026 µg/L, respectively. These values are above the water quality criteria for Dioxin. However, the prior monitoring results before detection showed non-detect values and subsequent to detection, three monitoring data for each outfall also showed non-detect values. Considering the previous and subsequent monitoring results, it is determined that there is no reasonable potential for Dioxin to exceed applicable pollutant criteria. Consequently, no effluent limitation for Dioxin is included in the Order. However, the Order requires the Discharger to conduct quarterly monitoring for Dioxin for one year. The monitoring frequency is reduced to semi-annual if quarterly monitoring results show non-detect values at acceptable reporting levels.

For free cyanide, the RPA was based on the previous RPA that was done for each facility because the EPA approved test method for free cyanide is in question and the Discharger is using a test method that is currently being verified for accuracy and repeatability. This test method will be submitted to EPA for approval. Meanwhile, this Order retains the current effluent limits for free cyanide for RP-1, RP-4, RP-5 and CCWRF.

The following tables show the RPA study results for each Facility. Effluent limitations are established in this Order for those parameters with “yes” in the RPA column of the tables.

**Table 14. RP-1 - Comparing DP 001 Effluent Data with WQOs**

| Parameter | unit | Effluent MEC[11] | CTR-Fresh water | | | Basin Plan | RPA |
|---|---|---|---|---|---|---|---|
| | | Fresh water | CMC/CCC | WQO | Human Health Organisms Only | WQO | |
| Cyanide, Free | µg/L | 24 | 22/5.2 | | | | yes |
| Bis(2-ethylhexyl) Phthalate | µg/L | 9 | | | 5.9 | | yes |
| Total recoverable selenium | µg/L | 7.0 | 0/5.0 | | | | yes |

*: 5th percentile of effluent hardness of 124 mg/l is used to calculate metals criteria with hardness related.

**Table 15. RP-1 & RP-4 - Comparing DP 001 & DP 002 Effluent Data with WQOs**

| Parameter | unit | Effluent MEC | CTR-Fresh water | | | Basin Plan | RPA |
|---|---|---|---|---|---|---|---|
| | | Fresh water | CMC/CCC | WQO | Human Health | WQO | |
| Cyanide, Free | µg/L | 15 | 22/5.2 | | | | yes |
| Bis(2-ethylhexyl) Phthalate | µg/L | 7 | | | 5.9 | | yes |
| Total recoverable selenium | µg/L | 8.0 | 0/5.0 | | | | yes |

*: 5th percentile of effluent hardness of 122 mg/l is used to calculate metals criteria with hardness related.

**Table 16. RP-5 - Comparing DP 003 Effluent Data with WQOs**

| Parameter | unit | Effluent MEC | CTR-Fresh water | | | Basin Plan | RPA |
|---|---|---|---|---|---|---|---|
| | | Fresh water | CMC/CCC | WQO | Human Health | WQO | |
| Cyanide, Free | µg/L | 8 | 22/5.2 | | | | yes |
| Bis(2-ethylhexyl) Phthalate | µg/L | 4 | | | 5.9 | | no |
| Total recoverable Selenium | µg/L | 3 | 0/5.0 | | | | No |
| 2,3,7,8-TCDD (Dioxin) | µg/L | 0.0000035 | | | 0.000000014 | | No, see Section IV.C.3., above |
| Bromodichloromethane | µg/L | 48 | | | 46 | | yes |

*: 5th percentile of effluent hardness of 148 mg/l is used to calculate metals criteria with hardness related.

[11] *MEC, CMC, CCC are defined in Attachment A.*

**Table 17. CCWRF - Comparing DP 004 Effluent Data with WQOs**

| Parameter | unit | Effluent MEC | CTR-Fresh water | | | Basin Plan | RPA |
|---|---|---|---|---|---|---|---|
| | | Fresh water | CMC/CCC | WQO | Human Health | WQO | |
| Cyanide, Free | µg/L | 8 | 22/5.2 | | | | yes |
| Bis(2-ethylhexyl) Phthalate | µg/L | 25 | | | 5.9 | | yes |
| Total recoverable chromium (VI) | µg/L | 4.1 | 16/11 | | | | No |
| Total recoverable Selenium | µg/L | <2 | 0/5.0 | | | | No |
| 2,3,7,8-TCDD (Dioxin) | µg/L | 0.00000026 | | | 0.000000014 | | No, see Section IV.C.3., above |

*: 5th percentile of effluent hardness of 130 mg/l is used to calculate metals criteria with hardness related.

## 4. WQBEL Calculations

No mixing zone allowance is included in the calculation of effluent limits in this Order. Consequently, compliance with the effluent limits is required to be determined at the end of the discharge pipe for freshwater discharge.

a. For priority pollutants, water quality based effluent limits based on monitoring results and the calculation process outlined in Section 1.4 of the California Toxic Rule and the Policy for Implementation of Toxics Standards for Inland Surface Waters, Enclosed Bays and Estuaries of California are summarized in the following Tables 19, 20 and 21. The criteria calculation is based on CTR criteria for freshwater.

The calculated coefficients of variation (CVs) for data sets of total recoverable selenium and cyanide are based on standard deviation, number of samples and mean of the data set.

This Order retains the free cyanide limits in the prior permits. The following table shows the free cyanide limits.

**Table 18. Cyanide Limits in prior Orders**

| Discharge Point | Order | Facility | Effluent Limitations, µg/L | |
|---|---|---|---|---|
| | | | Average Monthly | Maximum Daily |
| DP 001&DP 002 | R8-2006-0010 | RP-1/RP-4 | 4.2 | 8.5 |
| DP 003 | R8-2008-0028 | RP-5 | 4.6 | 7.3 |
| DP 004 | R8-2004-0020 | CCWRF | 4.3 | 8.5 |

## Table 19. Calculation of Effluent Limits at DP 001 and DP002

| | | | | CV = 0.6, long-term average | | | Aquatic Life | | Human | | Permit Limit | |
|---|---|---|---|---|---|---|---|---|---|---|---|---|
| | **CTR Criteria** | | | Acute M | Chronic M | LTA | Objective/limits | | Health Limits | | Concentration Limit | |
| | Fresh water | | Human Health | 0.321 | 0.527 | | **3.11** | **1.55** | **2.01** | | | |
| **Constituent** | CMC | CCC | | Acute LTA | Chronic LTA | | MDEL | AMEL | MDEL | AMEL | MDEL | AMEL |
| Bis(2-ethylhexyl) Phthalate | | | 5.9 | | | | | | 11.9 | 5.9 | **11.9** | **5.9** |
| Total recoverable selenium | | 5.0 | | | 2.6 | ***2.6*** | 8.2 | 4.1 | | | **8.2** | **4.1** |
| | | | | | | | | | | | | |

## Table 20. Calculation of Effluent Limits at DP 003

| | | | | | | | | | | | | |
|---|---|---|---|---|---|---|---|---|---|---|---|---|
| Bromodichloromethane | | | 46 | | | | | | 92.5 | 46.0 | **92** | **46** |

## Table 21. Calculation of Effluent Limits at DP 004

| **Constituent** | CMC | CCC | | Acute LTA | Chronic LTA | | MDEL | AMEL | MDEL | AMEL | MDEL | AMEL |
|---|---|---|---|---|---|---|---|---|---|---|---|---|
| Bis(2-ethylhexyl) Phthalate | | | 5.9 | | | | | | 11.9 | 5.9 | **11.9** | **5.9** |

### 5. Whole Effluent Toxicity (WET)

This Order does not specify WET limits but requires chronic toxicity monitoring. This Order, as in the previous Orders, also requires the Discharger to conduct the accelerated monitoring as specified in Attachment E when the result of any single chronic toxicity test of the effluent exceeds 1.0 TUc. The monitoring data for all the Facilities during the past three years (2005-2008) indicated that the monthly trigger of 1 TUc has not been exceeded.

## D. BPJ - Based Effluent Specifications for DP 001 through DP 004

For tertiary treated wastewater, the $BOD_5$ and TSS concentration limits are based on Best Professional Judgment. The technology-based secondary treatment standards specify $BOD_5$ and TSS concentration limits that are less stringent.

**Table 22. Tertiary Effluent $BOD_5$ and TSS Limits**

| Constituent | Average Weekly | Average Monthly |
|---|---|---|
| Biochemical Oxygen Demand | 30 mg/L | 20 mg/L |
| Suspended Solids | 30 mg/L | 20 mg/L |

## E. Summary of Final Effluent Limitations

### 1. Satisfaction of Anti-Backsliding Requirements

All effluent limitations in this Order are at least as stringent as the effluent limitations in previous Orders.

### 2. Satisfaction of Antidegradation Policy

The discharges addressed in this Order are existing discharges regulated under waste discharge requirements issued for each of the Facilities. This Order consolidates those requirements. The effluent limitations in this Order are at least as stringent as those specified in the prior individual waste discharge requirements. No increases in the regulated discharge flows are proposed. Therefore, discharges conducted in conformance with the requirements of this Order will not result in a lowering of water quality. The discharges therefore conform to antidegradation requirements specified in Resolution No. 68-16, which incorporates the federal antidegradation policy at 40 CFR 131.12 where, as here, is it applicable.

### 3. Stringency of Requirements for Individual Pollutants

Water quality-based effluent limitations have been scientifically derived to implement water quality objectives that protect beneficial uses. Both the beneficial uses and the water quality objectives have been approved pursuant to federal law and are the applicable federal water quality standards. To the extent that toxic pollutant water quality-based effluent limitations were derived from the CTR, the CTR is the applicable standard pursuant to section 131.38. The scientific procedures for calculating the individual water quality-based effluent limitations for priority pollutants are based on the CTR-SIP, which was approved by USEPA on May 18, 2000. Apart from certain surface water standards changes resulting from the N/TDS Basin Plan amendment that do not materially affect the quality requirements for the discharges regulated by this Order, all beneficial uses and water quality objectives contained in the Basin Plan were approved under state law and submitted to and approved by USEPA prior to May 30, 2000. Any water quality objectives and beneficial uses submitted to USEPA prior to May 30, 2000, but not approved by USEPA before that date, are nonetheless "applicable water quality standards for purposes of the CWA" pursuant to section 131.21(c)(1). Collectively, this Order's restrictions on individual pollutants are no more stringent than required to implement the requirements of the CWA.

### 4. Summary of Final Effluent Limitations

**Table 23. Summary of Water Quality-Based Effluent Limits at all DPs**

| Parameter | Units | Effluent Limitations | | | | | Basis |
|---|---|---|---|---|---|---|---|
| | | Average Monthly | Average Weekly | Max Daily | Instant. Max. | Range | |
| $BOD_5$ | mg/L | 20 | 30 | -- | -- | -- | Basin Plan |
| Total Suspended Solids | mg/L | 20 | 30 | -- | -- | -- | BP |
| pH | Std. unit | -- | -- | -- | | 6.5-8.5 | BP |
| Total Residual Chlorine | mg/L | | | | 0.1 | | BP |
| Coliform | MPN | -- | | 2.2 MPN | -- | -- | Title 22 |
| Ammonia Nitrogen | mg/L | 4.5 | | | | | BP |
| Free Cyanide | µg/L | 4.0 | | 9.2 | | | CTR |
| Bis (2-Ethylhexyl) Phthalate at DPs 001, 002, & 004 | µg/L | 5.9 | | 12 | | | CTR |
| Total recoverable selenium at DPs 001 & 002 | µg/L | | | | | | CTR |
| Bromodichloromethane At DP 003 | µg/L | 46 | | 92 | µg/L | | CTR |

## F. Interim Effluent Limitations - Not Applicable

## G. Land Discharge Specifications – Not Applicable

## H. Reclamation Specifications

1. Section 13523 of the California Water Code provides that a Regional Water Board, after consulting with and receiving the recommendations from the CDPH and any party who has requested in writing to be consulted, and after any necessary hearing, shall prescribe water reclamation requirements for water which is used or proposed to be used as recycled water, if, in the judgment of the Board, such requirements are necessary to protect the public health, safety, or welfare. Section 13523 further provides that such requirements shall include, or be in conformance with, the statewide uniform water recycling criteria established by the CDPH pursuant to California Water Code Section 13521.

2. Reclamation specifications in the proposed Order are based upon the recycling criteria contained in Title 22, Division 4, Chapter 3, Sections 60301 through 60355, California Code of Regulations, and the California Water Code Section 13521.

3. As shown in Chapter 4 of the Basin Plan as amended by the N/TDS Amendment, Resolution No. R8-2004-0001, two sets of groundwater management zones (GMZs) and respective TDS objectives have been adopted for a portion of the Chino Basin. “Maximum benefit” objectives are established for the Chino North GMZ, while “antidegradation” objectives are set for the Chino 1, 2 and 3 GMZs. Order Nos. R8-2004-0020, R8-2006-0010, and R8-2008-0028 include TDS limits for recycled water use that implement the Chino North and Chino 1, 2, and 3 TDS objectives. Provided that applicable maximum benefit commitments specified in Chapter 5 of the amended Basin Plan (and shown in Attachment J of this Order) are satisfied by the Discharger and the Chino Basin Watermaster, the TDS discharges from the combined effluent quality from the Discharger’s treatment plants will be limited to 550 mg/L. Note that the “maximum benefit” objective for the Chino North GMZ is 420 mg/L. The basis for the TDS limit of 550 mg/L is as follows. The TDS value of 550 mg/L for recycled water use was assumed as part of the development of the maximum benefit objective for the Chino North GMZ and the maximum benefit program. Implementation of that program, which entails blending of recycled water with other sources of supply (stormwater, imported State Project Water) will assure that the TDS objective of the Chino North GMZ is achieved and maintained. If the Regional Board finds that thee maximum benefit commitments are not satisfied, then the Chino 1, 2 and 3 “antidegradation” management zones and their respective TDS objectives apply. Since the Chino 1, 2 and 3 GMZs lack assimilative capacity for TDS, the TDS limits are the same as the management zone objectives.

**Table 24. TDS Limitations**

| Receiving Groundwater Management Zone | 12-Mo Average TDS Concentration, mg/L |
|---|---|
| Chino 1 | 280 |
| Chino 2 | 250 |
| Chino 3 | 260 |
| Chino – North "maximum benefit" | 550 |

4. TIN limits: When recycled water is reused for irrigation, no nitrogen limit is established for the effluent, since nitrogen is anticipated to be used by plants and will not affect water quality.

### I. Stormwater Discharge Requirements

On April 17, 1997, the State Board adopted the General Industrial Storm Water Permit, Order No. 97-03-DWQ, NPDES No. CAS000001. This General Permit implements the Final Regulations (40 CFR 122, 123, and 124) for stormwater runoff published on November 16, 1990 by EPA in compliance with Section 402(p) of the Clean Water Act (CWA). Industrial facilities, including POTW sites, are required to obtain NPDES Permits for stormwater discharges. Accordingly, this Order incorporates requirements for the discharge of stormwater from RP-1[12].

### J. Groundwater Recharge Requirements – Not Applicable

Order No. R8-2007-0039 regulates the use of recycled water from RP-1 and RP-4 for groundwater recharge.

## V. RATIONALE FOR RECEIVING WATER LIMITATIONS

### A. Surface Water

The surface water receiving water limitations in this Order are based upon the water quality objectives contained in the Basin Plan. As such, they are required part of the proposed Order.

### B. Groundwater – Not Applicable

[12] *Stormwater discharges from the Discharger's other Facilities are treated onsite (see II. B. 2, above).*

## VI. RATIONALE FOR MONITORING AND REPORTING REQUIREMENTS

Section 122.48 of 40 CFR requires all NPDES permits to specify recording and reporting of monitoring results. Sections 13267 and 13383 of the CWC authorize the Regional Water Boards to require technical and monitoring reports. The MRP, Attachment E of this Order, establishes monitoring and reporting requirements to implement federal and State requirements. The following provides the rationale for the monitoring and reporting requirements contained in the MRP for these Facilities.

### A. Influent Monitoring

This Order carries forward the treatment plant influent monitoring requirements specified in Orders No. R8-2004-0020, R8-2006-0010, and R8-2008-0028 with modifications. Influent monitoring is required to determine the effectiveness of the treatment program and assess treatment plant performance, and to implement EPA source control/pretreatment program.

### B. Effluent Monitoring

The Discharger is required to conduct monitoring of the permitted discharges in order to evaluate compliance with permit conditions. Monitoring requirements are given in the proposed monitoring and reporting program (Attachment E). This provision requires compliance with the monitoring and reporting program, and is based on 40 CFR 122.44(i), 122.62, 122.63 and 124.5. The SMP is a standard requirement in almost all NPDES permits (including the proposed Order) issued by the Regional Water Board. In addition to containing definitions of terms, it specifies general sampling/analytical protocols and the requirements of reporting of spills, violations, and routine monitoring data in accordance with NPDES regulations, the California Water Code, and Regional Water Board's policies. The monitoring and reporting program also contains sampling program specific for the Discharger's wastewater treatment plant. It defines the sampling stations and frequency, pollutants to be monitored, and additional reporting requirements. Pollutants to be monitored include all pollutants for which effluent limitations are specified. Further, in accordance with Section 1.3 of the SIP, periodic monitoring is required for all priority pollutants defined by the CTR, for which criteria apply and for which no effluent limitations have been established, to evaluate reasonable potential to cause or contribute to an excursion above a water quality standard.

This Order continues the monitoring requirements specified in the Order No. R8-2004-0020, No. R8-2006-0010, and No. R8-2008-0028, with modifications. This Order also requires the Discharger to conduct accelerated monitoring for those constituents that are detected in the annual priority pollutant scan.

## C. Whole Effluent Toxicity Testing Requirements

Whole effluent toxicity (WET) protects the receiving water quality from the aggregate toxic effect of a mixture of pollutants in the effluent. WET tests measure the degree of response of exposed aquatic test organisms to an effluent. The WET approach implements the narrative “no toxics in toxic amounts” criterion. There are two types of WET tests: acute and chronic. An acute toxicity test is conducted over a shorter time period and measures mortality. A chronic toxicity test is conducted over a longer period of time and may measure mortality, reproduction, and growth.

The Basin Plan specifies a narrative objective for toxicity, requiring that all waters be maintained free of toxic substances in concentrations that are lethal to or produce other detrimental response on aquatic organisms. Detrimental response includes but is not limited to decreased growth rate, decreased reproductive success of resident or indicator species, and/or significant alterations in population, community ecology, or receiving water biota.

In addition to the Basin Plan requirements, Section 4 of the SIP states that a chronic toxicity effluent limitation is required in permits for all discharges that will cause, have the reasonable potential to cause, or contribute to chronic toxicity in receiving waters. Therefore, in accordance with the SIP, this Order requires the Discharger to conduct chronic toxicity testing. In addition, the Order establishes thresholds that when exceeded require the Discharger to conduct accelerated toxicity testing and/or to conduct toxicity identification evaluation (TIE) studies.

This Order requires the Discharger to conduct chronic toxicity testing of the effluent from each of the Facilities on a monthly basis. The Order also requires the Discharger to conduct an Initial Investigation Toxicity Reduction Evaluation (IITRE) program when either the two-month median of toxicity test results exceeds 1 TUc or any single test exceeds 1.7 TUc for survival endpoint. Based on the results of this investigation program and at the discretion of the Executive Officer, a more rigorous Toxicity Reduction Evaluation/Toxicity Identification Evaluation (TRE/TIE) may be required. A re-opener provision is included in the Order to incorporate a chronic toxicity effluent limitation if warranted by the toxicity test results.

## D. Receiving Water Monitoring

### 1. Surface Water

Receiving water monitoring is required to determine compliance with receiving water limitations and to characterize the water quality of the receiving water. Requirements are based on the Basin Plan.

### 2. Groundwater – Not Applicable

### E. Other Monitoring Requirements

1. **Water Supply Monitoring** - The Discharger is required to collect a sample of each source of water supplied and analyze for total dissolved solids. The result of this monitoring will enable the Discharger to show compliance with TDS limitations in the Order.

2. **Biosolids Monitoring** - This Order continues the monitoring requirements specified in Order No. R8-2004-0020, No. R8-2006-0010, and No. R8-2008-0028, with modifications.

3. **Pretreatment Monitoring** - These monitoring and reporting requirements are established pursuant EPA 40 CFR 403 regulations.

## VII. RATIONALE FOR PROVISIONS

### A. Standard Provisions

Standard Provisions, which apply to all NPDES permits in accordance with section 122.41, and additional conditions applicable to specified categories of permits in accordance with section 122.42, are provided in Attachment D. The Discharger must comply with all standard provisions and with those additional conditions that are applicable under section 122.42.

Section 122.41(a)(1) and (b) through (n) establish conditions that apply to all State-issued NPDES permits. These conditions must be incorporated into the permits either expressly or by reference. If incorporated by reference, a specific citation to the regulations must be included in the Order. Section 123.25(a)(12) allows the state to omit or modify conditions to impose more stringent requirements. In accordance with section 123.25, this Order omits federal conditions that address enforcement authority specified in section0s 122.41(j)(5) and (k)(2) because the enforcement authority under the Water Code is more stringent. In lieu of these conditions, this Order incorporates by reference Water Code section 13387(e).

### B. Special Provisions

#### 1. Reopener Provisions

The provisions are based on 40 CFR Parts 122.44(c) and 123. The Regional Water Board may reopen the permit to modify permit conditions and requirements. Causes for modifications include the promulgation of new regulations, modification in sludge use or disposal practices, or adoption of new regulations by the State Water Board or Regional Water Board, including revisions to the Basin Plan.

**2. Special Studies and Additional Monitoring Requirements**

Toxicity Identification Evaluations or Toxicity Reduction Evaluations. This provision is based on the SIP, Section 4, Toxicity Control Provisions.

**3. Best Management Practices and Pollution Prevention**

Best Management Practices and Pollution Prevention - The requirements are based on the SIP Section 2.4.5.1

**4. Construction, Operation, and Maintenance Specifications**

Construction, Operation, and Maintenance Specifications - The requirements are based on requirements that were specified in prior Orders issued to the Discharger.

**5. Special Provisions for Municipal Facilities - POTWs Only**

a. Oxidized, filtered, and disinfected by UV or chlorine Wastewater Requirements: These requirements are based on Title 22 requirements for the use of recycled water.

b. Pretreatment: The system treatment plants capacity is 84.4 mgd. Consequently, this Order contains requirements for the implementation of an effective pretreatment program pursuant to Section 307 of the Federal Clean Water Act; Parts 35 and 403 of Title 40, Code of Federal Regulations (40 CFR 35 and 40 CFR 403); and/or Section 2233, Title 23, California Code of Regulations.

c. The State Water Board issued General Waste Discharge Requirements for Sanitary Sewer Systems, Water Quality Order No. 2006-0003-DWQ (General Order) on May 2, 2006. The General Order requires public agencies that own or operate sanitary sewer systems with greater than one mile of pipes or sewer lines to enroll for coverage under the General Order. The General Order requires agencies to develop sanitary sewer management plans (SSMPs) and report all sanitary sewer overflows (SSOs), among other requirements and prohibitions. The Discharger has enrolled and implemented these requirements.

   Furthermore, the General Order contains requirements for operation and maintenance of collection systems and for reporting and mitigating sanitary sewer overflows. Inasmuch as the Discharger's collection system is part of the system that is subject to this Order, Provisions section VI.C.5.a. of this Order applies. For instance, the 24-hour reporting requirements in this Order (Provisions section VI.A.2.b.) are not included in the General Order. The Discharger must comply with both the General Order and this Order. The Discharger and public agencies that are discharging wastewater into one or more of the individual facilities were required to obtain enrollment for regulation under the General Order. The Discharger and public agencies that are discharging wastewater into one or more of the individual facilities have enrolled and implemented these requirements.

d. Biosolids: On February 19, 1993, the USEPA issued a final rule for the use and disposal of sewage sludge, 40 CFR, Part 503. This rule requires that producers of sewage sludge meet certain reporting, handling, and disposal requirements. The State of California has not been delegated the authority to implement this program, therefore, the U.S. Environmental Protection Agency is the implementing agency.

**6. Other Special Provisions – Not Applicable**

**7. Compliance Schedules – Not Applicable**

## VIII. PUBLIC PARTICIPATION

The California Regional Water Quality Control Board, Santa Ana Region (Regional Water Board) is considering the issuance of waste discharge requirements (WDRs) that will serve as a National Pollutant Discharge Elimination System (NPDES) permit for Inland Empire Utilities Agency's Regional Water Recycling Facilities. As a step in the WDR adoption process, the Regional Water Board staff has developed tentative WDRs. The Regional Water Board encourages public participation in the WDR adoption process.

### A. Notification of Interested Parties

The Regional Water Board has notified the Discharger and interested agencies and persons of its intent to prescribe waste discharge requirements for the discharge and has provided them with an opportunity to submit their written comments and recommendations. Notification was provided through the posting of a Notice of Public Hearing at the Inland Empire Utilities Agency's RP-1, RP-4, RP-5, CCWRF Facilities and office, and at the Regional Water Board website http://www.waterboards.ca.gov/santaana/board_decisions/tentative_orders/index.shtml and publication in the local newspaper on June 10, 2009.

### B. Written Comments

The staff determinations are tentative. Interested persons are invited to submit written comments concerning these tentative WDRs. Comments must be submitted either in person or by mail to the Executive Officer at the Regional Water Board at the address shown below.

To be fully responded to by staff and considered by the Regional Water Board, written comments should be received at the Regional Water Board offices by 5:00 p.m. on June 19, 2009.

Jane Qiu
California Regional Water Quality Control Board
Santa Ana Region
3737 Main Street, Suite 500
Riverside, CA 92501-3348

## C. Public Hearing

The Regional Water Board will hold a public hearing on the tentative WDRs during its regular Board meeting on the following date and time and at the following location:

| | |
|---|---|
| Date: | July 10, 2009 |
| Time: | 9:00 A.M. |
| Location: | Orange County Sanitation District<br>10844 Ellis Avenue<br>Fountain Valley, CA 92708 |

Interested persons are invited to attend. At the public hearing, the Regional Water Board will hear testimony, if any, pertinent to the discharge, WDRs, and permit. Oral testimony will be heard; however, for accuracy of the record, important testimony should be in writing.

Please be aware that dates and venues may change. Our web address is http://www.waterboards.ca.gov/santaana. You can access the current agenda for changes in dates and locations.

## D. Waste Discharge Requirements Petitions

Any aggrieved person may petition the State Water Board to review the decision of the Regional Water Board regarding the final WDRs. The petition must be submitted within 30 days of the Regional Water Board's action to the following address:

State Water Resources Control Board
Office of Chief Counsel
P.O. Box 100, 1001 I Street
Sacramento, CA 95812-0100

## E. Information and Copying

The Report of Waste Discharge (RWD), related documents, tentative effluent limitations and special provisions, comments received, and other information are on file and may be inspected at the address above at any time between 9:00 a.m. and 3:00 p.m. Monday through Friday. Copying of documents may be arranged through the Regional Water Board by calling Jane Qiu (951) 320-2008.

## F. Register of Interested Persons

Any person interested in being placed on the mailing list for information regarding the WDRs and NPDES permit should contact the Regional Water Board, reference this facility, and provide a name, address, and phone number.

## G. Additional Information

Requests for additional information or questions regarding this Order should be directed to Jane Qiu at (951) 320-2008.

## ATTACHMENT G - EPA PRIORITY POLLUTANT LIST

| EPA PRIORITY POLLUTANT LIST | | | | | |
|---|---|---|---|---|---|
| **Metals** | | **Acid Extractibles** | | **Base/Neutral Extractibles (continuation)** | |
| 1. | Antimony | 45. | 2-Chlorophenol | 91. | Hexachloroethane |
| 2. | Arsenic | 46. | 2,4-Dichlorophenol | 92. | Indeno (1,2,3-cd) Pyrene |
| 3. | Beryllium | 47. | 2,4-Dimethylphenol | 93. | Isophorone |
| 4. | Cadmium | 48. | 2-Methyl-4,6-Dinitrophenol | 94. | Naphthalene |
| 5a. | Chromium (III) | 49. | 2,4-Dinitrophenol | 95. | Nitrobenzene |
| 5b. | Chromium (VI) | 50. | 2-Nitrophenol | 96. | N-Nitrosodimethylamine |
| 6. | Copper | 51. | 4-Nitrophenol | 97. | N-Nitrosodi-N-Propylamine |
| 7. | Lead | 52. | 3-Methyl-4-Chlorophenol | 98. | N-Nitrosodiphenylamine |
| 8. | Mercury | 53. | Pentachlorophenol | 99. | Phenanthrene |
| 9. | Nickel | 54. | Phenol | 100. | Pyrene |
| 10. | Selenium | 55. | 2, 4, 6 – Trichlorophenol | 101. | 1,2,4-Trichlorobenzene |
| 11. | Silver | **Base/Neutral Extractibles** | | **Pesticides** | |
| 12. | Thallium | 56. | Acenaphthene | 102. | Aldrin |
| 13. | Zinc | 57. | Acenaphthylene | 103. | Alpha BHC |
| **Miscellaneous** | | 58. | Anthracene | 104. | Beta BHC |
| 14. | Cyanide, Free | 59. | Benzidine | 105. | Delta BHC |
| 15. | Asbestos (not required unless requested) | 60. | Benzo (a) Anthracene | 106. | Gamma BHC |
| 16. | 2,3,7,8-Tetrachlorodibenzo-P-Dioxin (TCDD) | 61. | Benzo (a) Pyrene | 107. | Chlordane |
| **Volatile Organics** | | 62. | Benzo (b) Fluoranthene | 108. | 4, 4' - DDT |
| 17. | Acrolein | 63. | Benzo (g,h,i) Perylene | 109. | 4, 4' - DDE |
| 18. | Acrylonitrile | 64. | Benzo (k) Fluoranthene | 110. | 4, 4' - DDD |
| 19. | Benzene | 65. | Bis (2-Chloroethoxy) Methane | 111. | Dieldrin |
| 20. | Bromoform | 66. | Bis (2-Chloroethyl) Ether | 112. | Alpha Endosulfan |
| 21. | Carbon Tetrachloride | 67. | Bis (2-Chloroisopropyl) Ether | 113. | Beta Endosulfan |
| 22. | Chlorobenzene | 68. | Bis (2-Ethylhexyl) Phthalate | 114. | Endosulfan Sulfate |
| 23. | Chlorodibromomethane | 69. | 4-Bromophenyl Phenyl Ether | 115. | Endrin |
| 24. | Chloroethane | 70. | Butylbenzyl Phthalate | 116. | Endrin Aldehyde |
| 25. | 2-Chloroethyl Vinyl Ether | 71. | 2-Chloronaphthalene | 117. | Heptachlor |
| 26. | Chloroform | 72. | 4-Chlorophenyl Phenyl Ether | 118. | Heptachlor Epoxide |
| 27. | Dichlorobromomethane | 73. | Chrysene | 119. | PCB 1016 |
| 28. | 1,1-Dichloroethane | 74. | Dibenzo (a,h) Anthracene | 120. | PCB 1221 |
| 29. | 1,2-Dichloroethane | 75. | 1,2-Dichlorobenzene | 121. | PCB 1232 |
| 30. | 1,1-Dichloroethylene | 76. | 1,3-Dichlorobenzene | 122. | PCB 1242 |
| 31. | 1,2-Dichloropropane | 77. | 1,4-Dichlorobenzene | 123. | PCB 1248 |
| 32. | 1,3-Dichloropropylene | 78. | 3,3'-Dichlorobenzidine | 124. | PCB 1254 |
| 33. | Ethylbenzene | 79. | Diethyl Phthalate | 125. | PCB 1260 |
| 34. | Methyl Bromide | 80. | Dimethyl Phthalate | 126. | Toxaphene |
| 35. | Methyl Chloride | 81. | Di-n-Butyl Phthalate | | |
| 36. | Methylene Chloride | 82. | 2,4-Dinitrotoluene | | |
| 37. | 1,1,2,2-Tetrachloroethane | 83. | 2-6-Dinitrotoluene | | |
| 38. | Tetrachloroethylene | 84. | Di-n-Octyl Phthalate | | |
| 39. | Toluene | 85. | 1,2-Dipenylhydrazine | | |
| 40. | 1,2-Trans-Dichloroethylene | 86. | Fluoranthene | | |
| 41. | 1,1,1-Trichloroethane | 87. | Fluorene | | |
| 42. | 1,1,2-Trichloroethane | 88. | Hexachlorobenzene | | |
| 43. | Trichloroethylene | 89. | Hexachlorobutadiene | | |
| 44. | Vinyl Chloride | 90. | Hexachlorocyclopentadiene | | |

## ATTACHMENT H – MINIMUM LEVELS

### MINIMUM LEVELS IN PPB (μg/l)

| Table 1- VOLATILE SUBSTANCES[1] | GC | GCMS |
|---|---|---|
| Acrolein | 2.0 | 5 |
| Acrylonitrile | 2.0 | 2 |
| Benzene | 0.5 | 2 |
| Bromoform | 0.5 | 2 |
| Carbon Tetrachloride | 0.5 | 2 |
| Chlorobenzene | 0.5 | 2 |
| Chlorodibromomethane | 0.5 | 2 |
| Chloroethane | 0.5 | 2 |
| Chloroform | 0.5 | 2 |
| Dichlorobromomethane | 0.5 | 2 |
| 1,1 Dichloroethane | 0.5 | 1 |
| 1,2 Dichloroethane | 0.5 | 2 |
| 1,1 Dichloroethylene | 0.5 | 2 |
| 1,2 Dichloropropane | 0.5 | 1 |
| 1,3 Dichloropropylene (volatile) | 0.5 | 2 |
| Ethylbenzene | 0.5 | 2 |
| Methyl Bromide (*Bromomethane* ) | 1.0 | 2 |
| Methyl Chloride (*Chloromethane* ) | 0.5 | 2 |
| Methylene Chloride (*Dichloromethane*) | 0.5 | 2 |
| 1,1,2,2 Tetrachloroethane | 0.5 | 1 |
| Tetrachloroethylene | 0.5 | 2 |
| Toluene | 0.5 | 2 |
| trans-1,2 Dichloroethylene | 0.5 | 1 |
| 1,1,1 Trichloroethane | 0.5 | 2 |
| 1,1,2 Trichloroethane | 0.5 | 2 |
| Trichloroethylene | 0.5 | 2 |
| Vinyl Chloride | 0.5 | 2 |
| 1,2 Dichlorobenzene (volatile) | 0.5 | 2 |
| 1,3 Dichlorobenzene (volatile) | 0.5 | 2 |
| 1,4 Dichlorobenzene (volatile) | 0.5 | 2 |

## Selection and Use of Appropriate ML Value:

ML Selection: When there is more than one ML value for a given substance, the discharger may select any one of those ML values, and their associated analytical methods, listed in this Attachment that are below the calculated effluent limitation for compliance determination. If no ML value is below the effluent limitation, then the discharger shall select the lowest ML value, and its associated analytical method, listed in the PQL Table.

ML Usage: The ML value in this Attachment represents the lowest quantifiable concentration in a sample based on the proper application of all method-based analytical procedures and the absence of any matrix interferences. Assuming that all method-specific analytical steps are followed, the ML value will also represent, after the appropriate application of method-specific factors, the lowest standard in the calibration curve for that specific analytical technique. Common analytical practices sometimes require different treatment of the sample relative to calibration standards.
Note: chemical names in parenthesis and italicized is another name for the constituent.

---

1 *The normal method-specific factor for these substances is 1, therefore, the lowest standard concentration in the calibration curve is equal to the above ML value for each substance.*

## MINIMUM LEVELS IN PPB (µg/l)

| Table 2 – Semi-Volatile Substances[2] | GC | GCMS | LC |
|---|---|---|---|
| 2-Chloroethyl vinyl ether | 1 | 1 | |
| 2 Chlorophenol | 2 | 5 | |
| 2,4 Dichlorophenol | 1 | 5 | |
| 2,4 Dimethylphenol | 1 | 2 | |
| 4,6 Dinitro-2-methylphenol | 10 | 5 | |
| 2,4 Dinitrophenol | 5 | 5 | |
| 2- Nitrophenol | | 10 | |
| 4- Nitrophenol | 5 | 10 | |
| 4 Chloro-3-methylphenol | 5 | 1 | |
| 2,4,6 Trichlorophenol | 10 | 10 | |
| Acenaphthene | 1 | 1 | 0.5 |
| Acenaphthylene | | 10 | 0.2 |
| Anthracene | | 10 | 2 |
| Benzidine | | 5 | |
| Benzo (a) Anthracene (*1,2 Benzanthracene*) | 10 | 5 | |
| Benzo(a) pyrene (*3,4 Benzopyrene*) | | 10 | 2 |
| Benzo (b) Flouranthene (*3,4 Benzofluoranthene*) | | 10 | 10 |
| Benzo(g,h,i)perylene | | 5 | 0.1 |
| Benzo(k)fluoranthene | | 10 | 2 |
| bis 2-(1-Chloroethoxyl) methane | | 5 | |
| bis(2-chloroethyl) ether | 10 | 1 | |
| bis(2-Chloroisopropyl) ether | 10 | 2 | |
| bis(2-Ethylhexyl) phthalate | 10 | 5 | |
| 4-Bromophenyl phenyl ether | 10 | 5 | |
| Butyl benzyl phthalate | 10 | 10 | |
| 2-Chloronaphthalene | | 10 | |
| 4-Chlorophenyl phenyl ether | | 5 | |
| Chrysene | | 10 | 5 |
| Dibenzo(a,h)-anthracene | | 10 | 0.1 |
| 1,2 Dichlorobenzene (semivolatile) | 2 | 2 | |
| 1,3 Dichlorobenzene (semivolatile) | 2 | 1 | |
| 1,4 Dichlorobenzene (semivolatile) | 2 | 1 | |
| 3,3-Dichlorobenzidine | | 5 | |
| Diethyl phthalate | 10 | 2 | |
| Dimethyl phthalate | 10 | 2 | |
| di-n-Butyl phthalate | | 10 | |
| 2,4 Dinitrotoluene | 10 | 5 | |
| 2,6 Dinitrotoluene | | 5 | |
| di-n-Octyl phthalate | | 10 | |
| 1,2-Diphenylhydrazine | | 1 | |
| Fluoranthene | 10 | 1 | 0.05 |
| Fluorene | | 10 | 0.1 |
| Hexachloro-cyclopentadiene | 5 | 5 | |
| 1,2,4 Trichlorobenzene | 1 | 5 | |

## MINIMUM LEVELS IN PPB (µg/l)

| Table 2 - SEMI-VOLATILE SUBSTANCES[2] | GC | GCMS | LC | COLOR |
|---|---|---|---|---|
| Pentachlorophenol | 1 | 5 | | |
| Phenol [3] | 1 | 1 | | 50 |
| Hexachlorobenzene | 5 | 1 | | |
| Hexachlorobutadiene | 5 | 1 | | |
| Hexachloroethane | 5 | 1 | | |
| Indeno(1,2,3,cd)-pyrene | | 10 | 0.05 | |
| Isophorone | 10 | 1 | | |
| Naphthalene | 10 | 1 | 0.2 | |
| Nitrobenzene | 10 | 1 | | |
| N-Nitroso-dimethyl amine | 10 | 5 | | |
| N-Nitroso -di n-propyl amine | 10 | 5 | | |
| N-Nitroso diphenyl amine | 10 | 1 | | |
| Phenanthrene | | 5 | 0.05 | |
| Pyrene | | 10 | 0.05 | |

| Table 3– INORGANICS[4] | FAA | GFAA | ICP | ICPMS | SPGFAA | HYDRIDE | CVAA | COLOR | DCP |
|---|---|---|---|---|---|---|---|---|---|
| Antimony | 10 | 5 | 50 | 0.5 | 5 | 0.5 | | | 1000 |
| Arsenic | | 2 | 10 | 2 | 2 | 1 | | 20 | 1000 |
| Beryllium | 20 | 0.5 | 2 | 0.5 | 1 | | | | 1000 |
| Cadmium | 10 | 0.5 | 10 | 0.25 | 0.5 | | | | 1000 |
| Chromium (total) | 50 | 2 | 10 | 0.5 | 1 | | | | 1000 |
| Chromium VI | 5 | | | | | | | 10 | |
| Copper | 25 | 5 | 10 | 0.5 | 2 | | | | 1000 |
| Lead | 20 | 5 | 5 | 0.5 | 2 | | | | 10000 |
| Mercury | | | | 0.5 | | | 0.2 | | |
| Nickel | 50 | 5 | 20 | 1 | 5 | | | | 1000 |
| Selenium | | 5 | 10 | 2 | 5 | 1 | | | 1000 |
| Silver | 10 | 1 | 10 | 0.25 | 2 | | | | 1000 |
| Thallium | 10 | 2 | 10 | 1 | 5 | | | | 1000 |
| Zinc | 20 | | 20 | 1 | 10 | | | | 1000 |
| Cyanide | | | | | | | | 5 | |

2 *With the exception of phenol by colorimetric technique, the normal method-specific factor for these substances is 1000, therefore, the lowest standards concentration in the calibration curve is equal to the above ML value for each substance multiplied by 1000.*

3 *Phenol by colorimetric technique has a factor of 1.*

4 *The normal method-specific factor for these substances is 1, therefore, the lowest standard concentration in the calibration curve is equal to the above ML value for each substance.*

**MINIMUM LEVELS IN PPB (μg/l)**

| Table 4- PESTICIDES – PCBs[5] | GC |
|---|---|
| Aldrin | 0.005 |
| alpha–BHC (*a-Hexachloro-cyclohexane*) | 0.01 |
| beta–BHC (*b-Hexachloro-cyclohexane*) | 0.005 |
| Gamma–BHC (*Lindane; g-Hexachloro-cyclohexane*) | 0.02 |
| Delta-BHC (*d-Hexachloro-cyclohexane*) | 0.005 |
| Chlordane | 0.1 |
| 4,4'-DDT | 0.01 |
| 4,4'-DDE | 0.05 |
| 4,4'-DDD | 0.05 |
| Dieldrin | 0.01 |
| Alpha-Endosulfan | 0.02 |
| Beta-Endosulfan | 0.01 |
| Endosulfan Sulfate | 0.05 |
| Endrin | 0.01 |
| Endrin Aldehyde | 0.01 |
| Heptachlor | 0.01 |
| Heptachlor Epoxide | 0.01 |
| PCB 1016 | 0.5 |
| PCB 1221 | 0.5 |
| PCB 1232 | 0.5 |
| PCB 1242 | 0.5 |
| PCB 1248 | 0.5 |
| PCB 1254 | 0.5 |
| PCB 1260 | 0.5 |
| Toxaphene | 0.5 |

Techniques:
GC - Gas Chromatography
GCMS - Gas Chromatography/Mass Spectrometry
HRGCMS - High Resolution Gas Chromatography/Mass Spectrometry (i.e., EPA 1613, 1624, or 1625)
LC - High Pressure Liquid Chromatography
FAA - Flame Atomic Absorption
GFAA - Graphite Furnace Atomic Absorption
HYDRIDE - Gaseous Hydride Atomic Absorption
CVAA - Cold Vapor Atomic Absorption
ICP - Inductively Coupled Plasma
ICPMS - Inductively Coupled Plasma/Mass Spectrometry
SPGFAA - Stabilized Platform Graphite Furnace Atomic Absorption (i.e., EPA 200.9)
DCP - Direct Current Plasma
COLOR - Colorimetric

5 *The normal method-specific factor for these substances is 100, therefore, the lowest standard concentration in the calibration curve is equal to the above ML value for each substance multiplied by 100.*

## ATTACHMENT I – TRIGGERS FOR MONITORING PRIORITY POLLUTANTS

### Table I-1. For DP001 and DP002

| | CONSTITUENT | µg/L | | CONSTITUENT | µg/L |
|---|---|---|---|---|---|
| 1 | Antimony | 2150 | 38 | Tetratchloroethylene | 4.43 |
| 2 | Arsenic | 75 | *39* | ***Toluene*** | ***150*** |
| 3 | Beryllium | -- | *40* | ***1,2,-Trans-dichloroethylene*** | ***10*** |
| 4 | Cadmium | 3.7 | *41* | ***1,1,1-Trichloroethane*** | ***200*** |
| 5a | Chromium III | 122 | 42 | ***1,1,2-Trichloroethane*** | ***5*** |
| 5b | Chromium VI | 5.5 | *43* | ***Trichloroethylene*** | ***5*** |
| 6 | Copper | 14 | *44* | ***Vinyl Chloride*** | ***0.5*** |
| 7 | Lead | 12 | 45 | 2-Chlorophenol | 200 |
| 8 | Mercury | 0.026 | 46 | 2,4-Dichlorophenol | 395 |
| 9 | Nickel | 31 | 47 | 2,4-Dimethylphenol | 1150 |
| 10 | Selenium | 2.5 | 48 | 2-Methy-4,6-Dinitrophenol | 383 |
| 11 | Silver | 2.9 | 49 | 2,4-Dinitrophenol | 7000 |
| 12 | Thallium | 3.2 | 50 | 2-Nitrophenol | -- |
| 13 | Zinc | 71 | 51 | 4-Nitrophenol | -- |
| 14 | Cyanide | 2.6 | 52 | 3-Methyl-4-Chlorophenol | -- |
| 15 | Asbestos | -- | 53 | ***Pentachlorophenol*** | ***1*** |
| 16 | 2,3,7,8-TCDD (Dioxin) | 0.000000007 | 54 | Phenol | 2,300,000 |
| 17 | Acrolein | 390 | 55 | 2,4,6-Trichlorophenol | 3.3 |
| 18 | Acrylonitrile | 0.33 | 56 | Acenapthene | 1,350 |
| 19 | ***Benzene*** | ***1*** | 57 | Acenapthylene | -- |
| 20 | Bromoform | 180 | 58 | Anthracene | 55,000 |
| 21 | ***Carbon Tetrachloride*** | ***0.5*** | 59 | Benzidine | 0.00027 |
| 22 | Chlorobenzene | 10500 | 60 | Benzo (a) anthracene | 0.025 |
| 23 | Chlorodibromomethane | 17 | 61 | Benzo (a) pyrene | 0.025 |
| 24 | Chloroethane | -- | 62 | Benzo (b) fluoranthene | 0.025 |
| 25 | 2-Chloroethyl vinyl ether | -- | 63 | Benzo (g,h,i) pyrylene | -- |
| 26 | Chloroform | -- | 64 | Benzo (k) fluorantene | 0.025 |
| **27** | Dichlorobromomethane | 23 | 65 | Bis (2-Chloroethoxy) methane | -- |
| ***28*** | ***1,1-Dichloroethane*** | ***5*** | 66 | Bis (2-Chloroethyl) ether | 0.7 |
| **29** | ***1,2-Dichloroethane*** | ***0.5*** | 67 | Bis (2-Chloroisopropyl) ether | 85,000 |
| 30 | 1,1-Dichloroethylene | 1.6 | 68 | Bis (2-ethyhexyl) phthalate | 3.0 |
| **31** | ***1,2-Dichloropropane*** | ***5*** | 69 | 4-Bromophenyl phenyl ether | -- |
| **32** | ***1,3-Dichloropropylene*** | ***0.5*** | 70 | Butyl benzyl phthalate | 2600 |
| ***33*** | ***Ethylbenzene*** | ***300*** | 71 | 2- Chloronapthalene | 2150 |
| 34 | Methyl Bromide | 2000 | 72 | 4-Chlrorphenyl phenyl ether | -- |
| 35 | Methyl Chloride | -- | 73 | Chrysene | 0.025 |
| 36 | Methylene Chloride | 800 | 74 | Dibenzo (a,h) anthracene | 0.025 |
| 37 | ***1,1,2,2-Tetratchloroethane*** | ***1*** | ***75*** | ***1,2-Dichlorobenzene*** | ***600*** |

**Table I-1. For DP001 and DP002--Continued**

| | CONSTITUENT | µg/L |
|---|---|---|
| 76 | 1,3-Dichlorobenzene | 1,300 |
| ***77*** | ***1,4-Dichlorobenzene*** | ***5*** |
| 78 | 3,3-Dichlorobenzidine | 0.039 |
| 79 | Diethyl phthalate | 60,000 |
| 80 | Dimethyl phthalate | 1,450,000 |
| 81 | Di-N-butyl phthalate | 6,000 |
| 82 | 2,4-Dinitrotoluene | 4.6 |
| 83 | 2,6-Dinitrotoluene | -- |
| 84 | Di-N-octyl phthalate | -- |
| 85 | 1,2-Diphenylhydrazine | 0.27 |
| 86 | Fluoranthene | 185 |
| 87 | Fluorene | 7,000 |
| 88 | Hexachlorobenzene | 0.00039 |
| 89 | Hexachlorobutadiene | 25 |
| ***90*** | ***Hexachlorocyclopentadiene*** | ***50*** |
| 91 | Hexachloroethane | 4.5 |
| 92 | Indeno (1,2,3-cd) pyrene | 0.025 |
| 93 | Isophorone | 300 |
| ***94*** | ***Naphthalene*** | ***17*** |
| 95 | Nitrobenzene | 950 |
| 96 | ***N-Nitrosodimethylamine*** | ***0.01*** |
| 97 | ***N-Nitrosodi-N-propylamine*** | ***0.01*** |
| 98 | N-Nitrosodiphenylamine | 8 |
| 99 | Phenantrene | -- |

| | CONSTITUENT | µg/L |
|---|---|---|
| 100 | Pyrene | 5,500 |
| ***101*** | ***1,2,4 -Trichlorobenzene*** | ***5*** |
| 102 | Aldrin | 0.00007 |
| 103 | BHC Alpha | 0.0065 |
| 104 | BHC Beta | 0.023 |
| 105 | BHC Gamma | 0.032 |
| 106 | BHC Delta | -- |
| 107 | Chlordane | 0.0003 |
| 108 | 4,4-DDT | 0.0003 |
| 109 | 4,4-DDE | 0.0003 |
| 110 | 4,4-DDD | 0.00042 |
| 111 | Dieldrin | 0.00007 |
| 112 | Endosulfan Alpha | 0.028 |
| 113 | Endosulfan Beta | 0.028 |
| 114 | Endosulfan Sulfate | 120 |
| 115 | Endrin | 0.018 |
| 116 | Endrin Aldehyde | 0.42 |
| 117 | Heptachlor | 0.00011 |
| 118 | Heptachlor Epoxide | 0.000055 |
| 119 | PCB 1016 | 0.000085 |
| 120 | PCB 1221 | 0.000085 |
| 125 | PCB 1260 | 0.000085 |
| 126 | Toxaphene | 0.0001 |
| | | |

Notes:

1. For constituents not shown italicized, the values shown in the Table are fifty percent of the most stringent applicable receiving water objectives (freshwater or human health (consumption of water and organisms) as specified for that pollutant in 40 CFR 131.38[1]).
2. For constituents shown bold and italicized, the values shown in the Table are based on the California Department of Public Health maximum contaminant levels (MCLs) or Notification Level. Notification Level based trigger is underlined.
3. For hardness dependent metals, the hardness value used is 122 mg/L as 5$^{th}$ percentile of effluent flows and for pentachlorophenol, the pH value used is 7.5 standard units.

[1] *See Federal Register/ Vol. 65, No. 97 / Thursday, May 18, 2000 / Rules and Regulations.*

## Table I-1. For DP003

| | CONSTITUENT | µg/L | | | CONSTITUENT | µg/L |
|---|---|---|---|---|---|---|
| 1 | Antimony | 2150 | | 38 | Tetratchloroethylene | 4.43 |
| 2 | Arsenic | 75 | | ***39*** | ***Toluene*** | ***150*** |
| 3 | Beryllium | -- | | ***40*** | ***1,2,-Trans-dichloroethylene*** | ***10*** |
| 4 | Cadmium | 4.4 | | ***41*** | ***1,1,1-Trichloroethane*** | ***200*** |
| 5a | Chromium III | 143 | | 42 | ***1,1,2-Trichloroethane*** | ***5*** |
| 5b | Chromium VI | 5.5 | | ***43*** | ***Trichloroethylene*** | ***5*** |
| 6 | Copper | 17 | | ***44*** | ***Vinyl Chloride*** | ***0.5*** |
| 7 | Lead | 16 | | 45 | 2-Chlorophenol | 200 |
| 8 | Mercury | 0.026 | | 46 | 2,4-Dichlorophenol | 395 |
| 9 | Nickel | 36 | | 47 | 2,4-Dimethylphenol | 1150 |
| 10 | Selenium | 2.5 | | 48 | 2-Methy-4,6-Dinitrophenol | 383 |
| 11 | Silver | 4.0 | | 49 | 2,4-Dinitrophenol | 7000 |
| 12 | Thallium | 3.2 | | 50 | 2-Nitrophenol | -- |
| 13 | Zinc | 84 | | 51 | 4-Nitrophenol | -- |
| 14 | Cyanide | 2.6 | | 52 | 3-Methyl-4-Chlorophenol | -- |
| 15 | Asbestos | -- | | 53 | ***Pentachlorophenol*** | ***1*** |
| 16 | 2,3,7,8-TCDD (Dioxin) | 0.000000007 | | 54 | Phenol | 2,300,000 |
| 17 | Acrolein | 390 | | 55 | 2,4,6-Trichlorophenol | 3.3 |
| 18 | Acrylonitrile | 0.33 | | 56 | Acenapthene | 1,350 |
| 19 | ***Benzene*** | ***1*** | | 57 | Acenapthylene | -- |
| 20 | Bromoform | 180 | | 58 | Anthracene | 55,000 |
| 21 | ***Carbon Tetrachloride*** | ***0.5*** | | 59 | Benzidine | 0.00027 |
| 22 | Chlorobenzene | 10500 | | 60 | Benzo (a) anthracene | 0.025 |
| 23 | Chlorodibromomethane | 17 | | 61 | Benzo (a) pyrene | 0.025 |
| 24 | Chloroethane | -- | | 62 | Benzo (b) fluoranthene | 0.025 |
| 25 | 2-Chloroethyl vinyl ether | -- | | 63 | Benzo (g,h,i) pyrylene | -- |
| 26 | Chloroform | -- | | 64 | Benzo (k) fluorantene | 0.025 |
| **27** | Dichlorobromomethane | 23 | | 65 | Bis (2-Chloroethoxy) methane | -- |
| ***28*** | ***1,1-Dichloroethane*** | ***5*** | | 66 | Bis (2-Chloroethyl) ether | 0.7 |
| **29** | ***1,2-Dichloroethane*** | ***0.5*** | | 67 | Bis (2-Chloroisopropyl) ether | 85,000 |
| 30 | 1,1-Dichloroethylene | 1.6 | | 68 | Bis (2-ethyhexyl) phthalate | 3.0 |
| **31** | ***1,2-Dichloropropane*** | ***5*** | | 69 | 4-Bromophenyl phenyl ether | -- |
| **32** | ***1,3-Dichloropropylene*** | ***0.5*** | | 70 | Butyl benzyl phthalate | 2600 |
| ***33*** | ***Ethylbenzene*** | ***300*** | | 71 | 2- Chloronapthalene | 2150 |
| 34 | Methyl Bromide | 2000 | | 72 | 4-Chlrorphenyl phenyl ether | -- |
| 35 | Methyl Chloride | -- | | 73 | Chrysene | 0.025 |
| 36 | Methylene Chloride | 800 | | 74 | Dibenzo (a,h) anthracene | 0.025 |
| 37 | ***1,1,2,2-Tetratchloroethane*** | ***1*** | | ***75*** | ***1,2-Dichlorobenzene*** | ***600*** |

**Table I-1. For DP003--Continued**

| | CONSTITUENT | µg/L |
|---|---|---|
| 76 | 1,3-Dichlorobenzene | 1,300 |
| ***77*** | ***1,4-Dichlorobenzene*** | ***5*** |
| 78 | 3,3-Dichlorobenzidine | 0.039 |
| 79 | Diethyl phthalate | 60,000 |
| 80 | Dimethyl phthalate | 1,450,000 |
| 81 | Di-N-butyl phthalate | 6,000 |
| 82 | 2,4-Dinitrotoluene | 4.6 |
| 83 | 2,6-Dinitrotoluene | -- |
| 84 | Di-N-octyl phthalate | -- |
| 85 | 1,2-Diphenylhydrazine | 0.27 |
| 86 | Fluoranthene | 185 |
| 87 | Fluorene | 7,000 |
| 88 | Hexachlorobenzene | 0.00039 |
| 89 | Hexachlorobutadiene | 25 |
| ***90*** | ***Hexachlorocyclopentadiene*** | ***50*** |
| 91 | Hexachloroethane | 4.5 |
| 92 | Indeno (1,2,3-cd) pyrene | 0.025 |
| 93 | Isophorone | 300 |
| ***94*** | ***Naphthalene*** | ***17*** |
| 95 | Nitrobenzene | 950 |
| 96 | ***N-Nitrosodimethylamine*** | ***0.01*** |
| 97 | ***N-Nitrosodi-N-propylamine*** | ***0.01*** |
| 98 | N-Nitrosodiphenylamine | 8 |
| 99 | Phenantrene | -- |

| | CONSTITUENT | µg/L |
|---|---|---|
| 100 | Pyrene | 5,500 |
| ***101*** | ***1,2,4 -Trichlorobenzene*** | ***5*** |
| 102 | Aldrin | 0.00007 |
| 103 | BHC Alpha | 0.0065 |
| 104 | BHC Beta | 0.023 |
| 105 | BHC Gamma | 0.032 |
| 106 | BHC Delta | -- |
| 107 | Chlordane | 0.0003 |
| 108 | 4,4-DDT | 0.0003 |
| 109 | 4,4-DDE | 0.0003 |
| 110 | 4,4-DDD | 0.00042 |
| 111 | Dieldrin | 0.00007 |
| 112 | Endosulfan Alpha | 0.028 |
| 113 | Endosulfan Beta | 0.028 |
| 114 | Endosulfan Sulfate | 120 |
| 115 | Endrin | 0.018 |
| 116 | Endrin Aldehyde | 0.42 |
| 117 | Heptachlor | 0.00011 |
| 118 | Heptachlor Epoxide | 0.000055 |
| 119 | PCB 1016 | 0.000085 |
| 120 | PCB 1221 | 0.000085 |
| 125 | PCB 1260 | 0.000085 |
| 126 | Toxaphene | 0.0001 |
| | | |

Notes:

4. For constituents not shown italicized, the values shown in the Table are fifty percent of the most stringent applicable receiving water objectives (freshwater or human health (consumption of water and organisms) as specified for that pollutant in 40 CFR 131.38[2]).
5. For constituents shown bold and italicized, the values shown in the Table are based on the California Department of Public Health maximum contaminant levels (MCLs) or Notification Level. Notification Level based trigger is underlined.
6. For hardness dependent metals, the hardness value used is 148 mg/L as 5$^{th}$ percentile of effluent flows and for pentachlorophenol, the pH value used is 7.5 standard units.

[2] *See Federal Register/ Vol. 65, No. 97 / Thursday, May 18, 2000 / Rules and Regulations.*

## Table I-2. For DP004

| | CONSTITUENT | µg/L | | | CONSTITUENT | µg/L |
|---|---|---|---|---|---|---|
| 1 | Antimony | 2150 | | 38 | Tetratchloroethylene | 4.43 |
| 2 | Arsenic | 75 | | ***39*** | ***Toluene*** | ***150*** |
| 3 | Beryllium | -- | | ***40*** | ***1,2,-Trans-dichloroethylene*** | ***10*** |
| 4 | Cadmium | 3.9 | | ***41*** | ***1,1,1-Trichloroethane*** | ***200*** |
| 5a | Chromium III | 128 | | 42 | ***1,1,2-Trichloroethane*** | ***5*** |
| 5b | Chromium VI | 5.5 | | ***43*** | ***Trichloroethylene*** | ***5*** |
| 6 | Copper | 15 | | ***44*** | ***Vinyl Chloride*** | ***0.5*** |
| 7 | Lead | 14 | | 45 | 2-Chlorophenol | 200 |
| 8 | Mercury | 0.026 | | 46 | 2,4-Dichlorophenol | 395 |
| 9 | Nickel | 33 | | 47 | 2,4-Dimethylphenol | 1150 |
| 10 | Selenium | 2.5 | | 48 | 2-Methy-4,6-Dinitrophenol | 383 |
| 11 | Silver | 3.2 | | 49 | 2,4-Dinitrophenol | 7000 |
| 12 | Thallium | 3.2 | | 50 | 2-Nitrophenol | -- |
| 13 | Zinc | 75 | | 51 | 4-Nitrophenol | -- |
| 14 | Cyanide | 2.6 | | 52 | 3-Methyl-4-Chlorophenol | -- |
| 15 | Asbestos | -- | | 53 | ***Pentachlorophenol*** | ***1*** |
| 16 | 2,3,7,8-TCDD (Dioxin) | 0.000000007 | | 54 | Phenol | 2,300,000 |
| 17 | Acrolein | 390 | | 55 | 2,4,6-Trichlorophenol | 3.3 |
| 18 | Acrylonitrile | 0.33 | | 56 | Acenapthene | 1,350 |
| 19 | ***Benzene*** | ***1*** | | 57 | Acenapthylene | -- |
| 20 | Bromoform | 180 | | 58 | Anthracene | 55,000 |
| 21 | ***Carbon Tetrachloride*** | ***0.5*** | | 59 | Benzidine | 0.00027 |
| 22 | Chlorobenzene | 10500 | | 60 | Benzo (a) anthracene | 0.025 |
| 23 | Chlorodibromomethane | 17 | | 61 | Benzo (a) pyrene | 0.025 |
| 24 | Chloroethane | -- | | 62 | Benzo (b) fluoranthene | 0.025 |
| 25 | 2-Chloroethyl vinyl ether | -- | | 63 | Benzo (g,h,i) pyrylene | -- |
| 26 | Chloroform | -- | | 64 | Benzo (k) fluorantene | 0.025 |
| **27** | Dichlorobromomethane | 23 | | 65 | Bis (2-Chloroethoxy) methane | -- |
| ***28*** | ***1,1-Dichloroethane*** | ***5*** | | 66 | Bis (2-Chloroethyl) ether | 0.7 |
| **29** | ***1,2-Dichloroethane*** | ***0.5*** | | 67 | Bis (2-Chloroisopropyl) ether | 85,000 |
| 30 | 1,1-Dichloroethylene | 1.6 | | 68 | Bis (2-ethyhexyl) phthalate | 3.0 |
| **31** | ***1,2-Dichloropropane*** | ***5*** | | 69 | 4-Bromophenyl phenyl ether | -- |
| **32** | ***1,3-Dichloropropylene*** | ***0.5*** | | 70 | Butyl benzyl phthalate | 2600 |
| ***33*** | ***Ethylbenzene*** | ***300*** | | 71 | 2- Chloronapthalene | 2150 |
| 34 | Methyl Bromide | 2000 | | 72 | 4-Chlrorphenyl phenyl ether | -- |
| 35 | Methyl Chloride | -- | | 73 | Chrysene | 0.025 |
| 36 | Methylene Chloride | 800 | | 74 | Dibenzo (a,h) anthracene | 0.025 |
| 37 | ***1,1,2,2-Tetratchloroethane*** | ***1*** | | ***75*** | ***1,2-Dichlorobenzene*** | ***600*** |

**Table I-1. For DP004--Continued**

| | CONSTITUENT | µg/L |
|---|---|---|
| 76 | 1,3-Dichlorobenzene | 1,300 |
| ***77*** | ***1,4-Dichlorobenzene*** | ***5*** |
| 78 | 3,3-Dichlorobenzidine | 0.039 |
| 79 | Diethyl phthalate | 60,000 |
| 80 | Dimethyl phthalate | 1,450,000 |
| 81 | Di-N-butyl phthalate | 6,000 |
| 82 | 2,4-Dinitrotoluene | 4.6 |
| 83 | 2,6-Dinitrotoluene | -- |
| 84 | Di-N-octyl phthalate | -- |
| 85 | 1,2-Diphenylhydrazine | 0.27 |
| 86 | Fluoranthene | 185 |
| 87 | Fluorene | 7,000 |
| 88 | Hexachlorobenzene | 0.00039 |
| 89 | Hexachlorobutadiene | 25 |
| ***90*** | ***Hexachlorocyclopentadiene*** | ***50*** |
| 91 | Hexachloroethane | 4.5 |
| 92 | Indeno (1,2,3-cd) pyrene | 0.025 |
| 93 | Isophorone | 300 |
| ***94*** | ***Naphthalene*** | ***17*** |
| 95 | Nitrobenzene | 950 |
| 96 | ***N-Nitrosodimethylamine*** | ***0.01*** |
| 97 | ***N-Nitrosodi-N-propylamine*** | ***0.01*** |
| 98 | N-Nitrosodiphenylamine | 8 |
| 99 | Phenantrene | -- |

| | CONSTITUENT | µg/L |
|---|---|---|
| 100 | Pyrene | 5,500 |
| ***101*** | ***1,2,4 -Trichlorobenzene*** | ***5*** |
| 102 | Aldrin | 0.00007 |
| 103 | BHC Alpha | 0.0065 |
| 104 | BHC Beta | 0.023 |
| 105 | BHC Gamma | 0.032 |
| 106 | BHC Delta | -- |
| 107 | Chlordane | 0.0003 |
| 108 | 4,4-DDT | 0.0003 |
| 109 | 4,4-DDE | 0.0003 |
| 110 | 4,4-DDD | 0.00042 |
| 111 | Dieldrin | 0.00007 |
| 112 | Endosulfan Alpha | 0.028 |
| 113 | Endosulfan Beta | 0.028 |
| 114 | Endosulfan Sulfate | 120 |
| 115 | Endrin | 0.018 |
| 116 | Endrin Aldehyde | 0.42 |
| 117 | Heptachlor | 0.00011 |
| 118 | Heptachlor Epoxide | 0.000055 |
| 119 | PCB 1016 | 0.000085 |
| 120 | PCB 1221 | 0.000085 |
| 125 | PCB 1260 | 0.000085 |
| 126 | Toxaphene | 0.0001 |
| | | |

Notes:

7. For constituents not shown italicized, the values shown in the Table are fifty percent of the most stringent applicable receiving water objectives (freshwater or human health (consumption of water and organisms) as specified for that pollutant in 40 CFR 131.38[3]).
8. For constituents shown bold and italicized, the values shown in the Table are based on the California Department of Public Health maximum contaminant levels (MCLs) or Notification Level. Notification Level based trigger is underlined.
9. For hardness dependent metals, the hardness value used is 130 mg/L as 5$^{th}$ percentile of effluent flows and for pentachlorophenol, the pH value used is 7.5 standard units.

[3] *See Federal Register/ Vol. 65, No. 97 / Thursday, May 18, 2000 / Rules and Regulations.*

# ATTACHMENT J – STORMWATER POLLUTION PREVENTION PLAN REQUIREMENTS

1. *Implementation Schedule*

The storm water pollution prevention plan (SWPPP) shall be updated and implemented in a timely manner, but in no case later than October 30, 2009.

2. *Objectives*

The SWPPP has two major objectives: (a) to identify and evaluate sources of pollutants associated with industrial activities that may affect the quality of storm water discharges and authorized non-storm water discharges from the facility; and (b) to identify and implement site-specific best management practices (BMPs) to reduce or prevent pollutants associated with industrial activities in storm water discharges and authorized non-storm water discharges. BMPs may include a variety of pollution prevention measures or other low-cost pollution control measures. They are generally categorized as non-structural BMPs (activity schedules, prohibitions of practices, maintenance procedures, and other low-cost measures) and as structural BMPs (treatment measures, run-off controls, over-head coverage). To achieve these objectives, dischargers should consider the five phase process for SWPPP development and implementation as shown in Table A, below.

The SWPPP requirements are designed to be sufficiently flexible to meet the various needs of the facility. SWPPP requirements that are not applicable to the facility should not be included in the SWPPP.

A facility's SWPPP is a written document that shall contain a compliance activity schedule, a description of industrial activities and pollutant sources, descriptions of BMPs, drawings, maps, and relevant copies or references of parts of other plans. The SWPPP shall be revised whenever appropriate and shall be readily available for review by facility employees or Regional Water Board inspectors.

3. *Planning and Organization*

   a. *Pollution Prevention Team*

   The SWPPP shall identify a specific individual or individuals and their positions within the facility organization as members of a storm water pollution prevention team responsible for developing the SWPPP, assisting the facility manager in SWPPP implementation and revision, and conducting all monitoring program activities required in the Stormwater monitoring program of Order No. R8-2009-0021. The SWPPP shall clearly identify the storm water pollution prevention related responsibilities, duties, and activities of each team member.

*b. Review Other Requirements and Existing Facility Plans*

The SWPPP may incorporate or reference the appropriate elements of other regulatory requirements. The discharger shall review all local, state, and federal requirements that impact, complement, or are consistent with the requirements of Order No. R8-2009-0021. The discharger shall identify any existing facility plans that contain storm water pollutant control measures or relate to the requirements of Order No. R8-2009-0021. As examples, dischargers whose facilities are subject to Federal Spill Prevention Control and Countermeasures' requirements should already have instituted a plan to control spills of certain hazardous materials. Similarly, the discharger whose facilities are subject to air quality related permits and regulations may already have evaluated industrial activities that generate dust or particulates.

4. *Site Map*

The SWPPP shall include a site map. The site map shall be provided on an 8-1/2 x 11 inch or larger sheet and include notes, legends, and other data as appropriate to ensure that the site map is clear and understandable. If necessary, the discharger may provide the required information on multiple site maps. The following information shall be included on the site map:

a. The facility boundaries; the outline of all storm water drainage areas within the facility boundaries; portions of the drainage area impacted by run-on from surrounding areas; and direction of flow of each drainage area, on-site surface water bodies, and areas of soil erosion. The map shall also identify nearby water bodies (such as rivers, lakes, ponds) and municipal storm drain inlets where the facility's storm water discharges and authorized non-storm water discharges may be received.

b. The location of the storm water collection and conveyance system, associated points of discharge, and direction of flow. Include any structural control measures that affect storm water discharges, authorized non-storm water discharges, and run-on. Examples of structural control measures are catch basins, berms, detention ponds, secondary containment, oil/water separators, diversion barriers, etc.

c. An outline of all impervious areas of the facility, including paved areas, buildings, covered storage areas, or other roofed structures.

d. Locations where materials are directly exposed to precipitation and the locations where significant spills or leaks identified in Section 6.a.(4)., below, have occurred.

e. Areas of industrial activity. This shall include the locations of all storage areas and storage tanks, shipping and receiving areas, fueling areas, vehicle and equipment storage/maintenance areas, material handling and processing areas, waste treatment and disposal areas, dust or particulate generating areas,

cleaning and rinsing areas, and other areas of industrial activity which are potential pollutant sources.

5. *List of Significant Materials*

The SWPPP shall include a list of significant materials handled and stored at the site. For each material on the list, describe the locations where the material is being stored, received, shipped, and handled, as well as the typical quantities and frequency. Materials shall include raw materials, intermediate products, final or finished products, recycled materials, and waste or disposed materials.

6. *Description of Potential Pollutant Sources*

a. The SWPPP shall include a narrative description of the facility's industrial activities, as identified in Section 4.e., above, associated potential pollutant sources, and potential pollutants that could be discharged in storm water discharges or authorized non-storm water discharges. At a minimum, the following items related to a facility's industrial activities shall be considered:

1) Industrial Processes

Describe each industrial process, the type, characteristics, and quantity of significant materials used in or resulting from the process, and a description of the processes (manufacturing or treatment), cleaning, rinsing, recycling, disposal, or other activities related to the process. Where applicable, areas protected by containment structures and the corresponding containment capacity shall be described.

2) Material Handling and Storage Areas

Describe each handling and storage area, type, characteristics, and quantity of significant materials handled or stored, description of the shipping, receiving, and loading procedures, and the spill or leak prevention and response procedures. Where applicable, areas protected by containment structures and the corresponding containment capacity shall be described.

3) Dust and Particulate Generating Activities

Describe all industrial activities that generate dust or particulates that may be deposited within the facility's boundaries and identify their discharge locations; the characteristics of dust and particulate pollutants; the approximate quantity of dust and particulate pollutants that may be deposited within the facility boundaries; and a description of the primary areas of the facility where dust and particulate pollutants would settle.

4) Significant Spills and Leaks

Describe materials that have spilled or leaked in significant quantities in storm water discharges or non-storm water discharges. Include toxic chemicals (listed in 40 Code of Federal Regulations [CFR] Part 302) that have been discharged to storm water as reported on U.S. Environmental Protection Agency (U.S. EPA) Form R, and oil and hazardous substances in excess of reportable quantities (see 40 CFR, Parts 110, 117, and 302).

The description shall include the type, characteristics, and approximate quantity of the material spilled or leaked, the cleanup or remedial actions that have occurred or are planned, the approximate remaining quantity of materials that may be exposed to storm water or non-storm water discharges, and the preventative measures taken to ensure spills or leaks do not reoccur. Such list shall be updated as appropriate during the term of Order No. R8-2009-0021.

5) Non-Storm Water Discharges

The discharger shall investigate the facility to identify all non-storm water discharges and their sources. As part of this investigation, all drains (inlets and outlets) shall be evaluated to identify whether they connect to the storm drain system.

All non-storm water discharges shall be described. This shall include the source, quantity, frequency, and characteristics of the non-storm water discharges and associated drainage area.

Non-storm water discharges that contain significant quantities of pollutants or that do not meet the conditions of Order No. R8-2009-0021 are prohibited. (Examples of prohibited non-storm water discharges are contact and non-contact cooling water, boiler blowdown, rinse water, wash water, etc.). The SWPPP must include BMPs to prevent or reduce contact of non-storm water discharges with significant materials or equipment.

6) Soil Erosion

Describe the facility locations where soil erosion may occur as a result of industrial activity, storm water discharges associated with industrial activity, or authorized non-storm water discharges.

b. The SWPPP shall include a summary of all areas of industrial activities, potential pollutant sources, and potential pollutants. This information should be summarized similar to Table B below. The last column of Table B, "Control Practices", should be completed in accordance with Section 8., below.

7. *Assessment of Potential Pollutant Sources*

a. The SWPPP shall include a narrative assessment of all industrial activities and potential pollutant sources as described in Section 6., above, to determine:

1) Which areas of the facility are likely sources of pollutants in storm water discharges and authorized non-storm water discharges, and

2) Which pollutants are likely to be present in storm water discharges and authorized non-storm water discharges. The discharger shall consider and evaluate various factors when performing this assessment such as current storm water BMPs; quantities of significant materials handled, produced, stored, or disposed of; likelihood of exposure to storm water or authorized non-storm water discharges; history of spill or leaks; and run-on from outside sources.

b. The discharger shall summarize the areas of the facility that are likely sources of pollutants and the corresponding pollutants that are likely to be present in storm water discharges and authorized non-storm water discharges.

The discharger is required to develop and implement additional BMPs as appropriate and necessary to prevent or reduce pollutants associated with each pollutant source. The BMPs will be narratively described in Section 8., below.

8. *Storm Water Best Management Practices*

The SWPPP shall include a narrative description of the storm water BMPs to be implemented at the facility for each potential pollutant and its source identified in the site assessment phase (Sections 6. and 7., above). The BMPs shall be developed and implemented to reduce or prevent pollutants in storm water discharges and authorized non-storm water discharges. Each pollutant and its source may require one or more BMPs. Some BMPs may be implemented for multiple pollutants and their sources, while other BMPs will be implemented for a very specific pollutant and its source.

The description of the BMPs shall identify the BMPs as (1) existing BMPs, (2) existing BMPs to be revised and implemented, or (3) new BMPs to be implemented. The description shall also include a discussion on the effectiveness of each BMP to reduce or prevent pollutants in storm water discharges and authorized non-storm water discharges. The SWPPP shall provide a summary of all BMPs implemented for each pollutant source. This information should be summarized similar to Table B.

The discharger shall consider the following BMPs for implementation at the facility:

a. Non-Structural BMPs: Non-structural BMPs generally consist of processes, prohibitions, procedures, schedule of activities, etc., that prevent pollutants associated with industrial activity from contacting with storm water discharges and authorized non-storm water discharges. They are considered low technology, cost-effective measures. The discharger should consider all possible non-structural BMPs options before considering additional structural BMPs (see Section 8.b., below). Below is a list of non-structural BMPs that should be considered:

1) Good Housekeeping: Good housekeeping generally consist of practical procedures to maintain a clean and orderly facility.

2) Preventive Maintenance: Preventive maintenance includes the regular inspection and maintenance of structural storm water controls (catch basins, oil/water separators, etc.) as well as other facility equipment and systems.

3) Spill Response: This includes spill clean-up procedures and necessary clean-up equipment based upon the quantities and locations of significant materials that may spill or leak.

4) Material Handling and Storage: This includes all procedures to minimize the potential for spills and leaks and to minimize exposure of significant materials to storm water and authorized non-storm water discharges.

5) Employee Training: This includes training of personnel who are responsible for (a) implementing activities identified in the SWPPP, (b) conducting inspections, sampling, and visual observations, and (c) managing storm water. Training should address topics such as spill response, good housekeeping, and material handling procedures, and actions necessary to implement all BMPs identified in the SWPPP. The SWPPP shall identify periodic dates for such training. Records shall be maintained of all training sessions held.

6) Waste Handling/Recycling: This includes the procedures or processes to handle, store, or dispose of waste materials or recyclable materials.

7) Record Keeping and Internal Reporting: This includes the procedures to ensure that all records of inspections, spills, maintenance activities, corrective actions, visual observations, etc., are developed, retained, and provided, as necessary, to the appropriate facility personnel.

8) Erosion Control and Site Stabilization: This includes a description of all sediment and erosion control activities. This may include the planting and maintenance of vegetation, diversion of run-on and runoff, placement of sandbags, silt screens, or other sediment control devices, etc.

9) Inspections: This includes, in addition to the preventative maintenance inspections identified above, an inspection schedule of all potential pollutant sources. Tracking and follow-up procedures shall be described to ensure adequate corrective actions are taken and SWPPPs are made.

10) Quality Assurance: This includes the procedures to ensure that all elements of the SWPPP and Monitoring Program are adequately conducted.

b. Structural BMPs: Where non-structural BMPs as identified in Section 8.a., above, are not effective, structural BMPs shall be considered. Structural BMPs generally consist of structural devices that reduce or prevent pollutants in storm water discharges and authorized non-storm water discharges. Below is a list of structural BMPs that should be considered:

1) Overhead Coverage: This includes structures that provide horizontal coverage of materials, chemicals, and pollutant sources from contact with storm water and authorized non-storm water discharges.

2) Retention Ponds: This includes basins, ponds, surface impoundments, bermed areas, etc., that do not allow storm water to discharge from the facility.

3) Control Devices: This includes berms or other devices that channel or route run-on and runoff away from pollutant sources.

4) Secondary Containment Structures: This generally includes containment structures around storage tanks and other areas for the purpose of collecting any leaks or spills.

5) Treatment: This includes inlet controls, infiltration devices, oil/water separators, detention ponds, vegetative swales, etc., that reduce the pollutants in storm water discharges and authorized non-storm water discharges.

9. *Annual Comprehensive Site Compliance Evaluation*

The discharger shall conduct one comprehensive site compliance evaluation in each reporting period (July 1-June 30). Evaluations shall be conducted within 8-16 months of each other. The SWPPP shall be revised, as appropriate, and the revisions implemented within 90 days of the evaluation. Evaluations shall include the following:

a. A review of all visual observation records, inspection records, and sampling and analysis results.

b. A visual inspection of all potential pollutant sources for evidence of, or the potential for, pollutants entering the drainage system.

c. A review and evaluation of all BMPs (both structural and non-structural) to determine whether the BMPs are adequate, properly implemented and maintained, or whether additional BMPs are needed. A visual inspection of equipment needed to implement the SWPPP, such as spill response equipment, shall be included.

d. An evaluation report that includes, (1) identification of personnel performing the evaluation, (2) the date(s) of the evaluation, (3) necessary SWPPP revisions, (4) schedule, as required in Section 10.e, below, for implementing SWPPP revisions, (5) any incidents of non-compliance and the corrective actions taken, and (6) a certification that the discharger is in compliance with Order No. R8-2009-0021. If the above certification cannot be provided, explain in the evaluation report why the discharger is not in compliance with this order. The evaluation report shall be submitted as part of the annual report, retained for at least five years, and signed and certified in accordance with Attachment D, Standard Provision, Section V Reporting, Subsection B. Signatory and Certification Requirements of Order No. R8-2009-0021.

10. *SWPPP General Requirements*

a. The SWPPP shall be retained on site and made available upon request by a representative of the Regional Water Board and/or local storm water management agency (local agency) which receives the storm water discharges.

b. The Regional Water Board and/or local agency may notify the discharger when the SWPPP does not meet one or more of the minimum requirements of this section. As requested by the Regional Water Board and/or local agency, the discharger shall submit a SWPPP revision and implementation schedule that meets the minimum requirements of this section to the Regional Water Board and/or local agency that requested the SWPPP revisions. Within 14 days after implementing the required SWPPP revisions, the discharger shall provide written certification to the Regional Water Board and/or local agency that the revisions have been implemented.

c. The SWPPP shall be revised, as appropriate, and implemented prior to changes in industrial activities which (1) may significantly increase the quantities of pollutants in storm water discharge, (2) cause a new area of industrial activity at the facility to be exposed to storm water, or (3) begin an industrial activity which would introduce a new pollutant source at the facility.

d. The SWPPP shall be revised and implemented in a timely manner, but in no case more than 90 days after a discharger determines that the SWPPP is in violation of any requirement(s) of Order No. R8-2009-0021.

e. When any part of the SWPPP is infeasible to implement by the deadlines specified in Order No. R8-2009-0021, due to proposed significant structural changes, the discharger shall submit a report to the Regional Water Board prior to the applicable deadline that (1) describes the portion of the SWPPP that is infeasible to implement by the deadline, (2) provides justification for a time extension, (3) provides a schedule for completing and implementing that portion of the SWPPP, and (4) describes the BMPs that will be implemented in the interim period to reduce or prevent pollutants in storm water discharges and authorized non-storm water discharges. Such reports are subject to Regional Water Board approval and/or modifications. The discharger shall provide written notification to the Regional Water Board within 14 days after the SWPPP revisions are implemented.

f. The SWPPP shall be provided, upon request, to the Regional Water Board. The SWPPP is considered a report that shall be available to the public by the Regional Water Board under Section 308(b) of the Clean Water Act.

## TABLE A

## FIVE PHASES FOR DEVELOPING AND IMPLEMENTING INDUSTRIAL STORM WATER POLLUTION PREVENTION PLANS

**PLANNING AND ORGANIZATION**

*Form pollution prevention team
*Review other plans

**ASSESSMENT PHASE**

*Develop a site map
*Identify potential pollutant sources
*Inventory of materials and chemicals
*List significant spills and leaks
*Identify non-storm water discharges
*Assess pollutant risks

**BEST MANAGEMENT PRACTICES IDENTIFICATION PHASE**

*Non-structural BMPs
*Structural BMPs
*Select activity and site-specific BMPs

**IMPLEMENTATION PHASE**

*Train employees
*Implement BMPs
*Conduct record keeping and reporting

**EVALUATION / MONITORING**

*Conduct annual site evaluation
*Review monitoring information
*Evaluate BMPs
*Review and revise SWPPP

**TABLE B**

**EXAMPLE**

**ASSESSMENT OF POTENTIAL POLLUTION SOURCES AND CORRESPONDING BEST MANAGEMENT PRACTICES SUMMARY**

| AREA | ACTIVITY | POLLUTANT SOURCE | POLLUTANT | BEST MANAGEMENT PRACTICES |
|---|---|---|---|---|
| Vehicle & equipment fueling | Fueling | Spills and leaks during delivery | Fuel oil | - Use spill and overflow protection<br>- Minimize run-on of storm water into the fueling area<br>- Cover fueling area<br>- Use dry cleanup methods rather than hosing down area<br>- Implement proper spill prevention control program<br>- Implement adequate preventative maintenance program to prevent tank and line leaks<br>- Inspect fueling areas regularly to detect problems before they occur<br>- Train employees on proper fueling, cleanup, and spill response techniques. |
| | | Spills caused by topping off fuel oil | Fuel oil | |
| | | Hosing or washing down fuel area | Fuel oil | |
| | | Leaking storage tanks | Fuel oil | |
| | | Rainfall running off fueling areas, and rainfall running onto and off fueling area | Fuel oil | |

## ATTACHMENT K – STORMWATER MONITORING AND REPORTING REQUIREMENTS

1. *Implementation Schedule*

The discharger shall continue to implement their existing Stormwater monitoring program and implement any necessary revisions to their Stormwater monitoring program in a timely manner, but in no case later than December 30, 2009. The discharger may use the monitoring results conducted in accordance with their existing Stormwater monitoring program to satisfy the pollutant/parameter reduction requirements in Section 5.c., below, and Sampling and Analysis Exemptions and Reduction Certifications in Section 10, below.

*2.* *Objectives*

The objectives of the monitoring program are to:

a. Ensure that storm water discharges are in compliance with waste discharge requirements specified in Order No. R8-2009-0021.

b. Ensure practices at the facility to reduce or prevent pollutants in storm water discharges and authorized non-storm water discharges are evaluated and revised to meet changing conditions.

c. Aid in the implementation and revision of the SWPPP required by Attachment "J" Stormwater Pollution Prevention Plan of Order No. R8-2009-0021.

d. Measure the effectiveness of best management practices (BMPs) to prevent or reduce pollutants in storm water discharges and authorized non-storm water discharges. Much of the information necessary to develop the monitoring program, such as discharge locations, drainage areas, pollutant sources, etc., should be found in the Storm Water Pollution Prevention Plan (SWPPP). The facility's monitoring program shall be a written, site-specific document that shall be revised whenever appropriate and be readily available for review by employees or Regional Water Board inspectors.

3. *Non-Storm Water Discharge Visual Observations*

a. The discharger shall visually observe all drainage areas within their facility for the presence of unauthorized non-storm water discharges;

b. The discharger shall visually observe the facility's authorized non-storm water discharges and their sources;

c. The visual observations required above shall occur quarterly, during daylight hours, on days with no storm water discharges, and during scheduled facility operating hours[1]. Quarterly visual observations shall be conducted in each of the following periods: January-March, April-June, July-September, and October-December. The discharger shall conduct quarterly visual observations within 6-18 weeks of each other.

d. Visual observations shall document the presence of any discolorations, stains, odors, floating materials, etc., as well as the source of any discharge. Records shall be maintained of the visual observation dates, locations observed, observations, and response taken to eliminate unauthorized non-storm water discharges and to reduce or prevent pollutants from contacting non-storm water discharges. The SWPPP shall be revised, as necessary, and implemented in accordance with Attachment "J" Stormwater Pollution Prevention Plan Requirements of Order No. R8-2009-0021.

4. *Storm Water Discharge Visual Observations*

a. With the exception of those facilities described in Section 4.d., below, the discharger shall visually observe storm water discharges from one storm event per month during the wet season (October 1-May 30). These visual observations shall occur during the first hour of discharge and at all discharge locations. Visual observations of stored or contained storm water shall occur at the time of release.

b. Visual observations are only required of storm water discharges that occur during daylight hours that are preceded by at least three (3) working days[2] without storm water discharges and that occur during scheduled facility operating hours.

c. Visual observations shall document the presence of any floating and suspended material, oil and grease, discolorations, turbidity, odor, and source of any pollutants. Records shall be maintained of observation dates, locations observed, observations, and response taken to reduce or prevent pollutants in storm water discharges. The SWPPP shall be revised, as necessary, and implemented in accordance with Attachment "J" Stormwater Pollution Prevention Plan Requirements of Order No. R8-2009-0021.

---

1 *"Scheduled facility operating hours" are the time periods when the facility is staffed to conduct any function related to industrial activity, but excluding time periods where only routine maintenance, emergency response, security, and/or janitorial services are performed.*

2 *Three (3) working days may be separated by non-working days such as weekends and holidays provided that no storm water discharges occur during the three (3) working days and the non-working days.*

d. The discharger with storm water containment facilities shall conduct monthly inspections of their containment areas to detect leaks and ensure maintenance of adequate freeboard. Records shall be maintained of the inspection dates, observations, and any response taken to eliminate leaks and to maintain adequate freeboard.

*5.* *Sampling and Analysis*

a. The discharger shall collect storm water samples during the first hour of discharge from (1) the first storm event of the wet season, and (2) at least one other storm event in the wet season. All storm water discharge locations shall be sampled. Sampling of stored or contained storm water shall occur at the time the stored or contained storm water is released. The discharger that does not collect samples from the first storm event of the wet season are still required to collect samples from two other storm events of the wet season and shall explain in the "Annual Stormwater Report" (see Section 12, below) why the first storm event was not sampled.

b. Sample collection is only required of storm water discharges that occur during scheduled facility operating hours and that are preceded by at least (3) three working days without storm water discharge.

c. The samples shall be analyzed for:

1) Total suspended solids (TSS) pH, specific conductance, and total organic carbon (TOC). Oil and grease (O&G) may be substituted for TOC;

2) Toxic chemicals and other pollutants that are likely to be present in storm water discharges in significant quantities. If these pollutants are not detected in significant quantities after two consecutive sampling events, the discharger may eliminate the pollutant from future sample analysis until the pollutant is likely to be present again;

3) The discharger is not required to analyze a parameter when either of the two following conditions are met: (a) the parameter has not been detected in significant quantities from the last two consecutive sampling events, or (b) the parameter is not likely to be present in storm water discharges and authorized non-storm water discharges in significant quantities based upon the discharger's evaluation of the facilities industrial activities, potential pollutant sources, and SWPPP; and

4) Other parameters as required by the Regional Water Board.

6. *Sample Storm Water Discharge Locations*

a. The discharger shall visually observe and collect samples of storm water discharges from all drainage areas that represent the quality and quantity of the facility's storm water discharges from the storm event.

b. If the facility's storm water discharges are commingled with run-on from surrounding areas, the discharger should identify other visual observation and sample collection locations that have not been commingled by run-on and that represent the quality and quantity of the facility's storm water discharges from the storm event.

c. If visual observation and sample collection locations are difficult to observe or sample (e.g., sheet flow, submerged outfalls), the discharger shall identify and collect samples from other locations that represent the quality and quantity of the facility's storm water discharges from the storm event.

d. The discharger that determines that the industrial activities and BMPs within two or more drainage areas are substantially identical may either (1) collect samples from a reduced number of substantially identical drainage areas, or (2) collect samples from each substantially identical drainage area and analyze a combined sample from each substantially identical drainage area. The discharger must document such a determination in the annual Stormwater report.

7. Visual Observation and Sample Collection Exceptions

The discharger is required to be prepared to collect samples and conduct visual observations at the beginning of the wet season (October 1) and throughout the wet season until the minimum requirements of Sections 4. and 5., above, are completed with the following exceptions:

a. The discharger is not required to collect a sample and conduct visual observations in accordance with Section 4 and Section 5, above, due to dangerous weather conditions, such as flooding, electrical storm, etc., when storm water discharges begin after scheduled facility operating hours or when storm water discharges are not preceded by three working days without discharge. Visual observations are only required during daylight hours. The discharger that does not collect the required samples or visual observations during a wet season due to these exceptions shall include an explanation in the "Annual Stormwater Report" why the sampling or visual observations could not be conducted.

b. The discharger may conduct visual observations and sample collection more than one hour after discharge begins if the discharger determines that the objectives of this section will be better satisfied. The discharger shall include an explanation in the "Annual Stormwater Report" why the visual observations and sample collection should be conducted after the first hour of discharge.

8. *Alternative Monitoring Procedures*

The discharger may propose an alternative monitoring program that meets Section 2, above, monitoring program objectives for approval by the Regional Water Board's Executive Officer. The discharger shall continue to comply with the monitoring requirements of this section and may not implement an alternative monitoring plan until the alternative monitoring plan is approved by the Regional Water Board's Executive Officer. Alternative monitoring plans are subject to modification by the Regional Water Board's Executive Officer.

*9. Monitoring Methods*

a. The discharger shall explain how the facility's monitoring program will satisfy the monitoring program objectives of Section 2., above. This shall include:

1) Rationale and description of the visual observation methods, location, and frequency;

2) Rationale and description of the sampling methods, location, and frequency; and

3) Identification of the analytical methods and corresponding method detection limits used to detect pollutants in storm water discharges. This shall include justification that the method detection limits are adequate to satisfy the objectives of the monitoring program.

b. All sampling and sample preservation shall be in accordance with the current edition of "Standard Methods for the Examination of Water and Wastewater" (American Public Health Association). All monitoring instruments and equipment (including the discharger's own field instruments for measuring pH and Electro-conductivity) shall be calibrated and maintained in accordance with manufacturers' specifications to ensure accurate measurements. All laboratory analyses must be conducted according to test procedures under 40 CFR Part 136, unless other test procedures have been specified in Order No. R8-2009-0021 or by the Regional Water Board's Executive Officer. All metals shall be reported as total recoverable metals or unless otherwise specified in Order No. R8-2009-0021. With the exception of analysis conducted by the discharger, all laboratory analyses shall be conducted at a laboratory certified for such analyses by the State Department of Health Services. The discharger may conduct their own sample analyses if the discharger has sufficient capability (qualified employees, laboratory equipment, etc.) to adequately perform the test procedures.

10. *Sampling and Analysis Exemptions and Reductions*

A discharger who qualifies for sampling and analysis exemptions, as described below in Section 10.a.(1) or who qualifies for reduced sampling and analysis, as described below in Section 10.b., must submit the appropriate certifications and required documentation to the Regional Water Board prior to the wet season (October 1) and certify as part of the annual Stormwater report submittal. A discharger that qualifies for either the Regional Water Board or local agency certification programs, as described below in Section 10.a.(2) and (3), shall submit certification and documentation in accordance with the requirements of those programs. The discharger who provides certification(s) in accordance with this section are still required to comply with all other monitoring program and reporting requirements. The discharger shall prepare and submit their certification(s) using forms and instructions provided by the State Water Board, Regional Water Board, or local agency or shall submit their information on a form that contains equivalent information. The discharger whose facility no longer meets the certification conditions must notify the Regional Water Board's Executive Officer (and local agency) within 30 days and immediately comply with Section 5., Sampling and Analysis requirements. Should a Regional Water Board (or local agency) determine that a certification does not meet the conditions set forth below, the discharger must immediately comply with the Section 5., Sampling and Analysis requirements.

a. Sampling and Analysis Exemptions

A discharger is not required to collect and analyze samples in accordance with Section 5., above, if the discharger meets all of the conditions of one of the following certification programs:

1) No Exposure Certification (NEC)

This exemption is designed primarily for those facilities where all industrial activities are conducted inside buildings and where all materials stored and handled are not exposed to storm water. To qualify for this exemption, the discharger must certify that their facilities meet all of the following conditions:

a) All prohibited non-storm water discharges have been eliminated or otherwise permitted.

b) All authorized non-storm water discharges have been identified and addressed in the SWPPP.

c) All areas of past exposure have been inspected and cleaned, as appropriate.

d) All significant materials related to industrial activity (including waste materials) are not exposed to storm water or authorized non-storm water discharges.

e) All industrial activities and industrial equipment are not exposed to storm water or authorized non-storm water discharges.

f) There is no exposure of storm water to significant materials associated with industrial activity through other direct or indirect pathways such as from industrial activities that generate dust and particulates.

g) There is periodic re-evaluation of the facility to ensure conditions (a), (b), (d), (e), and (f) above are continuously met. At a minimum, re-evaluation shall be conducted once a year.

2) Regional Water Board Certification Programs

The Regional Water Board may grant an exemption to the Section 5. Sampling and Analysis requirements if it determines a discharger has met the conditions set forth in a Regional Water Board certification program. Regional Water Board certification programs may include conditions to (a) exempt the discharger whose facilities infrequently discharge storm water to waters of the United States, and (b) exempt the discharger that demonstrate compliance with the terms and conditions of Order No. R8-2009-0021.

3) Local Agency Certifications

A local agency may develop a local agency certification program. Such programs must be approved by the Regional Water Board. An approved local agency program may either grant an exemption from Section 5. Sampling and Analysis requirements or reduce the frequency of sampling if it determines that a discharger has demonstrated compliance with the terms and conditions of the Industrial Activities Storm Water General Permit Order No. 97-03-DWQ which was adopted by the State Water Resources Control Board on April 17, 1997.

b. Sampling and Analysis Reduction

1) A discharger may reduce the number of sampling events required to be sampled for the remaining term of Order No. R8-2009-0021 if the discharger provides certification that the following conditions have been met:

a) The discharger has collected and analyzed samples from a minimum of six storm events from all required drainage areas;

b) All prohibited non-storm water discharges have been eliminated or otherwise permitted;

c) The discharger demonstrates compliance with the terms and conditions of the Order No. R8-2009-0021 for the previous two years (i.e., completed Annual Stormwater Reports, performed visual observations, implemented appropriate BMPs, etc.);

d) The discharger demonstrates that the facility's storm water discharges and authorized non-storm water discharges do not contain significant quantities of pollutants; and

e) Conditions (b), (c), and (d) above are expected to remain in effect for a minimum of one year after filing the certification.

2) Unless otherwise instructed by the Regional Water Board, the discharger shall collect and analyze samples from two additional storm events during the remaining term of Order No. R8-2009-0021 in accordance with Table A, below. The discharger shall collect samples of the first storm event of the wet season. The discharger that does not collect samples from the first storm event of the wet season shall collect samples from another storm event during the same wet season. The discharger that does not collect a sample in a required wet season shall collect the sample from another storm event in the next wet season. The discharger shall explain in the "Annual Stormwater Report" why the first storm event of a wet season was not sampled or a sample was not taken from any storm event in accordance with the Table A schedule, below.

**Table A. REDUCED MONITORING SAMPLING SCHEDULE**

| Discharger Filing Sampling Reduction Certification By | Samples Shall be Collected and Analyzed in these wet seasons | |
|---|---|---|
| | Sample 1 | Sample 2 |
| Sept. 1, 2008 | Oct. 1, 2008-May 31, 2009 | Oct. 1, 2008-May 31, 2009 |
| Sept. 1, 2009 | Oct. 1, 2009-May 31, 2010 | Oct. 1, 2009-May 31, 2010 |
| Sept. 1, 2010 | Oct. 1, 2010-May 31, 2011 | Oct. 1, 2010-May 31, 2011 |
| Sept. 1, 2011 | Oct. 1, 2011-May 31, 2012 | Oct. 1, 2011-May 31, 2012 |
| Sept. 1, 2012 | Oct. 1, 2012-May 31, 2013 | Oct. 1, 2012-May 31, 2013 |
| Sept. 1, 2013 | Oct. 1, 2013-May 31, 2014 | Oct. 1, 2013-May 31, 2014 |

## *11. Records*

Records of all storm water monitoring information and copies of all reports (including the Annual Stormwater Reports) required by Order No. R8-2009-0021 shall be retained for a period of at least five years. These records shall include:

a. The date, place, and time of site inspections, sampling, visual observations, and/or measurements;

b. The individual(s) who performed the site inspections, sampling, visual observations, and or measurements;

c. Flow measurements or estimates;

d. The date and approximate time of analyses;

e. The individual(s) who performed the analyses;

f. Analytical results, method detection limits, and the analytical techniques or methods used;

g. Quality assurance/quality control records and results;

h. Non-storm water discharge inspections and visual observations and storm water discharge visual observation records (see Sections 3. and 4., above);

i. Visual observation and sample collection exception records (see Section 5.a, 6.d, 7, and 10.b.(2), above;

j. All calibration and maintenance records of on-site instruments used;

k. All Sampling and Analysis Exemption and Reduction certifications and supporting documentation (see Section 10);

l. The records of any corrective actions and follow-up activities that resulted from the visual observations.

### *12. Annual Report*

The discharger shall submit an Annual Stormwater Report by July 1 of each year to the Executive Officer of the Regional Water Board and to the local agency (if requested). The report shall include a summary of visual observations and sampling results, an evaluation of the visual observation and sampling and analysis results, laboratory reports, the Annual Comprehensive Site Compliance Evaluation Report required in Section 9. of Attachment "J" of Order No. R8-2009-0021, an explanation of why a facility did not implement any activities required by Order No. R8-2009-0021 (if not already included in the Evaluation Report), and records specified in Section 11., above. The method detection limit of each analytical parameter shall be included. Analytical results that are less than the method detection limit shall be reported as "less than the method detection limit". The Annual Stormwater Report shall be signed and certified in accordance with Attachment D. Federal Standard Provisions, Section V-Reporting, Subsection B. Signatory and Certification requirements of Order No. R8-2009-0021. The discharger shall prepare and submit their Annual Stormwater Reports using the annual report forms provided by the State Water Board or Regional Water Board or shall submit their information on a form that contains equivalent information.

### *13. Watershed Monitoring Option*

Regional Water Boards may approve proposals to substitute watershed monitoring for some or all of the requirements of this section if the Regional Water Board finds that the watershed monitoring will provide substantially similar monitoring information in evaluating discharger compliance with the requirements of Order No. R8-2009-0021.

# ATTACHMENT L – CHINO BASIN MAXIMUM BENEFIT COMMITMENTS

**Table 5-8a of Resolution No. R8-2004-0001**

**Chino Basin Maximum Benefit Commitments**

| Description of Commitment | Compliance Date – as soon as possible, but no later than |
|---|---|
| 1. Surface Water Monitoring Program | |
| a. Submit Draft Monitoring Program to Regional Board | a. January 23, 2005 (complied) |
| b. Implement Monitoring Program | b. Within 30 days from date of Regional Board approval of monitoring plan |
| c. Quarterly data report submittal | c. April 15, July 15, October 15, January 15 |
| d. Annual data report submittal | d. February 15th |
| 2. Groundwater Monitoring Program | |
| a. Submit Draft Monitoring Program to Regional Board | a. January 23, 2005(complied) |
| b. Implement Monitoring Program | b. Within 30 days from date of Regional Board approval of monitoring plan |
| c. Annual data report submittal | c. February 15th |
| 3. Chino Desalters | |
| a. Chino 1 desalter expansion to 10 MGD | a. Prior to recharge of recycled water |
| b. Chino 2 desalter at 10 MGD design | b. Recharge of recycled water allowed once award of contract and notice to proceed issued for construction of desalter treatment plant |
| 4. Future desalters plan and schedule submittal | October 1, 2005 Implement plan and schedule upon Regional Board approval |
| 5. Recharge facilities (17) built and in operation | June 30, 2005 (Partially complied) |
| 6. IEUA wastewater quality improvement plan and schedule submittal | 60 days after agency-wide 12 month running average effluent TDS quality equals or exceeds 545 mg/L for 3 consecutive months or agency-wide 12 month running average TIN equals or exceeds 8 mg/L in any month.<br><br>Implement plan and schedule upon approval by Regional Board |

**Table 5-8a of Resolution No. R8-2004-0001**

## Chino Basin Maximum Benefit Commitments (cont.)

| Description of Commitment | Compliance Date – as soon as possible, but no later than |
|---|---|
| 7. Recycled water will be blended with other recharge sources so that the 5-year running average TDS and nitrate-nitrogen concentrations of water recharged are equal to or less than the "maximum benefit" water quality objectives for the affected Management Zone (Chino North or Cucamonga). | Compliance must be achieved by end of 5th year after initiation of recycled water recharge operations. |
| a. Submit a report that documents the location, amount of recharge, and TDS and nitrogen quality of stormwater recharge before the OBMP recharge improvements were constructed and what is projected to occur after the recharge improvements are completed | a. Prior to initiation of recycled water recharge |
| b. Submit documentation of amount, TDS and nitrogen quality of all sources of recharge and recharge locations. For stormwater recharge used for blending, submit documentation that the recharge is the result of CBW/IEUA enhanced recharge facilities. | b. Annually, by February 15th, after initiation of construction of basins/other facilities to support enhanced stormwater recharge. |
| 8. Hydraulic Control Failure | |
| a. Plan and schedule to correct loss of hydraulic control | a. 60 days from Regional Board finding that hydraulic control is not being maintained |
| b. Achievement and maintenance of hydraulic control | b. In accordance with plan and schedule approved by Regional Board. The schedule shall assure that hydraulic control is achieved as soon as possible but no later than 180 days after loss of hydraulic control is identified. |
| c. Mitigation plan for temporary failure to achieve/maintain hydraulic control | c. By January 23, 2005(complied). Implement plan upon Regional Board determination that hydraulic control is not being maintained. |
| 9. Ambient groundwater quality determination | July 1, 2005 and every 3 years thereafter |