Linda S. Adams
Acting Secretary for
Environmental Protection

CALIFORNIA REGIONAL WATER QUALITY CONTROL BOARD
SAN DIEGO REGION

9174 Sky Park Court, Suite 100, San Diego, CA 92123-4340
Phone (858) 467-2952 • Fax (858) 571-6972
http://www.waterboards.ca.gov/sandiego/

Edmund G. Brown Jr.
Governor

ORDER NO. R9-2011-0016 AS AMENDED BY ORDER NOS. R9-2012-0042 AND R9-2012-0060
NPDES NO. CA0107433

WASTE DISCHARGE REQUIREMENTS FOR THE CITY OF OCEANSIDE SAN LUIS REY WATER RECLAMATION FACILITY, LA SALINA WASTEWATER TREATMENT PLANT, AND MISSION BASIN DESALTING FACILITY DISCHARGES TO THE PACIFIC OCEAN VIA THE OCEANSIDE OCEAN OUTFALL

The following Discharger is subject to waste discharge requirements as set forth in this Order:

Table 1. Discharger and Facility Information

Discharger	City of Oceanside	
Name of Facility	Oceanside Ocean Outfall (OOO)	
Facility Addresses	San Luis Rey Water Reclamation Facility	3950 N. River Rd Oceanside, CA 92058
	La Salina Wastewater Treatment Plant	1330 S. Tait Street Oceanside, CA 92054
	Mission Basin Desalting Facility	Fireside & Heritage Street Oceanside, CA 92054
The U.S. Environmental Protection Agency (USEPA) and the California Regional Water Quality Control Board, San Diego Region have classified this discharge as a **major** discharge.		

Discharges by the City of Oceanside from the Facilities listed in Table 1 at the discharge point identified in Table 2 are subject to waste discharge requirements as set forth in this Order:

Table 2. Discharge Location

Discharge Point No.	Effluent Description	Discharge Point Latitude	Discharge Point Longitude	Receiving Water
001	POTW effluent and waste brine	33º 09’ 46” N	117º 23’ 29” W	Pacific Ocean

Table 3. Administrative Information

This Order was adopted by the California Regional Water Quality Control Board, San Diego Region on:	**January 12, 2011**
This Order shall become effective on:	**March 3, 2011**
This Order shall expire on:	**March 2, 2016**
The Discharger shall file a Report of Waste Discharge in accordance with Title 23, California Code of Regulations, not later than 180 days in advance of the Order expiration date as application for issuance of new waste discharge requirements.	

I, David W. Gibson, Executive Officer, do hereby certify that this Order with all attachments is a full, true, and correct copy of an Order adopted by the California Regional Water Quality Control Board, San Diego Region, on January 12, 2011 and amended on June 13, 2012 and November 13, 2012.

David W. Gibson
Executive Officer

Table of Contents

I. Facility Information ..... 4~~4~~
II. Findings ..... 4~~5~~
III. Discharge Prohibitions ..... 12~~12~~
IV. Effluent Limitations and Discharge Specifications ..... 13~~13~~
A. Effluent Limitations and Performance Goals – Discharge Point No. 001 ..... 13~~13~~
B. Land Discharge Specifications – Not Applicable ..... 21~~21~~
C. Reclamation Specifications ..... 21~~21~~
V. Receiving Water Limitations ..... 22~~22~~
A. Surface Water Limitations ..... 22~~22~~
B. Groundwater Limitations – Not Applicable ..... 24~~24~~
VI. Provisions ..... 24~~24~~
A. Standard Provisions ..... 24~~24~~
B. Monitoring and Reporting Program (MRP) Requirements ..... 26~~26~~
C. Special Provisions ..... 26~~26~~
1. Reopener Provisions ..... 26~~26~~
2. Special Studies, Technical Reports and Additional Monitoring Requirements ..... 27~~27~~
3. Best Management Practices and Pollution Prevention – Not Applicable ..... 30~~30~~
4. Construction, Operation and Maintenance Specifications – Not Applicable ..... 30~~30~~
5. Special Provisions for Wastewater Facilities (POTWs Only) ..... 30~~30~~
6. Other Special Provisions – Not Applicable ..... 38~~38~~
7. Compliance Schedules ..... 38~~38~~
VII. Compliance Determination ..... 40~~40~~

List of Tables

Table 1. Discharger and Facility Information 1
Table 2. Discharge Location 1
Table 3. Administrative Information 2
Table 4. Facility Information ..... 4~~4~~
Table 5. Basin Plan Beneficial Uses of the Pacific Ocean ..... 8~~8~~
Table 6. Ocean Plan Beneficial Uses of the Pacific Ocean ..... 9~~9~~
Table 7. SLRWRF Effluent Limitations at M-001 ..... 14~~14~~
Table 8. LSWTP Effluent Limitations at M-002 ..... 15~~15~~
Table 9. Effluent Limitations at M-003 ..... 15~~15~~
Table 10. Effluent Limitations at M-004 ..... 16~~16~~
Table 11. Performance Goals ..... 18~~18~~
Table 12. Time Schedule for Compliance with Bacterial Characteristics ..... 39~~39~~

List of Attachments

Attachment A – Definitions ..... A-1~~A-1~~
Attachment B – Map ..... B-1~~B-1~~
Attachment C – Flow Schematic ..... C-1~~C-1~~
Attachment D – Standard Provisions ..... D-1~~D-1~~
Attachment E – Monitoring and Reporting Program ..... E-1~~E-1~~
Attachment F – Fact Sheet ..... F-1~~F-1~~
Attachment G – Discharge Prohibitions contained in the Ocean Plan and Basin Plan ..... G-1~~G-1~~

I. FACILITY INFORMATION

The following Discharger is subject to waste discharge requirements as set forth in this Order:

Table 4. Facility Information

Discharger	City of Oceanside	
Name of Facility	Oceanside Ocean Outfall	
Facility Address	**San Luis Rey Water Reclamation Facility**	3950 N. River Rd Oceanside, CA 92058 San Diego County
	La Salina Wastewater Treatment Plant	1330 S. Tait Street Oceanside, CA 92054 San Diego County
	Mission Basin Desalting Facility	Fireside & Heritage Street Oceanside, CA 92054
Facility Contact, Title, and Phone	Mark Anderson, Water Utilities Division Manager, (760) 435-5957	
Mailing Address	300 N. Coast Highway, Oceanside, CA 92054	
Type of Facility	Publicly Owned Treatment Works (POTW)	
Facility Permitted Discharge Flow Rate (average monthly flow)	• San Luis Rey Water Reclamation Facility (SLRWRF) - 13.5 million gallons per day (MGD) discharge to the OOO through the land outfall; or up to 15.4 MGD if written authorization is obtained from the San Diego Water Board pursuant to section VI.C.5.a.ii. of this Order. • La Salina Wastewater Treatment Plant (LSWTP) - 5.5 MGD • Mission Basin Desalting Facility (MBDF) – 2.0 MGD • Combined discharge to the Oceanside Ocean Outfall, including discharges from the SLRWRF, LSWTP, MBDF, Genentech, Fallbrook Public Utility District (PUD), and US Marine Corps Camp Pendleton[1] – 22.6 MGD; however the permitted combined discharge flow rate to the Oceanside Ocean Outfall from the SLRWRF, LSWTP, MBDF, Genentech, Fallbrook Public Utility District, and US Marine Corps Camp Pendleton may be increased to 23.1 MGD, 23.4 MGD, or 24.4 MGD if written authorization is obtained from the San Diego Water Board pursuant to section VI.C.5.a.i of this Order.	

1. Discharges from Genentech, Fallbrook PUD, and the US Marine Corps Camp Pendleton to the Oceanside Ocean Outfall are regulated under separate waste discharge requirements/NPDES permits.

II. FINDINGS

The California Regional Water Quality Control Board, San Diego Region (hereinafter San Diego Water Board), finds:

A. Background. The City of Oceanside (hereinafter Discharger) is currently discharging pursuant to Order No. R9-2005-0136 and National Pollutant Discharge Elimination System (NPDES) Permit No. CA0107433. The Discharger submitted a Report of Waste Discharge (ROWD), dated February 9, 2010, and applied for a NPDES permit renewal to discharge up to 22.9 MGD of treated wastewater to the Oceanside Ocean Outfall

(OOO) from the San Luis Rey Water Reclamation Facility (SLRWRF), the La Salina Wastewater Treatment Plant (SLWTP), and waste brine from the Mission Basin Desalting Facility (MBDF), hereinafter Facility. The application was deemed complete on March 11, 2010.

B. Facility Description. The Discharger owns and operates the SLRWRF and the LSWTP. Both facilities are publicly owned treatment works (POTW) as defined in 40 CFR 403.3. The Discharger provides municipal wastewater treatment services to a population of approximately 180,000 within the boundaries of the City of Oceanside, treating primarily residential and commercial wastewater. Additionally, the SLRWRF serves a population of approximately 1,000 within the City of Vista and a population of approximately 10,000 within the Rainbow Municipal Water District on a contractual basis. There are nine significant industrial users within the City of Oceanside and none within the portions of the City of Vista and Rainbow Municipal Water District that are served by the Discharger.

Wastewater treatment processes at the SLRWRF and LSWTP include preliminary treatment by mechanical bar screens, aerated grit removal, flow equalization, primary sedimentation, biological secondary treatment using activated sludge process, secondary sedimentation/clarification, and secondary effluent equalization ponds (SLRWRF only). SLRWRF and LSWTP screenings and grit are removed and hauled to a landfill. Sludge from the primary treatment facilities is thickened in the clarifiers. Sludge from the secondary treatment facilities is thickened by gravity belt thickeners at the SLRWRF and by dissolved air floatation at the LSWTP. Both sludges are anaerobically digested and dewatered. Dewatered sludge is hauled to a land application site by a contractor. The SLRWRF produces up to 0.7 MGD of tertiary recycled water, the discharge of which is covered under separate waste discharge requirements.

The Discharger also owns and operates the MBDF, which produces up to 6.37 MGD of potable water. The MBDF pumps groundwater from the Mission hydrologic subarea (903.11), of the Lower San Luis hydrologic area (903.1), of the San Luis Rey hydrologic unit (903). The groundwater is treated using cartridge filtration, green sand filtration to remove iron and manganese, reverse osmosis, and granular activated carbon. The cartridge filters are removed and hauled to a landfill. The green sand filters are backwashed using potable water and this backwash water is discharged to the sanitary sewer system. The two reverse osmosis trains discharge up to 2.0 MGD of brine to the OOO.

Secondary treated wastewater from the SLRWRF discharges to a 34,000-foot-long 24-inch-/36-inch-diameter land outfall. Brine discharges from Genentech (regulated under separate waste discharge requirements and NPDES Permit) and MBDF commingle with the discharge in the land outfall via a 10-inch-diameter pipe, prior to the LSWTP. At the LSWTP discharges from SLRWRF, MBDF, and Genentech commingle with the discharge from LSWTP and the discharge of treated wastewater effluent from the Fallbrook Public Utility District POTW (regulated under separate waste discharge requirements and NPDES Permit). The flow then commingles with the discharge of treated wastewater from US Marine Corps Base Camp Pendleton (regulated under

separate waste discharge requirements and NPDES Permit) at the near-shore end of the Discharger-owned OOO. As the owner/operator, the Discharger has the ability to control discharges to the OOO. See Attachment C of this Order, page C-4 for the location of the outfall pipelines and connections at LSWTP.

Treated wastewaters from SLRWTP and LSWTP and waste brine from MBDF are hereinafter collectively referred to as Effluent. Treated wastewaters from SLRWTP, LSWTP, Fallbrook Public Utility District, and US Marine Corps Base Camp Pendleton and waste brine from MBDF and Genentech are hereinafter collectively referred to as Combined Effluent.

Attachment B of this Order provides maps of the area around the Facility, land outfall pipelines, and the OOO. Attachment C of this Order provides flow schematics of the Facility (SLRWRF, LSWTP, and MBDF) and the land outfall pipelines at LWSTP.

Historically the Discharger has had a total flow limitation for the OOO of 22.9 MGD for LSWTP, SLWTP and the MBDF. An additional 6.155 MGD of capacity is allocated to Fallbrook Public Utility District, US Marine Corps Base Camp Pendleton, and Genentech (formerly Biogen IDEC Pharmaceuticals Corporation) (for a total of 29.055 MGD). However, in the Discharger's 2010 Ocean Outfall Capacity Evaluation Report, the Discharger reported that current OOO capacity was 22.6 MGD due to a buildup of muck and sediment within the outfall, and the finding that the internal dimension of the OOO is actually 35.75 inches, not 36 inches. This represents a significant reduction in available flow capacity through the OOO (from 30 MGD). Combined Effluent flow through the OOO must be limited based on its capacity to transfer Combined Effluent safely to the receiving water. Thus, Combined Effluent flow from the Facility (SLRWRF, LSWTP, and MBDF), Genentech, Fallbrook Public Utility District, and US Marine Corps Base Camp Pendleton through the OOO shall be limited to 22.6 MGD.

In the ROWD the Discharger reported that OOO capacity may be increased from 22.6 MGD to 23.4 MGD if the muck from within the OOO is cleaned. The Discharger further stated that preliminary plans to clean the OOO and/or replace a constricting portion of the OOO (the metering section) were being considered. The Discharger stated that the OOO would be cleaned in 2015 which would increase outfall capacity to 23.4 MGD. The Discharger further states that the replacement of the constricting portion of the OOO, where the metering section is located, alone would increase outfall capacity to 23.1 MGD and up to 24.4 MGD when combined with the cleaning of the OOO. As such, Combined Effluent flow to the OOO greater than 22.6 MGD is prohibited until written approval from the San Diego Water Board is provided. Prior to the San Diego Water Board providing written approval to the Discharger to increase Combined Effluent flows to the OOO to 23.1 MGD, 23.4 MGD, or 24.4 MGD, the Discharger must meet the requirements contained in section VI.C.5.a.i of this Order.

In a December 2, 2010 comment to the San Diego Water Board regarding this Order the Discharger stated, "Additionally, the City is planning improvements to the land outfall that will increase the capacity of the land outfall to accommodate the 15.4 maximum 30-day capacity of the SLRWRF. To address the City's current ability to treat more than 13.5 MGD at the SLRWRF using onsite storage, and to address planned improvements

to the capacity of the land outfall, [it is requested that the permit allow for an increase of flow from SLRWRF to the OOO through the land outfall from 13.5 MGD to 15.4 MGD]."

Because the overall discharge volume of the OOO would not be increased and the permitted volume of flow from SLRWRF would not increase (Order No. R9-2005-0136 authorized a discharge of 15.4 MGD even though the land outfall capacity was not sufficient to transport this volume to the OOO), the San Diego Water Board has established conditional requirements to ensure adequate capacity is available in the land outfall prior to allowing the discharge of 15.4 MGD from SLRWRF, as specified in section VI.C.5.a.ii of this Order.

C. **Legal Authorities.** This Order is issued pursuant to section 402 of the federal Clean Water Act (CWA) and implementing regulations adopted by the United States Environmental Protection Agency (USEPA) and chapter 5.5, division 7 of the California Water Code (CWC) (commencing with section 13370). It shall serve as a NPDES permit for point source discharges from this facility to surface waters. This Order also serves as Waste Discharge Requirements (WDRs) pursuant to article 4, chapter 4, division 7 of the CWC (commencing with section 13260).

D. **Background and Rationale for Requirements.** The San Diego Water Board developed the requirements in this Order based on information submitted as part of the application, through monitoring and reporting programs, and other available information. The Fact Sheet (Attachment F), which contains background information and rationale for Order requirements, is hereby incorporated into this Order and constitutes part of the Findings for this Order. Attachments A through E and G are also incorporated into this Order.

E. **California Environmental Quality Act (CEQA).** Under CWC section 13389, this action to adopt an NPDES permit is exempt from the provisions of CEQA, Public Resources Code sections 21100-21177.

F. **Technology-Based Effluent Limitations.** Section 301(b) of the CWA and implementing USEPA permit regulations at section 122.44, title 40 of the Code of Federal Regulations (40 CFR 122.44), require that permits include conditions meeting applicable technology-based requirements at a minimum, and any more stringent effluent limitations necessary to meet applicable water quality standards. The discharge authorized by this Order must meet minimum federal technology-based requirements based on Secondary Treatment Standards at 40 CFR Part 133. 40 CFR Part 133 establishes the minimum weekly and monthly average level of effluent quality attainable by secondary treatment for CBOD5, TSS, and pH. Technology-based effluent limitations contained in Table A of the 2005 *Water Quality Control Plan for Ocean Waters of California, California Ocean Plan* (hereinafter Ocean Plan), which include grease and oil, suspended solids, settleable solids, turbidity, and pH, are also applicable to discharges from POTWs and the MBDF. A detailed discussion of the technology-based effluent limitations development is included in the Fact Sheet (Attachment F of this Order).

G. Water Quality-Based Effluent Limitations. Section 301(b) of the CWA and 40 CFR 122.44(d) require that permits include limitations more stringent than applicable federal technology-based requirements where necessary to achieve applicable water quality standards.

40 CFR 122.44(d)(1)(i) mandates that permits include effluent limitations for all pollutants that are or may be discharged at levels that have the reasonable potential to cause or contribute to an exceedance of a water quality standard, including numeric and narrative objectives within a standard. Where reasonable potential has been established for a pollutant, but there is no numeric criterion or objective for the pollutant, water quality-based effluent limitations (WQBELs) must be established using: (1) USEPA criteria guidance under CWA section 304(a), supplemented where necessary by other relevant information; (2) an indicator parameter for the pollutant of concern; or (3) a calculated numeric water quality criterion, such as a proposed state criterion or policy interpreting the state's narrative criterion, supplemented with other relevant information, as provided in 40 CFR 122.44(d)(1)(vi).

H. Water Quality Control Plans. The San Diego Water Board adopted a *Water Quality Control Plan for the San Diego Region* (hereinafter Basin Plan) on September 8, 1994 that designates beneficial uses, establishes water quality objectives, and contains implementation programs and policies to achieve those objectives for the Pacific Ocean and other receiving waters addressed through the plan. Subsequent revisions to the Basin Plan have also been adopted by the San Diego Water Board and approved by the State Water Resources Control Board (State Water Board). Beneficial uses applicable to the Pacific Ocean specified in the Basin Plan are as follows:

Table 5. Basin Plan Beneficial Uses of the Pacific Ocean

Discharge Point No.	Receiving Water Name	Beneficial Use(s)
001	Pacific Ocean	Industrial service supply; navigation; contact water recreation; non-contact water recreation; commercial and sport fishing; preservation of biological habitats of special significance; wildlife habitat; rare, threatened, or endangered species; marine habitat; aquaculture; migration of aquatic organisms; spawning, reproduction, and/or early development; and shellfish harvesting.

Requirements of this Order implement the Basin Plan.

I. California Ocean Plan. The State Water Board adopted the Ocean Plan in 1972 and amended it in 1978, 1983, 1988, 1990, 1997, 2000, and 2005. The State Water Board adopted the latest amendment on April 21. 2005 and it became effective on February 14, 2006. The Ocean Plan is applicable, in its entirety, to point source discharges to the ocean. The Ocean Plan identifies beneficial uses of ocean waters of the State to be protected as summarized below:

Table 6. Ocean Plan Beneficial Uses of the Pacific Ocean

Discharge Point No.	Receiving Water Name	Beneficial Use
001	Pacific Ocean	Industrial water supply; water contact and non-contact recreation, including aesthetic enjoyment; navigation; commercial and sport fishing; mariculture; preservation and enhancement of designated Areas of Special Biological Significance (ASBS); rare and endangered species; marine habitat; fish migration; fish spawning and shellfish harvesting.

In order to protect the beneficial uses, the Ocean Plan establishes water quality objectives and a program of implementation. Requirements of this Order implement the Ocean Plan.

J. Alaska Rule. On March 30, 2000, USEPA revised its regulation that specifies when new and revised state and tribal water quality standards (WQS) become effective for CWA purposes. (40 CFR 131.21; 65 Fed. Reg. 24641 (April 27, 2000).) Under the revised regulation (also known as the Alaska rule), new and revised standards submitted to USEPA after May 30, 2000, must be approved by USEPA before being used for CWA purposes. The final rule also provides that standards already in effect and submitted to USEPA by May 30, 2000 may be used for CWA purposes, whether or not approved by USEPA.

K. Stringency of Requirements for Individual Pollutants. This Order contains both technology-based effluent limitations and WQBELs for individual pollutants. The technology-based effluent limitations consist of restrictions on 5-day carbonaceous biological oxygen demand ($CBOD_5$), total suspended solids (TSS), pH, oil and grease, settleable solids, and turbidity. Restrictions on these pollutants are discussed in section IV.B of the Fact Sheet (Attachment F of this Order). This Order's technology-based pollutant restrictions implement the minimum, applicable federal technology-based requirements. These limitations are not more stringent than required by the CWA.

WQBELs have been scientifically derived to implement water quality objectives that protect beneficial uses. Both the beneficial uses and the water quality objectives have been approved pursuant to federal law and are the applicable federal water quality standards. The scientific procedures for calculating the individual WQBELs are based on the Ocean Plan, which was approved by USEPA on February 14, 2006. All beneficial uses and water quality objectives contained in the Basin Plan were approved under state law and submitted to and approved by USEPA prior to May 30, 2000. Any water quality objectives and beneficial uses submitted to USEPA prior to May 30, 2000, but not approved by USEPA before that date, are nonetheless "applicable water quality standards for purposes of the CWA" pursuant to 40 CFR 131.21(c)(1). Collectively, this Order's restrictions on individual pollutants are no more stringent than required to implement the requirements of the CWA.

L. Antidegradation Policy. 40 CFR 131.12 requires that the State water quality standards include an antidegradation policy consistent with the federal policy. The State Water Board established California's antidegradation policy in State Water Board Resolution No. 68-16. Resolution No. 68-16 incorporates the federal antidegradation policy where the federal policy applies under federal law. Resolution No. 68-16 requires that existing quality of waters be maintained unless degradation is justified based on specific findings. The San Diego Water Board's Basin Plan implements, and incorporates by reference, both the State and federal antidegradation policies. As discussed in detail in the Fact Sheet (Attachment F of this Order), the permitted discharge is consistent with the antidegradation provision of 40 CFR 131.12 and State Water Board Resolution No. 68-16.

M. Anti-Backsliding Requirements. Sections 402(o)(2) and 303(d)(4) of the CWA and federal regulations at 40 CFR 122.44(l) prohibit backsliding in NPDES permits. These anti-backsliding provisions require effluent limitations in a reissued permit to be as stringent as those in the previous permit, with some exceptions where limitations may be relaxed. Some effluent limitations in this Order are less stringent that those in the previous Order. As discussed in detail in the Fact Sheet (Attachment F of this Order), this relaxation of effluent limitations is consistent with the anti-backsliding requirements of the CWA and federal regulations.

N. Endangered Species Act. This Order does not authorize any act that results in the taking of a threatened or endangered species or any act that is now prohibited, or becomes prohibited in the future, under either the California Endangered Species Act (Fish and Game Code sections 2050 to 2097) or the Federal Endangered Species Act (16 USCA sections 1531 to 1544). This Order requires compliance with effluent limits, receiving water limits, and other requirements to protect the beneficial uses of waters of the State. The Discharger is responsible for meeting all requirements of the applicable Endangered Species Act.

O. Monitoring and Reporting. 40 CFR 122.48 requires that all NPDES permits specify requirements for recording and reporting monitoring results. CWC sections 13267 and 13383 authorizes the San Diego Water Board to require technical and monitoring reports. The Monitoring and Reporting Program (MRP) establishes monitoring and reporting requirements to implement federal and State requirements. This MRP is provided in Attachment E of this Order.

P. Standard and Special Provisions. Standard Provisions, which apply to all NPDES permits in accordance with 40 CFR 122.41, and additional conditions applicable to specified categories of permits in accordance with 40 CFR 122.42, are provided in Attachment D of this Order. The San Diego Water Board has also included in this Order special provisions applicable to the Discharger. A rationale for the special provisions contained in this Order is provided in the Fact Sheet (Attachment F of this Order).

Q. Provisions and Requirements Implementing State Law. Some of the provisions/requirements in subsections VI.C of this Order are included to implement State law only. These provisions/requirements are not required or authorized under the

federal CWA; consequently, violations of these provisions/requirements are not subject to the enforcement remedies that are available for NPDES violations.

R. Notification of Interested Parties. The San Diego Water Board has notified the Discharger and interested agencies and persons of its intent to prescribe Waste Discharge Requirements for the discharge and has provided them with an opportunity to submit their written comments and recommendations. Details of notification are provided in the Fact Sheet (Attachment F of this Order).

S. Consideration of Public Comment. The San Diego Water Board, in a public meeting, heard and considered all comments pertaining to the discharge. Details of the Public Hearing are provided in the Fact Sheet (Attachment F of this Order).

THEREFORE, IT IS HEREBY ORDERED, that Order No. R9-2005-0136 is rescinded upon the effective date of this Order except for enforcement purposes, and, in order to meet the provisions contained in division 7 of the CWC (commencing with section 13000) and regulations adopted thereunder, and the provisions of the federal CWA and regulations and guidelines adopted thereunder, the Discharger shall comply with the requirements in this Order.

III. DISCHARGE PROHIBITIONS

A. The discharge of waste from SLRWRF and LSWTP not treated by a secondary treatment process and not in compliance with the effluent limitations specified in section IV.A of this Order, and/or to a location other than Discharge Point No. 001, unless specifically regulated by this Order or separate waste discharge requirements, is prohibited.

B. The discharge of waste from MBDF not in compliance with the effluent limitations specified in section IV.A of this Order, and/or to a location other than Discharge Point No. 001, unless specifically regulated by this Order or separate waste discharge requirements, is prohibited.

C. The bypassing of untreated wastes containing concentrations of pollutants in excess of those in Tables A or B of the Ocean Plan is prohibited, except as allowed by Federal Standard Provisions I.G and I.H (Attachment D of this Order).

D. The discharge of wastes from the SLRWRF to the OOO through the land outfall in excess of a monthly average effluent flow of 13.5 MGD is prohibited until written notification is provided by the San Diego Water Board stating that the allowable SLRWRF discharge flow has been increased to 15.4 MGD, consistent with the requirements specified in section VI.C.5.a.ii of this Order.

Written notification to increase the allowable flow rate from the SLRWRF to the OOO through the land outfall from 13.5 MGD to 15.4 MGD shall only be granted by the San Diego Water Board Executive Officer when the requirements of section VI.C.5.a.ii of this Order have been achieved and the San Diego Water Board Executive Officer concludes that the available effluent capacity through the land outfall to the OOO is available and properly certified.

E. The discharge of wastes from the LSWTP in excess of a monthly average effluent flow of 5.5 MGD is prohibited.

F. The discharge of wastes from the MBDF in excess of a monthly average effluent flow of 2.0 MGD is prohibited.

G. Combined Effluent (discharge of waste from SLRWRF, LSWTP, MBDF, Genentech, Fallbrook Public Utility District, and US Marine Corps Camp Pendleton) in excess of an average monthly flow rate of 22.6 MGD through the OOO at Discharge Point No. 001 (Monitoring Location M-005, as specified in Attachment E of this Order) is prohibited until written notification is provided by the San Diego Water Board stating that the

Combined Effluent flow to the OOO has been increased consistent with the requirements of section VI.C.5.a.i of this Order. Once written notification has been provided to the Discharger by the San Diego Water Board, Combined Effluent through the OOO at Discharge Point No. 001 (Monitoring Location M-005, as specified in Attachment E of this Order) in excess of the applicable average monthly flow rate is prohibited.

Written notification to increase the allowable flow rate for the OOO from 22.6 MGD shall only be granted by the San Diego Water Board Executive Officer when the requirements of section VI.C.5.a.i of this Order have been achieved and the San Diego Water Board Executive Officer concludes that the available effluent capacity through the OOO is available and properly certified.

IV. EFFLUENT LIMITATIONS AND DISCHARGE SPECIFICATIONS

A. Effluent Limitations and Performance Goals – Discharge Point No. 001

1. Final Effluent Limitations

a. The Discharger shall maintain compliance with the following effluent limitations at Monitoring Locations M-001 (for SLRWRF) and M-002 (for LSWTP) , as described in the attached MRP.

Table 7. SLRWRF Effluent Limitations at M-001

Parameter	Units	Effluent Limitations					
		Average Monthly	Average Weekly	Maximum Daily	Instantaneous Minimum	Instantaneous Maximum	6-Month Median
Carbonaceous Biochemical Oxygen Demand (5-day @ 20°C) ($CBOD_5$)[1]	mg/L	25	40	--	--	--	--
	lbs/day[2]	2,814	4,504	--	--	--	--
	lbs/day[3]	3,211	5,137	--	--	--	--
Total Suspended Solids (TSS)[1]	mg/L	30	45	--	--	--	--
	lbs/day[2]	3,378	5,067	--	--	--	
	lbs/day[3]	3,853	5,780	--	--	--	--
Oil and Grease	mg/L	25	40	--	--	75	--
	lbs/day[2]	2,814	4,504	--	--	8,445	--
	lbs/day[3]	3,211	5,137	--	--	9,633	--
Settleable Solids	ml/L	1.0	1.5	--	--	3.0	--
Turbidity	NTU	75	100	--	--	225	--
pH	standard units	--	--	--	6.0	9.0	--

[1] The average monthly percent removal of $CBOD_5$ and TSS shall not be less than 85 percent.
[2] Applicable when the average monthly permitted flow is prohibited from exceeding 13.5 MGD.
[3] Applicable when the average monthly permitted flow is prohibited from exceeding 15.4 MGD.

Table 8. LSWTP Effluent Limitations at M-002

Parameter	Units	Effluent Limitations					
		Average Monthly	Average Weekly	Maximum Daily	Instantaneous Minimum	Instantaneous Maximum	6-Month Median
Carbonaceous Biochemical Oxygen Demand (5-day @ 20°C) ($CBOD_5$)[1]	mg/L	25	40	--	--	--	--
	lbs/day	1,147	1,835	--	--	--	--
Total Suspended Solids (TSS)[1]	mg/L	30	45	--	--	--	--
	lbs/day	1,376	2,064	--	--	--	--
Oil and Grease	mg/L	25	40	--	--	75	--
	lbs/day	1,147	1,835	--	--	3,440	--
Settleable Solids	ml/L	1.0	1.5	--	--	3.0	--
Turbidity	NTU	75	100	--	--	225	--
pH	standard units	--	--	--	6.0	9.0	--

[1] The average monthly percent removal of $CBOD_5$ and TSS shall not be less than 85 percent.

b. The Discharger shall maintain compliance with the following effluent limitations for the MBDF at Monitoring Location No. M-003, as described in the attached MRP:

Table 9. Effluent Limitations at M-003

Parameter	Units	Effluent Limitations					
		Average Monthly	Average Weekly	Maximum Daily	Instantaneous Minimum	Instantaneous Maximum	6-Month Median
Oil and Grease	mg/L	25	40	--	--	75	--
	lbs/day	417	667	--	--	1,251	--
Total Suspended Solids	mg/L	60	--	--	--		--
pH	standard units	--	--	--	6.0	9.0	--
Settleable Solids	mL/L	1.0	1.5	--	--	3.0	--
Turbidity	NTU	75	100	--	--	225	--

c. The Discharger shall maintain compliance with the following effluent limitations for the total combined flow from SLRWRF, LSWTP, and MBDF at Discharge Point No. 001, with compliance measured at Monitoring Location M-004 as described in the attached MRP:

Table 10. Effluent Limitations at M-004

Parameter	Units	Effluent Limitations					
		Average Monthly	Average Weekly	Maximum Daily	Instantaneous Minimum	Instantaneous Maximum	6-Month Median
OBJECTIVES FOR PROTECTION OF HUMAN HEALTH[1]							
Tributyltin	µg/L	1.2E-01	--	--	--	--	--
	lbs/day[2]	2.3E-02	--	--	--	--	--
	lbs/day[3]	2.3E-02	--	--	--	--	--
	lbs/day[4]	2.4E-02	--	--	--	--	--
	lbs/day[5]	2.4E-02	--	--	--	--	--
TCDD Equivalents[6]	µg/L	3.4E-07	--	--	--	--	--
	lbs/day[2]	6.5E-08	--	--	--	--	--
	lbs/day[3]	6.6E-08	--	--	--	--	--
	lbs/day[4]	6.6E-08	--	--	--	--	--
	lbs/day[5]	6.9E-08	--	--	--	--	--

1 Scientific "E" notation is used to express effluent limitations. In scientific "E" notation, the number following the "E" indicates that position of the decimal point in the value. Negative numbers after the "E" indicate that the value is less than 1, and positive numbers after the "E" indicate that the value is greater than 1. In this notation a value of 6.1E-02 represents 6.1×10^{-2} or 0.061, 6.1E+02 represents 6.1×10^{2} or 610, and 6.1E+00 represents 6.1×10^{0} or 6.1.

2 Applicable while the Combined Effluent flow to the OOO is prohibited from exceeding 22.6 MGD.

3 Applicable while the Combined Effluent flow to the OOO is prohibited from exceeding 23.1 MGD (meter replacement only).

4 Applicable while the Combined Effluent flow to the OOO is prohibited from exceeding 23.4 MGD (line cleaning only).

5 Applicable while the Combined Effluent flow to the OOO is prohibited from exceeding 24.4 MGD (meter replacement and line cleaning).

6 TCDD equivalents represent the sum of concentrations of chlorinated dibenzodioxins (2,3,7,8-CDDs) and chlorinated dibenzofurans (2,3,7,8-CDFs) multiplied by their respective toxicity factors, as shown by the table below. USEPA Method 8280 may be used to analyze TCDD equivalents.

Isomer Group	Toxicity Equivalence Factor
2,3,7,8 – tetra CDD	1.0
2,3,7,8 – penta CDD	0.5
2,3,7,8 – hexa CDD	0.1
2,3,7,8 – hepta CDD	0.01
octa CDD	0.001
2,3,7,8 – tetra CDF	0.1
1,2,3,7,8 – penta CDF	0.05
2,3,4,7,8 – penta CDF	0.5
2,3,7,8 – hexa CDFs	0.1
2,3,7,8 – hepta CDFs	0.01
Octa CDF	0.001

.

2. Performance Goals

a. Constituents that do not have reasonable potential to cause or contribute to an exceedance of water quality objectives, or for which reasonable potential to cause or contribute to an exceedance of water quality objectives cannot be determined, are referred to as performance goal constituents and are assigned the performance goals listed in the following table. Performance goal

constituents shall be monitored at M-004, but the results will be used for informational purposes only, not compliance determination.

Table 11. Performance Goals

Parameter	Unit	Performance Goals[1]			
		6-Month Median	Maximum Daily	Instantaneous Maximum	30-Day Average
OBJECTIVES FOR PROTECTION OF MARINE AQUATIC LIFE					
Arsenic, Total Recoverable	µg/L	4.4E+02	2.6E+03	6.8E+03	--
Cadmium, Total Recoverable	µg/L	8.8E+01	3.5E+02	8.8E+02	--
Chromium VI, Total Recoverable[4]	µg/L	1.8E+02	7.0E+02	1.8E+03	--
Copper, Total Recoverable	µg/L	9.0E+01	8.8E+02	2.5E+03	--
Lead, Total Recoverable	µg/L	1.8E+02	7.0E+02	1.8E+03	--
Mercury, Total Recoverable	µg/L	3.5E+00	1.4E+01	3.5E+01	--
Nickel, Total Recoverable	µg/L	4.4E+02	1.8E+03	4.4E+03	--
Selenium, Total Recoverable	µg/L	1.3E+03	5.3E+03	1.3E+04	--
Silver, Total Recoverable	µg/L	4.8E+01	2.3E+02	6.0E+02	--
Zinc, Total Recoverable	µg/L	1.1E+03	6.3E+03	1.7E+04	--
Cyanide, Total (as CN)[2]	µg/L	8.8E+01	3.5E+02	8.8E+02	--
Chlorine, Total Residual[3]	µg/L	1.8E+02	7.0E+02	5.3E+03	--
Ammonia (expressed as nitrogen)	µg/L	5.3E+04	2.1E+05	5.3E+05	--
Acute Toxicity	TUa	--	2.6E+01	--	--
Chronic Toxicity[5]	TUc	--	8.8E+01	--	--
Phenolic Compounds (non-chlorinated)[6]	µg/L	2.6E+03	1.1E+04	2.6E+04	--
Chlorinated Phenolics[7]	µg/L	8.8E+01	3.5E+02	8.8E+02	--
Endosulfan[8]	µg/L	7.9E-01	1.6E+00	2.4E+00	--
Endrin	µg/L	1.8E-01	3.5E-01	5.3E-01	--
HCH[9]	µg/L	3.5E-01	7.0E-01	1.1E+00	--
Radioactivity	pCi/L	Not to exceed limits specified in Title 17, Division 1, Chapter 5, Subchapter 4, Group 3, Article 3, Section 30253 of the California Code of Regulations, Reference to Section 30253 is prospective, including future changes to any incorporated provisions of federal law, as the changes take effect.			

Parameter	Unit	Performance Goals[1]			
		6-Month Median	Maximum Daily	Instantaneous Maximum	30-Day Average
OBJECTIVES FOR PROTECTION OF HUMAN HEALTH – NONCARCINOGENS					
Acrolein	µg/L	--	--	--	1.9E+04
Antimony	µg/L	--	--	--	1.1E+05
Bis(2-chloroethoxy) Methane	µg/L	--	--	--	3.9E+02
Bis(2-chloroisopropyl) Ether	µg/L	--	--	--	1.1E+05
Chlorobenzene	µg/L	--	--	--	5.0E+04
Chromium (III), Total Recoverable	µg/L	--	--	--	1.7E+07
Di-n-butyl Phthalate	µg/L	--	--	--	3.1E+05
Dichlorobenzenes[10]	µg/L	--	--	--	4.5E+05
Diethyl Phthalate	µg/L	--	--	--	2.9E+06
Dimethyl Phthalate	µg/L	--	--	--	7.2E+07
4,6-dinitro-2-methylphenol	µg/L	--	--	--	1.9E+04
2,4-dinitrophenol	µg/L	--	--	--	3.5E+02
Ethylbenzene	µg/L	--	--	--	3.6E+05
Fluoranthene	µg/L	--	--	--	1.3E+03
Hexachlorocyclopentadiene	µg/L	--	--	--	5.1E+03
Nitrobenzene	µg/L	--	--	--	4.3E+02
Thallium, Total Recoverable	µg/L	--	--	--	1.8E+02
Toluene	µg/L	--	--	--	7.5E+06
1,1,1-trichloroethane	µg/L	--	--	--	4.8E+07
OBJECTIVES FOR PROTECTION OF HUMAN HEALTH – CARCINOGENS					
Acrylonitrile	µg/L	--	--	--	8.8E+00
Aldrin	µg/L	--	--	--	1.9E-03
Benzene	µg/L	--	--	--	5.2E+02
Benzidine	µg/L	--	--	--	6.1E-03
Beryllium	µg/L	--	--	--	2.9E+00
Bis(2-chloroethyl) Ether	µg/L	--	--	--	4.0E+00
Bis(2-ethlyhexyl) Phthalate	µg/L	--	--	--	3.1E+02
Carbon Tetrachloride	µg/L	--	--	--	7.9E+01
Chlorodane[11]	µg/L	--	--	--	2.0E-03
Chlorodibromomethane	µg/L	--	--	--	7.6E+02
Chloroform	µg/L	--	--	--	1.1E+04
DDT[12]	µg/L	--	--	--	1.5E-02
1,4-dichlorobenzene	µg/L	--	--	--	1.6E+03
3,3'-dichlorobenzidine	µg/L	--	--	--	7.1E-01
1,2-dichloroethane	µg/L	--	--	--	2.5E+03
1,1-dichloroethylene	µg/L	--	--	--	7.9E+01
Dichlorobromomethane	µg/L	--	--	--	5.5E+02

Parameter	Unit	Performance Goals[1]			
		6-Month Median	Maximum Daily	Instantaneous Maximum	30-Day Average
Dichloromethane	µg/L	--	--	--	4.0E+04
1,3-dichloropropene	µg/L	--	--	--	7.8E+02
Dieldrin	µg/L	--	--	--	3.5E-03
2,4-dinitrotoluene	µg/L	--	--	--	2.3E+02
1,2-diphenylhydrazine	µg/L	--	--	--	1.4E+01
Halomethanes[13]	µg/L	--	--	--	1.1E+04
Heptachlor	µg/L	--	--	--	4.4E-03
Heptachlor Epoxide	µg/L	--	--	--	1.8E-03
Hexachlorobenzene	µg/L	--	--	--	1.8E-02
Hexachlorobutadiene	µg/L	--	--	--	1.2E+03
Hexachloroethane	µg/L	--	--	--	2.2E+02
Isophorone	µg/L	--	--	--	6.4E+04
N-nitrosodimethylamine	µg/L	--	--	--	6.4E+02
N-nitrosodi-N-propylamine	µg/L	--	--	--	3.3E+01
N-nitrosodiphenylamine	µg/L	--	--	--	2.2E+02
PAHs[14]	µg/L	--	--	--	7.7E-01
PCBs[15]	µg/L	--	--	--	1.7E-03
1,1,2,2-tetrachloroethane	µg/L	--	--	--	2.0E+02
Tetrachloroethylene	µg/L	--	--	--	1.8E+02
Toxaphene	µg/L	--	--	--	1.8E-02
Trichloroethylene	µg/L	--	--	--	2.4E+03
1,1,2-trichloroethane	µg/L	--	--	--	8.3E+02
2,4,6-trichlorophenol	µg/L	--	--	--	2.6E+01
Vinyl Chloride	µg/L	--	--	--	3.2E+03

Parameter	Unit	Performance Goals[1]			
		6-Month Median	Maximum Daily	Instantaneous Maximum	30-Day Average

[1] Scientific "E" notation is used to express certain values. In scientific "E" notation, the number following the "E" indicates that position of the decimal point in the value. Negative numbers after the "E" indicate that the value is less than 1, and positive numbers after the "E" indicate that the value is greater than 1. In this notation a value of 6.1E-02 represents 6.1×10^{-2} or 0.061, 6.1E+02 represents 6.1×10^{2} or 610, and 6.1E+00 represents 6.1×10^{0} or 6.1.

[2] If the Discharger can demonstrate to the satisfaction of the San Diego Water Board (subject to USEPA approval) that an analytical method is available to reliably distinguish between strongly and weakly complexed cyanide, performance goals may be evaluated with the combined measurement of free cyanide, simple alkali metals cyanides, and weakly complexed organometallic cyanide complexes. In order for the analytical method to be acceptable, the recovery of free cyanide from metal complexes must be comparable to that achieved by the approved method in 40 CFR Part 136, as revised May 14, 1999.

[3] The water quality objectives for total chlorine residual applicable to intermittent discharges not exceeding two hours, shall be determined through the use of the following equation:

log y =0.43 (log x) + 1.8,
where y =the water quality objective (in ug/l) to apply when chlorine is being discharged;
x =the duration of uninterrupted chlorine discharge in minutes.

Actual effluent limitations for total chlorine, when discharging intermittently, shall then be determined according to Implementation Procedures for Table B from the Ocean Plan, using a minimum probable initial dilution factor of 87 and the applicable flow rate.

[4] Dischargers may, at their option, apply this performance goal as a total chromium performance goal.

[5] Chronic toxicity expressed as Chronic Toxicity Units (TUc) = 100/NOEL, where NOEL (No Observed Effect Level) is expressed as the maximum percent effluent or receiving water that causes no observable effect on a test organism.

[6] Non-chlorinated phenolic compounds represent the sum of 2,4-dimethylphenol, 4,6-Dinitro-2-methylphenol, 2,4-dinitrophenol, 2-methylphenol, 4-methylphenol, 2-Nitrophenol, 4-nitrophenol, and phenol.

[7] Chlorinated phenolic compounds represent the sum of 4-chloro-3-methylphenol, 2-chlorophenol, pentachlorophenol, 2,4,5-trichlorophenol, and 2,4,6-trichlorophenol.

[8] Endosulfan represents the sum of alpha-endosulfan, beta-endosulfan, and endosulfan sulfate.

[9] HCH (hexachlorocyclohexane) represents the sum of the alpha, beta, gamma (Lindane), and delta isomers of hexachlorocyclohexane.

[10] Dichlorobenzenes represent the sum of 1,2- and 1,3-dichlorobenzene.

[11] Chlordane shall mean the sum of chlordane-alpha, chlordane-gamma, chlordane-alpha, chlordane-gamma, nonachlor-alpha, nonachlor-gamma, and oxychlordane.

[12] DDT represents the sum of 4,4'DDT; 2,4'DDT; 4,4'DDE; 2,4'DDE; 4,4'DDD; and 2,4'DDD.

[13] Halomethanes represent the sum of bromoform, bromomethane (methyl bromide), and chloromethane (methyl chloride).

[14] PAHs (polynuclear aromatic hydrocarbons) represent the sum of acenapthalene; anthracene; 1,2-benzanthracene; 3,4-benzofluoranthene; benzo[k]fluoranthene; 1,12-benzoperylene; benzo[a]pyrene; chrysene; dibenzo[a,h]anthracene; fluorene; indeno[1,2,3-cd]pyrene; phenanthrene; and pyrene.

[15] PCBs (polychlorinated biphenyls) represent the sum of chlorinated biphenyls whose analytical characteristics resemble those of Aroclor-1016, Aroclor-1221, Aroclor-1232, Aroclor-1242, Aroclor-1248, Arolclor-1254, and Arcolor-1260.

3. Interim Effluent Limitations – Not Applicable

B. Land Discharge Specifications – Not Applicable

C. Reclamation Specifications

The Discharger shall continue to comply with reclamation requirements established in Board Order No. 93-07 and any applicable future revised or renewal waste discharge requirements.

V. RECEIVING WATER LIMITATIONS

A. Surface Water Limitations

Receiving water limitations are based on water quality objectives contained in the Basin Plan and Ocean Plan and are a required part of this Order. The discharge shall not cause the following in the Pacific Ocean.

1. Bacterial Characteristics

a. Within a zone bounded by the shoreline and a distance of 3 nautical miles from the shoreline, including all kelp beds, the following bacterial objectives shall be maintained throughout the water column. The zone of initial dilution for ocean outfall is excluded.

30-day Geometric Mean – The following standards are based on the geometric mean of the five most recent samples from each site:

i. Total coliform density shall not exceed 1,000 per 100 ml;

ii. Fecal coliform density shall not exceed 200 per 100 ml; and

iii. Enterococcus density shall not exceed 35 per 100 ml.

Single Sample Maximum:

i. Total coliform density shall not exceed 10,000 per 100 ml;

ii. Fecal coliform density shall not exceed 400 per 100 ml;

iii. Enterococcus density shall not exceed 104 per 100 ml; and

iv. Total coliform density shall not exceed 1,000 per 100 ml when the fecal coliform/total coliform ratio exceeds 0.1.

b. The Initial Dilution Zone for any wastewater outfall shall be excluded from designation as kelp beds for purposes of bacterial standards. Adventitious assemblages of kelp plants on waste discharge structures (e.g., outfall pipes and diffusers) do not constitute kelp beds for purposes of bacterial standards.

c. At all areas where shellfish may be harvested for human consumption, as determined by the San Diego Water Board, the median total coliform density shall not exceed 70 per 100 ml throughout the water column, and not more than 10 percent of the samples shall exceed 230 per 100 ml.

2. Physical Characteristics

a. Floating particulates and grease and oils shall not be visible.

b. The discharge of waste shall not cause aesthetically undesirable discoloration of the ocean surface.

c. Natural light shall not be significantly reduced at any point outside the initial dilution zone as a result of the discharge of waste.

d. The rate of deposition of inert solids and the characteristics of inert solids in the ocean sediments shall not be changed such that benthic communities are degraded.

3. Chemical Characteristics

a. The dissolved oxygen concentration shall not at any time be depressed more than 10 percent from that which occurs naturally, as the result of the discharge of oxygen demanding waste materials.

b. The pH shall not be changed at any time more than 0.2 units from that which occurs naturally.

c. The dissolved sulfide concentration of waters in and near sediments shall not be significantly increased above that present under natural conditions.

d. The concentration of substances set forth in Chapter II, Table B of the Ocean Plan, shall not be increased in marine sediments to levels that would degrade indigenous biota.

e. The concentration of organic materials in marine sediments shall not be increased to levels that would degrade marine life.

f. Nutrient materials shall not cause objectionable aquatic growths or degrade indigenous biota.

g. Numerical water quality objectives established in Section II, Table B of the California Ocean Plan shall not be exceeded outside of the zone of initial dilution as a result of the discharges from the Facility.

4. Biological Characteristics

a. Marine communities, including vertebrate, invertebrate, and plant species, shall not be degraded.

b. The natural taste, odor, color of fish, shellfish, or other marine resources used for human consumption shall not be altered.

c. The concentration of organic materials in fish, shellfish, or other marine resources used for human consumption shall not bioaccumulate to levels that are harmful to human health.

5. Radioactivity

a. Discharge of radioactive waste shall not degrade marine life.

B. Groundwater Limitations – Not Applicable

VI. PROVISIONS

A. Standard Provisions

1. **Federal Standard Provisions**. The Discharger shall comply with all Standard Provisions included in Attachment D of this Order.

2. **San Diego Water Board Standard Provisions**. The Discharger shall comply with the following provisions:

a. Compliance with Ocean Plan Discharge Prohibitions, summarized in Attachment G of this Order, is required as a condition of this Order.

b. Compliance with the Discharge Prohibitions contained in Chapter 4 of the Basin Plan, summarized in Attachment G of this Order, is required as a condition of this Order.

c. The Discharger shall comply with all requirements and conditions of this Order. Any permit non-compliance constitutes a violation of the CWA and/or the CWC and is grounds for enforcement action, permit termination, revocation and reissuance, or modification, or for denial of an application for permit renewal, modification, or reissuance.

d. The Discharger shall comply with all applicable federal, State, and local laws and regulations that pertain to sewage sludge handling, treatment, use and disposal, including CWA section 405 and USEPA regulations at 40 CFR Part 257.

e. The Discharger's wastewater treatment facilities shall be supervised and operated by persons possessing certificates of appropriate grade pursuant to Title 23, Division 3, Chapter 26 of the California Code of Regulations (CCR).

f. All proposed new treatment facilities and expansions of existing treatment facilities shall be completely constructed and operable prior to initiation of the discharge from the new or expanded facilities. The Discharger shall submit a certification report for each new treatment facility, expansion of an existing treatment facility, and re-ratings, the certification report shall be prepared by the design engineer. For re-ratings, the certification report shall be prepared by the engineer who evaluated the treatment facility capacity. The certification report shall:

i. Identify the design capacity of the treatment facility, including the daily and 30-day design capacity,

ii. Certify the adequacy of each component of the treatment facility, and

iii. Contain a requirement-by-requirement analysis, based on acceptable engineering practices, of the process and physical design of the facility to ensure compliance with this Order.

iv. Contain the signature and engineering license number of the engineer preparing the certification report affixed to the report. If reasonable, the certification report shall be submitted prior to beginning construction. The Discharger shall not initiate a discharge from an existing treatment facility at a daily flow rate in excess of its previously approved design capacity until:

i. The certification report is received by the Executive Officer,

ii. The Executive Officer has received written notification of completion of construction (new treatment facilities and expansions only),

iii. An inspection of the facility has been made by staff of the San Diego Water Board or their designated representatives (new treatment facilities and expansions only), and

iv. The Executive Officer has provided the Discharger with written authorization to discharge at a daily flow rate in excess of its previously approved design capacity.

g. All waste treatment, containment, and disposal facilities shall be protected against 100-year peak stream flows as defined by the San Diego County flood control agency.

h. All waste treatment, containment, and disposal facilities shall be protected against erosion, overland runoff, and other impacts resulting from a 100-year, 24-hour storm event.

i. This Order expires on March 2, 2016, after which, the terms and conditions of this permit are automatically continued pending issuance of a new permit, provided that all requirements of USEPA's NPDES regulations at 40 CFR 122.6 and the State's regulations at CCR Title 23, section 2235.4 regarding the continuation of expired permits and waste discharge requirements are met.

j. The Discharger's wastewater treatment facilities shall be operated and maintained in accordance with the operations and maintenance manual prepared by the Discharger pursuant to the Clean Water Grant Program.

k. A copy of this Order shall be posted at a prominent location at or near the treatment and disposal facilities and shall be available to operating personnel at all times.

l. The Discharger shall comply with any interim limitations established by addendum, enforcement action, or revised waste discharge requirements that have been or may be adopted by the San Diego Water Board.

m. The Discharger shall comply with effluent standards and prohibitions for toxic pollutants established pursuant to section 307(a) of the CWA within the time frame set forth by the regulations that establish those standards and prohibitions, even if this Order has not been modified to incorporate the requirements. If an applicable effluent standard or prohibition, including any schedule of compliance, is promulgated pursuant to section 307(d) of the CWA for a toxic pollutant, and that standard or prohibition is more stringent than a limitation contained in this Order, the Executive Officer may institute proceedings to modify or revoke and reissue the Order to conform to the effluent standard or prohibition.

B. Monitoring and Reporting Program (MRP) Requirements

The Discharger shall comply with the MRP, and future revisions thereto, in Attachment E of this Order.

C. Special Provisions

1. Reopener Provisions

a. This Order may be reopened for modification to include an effluent limitation if monitoring establishes that the discharge causes, has the reasonable potential to cause, or contributes to an excursion above an Ocean Plan Table B water quality objective.

b. This Order may be reopened for modification of the receiving waters monitoring requirements, as the Executive Officer determines. The modification(s) can include, but is(are) not limited to, recommendations from Southern California Coastal Water Research Project (SCCWRP) or creation of a Regional Monitoring Program.

c. This Order may be modified, revoked and reissued, or terminated for cause including, but not limited to, the following;

i. Violation of any terms or conditions of this Order.

ii. Obtaining this Order by misrepresentation or failure to disclose fully all relevant fact.

iii. A change in any condition that requires either a temporary or permanent reduction or elimination of the authorized discharge.

The filing of a request by the Discharger for modifications, revocation and reissuance, or termination of this Order does not stay any condition of this Order. Notification by the Discharger of planned operational or facility changes, or

anticipated noncompliance with this Order does not stay any condition of this Order.

d. If any applicable toxic effluent standard or prohibition (including any schedule of compliance specified in such effluent standard or prohibition) is promulgated under section 307 (a) of the CWA for a toxic pollutant and that standard or prohibition is more stringent than any limitation on the pollutant in this Order, the San Diego Water Board may institute proceedings under these regulations to modify or revoke and reissue the Order to conform to the toxic effluent standard or prohibition.

e. This Order may be re-opened and modified, to incorporate in accordance with the provisions set forth in 40 CFR Parts 122 and 124, to include requirements for the implementation of the watershed management approach.

f. This Order may be reopened and modified, in accordance with the provisions set forth in 40 CFR Parts 122 and 124, to include new Minimum Levels (MLs).

g. This Order may be re-opened and modified to revise effluent limitations as a result of future Basin Plan Amendments, or the adoption of a total maximum daily load (TMDL) for the receiving water.

h. This Order may be re-opened upon submission by the Discharger of adequate information, as determined by this San Diego Water Board, to provide for dilution credits or a mixing zone, as may be appropriate.

i. This Order may be re-opened and modified to revise the toxicity language once that language becomes standardized.

j. This Order may also be re-opened and modified, revoked and reissued, or terminated in accordance with the provisions of 40 CFR 122.44, 122.62 to 122.64, 125.62, and 125.62. Causes for taking such actions include, but are not limited to, failure to comply with any condition of this Order and permit, and endangerment to human health or the environment resulting from the permitted activity.

2. Special Studies, Technical Reports and Additional Monitoring Requirements

a. Spill Prevention and Response Plans

i. For purposes of this section, a spill is a discharge of treated or untreated wastewater that occurs at or downstream of the Facility headworks in violation of Discharge Prohibition III.A of this Order, or a discharge of other materials related to the Facility. This section does not include sanitary sewer overflows reportable under separate waste discharge requirements.

ii. The Discharger shall maintain a Spill Prevention Plan (SPP) for the facilities owned and/or operated by the Discharger in an up-to-date condition and shall

amend the SPP whenever there is a change (e.g., in the design, construction, operation, or maintenance of the sewerage system or sewerage facilities) which materially affects the potential for spills. The Discharger shall review and amend the SPP as appropriate after each spill from the Facility. The SPP and any amendments thereto shall be subject to the approval of the Executive Officer and shall be modified as directed by the Executive Officer. The Discharger shall submit the SPP and any amendments thereto to the Executive Officer upon request of the Executive Officer. The Discharger shall ensure that the up-to-date SPP is readily available to the sewerage system personnel at all times and that the sewerage system personnel are familiar with it.

iii. The Discharger shall maintain a Spill Response Plan (SRP) for the Facility in an up-to-date condition and shall amend the SRP, as necessary. The Discharger shall review and amend the SRP as appropriate after each spill from the Facility. The SRP and any amendments thereto shall be subject to the approval of the Executive Officer and shall be modified as directed by the Executive Officer. The Discharger shall submit the SRP and any amendments thereto to the Executive Officer upon request of the Executive Officer. The Discharger shall ensure that the up-to-date SRP is readily available to the sewerage system personnel at all times and that the sewerage system personnel are familiar with it.

b. Spill Reporting Requirements

The Discharger shall report spills as defined in section VI.C.2.a.i above in accordance with the following procedures:

i. If a spill results in a discharge of treated or untreated wastewater that is equal to or exceeds 1,000 gallons, or results in a discharge to a drainage channel and/or surface water; or results in a discharge to a storm drain that was not fully captured and returned to the sanitary sewer system, the Discharger shall:

(a) Report the spill to the San Diego Water Board by telephone, by voice mail, or by FAX within 24 hours from the time the Discharger becomes aware of the spill. The Discharger shall inform the San Diego Water Board of the date of the spill, spill location and its final destination, time the spill began and ended, estimated total spill volume, and type of spill material.

(b) Submit a written report, as well as any additional pertinent information, to the San Diego Water Board no later than five days from the time the Discharger becomes aware of the spill..

ii. If a spill results in a discharge of treated or untreated wastewater under 1,000 gallons and the discharge does not reach a drainage channel, surface waters, or storm drain, or reached a storm drain but was fully captured, the

Discharger is not required to notify the San Diego Water Board within 24 hours or provide a five-day written report.

iii. For spills of material other than treated or untreated wastewater that cause, may cause, or are caused by significant operational failure, or endangers or may endanger human health or the environment, the Discharger shall notify the San Diego Water Board by telephone, by voice mail, or by FAX within 24 hours from the time the Discharger becomes aware of the spill. The Discharger shall inform the San Diego Water Board of the date of the spill, spill location and its final destination, time the spill began and ended, estimated total spill volume, and type of spill material.

iv. For all spills, the Discharger shall include a detailed summary of spills in the monthly self-monitoring report for the month in which the spill occurred.

v. The spill reporting requirements contained in this Order do not relieve the Discharger of responsibilities to report to other agencies, such as the California Emergency Management Agency (EMA) and the County of San Diego Department of Environmental Health Services.

c. Toxicity Reduction Requirements

If the performance goal for chronic toxicity is exceeded in any one test, then within 15 days of the exceedance the Discharger shall begin conducting six additional tests, bi-weekly, over a 12 week period.

If the toxicity effluent limitation is exceeded in any of these six additional tests, then the Discharger shall notify the Executive Officer. If the Executive Officer determines that the discharge consistently exceeds a toxicity effluent limitation, then the Discharger shall initiate a Toxicity Reduction Evaluation (TRE)/Toxicity Identification Evaluation (TIE) in accordance with the TRE workplan, *Toxicity Reduction Evaluation Guidance for Municipal Wastewater Treatment Plants* (USEPA 833-B-99-002, 1999), and USEPA TIE guidance documents (Phase I, EPA/600/6-91/005F, 1992; Phase II, EPA/600/R-92/080, 1993; and Phase III, EPA/600/R-92/081, 1993). Once the source of toxicity is identified, the Discharger shall take all reasonable steps to reduce the toxicity to meet the chronic toxicity performance goal identified in section IV.A.2.a of this Order.

Within 30 days of completion of the TRE/TIE, the Discharger shall submit the results of the TRE/TIE, including a summary of the findings, data generated, a list of corrective actions necessary to achieve consistent compliance with all the toxicity limitations/performance goals of this Order and prevent recurrence of exceedances of those limitations/performance goals, and a time schedule for implementation of such corrective actions. The corrective actions and time schedule shall be modified at the direction of the Executive Officer.

If no toxicity is detected in any of these additional six tests, then the Discharger may return to the testing frequency specified in the MRP.

d. Toxicity Reduction Evaluation (TRE)

The Discharger shall develop a TRE workplan in accordance with TRE procedures established by USEPA in the following guidance manuals.

i. *Generalized Methodology for Conducting Industrial Toxicity Reduction Evaluations* (EPA/600/2-88/070).

ii. *Toxicity Identification Evaluation, Phase I* (EPA/600/6-91/005F).

iii. *Methods for Aquatic Toxicity Identification Evaluations, Phase II* (EPA/600/R-92/080).

iv. *Methods for Aquatic Toxicity Identification Evaluations, Phase III* (EPA/600/R-92/081).

The Discharger shall submit the TRE workplan to the San Diego Water Board within 180 days of the adoption of this Order. The TRE workplan shall be subject to the approval of the San Diego Water Board and shall be modified as directed by the San Diego Water Board.

3. Best Management Practices and Pollution Prevention – Not Applicable

4. Construction, Operation and Maintenance Specifications – Not Applicable

5. Special Provisions for Wastewater Facilities (POTWs Only)

a. Oceanside Ocean Outfall Capacity

i. Discharges to the OOO are limited to 22.6 MGD based on the available capacity of the OOO at the time of drafting this Order. The Discharger has reported that by cleaning the OOO, the capacity of the OOO will increase 0.8 MGD above the current capacity to 23.4 MGD. If the outfall cleaning is not implemented, the Discharger reports that replacing a constricting 15-inch diameter meter section of the land portion of the OOO at the LSTWP site will increase the OOO capacity by 0.5 MGD above the current capacity. Implementing both the outfall cleaning and meter section replacement will have a cumulative effect on outfall capacity, and would increase the OOO capacity by 1.8 MGD to 24.4 MGD. This Order prohibits the discharge of wastes through the OOO from SLRWRF, SLWTP, MBDF, Genentech, Fallbrook Public Utilitiy District, and US Marine Corp Camp Pendleton in excess of 22.6 MGD based on the reported capacity of the OOO.

(a) The Discharger may obtain written authorization from the San Diego Water Board under this Order to discharge up to 23.1 MGD if the following conditions are met:

(1) The Discharger submits documentation demonstrating that the 15-inch diameter meter section has been replaced, and the OOO has sufficient capacity for 23.1 MGD of waste; and

(2) The Discharger submits a certified statement signed by a California Licensed Engineer that states that the capacity of the OOO is at least 23.1 MGD.

(b) The Discharger may obtain written authorization from the San Diego Water Board under this Order to discharge up to 23.4 MGD if the following conditions are met:

(1) The Discharger submits documentation demonstrating that the OOO has been cleaned and the OOO has sufficient capacity for 23.4 MGD of waste; and

(2) The Discharger submits a certified statement signed by a California Licensed Engineer that states that the capacity of the OOO is at least 23.4 MGD.

(c) The Discharger may obtain written authorization from the San Diego Water Board under this Order to discharge up to 24.4 MGD if the following conditions are met:

(1) The Discharger submits documentation demonstrating that the OOO has been cleaned, the 15-inch diameter meter section has been replaced, and the OOO has sufficient capacity for 24.4 MGD of waste; and

(2) The Discharger submits a certified statement signed by a California Licensed Engineer that states that the capacity of the OOO is at least 24.4 MGD.

ii. Discharges from SLRWRF to the OOO through the land outfall are limited to 13.5 MGD based on the capacity of the land outfall. The Discharger has stated that the land outfall capacity may be increased from 13.5 MGD to 15.4 MGD over the term of this permit. This permit prohibits the discharge of effluent to the OOO through the land outfall in excess of 13.5 MGD unless:

(a) The Discharger submits all documentation, including engineering plans and relevant studies (and all additionally requested documents), to the San Diego Water Board to demonstrate that the capacity of the land outfall to the OOO has been increased to 15.4 MGD.

(b) The Discharger submits a certified statement signed by a California Licensed Engineer that states that the capacity of the land outfall to the OOO is at least 15.4 MGD.

iii. Annually, by March 1st, the Discharger shall provide:

(a) A comparison of the total available capacity of the OOO and highest daily and monthly average flows from all facilities (SLRWRF, SLWTP, MBDF, Camp Pendleton, Fallbrook Public Utilities District, and Genentech) to the OOO for the previous year;

(b) A summary of the dischargers to the OOO and their permitted flow rate, average daily flow rate, and daily maximum flow rate for the previous year from all facilities;

(c) Wet weather standard operating procedures for each discharger (including the City of Oceanside) to the OOO, including any available influent or effluent storage capacity;

(d) Future plans or policies that may impact the total amount of effluent discharged to the OOO for any of the dischargers to the OOO;

(e) A feasibility analysis to maintain compliance with the flow prohibition to the OOO (no more than 22.6 MGD from all facilities or as otherwise allowed if the conditions in section VI.C.5.a.i of this Order are met).

(f) The Discharger's intended schedule for studies, design, and other steps needed to provide additional capacity for the Oceanside Ocean Outfall and/or to control the flow rate before the flow rate is equal to the current outfall capacity;

iv. No later than 180 days prior to this Order's expiration date, the Discharger shall submit a written report to the Executive Officer regarding capacity of the OOO that addresses the following items:

(a) Most current report on the OOO capacity conducted within 1 year of the expiration date of this Order;

(b) The Discharger's best estimate of when the average daily flow will equal or exceed the OOO capacity;

(c) The Discharger's intended schedule for studies, design, and other steps needed to provide additional capacity for the OOO and/or to control the flow rate before the flow rate is equal to the current outfall capacity;

(d) Report on the physical condition of the OOO; and

(e) The report must be signed and agreed upon by each of the parties discharging through the OOO.

b. Treatment Plant Capacity

The Discharger shall submit a written report to the Executive Officer within 90 days after the monthly average influent flow rate equals or exceeds 75 percent of the secondary treatment design capacity of the wastewater treatment and/or disposal facilities. The Discharger's senior administrative officer shall sign a letter in accordance with Standard Provision V.B. (Attachment D of this Order) which transmits that report and certifies that that policy-making body is adequately informed of the influent flow rate relative to the Facility's design capacity. The report shall include the following:

i. Average influent daily flow for the calendar month, the date on which the maximum daily flow occurred, and the rate of that maximum flow.

ii. The Discharger's best estimate of when the average daily influent flow for a calendar month will equal or exceed the design capacity of the facilities.

iii. The Discharger's intended schedule for studies, design, and other steps needed to provide additional treatment for the wastewater from the collection system before the waste flow exceeds the capacity of present units.

c. Pretreatment Program[1]

i. The Discharger shall be responsible for the performance of all pretreatment requirements contained in 40 CFR Part 403, including any subsequent revisions in 40 CFR Part 404. Where 40 CFR Part 403 or subsequent revisions place mandatory actions upon the Discharger but do not specify a timetable for completion, the Discharger shall complete the mandatory actions within 6 months of the issuance date of this Order, or the effective date of the revisions to 40 CFR Part 403, whichever comes later. For violations of pretreatment requirements, the Discharger shall be subject to enforcement actions, penalties, fines, and other remedies imposed by the USEPA and/or the San Diego Water Board, as provided in the CWA and/or the CWC.

ii. The Discharger shall implement and enforce its approved Pretreatment Program, and all subsequent revisions, including the revisions to the Discharger's local limits adopted by the Oceanside City Council on August 15, 2012, which are hereby made enforceable conditions of this Order.~~The Discharger shall implement and enforce its approved pretreatment program, and all subsequent revisions, which are hereby made enforceable conditions of this Order.~~ The Discharger shall enforce the requirements promulgated pursuant to Sections 307(b), 307 (c), 307 (d), and 402 (b) of the CWA with timely, appropriate, and effective enforcement actions. The Discharger shall cause industrial users subject to federal categorical standards to achieve compliance no later than the date specified in those requirements, or in the case of a new industrial user, upon commencement of the discharge.

[1] Section VI.C.5.c.ii modified by Order No. R9-2012-0060, Directive 2

iii. The Discharger shall perform the pretreatment functions required by 40 CFR 403, including, but not limited to:

(a) Implement the necessary legal authorities as required by 40 CFR 403.8 (f) (1);

(b) Enforce the pretreatment requirements under 40 CFR 403.5 and 403.6;

(c) Implement the programmatic functions as required by 40 CFR 403.8 (f) (2); and

(d) Provide the requisite funding and personnel to implement the pretreatment program, as required by 40 CFR 403.8 (f) (3).

iv. By March 1 of each year, the Discharger shall submit an annual report to the San Diego Water Board; USEPA Region 9; the State Water Board, Division of Public Water Quality, Regulations Unit; and the San Diego County Department of Health Services, Hazardous Materials Division, describing its pretreatment activities over the previous calendar year. In the event the Discharger is not in compliance with any condition or requirement of this Order, or any pretreatment compliance inspection/audit requirements, the Discharger shall include the reasons for noncompliance and state how and when it will comply with such conditions and requirements. The annual report shall contain, but not be limited to, the following information:

(a) A summary of analytical results from representative flow-proportioned 24-hour composite sampling of the Discharger's influent and effluent for those pollutants known or suspected to be discharged by industrial users that the USEPA has identified under Section 307 (d) of the CWA, which are known or suspected to be discharged by industrial users. This will consist of an annual full priority pollutant scan. Wastewater sampling and analysis shall be performed in accordance with the minimum frequency of analysis required by the Monitoring and Reporting program of this Order (Attachment E of this Order). The Discharger shall also provide influent and effluent monitoring data for non-priority pollutants, which the Discharger believes may be causing or contributing to interference or pass through. The Discharger is not required to sample and analyze for asbestos. Sludge sampling and analysis is addressed in Attachment E of this Order. Wastewater sampling and analysis shall be performed in accordance with 40 CFR Part 136.

(b) A discussion of upset, interference, or pass through, if any, at the Facilities, which the Discharger knows or suspects were caused by industrial users. The discussion shall include the reasons why the incidents occurred, any corrective actions taken, and, if known, the name and address of the responsible industrial user(s). The discussion shall also include a review of the applicable local pollutant limitations to determine whether any additional limitations or changes to existing

limitations, are necessary to prevent pass-through, interference, or non-compliance with sludge disposal requirements.

(c) The Discharger shall characterize the compliance status of each significant industrial user (SIU) by providing a list or table for the following:

(1) Name of SIU and category, if subject to categorical standards;

(2) Type of wastewater treatment or control processes in place;

(3) Number of samples taken by SIU during the year;

(4) Number of samples and inspections by Discharger during the year;

(5) For an SIU subject to discharge requirements for total toxic organics (TTO), whether all required certifications were provided;

(6) A list of pretreatment standards (categorical or local) violated during the year, or any other violations;

(7) Industries in significant non-compliance as defined at 40 CFR 403.12 (f) (2)(vii), at any time during the year;

(8) A summary of enforcement actions or any other actions taken against SIUs during the year. Describe the type of action, final compliance date, and the amount of fines and/or penalties collected, if any. Describe any proposed actions for bringing SIUs into compliance; and

(9) The name(s) of any SIU(s) required to submit a baseline monitoring report and any SIUs currently discharging under a baseline monitoring report.

(d) A brief description of any programs the Discharger implements to reduce pollutants from industrial users not classified as SIUs.

(e) A brief description of any significant changes in operating the pretreatment program which differ from the previous year, including, but not limited to, changes in the program's administrative structure, local limits, monitoring program, legal authority, enforcement policy, funding, and staffing levels;

(f) A summary of the annual pretreatment program budget, including the cost of pretreatment program functions and equipment purchases;

(g) A summary of activities to involve and inform the public of the pretreatment program, including a copy of the newspaper notice, if any, required by 40 CFR 403.8 (f) (2) (vii);

(h) A description of any changes in sludge disposal methods; and

(i) A discussion of any concerns not described elsewhere in the annual report.

v. The Discharger shall submit a semiannual SIU compliance status report to the San Diego Water Board, the State Water Board, and the USEPA. The reports shall cover the periods of January 1 through June 30, and July 1 through December 31 and shall be submitted no later than September 1 and March 1, respectively. The report shall identify:

(a) The names and addresses of all SIUs which violated any discharge or reporting requirements during the semi-annual reporting period;

(b) A description of the violations, including whether the discharge violations were for categorical standards or local limits;

(c) A description of the enforcement actions or other actions taken to remedy the non-compliance; and

(d) The status of enforcement actions or other actions taken in response to SIU noncompliance identified in previous reports.

vi. The Discharger shall continue with its implementation of a Non-Industrial Source Control Program, consisting of a public education program designed to minimize the entrance of non-industrial toxic pollutants and pesticides into the sanitary sewer system. The Program shall be reviewed periodically and addressed in the annual report.

d. Sludge (Biosolids) Disposal Requirements

i. The handling, treatment, use, management, and disposal of sludge and solids derived from wastewater treatment must comply with applicable provisions of CWA section 405 and USEPA regulations at 40 CFR Parts 257, 258, 501, and 503, including all monitoring, record keeping, and reporting requirements.

ii. Sludge and wastewater solids must be disposed of in a municipal solid waste landfill, reused by land application, or disposed of in a sludge-only landfill in accordance with 40 CFR Parts 258 and 503 and Title 23, Chapter 15 of the CCR. If the Discharger desires to dispose of solids and/or sludge in a different manner, a request for permit modification must be submitted to the USEPA and to this San Diego Water Board at least 180 days prior to beginning the alternative means of disposal.

iii. Sludge that is disposed of in a municipal solid waste landfill must meet the requirements of 40 CFR Part 258 pertaining to providing information to the public. In the annual self-monitoring report, the Discharger shall include the amount of sludge placed in the landfill as well as the landfill to which it was sent.

iv. All requirements of 40 CFR Part 503 and 23 CCR Chapter 15 are enforceable whether or not the requirements of those regulations are stated in an NPDES permit or any other permit issued to the Discharger.

v. The Discharger shall take all reasonable steps to prevent and minimize any sludge use or disposal in violation of this Order that has a likelihood of adversely affecting human health or the environment.

vi. Solids and sludge treatment, storage, and disposal or reuse shall not create a nuisance, such as objectionable odors or flies, and shall not result in groundwater contamination.

vii. The solids and sludge treatment and storage site shall have adequate facilities to divert surface water runoff from adjacent areas to protect the boundaries of the site from erosion, and to prevent drainage from the treatment and storage site. Adequate protection is defined as protection, at the minimum, from a 100-year storm and protection from the highest possible tidal stage that may occur.

viii. The discharge of sewage sludge and solids shall not cause waste material to be in position where it is, or can be, conveyed from the treatment and storage sites and deposited in waters of the State.

ix. The Discharger shall submit an annual report to the USEPA and the San Diego Water Board containing monitoring results and pathogen and vector attraction reduction requirements, as specified by 40 CFR Part 503. The Discharger shall also report the quantity of sludge removed from the Facility and the disposal method. This self-monitoring report shall be postmarked by February 19 of each year and report for the period of the previous calendar year.

e. Collection System

On May 2, 2006, the State Water Board adopted State Water Board Order No. 2006-0003, a Statewide General WDR for Sanitary Sewer Systems. Order No. 2006-0003 requires that all public agencies that currently own or operate sanitary sewer systems apply for coverage under the General WDR.

6. Other Special Provisions – Not Applicable

7. Compliance Schedules

The Discharger shall comply with the following time schedule to ensure that the discharge from the Facility does not cause or contribute to excursion above the Receiving Water Limitations for Bacterial Characteristics contained in section V.A.1.of this Order:

Table 12. Time Schedule for Compliance with Bacterial Characteristics

Task	Compliance Date
1. Prepare and submit a proposed work plan that outlines the tasks and the approach to be used in evaluating and selecting alternatives for ensuring compliance with Bacterial Characteristics receiving water limitations.	No later than 6 months after the adoption date of this Order
2. Submit plan and alternatives analysis for ensuring compliance with Bacterial Characteristics receiving water limitations outside the Initial Dilution Zone of the Oceanside Ocean Outfall. The proposed plan shall include a schedule for completion that reflects a realistic assessment of the shortest practicable time required to perform each task.	No later than 18 months after the adoption date of this Order
3. Complete financial arrangements for selected alternative	No later than 30 months after the adoption date of this Order
4. Initiate construction of any required facilities	No later than 36 months after the adoption date of this Order
5. Complete construction of required facilities and initiate facilities start-up	No later than 48 months after the adoption date of this Order
6. Identify and implement operational refinements and confirm compliance with Bacterial Characteristics receiving water limitations	No later than 60 months after the adoption date of this Order
7. Achieve full compliance with Bacterial Characteristics receiving water limitations outside the Initial Dilution Zone of the Oceanside Ocean Outfall	No later than 60 months after the adoption date of this Order

The Discharger shall implement the plan identified in Task 2 of the above schedule in accordance with the shortest practicable time required to complete each task, but in no case later than the Compliance Dates listed in the above schedule. The Discharger shall submit to the San Diego Water Board on or before each compliance date, the specified document or, if appropriate, a written report detailing compliance or noncompliance with the specific schedule date and task. If noncompliance is being reported, the reasons for such noncompliance shall be stated, and shall include an estimate of the date when the Discharger will be in compliance. The Discharger shall notify the San Diego Water Board by letter when it returns to compliance with the time schedule.

Progress reports shall be submitted annually by March 1, consistent with the schedule in Table E-16 of the MRP and shall continue until compliance is achieved.

VII. COMPLIANCE DETERMINATION

Compliance with the effluent limitations contained in section IV of this Order will be determined as specified below:

A. Compliance with Average Monthly Effluent Limitation (AMEL)

If the average of daily discharges over a calendar month exceeds the AMEL for a given parameter, an alleged violation will be flagged and the Discharger will be considered out of compliance for each day of that month for that parameter (e.g., resulting in 31 days of noncompliance in a 31-day month). The average of daily discharges over the calendar month that exceeds the AMEL for a parameter will be considered out of compliance for the month only. If only a single sample is taken during the calendar month and the analytical result for that sample exceeds the AMEL, the Discharger will be considered out of compliance for that calendar month. For any one calendar month during which no sample (daily discharge) is taken, no compliance determination can be made for that calendar month.

B. Compliance with Average Weekly Effluent Limitation (AWEL)

If the average of daily discharges over a calendar week (Sunday through Saturday) exceeds the AWEL for a given parameter, an alleged violation will be flagged and the Discharger will be considered out of compliance for each day of that week for that parameter, resulting in 7 days of noncompliance. The average of daily discharges over the calendar week that exceeds the AWEL for a parameter will be considered out of compliance for that week only. If only a single sample is taken during the calendar week and the analytical result for that sample exceeds the AWEL, the Discharger will be considered out of compliance for that calendar week. For any one calendar week during which no sample (daily discharge) is taken, no compliance determination can be made for that calendar week.

C. Compliance with Maximum Daily Effluent Limitation (MDEL)

The MDEL shall apply to flow weighted 24-hour composite samples. If a daily discharge exceeds the MDEL for a given parameter, an alleged violation will be flagged and the Discharger will be considered out of compliance for that parameter for that one day only within the reporting period. For any one day during which no sample is taken, no compliance determination can be made for that day.

D. Compliance with Instantaneous Minimum Effluent Limitation

The instantaneous minimum effluent concentration limitation shall apply to grab sample determinations. If the analytical result of a single grab sample is lower than the instantaneous minimum effluent limitation for a parameter, a violation will be flagged and the Discharger will be considered out of compliance for that parameter for that single sample. Non-compliance for each sample will be considered separately (e.g., the results of two grab samples taken within a calendar day that both are lower than the

instantaneous minimum effluent limitation would result in two instances of noncompliance with the instantaneous minimum effluent limitation.)

E. Compliance with Instantaneous Maximum Effluent Limitation[2]

The instantaneous maximum effluent concentration limitation**s** shall apply to grab sample determinations **and continuous turbidimeter recorded levels**. **For grab samples, if**~~If~~ the analytical result of a single ~~grab~~ sample is higher than the instantaneous maximum effluent limitation for a parameter, a violation will be flagged and the Discharger will be considered out of compliance for that parameter for that single sample. Non-compliance for each sample will be considered separately (e.g., the results of two grab samples taken within a calendar day that both exceed the instantaneous maximum effluent limitation would result in two instances of noncompliance with the instantaneous maximum effluent limitation). **For a continuous turbidimeter, turbidity shall be recorded at intervals of no more than 1-hour (i.e. recorded at least once per hour). If the instantaneous maximum recorded level for a calendar day for turbidity is higher than the instantaneous maximum effluent limitation for turbidity, a violation will be flagged and the Discharger will be considered out of compliance for turbidity for that calendar day.**

F. Compliance with 6-Month Median Effluent Limitation

If the median of daily discharges over any 180-day period exceeds the 6-month median effluent limitation for a given parameter, an alleged violation will be flagged and the Discharger will be considered out of compliance for each day of that 180-day period for that parameter. The next assessment of compliance will occur after the next sample is taken. If only a single sample is taken during a given 180-day period and the analytical result for that sample exceeds the 6-month median, the Discharger will be considered out of compliance for the 180-day period. For any 180-day period during which no sample is taken, no compliance determination can be made for the 6-month median limitation.

G. Mass and Concentration Limitations

Compliance with mass and concentration effluent limitations for the same parameter shall be determined separately with their respective limitations. When the concentration of a constituent in an effluent sample is determined to be “Not Detected” (ND) or “Detectable but not quantifiable” (DNQ), the corresponding mass emission rate (MER) determined from that sample concentration shall also be reported as “ND” or “DNQ”.

H. Percent Removal

Compliance with percent removal requirements for monthly average percent removal of carbonaceous biochemical oxygen demand and total suspended solids shall be determined separately for each wastewater treatment facility discharging through an outfall. For each wastewater treatment facility, the monthly average percent removal is

[2] Section VII.E modified by Order No. R9-2012-0042, Directive 1

the average of the calculated daily discharge percent removals only for days on which the constituent concentration is monitored in both the influent and effluent of the wastewater treatment facility at location specified in the MRP (Attachment E of this Order) within a calendar month.

The percent removal for each day shall be calculated according to the following equation:

Daily discharge percent removal = $\frac{Influent\ \ concentration - Effluent\ concentration}{Influent\ concentration} \times 100\%$

I. Ocean Plan Provisions for Table B Constituents

1. Sampling Reporting Protocols

a. The Discharger must report with each sample result the reported Minimum Level (ML) and the laboratory's current Method Detection Limit (MDL).

b. The Discharger must also report results of analytical determinations for the presence of chemical constituents in a sample using the following reporting protocols:

i. Sample results greater than or equal to the reported ML must be reported "as measured" by the laboratory (i.e., the measured chemical concentration in the sample).

ii. Sample results less than the reported ML, but greater than or equal to the laboratory's MDL, must be reported as "Detected, but Not Quantified", or DNQ. The laboratory must write the estimated chemical concentration of the sample next to DNQ as well as the words "Estimated Concentration" (may be shorted to Est. Conc.").

iii. Sample results less than the laboratory's MDL must be reported as "Not Detected", or ND.

2. Compliance Determination

Sufficient sampling and analysis shall be required to determine compliance with the effluent limitation.

a. Compliance with Single-constituent Effluent Limitations

The Discharger shall be deemed out of compliance with an effluent limitation or discharge specification if the concentration of the constituent in the monitoring sample is greater than the effluent limitation or discharge specification and greater than or equal to the ML.

b. Compliance with Effluent Limitations Expressed as a Sum of Several Constituents

The Discharger is out of compliance with an effluent limitation that applies to the sum of a group of chemicals (e.g., PCBs) if the sum of the individual pollutant concentrations is greater than the effluent limitation. Individual pollutants of the group will be considered to have a concentration of zero if the constituent is reported as ND or DNQ.

c. Multiple Sample Data Reduction.

The concentration of the pollutant in the effluent may be estimated from the result of a single sample analysis or by a measure of central tendency (arithmetic

mean, geometric mean, median, etc.) of multiple sample analyses when all sample results are quantifiable (i.e., greater than or equal to the reported ML). When one or more sample results are reported as ND or DNQ, the central tendency concentration of the pollutant shall be the median (middle) value of the multiple samples. If, in an even number of samples, one or both of the middle values is ND or DNQ, the median will be the lower of the two middle values.

d. Mass Emission Rate

The mass emission rate (MER), in pounds per day, shall be obtained from the following calculation for any calendar day:

Mass Emission Rate (lb/day) = 8.34 x Q x C

In which Q and C are the flow rate in million gallons per day and the constituent concentration in mg/L, respectively, and 8.34 is a conversion factor (lb/gallon of water). If a composite sample is taken, then C is the concentration measured in the composite sample and Q is the average flow rate occurring during the period over which the samples are composited.

e. Bacterial Standards and Analysis

i. The geometric mean used for determining compliance with bacterial standards is calculated with the following equation:

Geometric Mean = $(C_1 \times C_2 \times \ldots \times C_n)^{1/n}$

Where n is the number of days samples were collected during the period and C is the concentration of bacteria (CFU/100 mL) found on each day of sampling.

ii. For all bacterial analyses, sample dilutions should be performed so the range of values extends from 2 to 16,000 CFU (colony-forming units). The detection methods used for each analysis shall be reported with the results of the analysis. Detection methods used for coliforms (total and fecal) shall be those listed in 40 CFR Part 136 or any improved method determined by the San Diego Water Board (and approved by USEPA) to be appropriate. Detection methods used for enterococcus shall be those presented in USEPA publication USEPA 600/4-85/076, *Test Methods for Escherichia coli and Enterococci in Water by Membrane Filter Procedure*, listed under 40 CFR Part 136, and any other method approved by the San Diego Water Board.

f. Single Operational Upset

A single operational upset (SOU) that leads to simultaneous violations or more than one pollutant parameter shall be treated as a single violation and limits the Discharger's liability in accordance with the following conditions:

i. A SOU is broadly defined as a single unusual event that temporarily disrupts the usually satisfactory operation of a system in such a way that it results in violation of multiple pollutant parameters.

ii. A Discharger may assert SOU to limit liability only for those violations which the Discharger submitted notice of the upset as required in Provision H of Attachment D of this Order.

iii. For purposes outside of CWC section 13385(h) and (i), determination of compliance and civil liability (including any more specific definition of SOU), the requirements for Dischargers to assert the SOU limitation of liability, and the manner of counting violations, shall be in accordance with the USEPA Memorandum "Issuance of Guidance Interpreting Single Operational Upset" (September 27, 1989).

iv. For purposes of CWC section 13385(h) and (i), determination of compliance and civil liability (including any more specific definition of SOU, the requirements for Dischargers to assert the SOU) limitation of liability, and the manner of counting violations shall be in accordance with CWC section 13385(f)(2).

J. Chronic Toxicity

Chronic toxicity is used to measure the acceptability of waters for supporting a healthy marine biota until approved methods are developed to evaluate biological response. Compliance with the chronic toxicity performance goal established in section IV.B.2 of this Order for Discharge Point No. 001 shall be determined using critical life stage toxicity tests in accordance with procedures prescribed by the Ocean Plan and restated in the MRP (Attachment E of this Order). Chronic toxicity shall be expressed as Toxic Units Chronic (TUc), where:

$$TUc = 100 / NOEL$$

where NOEL is the No Observed Effect Level and is expressed as the maximum percent of effluent that causes no observable effect on a test organism, as determined by the result of a critical life stage toxicity test.

ATTACHMENT A – DEFINITIONS

Acute Toxicity

a. Acute Toxicity (TUa)
Expressed in Toxic Units Acute (TUa)

$$TUa = \frac{100}{\text{96-hr LC}_{50\%}}$$

b. Lethal Concentration 50% (LC 50)

LC 50 (percent waste giving 50% survival of test organisms) shall be determined by static or continuous flow bioassay techniques using standard marine test species as specified in 2005 California Ocean Plan (hereinafter Ocean Plan) Appendix III. If specific identifiable substances in wastewater can be demonstrated by the discharger as being rapidly rendered harmless upon discharge to the marine environment, but not as a result of dilution, the LC 50 may be determined after the test samples are adjusted to remove the influence of those substances.

When it is not possible to measure the 96-hour LC 50 due to greater than 50 percent survival of the test species in 100 percent waste, the toxicity concentration shall be calculated by the expression:

$$TUa = \frac{\log (100 - S)}{1.7}$$

where:

S = percentage survival in 100% waste. If S > 99, TUa shall be reported as zero.

Anti-Backsliding

Provisions in the Clean Water Act (CWA) and USEPA regulations [CWA 303 (d) (4); CWA 402 (c); CFR 122.44 (1)] that require a reissued permit to be as stringent as the previous permit with some exceptions.

Antidegradation.

Policies which ensure protection of water quality for a particular body where the water quality exceeds levels necessary to protect fish and wildlife propagation and recreation on and in the water. This also includes special protection of waters designated as outstanding natural resource waters. Antidegradation plans are adopted by the State to minimize adverse effects on water.

Applicable Standards and Limitations

All State, interstate, and federal standards and limitations to which a discharge, a sewage sludge use or disposal practice, or a related activity is subject under the CWA, including effluent limitations, water quality standards, standards of performance, toxic effluent standards

or prohibitions, best management practices, pretreatment standards, and standards for sewage sludge use or disposal under sections 301, 302, 303, 304, 306, 307, 308, 403, and 405 of CWA.

Areas of Special Biological Significance (ASBS)
Those areas designated by the State Water Board as ocean areas requiring protection of species or biological communities to the extent that alteration of natural water quality is undesirable. All Areas of Special Biological Significance are also classified as a subset of STATE WATER QUALITY PROTECTION AREAS.

Average Monthly Effluent Limitation (AMEL)
The highest allowable average of daily discharges over a calendar month, calculated as the sum of all daily discharges measured during a calendar month divided by the number of daily discharges measured during that month.

Average Weekly Effluent Limitation (AWEL)
The highest allowable average of daily discharges over a calendar week (Sunday through Saturday), calculated as the sum of all daily discharges measured during a calendar week divided by the number of daily discharges measured during that week.

Beneficial Uses of waters of the State may be protected against quality degradation include, but are not limited to, domestic, municipal, agricultural and industrial supply; power generation; recreation; aesthetic enjoyment; navigation; and preservation and enhancement of fish, wildlife, and other aquatic resources or preserves.

Best Management Practices (BMPs)
Schedules of activities, prohibitions of practices, maintenance procedures, and other management practices to prevent or reduce the pollution of waters of the United States. BMPs also include treatment requirements, operating procedures, and practices to control plant site runoff, spillage or leaks, sludge or waste disposal, or drainage from raw material storage.

Best Professional Judgment (BPJ)
The method used by permit writers to develop technology-based NPDES permit conditions on a case-by-case basis using all reasonably available and relevant data.

Bioaccumulative Pollutants
Those substances taken up by an organism from its surrounding medium through gill membranes, epithelial tissue, or from food and subsequently concentrated and retained in the body of the organism.

Bioassay
A test used to evaluate the relative potency of a chemical or a mixture of chemicals by comparing its effect on a living organism with the effect of a standard preparation on the same type of organism.

Biochemical Oxygen Demand (BOD)
A measurement of the amount of oxygen utilized by the decomposition of organic material, over a specified time period (usually 5 days) in a wastewater sample; it is used as a measurement of the readily decomposable organic content of a wastewater.

Biosolids
Sewage sludge that is used or disposed through land application, surface disposal, incineration, or disposal in a municipal solid waste landfill. Sewage sludge is defined as solid, semi-solid, or liquid untreated residue generated during the treatment of domestic sewage in a treatment facility.

Carbonaceous Biochemical Oxygen Demand (CBOD)
The measurement of oxygen required for carbonaceous oxidation of a nonspecific mixture of organic compounds. Interference caused by nitrifying bacteria in the standard 5-day BOD test is eliminated by suppressing the nitrification reaction.

Certifying Official
All applications, including NOIs, must be signed as follows:

For a corporation: By a responsible corporate officer, which means: (i) a president, secretary, treasurer, or vice-president of the corporation in charge of a principal business function, or any other person who performs similar policy or decision making functions for the corporation, or (ii) the manager of one or more manufacturing, production, or operating facilities, provided, the manager is authorized to make management decisions which govern the operation of the regulated facility including having the explicit or implicit duty of making major capital investment recommendations, and initiating and directing other comprehensive measures to assure long term environmental compliance with environmental laws and regulations; the manager can ensure that the necessary systems are established or actions taken to gather complete and accurate information for permit application requirements; and where authority to sign documents has been assigned or delegated to the manager in accordance with corporate procedures.

For a partnership or sole proprietorship: By a general partner or the proprietor, respectively; or

For a municipality, state, federal, or other public agency: By either a principal executive officer or ranking elected official. A principal executive officer of a federal agency includes (i) the chief executive officer of the agency, or (ii) a senior executive officer having responsibility for the overall operations of a principal geographic unit of the agency.

Chemical Oxygen Demand (COD)
A measure of the oxygen-consuming capacity of inorganic and organic matter present in wastewater. COD is expressed as the amount of oxygen consumed in mg/L. Results do not necessarily correlate to the biochemical oxygen demand (BOD) because the chemical oxidant may react with substances that bacteria do not stabilize.

Chlordane
Shall mean the sum of chlordane-alpha, chlordane-gamma, chlordene-alpha, chlordene-gamma, nonachlor-alpha, nonachlor-gamma, and oxychlordane.

Chronic Toxicity
This parameter shall be used to measure the acceptability of waters for supporting a healthy marine biota until improved methods are developed to evaluate biological response.

a. Chronic Toxicity (TUc)

Expressed as Toxic Units Chronic (TUc)

$$TUc = \frac{100}{NOEL}$$

b. No Observed Effect Level (NOEL)

The NOEL is expressed as the maximum percent effluent or receiving water that causes no observable effect on a test organism, as determined by the result of a critical life stage toxicity test listed in Ocean Plan Appendix II.

Composite Sample
Sample composed of two or more discrete samples of at least 100 milliliters collected at periodic intervals during the operating hours of a facility over a 24-hour period. The aggregate sample will reflect the average water quality covering the compositing or sample period. For volatile pollutants, aliquots must be combined in the laboratory immediately before analysis. The composite must be flow proportional; either the time interval between each aliquot or the volume of each aliquot must be proportional to either stream flow at the time of sampling or the total stream flow since the collection of the previous aliquot. Aliquots may be collected manually or automatically.

Conventional Pollutants
Pollutants typical of municipal sewage, and for which municipal secondary treatment plants are typically designed; defined at 40 CFR 401.16 as BOD, TSS, fecal coliform bacteria, oil and grease, and pH.

Daily Discharge
Daily Discharge is defined as either: (1) the total mass of the constituent discharged over the calendar day (12:00 am through 11:59 pm) or any 24-hour period that reasonably represents a calendar day for purposes of sampling (as specified in the permit), for a constituent with limitations expressed in units of mass or; (2) the unweighted arithmetic mean measurement of the constituent over the day for a constituent with limitations expressed in other units of measurement (e.g., concentration).

The daily discharge may be determined by the analytical results of a composite sample taken over the course of one day (a calendar day or other 24-hour period defined as a day) or by the

arithmetic mean of analytical results from one or more grab samples taken over the course of the day.

For composite sampling, if 1 day is defined as a 24-hour period other than a calendar day, the analytical result for the 24-hour period will be considered as the result for the calendar day in which the 24-hour period ends.

Daily Maximum Limit
The maximum allowable daily discharge of pollutant. Where daily maximum limitations are expressed in units of mass, the daily discharge is the total mass discharged over the course of the 24-hour period. Where daily maximum limitations are expressed in terms of a concentration, the daily discharge is the arithmetic average measurement of the pollutant concentration derived from all measurements taken that 24-hour period.

DDT
Shall mean the sum of 4,4'DDT, 2,4'DDT, 4,4'DDE, 2,4'DDE, 4,4'DDD, and 2,4'DDD.

Degrade (Degradation)
Degradation shall be determined by comparison of the waste field and reference site(s) for characteristic species diversity, population density, contamination, growth anomalies, debility, or supplanting of normal species by undesirable plant and animal species. Degradation occurs if there are significant differences in any of three major biotic groups, namely, demersal fish, benthic invertebrates, or attached algae. Other groups may be evaluated where benthic species are not affected, or are not the only ones affected.

Detected, but Not Quantified (DNQ)
Sample results that are less than the reported Minimum Level, but greater than or equal to the laboratory's MDL.

Dilution Credit
The amount of dilution granted to a discharge in the calculation of a water quality-based effluent limitation, based on the allowance of a specified mixing zone. It is calculated from the dilution ratio or determined through conducting a mixing zone study or modeling of the discharge and receiving water.

Dilution Ratio T
The critical low flow of the upstream receiving water divided by the flow of the effluent discharged.

Dichlorobenzenes
Shall mean the sum of 1,2- and 1,3-dichlorobenzene.

Discharge when used without qualification means the discharge of a pollutant. Discharge of a pollutant means:

1. Any addition of any pollutant or combination of pollutants to waters of the United States from any point source, or

2. Any addition of any pollutant or combination of pollutants to the waters of the contiguous zone or the ocean from any point source other than a vessel or other floating craft that is being used as a means of transportation.

This definition includes additions of pollutants into waters of the United States from: surface runoff which is collected or channeled by man; discharges through pipes, sewers, or other conveyances owned by a state, municipality, or other person which do not lead to a treatment works; and discharges through pipes, sewers, or other conveyances, leading into privately owned treatment works. This term does not include an addition of pollutants by any indirect Discharger.

Discharge Monitoring Report (DMR) means the USEPA uniform form, including any subsequent additions, revisions, or modifications for the reporting of self-monitoring results by permittees. DMRs must be used by approved states as well as by USEPA. The USEPA will supply DMRs to any approved state upon request. The USEPA national forms may be modified to substitute the state agency name, address, logo, and other similar information, as appropriate, in place of USEPA's.

Downstream Ocean Waters
Waters downstream with respect to ocean currents.

Dredged Material
Any material excavated or dredged from the navigable waters of the United States, including material otherwise referred to as “spoil”.

Effluent Limitation
Any restriction imposed by an Order on quantities, discharge rates, and concentrations of pollutants that are discharged from point sources into waters of the United States, the waters of the contiguous zone, or the ocean.

Enclosed Bays
Indentations along the coast that enclose an area of oceanic water within distinct headlands or harbor works. Enclosed bays include all bays where the narrowest distance between headlands or outermost harbor works is less than 75 percent of the greatest dimension of the enclosed portion of the bay. This definition includes but is not limited to: Humboldt Bay, Bodega Harbor, Tomales Bay, Drakes Estero, San Francisco Bay, Morro Bay, Los Angeles Harbor, Upper and Lower Newport Bay, Mission Bay, and San Diego Bay.

Endosulfan
The sum of endosulfan-alpha and -beta and endosulfan sulfate.

Estuaries and Coastal Lagoons are waters at the mouths of streams that serve as mixing zones for fresh and ocean waters during a major portion of the year. Mouths of streams that are temporarily separated from the ocean by sandbars shall be considered as estuaries. Estuarine waters will generally be considered to extend from a bay or the open ocean to the upstream limit of tidal action but may be considered to extend seaward if significant mixing of fresh and salt water occurs in the open coastal waters. The waters described by this definition include but are not limited to the Sacramento-San Joaquin Delta as defined by section 12220

of the California Water Code (CWC), Suisun Bay, Carquinez Strait downstream to Carquinez Bridge, and appropriate areas of the Smith, Klamath, Mad, Eel, Noyo, and Russian Rivers.

Grab Sample
An individual sample of at least 100 milliliters collected at a randomly selected time over a period not exceeding 15 minutes. The sample is taken from a waste stream on a one-time basis without consideration of the flow rate of the waste stream and without consideration of time of day.

Halomethanes shall mean the sum of bromoform, bromomethane (methyl bromide) and chloromethane (methyl chloride).

HCH shall mean the sum of the alpha, beta, gamma (Lindane) and delta isomers of hexachlorocyclohexane.

Initial Dilution
The process that results in the rapid and irreversible turbulent mixing of wastewater with ocean water around the point of discharge.

For a submerged buoyant discharge, characteristic of most municipal and industrial wastes that are released from the submarine outfalls, the momentum of the discharge and its initial buoyancy act together to produce turbulent mixing. Initial dilution in this case is completed when the diluting wastewater ceases to rise in the water column and first begins to spread horizontally.

For shallow water submerged discharges, surface discharges, and non-buoyant discharges, characteristic of cooling water wastes and some individual discharges, turbulent mixing results primarily from the momentum of discharge. Initial dilution, in these cases, is considered to be completed when the momentum induced velocity of the discharge ceases to produce significant mixing of the waste, or the diluting plume reaches a fixed distance from the discharge to be specified by the San Diego Water Board, whichever results in the lower estimate for initial dilution.

Instantaneous Maximum Effluent Limitation
The highest allowable value for any single grab sample or aliquot (i.e., each grab sample or aliquot is independently compared to the instantaneous maximum limitation).

Instantaneous Minimum Effluent Limitation
The lowest allowable value for any single grab sample or aliquot (i.e., each grab sample or aliquot is independently compared to the instantaneous minimum limitation).

Kelp Beds
For purposes of the bacteriological standards of the Ocean Plan, are significant aggregations of marine algae of the genera Macrocystis and Nereocystis. Kelp beds include the total foliage canopy of Macrocystis and Nereocystis plants throughout the water column.

Mariculture
The culture of plants and animals in marine waters independent of any pollution source.

Material
(a) In common usage: (1) the substance or substances of which a thing is made or composed (2) substantial; (b) For purposes of the Ocean Plan relating to waste disposal, dredging and the disposal of dredged material and fill, MATERIAL means matter of any kind or description which is subject to regulation as waste, or any material dredged from the navigable waters of the United States. See also, DREDGED MATERIAL.

Maximum Daily Effluent Limitation (MDEL)
The highest allowable daily discharge of a pollutant.

Method Detection Limit (MDL)
The minimum concentration of a substance that can be measured and reported with 99 percent confidence that the analyte concentration is greater than zero, as defined in Title 40 of the Code of Federal Regulations, Part 136, Attachment B.

Minimum Level (ML)
The concentration at which the entire analytical system must give a recognizable signal and acceptable calibration point. The ML is the concentration in a sample that is equivalent to the concentration of the lowest calibration standard analyzed by a specific analytical procedure, assuming that all the method specified sample weights, volumes, and processing steps have been followed.

Natural Light
Reduction of natural light may be determined by the San Diego Water Board by measurement of light transmissivity or total irradiance, or both, according to the monitoring needs of the San Diego Water Board.

Not Detected (ND)
Those sample results less than the laboratory's MDL.

Nuisance
CWC section 13050, subdivision (m), defines nuisance as anything which meets all of the following requirements:

1. Is injurious to health, or is indecent or offensive to the senses, or an obstruction to the free use of property, so as to interfere with the comfortable enjoyment of life or property.
2. Affects at the same time an entire community or neighborhood, or any considerable number of persons, although the extent of the annoyance or damage inflicted upon individuals may be unequal.
3. Occurs during, or as a result of, the treatment or disposal of wastes.

Ocean Waters
The territorial marine waters of the State as defined by California law to the extent these waters are outside of enclosed bays, estuaries, and coastal lagoons. If a discharge outside the territorial waters of the State could affect the quality of the waters of the State, the discharge may be regulated to assure no violation of the Ocean Plan will occur in ocean waters.

PAHs (polynuclear aromatic hydrocarbons)
The sum of acenaphthylene, anthracene, 1,2-benzanthracene, 3,4-benzofluoranthene, benzo[k]fluoranthene, 1,12-benzoperylene, benzo[a]pyrene, chrysene, dibenzo[ah]anthracene, fluorene, indeno[1,2,3-cd]pyrene, phenanthrene and pyrene.

PCBs (polychlorinated biphenyls)
The sum of chlorinated biphenyls whose analytical characteristics resemble those of Aroclor-1016, Aroclor-1221, Aroclor-1232, Aroclor-1242, Aroclor-1248, Aroclor-1254 and Aroclor-1260.

Pollutant Minimization Program (PMP)
PMP means waste minimization and pollution prevention actions that include, but are not limited to, product substitution, waste stream recycling, alternative waste management methods, and education of the public and businesses. The goal of the PMP shall be to reduce all potential sources of Ocean Plan Table B pollutants through pollutant minimization (control) strategies, including pollution prevention measures as appropriate, to maintain the effluent concentration at or below the water quality-based effluent limitation. Pollution prevention measures may be particularly appropriate for persistent bioaccumulative priority pollutants where there is evidence that beneficial uses are being impacted. The San Diego Water Board may consider cost effectiveness when establishing the requirements of a PMP. The completion and implementation of a Pollution Prevention Plan, if required pursuant to CWC section 13263.3(d), shall be considered to fulfill the PMP requirements.

Publicly Owned Treatment Works (POTW)
The term Publicly Owned Treatment Works or POTW means a treatment works as defined by section 212 of the Clean Water Act, which is owned by a State or municipality [as defined by section 502(4) of the Act]. This definition includes any devices and systems used in the storage, treatment, recycling and reclamation of municipal sewage or industrial wastes of a liquid nature. It also includes sewers, pipes and other conveyances only if they convey wastewater to a POTW Treatment Plant. The term also means the municipality as defined in section 502(4) of the Act, which has jurisdiction over the Indirect Discharges to and the discharges from such a treatment works.

POTW Treatment Plant
The term POTW Treatment Plant means that portion of the POTW which is designed to provide treatment (including recycling and reclamation) of municipal sewage and industrial waste.

Reported Minimum Level
The ML (and its associated analytical method) chosen by the Discharger for reporting and compliance determination from the MLs included in this Order. The MLs included in this Order correspond to approved analytical methods for reporting a sample result that are selected by the San Diego Water Board either from Appendix II of the Ocean Plan in accordance with section III.C.5.a of the Ocean Plan or established in accordance with section III.C.5.b of the Ocean Plan. The ML is based on the proper application of method-based analytical procedures for sample preparation and the absence of any matrix interferences. Other factors may be applied to the ML depending on the specific sample preparation steps employed. For example, the treatment typically applied in cases where there are matrix-effects is to dilute the

sample or sample aliquot by a factor of ten. In such cases, this additional factor must be applied to the ML in the computation of the reported ML.

Sanitary Sewer Overflow (SSO)
Any overflow, spill, release, discharge or diversion of untreated or partially treated wastewater from a sanitary sewer system. SSOs include:

1. Overflows or releases of untreated or partially treated wastewater that reach waters of the United States;
2. Overflows or releases of untreated or partially treated wastewater that do not reach waters of the United States; and
3. Wastewater backups into buildings and on private property that are caused by blockages or flow conditions within the publicly/federally-owned portion of a sanitary sewer system.

SSO Categories

1. **Category 1** - All discharges of sewage resulting from a failure in the Discharger's sanitary sewer system that:

   a. Equal or exceed 1000 gallons, or

   b. Result in a discharge to a drainage channel and/or surface water; or

   c. Discharge to a storm drainpipe that was not fully captured and returned to the sanitary sewer system.

2. **Category 2** – All other discharges of sewage resulting from a failure in the Discharger's sanitary sewer system.

3. **Private Lateral Sewage Discharges** – Sewage discharges that are caused by blockages or other problems within a privately owned lateral.

SSO Reporting System
Online spill reporting system that is hosted, controlled, and maintained by the State Water Board. The web address for this site is http://ciwqs.waterboards.ca.gov. This online database is maintained on a secure site and is controlled by unique usernames and passwords.

Sanitary Sewer System
Any system of pipes, pump stations, sewer lines, or other conveyances, upstream of a wastewater treatment plant headworks used to collect and convey wastewater to the wastewater treatment facility. Temporary storage and conveyance facilities (such as vaults, temporary piping, construction trenches, wet wells, impoundments, tanks, etc.) are considered to be part of the sanitary sewer system, and discharges into these temporary storage facilities are not considered to be SSOs

Satellite Collection System
The portion, if any, of a sanitary sewer system owned or operated by a different public agency than the agency that owns and operates the wastewater treatment facility that a sanitary sewer system is tributary to.

Secondary Treatment Standards
Technology-based requirements for direct discharging municipal sewage treatment facilities. Standards are based on a combination of physical and biological processes typical for the treatment of pollutants in municipal sewage. Standards are expressed as a minimum level of effluent quality in terms of: BOD_5, total suspended solids (TSS), and pH (except as provided for special considerations and treatment equivalent to secondary treatment).

Shellfish
Organisms identified by the State of California Department of Public Health as shellfish for public health purposes (i.e., mussels, clams and oysters).

Significant Difference
Defined as a statistically significant difference in the means of two distributions of sampling results at the 95 percent confidence level.

Six-month Median Effluent Limitation
The highest allowable moving median of all daily discharges for any 180-day period.

State Water Quality Protection Areas (SWQPAs)
Non-terrestrial marine or estuarine areas designated to protect marine species or biological communities from an undesirable alteration in natural water quality. All AREAS OF SPECIAL BIOLOGICAL SIGNIFICANCE (ASBS) that were previously designated by the State Water Board in Resolution Nos. 74-28, 74-32, and 75-61 are now also classified as a subset of State Water Quality Protection Areas and require special protections afforded by the Ocean Plan.

Technology-Based Effluent Limit
A permit limit for a pollutant that is based on the capability of a treatment method to reduce the pollutant to a certain concentration.

Toxic Pollutant
Pollutants or combinations of pollutants, including disease-causing agents, which after discharge and upon exposure, ingestion, inhalation or assimilation into any organism, either directly from the environment or indirectly by ingestion through food chains, will, on the basis of information available to the Administrator of USEPA, cause death, disease, behavioral abnormalities, cancer, genetic mutations, physiological malfunctions, (including malfunctions in reproduction) or physical deformations, in such organisms or their offspring. Toxic pollutants also include those pollutants listed by the Administrator under CWA section 307(a)(1) or any pollutant listed under section 405 (d) which relates to sludge management.

Toxicity Reduction Evaluation (TRE)
A study conducted in a step-wise process designed to identify the causative agents of effluent or ambient toxicity, isolate the sources of toxicity, evaluate the effectiveness of toxicity control

options, and then confirm the reduction in toxicity. The first steps of the TRE consist of the collection of data relevant to the toxicity, including additional toxicity testing, and an evaluation of facility operations and maintenance practices, and best management practices. A Toxicity Identification Evaluation (TIE) may be required as part of the TRE, if appropriate. (A TIE is a set of procedures to identify the specific chemical(s) responsible for toxicity. These procedures are performed in three phases (characterization, identification, and confirmation) using aquatic organism toxicity tests).

Untreated or Partially Treated Wastewater
Any volume of waste discharged from the sanitary sewer system upstream of a wastewater treatment plant headworks.

Waste
As used in the Ocean Plan, waste includes a Discharger's total discharge, of whatever origin (i.e., gross, not net, discharge).

Water Quality Control Plan
consists of a designation or establishment for the waters within a specified area of all of the following:

1. Beneficial uses to be protected.
2. Water quality objectives.
3. A program of implementation needed for achieving water quality objectives.

Water Quality Objectives means the limits or levels of water quality constituents or characteristics which are established for the reasonable protection of beneficial uses of water or the prevention of nuisance within a specific area.

Water Reclamation
The treatment of wastewater to render it suitable for reuse, the transportation of treated wastewater to the place of use, and the actual use of treated wastewater for a direct beneficial use or controlled use that would not otherwise occur.

Whole Effluent Toxicity (WET)
The total toxic effect of an effluent measured directly with a toxicity test.

Attachment B – Map

Mission Basin Desalting Facility (MBDF) is also known as Mission Basin Groundwater Purification Facility

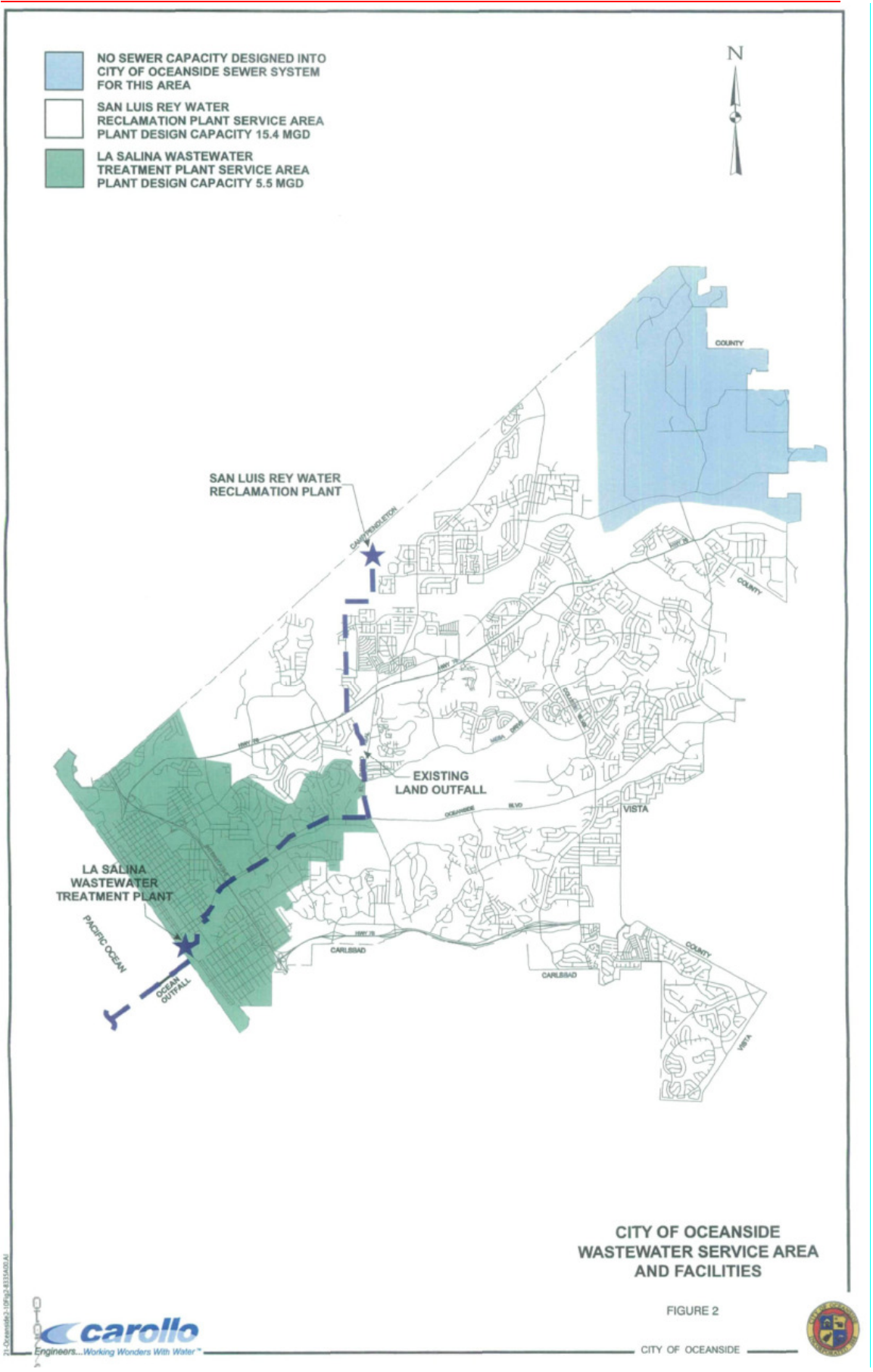
NO SEWER CAPACITY DESIGNED INTO CITY OF OCEANSIDE SEWER SYSTEM FOR THIS AREA
SAN LUIS REY WATER RECLAMATION PLANT SERVICE AREA PLANT DESIGN CAPACITY 15.4 MGD
LA SALINA WASTEWATER TREATMENT PLANT SERVICE AREA PLANT DESIGN CAPACITY 5.5 MGD
N
COUNTY
SAN LUIS REY WATER RECLAMATION PLANT
CAMP PENDLETON
EXISTING LAND OUTFALL
VISTA
LA SALINA WASTEWATER TREATMENT PLANT
PACIFIC OCEAN
OCEAN OUTFALL
CARLSBAD
CITY OF OCEANSIDE WASTEWATER SERVICE AREA AND FACILITIES
FIGURE 2
carollo
Engineers...Working Wonders With Water™
CITY OF OCEANSIDE

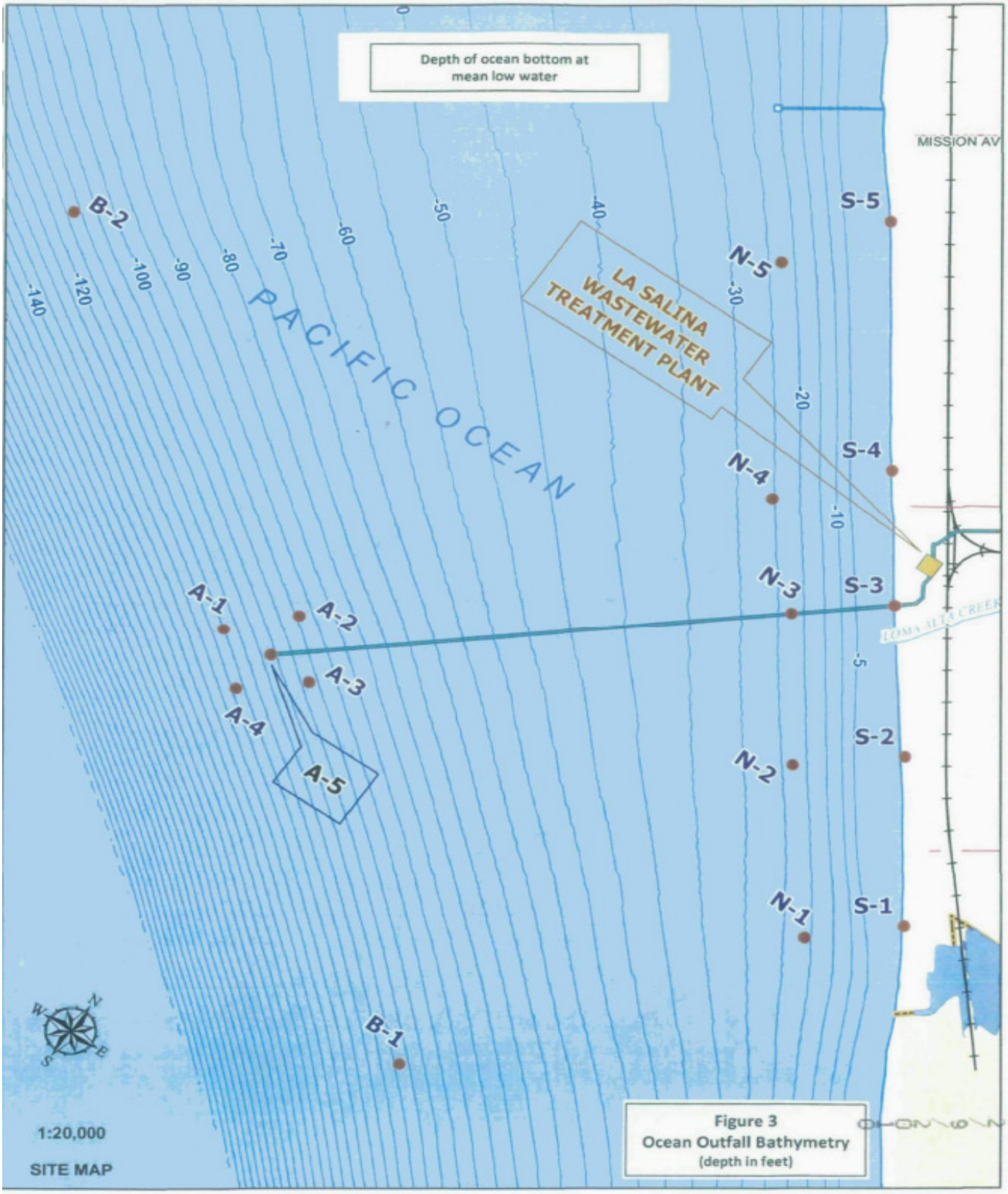

Figure 3
Ocean Outfall Bathymetry
(depth in feet)

Attachment C – Flow Schematic

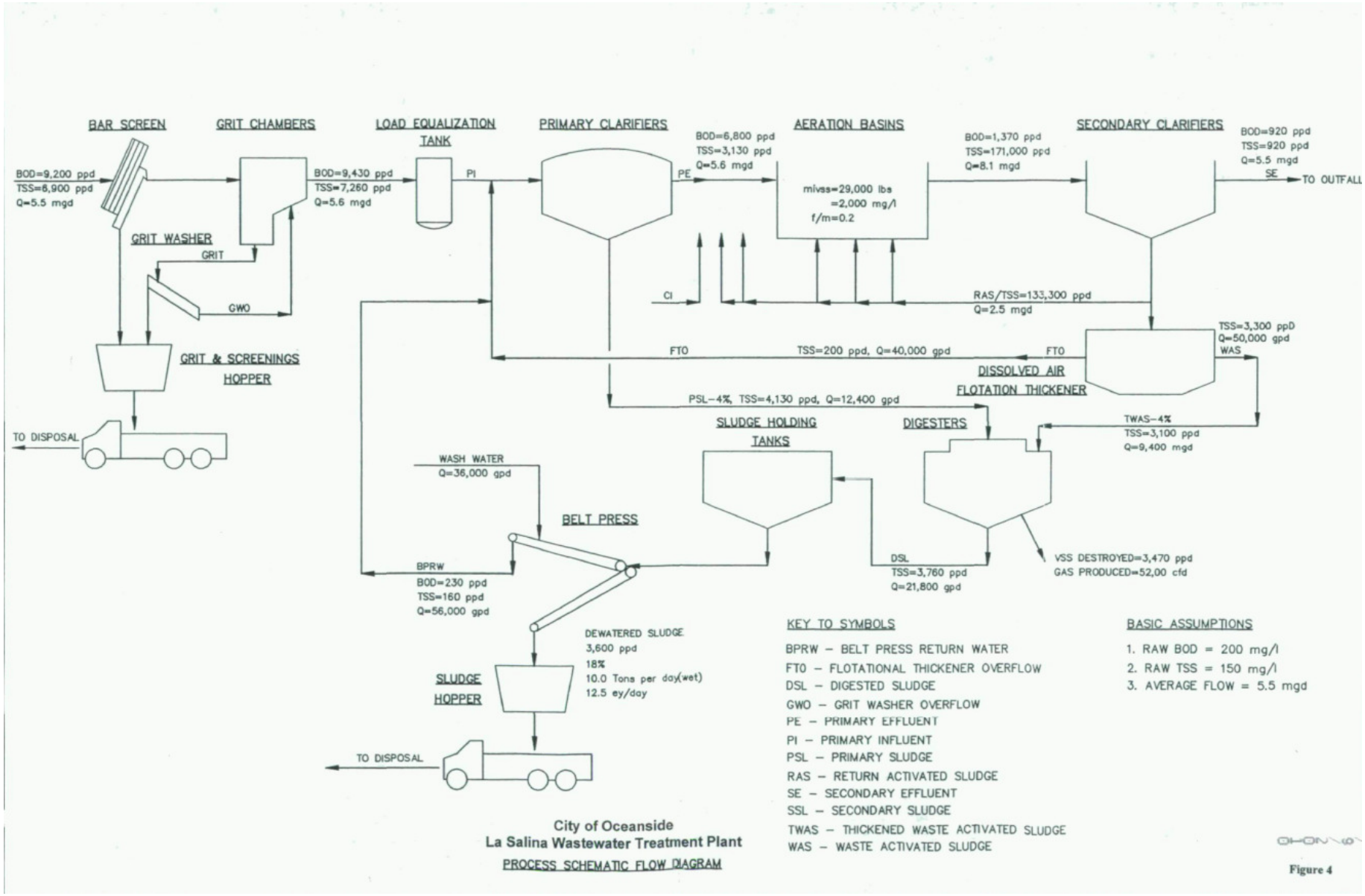

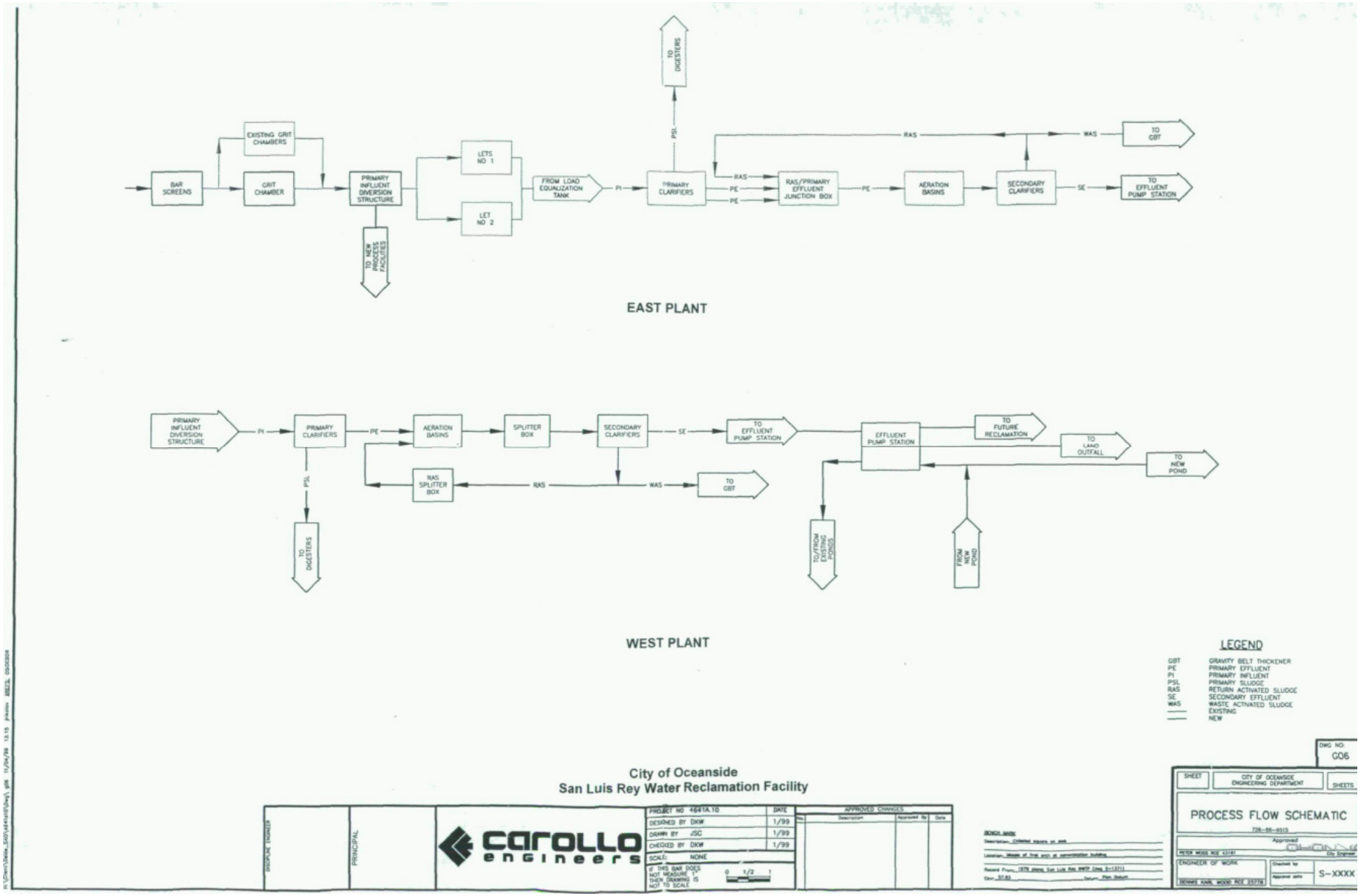
EAST PLANT
BAR SCREENS
EXISTING GRIT CHAMBERS
GRIT CHAMBER
PRIMARY INFLUENT DIVERSION STRUCTURE
TO NEW PROCESS FACILITIES
LETS NO 1
LET NO 2
FROM LOAD EQUALIZATION TANK
PI
PRIMARY CLARIFIERS
PSL
TO DIGESTERS
RAS
PE
RAS/PRIMARY EFFLUENT JUNCTION BOX
AERATION BASINS
SECONDARY CLARIFIERS
WAS
TO GBT
SE
TO EFFLUENT PUMP STATION
WEST PLANT
PRIMARY INFLUENT DIVERSION STRUCTURE
PRIMARY CLARIFIERS
AERATION BASINS
SPLITTER BOX
SECONDARY CLARIFIERS
RAS SPLITTER BOX
EFFLUENT PUMP STATION
TO FUTURE RECLAMATION
TO LAND OUTFALL
TO NEW POND
TO/FROM EXISTING PONDS
FROM NEW POND
LEGEND
GBT GRAVITY BELT THICKENER
PE PRIMARY EFFLUENT
PI PRIMARY INFLUENT
PSL PRIMARY SLUDGE
RAS RETURN ACTIVATED SLUDGE
SE SECONDARY EFFLUENT
WAS WASTE ACTIVATED SLUDGE
EXISTING
NEW
City of Oceanside
San Luis Rey Water Reclamation Facility
carollo engineers
PROJECT NO 4641A.10
DESIGNED BY DKW 1/99
DRAWN BY JSC 1/99
CHECKED BY DKW 1/99
SCALE: NONE
IF THIS BAR DOES NOT MEASURE 1" THEN DRAWING IS NOT TO SCALE
APPROVED CHANGES
DWG NO G06
CITY OF OCEANSIDE ENGINEERING DEPARTMENT
PROCESS FLOW SCHEMATIC
S-XXXX

Mission Basin Desalting Facility

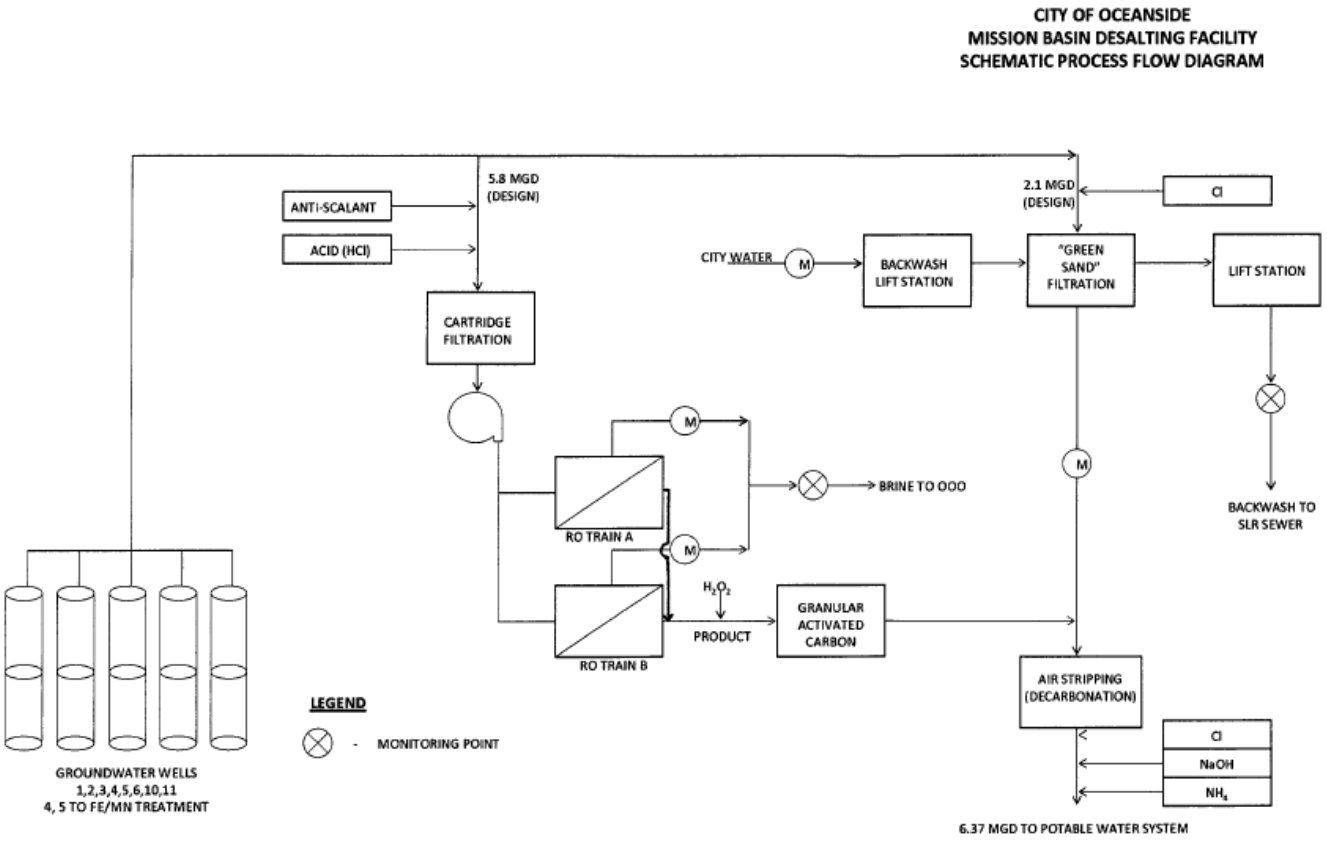

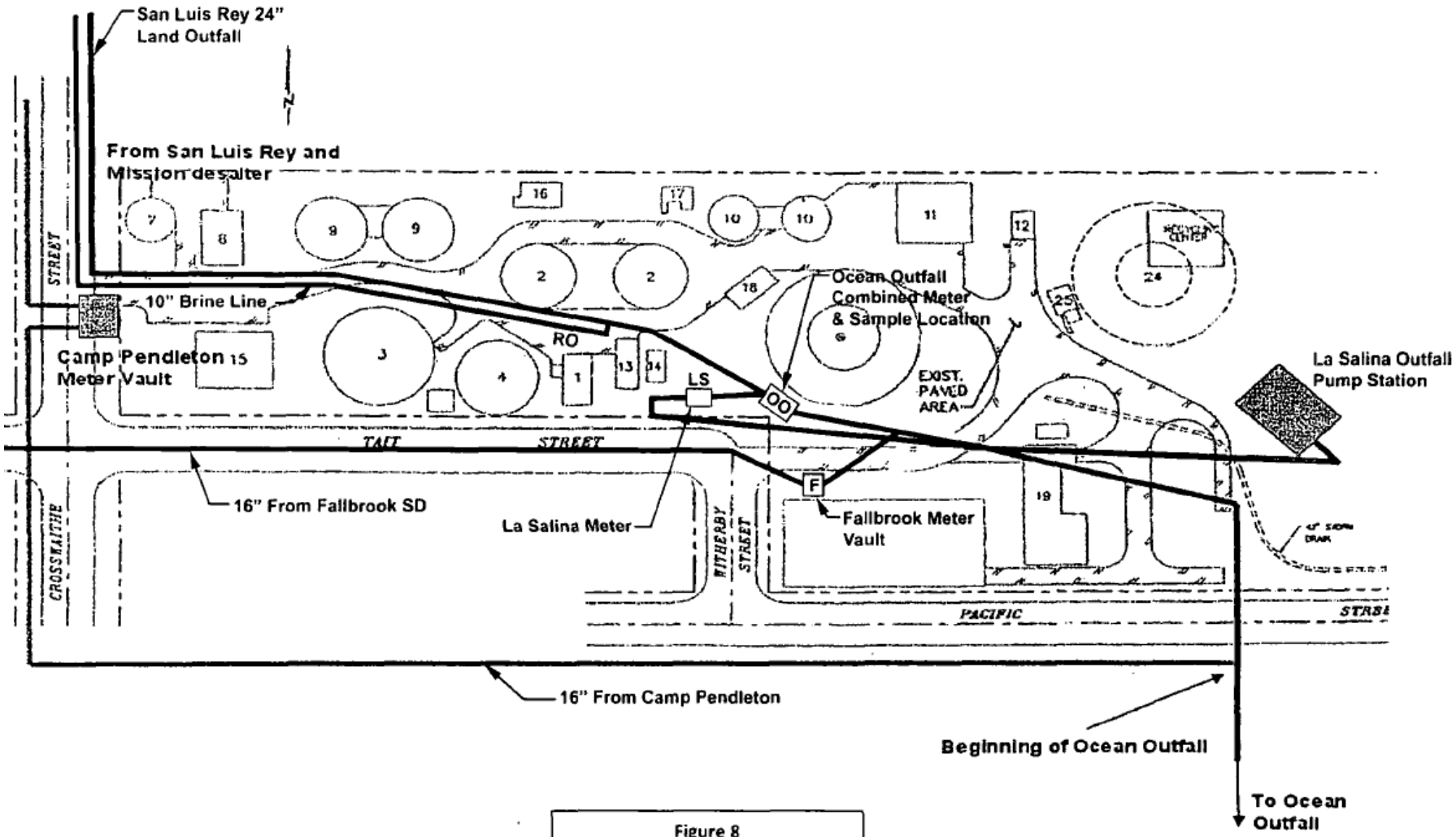

Figure 8
Location of Outfall Pipelines
La Salina WTP

ATTACHMENT D – STANDARD PROVISIONS

I. STANDARD PROVISIONS – PERMIT COMPLIANCE

A. Duty to Comply

1. The Discharger must comply with all of the conditions of this Order. Any noncompliance constitutes a violation of the Clean Water Act (CWA) and the California Water Code (CWC) and is grounds for enforcement action, for permit termination, revocation and reissuance, or modification; or denial of a permit renewal application. (40 CFR 122.41(a))

2. The Discharger shall comply with effluent standards or prohibitions established under section 307(a) of the CWA for toxic pollutants and with standards for sewage sludge use or disposal established under section 405(d) of the CWA within the time provided in the regulations that establish these standards or prohibitions, even if this Order has not yet been modified to incorporate the requirement. (40 CFR 122.41(a)(1))

B. Need to Halt or Reduce Activity Not a Defense

It shall not be a defense for a Discharger in an enforcement action that it would have been necessary to halt or reduce the permitted activity in order to maintain compliance with the conditions of this Order. (40 CFR 122.41(c))

C. Duty to Mitigate

The Discharger shall take all reasonable steps to minimize or prevent any discharge or sludge use or disposal in violation of this Order that has a reasonable likelihood of adversely affecting human health or the environment. (40 CFR 122.41(d))

D. Proper Operation and Maintenance

The Discharger shall at all times properly operate and maintain all facilities and systems of treatment and control (and related appurtenances) which are installed or used by the Discharger to achieve compliance with the conditions of this Order. Proper operation and maintenance also includes adequate laboratory controls and appropriate quality assurance procedures. This provision requires the operation of backup or auxiliary facilities or similar systems that are installed by a Discharger only when necessary to achieve compliance with the conditions of this Order. (40 CFR 122.41(e))

E. Property Rights

1. This Order does not convey any property rights of any sort or any exclusive privileges. (40 CFR 122.41(g))

2. The issuance of this Order does not authorize any injury to persons or property or invasion of other private rights, or any infringement of State or local law or regulations. (40 CFR 122.5(c))

F. Inspection and Entry

The Discharger shall allow the San Diego Water Board, State Water Board, United States Environmental Protection Agency (USEPA), and/or their authorized representatives (including an authorized contractor acting as their representative), upon the presentation of credentials and other documents, as may be required by law, to (40 CFR 122.41(i); CWC, § 13383):

1. Enter upon the Discharger's premises where a regulated facility or activity is located or conducted, or where records are kept under the conditions of this Order (40 CFR 122.41(i)(1));

2. Have access to and copy, at reasonable times, any records that must be kept under the conditions of this Order (40 CFR 122.41(i)(2));

3. Inspect and photograph, at reasonable times, any facilities, equipment (including monitoring and control equipment), practices, or operations regulated or required under this Order (40 CFR 122.41(i)(3)); and

4. Sample or monitor, at reasonable times, for the purposes of assuring Order compliance or as otherwise authorized by the CWA or the CWC, any substances or parameters at any location. (40 CFR 122.41(i)(4))

G. Bypass

1. Definitions

   a. "Bypass" means the intentional diversion of waste streams from any portion of a treatment facility. (40 CFR 122.41(m)(1)(i))

   b. "Severe property damage" means substantial physical damage to property, damage to the treatment facilities, which causes them to become inoperable, or substantial and permanent loss of natural resources that can reasonably be expected to occur in the absence of a bypass. Severe property damage does not mean economic loss caused by delays in production. (40 CFR 122.41(m)(1)(ii))

2. Bypass not exceeding limitations. The Discharger may allow any bypass to occur which does not cause exceedances of effluent limitations, but only if it is for essential maintenance to assure efficient operation. These bypasses are not subject to the provisions listed in Standard Provisions – Permit Compliance I.G.3, I.G.4, and I.G.5 below. (40 CFR 122.41(m)(2))

3. Prohibition of bypass. Bypass is prohibited, and the San Diego Water Board may take enforcement action against a Discharger for bypass, unless (40 CFR 122.41(m)(4)(i)):

a. Bypass was unavoidable to prevent loss of life, personal injury, or severe property damage (40 CFR 122.41(m)(4)(i)(A));

b. There were no feasible alternatives to the bypass, such as the use of auxiliary treatment facilities, retention of untreated wastes, or maintenance during normal periods of equipment downtime. This condition is not satisfied if adequate back-up equipment should have been installed in the exercise of reasonable engineering judgment to prevent a bypass that occurred during normal periods of equipment downtime or preventive maintenance (40 CFR 122.41(m)(4)(i)(B)); and

c. The Discharger submitted notice to the San Diego Water Board as required under Standard Provisions – Permit Compliance I.G.5 below. (40 CFR 122.41(m)(4)(i)(C))

4. The San Diego Water Board may approve an anticipated bypass, after considering its adverse effects, if the San Diego Water Board determines that it will meet the three conditions listed in Standard Provisions – Permit Compliance I.G.3 above. (40 CFR 122.41(m)(4)(ii))

5. Notice

a. Anticipated bypass. If the Discharger knows in advance of the need for a bypass, it shall submit a notice, if possible at least 10 days before the date of the bypass. (40 CFR 122.41(m)(3)(i))

b. Unanticipated bypass. The Discharger shall submit notice of an unanticipated bypass as required in Standard Provisions - Reporting V.E below (24-hour notice). (40 CFR 122.41(m)(3)(ii))

H. Upset

Upset means an exceptional incident in which there is unintentional and temporary noncompliance with technology based permit effluent limitations because of factors beyond the reasonable control of the Discharger. An upset does not include noncompliance to the extent caused by operational error, improperly designed treatment facilities, inadequate treatment facilities, lack of preventive maintenance, or careless or improper operation. (40 CFR 122.41(n)(1))

1. Effect of an upset. An upset constitutes an affirmative defense to an action brought for noncompliance with such technology based permit effluent limitations if the requirements of Standard Provisions – Permit Compliance I.H.2 below are met. No determination made during administrative review of claims that noncompliance was

caused by upset, and before an action for noncompliance, is final administrative action subject to judicial review. (40 CFR 122.41(n)(2))

2. Conditions necessary for a demonstration of upset. A Discharger who wishes to establish the affirmative defense of upset shall demonstrate, through properly signed, contemporaneous operating logs or other relevant evidence that (40 CFR 122.41(n)(3)):

a. An upset occurred and that the Discharger can identify the cause(s) of the upset (40 CFR 122.41(n)(3)(i));

b. The permitted facility was, at the time, being properly operated (40 CFR 122.41(n)(3)(ii));

c. The Discharger submitted notice of the upset as required in Standard Provisions – Reporting V.E.2.b below (24-hour notice) (40 CFR 122.41(n)(3)(iii)); and

d. The Discharger complied with any remedial measures required under Standard Provisions – Permit Compliance I.C above. (40 CFR 122.41(n)(3)(iv))

3. Burden of proof. In any enforcement proceeding, the Discharger seeking to establish the occurrence of an upset has the burden of proof. (40 CFR 122.41(n)(4))

II. STANDARD PROVISIONS – PERMIT ACTION

A. General

This Order may be modified, revoked and reissued, or terminated for cause. The filing of a request by the Discharger for modification, revocation and reissuance, or termination, or a notification of planned changes or anticipated noncompliance does not stay any Order condition. (40 CFR 122.41(f))

B. Duty to Reapply

If the Discharger wishes to continue an activity regulated by this Order after the expiration date of this Order, the Discharger must apply for and obtain a new permit. (40 CFR 122.41(b))

C. Transfers

This Order is not transferable to any person except after notice to the San Diego Water Board. The San Diego Water Board may require modification or revocation and reissuance of the Order to change the name of the Discharger and incorporate such other requirements as may be necessary under the CWA and the CWC. (40 CFR 122.41(l)(3); 122.61)

III. STANDARD PROVISIONS – MONITORING

A. Samples and measurements taken for the purpose of monitoring shall be representative of the monitored activity. (40 CFR 122.41(j)(1))

B. Monitoring results must be conducted according to test procedures under Part 136 or, in the case of sludge use or disposal, approved under 40 CFR Part 136 unless otherwise specified in 40 CFR Part 503 unless other test procedures have been specified in this Order. (40 CFR 122.41(j)(4); 122.44(i)(1)(iv))

IV. STANDARD PROVISIONS – RECORDS

A. Except for records of monitoring information required by this Order related to the Discharger's sewage sludge use and disposal activities, which shall be retained for a period of at least five years (or longer as required by 40 CFR Part 503), the Discharger shall retain records of all monitoring information, including all calibration and maintenance records and all original strip chart recordings for continuous monitoring instrumentation, copies of all reports required by this Order, and records of all data used to complete the application for this Order, for a period of at least three (3) years from the date of the sample, measurement, report or application. This period may be extended by request of the San Diego Water Board Executive Officer at any time. (40 CFR 122.41(j)(2))

B. Records of monitoring information shall include:

1. The date, exact place, and time of sampling or measurements (40 CFR 122.41(j)(3)(i));

2. The individual(s) who performed the sampling or measurements (40 CFR 122.41(j)(3)(ii));

3. The date(s) analyses were performed (40 CFR 122.41(j)(3)(iii));

4. The individual(s) who performed the analyses (40 CFR 122.41(j)(3)(iv));

5. The analytical techniques or methods used (40 CFR 122.41(j)(3)(v)); and

6. The results of such analyses. (40 CFR 122.41(j)(3)(vi))

C. Claims of confidentiality for the following information will be denied (40 CFR 122.7(b)):

1. The name and address of any permit applicant or Discharger (40 CFR 122.7(b)(1)); and

2. Permit applications and attachments, permits and effluent data. (40 CFR 122.7(b)(2))

V. STANDARD PROVISIONS – REPORTING

A. Duty to Provide Information

The Discharger shall furnish to the San Diego Water Board, State Water Board, or USEPA within a reasonable time, any information which the San Diego Water Board, State Water Board, or USEPA may request to determine whether cause exists for modifying, revoking and reissuing, or terminating this Order or to determine compliance with this Order. Upon request, the Discharger shall also furnish to the San Diego Water Board, State Water Board, or USEPA copies of records required to be kept by this Order. (40 CFR 122.41(h); CWC, § 13267)

B. Signatory and Certification Requirements

1. All applications, reports, or information submitted to the San Diego Water Board, State Water Board, and/or USEPA shall be signed and certified in accordance with Standard Provisions – Reporting V.B.2, V.B.3, V.B.4, and V.B.5 below. (40 CFR 122.41(k))

2. All permit applications shall be signed by either a principal executive officer or ranking elected official. For purposes of this provision, a principal executive officer of a federal agency includes: (i) the chief executive officer of the agency, or (ii) a senior executive officer having responsibility for the overall operations of a principal geographic unit of the agency (e.g., Regional Administrators of USEPA). (40 CFR 122.22(a)(3)).

3. All reports required by this Order and other information requested by the San Diego Water Board, State Water Board, or USEPA shall be signed by a person described in Standard Provisions – Reporting V.B.2 above, or by a duly authorized representative of that person. A person is a duly authorized representative only if:

a. The authorization is made in writing by a person described in Standard Provisions – Reporting V.B.2 above (40 CFR 122.22(b)(1));

b. The authorization specifies either an individual or a position having responsibility for the overall operation of the regulated facility or activity such as the position of plant manager, operator of a well or a well field, superintendent, position of equivalent responsibility, or an individual or position having overall responsibility for environmental matters for the company. (A duly authorized representative may thus be either a named individual or any individual occupying a named position.) (40 CFR 122.22(b)(2)); and

c. The written authorization is submitted to the San Diego Water Board and State Water Board. (40 CFR 122.22(b)(3))

4. If an authorization under Standard Provisions – Reporting V.B.3 above is no longer accurate because a different individual or position has responsibility for the overall operation of the facility, a new authorization satisfying the requirements of Standard

Provisions – Reporting V.B.3 above must be submitted to the San Diego Water Board and State Water Board prior to or together with any reports, information, or applications, to be signed by an authorized representative. (40 CFR 122.22(c))

5. Any person signing a document under Standard Provisions – Reporting V.B.2 or V.B.3 above shall make the following certification:

   "I certify under penalty of law that this document and all attachments were prepared under my direction or supervision in accordance with a system designed to assure that qualified personnel properly gather and evaluate the information submitted. Based on my inquiry of the person or persons who manage the system or those persons directly responsible for gathering the information, the information submitted is, to the best of my knowledge and belief, true, accurate, and complete. I am aware that there are significant penalties for submitting false information, including the possibility of fine and imprisonment for knowing violations." (40 CFR 122.22(d))

C. Monitoring Reports

1. Monitoring results shall be reported at the intervals specified in the Monitoring and Reporting Program (Attachment E of this Order). (40 CFR 122.22(l)(4))

2. Monitoring results must be reported on a Discharge Monitoring Report (DMR) form or forms provided or specified by the San Diego Water Board or State Water Board for reporting results of monitoring of sludge use or disposal practices. (40 CFR 122.41(l)(4)(i))

3. If the Discharger monitors any pollutant more frequently than required by this Order using test procedures approved under 40 CFR Part 136 or, in the case of sludge use or disposal, approved under 40 CFR Part 136 unless otherwise specified in 40 CFR Part 503, or as specified in this Order, the results of this monitoring shall be included in the calculation and reporting of the data submitted in the DMR or sludge reporting form specified by the San Diego Water Board. (40 CFR 122.41(l)(4)(ii))

4. Calculations for all limitations, which require averaging of measurements, shall utilize an arithmetic mean unless otherwise specified in this Order. (40 CFR 122.41(l)(4)(iii))

D. Compliance Schedules

Reports of compliance or noncompliance with, or any progress reports on, interim and final requirements contained in any compliance schedule of this Order, shall be submitted no later than 14 days following each schedule date. (40 CFR 122.41(l)(5))

E. Twenty Four-Hour Reporting

1. The Discharger shall report any noncompliance that may endanger health or the environment. Any information shall be provided orally within 24 hours from the time the Discharger becomes aware of the circumstances. A written submission shall

also be provided within five (5) days of the time the Discharger becomes aware of the circumstances. The written submission shall contain a description of the noncompliance and its cause; the period of noncompliance, including exact dates and times, and if the noncompliance has not been corrected, the anticipated time it is expected to continue; and steps taken or planned to reduce, eliminate, and prevent reoccurrence of the noncompliance. (40 CFR 122.41(l)(6)(i))

2. The following shall be included as information that must be reported within 24 hours under this paragraph (40 CFR 122.41(l)(6)(ii)):

a. Any unanticipated bypass that exceeds any effluent limitation in this Order. (40 CFR 122.41(l)(6)(ii)(A))

b. Any upset that exceeds any effluent limitation in this Order. (40 CFR 122.41(l)(6)(ii)(B))

3. The San Diego Water Board may waive the above-required written report under this provision on a case-by-case basis if an oral report has been received within 24 hours. (40 CFR 122.41(l)(6)(iii))

F. Planned Changes

The Discharger shall give notice to the San Diego Water Board as soon as possible of any planned physical alterations or additions to the permitted facility. Notice is required under this provision only when (40 CFR 122.41(l)(1)):

1. The alteration or addition to a permitted facility may meet one of the criteria for determining whether a facility is a new source in 40 CFR 122.29(b) (40 CFR 122.41(l)(1)(i)); or

2. The alteration or addition could significantly change the nature or increase the quantity of pollutants discharged. This notification applies to pollutants that are not subject to effluent limitations in this Order. (40 CFR 122.41(l)(1)(ii))

3. The alteration or addition results in a significant change in the Discharger's sludge use or disposal practices, and such alteration, addition, or change may justify the application of permit conditions that are different from or absent in the existing permit, including notification of additional use or disposal sites not reported during the permit application process or not reported pursuant to an approved land application plan. (40 CFR 122.41(l)(1)(iii))

G. Anticipated Noncompliance

The Discharger shall give advance notice to the San Diego Water Board or State Water Board of any planned changes in the permitted facility or activity that may result in noncompliance with General Order requirements. (40 CFR 122.41(l)(2))

H. Other Noncompliance

The Discharger shall report all instances of noncompliance not reported under Standard Provisions – Reporting V.C, V.D, and V.E above at the time monitoring reports are submitted. The reports shall contain the information listed in Standard Provision – Reporting V.E above. (40 CFR 122.41(l)(7))

I. Other Information

When the Discharger becomes aware that it failed to submit any relevant facts in a permit application, or submitted incorrect information in a permit application or in any report to the San Diego Water Board, State Water Board, or USEPA, the Discharger shall promptly submit such facts or information. (40 CFR 122.41(l)(8))

VI. STANDARD PROVISIONS – ENFORCEMENT

A. The San Diego Water Board is authorized to enforce the terms of this permit under several provisions of the CWC, including, but not limited to, sections 13385, 13386, and 13387

VII. ADDITIONAL PROVISIONS – NOTIFICATION LEVELS

A. Non-Municipal Facilities

Existing manufacturing, commercial, mining, and silvicultural Dischargers shall notify the San Diego Water Board as soon as they know or have reason to believe [40 CFR 122.42(a)]:

1. That any activity has occurred or will occur that would result in the discharge, on a routine or frequent basis, of any toxic pollutant that is not limited in this Order, if that discharge will exceed the highest of the following "notification levels" [40 CFR 122.42(a)(l)]:

a. 100 micrograms per liter (µg/L)[40 CFR 122.42(a)(l)(i)];

b. 200 µg/L for acrolein and acrylonitrile; 500 µg/L for 2,4 dinitrophenol and 2-methyl-4,6 dinitrophenol; and 1 milligram per liter (mg/L) for antimony [40 CFR 122.42(a)(l)(ii)];

c. Five (5) times the maximum concentration value reported for that pollutant in the Report of waste Discharge [40 CFR 122.42(a)(l)(iii)]; or

d. The level established by the San Diego Water Board in accordance with 40 CFR 122.44(f) [40 CFR 122.42(a)(l)(iv)].

2. That any activity has occurred or will occur that would result in the discharge, on a non-routine or infrequent basis, of any toxic pollutant that is not limited in this Order, if that discharge will exceed the highest of the following "notification levels" [40 CFR 122.42(a)(2)]:

a. 500 micrograms per liter (µg/L) [40 CFR 122.42(a)(2)(i)];

b. 1 milligram per liter (mg/L) for antimony [40 CFR 122.42(a)(2)(ii)];

c. Ten (10) times the maximum concentration value reported for that pollutant in the Report of Waste Discharge [40 CFR 122.42(a)(2)(iii)]; or

d. The level established by the San Diego Water Board in accordance with 40 CFR 122.44(f) [40 CFR 122.42(a)(2)(iv)].

B. Publicly-Owned Treatment Works (POTWs)

All POTWs shall provide adequate notice to the San Diego Water Board of the following (40 CFR 122.42(b)):

1. Any new introduction of pollutants into the POTW from an indirect discharger that would be subject to sections 301 or 306 of the CWA if it were directly discharging those pollutants (40 CFR 122.42(b)(1)); and

2. Any substantial change in the volume or character of pollutants being introduced into that POTW by a source introducing pollutants into the POTW at the time of adoption of the Order. (40 CFR 122.42(b)(2))

3. Adequate notice shall include information on the quality and quantity of effluent introduced into the POTW as well as any anticipated impact of the change on the quantity or quality of effluent to be discharged from the POTW. (40 CFR 122.42(b)(3)).

ATTACHMENT E – MONITORING AND REPORTING PROGRAM

Table of Contents

I. General Monitoring Provisions ..... E-2~~E-3~~
II. Monitoring Locations ..... E-3~~E-4~~
III. Influent Monitoring Requirements ..... E-4~~E-5~~
A. Monitoring Location INF-001 and INF-002 ..... E-4~~E-5~~
IV. Effluent Monitoring Requirements ..... E-5~~E-6~~
A. Monitoring Location M-001, M-002, M-003, M-004, and M-005 ..... E-5~~E-6~~
V. Whole Effluent Toxicity Testing Requirements ..... E-10~~E-11~~
VI. Land Discharge Monitoring Requirements – Not Applicable ..... E-12~~E-13~~
VII. Reclamation Monitoring Requirements – Not Applicable ..... E-12~~E-13~~
VIII. Receiving Water Monitoring Requirements – Surface Water ..... E-12~~E-13~~
A. Surf Zone Water Quality Monitoring ..... E-12~~E-13~~
B. Near Shore Water Quality Monitoring ..... E-13~~E-14~~
C. Off Shore Water Quality Monitoring ..... E-14~~E-15~~
D. Benthic Monitoring ..... E-15~~E-16~~
E. Additional Biological Monitoring – Demersal Fish and Macroinvertebrates ..... E-16~~E-17~~
IX. Other Monitoring Requirements ..... E-17~~E-18~~
A. Kelp Bed Canopy ..... E-17~~E-18~~
B. Regional Monitoring ..... E-17~~E-18~~
C. Solids Monitoring ..... E-18~~E-19~~
X. Reporting Requirements ..... E-18~~E-19~~
A. General Monitoring and Reporting Requirements ..... E-18~~E-19~~
B. Self Monitoring Reports (SMRs) ..... E-19~~E-20~~
C. Discharge Monitoring Reports (DMRs) ..... E-22~~E-23~~
D. Other Reports ..... E-22~~E-23~~

List of Tables

Table E-1. Monitoring Station Locations ..... E-3~~E-4~~
Table E-2. Influent Monitoring (SLRWRF and LSWTP) ..... E-4~~E-5~~
Table E-3. Effluent Monitoring at M-001 & M-002 (SLRWRF and LSWTP) ..... E-5~~E-6~~
Table E-4. Effluent Monitoring at M-003 (MBDF) ..... E-5~~E-6~~
Table E-5. Combined Effluent Monitoring at M-004 ..... E-6~~E-7~~
Table E-6. Effluent Monitoring at M-005 ..... E-10~~E-11~~
Table E-7. Whole Effluent Toxicity Testing ..... E-10~~E-11~~
Table E-8. Approved Test for Chronic Toxicity ..... E-11~~E-12~~
Table E-9. Near Shore Water Quality Reduced Monitoring Requirements ..... E-13~~E-14~~
Table E-10. Near Shore Water Quality Intensive Monitoring Requirements ..... E-14~~E-15~~
Table E-11. Off Shore Water Quality Reduced Monitoring Requirements ..... E-14~~E-15~~
Table E-12. Off Shore Water Quality Intensive Monitoring Requirements ..... E-15~~E-16~~
Table E-13. Sediment Monitoring Requirements ..... E-15~~E-16~~
Table E-14. Infauna Monitoring Requirements ..... E-16~~E-17~~
Table E-15. Demersal Fish and Macroinvertebrates Monitoring Requirements ..... E-16~~E-17~~
Table E-16. Monitoring Periods and Reporting Schedule ..... E-19~~E-20~~

Attachment E – Monitoring and Reporting Program (MRP)
Regulations at section 122.48, title 40 of the Code of Federal Regulations (40 CFR 122.48) require that all National Pollutant Discharge Elimination System (NPDES) permits specify monitoring and reporting requirements. California Water Code (CWC) sections 13267 and 13383 also authorize the California Regional Water Quality Control Board (San Diego Water Board) to require technical and monitoring reports. This MRP establishes monitoring and reporting requirements, which implement the federal and State regulations.

I. GENERAL MONITORING PROVISIONS

A. Samples and measurements taken as required herein shall be representative of the volume and nature of the monitoring discharge. All samples shall be taken at the monitoring locations specified below and, unless otherwise specified, before the monitored flow joins or is diluted by any other waste stream, body of water, or substance. Monitoring locations shall not be changed without notification to and the approval of the San Diego Water Board. Samples shall be collected at times representative of "worst case" conditions with respect to compliance with the requirement of this Order.

B. Appropriate flow measurement devices and methods consistent with accepted scientific practices shall be selected and used to ensure the accuracy and reliability of measurements of the volume of monitored discharges. The devices shall be installed, calibrated and maintained to ensure that the accuracy of the measurement is consistent with the accepted capability of that type of device. Devices selected shall be capable of measuring flows with a maximum deviation of less than ±5 percent from true discharge rates throughout the range of expected discharge volumes.

C. Monitoring must be conducted according to United States Environmental Protection Agency (USEPA) test procedures approved at 40 CFR Part 136, *Guidelines Establishing Test Procedures for the Analysis of Pollutants Under the Clean Water Act* as amended, or unless other test procedures are specified in this Order and/or in this MRP and/or by the San Diego Water Board.

D. All analyses shall be performed in a laboratory certified to perform such analyses by the California Department of Public Health (DPH) or a laboratory approved by the San Diego Water Board.

E. Records of monitoring information shall include information required under Standard Provision, Attachment D of this Order, section IV.

F. All monitoring instruments and devices used by the Discharger to fulfill the prescribed monitoring program shall be properly maintained and calibrated as necessary to ensure their continued accuracy. All flow measurement devices shall be calibrated at least once per year, or more frequently, to ensure continued accuracy of the devices.

G. The Discharger shall have, and implement, an acceptable written quality assurance (QA) plan for laboratory analyses. Duplicate chemical analyses must be conducted on a minimum of 10 percent of the samples or at least one sample per month, whichever is

greater. A similar frequency shall be maintained for analyzing spiked samples. When requested by USEPA or the San Diego Water Board, the Discharger will participate in the NPDES discharge monitoring report QA performance study. The Discharger should have a success rate equal or greater than 80 percent.

H. Analysis for toxic pollutants, including chronic toxicity, with performance goals based on water quality objectives of the 2005 California Ocean Plan (hereinafter Ocean Plan) shall be conducted in accordance with procedures described in the Ocean Plan and restated in this MRP.

I. This permit may be modified in accordance with the requirements set forth at 40 CFR Parts 122 and 124, to include appropriate conditions or limits to address demonstrated effluent toxicity based on newly available information, or to implement any USEPA approved, new, State water quality standards applicable to effluent toxicity.

II. MONITORING LOCATIONS

The Discharger shall establish the following monitoring locations to demonstrate compliance with the effluent limitations, discharge specifications, and other requirements in this Order:

Table E-1. Monitoring Station Locations

Discharge Point Name	Monitoring Location Name	Monitoring Location Description
--	INF-001	At a location where all influent flows to San Luis Rey Water Reclamation Facility (SLRWRF) are accounted for in monitoring events; upstream of any in-plant return flows; and where representative samples of influent can be collected.
--	INF-002	At a location where all influent flows to La Salina Wastewater Treatment Plant (LSWTP) are accounted for in monitoring events; upstream of any in-plant return flows; and where representative samples of influent can be collected.
--	M-001	Downstream of any in-plant return flows at SLRWRF where representative samples of effluent treated solely at SLRWRF can be collected.
--	M-002	Downstream of any in-plant return flows at LSWTP where representative samples of effluent treated solely at LSWTP can be collected.
--	M-003	At a location where a representative sample of reverse osmosis brine can be obtained from Mission Bay Groundwater Purification Facility (MBDF), prior to commingling with other wastewaters.
001	M-004	At a location where representative samples of commingled effluent from SLRWRF, LSWTP, MBDF and Genentech can be collected before combining with wastewaters from Fallbrook Public Utility District and US Marine Corp Base Camp Pendleton.
001	M-005	At a location downstream of all wastewaters discharged to the Oceanside Ocean Outfall (OOO) can be obtained or accounted for. Alternatively, the monitoring requirements at M-005 may be achieved using the sum of flow monitoring devices that account for all contributing flows to the OOO.
SURF ZONE STATONS		
--	S1	Surf zone, 5,500 feet south of the outfall.
--	S2	Surf zone, 2,500 feet south of the outfall.
--	S3	Surf zone; at the outfall

Discharge Point Name	Monitoring Location Name	Monitoring Location Description
--	S4	Surf zone, 2,000 feet north of the outfall.
--	S5	Surf zone, 5,800 feet north of the outfall.
--	S6	To be determined at a later date
--	S7	To be determined at a later date.
NEAR SHORE STATIONS		
--	N1	Opposite S1, at the 30 foot depth contour, MLLW.
--	N2	Opposite S2, at the 30 foot depth contour, MLLW.
--	N3	Opposite S3, at the 30 foot depth contour, MLLW.
--	N4	Opposite S4, at the 30 foot depth contour, MLLW.
--	N5	Opposite S5, at the 30 foot depth contour, MLLW.
--	N6	To be determined at a later date.
--	N7	To be determined at a later date.
OFFSHORE STATIONS		
--	A1-A4	At the corners of a 1,000 ft x 1,000 ft square having one side parallel to shore and the intersection of its diagonals at the seaward end of the outfall.
--	A5	At the seaward end of the outfall.
--	B1	One mile downcoast from the outfall, and over the same depth contour as Station A5.
--	B2	One mile upcoast from the outfall and over the same depth contour as Station A5.
BIOLOGICAL TRANSECTS		
--	T0	At the 20, 40, 60, and 80 foot depth contours along the transect located 50 feet downcoast of and parallel to the outfall.
--	T1	At the 20, 40, 60, and 80 foot depth contours along the transect located 1 mile downcoast of and parallel to the outfall.
--	T2	At the 20, 40, 60, and 80 foot depth contours along the transect located 1.5 miles downcoast of and parallel to the outfall.

III. INFLUENT MONITORING REQUIREMENTS

A. Monitoring Location INF-001 and INF-002

1. The Discharger shall monitor the influent at INF-001 and INF-002, respectively, as follows.

Table E-2. Influent Monitoring (SLRWRF and LSWTP)

Parameter	Units	Sample Type	Minimum Sampling Frequency	Required Analytical Test Method
Flow	MGD	Recorder/Totalizer	Continuous	--
Carbonaceous Biochemical Oxygen Demand (5-day @ 20°C) ($CBOD_5$)	mg/L	24-hr Composite	1/Week	[1]
Total Suspended Solids (TSS)	mg/L	24-hr Composite	1/Week	[1]

[1] As required under 40 CFR Part 136.

IV. EFFLUENT MONITORING REQUIREMENTS

A. Monitoring Location M-001, M-002, M-003, M-004, and M-005

1. The Discharger shall monitor the effluent at M-001 and M-002 as follows.

Table E-3. Effluent Monitoring at M-001 & M-002 (SLRWRF and LSWTP)

Parameter	Units	Sample Type	Minimum Sampling Frequency	Required Analytical Test Method
Flow	MGD	Recorder/Totalizer	Continuous	--
TSS	mg/L	24-hr Composite	1/Day[2]	[1,3,4]
Biochemical Oxygen Demand (5-day @ 20°C)	mg/L	24-hr Composite	1/Month	[1,3]
$CBOD_5$	mg/L	24-hr composite	1/Day[2]	[1,3,4]
Oil and Grease	mg/L	Grab	1/Month[5]	[1,3]
Settleable Solids	mL/L	Grab	1/Day[2]	[1]
Turbidity	NTU	24-hr Composite	1/Week[5]	[1]
pH	pH Units	Grab	1/Day[2]	[1]

[1] As required under 40 CFR Part 136.
[2] Applies 5 days per week, except 7 days per week for at least 1 week in July or August of each year.
[3] The Discharger shall calculate and report the mass emission rate (MER) of the constituent for each sample taken. The MER shall be calculated in accordance with section VII.I.2.d of this Order.
[4] The Discharger shall calculate the monthly average percent removal for these constituents.
[5] The minimum frequency of monitoring for this constituent is automatically increased to twice the minimum frequency specified, if any analysis for this constituent yields a result higher than the applicable effluent limitation or performance goal specified in this Order. The increased minimum frequency of monitoring shall remain in effect until the results of a minimum of four consecutive analyses for this constituent are below all applicable effluent limitations or performance goals specified in this Order.

2. The Discharger shall monitoring the effluent from M-003 as follows:[1]

Table E-4. Effluent Monitoring at M-003 (MBDF)

Parameter	Units	Sample Type	Minimum Sampling Frequency	Required Analytical Test Method
Flow	MGD	Recorder/Totalizer	Continuous	--
TSS	mg/L	24-hr Composite	1/Day[2]	[1]
Oil and Grease	mg/L	Grab	1/Month[4]	[1,3]
Settleable Solids	mL/L	Grab	1/Day[2]	[1]
Turbidity	NTU	Continuous turbidimeter ~~24-hr Composite~~	Continuous[5] ~~1/Week[4]~~	[1]
pH	pH Units	Grab	1/Day	[1]

[1] As required under 40 CFR Part 136.

[1] Attachment E, Section IV.A.2 modified by Order No. R9-2012-0042, Directive 2

[2] Applies 5 days per week, except 7 days per week for at least 1 week in July or August of each year.
[3] The Discharger shall calculate and report the mass emission rate (MER) of the constituent for each sample taken. The MER shall be calculated in accordance with section VII.I.2.d of this Order.
[4] The minimum frequency of monitoring for this constituent is automatically increased to twice the minimum frequency specified, if any analysis for this constituent yields a result higher than the applicable effluent limitation or performance goal specified in this Order. The increased minimum frequency of monitoring shall remain in effect until the results of a minimum of four consecutive analyses for this constituent are below all applicable effluent limitations or performance goals specified in this Order.
[45] Daily grab samples of MBDF effluent at Monitoring Station M-003 may be utilized in the event of malfunction of the continuous turbidimeter.

3. The Discharger shall monitor the effluent from M-004 (Discharge Point No. 001) as follows.

Table E-5. Combined Effluent Monitoring at M-004

Parameter	Units	Sample Type	Minimum Sampling Frequency	Required Analytical Test Method
Flow	MGD	Recorder/Totalizer	Continuous	--
Temperature	°F	Grab	1/Week	[1]
Dissolved Oxygen	mg/L	Grab	1/Week	[1]
TABLE B PARAMETERS FOR PROTECTION OF MARINE AQUATIC LIFE				
Arsenic, Total Recoverable	µg/L	24-hr Composite	2/Year [3,4]	[1]
Cadmium, Total Recoverable	µg/L	24-hr Composite	2/Year [3,4]	[1]
Chromium (VI), Total Recoverable[5]	µg/L	24-hr Composite	2/Year [3,4]	[1]
Copper, Total Recoverable	µg/L	24-hr Composite	2/Year [3,4]	[1]
Lead, Total Recoverable	µg/L	24-hr Composite	2/Year [3,4]	[1]
Mercury, Total Recoverable	µg/L	24-hr Composite	2/Year [3,4]	[1]
Nickel, Total Recoverable	µg/L	24-hr Composite	2/Year [3,4]	[1]
Selenium, Total Recoverable	µg/L	24-hr Composite	2/Year [3,4]	[1]
Silver, Total Recoverable	µg/L	24-hr Composite	2/Year [3,4]	[1]
Zinc, Total Recoverable	µg/L	24-hr Composite	2/Year [3,4]	[1]
Cyanide, Total Recoverable	µg/L	24-hr Composite	2/Year [3,4]	[1,6]
Chlorine, Total Residual	µg/L	Grab	1/Day[3,7]	[1]
Ammonia Nitrogen, Total (as N)	mg/L	24-hr Composite	1/Month[3,4]	[1]
Phenolic Compounds (nonchlorinated)[8]	µg/L	24-hr Composite	2/Year [3,4]	[1]
Phenolic Compounds (chlorinated)[9]	µg/L	24-hr Composite	2/Year [3,4]	[1]
Endosulfan[10]	µg/L	24-hr Composite	2/Year [3,4]	[1]
Endrin	µg/L	Grab	2/Year [3,4]	[1]
HCH[11]	µg/L	Grab	2/Year [3,4]	[1]
Radioactivity	pCi/L	Grab	2/Year [3,4]	[1]
TABLE B PARAMETERS FOR PROTECTION OF HUMAN HEALTH – NONCARCINOGENS				
Acrolein	µg/L	Grab	2/Year[3,4]	[1]
Antimony, Total Recoverable	µg/L	24-hr Composite	2/Year[3,4]	[1]
Bis (2-chloroethoxy) Methane	µg/L	Grab	2/Year[3,4]	[1]
Bis (2-chloroisopropyl) Ether	µg/L	Grab	2/Year[3,4]	[1]

Parameter	Units	Sample Type	Minimum Sampling Frequency	Required Analytical Test Method
Chlorobenzene	µg/L	Grab	2/Year[3,4]	[1]
Chromium (III), Total Recoverable	µg/L	24-hr Composite	2/Year[3,4]	[1]
Di-n-butyl Phthalate	µg/L	Grab	2/Year[3,4]	[1]
Dichlorobenzenes[12]	µg/L	Grab	2/Year[3,4]	[1]
Diethyl Phthalate	µg/L	Grab	2/Year[3,4]	[1]
Dimethyl Phthalate	µg/L	Grab	2/Year[3,4]	[1]
4,6-dinitro-2-methylphenol	µg/L	Grab	2/Year[3,4]	[1]
2,4-dinitrophenol	µg/L	Grab	2/Year[3,4]	[1]
Ethylbenzene	µg/L	Grab	2/Year[3,4]	[1]
Fluoranthene	µg/L	Grab	2/Year[3,4]	[1]
Hexachlorocyclopentadiene	µg/L	Grab	2/Year[3,4]	[1]
Nitrobenzene	µg/L	Grab	2/Year[3,4]	[1]
Thallium, Total Recoverable	µg/L	24-hr Composite	2/Year[3,4]	[1]
Toluene	µg/L	Grab	2/Year[3,4]	[1]
Tributyltin	µg/L	24-hr Composite	1/Quarter[3,4]	[1]
1,1,1-trichloroethane	µg/L	Grab	2/Year[3,4]	[1]
TABLE B PARAMETERS FOR PROTECTION OF HUMAN HEALTH – CARCINOGENS				
Acrylonitrile	µg/L	Grab	2/Year[3,4]	[1]
Aldrin	µg/L	Grab	2/Year[3,4]	[1]
Benzene	µg/L	Grab	2/Year[3,4]	[1]
Benzidine	µg/L	Grab	2/Year[3,4]	[1]
Beryllium, Total Recoverable	µg/L	24-hr composite	2/Year[3,4]	[1]
Bis (2-chloroethyl) Ether	µg/L	Grab	2/Year[3,4]	[1]
Bis (2-ethlyhexyl) Phthalate	µg/L	Grab	2/Year[3,4]	[1]
Carbon Tetrachloride	µg/L	Grab	2/Year[3,4]	[1]
Chlordane	µg/L	Grab	2/Year[3,4]	[1]
Chlorodibromomethane	µg/L	Grab	2/Year[3,4]	[1]
Chloroform	µg/L	Grab	2/Year[3,4]	[1]
DDT[13]	µg/L	Grab	2/Year[3,4]	[1]
1,4-dichlorobenzene	µg/L	Grab	2/Year[3,4]	[1]
3,3'-dichlorobenzidine	µg/L	Grab	2/Year[3,4]	[1]
1,2-dichloroethane	µg/L	Grab	2/Year[3,4]	[1]
1,1-dichloroethylene	µg/L	Grab	2/Year[3,4]	[1]
Dichlorobromomethane	µg/L	Grab	2/Year[3,4]	[1]
Dichloromethane	µg/L	Grab	2/Year[3,4]	[1]
1,3-dichloropropene	µg/L	Grab	2/Year[3,4]	[1]
Dieldrin	µg/L	Grab	2/Year[3,4]	[1]
2,4-dinitrotoluene	µg/L	Grab	2/Year[3,4]	[1]
1,2-diphenylhydrazine	µg/L	Grab	2/Year[3,4]	[1]
Halomethanes[14]	µg/L	Grab	2/Year[3,4]	[1]
Heptachlor	µg/L	Grab	2/Year[3,4]	[1]
Heptachlor Epoxide	µg/L	Grab	2/Year[3,4]	[1]
Hexachlorobenzene	µg/L	Grab	2/Year[3,4]	[1]

Parameter	Units	Sample Type	Minimum Sampling Frequency	Required Analytical Test Method
Hexachlorobutadiene	µg/L	Grab	2/Year[3,4]	[1]
Hexachloroethane	µg/L	Grab	2/Year[3,4]	[1]
Isophorone	µg/L	Grab	2/Year[3,4]	[1]
N-nitrosodimethylamine	µg/L	Grab	2/Year[3,4]	[1]
N-nitrosodi-N-propylamine	µg/L	Grab	2/Year[3,4]	[1]
N-nitrosodiphenylamine	µg/L	Grab	2/Year[3,4]	[1]
PAHs[15]	µg/L	Grab	2/Year[3,4]	[1]
PCBs[16]	µg/L	Grab	2/Year[3,4]	[1]
TCDD equivalents[17]	µg/L	Grab	1/Quarter[3,4]	[1]
1,1,2,2-tetrachloroethane	µg/L	Grab	2/Year[3,4]	[1]
Tetrachloroethylene	µg/L	Grab	2/Year[3,4]	[1]
Toxaphene	µg/L	Grab	2/Year[3,4]	[1]
Trichloroethylene	µg/L	Grab	2/Year[3,4]	[1]
1,1,2-trichloroethane	µg/L	Grab	2/Year[3,4]	[1]
2,4,6-trichlorophenol	µg/L	Grab	2/Year[3,4]	[1]
Vinyl Chloride	µg/L	Grab	2/Year[3,4]	[1]

Parameter	Units	Sample Type	Minimum Sampling Frequency	Required Analytical Test Method

[1] As required under 40 CFR Part 136.
[2] Applies 5 days per week, except 7 days per week for at least 1 week in July or August of each year.
[3] The Discharger shall calculate and report the mass emission rate (MER) of the constituent for each sample taken. The MER shall be calculated in accordance with section VII.I.2.d of this Order.
[4] The minimum frequency of monitoring for this constituent is automatically increased to twice the minimum frequency specified, if any analysis for this constituent yields a result higher than the applicable effluent limitation or performance goal specified in this Order. The increased minimum frequency of monitoring shall remain in effect until the results of a minimum of four consecutive analyses for this constituent are below all applicable effluent limitations or performance goals specified in this Order.
[5] Dischargers may, at their option, apply this performance goal as a total chromium performance goal.
[6] If a Discharger can demonstrate to the satisfaction of the San Diego Water Board (subject to USEPA approval) that an analytical method is available to reliably distinguish between strongly and weakly complexed cyanide, performance goals for cyanide may be met by the combined measurement of free cyanide, simple alkali metals cyanides, and weakly complexed organometallic cyanide complexes. In order for the analytical method to be acceptable, the recovery of free cyanide from metal complexes must be comparable to that achieved by the approved method in 40 CFR Part 136, as revised May 14, 1999.
[7] Monitoring of total chlorine residual is not required on days when none of the treatment units that are subject to this Order use chlorine for disinfection. If only one sample is collected for total chlorine residual analysis on a particular day, that sample must be collected at the time when the concentration of total chlorine residual in the discharge would be expected to be greatest. The times of chlorine discharges on the days that samples are collected, and the time at which samples are collected, shall be reported.
[8] Non-chlorinated phenolic compounds represent the sum of 2,4-dimethylphenol, 4,6-Dinitro-2-methylphenol, 2,4-dinitrophenol, 2-methylphenol, 4-methylphenol, 2-Nitrophenol, 4-nitrophenol, and phenol.
[9] Chlorinated phenolic compounds represent the sum of 4-chloro-3-methylphenol, 2-chlorophenol, pentachlorophenol, 2,4,5-trichlorophenol, and 2,4,6-trichlorophenol.
[10] Endosulfan represents the sum of alpha-endosulfan, beta-endosulfan, and endosulfan sulfate.
[11] HCH (hexachlorocyclohexane) represents the sum of the alpha, beta, gamma (Lindane), and delta isomers of hexachlorocyclohexane.
[12] Dichlorobenzenes represent the sum of 1,2- and 1,3-dichlorobenzene.
[13] DDT represents the sum of 4,4'DDT; 2,4'DDT; 4,4'DDE; 2,4'DDE; 4,4'DDD; and 2,4'DDD.
[14] Halomethanes represent the sum of bromoform, bromomethane (methyl bromide), and chloromethane (methyl chloride).
[15] PAHs (polynuclear aromatic hydrocarbons) represent the sum of acenapthalene; anthracene; 1,2-benzanthracene; 3,4-benzofluoranthene; benzo[k]fluoranthene; 1,12-benzoperylene; benzo[a]pyrene; chrysene; dibenzo[a,h]anthracene; fluorene; indeno[1,2,3-cd]pyrene; phenanthrene; and pyrene.
[16] PCBs (polychlorinated biphenyls) represent the sum of chlorinated biphenyls whose analytical characteristics resemble those of Aroclor-1016, Aroclor-1221, Aroclor-1232, Aroclor-1242, Aroclor-1248, Arolclor-1254, and Arcolor-1260.
[17] TCDD equivalents represent the sum of concentrations of chlorinated dibenzodioxins (2,3,7,8-CDDs) and chlorinated dibenzofurans (2,3,7,8-CDFs) multiplied by their respective toxicity factors, as shown by the table below. USEPA Method 8280 may be used to analyze TCDD equivalents.

Isomer Group	Toxicity Equivalence Factor
2,3,7,8 – tetra CDD	1.0
2,3,7,8 – penta CDD	0.5
2,3,7,8 – hexa CDD	0.1
2,3,7,8 – hepta CDD	0.01
octa CDD	0.001
2,3,7,8 – tetra CDF	0.1
1,2,3,7,8 – penta CDF	0.05
2,3,4,7,8 – penta CDF	0.5
2,3,7,8 – hexa CDFs	0.1
2,3,7,8 – hepta CDFs	0.01
Octa CDF	0.001

4. The Discharger shall monitor the effluent at M-005 as follows.

Table E-6. Effluent Monitoring at M-005

Parameter	Units	Sample Type	Minimum Sampling Frequency	Required Analytical Test Method
Flow	MGD	Recorder/Totalizer[1]	Continuous	--

[1] Total flow for M-005 may be determined either by a single meter, or by the sum of numerous meters that account for all wastewaters discharged to the OOO (discharge from SLRWRF, LSWTP, MBDF, Genentech, Fallbrook Public Utility District, and US Marine Corp Base Camp Pendleton).

V. WHOLE EFFLUENT TOXICITY TESTING REQUIREMENTS

The Discharger shall conduct chronic toxicity testing on effluent samples collected at Effluent Monitoring Station M-004 in accordance with the following schedule and requirements:

Table E-7. Whole Effluent Toxicity Testing

Test	Unit	Sample Type	Minimum Test Frequency
Screening period for chronic toxicity	TU_c	24-hr Composite	Every other year for 3 consecutive months, beginning with the calendar year 2011
Chronic Toxicity	TU_c	24-hr Composite	2/Year

Marine Organisms, 5th Edition, October 2002 (EPA-821-R-02-012).

Critical life stage toxicity tests shall be performed to measure chronic toxicity. Testing shall be performed using methods outlined in *Short-Term Methods for Estimating the Chronic Toxicity of Effluent and Receiving Waters to West Coast Marine Estuarine Organisms (*Chapman, G.A., D.L. Denton, and J.M. Lazorchak, 1995) or *Procedures Manual for Conducting Toxicity Tests Developed by the Marine Bioassay Project* (State Water Board, 1996).

A screening period for chronic toxicity shall be conducted every other year beginning with the calendar year 2011. Each screening period shall consist of 3 consecutive months of WET tests, , using a minimum of three test species with approved test protocols, from the following list (from the Ocean Plan). Repeat screening periods may be terminated after the first month if the most sensitive species is the same as the species previously found to be most sensitive. Other tests may be used, if they have been approved for such testing by the State Water Board. The test species shall include a fish, an invertebrate, and an aquatic plant. After the screening period, the most sensitive test species shall be used for the quarterly testing. Control and dilution water should be receiving water or lab water as appropriate. If the dilution water is different from the culture water, then culture water should be used in a second control. The sensitivity of the test organisms to a reference toxicant shall be determined concurrently with each bioassay test and reported with test results.

Table E-8. Approved Test for Chronic Toxicity

Species	Test	Tier [1]	Reference [2]
giant kelp, *Macrocystis pyrifera*	percent germination; germ tube length	1	a, c
red abalone, *Haliotis rufescens*	abnormal shell development	1	a, c
oyster, *Crassostrea gigas*; mussels, *Mytilus spp.*	abnormal shell development; percent survival	1	a, c
urchin, *Strongylocentrotus purpuratus*; sand dollar, *Dendraster excentricus*	percent normal development	1	a, c
urchin, *Strongylocentrotus purpuratus*; sand dollar, *Dendraster excentricus*	percent fertilization	1	a, c
shrimp, *Homesimysis costata*	percent survival; growth	1	a, c
shrimp, *Mysidopsis bahia*	percent survival; fecundity	2	b, d
topsmelt, *Atherinops affinis*	larval growth rate; percent survival	1	a, c
Silversides, *Menidia beryllina*	larval growth rate; percent survival	2	b, d

[1] First tier methods are preferred for compliance monitoring. If first tier organisms are not available, the Discharger can use a second tier test method following approval by the San Diego Water Board.

[2] Protocol References:

a. Chapman, G.A., D.L. Denton, and J.M. Lazorchak. 1995. Short-term Methods for Estimating the Chronic Toxicity of Effluents and Receiving Waters to West Coast Marine and Estuarine Organisms. USEPA Report No. EPA/600/R-95/136.

b. Klemm, D.J., G.E. Morrison, T.J. Norberg-King, W.J. Peltier, and M.A. Heber. 1994. Short-term Methods for Estimating the Chronic Toxicity of Effluents and Receiving Water to Marine and Estuarine Organisms. USEPA Report No. EPA-600-4-91-003.

c. SWRCB 1996. Procedures Manual for Conducting Toxicity Tests Developed by the Marine Bioassay Project. 96-1WQ.

d. Weber, C.I., W.B. Horning, I.I., D.J. Klemm, T.W. Nieheisel, P.A. Lewis, E.L. Robinson, J. Menkedick and F. Kessler 9eds). 1998. Short-term Methods for Estimating the Chronic Toxicity of Effluents and Receiving Waters to Marine and Estuarine Organisms. EPA/600/4-87/028. National Information Service, Springfield, VA.

If the performance goal for chronic toxicity is exceeded in any one test, then within 15 days of the exceedance, the Discharger shall begin conducting six additional tests, bi-weekly, over a 12 week period. If the toxicity effluent limitation is exceeded in any of these six additional tests, then the Discharger shall notify the Executive Officer. If the Executive Officer determines that the discharge consistently exceeds a toxicity performance goal, then the Discharger shall initiate a TRE/TIE in accordance with the TRE workplan, Toxicity Reduction Evaluation Guidance for Municipal Wastewater Treatment Plants (USEPA 833-B-99-002, 1999), and USEPA TIE guidance documents (Phase I, EPA/600/6-91/005F, 1992; Phase II, EPA/600/R-92/080, 1993; and Phase III, EPA/600/R-92/081, 1993). Once the source of toxicity is identified, the Discharger shall take all reasonable steps to reduce the toxicity to meet the chronic toxicity performance goal identified in section IV.A.2 of this Order.

Within 30 days of completion of the TRE/TIE, the Discharger shall submit the results of the TRE/TIE, including a summary of the findings, data generated, a list of corrective actions necessary to achieve consistent compliance with all the toxicity limitations/performance goals of this Order and prevent recurrence of exceedances of those

limitations/performance goals, and a time schedule for implementation of such corrective actions. The corrective actions and time schedule shall be modified at the direction of the Executive Officer.

If no toxicity is detected in any of these additional six tests, then the Discharger may return to the testing frequency specified in the MRP.

VI. LAND DISCHARGE MONITORING REQUIREMENTS – NOT APPLICABLE

VII. RECLAMATION MONITORING REQUIREMENTS – NOT APPLICABLE

VIII. RECEIVING WATER MONITORING REQUIREMENTS – SURFACE WATER

The receiving water monitoring program required herein is also required by San Diego Water Board Order No. R9-2011-0016, which establishes limitation and conditions for discharges from the City of Oceanside's Facilities. The Discharger may conduct the required receiving water monitoring together with the Fallbrook Public Utility District, US Marine Corps Base Camp Pendleton, and Genentech, as these entities discharge through the OOO.

Receiving water and sediment monitoring in the vicinity of the OOO shall be conducted as specified below. Station location, sampling, sampling preservation and analyses, when not specified, shall be by methods approved by the Executive Officer. The monitoring program may be modified by the Executive Officer at any time.

The receiving water and sediment monitoring program for the OOO may be conducted jointly with other dischargers to the OOO.

During monitoring events, if possible, sample stations shall be located using a land-based microwave positioning system or a satellite positioning system such as GPS. If an alternate navigation system is proposed, its accuracy should be compared to that of microwave and satellite based systems, and any compromises in accuracy shall be justified.

A. Surf Zone Water Quality Monitoring

All surf zone stations shall be monitored as follows.

1. Grab samples shall be collected and analyzed for total and fecal coliform and enterococcus bacteria at a minimum frequency of one time per week. As required by implementation procedures at section III.D of the Ocean Plan, measurement of enterococcus density shall be conducted at all stations where measurement of total and fecal coliform bacteria is required.

If a single sample exceeds any of the single sample bacterial standards, repeat sampling at that location shall be conducted to determine the extent and persistence of the exceedance. Repeat sampling shall be conducted within 24 hours of receiving analytical results and continued until the sample result is less than the

single sample bacterial standards or until a sanitary survey is conducted to determine the source of the high bacterial densities.

Single sample bacterial standards include:

i. Total coliform density will not exceed 10,000 per 100 ml; or

ii. Fecal coliform density will not exceed 400 per 100 ml; or

iii. Total coliform density will not exceed 1,000 per 100 ml when the ratio of fecal/total coliform exceeds 0.1;

iv. Enterococcus density will not exceed 104 per 100 ml.

2. At the same time samples are collected from surf zone stations, the following information shall be recorded: observation of wind direction and speed; weather (cloudy, sunny, or rainy); current direction; tidal conditions; and observations of water color, discoloration, oil and grease; turbidity, odor, and materials of sewage origin in the water or on the beach; water temperature (°F); and status of the mouth of the Buena Vista Lagoon (open, closed, flow, etc.).

B. Near Shore Water Quality Monitoring

All near shore stations shall be monitored as follows.

1. Reduced Monitoring

If the Executive Officer determines that the effluent complies with the effluent limitations and performance goals at section IV.A of this Order and the receiving water limitations at section V.A of this Order at all times, only reduced near shore water quality monitoring specified below is required.

Table E-9. Near Shore Water Quality Reduced Monitoring Requirements

Determination	Units	Type of Sample	Minimum Frequency
Visual Observations	--	--	1/Month
Total Coliform Organisms	Number / 100 mL	Grab[1]	1/Month
Fecal Coliform Organisms	Number / 100 mL	Grab[1]	1/Month
Enterococcus	Number / 100 mL	Grab[1]	1/Month

[1] At the surface.

2. Intensive Monitoring

The intensive near shore water quality monitoring specified below is required during the 12-month period beginning November 1, 2013 through October 31, 2014, and must be submitted by December 1, 2014. This monitoring data will assist the San Diego Water Board in the evaluation of the Report of Waste Discharge. The intensive near shore water quality monitoring specified below may also be required if the Executive Officer determines that 1) the effluent does not at all times comply with

the effluent limitations and performance goals of this Order, or 2) the receiving water limitations of this Order are not being consistently achieved.

Table E-10. Near Shore Water Quality Intensive Monitoring Requirements

Determination	Units	Type of Sample	Minimum Frequency
Visual Observations	--	--	1/Month
Total Coliform Organisms	Number / 100 mL	Grab[1]	1/Month
Fecal Coliform Organisms	Number / 100 mL	Grab[1]	1/Month
Enterococcus	Number / 100 mL	Grab[1]	1/Month

[1] At the surface and mid-depth.

C. Off Shore Water Quality Monitoring

All off shore stations shall be monitored as follows.

1. Reduced Monitoring

If the Executive Officer determines that the effluent at all times complies with the effluent limitations and performance goals at section IV.A of this Order and the receiving water limitations at section V.A of this Order, only reduced off shore water quality monitoring specified below is required.

Table E-11. Off Shore Water Quality Reduced Monitoring Requirements

Determination	Units	Type of Sample	Minimum Frequency
Visual Observations	--	--	1/Month
Total Coliform Organisms	Number / 100 mL	Grab[1]	1/Month
Fecal Coliform Organisms	Number / 100 mL	Grab[1]	1/Month
Enterococcus	Number / 100 mL	Grab[1]	1/Month

[1] At surface and mid-depth.

2. Intensive Monitoring

The intensive off shore water quality monitoring specified below is required during the 12-month period beginning November 1, 2013 through October 31, 2014, and must be submitted by December 1, 2014. This monitoring data will assist the San Diego Water Board in the evaluation of the Report of Waste Discharge. The intensive off shore water quality monitoring specified below may also be required if the Executive Officer determines that 1) the effluent does not at all times comply with the effluent limitations and performance goals of this Order, or 2) the receiving water limitations of this Order are not being consistently achieved.

Table E-12. Off Shore Water Quality Intensive Monitoring Requirements

Determination	Units	Type of Sample	Minimum Frequency
Visual Observations	--	--	1/Month
Total Coliform Organisms	Number / 100 mL	Grab[1]	1/Month
Fecal Coliform Organisms	Number / 100 mL	Grab[1]	1/Month
Enteroccoccus	Number / 100 mL	Grab[1]	1/Month
Conductivity, Temperature, and Depth	Practical Salinity Units, °F, feet	Grab[2]	1/Month
Dissolved Oxygen	mg/L	Grab[2]	1/Month
Light Transmittance	percent	Instrument[2]	1/Month
pH	standard units	Grab[3]	1/Month

[1] At the surface and mid-depth.
[2] At the surface, mid-depth, and bottom.
[3] At the surface.

D. Benthic Monitoring

The intensive monitoring specified below is required during the 12-month period beginning November 1, 2013 through October 31, 2014, and must be submitted by December 1, 2014. This monitoring data will assist the San Diego Water Board in the evaluation of the Report of Waste Discharge. The sediment monitoring specified below may also be required if the Executive Officer determines that 1) the effluent does not at all times comply with Effluent Limitations and Performance Goals of this Order or 2) the receiving water limitations of this Order are not being consistently achieved. Benthic monitoring shall be conducted at all off shore monitoring stations.

1. **Sediment Characteristics**. Analyses shall be performed on the upper 2 inches of core.

Table E-13. Sediment Monitoring Requirements

Determination	Units	Type of Sample	Minimum Frequency
Sulfides	mg/kg	Core	2/Year
Total Chlorinated Hydrocarbons	mg/kg	Core	2/Year
Biochemical Oxygen Demand (5-day @ 20°C)	mg/kg	Core	2/Year
Chemical Oxygen Demand	mg/kg	Core	2/Year
Particle Size Distribution	mg/kg	Core	2/Year
Arsenic	mg/kg	Core	1/Year
Cadmium	mg/kg	Core	1/Year
Total Chromium	mg/kg	Core	1/Year
Copper	mg/kg	Core	1/Year
Lead	mg/kg	Core	1/Year
Mercury	mg/kg	Core	1/Year
Nickel	mg/kg	Core	1/Year
Silver	mg/kg	Core	1/Year
Zinc	mg/kg	Core	1/Year
Cyanide	mg/kg	Core	1/Year
Phenolic Compounds	mg/kg	Core	1/Year
Radioactivity	pCi/kg	Core	1/Year

2. **Infauna.** Samples shall be collected with a Paterson, Smith-McIntyre, or orange-peel type dredge, having an open sampling area of not less than 124 square inches and a sediment capacity of not less than 210 cubic inches. The sediment shall be sifted through a 1-millimeter mesh screen and all organisms shall be identified to as low a taxon as possible.

Table E-14. Infauna Monitoring Requirements

Determination	Units	Sample Type	Minimum Frequency
Benthic Biota	Identification and enumeration	3 Grabs	2/Year

E. Additional Biological Monitoring – Demersal Fish and Macroinvertebrates

The intensive monitoring specified below is required during the 12-month period beginning November 1, 2013 through October 31, 2014, and must be submitted by December 1, 2014. This monitoring data will assist the San Diego Water Board in the evaluation of the Report of Waste Discharge, which is required to be submitted by the Discharger within 180 days prior to the Order's expiration date of March 2, 2016.

Table E-15. Demersal Fish and Macroinvertebrates Monitoring Requirements

Determination	Units	Minimum Frequency
Biological Transects	Identification and enumeration	Year 4

In rocky or cobble areas, a 30-meter band transect, 1 meter wide, shall be established on the ocean bottom. Operations at each underwater station shall include: (1) recording of water temperature (may be measured from a boat) and estimated visibility and pelagic macrobiota at each 10-foot depth increment throughout the water column and at the bottom; (2) recording of general bottom description; (3) enumeration by estimate of the larger plants and animals in the band transect area; (4) development of a representative photographic record of the sample area; and (5) within each band, three ¼-meter square areas shall be randomly selected, and all macroscopic plant and animal life shall be identified within each square to as low a taxon as possible, and measured. Sampling techniques will follow those employed by biologist divers of the California State Department of Fish and Game.

In sandy areas, a 30-meter band transect, 1 meter wide, shall be established on the ocean bottom. Operations at each underwater station shall include: (1) recording of water temperature (may be measured from a boat), and estimated visibility and pelagic macrobiota at each 10-foot depth increment throughout the water column and at the bottom; (2) recording of general bottom description; (3) recording of height, period, and crest direction of ripple marks; (4) recording of amount, description, and location of detritus on bottom; (5) creation of a representative photographic record of the area sampled; and (6) within each band, three cores of at least 42.5 cm^2 in area shall be randomly taken to a depth of 15 cm where possible, (the three cores may be taken from a boat) and the material removed sifted through at least a 1 mm mesh screen, and all organisms identified to as low a taxon as possible, enumerated, measured, and

reproductive conditions assessed where feasible. Sampling techniques will follow those employed by biologist divers of the California State Department of Fish and Game.

For each epifauna and infauna, size frequency and distribution shall be shown for at least the three numerically largest populations identified to the lowest possible taxon and appropriate graphs showing the relationship between species frequency and population shall be plotted from each sample.

IX. OTHER MONITORING REQUIREMENTS

A. Kelp Bed Canopy

The Discharger shall participate with other ocean dischargers in the San Diego Region in an annual regional kelp bed photographic survey. Kelp beds shall be monitored annually by means of vertical aerial infrared photography to determine the maximum aerial extent of the region's coastal kelp beds within the calendar year. Surveys shall be conducted as close as possible to the time when kelp bed canopies cover the greatest area. The entire San Diego Region coastline, from the international boundary to the San Diego Region/Santa Ana Region boundary shall be photographed on the same day.

The images produced by the surveys shall be presented in the form of 1:24,000 scale photo-mosaic of the entire San Diego Region coastline. Onshore reference points, locations of all ocean outfalls and diffusers, and the 30-foot mean lower low water (MLLW) and 60-foot (MLLW) depth contours shall be shown.

The aerial extent of the various kelp beds photographed in each survey shall be compared to that noted in surveys of previous years. Any significant losses which persist for more than one year shall be investigated by divers to determine the probable reason for the loss.

B. Regional Monitoring

The Discharger is required to participate in regional monitoring activities pursuant to CWC 13267, 13383, and 40 CFR 122.48. The intent of regional monitoring activities is to maximize the efforts of all monitoring partners using a more cost-effective monitoring design and to best utilize the pooled scientific resources of the region. During these coordinated sampling efforts, the Discharger's sampling and analytical effort may be reallocated to provide a regional assessment of the impact of the discharge of municipal wastewater to the Southern California Bight. Anticipated modifications to the monitoring program will be coordinated so as to provide a more comprehensive picture of the ecological and statistical significance of monitoring results and to determine cumulative impacts of various pollution sources. The level of effort will be provided to the Executive Officer and USEPA for approval.

C. Solids Monitoring

The Discharger shall report, annually, the volume of screenings, sludge [biosolids], grit, and other solids generated and/or removed during wastewater treatment and the locations where these waste materials are placed for disposal. Copies of all annual reports required by 40 CFR Part 503 shall be submitted to the San Diego Water Board at the same time they are submitted to the USEPA.

X. REPORTING REQUIREMENTS

A. General Monitoring and Reporting Requirements

1. The Discharger shall comply with all Standard Provisions (Attachment D of this Order) related to monitoring, reporting, and recordkeeping.

2. Reports of marine monitoring surveys conducted to meet receiving water monitoring requirements of this MRP shall include, as a minimum, the following information:

a. A description of climatic and receiving water characteristics at the time of sampling (weather observations, floating debris, discoloration, wind speed and direction, swell or wave action, time of sampling, tide height, etc.).

b. A description of sampling stations, including differences unique to each station (e.g., station location, sediment grain size, distribution of bottom sediments, rocks, shell litter, calcareous worm tubes, etc.).

c. A description of the sample collection and preservation procedures used in the survey.

d. A description of the specific method used for laboratory analysis.

e. An in-depth discussion of the results of the survey. All tabulations and computations shall be explained.

f. Annual reports will include detailed statistical analyses of all data. Methods may include, but are not limited to, various multivariate analyses such as cluster analysis, ordination, and regression. The Discharger should also conduct additional analyses, as appropriate, to elucidate temporal and spatial trends in the data.

3. The Discharger shall report all instances of noncompliance not reported under Attachment D, sections III, V, and VI of this Order at the time monitoring reports are submitted.

4. By March 1 of each year, the Discharger shall submit an annual report to the San Diego Water Board and USEPA Region 9 that contains tabular and graphical summaries of the monitoring data obtained during the previous year. The Discharger shall discuss the compliance record and corrective actions taken, or

which may be taken, or which may be needed to bring the discharge into full compliance with the requirements of this Order and this MRP.

B. Self Monitoring Reports (SMRs)

1. At any time during the term of this permit, the State or San Diego Water Board may notify the Discharger to electronically submit Self-Monitoring Reports (SMRs) using the State Water Board's California Integrated Water Quality System (CIWQS) Program Web site (http://www.waterboards.ca.gov/ciwqs/index.html). Until such notification is given, the Discharger shall submit hard copy SMRs. When electronic submittal of data is required, the CIWQS Web site will provide additional directions for SMR submittal in the event there will be service interruption for electronic submittal.

2. The Discharger shall report in the SMR the results for all monitoring specified in this MRP under sections III through IX. The Discharger shall submit monthly SMRs including the results of all required monitoring using USEPA-approved test methods or other test methods specified in this Order. If the Discharger monitors any pollutant more frequently than required by this Order, the results of this monitoring shall be included in the calculations and reporting of the data submitted in the SMR.

3. Unless otherwise noted in the MRP, monitoring periods and reporting for all required monitoring shall be completed according to the following schedule:

Table E-16. Monitoring Periods and Reporting Schedule

Sampling Frequency/ Report Type	Monitoring Period Begins	Monitoring Period	SMR Due Date
Continuous	First day of the calendar month following the permit effective date or on permit effective date if that date is first day of the month.	All	First day of second calendar month following month of sampling.
1/Day	First day of the calendar month following the permit effective date or on permit effective date if that date is first day of the month.	(Midnight through 11:59 PM) or any 24-hour period that reasonably represents a calendar day for purposes of sampling.	First day of second calendar month following month of sampling.
1/Week	First Sunday of the calendar month following the permit effective date or on permit effective date if on a Sunday.	Sunday through Saturday	First day of second calendar month following month of sampling.
1/Month	First day of calendar month following permit effective date or on permit effective date if that date is first day of the month.	First day of calendar month through last day of calendar month	First day of second calendar month following month of sampling.

Sampling Frequency/ Report Type	Monitoring Period Begins	Monitoring Period	SMR Due Date
1/Quarter	Closest of January 1, April 1, July 1, or October 1 following (or on) permit effective date.	January 1 through March 31 April 1 through June 30 July 1 through September 30 October 1 through December 31	May 1 August 1 November 1 February 1
2/Year	Closest of January 1 or July 1 following (or on) permit effective date.	January 1 through June 30 July 1 through December 31	August 1 February 1
Significant Industrial User Compliance Status Report	Closest of January 1 or July 1 following (or on) permit effective date.	January 1 through June 30 July 1 through December 31	September 1 March 1
1/Year Pretreatment Program Biosolids Report Compliance Schedule – progress report	January 1 following (or on) permit effective date.	January 1 through December 31	March 1 (Biosolids Report – February 19)
Intensive Monitoring	November 1, 2013	November 1, 2013 through October 31, 2014	December 1, 2014

4. **Reporting Protocols.** The Discharger shall report with each sample result the applicable reported Minimum Level (ML) and the current Method Detection Limit (MDL), as determined by the procedure in 40 CFR Part 136. For each numeric effluent limitation or performance goal for a parameter identified in Table B of the Ocean Plan, the Discharger shall not use a ML greater than that specified in Appendix II of the Ocean Plan.

   The Discharger shall report the results of analytical determinations for the presence of chemical constituents in a sample using the following reporting protocols:

   a. Sample results greater than or equal to the reported ML shall be reported as measured by the laboratory (i.e., the measured chemical concentration in the sample).

   b. Sample results less than the minimum level (ML), but greater than or equal to the laboratory's MDL, shall be reported as "Detected, but Not Quantified," or DNQ. The estimated chemical concentration of the sample shall also be reported.

   For the purposes of data collection, the laboratory shall write the estimated chemical concentration next to DNQ as well as the words "Estimated Concentration" (may be shortened to "Est. Conc."). The laboratory may, if such information is available, include numerical estimates of the data quality for the

reported result. Numerical estimates of data quality may be percent accuracy (+ a percentage of the reported value), numerical ranges (low to high), or any other means considered appropriate by the laboratory.

c. Sample results less than the laboratory's MDL shall be reported as "Not Detected," or ND.

d. Dischargers are to instruct laboratories to establish calibration standards so that the ML value (or its equivalent if there is differential treatment of samples relative to calibration standards) is the lowest calibration standard. At no time is the Discharger to use analytical data derived from extrapolation beyond the lowest point of the calibration curve.

5. **Compliance Determination.** Compliance with effluent limitations for reportable pollutants shall be determined using sample reporting protocols defined above and Attachment A of this Order. For purposes of reporting and administrative enforcement by the Regional and State Water Boards, the Discharger shall be deemed out of compliance with effluent limitations if the concentration of the reportable pollutant in the monitoring sample is greater than the effluent limitation and greater than or equal to the reported ML.

6. **Multiple Sample Data.** When determining compliance with a measure of central tendency (arithmetic mean, geometric mean, median, etc.) of multiple sample analyses and the data set contains one or more reported determinations of DNQ or ND, the Discharger shall compute the median in place of the arithmetic mean in accordance with the following procedure:

   a. The data set shall be ranked from low to high, ranking the reported ND determinations lowest, DNQ determinations next, followed by quantified values (if any). The order of the individual ND or DNQ determinations is unimportant.

   b. The median value of the data set shall be determined. If the data set has an odd number of data points, then the median is the middle value. If the data set has an even number of data points, then the median is the average of the two values around the middle unless one or both of the points are ND or DNQ, in which case the median value shall be the lower of the two data points where DNQ is lower than a value and ND is lower than DNQ.

7. The Discharger shall submit SMRs in accordance with the following requirements:

   a. The Discharger shall arrange all reported data in a tabular format. The data shall be summarized to clearly illustrate whether the facility is operating in compliance with interim and/or final effluent limitations. The Discharger is not required to duplicate the submittal of data that is entered in a tabular format within CIWQS. When electronic submittal of data is required and CIWQS does not provide for entry into a tabular format within the system, the Discharger shall electronically submit the data in a tabular format as an attachment.

b. The Discharger shall attach a cover letter to the SMR. The information contained in the cover letter shall clearly identify violations of the waste discharge requirements; discuss corrective actions taken or planned; and the proposed time schedule for corrective actions. Identified violations must include a description of the requirement that was violated and a description of the violation.

c. SMRs must be submitted to the San Diego Water Board, signed and certified as required by the Standard Provisions (Attachment D of this Order), to the address listed below:

9174 Sky Park Court, Suite 100
San Diego, CA 92123-4340

C. Discharge Monitoring Reports (DMRs)

1. As described in section X.B.1 above, at any time during the term of this permit, the State or San Diego Water Board may notify the Discharger to electronically submit SMRs that will satisfy federal requirements for submittal of Discharge Monitoring Reports (DMRs). Until such notification is given, the Discharger shall submit DMRs in accordance with the requirements described below.

2. DMRs must be signed and certified as required by the standard provisions (Attachment D of this Order). The Discharger shall submit the original DMR and one copy of the DMR to the address listed below:

STANDARD MAIL	FEDEX/UPS/ OTHER PRIVATE CARRIERS
State Water Resources Control Board Division of Water Quality c/o DMR Processing Center PO Box 100 Sacramento, CA 95812-1000	State Water Resources Control Board Division of Water Quality c/o DMR Processing Center 1001 I Street, 15th Floor Sacramento, CA 95814

3. All discharge monitoring results must be reported on the official USEPA pre-printed DMR forms (EPA Form 3320-1). Forms that are self-generated will not be accepted unless they follow the exact same format of USEPA Form 3320-1.

D. Other Reports

1. The Discharger shall report the results of any chronic toxicity testing, TRE/TIE, Oceanside Ocean Outfall Capacity Study, Treatment Plant Capacity Study, Sludge Disposal Report, and Pretreatment Report, as required by Special Provisions – VI.C. of this Order. The Discharger shall submit reports with the first monthly SMR scheduled to be submitted on or immediately following the report due date.

Attachment F – Fact Sheet

Table of Contents

I. Permit Information ..... F-4~~F-5~~
II. Facility Description ..... F-5~~F-6~~
A. Description of Wastewater and Biosolids Treatment or Controls ..... F-5~~F-6~~
B. Discharge Points and Receiving Waters ..... F-7~~F-8~~
C. Summary of Existing Requirements and Self-Monitoring Report (SMR) Data F-10~~F-11~~
D. Compliance Summary ..... F-12~~F-13~~
E. Planned Changes ..... F-13~~F-14~~
III. Applicable Plans, Policies, and Regulations ..... F-13~~F-14~~
A. Legal Authorities ..... F-13~~F-14~~
B. California Environmental Quality Act (CEQA) ..... F-13~~F-14~~
C. State and Federal Regulations, Policies, and Plans ..... F-13~~F-14~~
D. Impaired Water Bodies on CWA 303(d) List ..... F-15~~F-16~~
E. Other Plans, Policies and Regulations ..... F-15~~F-16~~
IV. Rationale For Effluent Limitations and Discharge Specifications ..... F-16~~F-17~~
A. Discharge Prohibitions ..... F-16~~F-17~~
B. Technology-Based Effluent Limitations ..... F-17~~F-18~~
C. Water Quality-Based Effluent Limitations (WQBELs) ..... F-19~~F-20~~
1. Scope and Authority ..... F-19~~F-20~~
2. Applicable Beneficial Uses and Water Quality Criteria and Objectives ..... F-20~~F-21~~
3. Determining the need for WQBELs ..... F-21~~F-22~~
4. WQBEL Calculations ..... F-26~~F-27~~
5. Whole Effluent Toxicity (WET) ..... F-28~~F-29~~
D. Final Effluent Limitations ..... F-29~~F-30~~
1. Final Effluent Limitations ..... F-29~~F-30~~
The following tables list the effluent limitations established by this Order. Where this Order establishes mass emission limitations, these limitations have been derived based on a flow of 13.5 MGD (and 15.4 MGD, based on the available capacity of the land outfall to the OOO) for SLRWRF to the OOO through the land outfall; 5.5 MGD for LSWTP; and 2.0 MGD for MBDF. Mass emission limitations for the combined flow have been based on the potential available capacity conditions of the OOO. ..... F-29~~F-30~~
2. Satisfaction of Anti-Backsliding Requirements ..... F-31~~F-32~~
3. Satisfaction of Antidegradation Policy ..... F-31~~F-32~~
4. Stringency of Requirements for Individual Pollutants ..... F-32~~F-33~~
E. Performance Goals ..... F-33~~F-34~~
F. Interim Effluent Limitations ..... F-38~~F-39~~
G. Land Discharge Specifications – Not Applicable ..... F-38~~F-39~~
H. Reclamation Specifications ..... F-38~~F-39~~
V. Rationale for Receiving Water Limitations ..... F-38~~F-39~~
VI. Rationale for Monitoring and Reporting Requirements ..... F-38~~F-39~~
A. Influent Monitoring ..... F-38~~F-39~~
B. Effluent Monitoring ..... F-38~~F-39~~

C. Whole Effluent Toxicity Testing Requirements ..... F-39~~F-40~~
D. Receiving Water Monitoring ..... F-39~~F-40~~
E. Other Monitoring Requirements ..... F-40~~F-41~~
VII. Rationale for Provisions ..... F-40~~F-41~~
A. Standard Provisions ..... F-40~~F-41~~
B. Special Provisions ..... F-41~~F-42~~
1. Reopener Provisions ..... F-41~~F-42~~
2. Special Studies and Additional Monitoring Requirements ..... F-41~~F-42~~
a. Spill Prevention and Response Plans ..... F-41~~F-42~~
b. Spill Reporting Requirements. ..... F-41~~F-42~~
c. Whole Effluent Toxicity (WET) ..... F-42~~F-43~~
3. Best Management Practices and Pollution Prevention – Not Applicable ..... F-43~~F-44~~
4. Construction, Operation, and Maintenance Specifications – Not Applicable ..... F-43~~F-44~~
5. Special Provisions for Wastewater Facilities ..... F-43~~F-44~~
6. Other Special Provisions – Not Applicable ..... F-45~~F-46~~
7. Compliance Schedules ..... F-45~~F-46~~
VIII. Public Participation ..... F-46~~F-47~~
A. Notification of Interested Parties ..... F-46~~F-47~~
B. Written Comments ..... F-46~~F-47~~
C. Public Hearing ..... F-47~~F-48~~
D. Waste Discharge Requirements Petitions ..... F-47~~F-48~~
E. Information and Copying ..... F-47~~F-48~~
F. Register of Interested Persons ..... F-47~~F-48~~
G. Additional Information ..... F-48~~F-49~~

List of Tables

Table F-1. Facility Information ..... F-4~~F-4~~
Table F-2. Facility Information ..... F-9~~F-9~~
Table F-3. Historic Effluent Limitations and Monitoring Data at M-001 ..... F-11~~F-11~~
Table F-4. Historic Effluent Limitations and Monitoring Data at M-002 ..... F-11~~F-11~~
Table F-5. Historic Effluent Limitations and Monitoring Data at Outfall 001 (M-004, previously M-003) ..... F-11~~F-11~~
Table F-6. Basin Plan Beneficial Uses ..... F-14~~F-14~~
Table F-7. Ocean Plan Beneficial Uses ..... F-14~~F-14~~
Table F-8. Summary of Technology-Based Effluent Limitations Based on Secondary Treatment Standards ..... F-18~~F-18~~
Table F-9. Summary of Technology-Based Effluent Limitations Based on Table A of the Ocean Plan ..... F-19~~F-19~~
Table F-10. RPA Results Summary ..... F-22~~F-22~~
Table F-11. Pollutants Having Background Concentrations ..... F-27~~F-27~~
Table F-12. Example Parameter Water Quality Objectives ..... F-27~~F-27~~
Table F-13. Summary of Water Quality-based Effluent Limitations – Discharge Point No. 001 ..... F-28~~F-28~~
Table F-14.a. Technology Based Effluent Limitations for SLRWRF at M-001 ..... F-29~~F-29~~

Table F-14.b. Technology Based Effluent Limitations for LSWTP at M-002 ..... F-30~~F-30~~
Table F-14.c. Technology Based Effluent Limitations for MBDF Based on Table A of the Ocean Plan at M-003 ..... F-30~~F-30~~
Table F-14.d. Effluent Limitations for Combined Flow Based on Table B of the Ocean Plan at M-004 (previously M-003) ..... F-30~~F-30~~
Table F-15. Performance Goals Based on the Ocean Plan ..... F-33~~F-33~~

ATTACHMENT F – FACT SHEET

As described in section II of this Order, this Fact Sheet includes the legal requirements and technical rationale that serve as the basis for the requirements of this Order.

This Order has been prepared under a standardized format to accommodate a broad range of discharge requirements for Dischargers in California. Only those sections or subsections of this Order that are specifically identified as "not applicable" have been determined not to apply to this Discharger. Sections or subsections of this Order not specifically identified as "not applicable" are fully applicable to this Discharger.

I. PERMIT INFORMATION

The following table summarizes administrative information related to the Facility.

Table F-1. Facility Information

WDID	9 000000146	
Discharger	City of Oceanside	
Name of Facility	Oceanside Ocean Outfall	
Facility Address	**San Luis Rey Water Reclamation Facility**	3950 N. River Rd Oceanside, CA 92058 San Diego County
	La Salina Wastewater Treatment Plant	1330 Tait Street Oceanside, CA 92054 San Diego County
	Mission Basin Desalting Facility	Fireside & Heritage Street Oceanside, CA 92054
Facility Contact, Title and Phone	Mark Anderson, Water Utilities Division Manager, (760) 435-5957	
Authorized Person to Sign and Submit Reports	Mark Anderson, Water Utilities Division Manager, (760) 435-5957	
Mailing Address	300 N. Coast Highway, Oceanside, CA 92054	
Billing Address	Same as Mailing Address	
Type of Facility	Publicly Owned Treatment Works (POTW)	
Major or Minor Facility	Major	
Threat to Water Quality	1	
Complexity	A	
Pretreatment Program	Yes	
Reclamation Requirements	Producer and Distributor (regulated under separate waste discharge requirements (WDRs))	

Facility Permitted Discharge Flow Rate	• San Luis Rey Water Reclamation Facility -13.5 million gallons per day (MGD) discharge to the OOO through the land outfall; or up to 15.4 MGD if written authorization is obtained from the San Diego Water Board pursuant to section VI.C.5.a.ii. of this Order. • La Salina Wastewater Treatment Plant - 5.5 MGD • Mission Basin Desalting Facility – 2.0 MGD • Combined discharge to the Oceanside Ocean Outfall, including discharges from the SLRWRF, LSWTP, MBDF, Genentech, Fallbrook Public Utility District (PUD), and US Marine Corps Camp Pendleton[1] – 22.6 MGD; however the permitted combined discharge flow rate to the Oceanside Ocean Outfall from the SLRWRF, LSWTP, BMGPF, Genentech, Fallbrook Public Utility District, and US Marine Corps Camp Pendleton may be increased to 23.1 MGD, 23.4 MGD, or 24.4 MGD if written authorization is obtained from the San Diego Water Board pursuant to section VI.C.5.a.i of this Order.
Facility Design Flow	same as Facility Permitted Discharge Flow Rate above
Watershed	Pacific Ocean
Receiving Water	Pacific Ocean
Receiving Water Type	Ocean

1. Discharges from Genentech, Fallbrook PUD, and the US Marine Corps Camp Pendleton to the Oceanside Ocean Outfall are regulated under separate waste discharge requirements/NPDES permits.

A. The City of Oceanside (hereinafter Discharger) is the owner and operator of the Oceanside Ocean Outfall (OOO), the San Luis Rey Water Reclamation Facility (SLRWRF), the La Salina Wastewater Treatment Plant (LSWTP), and the City of Oceanside sanitary sewer system; together these facilities comprise a municipal POTW. The Discharger also owns and operates the Mission Basin Desalting Facility (MBDF). Hereinafter, these facilities are collectively referred to as the Facility.

For the purposes of this Order, references to the "discharger" or "permittee" in applicable federal and state laws, regulations, plans, or policy are held to be equivalent to references to the Discharger herein.

B. The Facility discharges effluent consisting of treated wastewater from the SLRWRF and LSWTP and waste brine from the MBDF through the OOO to the Pacific Ocean, a water of the United States, and is currently regulated by Order No. R9-2005-0136, which was adopted on August 10, 2005 and expires on August 10, 2010.

C. The Discharger filed a Report of Waste Discharge (ROWD) and submitted an application for renewal of its Waste Discharge Requirements (WDRs) and National Pollutant Discharge Elimination System (NPDES) permit on February 9, 2010.

II. FACILITY DESCRIPTION

A. Description of Wastewater and Biosolids Treatment or Controls

The City of Oceanside owns and operates the OOO, the SLRWRF, the LSWTP, and City of Oceanside sanitary sewer system. The Discharger also owns and operates the MBDF. These facilities are collectively referred to as the Discharger's Facilities in this

Order. This Order establishes discharge prohibitions, limitations, and conditions to regulate discharges of effluent consisting of treated wastewater and waste brine from the Discharger's Facilities to the Pacific Ocean; these discharges were regulated by Order No. R9-2005-0136 (NPDES permit No. CA0107433) that expired on August 10, 2010.

Treated wastewaters from SLRWTP and LSWTP and waste brine from MBDF are hereinafter collectively referred to as Effluent. Treated wastewaters from SLRWTP, LSWTP, Fallbrook Public Utility District POTW (regulated under separate waste discharge requirements and NPDES Permit), and US Marine Corps Base Camp Pendleton (regulated under separate waste discharge requirements and NPDES Permit) and waste brine from Genentech (regulated under separate waste discharge requirements and NPDES Permit) and MBDF are hereinafter collectively referred to as Combined Effluent.

1. **Publicly Owned Treatment Works.** The Discharger provides municipal wastewater treatment services to a population of approximately 180,000 within the boundaries of the City of Oceanside. Additionally, the SLRWRF serves a population of approximately 10,000 within the Rainbow Municipal Water District. The Rainbow Municipal Water District owns 1.5 MGD of the City of Oceanside's treatment capacity, and is responsible for its sanitary sewer system up to the point where it connects with the Oceanside sanitary sewer system. To reduce pumping costs, the City of Oceanside has an agreement with the City of Vista for the exchange, treatment, and disposal of equal volumes of nonindustrial wastewater generated in the respective service areas. There are nine significant industrial users within the City of Oceanside and none within the portions of the City of Vista and Rainbow Municipal Water District that are served by the Discharger.

   The LSWTP is located at 1330 South Tait Street in the City of Oceanside, adjacent to the mouth of Loma Alta Creek. Wastewater treatment unit operations and processes at LSWTP consist of preliminary treatment by mechanical bar screening, flow equalization, aerated grit removal, primary sedimentation, and biological treatment using activated sludge followed by secondary clarification. Treated wastewater is discharged to the Pacific Ocean through the OOO. Secondary treatment design capacity at LSWTP is currently 5.5 MGD average daily flow. The annual average daily flow at LSWTP in 2009 was 3.0 MGD.

   The SLRWRF is located at 3950 North River Road in the City of Oceanside, north of the San Luis Rey River. The SLRWRF consists of an East Plant treatment train and a West Plant treatment train. Wastewater treatment unit operations and processes at SLRWRF consist of preliminary treatment by mechanical bar screening, aerated grit removal, flow equalization, primary sedimentation, and biological treatment using activated sludge followed by secondary clarification. Treated wastewater is discharged through the OOO via a 24-inch land outfall pipeline which connects the SLRWRF with the OOO. The SLRWRF also produces up to 0.7 MGD of disinfected tertiary effluent recycled water, the discharge of which is currently covered under Order No. 93-07, Waste Discharge Requirements for the San Luis Rey Water

Reclamation Facility, City of Oceanside, San Diego County. Secondary treatment design capacity at SLRWRF is currently 15.4 MGD as a maximum 30-day average daily flow and 13.5 MGD as an annual design average. The actual annual average daily flow at SLRWRF in 2009 was 9.0 MGD.

As part of the ROWD, the Discharger submitted a report certifying the capacities of the facilities. At the time of adoption, screenings from the headworks and solids from grit removal at LSWTP and SLRWRF are collected on-site and trucked to landfills in Yuma County, Arizona. Sludge from the secondary treatment facilities is thickened by gravity belt thickeners (SLRWRF) and by dissolved air floatation (LSWTP). Both sludges are anaerobically digested and dewatered. Dewatered sludge is hauled to a land application site by a contractor.

2. **Mission Basin Desalting Facility** The MBDF, located northwest of the intersection of Fireside Street and Heritage Street in Oceanside, treats groundwater for municipal potable water supply. The facility extracts groundwater from the Mission Hydrologic Subarea (HSA) (3.11) and provides treatment consisting of pH adjustment, filtration, and demineralization by reverse osmosis. The MBDF consists of two treatment trains. Up to 2.1 MGD of groundwater undergoes iron and manganese removal, air stripping, and disinfection. Wastewaters from these processes are discharged to the sanitary sewer and do not contribute to the effluent discharged to the OOO. Up to 5.8 MGD of groundwater undergoes chemical addition and cartridge filtration prior to being pumped to two reverse osmosis trains. The product water from the reverse osmosis treatment trains then undergoes air stripping and disinfection, prior to potable use. The only discharge from the MBDF to the OOO is brine from the reverse osmosis treatment process. See Attachment C of this Order for a flow diagram of the MBDF.

   Waste brines generated at MBDF are conveyed via a 10” brine line which connects the MBDF and brine from Genentech to the OOO. The MBDF has a potable water production design capacity of 6.37 MGD which results in less than 2 MGD of waste brine per day. The annual average daily flow of waste brine from MBDF to the OOO during 2005 through 2009 ranged from approximately 0.2 MGD to 1.3 MGD. Future brine flows are projected to continue to be below 2.0 MGD.

B. Discharge Points and Receiving Waters

The SLRWRF and LSWTP discharge secondary effluent to the OOO via pump stations and a land outfall system. SLRWRF effluent is pumped to the LSWTP via an effluent pump station that conveys wastewater through a 34,000-foot long land outfall. LSWTP effluent is conveyed to the OOO via an onsite effluent pump station and a 400-foot long land outfall. Separate land outfalls connect discharges from MBDF, Genentech and Fallbrook Public Utility District into the Discharger’s land outfalls and discharges from Camp Pendleton into the OOO. As the owner/operator, the Discharger has the ability to control discharges to the OOO.

The original land outfall consists of a 24-inch diameter ductile iron pipeline that has a pressure rating of 150 pounds per square inch (psi). The design capacity of the original 24-inch-diameter land outfall was limited to 13.5 MGD to avoid exceeding this pressure rating. Usable capacity of the land outfall, however, has been constrained by high head losses in the OOO. In 2009, the Discharger completed construction of the first segment of the new 36-inch-diameter land outfall. The newly constructed segment of 36-inch-diameter pipe extends approximately 6,020 feet along Oceanside Blvd. The capacity of the land outfall currently remains below 13.5 MGD.

In a December 2, 2010 comment to the San Diego Water Board regarding this Order the Discharger stated, "Additionally, the City is planning improvements to the land outfall that will increase the capacity of the land outfall to accommodate the 15.4 maximum 30-day capacity of the SLRWRF. To address the City's current ability to treat more than 13.5 MGD at the SLRWRF using onsite storage, and to address planned improvements to the capacity of the land outfall, [it is requested that the permit allow for an increase of flow from SLRWRF to the OOO through the land outfall from 13.5 MGD to 15.4 MGD]."

Because the overall discharge volume of the OOO would not be increased and the permitted volume of flow from SLRWRF would not increase (Order No. R9-2005-0136 authorized a discharge of 15.4 MGD even though the land outfall capacity was not sufficient to transport this volume to the OOO), the San Diego Water Board has established conditional requirements to ensure adequate capacity is available in the land outfall prior to allowing the discharge of 15.4 MGD from SLRWRF, as specified in section VI.C.5.a.ii of the Order.

The Discharger owns and operates the OOO which begins at the LSWTP site just north of the mouth of the Loma Alta Creek and extends southwesterly approximately 8,850 feet offshore to a depth of approximately 100 feet. The OOO contains a 38-inch internal diameter steel pipe with a 1-inch thick cement mortar interior lining and 2.75-inch thick cement mortar outer jacket. The OOO has a 35.75-inch internal diameter. The OOO terminates with a 230-foot diffuser collinear with the rest of the outfall and extends to a depth of approximately 108 feet. The diffuser has fourteen 5-inch diameter ports and ten 4-inch diameter ports. The terminus of the diffuser is located at Latitude 33° 09' 46" North, Longitude 117° 23' 29" W.

Historically, the Discharger has been subject to a flow limitation of 22.9 MGD for the discharge of effluent from the LSWTP, the SLRWRF and the MBDF through the OOO to the Pacific Ocean. The Discharger has a contract with the Fallbrook Public Utility District (FPUD) for the discharge of an average annual flowrate of 2.4 MGD of treated wastewater from the FPUD through the OOO, subject to waste discharge requirements contained in Order No. R9-2005-0137 (NPDES No. CA0108031). The City of Oceanside has a contract with the United States Marine Corp Base Camp Pendleton (USMCBCP) for the discharge of up to 3.6 MGD of undisinfected secondary effluent, treated at USMCBCP Southern Regional Tertiary Treatment Plant to the Pacific Ocean through the OOO. These discharges are subject to waste discharge requirements contained in Order No. R9-2008-0096 (NPDES Permit No. CA0109347) which was adopted by the San Diego Water Board on September 10, 2008. As of 2008, the City of

Oceanside has a contract with Genentech to discharge a wastewater flow up to 1.396 MGD to SLRWRF and to discharge brine flow up to 0.85 MGD to the OOO. Note that the commingling of Genentech brine waste with the discharge flows at Discharge Point No. 001 (Monitoring Station M-004, previously M-003) has the potential to impact the Discharger's ability to comply with effluent limitations. The combined permitted flow rate from all parties discharging through the OOO was 29.055 MGD.

Section II.B of the Fact Sheet for Order No. R9-2005-0136 stated that the design capacity of the OOO is an average daily flow of 30 MGD, with a maximum rated peak-day capacity of 45 MGD. However, during an inspection of the OOO in 2009, the Discharger determined that the outfall interior diameter is 35.75-inches, not 36-inches as shown in the construction drawings and previously recorded in the Fact Sheet for Order No. R9-2005-0136. The Discharger's 2009 inspection also determined that a coating of soft muck is currently coating the entire interior circumference of the outfall pipe, reducing outfall capacity. Further, a sediment survey of the diffuser confirmed a sediment buildup, particularly near the end of the diffuser, also contributing to a loss of outfall capacity. The Discharger submitted these findings to the San Diego Water Board in a 2010 Ocean Outfall Capacity Report. The report concludes that the current available capacity of the OOO is 22.6 MGD, significantly less than the previously reported 30 MGD. However, the Discharger reported that this capacity is sufficient until 2016, when wet weather flows may result in an exceedance of the OOO capacity.

Below is a table provided by the Discharger demonstrating projected peak flows to the OOO if the 30 million gallon effluent storage pond for SLRWRF is not used.

Table F-2. Facility Information

Source	Peak Day Flow (MGD)	Projected Peak Flow (MGD) Under Wet Weather Conditions[1]		
		Current	Projected 2015	Projected 2020
Peak inflow to SLRWRF and LSWTP	15.75[2]	18.22[7]	19.93[7]	20.70[7]
MBDF	1.3[3]	1.26	1.26[3]	1.26[3]
Genentech, Inc.	0.11[2]	0.11[4]	0.2[4]	0.2[4]
Camp Pendleton	2.8[5]	2.8[5]	2.8[5]	2.8[5]
Fallbrook PUD	2.5[6]	2.5[6]	2.5[6]	2.5[6]
Total	21.18	24.89[7]	26.69[7]	27.46[7]

1 From Ocean Outfall Capacity Evaluation Report (Carrollo Engineers, 2010).
2 Observed maximum day flow during 2009.
3 Based on typical peak day brine flow observed in 2009.
4 Based on flow projections from Genentech, Inc.
5 Historic Camp Pendleton peak wet weather discharge to the OOO, which occurred during wet weather period in winter of 2005.
6 Historic Fallbrook PUD peak wet weather discharge to the OOO, which occurred during wet weather period in winter 2005.
7 Combined projected peak inflow to the LSWTP and SLRWRF. Actual wet weather discharge flows from the two plants to the OOO will be lower than these projected values through the use of effluent storage capacity at the SLRWRF.

Prior to 2016, the Discharger plans to clean muck and debris from the interior of the outfall which will serve to increase the outfall capacity to 23.4 MGD and provide sufficient capacity until approximately 2025. The Discharger further states in the ROWD that additional capacity could be obtained until approximately 2030 if the Discharger replaces a short section of metering pipe at the LSWTP that is currently causing back-pressure on the LSWTP effluent pumps. The OOO section replacement alone would increase capacity to 23.1 MGD, and up to 24.4 MGD when combined with the OOO cleaning.

Based on the Discharger's 2010 Ocean Outfall Capacity Report, this Order prohibits the discharge of wastes at a rate in excess of 22.6 MGD from the Discharger's facilities, Genentech, Fallbrook Public Utilities District, and US Marine Corps Base Camp Pendleton. Section VI.C.5.a.i of the Order allows for the Discharger to increase this total OOO flow to either 23.1 MGD, 23.4 MGD, or 24.4 MGD based on the cleaning and/or section replacement of the OOO. The Discharger shall be responsible for managing effluent flows to the OOO to ensure compliance with the flow rate prohibitions established in the Order. As discussed above, the Discharger reports that they can maintain compliance with the flow prohibitions through 2016 with the current outfall conditions, and through approximately 2030 with additional measures.

C. Summary of Existing Requirements and Self-Monitoring Report (SMR) Data

As discussed later in this Fact Sheet, the previous monitoring location for the combined discharge through Discharge Point No. 001 has been revised from M-003 to M-004. Monitoring Location M-003 has been assigned to the discharge of waste brine from MBDF in this permit.

Effluent limitations contained in Order No. R9-2005-0136 for discharges from the Facility and representative monitoring data obtained at Monitoring Location M-001, M-002 and at Discharge Point No. 001 (M-004, previously M-003) are as follows:

Table F-3. Historic Effluent Limitations and Monitoring Data at M-001

Parameter	Units	Effluent Limitation			Monitoring Data (July 2005 – February 2010)		
		Average Monthly	Average Weekly	Maximum Daily	Highest Average Monthly Discharge	Highest Average Weekly Discharge	Highest Daily Discharge
Carbonaceous Biochemical Oxygen Demand (5-day @ 20°C) ($CBOD_5$)	mg/L	25	40	--	6.8	8.0	14
	lbs/day	3,200	5,100	--	540	740	1,200
	% Removal	85	--	--	NR	--	--
Total Suspended Solids (TSS)	mg/L	30	45	--	10	12	35
	lbs/day	3,900	5,800	--	850	1,100	3,100
	% Removal	85	--	--	NR	--	--
pH	standard units	--	--	6.0 – 9.0[1]	--	--	6.9/7.8

[1] Between 6.0 and 9.0 at all times.

Table F-4. Historic Effluent Limitations and Monitoring Data at M-002

Parameter	Units	Effluent Limitation			Monitoring Data (July 2005 – February 2010)		
		Average Monthly	Average Weekly	Maximum Daily	Highest Average Monthly Discharge	Highest Average Weekly Discharge	Highest Daily Discharge
$CBOD_5$	mg/L	25	40	--	15	52	57
	lbs/day	1,100	1,800	--	150	500	640
	% Removal	85	--	--	NR	--	--
TSS	mg/L	30	45	--	22	60	72
	lbs/day	1,400	2,100	--	190	260	550
	% Removal	85	--	--	NR	--	--
pH	standard units	--	--	6.0 – 9.0[1]	--	--	NR

[1] Between 6.0 and 9.0 at all times.

Table F-5. Historic Effluent Limitations and Monitoring Data at Outfall 001 (M-004, previously M-003)

Parameter	Units	Effluent Limitation			Monitoring Data (July 2005 – February 2010)		
		Average Monthly	Average Weekly	Maximum Daily	Highest Average Monthly Discharge	Highest Average Weekly Discharge	Highest Daily Discharge
Oil and Grease	mg/L	25	40	75[1]	3.9	NR	NR
	lbs/day	4,400	7,000	14,000[1]		NR	NR
Settleable Solids	mL/L	1.0	1.5	3.0[1]	0.2	0.6	2.5
Turbidity	NTU	75	100	225[1]	4.6	13	26
Total Chlorine Residual	µg/L	--	--	700	--	--	[2]
	lbs/day	--	--	130	--	--	[2]
Ammonia (as Nitrogen)	µg/L	--	--	210,000	39,200	--	39,500
	lbs/day	--	--	40,000			4,100
Chronic Toxicity[3]	TUc	--	--	88	--	--	44
Phenolic Compounds (non-	µg/L	--	--	11,000	--	--	2.7

Parameter	Units	Effluent Limitation			Monitoring Data (July 2005 – February 2010)		
		Average Monthly	Average Weekly	Maximum Daily	Highest Average Monthly Discharge	Highest Average Weekly Discharge	Highest Daily Discharge
chlorinated)[4]	lbs/day	--	--	2,000	--	--	0.23
Chlorinated Phenolics[5]	µg/L	--	--	350	--	--	0.86
	lbs/day	--	--	67	--	--	0.097
Endosulfan[6]	µg/L	--	--	1.6	--	--	0.005
	lbs/day	--	--	0.3	--	--	0.00040
HCH[7]	µg/L	--	--	0.7	--	--	0.0092
	lbs/day	--	--	0.13	--	--	0.00076
Tributyltin	µg/L	--	0.12	--	--	--	ND
	lbs/day	--	0.024	--	--	--	ND

ND – Not detected
NR – Not Reported
[1] Applied as an instantaneous maximum effluent limitation.
[2] The discharger does not utilize chlorine disinfection, therefore total chlorine residual was not measured in the effluent.
[3] Chronic toxicity expressed as Chronic Toxicity Units (TUc) = 100/NOEL, where NOEL (No Observed Effect Level) is expressed as the maximum percent effluent or receiving water that causes no observable effect on a test organism.
[4] Non-chlorinated phenolic compounds represent the sum of 2,4-dimethylphenol, 4,6-Dinitro-2-methylphenol, 2,4-dinitrophenol, 2-methylphenol, 4-methylphenol, 2-Nitrophenol, 4-nitrophenol, and phenol.
[5] Chlorinated phenolic compounds represent the sum of 4-chloro-3-methylphenol, 2-chlorophenol, pentachlorophenol, 2,4,5-trichlorophenol, and 2,4,6-trichlorophenol.
[6] Endosulfan represents the sum of alpha-endosulfan, beta-endosulfan, and endosulfan sulfate.
[7] HCH (hexachlorocyclohexane) represents the sum of the alpha, beta, gamma (Lindane), and delta isomers of hexachlorocyclohexane.

D. Compliance Summary

1. Inspections of the LSWTP were conducted on seven occasions between 2006 and 2010. Compliance issues noted by the inspectors were as follows:

a. On March 13, 2006, the final effluent composite sampler was not operating at the proper temperature for sample preservation. Additionally, the Facility flow meters had not been calibrated on an annual basis as required.

b. On March 16, 2007, the inspector found that records documenting the calibration of dissolved oxygen probes were not properly maintained. In addition, the composite sampler, which is used to obtain a representative sample of the LSWTP effluent, was turned off and inoperable.

c. On January 13, 2009, the inspector determined that flow meters had not been calibrated on an annual basis as required.

d. On December 14, 2009, 11 pH analyses were conducted beyond the required 15 minutes holding time after collection;

2. Inspections of the SLWRF were conducted on seven occasions between 2006 and 2010. Compliance issues noted by inspectors were as follows:

   a. On March 12, 2008, records documenting the installation and calibration of flow measurement devices were not properly maintained.

3. During the term of Order No. R9-2005-0136, six violations of deficient monitoring reports, one late report and one effluent violations.

   a. The daily maximum mass loading for ammonia was reported as 2.6E+06 lbs/day on October 3 2005. Order No. R9-2005-0136 Discharge Specifications and Effluent Limitations Section B.2, states that the daily maximum mass loading for ammonia shall not exceed 4.0E+4 lbs/day.

E. Planned Changes

The Discharger has a capital improvement program for the Facility designed to replace, renovate, or repair facilities and/or equipment that have outlived their useful lives or are not operating effectively or efficiently. At the OOO, the Discharger plans to undertake cleaning operations to remove sediment buildup from the interior of the diffuser and to replace a short metering section of pipe.

III. APPLICABLE PLANS, POLICIES, AND REGULATIONS

The requirements contained in the proposed Order are based on the requirements and authorities described in this section.

A. Legal Authorities

This Order is issued pursuant to section 402 of the federal Clean Water Act (CWA) and implementing regulations adopted by the United States Environmental Protection Agency (USEPA) and chapter 5.5, division 7 of the California Water Code (CWC) (commencing with section 13370). It shall serve as a NPDES permit for point source discharges from this facility to surface waters. This Order also serves as WDRs pursuant to article 4, chapter 4, division 7 of the CWC (commencing with section 13260).

B. California Environmental Quality Act (CEQA)

Under CWC section 13389, this action to adopt an NPDES permit is exempt from the provisions of CEQA, Public Resources Code sections 21100 through 21177.

C. State and Federal Regulations, Policies, and Plans

1. **Water Quality Control Plans.** The Regional Water Quality Control Board (San Diego Water Board) adopted a *Water Quality Control Plan for the San Diego Basin* (hereinafter Basin Plan) on September 8, 1994 that designates beneficial uses, establishes water quality objectives, and contains implementation programs and

policies to achieve those objectives. The Basin Plan was subsequently approved by the State Water Board on December 13, 1994. Subsequent revisions to the Basin Plan have also been adopted by the San Diego Water Board and approved by the State Water Board. The Basin Plan designates beneficial uses, establishes water quality objectives, and contains implementation programs and policies to achieve those objectives for all waters addressed through the plan.

Table F-6. Basin Plan Beneficial Uses

Discharge Point No.	Receiving Water Name	Beneficial Use(s)
001	Pacific Ocean	Industrial service supply; navigation; contact water recreation; non-contact water recreation; commercial and sport fishing; preservation of biological habitats of special significance; wildlife habitat; rare, threatened, or endangered species; marine habitat; aquaculture; migration of aquatic organisms; spawning, reproduction, and/or early development; and shellfish harvesting.

Requirements of this Order implement the Basin Plan.

2. **California Ocean Plan.** The State Water Board adopted the *Water Quality Control Plan for Ocean Waters of California, California Ocean Plan* (hereinafter Ocean Plan) in 1972 and amended it in 1978, 1983, 1988, 1990, 1997, 2000, and 2005. The State Water Board adopted the latest amendment on April 21, 2005 and it became effective on February 14, 2006. The Ocean Plan is applicable, in its entirety, to point source discharges to the ocean. The Ocean Plan identifies beneficial uses of ocean waters of the State to be protected as summarized below:

Table F-7. Ocean Plan Beneficial Uses

Discharge Point No.	Receiving Water	Beneficial Uses
001	Pacific Ocean	Industrial water supply; water contact and non-contact recreation, including aesthetic enjoyment; navigation; commercial and sport fishing; mariculture; preservation and enhancement of designated Areas of Special Biological Significance (ASBS); rare and endangered species; marine habitat; fish migration; fish spawning and shellfish harvesting.

In order to protect beneficial uses, the Ocean Plan establishes water quality objectives and a program of implementation. Requirements of this Order implement the Ocean Plan.

3. **Alaska Rule.** On March 30, 2000, USEPA revised its regulation that specifies when new and revised state and tribal water quality standards (WQS) become effective for CWA purposes (40 CFR 131.21, 65 Fed. Reg. 24641 (April 27, 2000)). Under the revised regulation (also known as the Alaska Rule), new and revised standards submitted to USEPA after May 30, 2000, must be approved by USEPA before being

used for CWA purposes. The final rule also provides that standards already in effect and submitted to USEPA by May 30, 2000, may be used for CWA purposes, whether or not approved by USEPA.

4. **Antidegradation Policy.** 40 CFR 131.12 requires that the State water quality standards include an antidegradation policy consistent with the federal policy. The State Water Board established California's antidegradation policy in State Water Board Resolution No. 68-16. Resolution No. 68-16 incorporates the federal antidegradation policy where the federal policy applies under federal law. Resolution No. 68-16 requires that existing water quality be maintained unless degradation is justified based on specific findings. The San Diego Water Board's Basin Plan implements, and incorporates by reference, both the State and federal antidegradation policies. The permitted discharge must be consistent with the antidegradation provision of 40 CFR 131.12 and State Water Board Resolution No. 68-16.

5. **Anti-Backsliding Requirements.** Sections 402(o)(2) and 303(d)(4) of the CWA and 40 CFR 122.44(l) prohibit backsliding in NPDES permits. These anti-backsliding provisions require that effluent limitations in a reissued permit must be as stringent as those in the previous permit, with some exceptions in which limitations may be relaxed.

D. Impaired Water Bodies on CWA 303(d) List

On June 28, 2007, USEPA approved the list of impaired water bodies, prepared by the State Water Board pursuant to section 303(d) of the CWA, which are not expected to meet applicable water quality standards after implementation of technology-based effluent limitations for point sources. The 303(d) list for waters in the vicinity of the OOO include:

1. 0.5 miles of the Pacific Ocean at the mouth of the San Luis Rey River for indicator bacteria;

2. 1.1 miles of the Pacific Ocean shoreline at the mouth of Loma Alta Creek for indicator bacteria;

3. 1.2 miles of the Pacific Ocean shoreline at Buena Vista Creek for indicator bacteria.

Impairment has been detected in the above waters. Some of the receiving water monitoring locations may be within the current 303(d) list. The San Diego Water Board will take into account the fact when determining compliance. An applicable Total Maximum Daily Limit has not been adopted for this discharge.

E. Other Plans, Policies and Regulations

1. **Secondary Treatment Regulations.** 40 CFR Part 133 establishes the minimum levels of effluent quality to be achieved by secondary treatment. These limitations,

established by the USEPA, are incorporated into this Order, except where more stringent limitations are required by other applicable plans, policies, or regulations.

2. **Storm Water.** Sewage treatment works with a design flow of 1.0 MGD or greater are required to comply with Water Quality Order No. 97-03-DWQ (NPDES General Permit No. CAS000001), WDRs for Dischargers of Storm Water Associated with Industrial Activity, Excluding Construction Activities. The Discharger is currently regulated under the General Permit.

IV. RATIONALE FOR EFFLUENT LIMITATIONS AND DISCHARGE SPECIFICATIONS

The CWA requires point source dischargers to control the amount of conventional, non-conventional, and toxic pollutants that are discharged into the waters of the United States. The control of pollutants discharged is established through effluent limitations and other requirements in NPDES permits. There are two principal bases for effluent limitations in the CFR: 40 CFR 122.44(a) requires that permits include applicable technology-based limitations and standards; and 40 CFR 122.44(d) requires that permits include water quality-based effluent limitations (WQBELs) to attain and maintain applicable numeric and narrative water quality criteria to protect the beneficial uses of the receiving water.

A. Discharge Prohibitions

This Order retains the discharge prohibitions from Order No. R9-2005-0136, as described below. Compliance determination language is included in section VII of this Order to accurately describe how violations of these prohibitions are determined. Discharges from the Facility to surface waters in violation of prohibitions contained in this Order are violations of the CWA and therefore are subject to third party lawsuits. Discharges from the Facility to land in violation of prohibitions contained in this Order are violations of the CWC and are not subject to third party lawsuits under the CWA because the CWC does not contain provisions allowing third party lawsuits.

1. Prohibitions III.A, III.B, III.C, and III.D of this Order are based on Order No. R9-2005-0136 to clearly define what types of discharges are prohibited.

2. This Order prohibits the discharge of wastes in excess of the design criteria for each of the facilities (including land outfalls). As such, Prohibitions III.E through III.G prohibit the discharge of wastes in excess of the individual design criteria for each facility and the design capacity their respective land outfall.

3. As discussed in section II.B of the Fact Sheet, the available capacity of the OOO has been revised. Prohibition III.G has been established to ensure the total flow to the OOO does not exceed the available capacity of the OOO.

4. CWC section 13243 provides that the San Diego Water Board, in a water quality control plan, may specify certain conditions where the discharge of wastes or certain types of wastes, or certain types of wastes that could affect the quality of waters in the State is prohibited. Order No. R9-2005-0136 included the Basin Plan and Ocean

Plan prohibitions as prohibitions. Consistent with Order No. R9-2005-0136, this Order requires compliance with the prohibitions from the Basin Plan and Ocean Plan; however, they are included in this Order as provisions in section VI.A.2 and incorporated in Attachment G of this Order.

Order No. R9-2005-0136 prohibited discharges of waste to Areas of Special Biological Significance and the discharge of sludge to the ocean. Because these prohibitions are expressly included in the Ocean Plan prohibitions, which are included in this Order as a provision in section VI.A.2 and incorporated in Attachment G of this Order, these requirements are not retained in the prohibitions of this Order.

B. Technology-Based Effluent Limitations

1. Scope and Authority

Section 301(b) of the CWA and implementing USEPA permit regulations at 40 CFR 122.44 require that permits include conditions meeting applicable technology-based requirements at a minimum, and any more stringent effluent limitations necessary to meet applicable water quality standards. Discharges authorized by this Order must meet minimum federal technology-based requirements based on Secondary Treatment Standards at 40 CFR Part 133. Discharges must also meet technology-based effluent limitations (TBELs) based on Ocean Plan Table A.

Regulations promulgated in 40 CFR 125.3(a)(1) require technology-based effluent limitations for municipal Dischargers to be placed in NPDES permits based on Secondary Treatment Standards or Equivalent to Secondary Treatment Standards.

The Federal Water Pollution Control Act Amendments of 1972 (PL 92-500) established the minimum performance requirements for POTWs [defined in 40 CFR 304(d)(1)]. Section 301(b)(1)(B) of that Act requires that such treatment works must, as a minimum, meet effluent limitations based on secondary treatment as defined by the USEPA Administrator.

Based on this statutory requirement, USEPA developed secondary treatment regulations, which are specified in 40 CFR Part 133. These technology-based regulations apply to all municipal wastewater treatment plants and identify the minimum level of effluent quality attainable by secondary treatment in terms of biochemical oxygen demand (BOD_5), TSS, and pH.

2. Applicable Technology-Based Effluent Limitations

a. Federal Regulations. 40 CFR Part 133 establishes the minimum weekly and monthly average level of effluent quality attainable by secondary treatment for BOD_5 and TSS. 40 CFR 133.102(a)(4) allows for effluent limitations for carbonaceous biological oxygen demand ($CBOD_5$) to be applied in lieu of effluent

limitations for BOD_5 where BOD_5 may not provide a reliable measure of the oxygen demand of the effluent. USEPA has determined that a 30-day average effluent limitation of 25 mg/L and a 7-day average effluent limitation of 40 mg/L are effectively equivalent to the secondary treatment standards for BOD_5.

b. 40 CFR 133.102, in describing the minimum level of effluent quality attainable by secondary treatment, states that the 30-day average percent removal of BOD_5 and TSS shall not be less than 85 percent. This Order contains a limitation requiring an average of 85 percent removal of $CBOD_5$ and TSS over each calendar month.

The secondary treatment regulations at 40 CFR Part 133 also require that pH be maintained between 6.0 and 9.0 standard units.

These technology-based effluent limitations are applicable to each of the POTWs prior to the commingling of their respective effluents with any other wastewater. Thus, compliance with these effluent limitations must be determined at internal outfall locations upstream of the location where these wastewaters commingle with other wastewaters.

Technology-based effluent limitations based on secondary treatment standards for $CBOD_5$, TSS, and pH are summarized in the following table.

Table F-8. Summary of Technology-Based Effluent Limitations Based on Secondary Treatment Standards

Parameter	Units	Effluent Limitations				
		Average Monthly	Average Weekly	Maximum Daily	Instantaneous Minimum	Instantaneous Maximum
$CBOD_5$	mg/L	25	40	--	--	--
	% Removal	85	--	--	--	--
TSS	mg/L	30	45	--	--	--
	% Removal	85	--	--	--	--
pH	standard units	--	--	--	6.0	9.0

c. Ocean Plan. The Ocean Plan is applicable, in its entirety, to point source discharges to the ocean. Therefore, the discharge of wastewater to the Pacific Ocean at Discharge Point No. 001 is subject to the Ocean Plan.

The Ocean Plan establishes water quality objectives, general requirements for management of waste discharged to the ocean, effluent quality requirements for waste discharges, discharge prohibitions, and general provisions. Further, Table A of the Ocean Plan establishes technology-based effluent limitations for POTWs and industrial discharges for which effluent limitation guidelines have not been established (including the discharge of brine from MBDF). Order No. R9-2005-

0136 established numeric effluent limitations based on Table A of the Ocean Plan at Discharge Point No. 001 (M-004, previously M-003). Because the Table A effluent limitations are technology-based, the San Diego Water Board finds that the Table A effluent limitations are applicable to each individual contributing facility (SLRWRF, LSWTP, and MBDF), and the Discharger shall be responsible for achieving compliance with the effluent limitations prior to the contributing wastewaters commingling.

Because secondary treatment standards contain effluent limitations for TSS that are more stringent than Table A of the Ocean Plan, the more stringent effluent limitations for TSS will be applied to discharges from SLRWRF and LSWTP.

Table A of the Ocean Plan requires dischargers to, as a monthly average, achieve a percent removal of 75 percent for suspended solids from the influent stream before discharging wastewater to the Pacific Ocean, except that the effluent limitation to be met shall not be less than 60 mg/L. Because MBDF is not a POTW, an effluent limitation of 60 mg/L is more appropriate and has been established for the MBDF effluent. The technology-based effluent limitations from the Ocean Plan are summarized below:

Table F-9. Summary of Technology-Based Effluent Limitations Based on Table A of the Ocean Plan

Parameter	Units	Effluent Limitations				
		Average Monthly	Average Weekly	Maximum Daily	Instantaneous Minimum	Instantaneous Maximum
Oil and Grease	mg/L	25	40	--	--	75
TSS	mg/L	60[1]	--	--	--	--
Settleable Solids	mL/L	1.0	1.5	--	--	3.0
Turbidity	NTU	75	100	--	--	225
pH	standard units	--	--	--	6.0	9.0

[1] Applicable only to the discharge of brine from MBDF.

C. Water Quality-Based Effluent Limitations (WQBELs)

1. Scope and Authority

Section 301(b) of the CWA and 40 CFR 122.44(d) require that permits include limitations more stringent than applicable federal technology-based requirements where necessary to achieve applicable water quality standards.

40 CFR 122.44(d)(1)(i) mandates that permits include effluent limitations for all pollutants that are or may be discharged at levels that have reasonable potential to cause or contribute to an exceedance of a water quality standard, including numeric and narrative objectives within a standard. Where reasonable potential has been established for a pollutant, but there is no numeric criterion or objective for the

pollutant, WQBELs must be established using: (1) USEPA criteria guidance under CWA section 304(a), supplemented where necessary by other relevant information; (2) an indicator parameter for the pollutant of concern; or (3) a calculated numeric water quality criterion, such as a proposed state criterion or policy interpreting the state's narrative criterion, supplemented with other relevant information, as provided in 40 CFR 122.44(d)(1)(vi).

The process for determining reasonable potential and calculating WQBELs when necessary is intended to protect the designated uses of the receiving water as specified in the Basin Plan and Ocean Plan, and achieve applicable water quality objectives and criteria that are contained in the Ocean Plan.

2. Applicable Beneficial Uses and Water Quality Criteria and Objectives

The Basin Plan and Ocean Plan designate beneficial uses, establishes water quality objectives, and contain implementation programs and policies to achieve those objectives for all waters.

a. Basin Plan. The beneficial uses specified in the Basin Plan applicable to the Pacific Ocean are summarized in section III.C.1 of this Fact Sheet. The Basin Plan includes water quality objectives for pH applicable to the receiving water.

The Basin Plan states, "*The terms and conditions of the State Board's "Water Quality Control Plan for Ocean Waters of California" (Ocean Plan), "Water Quality Control Plan for Control of Temperature in the Coastal and Interstate Waters and Enclosed Bays and Estuaries of California" (Thermal Plan), and any revisions thereto are incorporated into this Basin Plan by reference. The terms and conditions of the Ocean Plan and Thermal Plan apply to the ocean waters within this Region.*"

b. Ocean Plan. The beneficial uses specified in the Ocean Plan for the Pacific Ocean are summarized in section III.C.2 of this Fact Sheet. The Ocean Plan also includes water quality objectives for the ocean receiving water for bacterial characteristics, physical characteristics, chemical characteristics, biological characteristics, and radioactivity.

Table B of the Ocean Plan includes the following water quality objectives for toxic pollutants and whole effluent toxicity:

i. 6-month median, daily maximum, and instantaneous maximum objectives for 21 chemicals and chemical characteristics, including total residual chlorine and chronic toxicity, for the protection of marine aquatic life.

ii. 30-day average objectives for 20 non-carcinogenic chemicals for the protection of human health.

iii. 30-day average objectives for 42 carcinogenic chemicals for the protection of human health.

iv. Daily maximum objectives for acute and chronic toxicity.

3. Determining the need for WQBELs

Order No. R9-2005-0136 contained effluent limitations for non-conventional and toxic pollutant parameters in Table B of the California Ocean Plan. For this Order, the need for effluent limitations based on water quality objectives in Table B of the Ocean Plan was re-evaluated in accordance with 40 CFR 122.44(d) and guidance for statistically determining the "reasonable potential" for a discharged pollutant to exceed an objective, as outlined in the revised *Technical Support Document for Water Quality-based Toxics Control* (TSD; EPA/505/2-90-001, 1991) and the Ocean Plan Reasonable Potential Analysis (RPA) Amendment that was adopted by the State Water Board on April 21, 2005. The statistical approach combines knowledge of effluent variability (as estimated by a coefficient of variation) with the uncertainty due to a limited amount of effluent data to estimate a maximum effluent value at a high level of confidence. This estimated maximum effluent value is based on a lognormal distribution of daily effluent values. Projected receiving water values (based on the estimated maximum effluent value or the reported maximum effluent value and minimum probable initial dilution) can then be compared to the appropriate objective to determine potential for an exceedance of that objective and the need for an effluent limitation. According to the Ocean Plan amendment, the RPA can yield three endpoints: 1) Endpoint 1, an effluent limitation is required and monitoring is required; 2) Endpoint 2, an effluent limitation is not required and the San Diego Water Board may require monitoring; 3) Endpoint 3, the RPA is inconclusive, monitoring is required, and an existing effluent limitation may be retained or a permit reopener clause may be included to allow inclusion of an effluent limitation if future monitoring warrants the inclusion. Endpoint 3 is typically the result when there are fewer than 16 data points and all are censored data (i.e., below quantitation or method detection levels for an analytical procedure).

The implementation provisions for Table B in section III.C of the Ocean Plan specify that the minimum initial dilution is the lowest average initial dilution within any single month of the year. Dilution estimates are to be based on observed waste flow characteristics, observed receiving water density structure, and the assumption that no currents of sufficient strength to influence the initial dilution process flow across the discharge structure. Before establishing a dilution credit for a discharge, it must first be determined if, and how much, receiving water is available to dilute the discharge. Prior to issuance of Order No. R9-2005-0136, the State Water Board had determined the minimum initial dilution factor (Dm), for the OOO to be 87 to 1. This determination was based on flow from the Facility and additional discharges from USMC Camp Pendleton, Fallbrook PUD, and Genentech, yielding a total flow rate of 29.055 MGD. No additions or modifications to the Facility or the OOO have been proposed that would alter the previously determined dilution characteristics. Further, the newly reduced capacity of the OOO is expected to result in more available

dilution. Therefore, the previous Dm of 87 to 1 will be retained in the current Order and applied to WQBELs established herein.

Conventional pollutants were not considered as part of the RPA. Technology-based effluent limitations for these pollutants are included in this Order as described in section IV.B of this Fact Sheet.

Using the RPcalc 2.0 software tool developed by the State Water Board for conducting reasonable potential analyses, the San Diego Water Board has conducted the RPA for the constituents in Table F-10. For parameters without reasonable potential a narrative limit statement to comply with all Ocean Plan objectives requirements is provided. This Order includes desirable maximum effluent concentrations for constituents that do not have reasonable potential which were derived using effluent limitation determination procedure described above and are referred to in this Order as "performance goals". The Discharger is required to monitor for these constituents as stated in the MRP (Attachment E of this Order) to gather data for use in reasonable potential analyses for future permit renewals.

Effluent data provided in the Discharger's monitoring reports for the Facility from May 2005 through February 2010 were used in the RPA. A minimum probable initial dilution of 87 to 1 was considered in this evaluation.

A summary of the RPA results is provided below:

Table F-10. RPA Results Summary

Parameter	Units	n[1]	MEC[2,4]	Most Stringent Criteria	Background	RPA Endpoint[3]
Arsenic	µg/L	20	0.005	8[5]	3[6]	2
Cadmium	µg/L	20	<0.002	1[5]	0	2
Chromium (VI)	µg/L	20	2.1	2[5]	0	2
Copper	µg/L	20	4.4	3[5]	2[6]	2
Lead	µg/L	20	5.8	2[5]	0	2
Mercury	µg/L	20	<0.3	0.04[5]	0.0005[6]	2
Nickel	µg/L	20	0.027	5[5]	0	2
Selenium	µg/L	20	9.9	15[5]	0	2
Silver	µg/L	20	4	0.7[5]	0.16[6]	2
Zinc	µg/L	20	36	20[5]	8[6]	2
Cyanide	µg/L	21	40	1[5]	0	2
Total Residual Chlorine[7]	µg/L	--	--	2[5]	0	--
Ammonia	µg/L	75	39,500	600[5]	0	2
Acute Toxicity	TUa	16	2	0.3[8]	0	2
Chronic Toxicity[9]	TUc	21	44.4	1[8]	0	2
Phenolic Compounds[10]	µg/L	33	2.7	30[5]	0	2
Chlorinated Phenolics[11]	µg/L	27	1.17	1[5]	0	2
Endosulfan[12]	µg/L	22	0.005	0.009[5]	0	2
Endrin	µg/L	22	0.03	0.002[5]	0	2
HCH[13]	µg/L	22	0.0092	0.004[5]	0	2
Radioactivity	pCi/L	18	--	[14]	0	2
Acrolein	µg/L	11	<5.7	220[15]	0	3
Antimony	µg/L	17	<0.007	1,200[15]	0	2

Parameter	Units	n[1]	MEC[2,4]	Most Stringent Criteria	Background	RPA Endpoint[3]
Bis(2-chloroethoxyl)methane	µg/L	11	<0.4	4.4[15]	0	3
Bis(2-chloroisopropyl)ether	µg/L	11	<0.4	1,200[15]	0	3
Chlorobenzene	µg/L	11	<0.36	570[15]	0	3
Chromium (III)[16]	µg/L	--	--	190,000[15]	0	--
Di-n-butyl phthalate	µg/L	12	0.44	3,500[15]	0	3
Dichlorobenzenes[17]	µg/L	11	<0.35	5,100[15]	0	3
Diethyl phthalate	µg/L	12	0.86	33,000[15]	0	2
Dimethyl phthalate	µg/L	12	0.39	820,000[15]	0	2
4,6-Dinitro-2-methylphenol	µg/L	32	<0.4	220[15]	0	2
2,4-Dinitrophenol	µg/L	33	2.7	4.0[15]	0	2
Ethylbenzene	µg/L	11	<0.25	4,100[15]	0	3
Fluoranthene	µg/L	11	<0.52	15[15]	0	3
Hexachlorocyclopentadiene	µg/L	11	<0.4	58[15]	0	2
Nitrobenzene	µg/L	11	0.16	4.9[15]	0	3
Thallium	µg/L	17	8.7	2[15]	0	2
Toluene	µg/L	11	<0.36	85,000[15]	0	3
Tributyltin	µg/L	12	<0.004	0.0014[15]	0	3
1,1,1-Trichloroethane	µg/L	11	<0.3	540,000[15]	0	2
Acrylonitrile	µg/L	11	<3.1	0.10[15]	0	3
Aldrin	µg/L	11	<0.011	0.000022[15]	0	3
Benzene	µg/L	11	<0.28	5.9[15]	0	3
Benzidine	µg/L	11	<44	0.000069[15]	0	3
Beryllium	µg/L	17	<0.3	0.033[15]	0	2
Bis(2-chloroethyl) ether	µg/L	11	<0.4	0.045[15]	0	3
Bis(2-ethylhexyl) phthalate	µg/L	11	2.3	3.5[15]	0	3
Carbon tetrachloride	µg/L	11	<0.28	0.90[15]	0	2
Chlordane	µg/L	11	<0.1	0.000023[15]	0	3
Chlorodibromomethane	µg/L	11	0.33	8.6[15]	0	3
Chloroform	µg/L	11	2.2	130[15]	0	2
DDT[18]	µg/L	12	0.026	0.00017[15]	0	3
1,4-Dichlorobenzene	µg/L	11	<0.66	18[15]	0	3
3,3-Dichlorobenzidine	µg/L	11	<4.8	0.0081[15]	0	3
1,2-Dichloroethane	µg/L	11	<0.28	28[15]	0	3
1,1-Dichloroethylene	µg/L	11	<0.42	0.9[15]	0	3
Dichlorobromomethane	µg/L	11	<0.3	6.2[15]	0	3
Dichloromethane	µg/L	11	1.3	450[15]	0	2
1,3-Dichloropropene	µg/L	11	<0.32	8.9[15]	0	3
Dieldrin	µg/L	11	<0.012	0.00004[15]	0	3
2,4-Dinitrotoluene	µg/L	11	<0.21	2.6[15]	0	3
1,2-Diphenylhydrazine	µg/L	11	0.25	0.16[15]	0	3
Halomethanes[19]	µg/L	11	<0.54	130[15]	0	3
Heptachlor	µg/L	11	<0.008	0.00005[15]	0	3
Heptachlor Epoxide	µg/L	11	<0.01	0.00002[15]	0	3
Hexachlorobenzene	µg/L	11	<0.4	0.00021[15]	0	3
Hexachlorobutadiene	µg/L	11	<0.4	14[15]	0	3
Hexachloroethane	µg/L	11	<0.4	2.5[15]	0	3
Isophorone	µg/L	11	0.13	730[15]	0	3
N-nitrosodimethylamine	µg/L	11	<2.1	7.3[15]	0	3
N-nitrosodi-N-propylamine	µg/L	10	<0.5	0.38[15]	0	3
N-nitrosodiphenylamine	µg/L	11	<0.4	2.5[15]	0	3
PAHs[20]	µg/L	11	0.48	0.0088[15]	0	3

Parameter	Units	n[1]	MEC[2,4]	Most Stringent Criteria	Background	RPA Endpoint[3]
PCBs[21]	µg/L	12	<0.47	0.000019[15]	0	3
TCDD equivalents[22]	pg/L	11	0.0026	0.0000039[15]	0	1
1,1,2,2-Tetrachoroethane	µg/L	11	<0.3	2.3[15]	0	2
Tetrachloroethylene	µg/L	11	<0.32	2.0[15]	0	3
Toxaphene	µg/L	10	<3.13	0.00021[15]	0	3
Trichloroethylene	µg/L	11	<0.26	27[15]	0	3
1,1,2-Trichloroethane	µg/L	11	<0.30	9.4[15]	0	3
2,4,6-Trichlorophenol	µg/L	33	0.86	0.29[15]	0	2
Vinyl Chloride	µg/L	11	<0.4	36[15]	0	2

Parameter	Units	n[1]	MEC[2,4]	Most Stringent Criteria	Background	RPA Endpoint[3]

[1] Number of data points available for the RPA.
[2] If there is a detected value, the highest reported value is summarized in the table. If there are no detected values, the lowest MDL is summarized in the table.
[3] End Point 1 – RP determined, limit required, monitoring required.
End Point 2 – Discharger determined not to have RP, monitoring may be established.
End Point 3 – RPA was inconclusive, carry over previous limits if applicable, and establish monitoring.
[4] Note that the reported MEC does not account for dilution. The RPA does account for dilution; therefore it is possible for a parameter with an MEC in exceedance of the most stringent criteria not to present a RP (i.e. Endpoint 1).
[5] Based on the 6-Month Median in the Table B of the Ocean Plan.
[6] Background concentrations contained in Table C of the Ocean Plan.
[7] The discharger does not utilize chorine disinfection, therefore does not monitor effluent chorine residual.
[8] Based on the Daily Maximum in Table B of the Ocean Plan.
[9] Chronic toxicity expressed as Chronic Toxicity Units (TUc) = 100/NOEL, where NOEL (No Observed Effect Level) is express as the maximum percent effluent of receiving water that causes no observable effect on a test organism.
[10] Non-chlorinated phenolic compounds represent the sum of 2,4-dimethylphenol, 4,6-Dinitro-2-methylphenol, 2,3-dinitrophenol, 2-methylphenol, 4-methylphenol, 2-nitropheneol, 4-nitrophenol, and phenol.
[11] Chlorinated phenolic compounds represent the sum of 4-chloro-3-methylphenol, 2-chlorophenol, pentachlorophenol, 2,4,5-trichlorophenol, and 2,4,6-trichlorophenol.
[12] Endosulfan represents the sum of alpha-endosulfan, beta-endosulfan, and endosulfan sulfate.
[13] HCH (hexachlorocyclohexane) represents the sum of the alpha, beta, gamma (Lindane), and delta isomers of hexachlorocyclohexane.
[14] Not to exceed limits specified in Title 17, Division 1, Chapter 5, Subchapter 4, Group 3, Article 3, Section 30253 of the California Code of Regulations. Radioactivity at levels that exceed the applicable criteria are not expected in the discharge.
[15] Based on 30-Day Average in Table B of the Ocean Plan.
[16] Chromium data was reported as Total Chromium and is summarized under Chromium (VI).
[17] Dichlorobenzenes represent the sum of 1,2- and 1,3-dichlorobenzene.
[18] DDT represents the sum of 4,4'DDT; 2,4'DDT; 4,4'DDE; 2,4'DDE; 4,4'DDD; and 2,4'DDD.
[19] Halomethanes represent the sum of bromoform, bromomethane (methyl bromide), and chloromethane (methyl chloride).
[20] PAHs (polynuclear aromatic hydrocarbons) represent the sum of acenapthalene; anthracene; 1,2-benzanthracene; 3,4-benzofluoranthene; benzo[k]fluoranthene; 1,12-benzoperylene; benzo[a]pyrene; chrysene; dibenzo[a,h]anthracene; fluorene; indeno[1,2,3-cd]pyrene; phenanthrene; and pyrene.
[21] PCBs (polychlorinated biphenyls) represent the sum of chlorinated biphenyls whose analytical characteristics resemble those of Aroclor-1016, Aroclor-1221, Aroclor-1232, Aroclor-1242, Aroclor-1248, Arolclor-1254, and Arcolor-1260.
[22] TCDD equivalents represent the sum of concentrations of chlorinated dibenzodioxins (2,3,7,8-CDDs) and chlorinated dibenzofurans (2,3,7,8-CDFs) multiplied by their respective toxicity factors, as shown by the table below. USEPA Method 8280 may be used to analyze TCDD equivalents.

Isomer Group	Toxicity Equivalence Factor
2,3,7,8 – tetra CDD	1.0
2,3,7,8 – penta CDD	0.5
2,3,7,8 – hexa CDD	0.1
2,3,7,8 – hepta CDD	0.01
octa CDD	0.001
2,3,7,8 – tetra CDF	0.1
1,2,3,7,8 – penta CDF	0.05
2,3,4,7,8 – penta CDF	0.5
2,3,7,8 – hexa CDFs	0.1
2,3,7,8 – hepta CDFs	0.01
Octa CDF	0.001

Consistent with 40 CFR 122.44(l)(2)(i)(B), effluent limitations from Order No. R9-2005-0136 are not retained for constituents for which the RPA results indicated Endpoint 2. Instead performance goals have been assigned for these constituents. Parameters for which Endpoint 2 was concluded are determined not to have reasonable potential, thus it is inappropriate to establish or retain effluent limitations for these parameters.

For parameters for which Endpoint 3 was concluded, the reasonable potential analysis was inconclusive. For parameters for which Endpoint 3 was concluded and previous effluent limitations had not been established, reasonable potential was not determined. For parameters for which new data is available, and the reasonable potential analysis results are inconclusive, effluent limitations have been retained. Reasonable potential to cause or contribute to an exceedance of water quality objectives was inconclusive for tributyltin. Since the previous Order established an effluent limitation for tributyltin and reasonable potential analysis was inconclusive (i.e. Endpoint 3), the effluent limitation shall be retained in the current Order.

Reasonable potential to cause or contribute to an exceedance of water quality objectives contained within the Ocean Plan (i.e. Endpoint 1) was determined for TCDD equivalents, thus effluent limitations for TCDD equivalents have been established in this Order based on the initial dilution of 87 to 1, as discussed below.

The monitoring and reporting program (MRP) in Attachment E of this Order is designed to obtain additional information for these constituents to determine if reasonable potential exists for these constituents in future permit renewals and/or updates.

4. WQBEL Calculations

a. From the Table B water quality objectives of the Ocean Plan, effluent limitations and performance goals are calculated according to the following equation for all pollutants, except for acute toxicity (if applicable) and radioactivity:

$$Ce = Co + Dm\ (Co - Cs)$$ where,

Ce = the effluent limitation (µg/L)
Co = the water quality objective to be met at the completion of initial dilution (µg/L)
Cs = background seawater concentration
Dm = minimum probable initial dilution expressed as parts seawater per part wastewater

b. Initial dilution (Dm) has been determined to be 87 to 1 by the San Diego Water Board through the application of USEPA's dilution model, Visual Plumes.

c. Table C of the Ocean Plan establishes background concentrations for some pollutants to be used when determining reasonable potential (represented as "Cs"). In accordance with Table B implementing procedures, Cs equals zero for all pollutants not established in Table C. The background concentrations provided in Table C are summarized below:

Table F-11. Pollutants Having Background Concentrations

Pollutant	Background Seawater Concentration
Arsenic	3 µg/L
Copper	2 µg/L
Mercury	0.0005 µg/L
Silver	0.16 µg/L
Zinc	8 µg/L

d. As an example of how effluent limitations and performance goals have been calculated, the performance goals for cyanide are determined as follows:

Water quality objectives from the Ocean Plan for cyanide are:

Table F-12. Example Parameter Water Quality Objectives

Parameter	Units	6-Month Median	Daily Maximum	Instantaneous Maximum
Cyanide	µg/L	1	4	10

Using the equation, Ce = Co + Dm (Co – Cs), effluent limitations/performance goals are calculated as follows.

<u>Cyanide</u>

Ce = 1 + 87 (1 – 0) = 88 (6-Month Median)
Ce = 4 + 87 (4 – 0) = 352 (Daily Maximum)
Ce = 10 + 87 (10 – 0) = 880 (Instantaneous Maximum)

Based on the implementing procedures described above, effluent limitations and performance goals have been calculated for all Table B pollutants from the Ocean Plan and incorporated into this Order.

e. 40 CFR 122.45(f)(1) requires effluent limitations be expressed in terms of mass, with some exceptions, and 40 CFR 122.45(f)(2) allows pollutants that are limited in terms of mass to additionally be limited in terms of other units of measurement. This Order includes effluent limitations expressed in terms of mass and concentration. In addition, pursuant to the exceptions to mass limitations provided in 40 CFR 122.45(f)(1), some effluent limitations are not expressed in terms of mass, such as pH and temperature, and when the applicable standards are expressed in terms of concentration (e.g., CTR criteria and MCLs) and mass limitations are not necessary to protect the beneficial uses of the receiving water.

Mass-based effluent limitations were calculated using the following equation:

lbs/day = permitted flow (MGD) x pollutant concentration (mg/L) x 8.34

f. A summary of the WQBELs established in this Order are provided below:

Table F-13. Summary of Water Quality-based Effluent Limitations – Discharge Point No. 001

Parameter	Units	Effluent Limitations			
		6-Month Median	Maximum Daily	Instantaneous Maximum	30-Day Average
BASED ON OBJECTIVES FOR PROTECTION OF MARINE AQUATIC LIFE					
Tributyltin	µg/L	--	--	--	1.2E-01
	lbs/day[1]	--	--	--	2.3E-02
	lbs/day[2]				2.3E-02
	lbs/day[3]	--	--	--	2.4E-02
	lbs/day[4]				2.4E-02
TCDD Equivalents[5]	µg/L	--	--	--	3.4E-07
	lbs/day[1]	--	--	--	6.5E-08
	lbs/day[2]				6.6E-08
	lbs/day[3]	--	--	--	6.6E-08
	lbs/day[4]				6.9E-08

[1] Applicable when Combined Effluent flow to the OOO is prohibited from exceeding 22.6 MGD.
[2] Applicable when Combined Effluent flow to the OOO is prohibited from exceeding 23.1 MGD.
[3] Applicable when Combined Effluent flow to the OOO is prohibited from exceeding 23.4 MGD.
[4] Applicable when Combined Effluent flow to the OOO is prohibited from exceeding 24.4 MGD.
[5] TCDD equivalents represent the sum of concentrations of chlorinated dibenzodioxins (2,3,7,8-CDDs) and chlorinated dibenzofurans (2,3,7,8-CDFs) multiplied by their respective toxicity factors.

g. A summary of the performance goals is provided in Table F-15 of this Fact Sheet.

5. Whole Effluent Toxicity (WET)

a. Implementing provisions at section III.C.4.c.(4) of the Ocean Plan require chronic toxicity monitoring for ocean waste discharges with minimum initial dilution factors that fall below 100:1 at the edge of the mixing zone. Using quarterly chronic WET testing conducted between January 2005 and November 2006 to conduct the RPA resulted in Endpoint 2, and an effluent limitation for chronic toxicity is not required. However, consistent with Order No. R9-2005-0136, this Order contains a performance goal and quarterly monitoring for chronic toxicity. Monitoring for chronic toxicity has been reduced from quarterly to semiannually. Based on the methods established by the Ocean Plan, a maximum daily performance goal of 88 TUc is established in this Order.

b. Implementing provisions at section III.C.4.c.(3) of the Ocean Plan states that the San Diego Water Board may require acute toxicity testing in addition to chronic toxicity monitoring for ocean waste discharges with minimum initial dilution factors ranging from 100:1 to 350:1 as necessary for the protection of beneficial uses of ocean waters. The OOO has been granted a dilution ratio of 87:1 and

the results of the RPA do not indicate reasonable potential for acute toxicity, thus monitoring for acute toxicity is not necessary and has been discontinued.

D. Final Effluent Limitations

1. Final Effluent Limitations

The following tables list the effluent limitations established by this Order. Where this Order establishes mass emission limitations, these limitations have been derived based on a flow of 13.5 MGD (and 15.4 MGD, based on the available capacity of the land outfall to the OOO) for SLRWRF to the OOO through the land outfall; 5.5 MGD for LSWTP; and 2.0 MGD for MBDF. Mass emission limitations for the combined flow have been based on the potential available capacity conditions of the OOO.

Table F-14.a. Technology Based Effluent Limitations for SLRWRF at M-001

Parameter	Units	Effluent Limitations					
		Average Monthly	Average Weekly	Maximum Daily	Instantaneous Minimum	Instantaneous Maximum	6-Month Median
Carbonaceous Biochemical Oxygen Demand (5-day @ 20°C)[1]	mg/L	25	40	--	--	--	--
	lbs/day[2]	2,814	4,504	--	--	--	--
	lbs/day[3]	3,211	5,137	--	--	--	
Total Suspended Solids[1]	mg/L	30	45	--	--	--	--
	lbs/day[2]	3,378	5,067	--	--	--	--
	lbs/day[3]	3,853	5,780	--	--	--	
Oil and Grease	mg/L	25	40	--	--	75	--
	lbs/day[2]	2,814	4,504	--	--	8,445	--
	lbs/day[3]	3,211	5,137	--	--	9,633	
Settleable Solids	ml/L	1.0	1.5	--	--	3.0	--
Turbidity	NTU	75	100	--	--	225	--
pH	standard units	--	--	--	6.0	9.0	--

[1] The average monthly percent removal of $CBOD_5$ and TSS shall not be less than 85 percent.
[2] Applicable when the average monthly permitted flow is prohibited from exceeding 13.5 MGD.
[3] Applicable when the average monthly permitted flow is prohibited from exceeding 15.4 MGD.

Table F-14.b. Technology Based Effluent Limitations for LSWTP at M-002

Parameter	Units	Effluent Limitations					
		Average Monthly	Average Weekly	Maximum Daily	Instantaneous Minimum	Instantaneous Maximum	6-Month Median
Carbonaceous Biochemical Oxygen Demand (5-day @ 20°C)	mg/L	25	40	--	--	--	--
	lbs/day	1,147	1,835	--	--	--	--
Total Suspended Solids	mg/L	30	45	--	--	--	--
	lbs/day	1,376	2,064	--	--	--	--
Oil and Grease	mg/L	25	40	--	--	75	--
	lbs/day	1,147	1,835	--	--	3,440	--
Settleable Solids	ml/L	1.0	1.5	--	--	3.0	--
Turbidity	NTU	75	100	--	--	225	--
pH	standard units	--	--	--	6.0	9.0	--

[1] The average monthly percent removal of $CBOD_5$ and TSS shall not be less than 85 percent.

Table F-14.c. Technology Based Effluent Limitations for MBDF Based on Table A of the Ocean Plan at M-003

Parameter	Units	Effluent Limitations			
		Average Monthly	Average Weekly	Instantaneous Maximum	Instantaneous Maximum
Oil and Grease	mg/L	25	40	--	75
	lbs/day	417	667		1,251
Total Suspended Solids	mg/L	--	--	--	60
	lbs/day	--	--	--	1,001
Settleable Solids	ml/L	1.0	1.5	--	3.0
Turbidity	NTU	75	100	--	225
pH	standard units	--	--	6.0	9.0

Table F-14.d. Effluent Limitations for Combined Flow Based on Table B of the Ocean Plan at M-004 (previously M-003)

Parameter	Units	Effluent Limitations[1]			
		6-Month Median	Maximum Daily	Instantaneous Maximum	30-Day Average
BASED ON OBJECTIVES FOR PROTECTION OF MARINE AQUATIC LIFE					
Tributyltin	µg/L	--	--	--	1.2E-01
	lbs/day[2]	--	--	--	2.3E-02
	lbs/day[3]				2.3E-02

	lbs/day[4]	--	--	--	2.4E-02
	lbs/day[5]				2.4E-02
TCDD Equivalents[6]	µg/L	--	--	--	3.4E-07
	lbs/day[2]	--	--	--	6.5E-08
	lbs/day[3]				6.6E-08
	lbs/day[4]	--	--	--	6.6E-08
	lbs/day[5]				6.9E-08

[1] Scientific "E" notation is used to express effluent limitations. In scientific "E" notation, the number following the "E" indicates that position of the decimal point in the value. Negative numbers after the "E" indicate that the value is less than 1, and positive numbers after the "E" indicate that the value is greater than 1. In this notation a value of 6.1E-02 represents 6.1×10^{-2} or 0.061, 6.1E+02 represents 6.1×10^{2} or 610, and 6.1E+00 represents 6.1×10^{0} or 6.1.

[2] Applicable when Combined Effluent flow to the OOO is prohibited from exceeding 22.6 MGD.

[3] Applicable when Combined Effluent flow to the OOO is prohibited from exceeding 23.1 MGD.

[4] Applicable when Combined Effluent flow to the OOO is prohibited from exceeding 23.4 MGD.

[5] Applicable when Combined Effluent flow to the OOO is prohibited from exceeding 24.4 MGD.

[6] TCDD equivalents represent the sum of concentrations of chlorinated dibenzodioxins (2,3,7,8-CDDs) and chlorinated dibenzofurans (2,3,7,8-CDFs) multiplied by their respective toxicity factors.

2. Satisfaction of Anti-Backsliding Requirements

The technology based effluent limitations in this Order are at least as stringent as the effluent limitations in the previous Order.

Effluent limitations from Order No. R9-2005-0136 are not retained for constituents for which RPA results indicated Endpoint 2, or Endpoint 3 when previous effluent limitations had not been established; instead performance goals have been assigned for these constituents. Parameters for which Endpoint 2 was concluded are determined not to have reasonable potential, thus it is inappropriate to establish effluent limitations for these parameters. For parameters for which Endpoint 3 was concluded and previous effluent limitations had not been established, reasonable potential was not determined. For parameters for which new data is available, and a reasonable potential analysis determined that reasonable potential does not exist, effluent limitations have been removed as allowed under 40 CFR 122(l)(2)(i)(B), and performance goals have been established in their place. The MRP for this Order is designed to obtain additional information for these constituents to determine if reasonable potential exists for these constituents in future permit renewals and/or updates.

This permit complies with all applicable federal and State anti-backsliding regulations.

3. Satisfaction of Antidegradation Policy

WDRs for the Discharger must conform with federal and State antidegradation policies provided at 40 CFR 131.12 and in State Water Board Resolution No. 68-16, *Statement of Policy with Respect to Maintaining High Quality of Waters in California*. The antidegradation policies require that beneficial uses and the water quality

necessary to maintain those beneficial uses in the receiving waters of the discharge shall be maintained and protected, and, if existing water quality is better than the quality required to maintain beneficial uses, the existing water quality shall be maintained and protected unless allowing a lowering of water quality is necessary to accommodate important economic and social development or consistent with maximum benefit to the people of California. When a significant lowering of water quality is allowed by the San Diego Water Board, an antidegradation analysis is required in accordance with the State Water Board's Administrative Procedures Update (July 2, 1990), *Antidegradation Policy Implementation for NPDES Permitting*.

a. Technology-based Effluent Limitations

The technology-based effluent limitations are at least as stringent as the previous effluent limitations, and no degradation of the receiving water is expected.

b. Water Quality-based Effluent Limitations

The WQBELs contained in this Order have been modified from previous NPDES permits for the Discharger, including Order No. R9-2005-0136, to remove effluent limitations for some parameters after an RPA was conducted. In accordance with the State Water Board's Administrative Procedures Update (APU) No. 90-004, the San Diego Water Board assessed the potential impact of the modified effluent limitations on existing water quality and the need for an antidegradation analysis.

Effluent limitations were not included in this Order for constituents which reasonable potential to exceed the water quality objectives was not indicated following an RPA although the previous permit included effluent limitations for those constituents. The procedures for conducting the RPA are explained in section IV.C.3 of this Fact Sheet. For constituents for which effluent limitations were not included, performance goals were included which will indicate the level of discharge at which possible water quality impacts may be significant. The removal of effluent limitations by itself is not expected to cause a change in the physical nature of the effluent discharged and is not expected to impact beneficial uses nor cause a reduction of the water quality of the receiving water. Coupled with the inclusion of performance goals and retention of the monitoring program for constituents without effluent limitations, the existing water quality is expected to be maintained. For these reasons, the San Diego Water Board has determined that an antidegradation analysis is not required to consider the possible impacts resulting from the removal of effluent limitations following a RPA.

4. Stringency of Requirements for Individual Pollutants

This Order contains both technology-based effluent limitations and WQBELs for individual pollutants. The technology-based effluent limitations consist of restrictions on $CBOD_5$, TSS, oil and grease, settleable solids, turbidity, and pH. Restrictions on

these constituents are discussed in section IV.B of this Fact Sheet. This Order's technology-based pollutant restrictions implement the minimum, applicable federal technology-based requirements. These limitations are not more stringent than required by the CWA.

WQBELs have been scientifically derived to implement water quality objectives that protect beneficial uses. Both the beneficial uses and the water quality objectives have been approved pursuant to federal law and are the applicable federal water quality standards. The scientific procedures for calculating the individual WQBELs are based on the Ocean Plan, which was approved by USEPA on February 14, 2006. All beneficial uses and water quality objectives contained in the Basin Plan were approved under State law and submitted to and approved by USEPA prior to May 30, 2000. Any water quality objectives and beneficial uses submitted to USEPA prior to May 30, 2000, but not approved by USEPA before that date, are nonetheless "applicable water quality standards for purposes of the CWA" pursuant to 40 CFR 131.21(c)(1). Collectively, this Order's restrictions on individual pollutants are no more stringent than required to implement the requirements of the CWA.

E. Performance Goals

Constituents that do not have reasonable potential are listed as performance goals in this Order. Performance goals serve to maintain existing treatment levels and effluent quality and supports State and federal antidegradation policies. Additionally, performance goals provide all interested parties with information regarding the expected levels of pollutants in the discharge that should not be exceeded in order to maintain the water quality objectives established in the Ocean Plan. Performance goals are not limitations or standards for the regulation of the discharge. Effluent concentrations above the performance goals will not be considered as violations of the permit but serve as red flags that indicate water quality concerns. Repeated red flags may prompt the San Diego Water Board to reopen and amend the permit to replace performance goals for constituents of concern with effluent limitations, or the San Diego Water Board may coordinate such actions with the next permit renewal.

The following table lists the performance goals established by this Order. A minimum probable initial dilution factor of 87:1 was used in establishing the performance goals.

Table F-15. Performance Goals Based on the Ocean Plan

Parameter	Unit	Performance Goals[1]			
		6-Month Median	Maximum Daily	Instantaneous Maximum	30-Day Average
OBJECTIVES FOR PROTECTION OF MARINE AQUATIC LIFE					

Parameter	Unit	Performance Goals[1]			
		6-Month Median	Maximum Daily	Instantaneous Maximum	30-Day Average
Arsenic, Total Recoverable	µg/L	4.4E+02	2.6E+03	6.8E+03	--
Cadmium, Total Recoverable	µg/L	8.8E+01	3.5E+02	8.8E+02	--
Chromium VI, Total Recoverable[4]	µg/L	1.8E+02	7.0E+02	1.8E+03	--
Copper, Total Recoverable	µg/L	9.0E+01	8.8E+02	2.5E+03	--
Lead, Total Recoverable	µg/L	1.8E+02	7.0E+02	1.8E+03	--
Mercury, Total Recoverable	µg/L	3.5E+00	1.4E+01	3.5E+01	--
Nickel, Total Recoverable	µg/L	4.4E+02	1.8E+03	4.4E+03	--
Selenium, Total Recoverable	µg/L	1.3E+03	5.3E+03	1.3E+04	--
Silver, Total Recoverable	µg/L	4.8E+01	2.3E+02	6.0E+02	--
Zinc, Total Recoverable	µg/L	1.1E+03	6.3E+03	1.7E+04	--
Cyanide, Total (as CN)[2]	µg/L	8.8E+01	3.5E+02	8.8E+02	--
Chlorine, Total Residual[3]	µg/L	1.8E+02	7.0E+02	5.3E+03	--
Ammonia (expressed as nitrogen)	µg/L	5.3E+04	2.1E+05	5.3E+05	--
Acute Toxicity	TUa	--	2.6E+01	--	--
Chronic Toxicity[5]	TUc	--	8.8E+01	--	--
Phenolic Compounds (non-chlorinated)[6]	µg/L	2.6E+03	1.1E+04	2.6E+04	--
Chlorinated Phenolics[7]	µg/L	8.8E+01	3.5E+02	8.8E+02	--
Endosulfan[8]	µg/L	7.9E-01	1.6E+00	2.4E+00	--
Endrin	µg/L	1.8E-01	3.5E-01	5.3E-01	--
HCH[9]	µg/L	3.5E-01	7.0E-01	1.1E+00	--
Radioactivity	pCi/L	Not to exceed limits specified in Title 17, Division 1, Chapter 5, Subchapter 4, Group 3, Article 3, Section 30253 of the California Code of Regulations, Reference to Section 30253 is prospective, including future changes to any incorporated provisions of federal law, as the changes take effect.			

Parameter	Unit	Performance Goals[1]			
		6-Month Median	Maximum Daily	Instantaneous Maximum	30-Day Average
OBJECTIVES FOR PROTECTION OF HUMAN HEALTH – NONCARCINOGENS					
Acrolein	µg/L	--	--	--	1.9E+04
Antimony	µg/L	--	--	--	1.1E+05
Bis(2-chloroethoxy) Methane	µg/L	--	--	--	3.9E+02
Bis(2-chloroisopropyl) Ether	µg/L	--	--	--	1.1E+05
Chlorobenzene	µg/L	--	--	--	5.0E+04
Chromium (III), Total Recoverable	µg/L	--	--	--	1.7E+07
Di-n-butyl Phthalate	µg/L	--	--	--	3.1E+05
Dichlorobenzenes[10]	µg/L	--	--	--	4.5E+05
Diethyl Phthalate	µg/L	--	--	--	2.9E+06
Dimethyl Phthalate	µg/L	--	--	--	7.2E+07
4,6-dinitro-2-methylphenol	µg/L	--	--	--	1.9E+04
2,4-dinitrophenol	µg/L	--	--	--	3.5E+02
Ethylbenzene	µg/L	--	--	--	3.6E+05
Fluoranthene	µg/L	--	--	--	1.3E+03
Hexachlorocyclopentadiene	µg/L	--	--	--	5.1E+03
Nitrobenzene	µg/L	--	--	--	4.3E+02
Thallium, Total Recoverable	µg/L	--	--	--	1.8E+02
Toluene	µg/L	--	--	--	7.5E+06
1,1,1-trichloroethane	µg/L	--	--	--	4.8E+07
OBJECTIVES FOR PROTECTION OF HUMAN HEALTH – CARCINOGENS					
Acrylonitrile	µg/L	--	--	--	8.8E+00
Aldrin	µg/L	--	--	--	1.9E-03
Benzene	µg/L	--	--	--	5.2E+02
Benzidine	µg/L	--	--	--	6.1E-03
Beryllium	µg/L	--	--	--	2.9E+00
Bis(2-chloroethyl) Ether	µg/L	--	--	--	4.0E+00
Bis(2-ethlyhexyl) Phthalate	µg/L	--	--	--	3.1E+02
Carbon Tetrachloride	µg/L	--	--	--	7.9E+01
Chlorodane[11]	µg/L	--	--	--	2.0E-03
Chlorodibromomethane	µg/L	--	--	--	7.6E+02
Chloroform	µg/L	--	--	--	1.1E+04
DDT[12]	µg/L	--	--	--	1.5E-02
1,4-dichlorobenzene	µg/L	--	--	--	1.6E+03
3,3'-dichlorobenzidine	µg/L	--	--	--	7.1E-01
1,2-dichloroethane	µg/L	--	--	--	2.5E+03
1,1-dichloroethylene	µg/L	--	--	--	7.9E+01

Parameter	Unit	Performance Goals[1]			
		6-Month Median	Maximum Daily	Instantaneous Maximum	30-Day Average
Dichlorobromomethane	µg/L	--	--	--	5.5E+02
Dichloromethane	µg/L	--	--	--	4.0E+04
1,3-dichloropropene	µg/L	--	--	--	7.8E+02
Dieldrin	µg/L	--	--	--	3.5E-03
2,4-dinitrotoluene	µg/L	--	--	--	2.3E+02
1,2-diphenylhydrazine	µg/L	--	--	--	1.4E+01
Halomethanes[13]	µg/L	--	--	--	1.1E+04
Heptachlor	µg/L	--	--	--	4.4E-03
Heptachlor Epoxide	µg/L	--	--	--	1.8E-03
Hexachlorobenzene	µg/L	--	--	--	1.8E-02
Hexachlorobutadiene	µg/L	--	--	--	1.2E+03
Hexachloroethane	µg/L	--	--	--	2.2E+02
Isophorone	µg/L	--	--	--	6.4E+04
N-nitrosodimethylamine	µg/L	--	--	--	6.4E+02
N-nitrosodi-N-propylamine	µg/L	--	--	--	3.3E+01
N-nitrosodiphenylamine	µg/L	--	--	--	2.2E+02
PAHs[14]	µg/L	--	--	--	7.7E-01
PCBs[15]	µg/L	--	--	--	1.7E-03
1,1,2,2-tetrachloroethane	µg/L	--	--	--	2.0E+02
Tetrachloroethylene	µg/L	--	--	--	1.8E+02
Toxaphene	µg/L	--	--	--	1.8E-02
Trichloroethylene	µg/L	--	--	--	2.4E+03
1,1,2-trichloroethane	µg/L	--	--	--	8.3E+02
2,4,6-trichlorophenol	µg/L	--	--	--	2.6E+01
Vinyl Chloride	µg/L	--	--	--	3.2E+03

Parameter	Unit	Performance Goals[1]			
		6-Month Median	Maximum Daily	Instantaneous Maximum	30-Day Average

[1] Scientific "E" notation is used to express certain values. In scientific "E" notation, the number following the "E" indicates that position of the decimal point in the value. Negative numbers after the "E" indicate that the value is less than 1, and positive numbers after the "E" indicate that the value is greater than 1. In this notation a value of 6.1E-02 represents 6.1×10^{-2} or 0.061, 6.1E+02 represents 6.1×10^{2} or 610, and 6.1E+00 represents 6.1×10^{0} or 6.1.

[2] If the Discharger can demonstrate to the satisfaction of the San Diego Water Board (subject to USEPA approval) that an analytical method is available to reliably distinguish between strongly and weakly complexed cyanide, performance goals may be evaluated with the combined measurement of free cyanide, simple alkali metals cyanides, and weakly complexed organometallic cyanide complexes. In order for the analytical method to be acceptable, the recovery of free cyanide from metal complexes must be comparable to that achieved by the approved method in 40 CFR Part 136, as revised May 14, 1999.

[3] The water quality objectives for total chlorine residual applicable to intermittent discharges not exceeding two hours, shall be determined through the use of the following equation:

log y =0.43 (log x) + 1.8,
where y =the water quality objective (in ug/l) to apply when chlorine is being discharged;
x =the duration of uninterrupted chlorine discharge in minutes.

Actual effluent limitations for total chlorine, when discharging intermittently, shall then be determined according to Implementation Procedures for Table B from the Ocean Plan, using a minimum probable initial dilution factor of 87 and the applicable flow rate.

[4] Dischargers may, at their option, apply this performance goal as a total chromium performance goal.

[5] Chronic toxicity expressed as Chronic Toxicity Units (TUc) = 100/NOEL, where NOEL (No Observed Effect Level) is expressed as the maximum percent effluent or receiving water that causes no observable effect on a test organism.

[6] Non-chlorinated phenolic compounds represent the sum of 2,4-dimethylphenol, 4,6-Dinitro-2-methylphenol, 2,4-dinitrophenol, 2-methylphenol, 4-methylphenol, 2-Nitrophenol, 4-nitrophenol, and phenol.

[7] Chlorinated phenolic compounds represent the sum of 4-chloro-3-methylphenol, 2-chlorophenol, pentachlorophenol, 2,4,5-trichlorophenol, and 2,4,6-trichlorophenol.

[8] Endosulfan represents the sum of alpha-endosulfan, beta-endosulfan, and endosulfan sulfate.

[9] HCH (hexachlorocyclohexane) represents the sum of the alpha, beta, gamma (Lindane), and delta isomers of hexachlorocyclohexane.

[10] Dichlorobenzenes represent the sum of 1,2- and 1,3-dichlorobenzene.

[11] Chlordane shall mean the sum of chlordane-alpha, chlordane-gamma, chlordane-alpha, chlordane-gamma, nonachlor-alpha, nonachlor-gamma, and oxychlordane.

[12] DDT represents the sum of 4,4'DDT; 2,4'DDT; 4,4'DDE; 2,4'DDE; 4,4'DDD; and 2,4'DDD.

[13] Halomethanes represent the sum of bromoform, bromomethane (methyl bromide), and chloromethane (methyl chloride).

[14] PAHs (polynuclear aromatic hydrocarbons) represent the sum of acenapthalene; anthracene; 1,2-benzanthracene; 3,4-benzofluoranthene; benzo[k]fluoranthene; 1,12-benzoperylene; benzo[a]pyrene; chrysene; dibenzo[a,h]anthracene; fluorene; indeno[1,2,3-cd]pyrene; phenanthrene; and pyrene.

[15] PCBs (polychlorinated biphenyls) represent the sum of chlorinated biphenyls whose analytical characteristics resemble those of Aroclor-1016, Aroclor-1221, Aroclor-1232, Aroclor-1242, Aroclor-1248, Arolclor-1254, and Arcolor-1260.

F. Interim Effluent Limitations

G. Land Discharge Specifications – Not Applicable

H. Reclamation Specifications

The Discharger shall continue to comply with reclamation requirements established in San Diego Water Board Order No. 93-07 and any applicable future revised or renewal waste discharge requirements.

V. RATIONALE FOR RECEIVING WATER LIMITATIONS

Receiving water limitations of this Order are derived from the water quality objectives for ocean waters established by the Basin Plan and the Ocean Plan.

The water contact bacterial standards in the previous Order No. R9-2005-0136, which were based on the language in the 2001 Ocean Plan, have changed. The language in the 2005 Ocean Plan now specifies that the Water-Contact Standards apply to ocean waters within California's jurisdiction designated by the San Diego Water Board as having REC-1 beneficial uses. Because the San Diego Water Board has not completed a process to designate specific areas where the water-contact standards apply, Ocean Plan Bacterial Standards apply throughout all ocean waters in the San Diego Region. Thus, the applicable standards are included in this Order. See section VII.B.7 of this Fact Sheet for additional information on compliance with the 2005 Ocean Plan bacterial standards.

VI. RATIONALE FOR MONITORING AND REPORTING REQUIREMENTS

40 CFR 122.48 requires that all NPDES permits specify requirements for recording and reporting monitoring results. CWC sections 13267 and 13383 authorize the San Diego Water Board to require technical and monitoring reports. The MRP (Attachment E of this Order), establishes monitoring and reporting requirements to implement federal and State requirements. The following provides the rationale for the monitoring and reporting requirements contained in the MRP for this Facility.

A. Influent Monitoring

Influent monitoring is required to determine the effectiveness of the source control program, to assess the performance of treatment facilities, and to evaluate compliance with effluent limitations. Influent monitoring frequencies and sample types for flow, $CBOD_5$, and TSS have been retained from Order No. R9-2005-0136. Refer to section III.A of Attachment E of this Order for a summary of influent monitoring requirements.

B. Effluent Monitoring

Effluent monitoring is required to determine compliance with the permit conditions and to identify operational problems and improve plant performance. Effluent monitoring also provides information on wastewater characteristics and flows for use in interpreting

water quality and biological data. Effluent monitoring requirements for most of the parameters have been retained from Order No. R9-2005-0136. Effluent monitoring for tributyltin and TCDD equivalents have been increased from semiannually to quarterly based on the results of the RPA and to determine compliance with the newly established effluent limitations.

Effluent monitoring for Combined Effluent discharged through the OOO has been added to determine compliance with the flow prohibitions contained within section III of the Order.

C. Whole Effluent Toxicity Testing Requirements

As described in section IV.C.5 of this Fact Sheet, quarterly chronic WET testing is required by this Order to evaluate compliance with Table B water quality objective and evaluate any potential synergistic effects in the effluent.

D. Receiving Water Monitoring

1. Surface Water

a. Microbiological (Near Shore and Off Shore)

The near shore and off shore water quality sampling program is designed to help evaluate the fate of the wastewater plume under various conditions and to determine if the Ocean Plan standards are being negatively impacted by the discharge. Further, bacterial sampling is required to provide data to help track the wastewater plume in the offshore waters, to evaluate compliance with recreational water standards in the kelp beds, and to address issues of beach water quality at the shoreline stations. Monitoring requirements for total coliform organisms, fecal coliform organisms, and enteroccoccus bacteria have been established in this Order, consistent with Order No. R9-2005-0136.

b. Benthic Monitoring

Sediment and infauna monitoring is required to help evaluate the potential effects of the discharge on the physical and chemical properties of the sediment and biological communities in the vicinity of the discharge, consistent with Order No. R9-2005-0136.

c. Fish and Invertebrate

Fish and invertebrate monitoring is required to assess the effects of the discharge on local fish and megabenthic invertebrate communities in the surrounding area of the discharge location, consistent with Order No. R9-2005-0136.

E. Other Monitoring Requirements

1. **Kelp Bed Monitoring.** Kelp bed monitoring is intended to assess the extent to which the discharge of wastes may affect the aerial extent and health of coastal kelp beds. The aerial extent of the various kelp beds photographed in each survey will provide a baseline for future monitoring to help evaluate any significant and persistent losses to the kelp beds.

2. **Regional Monitoring.** The Discharger is required to participate in regional monitoring activities coordinated by the Southern California Coastal Water Project (SCCWRP). The procedures for Executive Officer and USEPA approval shall be the same as detailed above for the strategic process studies. The intent of regional monitoring activities is to maximize the efforts of all monitoring partners using a more cost-effective monitoring design and to best utilize the pooled scientific resources of the region. During these coordinated sampling efforts, the Discharger's sampling and analytical effort may be reallocated to provide a regional assessment of the impact of the discharge of municipal wastewater to the Southern California Bight. Anticipated modifications to the monitoring program will be coordinated so as to provide a more comprehensive picture of the ecological and statistical significance of monitoring results and to determine cumulative impacts of various pollution sources.

3. **Solids Monitoring.** The Discharger is required to monitor solids generated at the Facility pursuant to 40 CFR Part 503. The Discharger shall report, annually, the volume of screenings, sludges, grit, and other solids generated and/or removed during wastewater treatment and the locations where these waste materials are placed for disposal.

VII. RATIONALE FOR PROVISIONS

A. Standard Provisions

Standard Provisions, which apply to all NPDES permits in accordance with 40 CFR 122.41, and additional conditions applicable to specified categories of permits in accordance with 40 CFR 122.42, are provided in Attachment D to the Order.

40 CFR 122.41(a)(1) and (b) through (n) establish conditions that apply to all State-issued NPDES permits. These conditions must be incorporated into the permits either expressly or by reference. If incorporated by reference, a specific citation to the regulations must be included in the Order. 40 CFR 123.25(a)(12) allows the State to omit or modify conditions to impose more stringent requirements. In accordance with 40 CFR 123.25, this Order omits federal conditions that address enforcement authority specified in 40 CFR 122.41(j)(5) and (k)(2) because the enforcement authority under the CWC is more stringent. In lieu of these conditions, this Order incorporates by reference CWC section 13387(e).

B. Special Provisions

1. Reopener Provisions

This Order may be re-opened and modified, revoked, and reissued or terminated in accordance with the provisions of 40 CFR Parts 122, 123, 124, and 125. The San Diego Water Board may reopen the permit to modify permit conditions and requirements [including, but not limited to, increased/ modified receiving water requirements and participation in the Southern California Coastal Water Research Project (SCCWRP) model monitoring program]. Causes for modifications include the promulgation of new regulations, modification in sludge use or disposal practices, or adoption of new regulations by the State Water Board or San Diego Water Board, including revisions to the Basin Plan.

2. Special Studies and Additional Monitoring Requirements

a. Spill Prevention and Response Plans

The CWA largely prohibits any discharge of pollutants from point sources to waters of the United States except as authorized under an NPDES permit. In general, any point source discharge of sewage effluent to waters of the United States must comply with technology-based, secondary treatment standards, at a minimum, and any more stringent requirements necessary to meet applicable water quality standards and other requirements. The unpermitted discharge of wastewater to waters of the United States is illegal under the CWA. Further, the Basin Plan prohibitions discharges of waste to land, except as authorized by WDRs of the terms described in CWC section 13264. The Basin Plan also prohibits the unauthorized discharge of treated or untreated sewage to waters of the State or to a storm water conveyance system. Further, Discharge Prohibition III.A of the Order prohibits the discharge of waste from the Facility not treated by secondary treatment process and not in compliance with the effluent limitations of the Order and/or to a location other than Discharge Point No. 001.

Sanitary collection and treatment systems experience periodic failures resulting in discharges that may affect waters of the State. There are many factors which may affect the likelihood of a spill. To ensure appropriate funding, management and planning to reduce the likelihood of a spill, and increase the spill preparedness, this Order requires the Discharger to maintain and implement Spill Prevention and Response Plans.

b. Spill Reporting Requirements.

To determine compliance with Discharge Prohibition III.A and provide appropriate notification to the general public for the protection of public health, spill reporting requirements have been established in section VI.C.2.b of this Order.

c. Whole Effluent Toxicity (WET)

Implementing provisions at section III.C.4.c.(4) of the Ocean Plan require chronic toxicity monitoring for ocean waste discharges with minimum initial dilution of less than 100:1. Based on methods of the Ocean Plan, a maximum daily performance goal of 88 TUc is established in this Order. Monitoring for chronic toxicity has been established from quarterly to semiannually.

As described further in section IV.C.5.b of this Fact Sheet, this Order does not require acute toxicity testing.

This Order requires the Discharger to develop a Toxicity Reduction Evaluation (TRE) workplan, and submit the TRE workplan within 180 days of the effective date of this Order. The workplan shall describe steps the Discharger intends to follow if the performance goal for chronic toxicity (88 TUc) is exceeded.

If the performance goal for chronic toxicity is exceeded in any one test, then within 15 days of the exceedance, the Discharger shall begin conducting six additional tests, bi-weekly, over a 12 week period. If the toxicity performance goal is exceeded in any of these six additional tests, then the Discharger shall notify the Executive Officer and Director. If the Executive Officer and Director determine that the discharge consistently exceeds a toxicity performance goal, then the Discharger shall initiate a TRE/TIE in accordance with the TRE workplan, *Toxicity Reduction Evaluation Guidance for Municipal Wastewater Treatment Plants* (USEPA 833-B-99-002, 1999), and USEPA Toxicity Identification Evaluation (TIE) guidance documents (Phase I, EPA/600/6-91/005F, 1992; Phase II, EPA/600/R-92/080, 1993; and Phase III, EPA/600/R-92/081, 1993). Once the source of toxicity is identified, the Discharger shall take all reasonable steps to reduce the toxicity to meet the chronic toxicity performance goal identified in section IV.A.2 of this Order.

Within 30 days of completion of the TRE/TIE, the Discharger shall submit the results of the TRE/TIE, including a summary of the findings, data generated, a list of corrective actions necessary to achieve consistent compliance with all the toxicity limitations/performance goals of this Order and prevent recurrence of exceedances of those limitations/performance goals, and a time schedule for implementation of such corrective actions. The corrective actions and time schedule shall be modified at the direction of the Executive Officer.

If no toxicity is detected in any of these additional six tests, then the Discharger may return to the testing frequency specified in the MRP.

3. Best Management Practices and Pollution Prevention – Not Applicable

4. Construction, Operation, and Maintenance Specifications – Not Applicable

5. Special Provisions for Wastewater Facilities

a. Oceanside Ocean Outfall Capacity

i. As discussed in section II.B of this Fact Sheet, the capacity of the OOO has been determined to be significantly less than previously reported by the Discharger. The capacity of the OOO has been reduced from 30 MGD to 22.6 MGD. The Discharger reported that a portion of that capacity, up to 23.1 MGD, 23.4 MGD, and 24.4 MGD could be regained through the cleaning of the OOO, the replacement of a portion of the OOO, or the combination of cleaning and replacing a portion of the OOO. This Order allows the Discharger to increase the permitted Combined Effluent discharge to the OOO if the Discharger can demonstrate that the capacity is available.

ii. As discussed in section II.B of this Fact Sheet, the discharge of effluent flow from SLRWRF through the land outfall to the OOO is limited based on the design capacity of the land outfall to the OOO. This Order limits the effluent discharged through the land outfall to the OOO to 13.5 MGD until the Discharger can demonstrate to the San Diego Water Board that the capacity of the land outfall to the OOO has been increased to the Discharger's requested flow value of 15.4 MGD (treatment capacity of the SLRWRF).

iii. This Order requires the Discharger to annually report on the status of the capacity of the OOO, and provided documentation to demonstrate that the Discharger can and will continue to achieve compliance with the flow limitations contained in section III of the Order.

iv. Prior to the expiration of this Order, this Order requires the Discharger to produce a final report regarding the capacity of the OOO to ensure that sufficient capacity is available to accommodate potential growth and any anticipated wastewaters in the future and submit their findings to the San Diego Water Board.

b. Treatment Plant Capacity

Consistent with Order No. R9-2005-0136, this Order requires the Discharger to perform a treatment plant capacity study to serve as an indicator for the San Diego Water Board of the Facility's increasing hydraulic capacity and growth in the service area.

The Discharger shall submit a written report to the Executive Officer within 90 days after the monthly average influent flow rate equals or exceeds 75 percent of the secondary treatment design capacity of the wastewater treatment and/or

disposal facilities. The Discharger's senior administrative officer shall sign a letter in accordance with Standard Provision V.B. (Attachment D of this Order) which transmits that report and certifies that that policy-making body is adequately informed of the influent flow rate relative to the Facility's design capacity. The report shall include the following:

- Average influent daily flow for the calendar month, the date on which the maximum daily flow occurred, and the rate of that maximum flow.
- The Discharger's best estimate of when the average daily influent flow for a calendar month will equal or exceed the design capacity of the facilities.
- The Discharger's intended schedule for studies, design, and other steps needed to provide additional treatment for the wastewater from the collection system and/or control the flow rate before the waste flow exceeds the capacity of present units.

c. Pretreatment Program

The federal CWA section 307(b), and federal regulations, 40 CFR Part 403, require POTWs to develop an acceptable industrial pretreatment program. A pretreatment program is required to prevent the introduction of pollutants, which will interfere with treatment plant operations or sludge disposal, and prevent pass through of pollutants that exceed water quality objectives, standards, or permit limitations. Pretreatment requirements are imposed pursuant to 40 CFR Part 403.

The Discharger shall implement and enforce its approved pretreatment program and is an enforceable condition of this Order. If the Discharger fails to perform the pretreatment functions, the San Diego Water Board, the State Water Board, or USEPA may take enforcement actions against the Discharger as authorized by the CWA.

d. Biosolids

The use and disposal of biosolids is regulated under federal and State laws and regulations, including permitting requirements and technical standards included in 40 CFR Part 503. The Discharger is required to comply with the standards and time schedules contained in 40 CFR Part 503.

Title 27, CCR, Division 2, Subdivision 1, section 20005 establishes approved methods for the disposal of collected screenings, residual sludge, biosolids, and other solids removed from liquid wastes. Requirements to ensure the Discharger disposes of solids in compliance with State and federal regulations have been included in this Order.

e. Collection System

The State Water Board issued General Waste Discharge Requirements for Sanitary Sewer Systems, Water Quality Order No. 2006-0003-DWQ (General Order) on May 2, 2006. The General Order requires public agencies that own or operate sanitary sewer systems with greater than 1 mile of pipes or sewer lines to enroll for coverage under the General Order. The General Order requires agencies to develop sanitary sewer management plans (SSMPs) and report all sanitary sewer overflows (SSOs), among other requirements and prohibitions.

Furthermore, the General Order contains requirements for operation and maintenance of collection systems and for reporting and mitigating SSOs. Public agencies that are discharging wastewater into the Facility were required to obtain enrollment for regulation under the General Order by December 1, 2006.

6. Other Special Provisions – Not Applicable

7. Compliance Schedules

Prior to this Order, the San Diego Water Board has interpreted the Bacterial Characteristics Water-contact Standards of the Ocean Plan (Receiving Water Limitations section V.A.1) to apply only in the zone bounded by the shoreline and a distance 1,000 feet from the shoreline or the 30-foot depth contour, whichever is further from the shoreline, and within kelp beds. The Ocean Plan also has language that these standards also apply in areas outside this zone used for water contact sports, as determined by the Regional Board (i.e., waters designated as REC-1). These designations would need to be specified in the Basin Plan. Because the San Diego Water Board has not completed a process to designate specific areas where the water-contact standards apply, Ocean Plan Bacterial Standards apply throughout all ocean waters in the San Diego Region. This interpretation has been confirmed by the USEPA.

In order to ensure that the Discharger is not causing, or contributing to, excursions of the Bacterial Characteristics Water-contact Standards contained in the Ocean Plan, this Order requires the discharge to comply with a time schedule to ensure compliance with the standards.

The time schedule requires the discharger to: 1) prepare and submit a proposed work plan that outlines the tasks and the approach to be used in evaluating and selecting alternatives for ensuring compliance with Bacterial Characteristics receiving water limitation; 2) submit a plan and alternatives analysis; 3) complete financial arrangements for the selected alternative; 4) initiate construction of any required facilities; 5) complete construction of required facilities and initiate facilities start-up; 6) identify and implement operational refinements and confirm compliance with Bacterial Characteristics receiving water limitations; and 7) achieve full compliance with Bacterial Characteristics receiving water limitations outside the Initial Dilution Zone of the Oceanside Ocean Outfall. Final compliance with the standards is to be achieved no later than 60 months of the adoption date of this Order, unless modified by the San Diego Water Board. The Discharger is also required to implement the plan identified in Task 2 in accordance with the shortest practicable time required to complete each task, but in no case later than the Compliance Dates listed in the schedule.

VIII. PUBLIC PARTICIPATION

The San Diego Water Board is considering the issuance of WDRs that will serve as an NPDES permit for the Facility. As a step in the WDR adoption process, the San Diego Water Board staff has developed tentative WDRs. The San Diego Water Board encourages public participation in the WDR adoption process.

A. Notification of Interested Parties

The San Diego Water Board has notified the Discharger and interested agencies and persons of its intent to prescribe WDRs for the discharge and has provided them with an opportunity to submit their written comments and recommendations. Notification was published in the San Diego Union-Tribune on November 5, 2010 and posted on the San Diego Water Board web site on November 5, 2010.

B. Written Comments

The staff determinations are tentative. Interested persons are invited to submit written comments concerning these tentative WDRs. Comments must be submitted either in person or by mail to the Executive Office at the San Diego Water Board at the address above on the cover page of this Order.

To be fully responded to by staff and considered by the San Diego Water Board, written comments must be received at the San Diego Water Board offices by 5:00 p.m. on December 6, 2010.

C. Public Hearing

The San Diego Water Board will hold a public hearing on the tentative WDRs during its regular board meeting on the following date and time and at the following location:

Date: January 12, 2011
Time: 9:00 AM
Location: Regional Water Quality Control Board
Regional Board Meeting Room
9174 Sky Park Court, Suite 100
San Diego, CA 92123

Interested persons are invited to attend. At the public hearing, the San Diego Water Board will hear testimony, if any, pertinent to the discharge, WDRs, and permit. Oral testimony will be heard; however, for accuracy of the record, important testimony should be in writing.

Please be aware that dates and venues may change. Our Web address is http://www.swrcb.ca.gov/rwqcb9 where you can access the current agenda for changes in dates and locations.

D. Waste Discharge Requirements Petitions

Any aggrieved person may petition the State Water Resources Control Board to review the decision of the San Diego Water Board regarding the final WDRs. The petition must be submitted within 30 days of the San Diego Water Board's action to the following address:

State Water Resources Control Board
Office of Chief Counsel
P.O. Box 100, 1001 I Street
Sacramento, CA 95812-0100

E. Information and Copying

The Report of Waste Discharge (RWD), related documents, tentative effluent limitations and special provisions, comments received, and other information are on file and may be inspected at the address above at any time between 8:30 a.m. and 4:45 p.m., Monday through Friday. Copying of documents may be arranged through the San Diego Water Board by calling (858) 467-2952.

F. Register of Interested Persons

Any person interested in being placed on the mailing list for information regarding the WDRs and NPDES permit should contact the San Diego Water Board, reference this facility, and provide a name, address, and phone number.

G. Additional Information

Requests for additional information or questions regarding this Order should be directed to Ms. Joann Cofrancesco at (858) 637-5589 or via email at jcofrancesco@waterboards.ca.gov .

ATTACHMENT G – DISCHARGE PROHIBITIONS CONTAINED IN THE 2005 CALIFORNIA OCEAN PLAN AND BASIN PLAN

I. Ocean Plan Discharge Prohibitions

1. The Discharge of any radiological chemical, or biological warfare agent or high-level radioactive waste into the ocean is prohibited.

2. Waste shall not be discharged to designated Areas of Special Biological Significance except as provided in Chapter III.E. of the Ocean Plan.

3. Pipeline discharge of sludge to the ocean is prohibited by federal law; the discharge of municipal and industrial waste sludge directly to the ocean, or into a waste stream that discharges to the ocean, is prohibited. The discharge of sludge digester supernatant directly to the ocean, or to a waste stream that discharges to the ocean without further treatment, is prohibited.

4. The by-passing of untreated wastes containing concentrations of pollutants in excess of those of Table A or Table B [of the Ocean Plan] is prohibited.

II. Basin Plan Discharge Prohibitions

1. The discharge of waste to waters of the State in a manner causing, or threatening to cause a condition of pollution, contamination or nuisance as defined in CWC section 13050, is prohibited.

2. The discharge of waste to land, except as authorized by WDRs of the terms described in CWC section 13264 is prohibited.

3. The discharge of pollutants or dredged or fill material to waters of the United States except as authorized by an NPDES permit or a dredged or fill material permit (subject to the exemption described in CWC section 13376) is prohibited.

4. Discharges of recycled water to lakes or reservoirs used for municipal water supply or to inland surface water tributaries thereto are prohibited, unless this San Diego Water Board issues an NPDES permit authorizing such a discharge; the proposed discharge has been approved by the State of California Department of Public Health and the operating agency of the impacted reservoir; and the discharger has an approved fail-safe long-term disposal alternative.

5. The discharge of waste to inland surface waters, except in cases where the quality of the discharge complies with applicable receiving water quality objectives, is prohibited. Allowances for dilution may be made at the discretion of the San Diego Water Board. Consideration would include streamflow data, the degree of treatment provided and safety measures to ensure reliability of facility performance. As an example, discharge of

secondary effluent would probably be permitted if streamflow provided 100:1 dilution capability.

6. The discharge of waste in a manner causing flow, ponding, or surfacing on lands not owned or under the control of the discharger is prohibited, unless the discharge is authorized by the San Diego Water Board.

7. The dumping, deposition, or discharge of waste directly into waters of the State, or adjacent to such waters in any manner which may permit its being transported into the waters, is prohibited unless authorized by the San Diego Water Board.

8. Any discharge to a storm water conveyance system that is not composed entirely of storm water is prohibited unless authorized by the San Diego Water Board. [The federal regulations, 40 CFR 122.26(b)(13), define storm water as storm water runoff, snow melt runoff, and surface runoff and drainage. 40 CFR 122.26(b)(2) defines an illicit discharge as any discharge to a storm water conveyance system that is not composed entirely of storm water except discharges pursuant to an NPDES permit and discharges resulting from fire fighting activities.] [Section 122.26 amended at 56 FR 56553, November 5, 1991; 57 FR 11412, April 2, 1992].

9. The unauthorized discharge of treated or untreated sewage to waters of the State or to a storm water conveyance system is prohibited.

10. The discharge of industrial wastes to conventional septic tank/ subsurface disposal systems, except as authorized by the terms described in CWC section 13264, is prohibited.

11. The discharge of radioactive wastes amenable to alternative methods of disposal into the waters of the State is prohibited.

12. The discharge of any radiological, chemical, or biological warfare agent into waters of the State is prohibited.

13. The discharge of waste into a natural or excavated site below historic water levels is prohibited unless the discharge is authorized by the San Diego Water Board.

14. The discharge of sand, silt, clay, or other earthen materials from any activity, including land grading and construction, in quantities which cause deleterious bottom deposits, turbidity or discoloration in waters of the State or which unreasonably affect, or threaten to affect, beneficial uses of such waters is prohibited.

15. The discharge of treated or untreated sewage from vessels to Mission Bay, Oceanside Harbor, Dana Point Harbor, or other small boat harbors is prohibited.

16. The discharge of untreated sewage from vessels to San Diego Bay is prohibited.

17. The discharge of treated sewage from vessels to portions of San Diego Bay that are less than 30 feet deep at MLLW is prohibited.

18. The discharge of treated sewage from vessels, which do not have a properly functioning USCG certified Type 1 or Type II marine sanitation device, to portions of San Diego Bay that are greater than 30 feet deep at MLLW is prohibited.